GETtheMANUALS.org

VEL SATIS

0 General Information

01A SPECIFICATIONS

02A LIFTING

03A TOWING

04A LUBRICANTS

04B CONSUMABLES

05A OIL CHANGE AND ENGINE OIL REFILLING

07A ENGINE AND TRANSMISSION ASSEMBLY VALUES AND ADJUSTMENT

07B AXLE ASSEMBLIES VALUES AND ADJUSTMENT

BJ0F - BJ0G - BJ0J - BJ0K - BJ0V

77 11 311 002 **DECEMBER 2001** **EDITION ANGLAISE**

"The repair methods given by the manufacturer in this document are based on the technical specifications current when it was prepared.

The methods may be modified as a result of changes introduced by the manufacturer in the production of the various component units and accessories from which his vehicles are constructed."

All copyrights reserved by Renault.

Copying or translating, in part or in full, of this document or use of the service part reference numbering system is forbidden without the prior written authority of Renault.

© RENAULT 2001

GETtheMANUALS.org

General Information

Contents

Page

01A SPECIFICATIONS

Engine - Gearbox 01A-1
Vehicle identification 01A-2

02A LIFTING

Trolley jack - Axle stands 02A-1
Underbody lift 02A-2

03A TOWING

All types 03A-1

04A LUBRICANTS

Packaging 04A-1

04B CONSUMABLES

Packaging 04B-1

05A OIL CHANGE AND ENGINE OIL REFILLING

Engine 05A-1
Gearbox 05A-3
Power assisted steering 05A-4

Page

07A ENGINE AND TRANSMISSION ASSEMBLY VALUES AND ADJUSTMENT

Capacities - Grades 07A-1
Accessories belt tension 07A-2
Tightening the cylinder head 07A-6

07B AXLE ASSEMBLIES VALUES AND ADJUSTMENT

Wheels and tyres 07B-1
Brakes 07B-2
Underbody heights 07B-3
Front axle geometry checking values 07B-4
Rear axle geometry checking values 07B-5

GETtheMANUALS.org

Vehicle type	Engine		Gearbox type
	Type	Cubic capacity (cm^3)	
BJ0K	F4R	1998	PK6
BJ0E - BJ0F - BJ0G - BJ0M	G9T	2188	PK6 / SU1
BJ0J	P9X	2958	SU1
BJ0V	V4Y	3498	SU1

VEHICLE IDENTIFICATION

Example: BJ0K

B : Body type (five-door)

J : Project code

0K : Engine suffix

GETtheMANUALS.org

LOCATION OF VEHICLE IDENTIFICATION PLATE

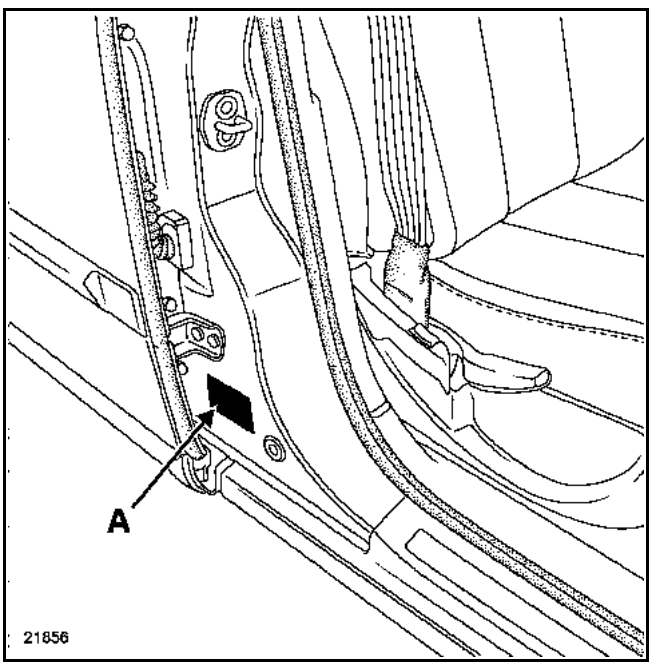

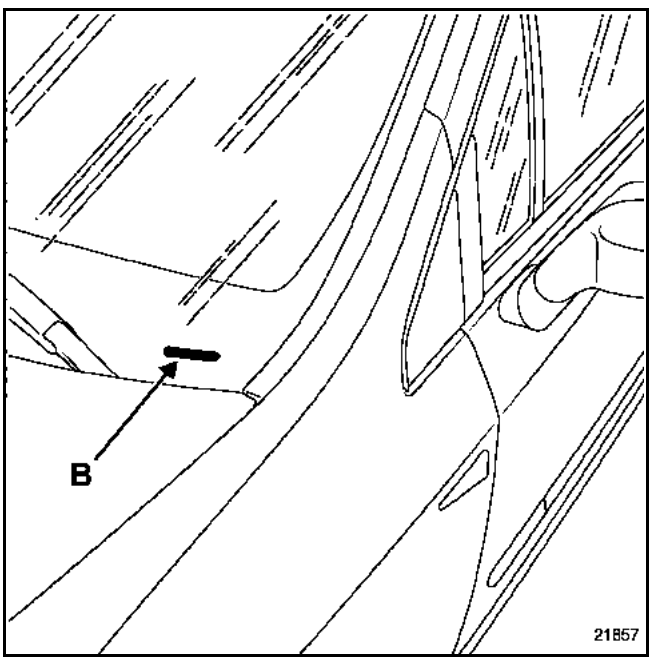

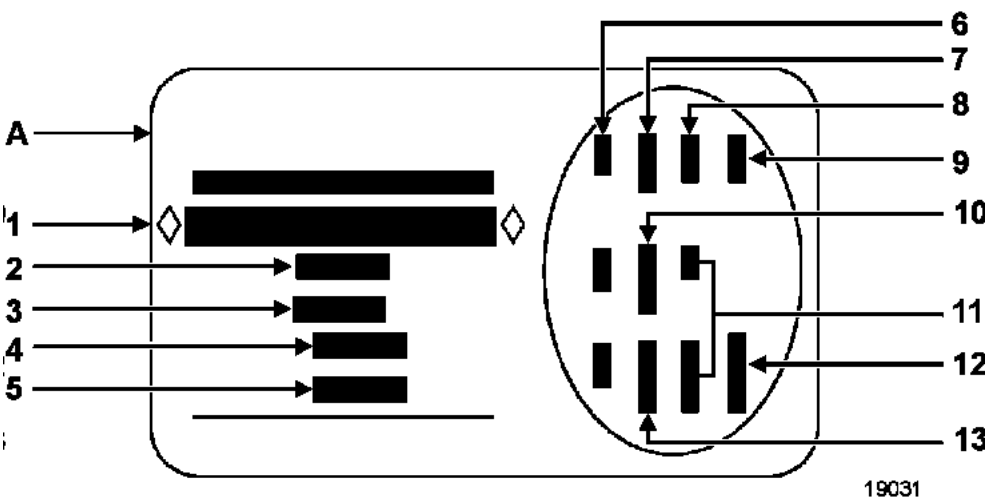

1 Vehicle type and type series number
This information is repeated on marking (B).
2 MGVW (Maximum Gross Vehicle Weight)
3 GTW (Gross Train Weight - loaded vehicle with trailer)
4 Front axle MGVW
5 Rear axle MGVW
6 Technical specifications of the vehicle
7 Vehicle paint reference
8 Equipment level
9 Vehicle type
10 Trim code
11 Additional equipment details
12 Fabrication number
13 Interior trim code

GETtheMANUALS.org

Safety symbol (special precautions to be taken when carrying out operations).

SPECIAL TOOLING REQUIRED	
Cha. 280-02	**Adaptor cup for trolley jack**

If a trolley jack is used, appropriate axle stands must always be used.

IMPORTANT:
The vehicle subframe is protected by products which guarantee against corrosion for 12 years.

Materials fitted with rubber pads should always be used to prevent any direct metal to metal contact which could damage the original corrosion protection.

The vehicle **must not** be raised by placing the jack beneath the front suspension arm or under the rear axle.

To lift a front or rear wheel, place the jack at (B) on the subframe underbody flange in alignment with marks (A).

To lift both the front and rear wheels laterally, use the cup **Cha. 280-02**.

Place the jack under the sill body flange at the centre point of the front door.

CAUTION:
Position the body flange correctly into the shim groove.

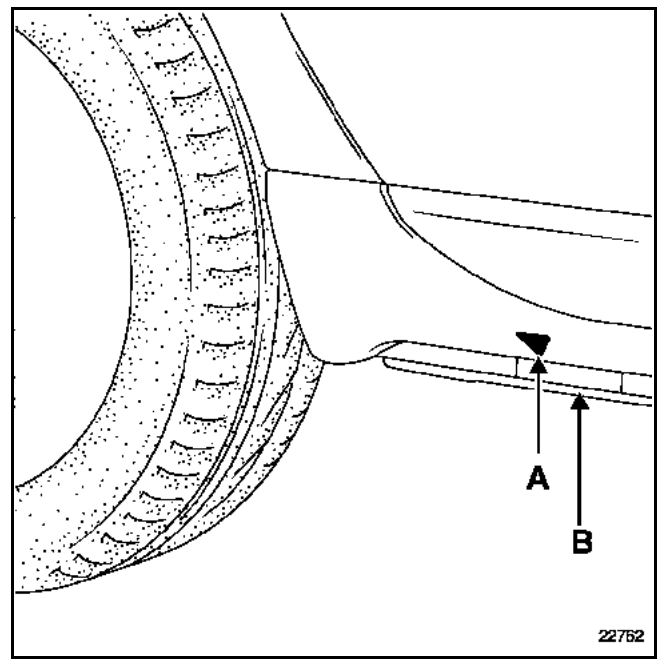

To move the vehicle onto axle stands, lift the entire vehicle laterally and position the axle stands under the body flange stiffeners provided for the tool kit trolley jack (B).

GETtheMANUALS.org

SAFETY NOTES

If heavy components need to be removed from the vehicle, it is preferable to use a four-post lift if possible.

In fact, after removing a large component (for example: engine and transmission assembly, rear axle, fuel tank, etc.), the vehicle has lost a large proportion of its load and there is a risk that it can become unstable on two-post lift supports (see the position of the arms further on).

This is even more dangerous when the vehicle is lifted to greater height

When the vehicle is lifted from underneath the body by a two-post lift it is necessary to fit safety straps which are available at **Parts Stores** part no.: **77 11 172 554**.

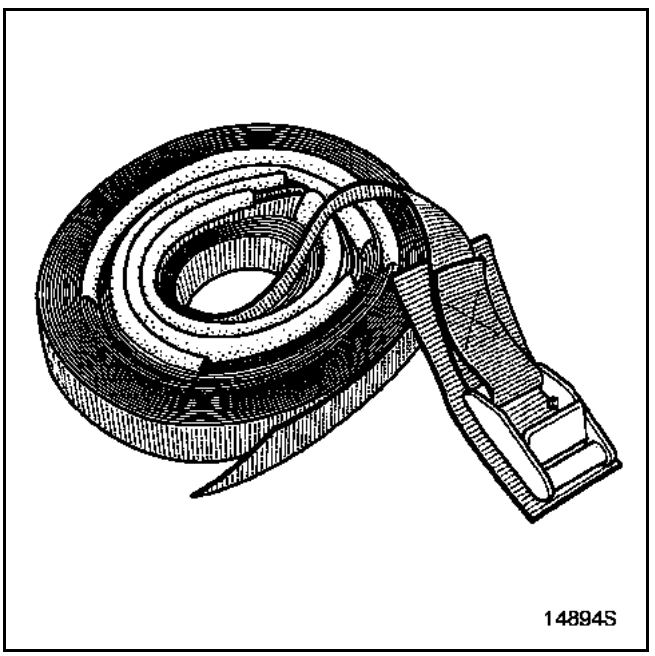

FITTING THE STRAPS

For obvious safety reasons, these straps should be kept in perfect condition (if they become frayed, replace them immediately).

When fitting the straps, check that the protectors are located on the seats and the fragile parts of the vehicle, do not overtighten the straps.

Place the straps under the post-lift arms and pass them around the vehicle.

The following example demonstrates the vehicle lashing for an operation on the front of the vehicle.

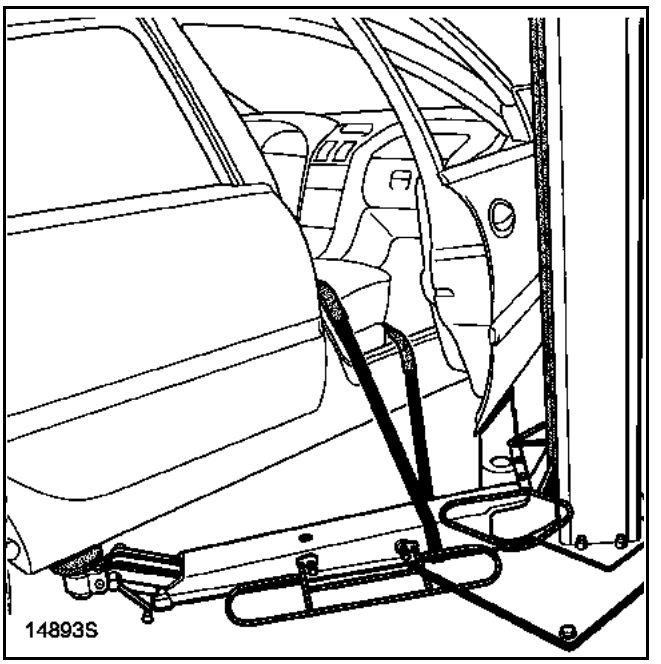

GETtheMANUALS.org

POSITIONING OF THE LIFTING ARMS

Position the lifting arm on the subframe underbody flange in alignment with the markings (A).

FRONT

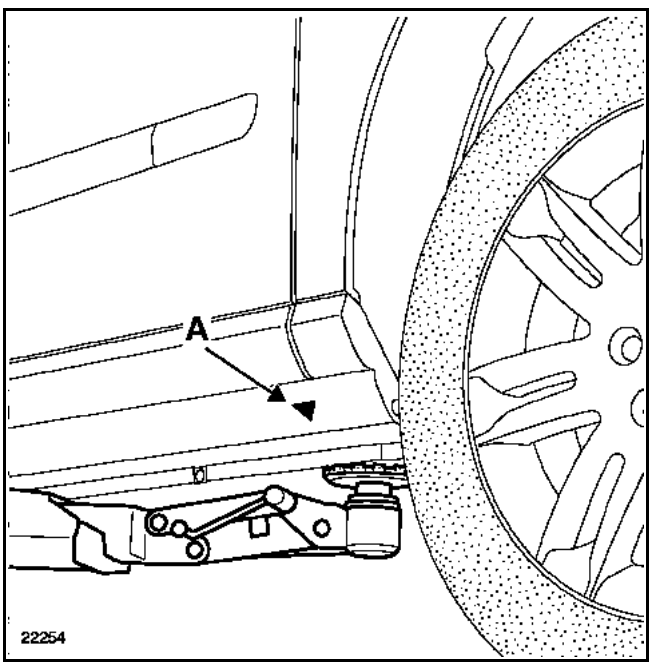

REAR

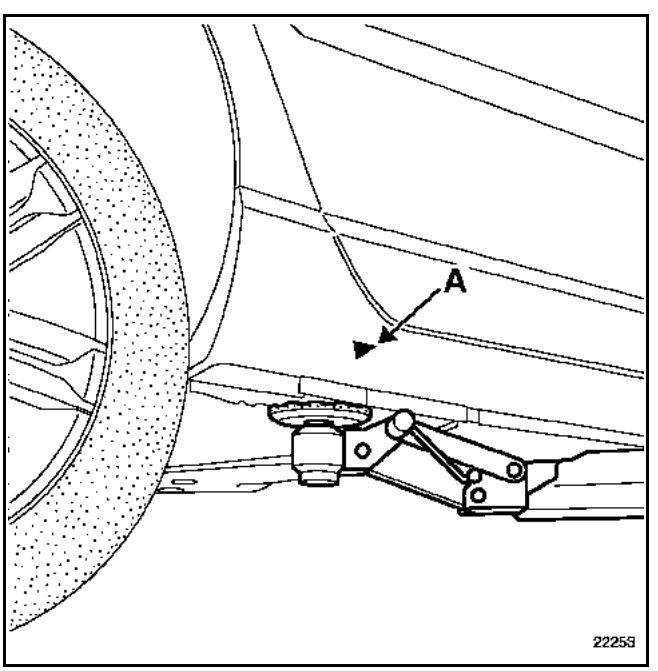

GETtheMANUALS.org

OBSERVE THE TOWING REQUIREMENTS OF THE COUNTRY YOU ARE IN.

NEVER USE THE DRIVESHAFTS AS AN ATTACHMENT POINT.

The towing points may only be used for towing the vehicle on the road. They should never be used for removing the vehicle from a ditch or to lift the vehicle, either directly or indirectly.

FRONT

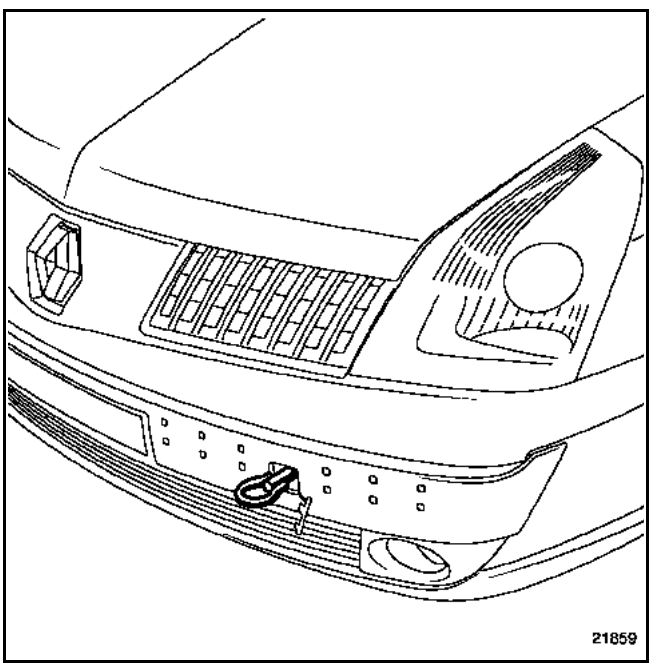

REAR

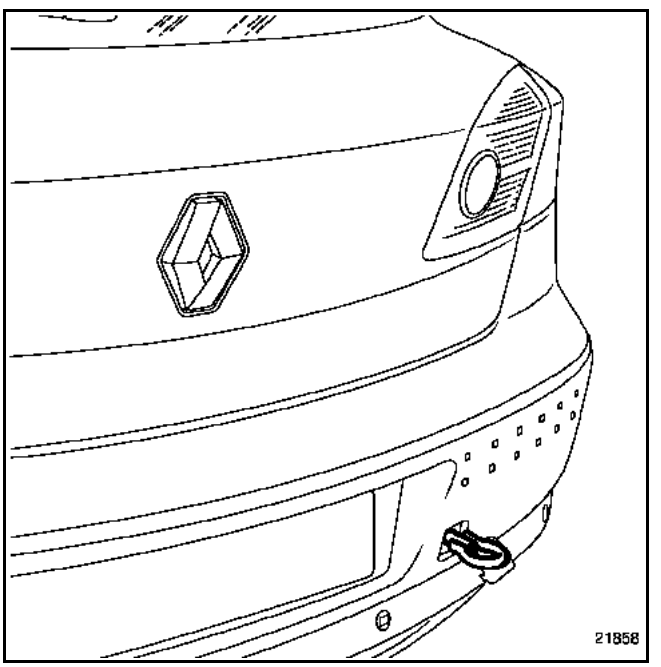

GETtheMANUALS.org

DESCRIPTION	PACKAGING	PART NUMBER
GREASES		
● **MOLYKOTE "BR2"** for main bearing journal faces, thrust pad guide tubes, clutch fork pads, lower suspension arm bearings, torsion bar splines, steering box and driveshaft splines.	1 kg tin	77 01 421 145
● **MOLYKOTE "33 Medium"** bushes, tubular rear axle, anti-roll bar bushes.	100 g tube	77 01 028 179
● **ANTI-SEIZE** (high temperature grease) Turbo, etc.	80 ml tube	77 01 422 307
● **"MOBIL CVJ" 825 Black Star or MOBIL EXF57C** for driveshaft seals.	180 g sachet	77 01 366 100
● **MULTIPURPOSE GREASE** wheel sensor.	Aerosol	77 01 422 308
MECHANICAL SEALANTS		
● **Mastic** for sealing exhaust pipe unions.	1.5 kg tin	77 01 421 161
● **RHODORSEAL 5661**	– Cartridge – 100 g tube	77 01 421 042 77 01 404 452
● **HARDENER KIT (RHODORSEAL 5661)** for side sealing of bearing caps.	Kit	77 01 421 080
● **AUTO blue seal** sealing paste.	100 g tube	77 01 396 227
VARNISHES		
● **"CIRCUIT PLUS"** varnish for repairing heated rear screens.	Bottle	77 01 421 135
BRAKES		
● Brake fluid	0.5 litre bottle DOT 4	77 11 172 381
● "Low viscosity" brake fluid.	0.5 litre bottle DOT 4	77 11 218 589

GETtheMANUALS.org

DESCRIPTION	PACKAGING	PART NUMBER
MECHANICAL SEALANTS		
● **AUTO grey seal** sealing paste.	100 g tubes	77 01 422 750
● **Loctite 518** for sealing the gearbox housing.	24 ml syringe	77 01 421 162
● **Leak detector.**	Aerosol	77 11 143 071
ADHESIVES		
● **"LOCTITE-FRENETANCH"** stops bolts loosening and allows them to be released.	24 cc bottle	77 01 394 070
● **"LOCTITE-FRENBLOC"** locks bolts.	24 cc bottle	77 01 394 071
● **"LOCTITE SCELBLOC"** for bonding bearings.	24 cc bottle	77 01 394 072
LUBRICANT CLEANING AGENTS		
● **"NETELEC"** unseizing agent, lubricant.	Aerosol	77 11 171 287
● Carburettor cleaner.	300 ml aerosol	77 11 171 437
● Injector cleaner	355 ml can	77 01 423 189
● Super-concentrated unseizing agent.	500 ml aerosol	77 01 408 466
● **"DECAPJOINT" (FRAMET)** for cleaning the gasket faces of aluminium cylinder heads.	Aerosol	77 01 405 952
● Brake cleaner.	400 ml aerosol	77 11 171 911

GETtheMANUALS.org

TOOLING REQUIRED
Engine drain plug spanner

DRAINING: plug (1)

FILLING: plug (2)

F4R ENGINE

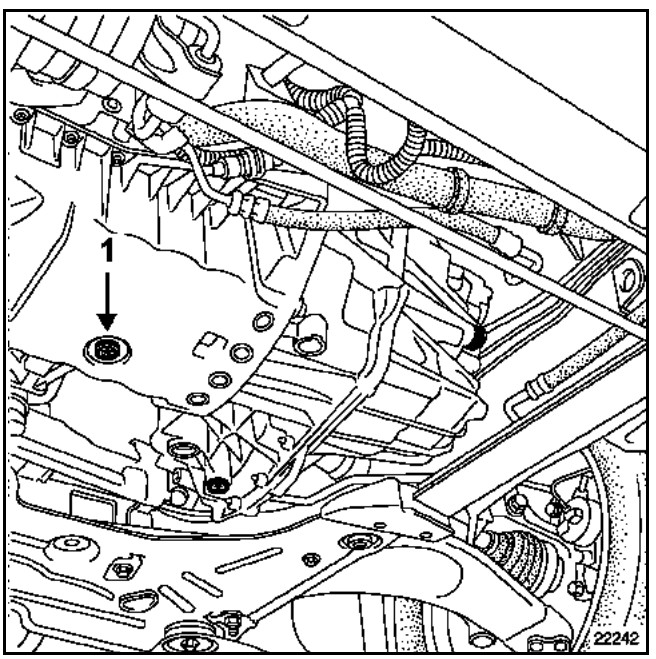

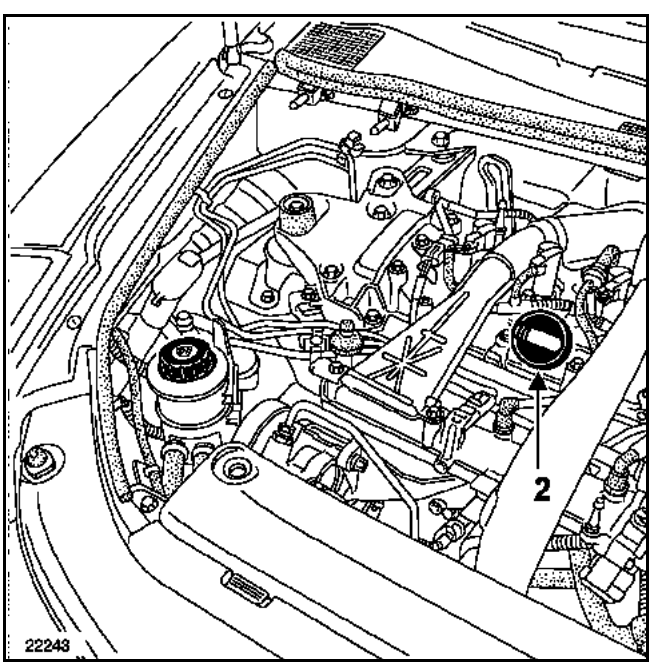

G9T ENGINE

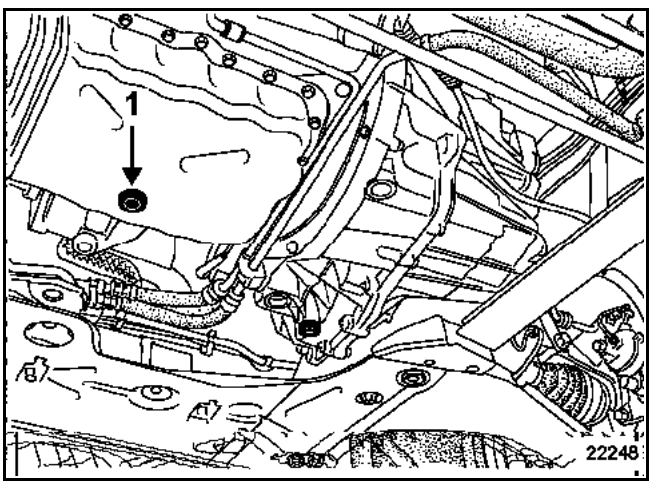

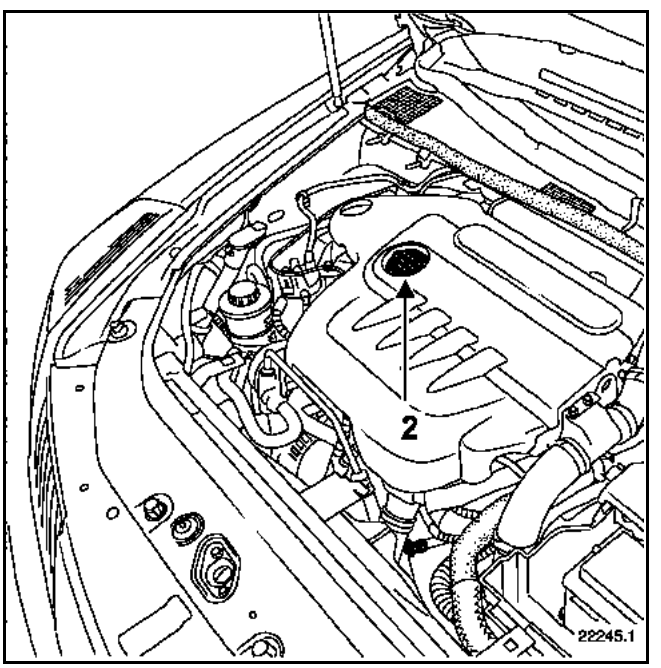

GETtheMANUALS.org

DRAINING: plug (1)

FILLING: plug (2)

P9X ENGINE

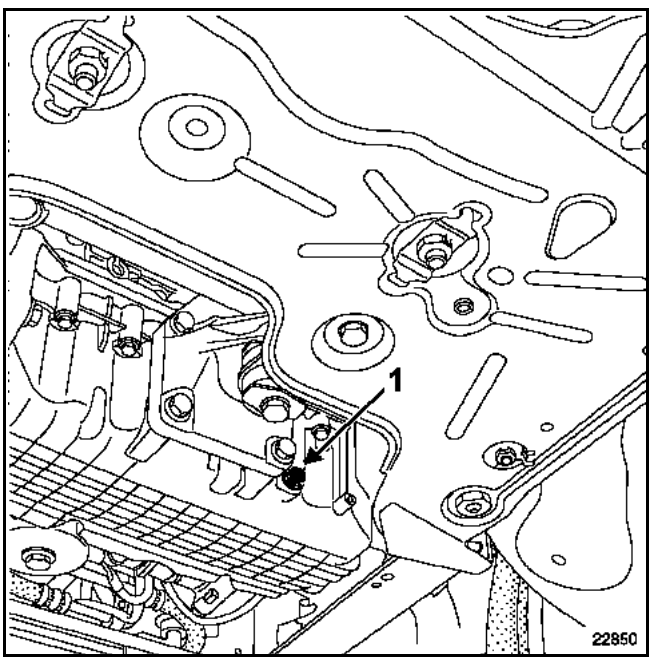

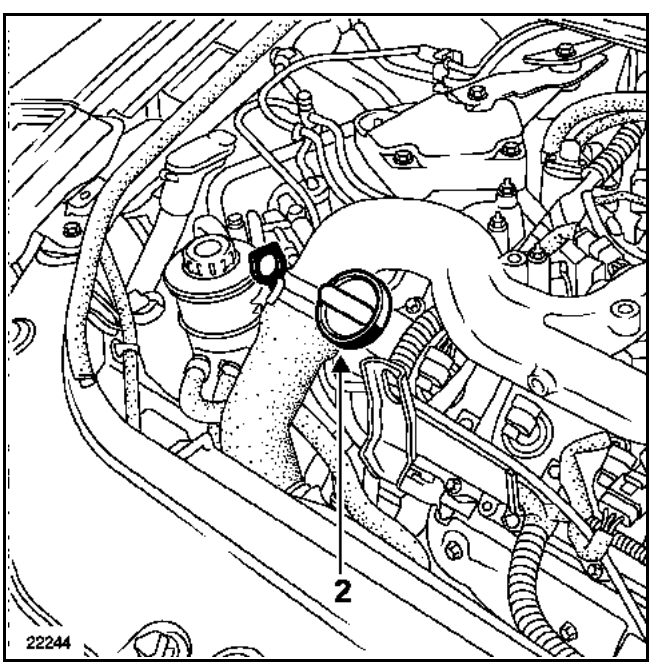

V4Y ENGINE

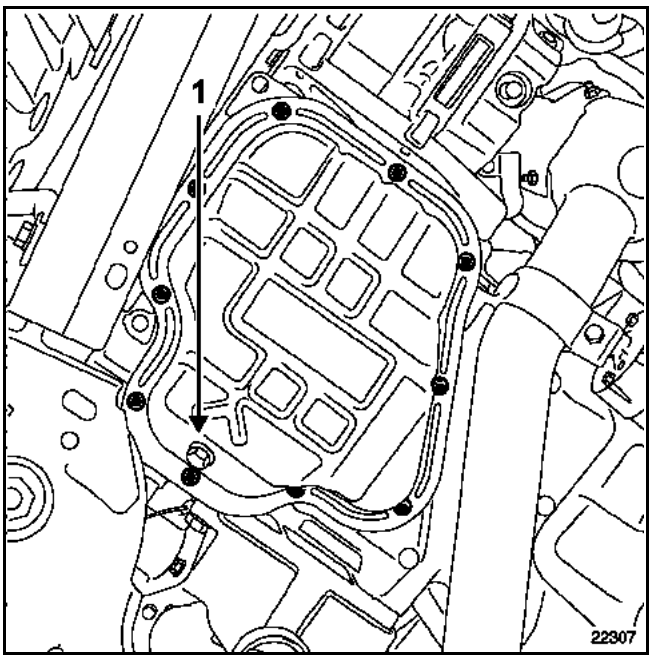

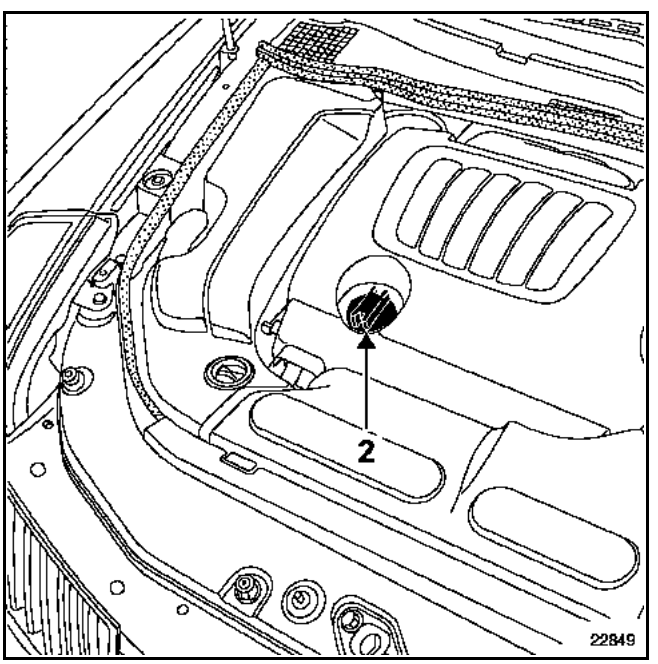

GETtheMANUALS.org

DRAINING: plug (1)

FILLING and LEVEL: cap (2)

F4R and G9T ENGINES

Manual gearbox

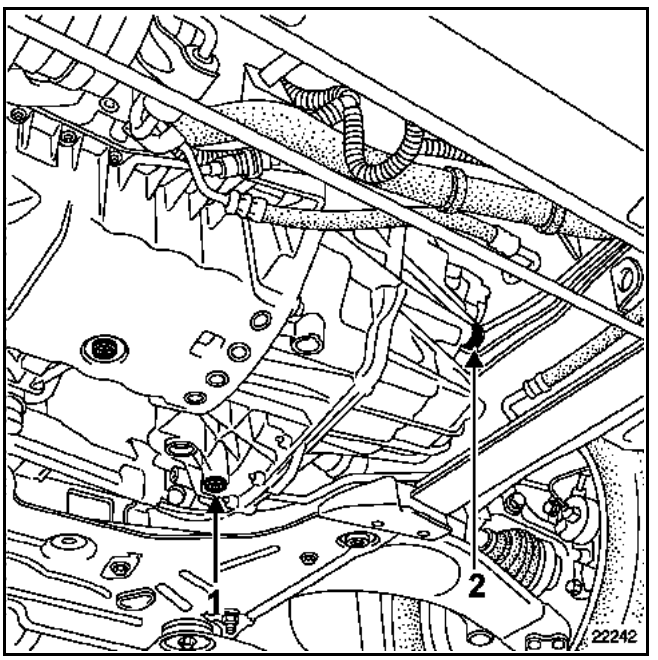

G9T, P9X and V4Y ENGINES

Automatic gearbox

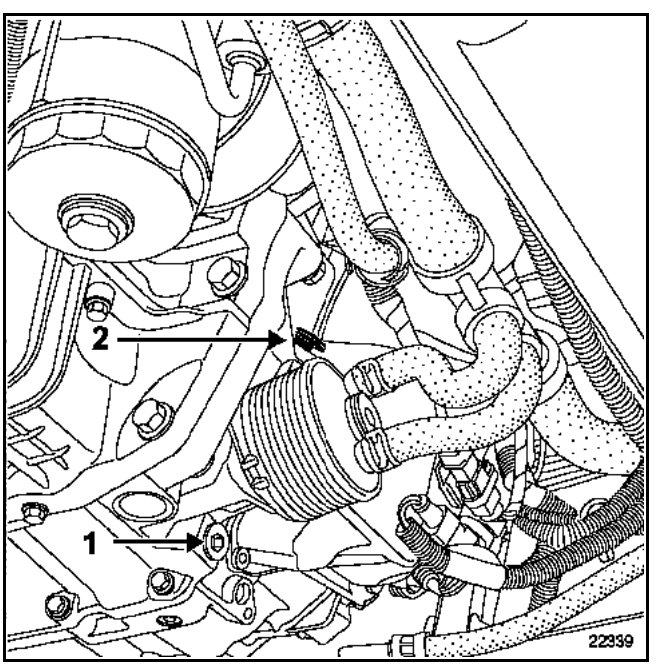

GETtheMANUALS.org

CHECKING THE LEVEL

POWER ASSISTED STEERING PUMP LEVEL

For topping up or filling, use **ELF RENAULTMATIC D2** or **MOBIL ATF 220** oil.

The level, when correct, should be visible between the **MIN** and **MAX** marks on the reservoir (1).

ENGINES OF ALL TYPES

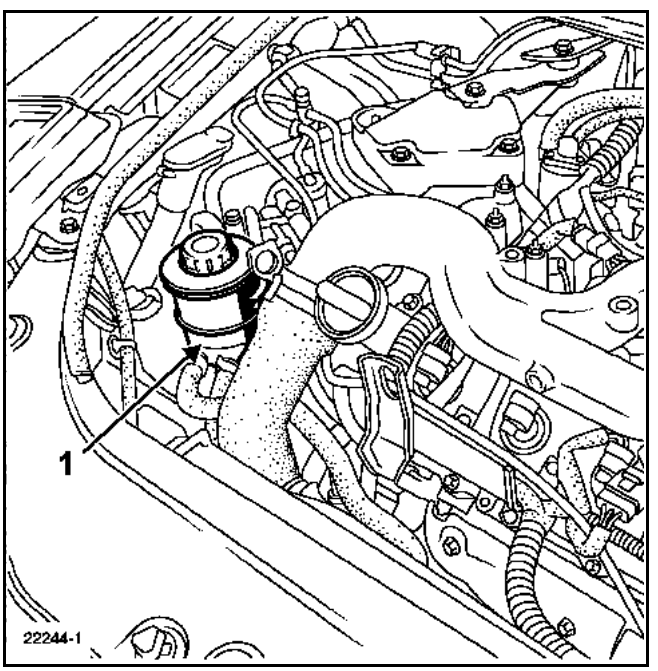

GETtheMANUALS.org

Components	Average capacity* in litres	
	After an oil change, check using the dipstick	After replacing the oil filter
Diesel engine (oil)		
G9T	5.6	6.3
P9X	6.5	7.3
Petrol engine (oil)		
F4R	5	5.2
V4Y	4.75	4.8
Manual gearbox		
PK6	2.2	
Automatic gearbox		
SU1	7.6	

* Check with dipstick.

NOTE: never exceed the maximum mark on the dipstick.

Components	Capacity in litres	Grade
Brake circuit	Standard: 0.7 ABS: 1	SAE J 1703 and DOT 4 (low viscosity when cold)

Brake fluids must be approved by the Technical Department.

Components	Capacity in litres	Grade
Fuel tank	Approximately 80	Unleaded petrol Diesel
Power assisted steering	Separate reservoir 1.1	ELF RENAULT MATIC D2 or MOBIL ATF 220
Coolant circuit F4R G9T P9X V4Y	 6.8 7 7 7.4	GLACEOL RX (type D) add only coolant

GETtheMANUALS.org

REMOVAL

Put the vehicle on a two-post lift.

Disconnect the battery.

Remove:
– the engine covers,
– the front right wheel,
– the side protection.

To remove the belt, pivot the automatic belt tensioner in the direction shown below using a **16 mm angled ring spanner**.

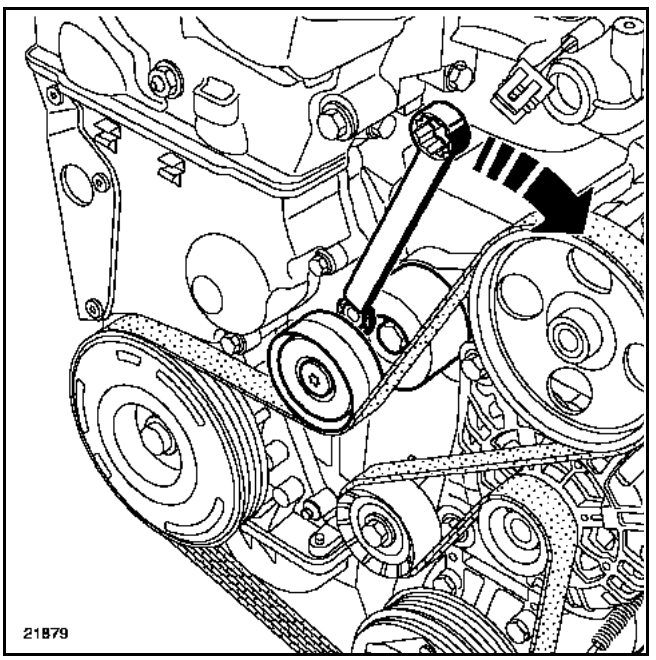

Remove the accessories belt.

REFITTING

NOTE: never refit a belt once it has been removed, but replace it.

Refitting is the reverse of removal.

Connect the battery and carry out the necessary programming.

GETtheMANUALS.org

REMOVAL

Put the vehicle on a two-post lift.

Disconnect the battery.

Remove:
– the engine covers,
– the front right wheel,
– the side protection.

Special notes for removing the accessories belt

Pivot the auto tensioner **to the left** using a spanner to loosen the belt. Lock the tension wheel by putting a **4 mm** Allen key in the hole (1).

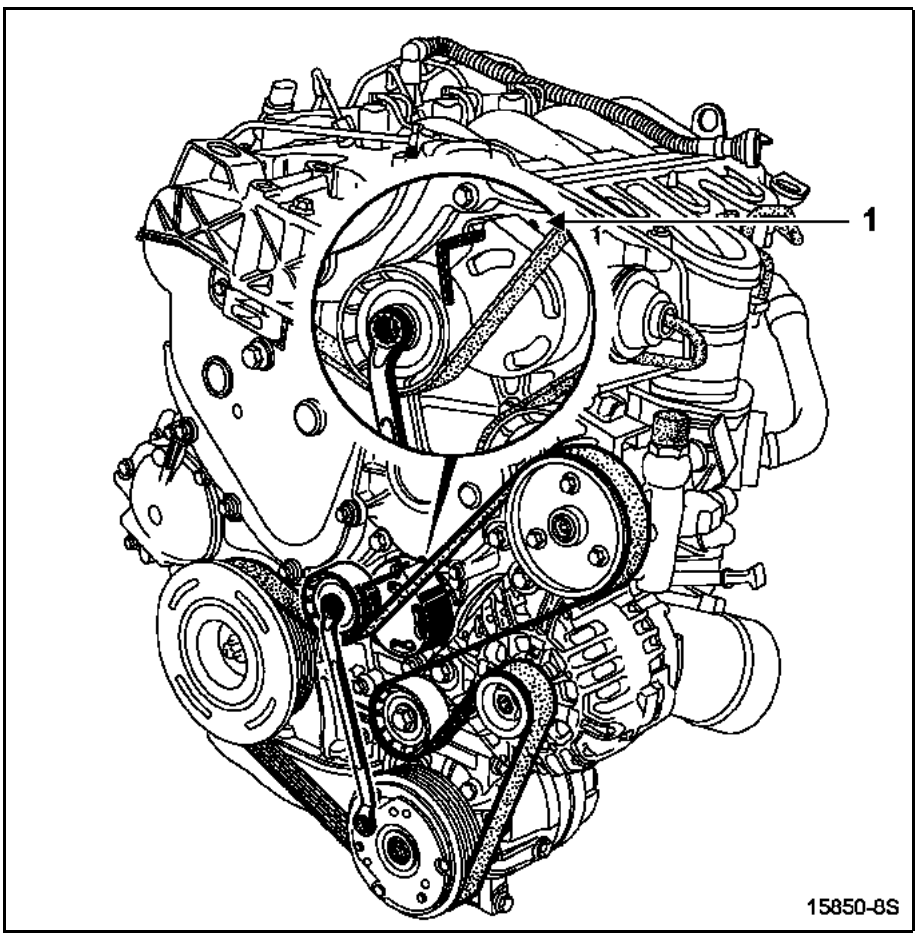

REFITTING

NOTE: never refit a belt once it has been removed, but replace it.

Refitting is the reverse of removal.

Connect the battery and carry out the necessary programming.

GETtheMANUALS.org

REMOVAL

Put the vehicle on a two-post lift.

Disconnect the battery.

Remove:
– the engine covers,
– the front right wheel,
– the side protection.

Special notes for removing the accessories belt

Swivel the auto tensioner as indicated below using a **19 mm** offset wrench to loosen the belt.

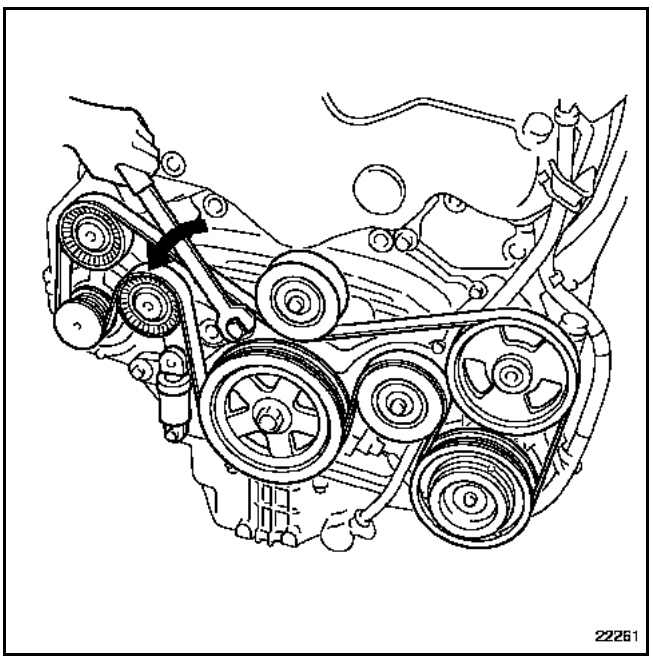

Remove the belt.

REFITTING

NOTE: never refit a belt once it has been removed, but replace it.

Refitting is the reverse of removal.

Tighten the tension wheel bolts to a torque of **2.5 daNm.**

Tighten the tension wheel bolts to a torque of **5.8 daNm.**

Connect the battery and carry out the necessary programming.

Accessories belt tensioning

GETtheMANUALS.org

SPECIAL TOOLING REQUIRED	
Mot. 1505	**Belt tension measuring tool**

REMOVAL

Put the vehicle on a two-post lift.

Remove the engine covers.

Disconnect the battery.

Remove:
– the front right wheel,
– the side protection.

→ **tension checking point**

Components	Power assisted steering pump belt,	Air conditioning compressor and alternator belt,
Fitting tension (Hz)	**234 ± 8**	**260 ± 8**

Power assisted steering pump belt,

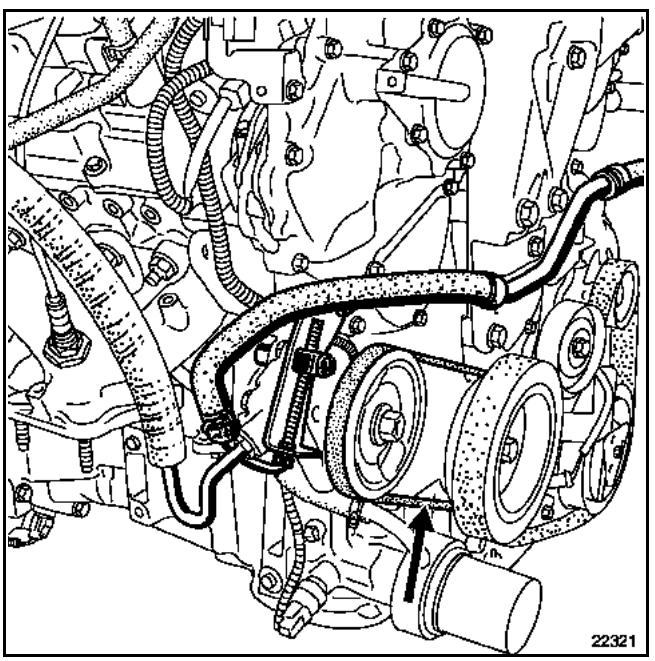

Air conditioning compressor and alternator belt,

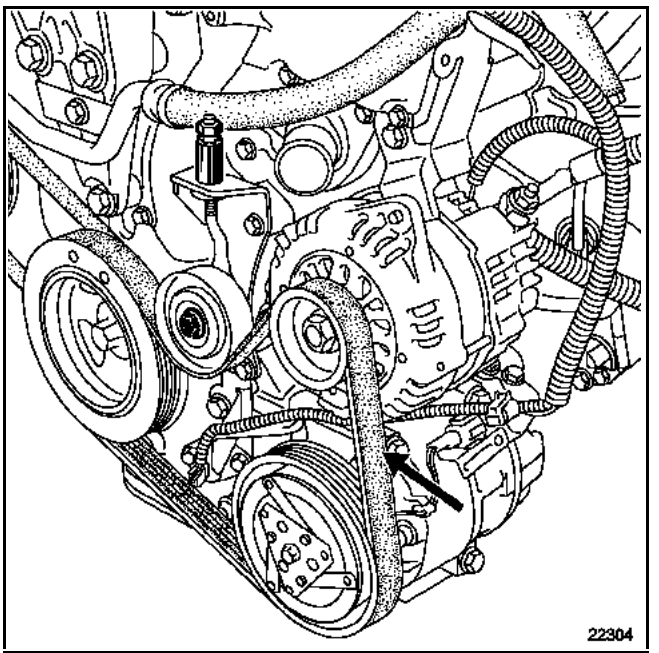

REFITTING

NOTE: always replace a belt after it has been removed.

Proceed in the reverse order to removal.

Connect the battery and carry out the necessary programming.

GETtheMANUALS.org

CYLINDER HEAD

The bolts can be reused if the length under the head does not exceed **117.5 mm** (otherwise replace all the bolts).

Cylinder head tightening procedure

REMINDER: Use a syringe to remove any oil which may have entered the cylinder head mounting bolt holes to achieve correct tightening of the bolts.

Do not oil the new bolts. However, the bolts must be oiled if they are being reused.

Tighten all the bolts to **2 daNm** in the order recommended below.

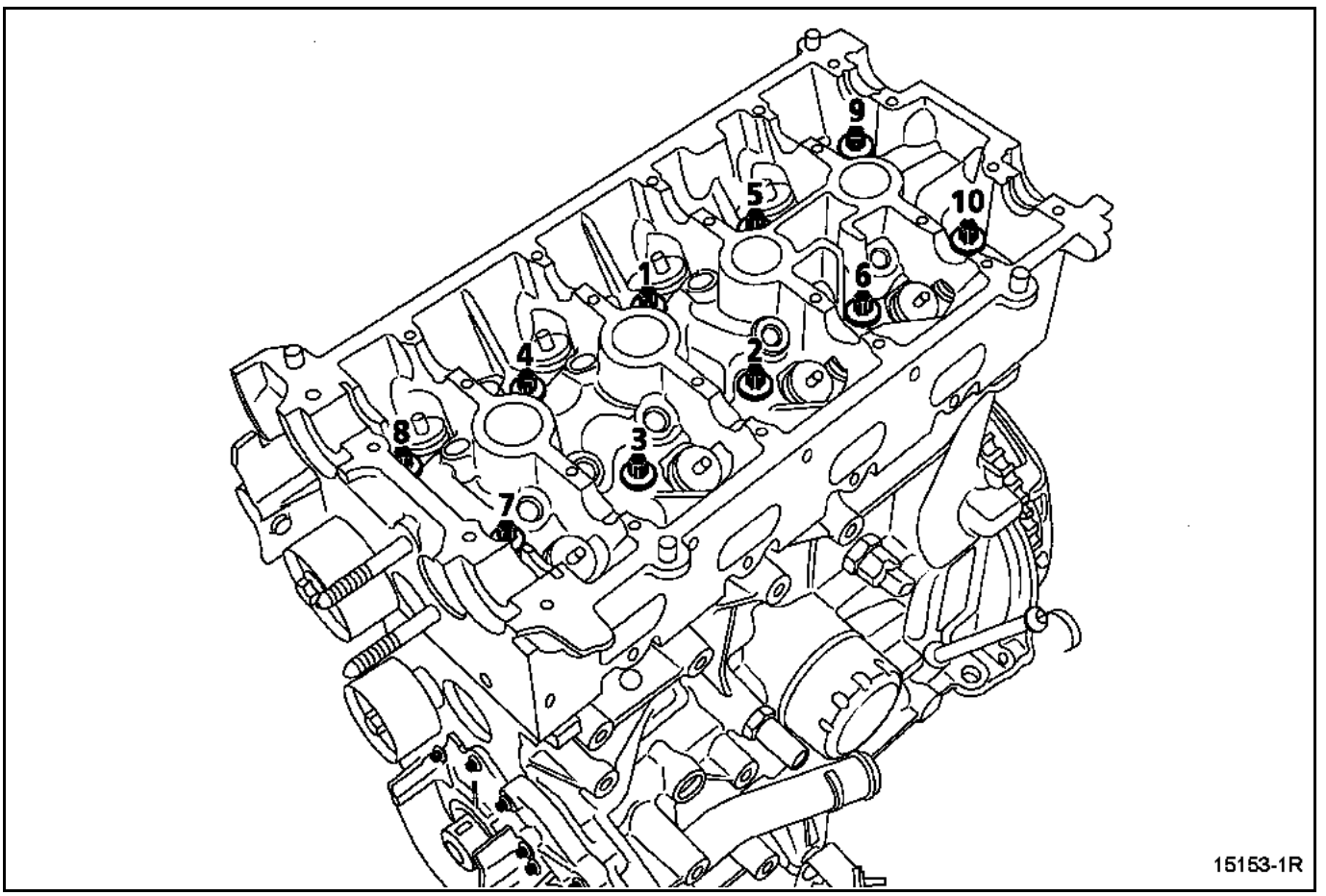

Check that all the bolts are correctly tightened to **2 daNm** then, bolt by bolt, tighten to an angle of **165° ± 6°**.

Do not retighten the cylinder head bolts after applying this procedure.

GETtheMANUALS.org

CYLINDER HEAD

The bolts must be replaced systematically.

Cylinder head tightening procedure

REMINDER: Use a syringe to remove any oil which may have entered the cylinder head mounting bolt holes to achieve correct tightening of the bolts.

Do not oil the new bolts.

Tighten all the bolts to **3 daNm** in the order recommended below.

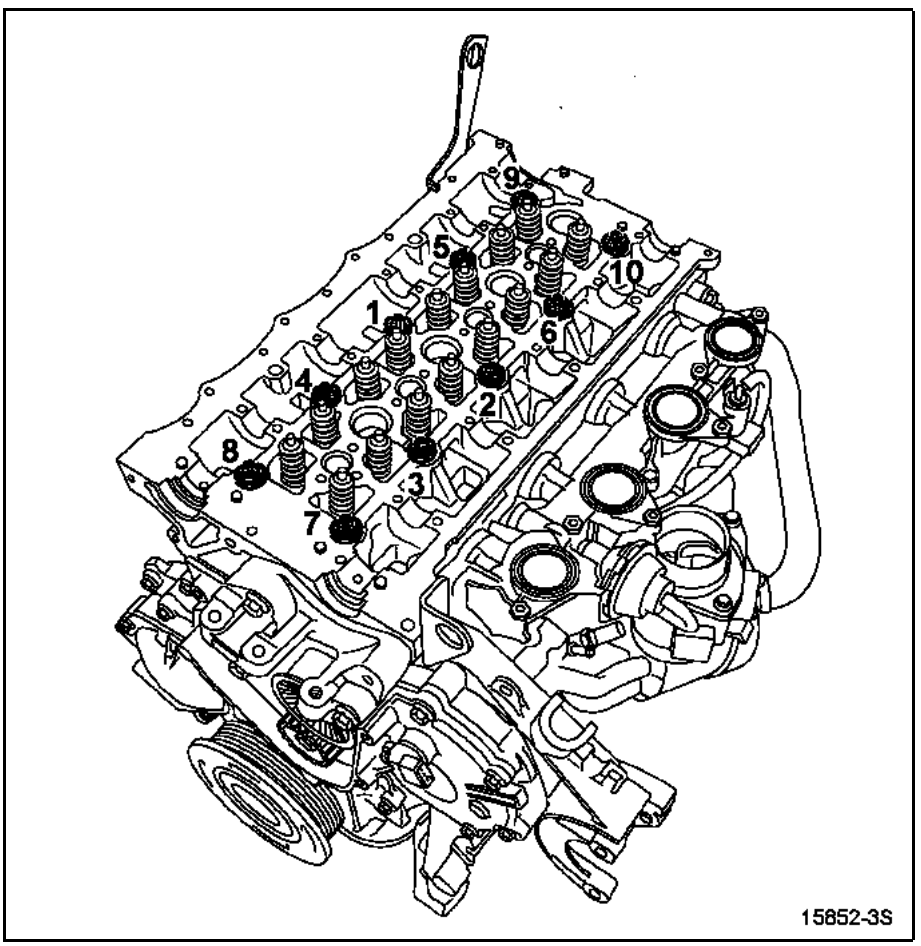

Check that all the bolts are tightened to **3 daNm** then, bolt by bolt, tighten to an angle of **300° ± 6°.**

Do not retighten the cylinder head bolts after applying this procedure.

GETtheMANUALS.org

CYLINDER HEAD

The bolts must always be replaced.

Cylinder head tightening procedure

REMINDER: Use a syringe to remove any oil which may have entered the cylinder head mounting bolt holes to achieve correct tightening of the bolts.

First stage:
– Tighten all the bolts to **3.9 daNm** in the order recommended below.

Second stage:
– bolts numbered **1** to **4**: angle-tighten to **130°**
– bolts numbered **5** to **8**: angle-tighten to **110°**

Third stage:
– bolts numbered **1** to **4**: angle-tighten to **130°**
– bolts numbered **5** to **8**: angle-tighten to **110°**

A: inlet side

B: exhaust side

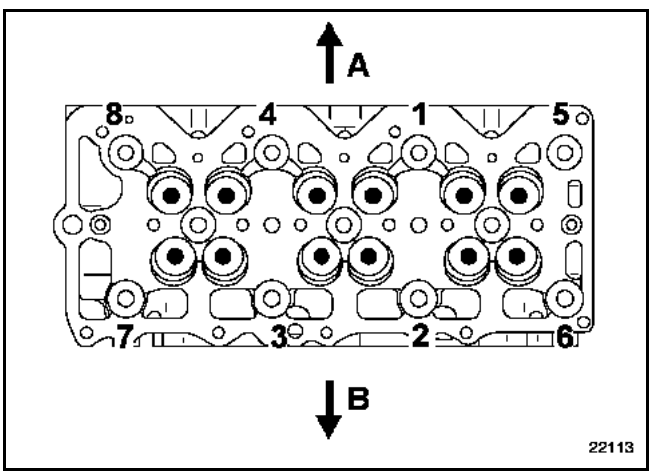

Do not retighten the cylinder head after carrying out this procedure.

Tightening the cylinder head

GETtheMANUALS.org

Cylinder head tightening procedure

The bolts can be reused if the difference between D1 and D2 (shown by the dimensions X1 and X2) is less than or equal to **0.11 mm**.

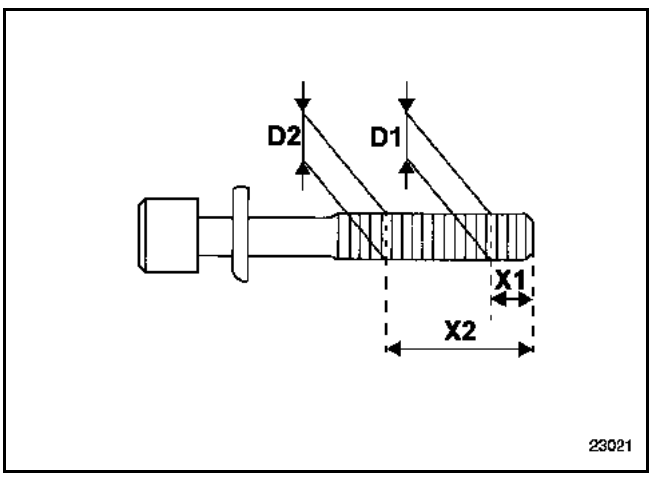

X1: 11 mm
X2: 48 mm

REMINDER: to achieve correct tightening of the bolts, use a syringe to remove any oil which may have entered the cylinder head mounting holes.

Do not oil the new bolts. However, the bolts must be oiled if they are being reused.

Tighten all the bolts to **10 daNm** in the order recommended below.

Front cylinder head

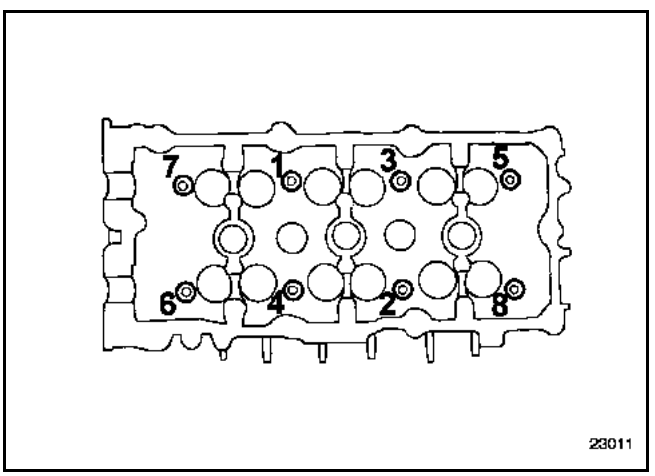

Rear cylinder head

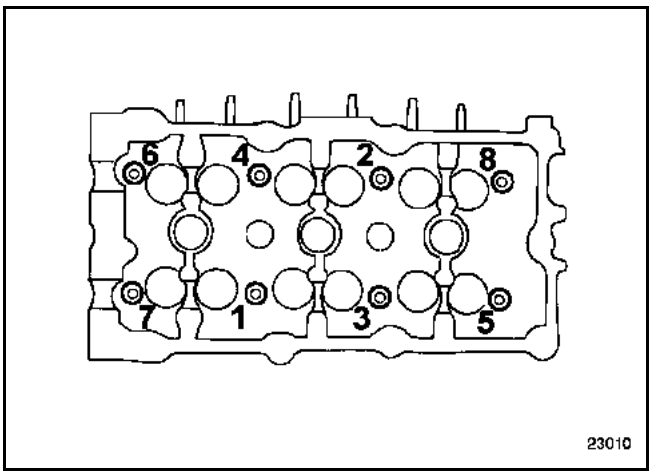

Loosen the bolts.

Tighten to **4 daNm**.

First angle-tighten to **95°**.

Then angle-tighten to **95°**.

Do not retighten the cylinder head bolts after performing this procedure.

GETtheMANUALS.org

Engine	Rim	Tyres	Tyre pressure when cold (in bar) (1)	
			Front	Rear
F4R	7 J 17	225/55 R 17	2.2	2.0
	7.5 J 18	245/45 R 18	2.2	
V4Y	7 J 17	225/55 R 17	2.5	
	7.5 J 18	245/45 R 18	2.6	
G9T	7 J 17	225/55 R 17	2.3	
	7.5 J 18	245/45 R 18	2.4	
P9X	7 J 17	225/55 R 17	2.4	
	7.5 J 18	245/45 R 18	2.5	

(1) Under full load and/or on motorway.

Wheel bolt tightening torque: **11 daNm.**

Rim run-out: **0.8 mm**

Tyre pressures must be checked when cold. The increase in temperature during driving increases the pressure by **0.2 to 0.3 bar**.

If the pressure is checked when warm, take into account this increase in pressure and **never deflate the tyres**.

Special features of vehicles fitted with the tyre pressure monitor

Each set of four tyres is programmed by computer.

When the winter tyres or wheels are being fitted, and the programming has already been carried out, you only need to change to winter mode using the diagnostic tool. Similarly, when the summer tyres or wheels are being fitted, you need to change to summer mode using the diagnostic tool.

GETtheMANUALS.org

Vehicle type	Disc thickness (in mm)		Disc thickness (in mm)		Maximum disc run-out (in mm)
	Front		Rear		
	Normal	Minimum	Standard	Minimum	
ALL TYPES	28	25.4	11	9.5	0.2

Vehicle type	Brake pad thickness (in mm) (including mounting)				Brake fluid
	Front		Rear		
	New	Minimum	New	Minimum	
ALL TYPES	17.5	8	16.6	8	SAE J 1703 DOT 4 (1)

(1) For optimal performance of vehicles equipped with the electronic stability program, RENAULT recommends a brake fluid with low viscosity in cold conditions (maximum **750 mm^2/s at - 40 °C**).

GETtheMANUALS.org

MEASUREMENT POINTS

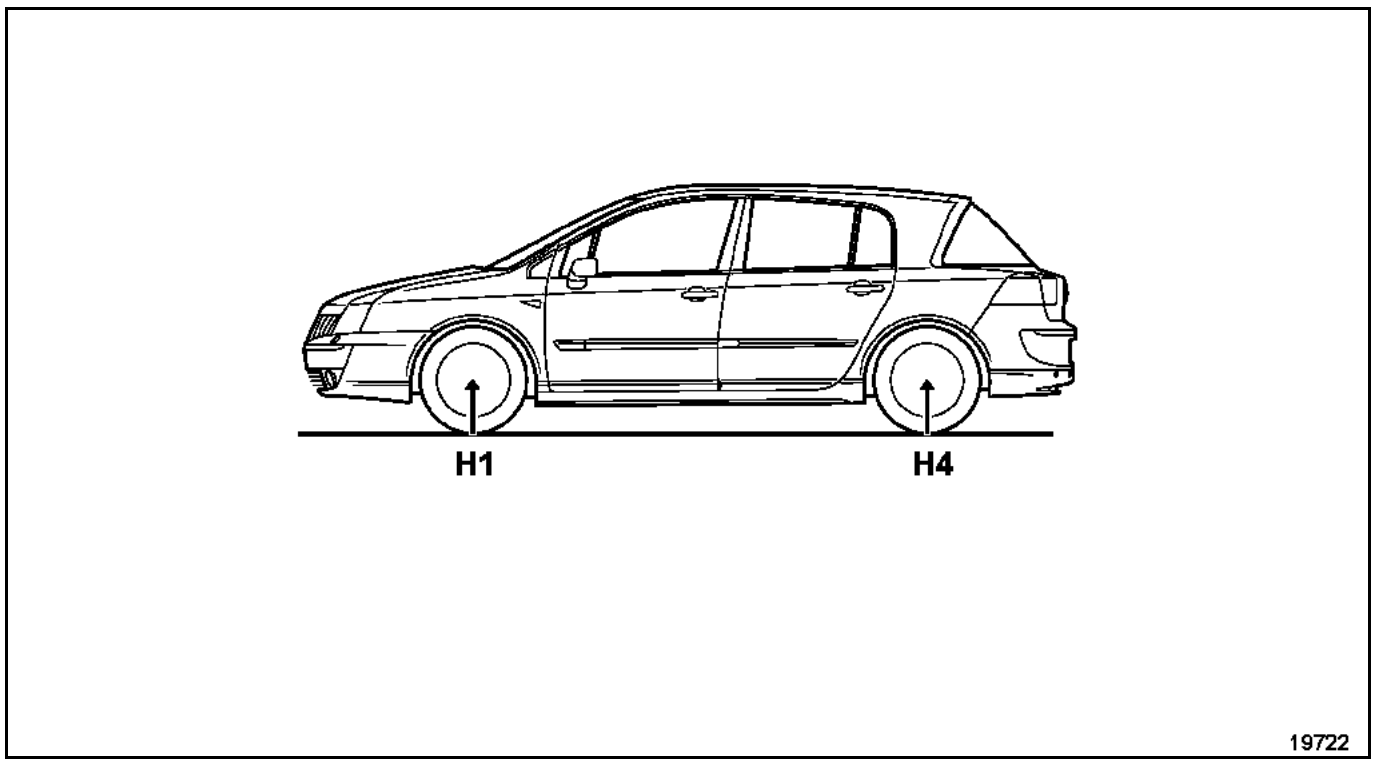

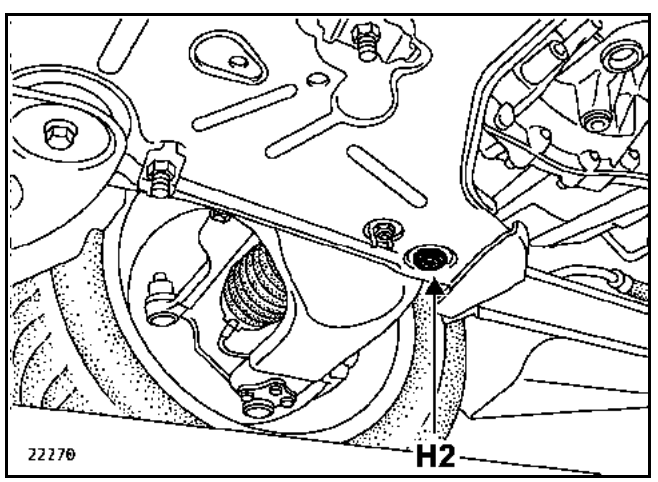

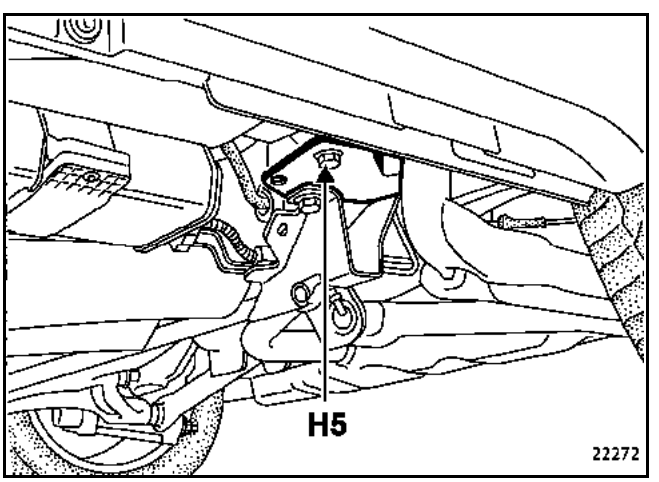

Dimensions H1 and H4 are measured between the floor and the wheel centrelines.
Dimension H2 is measured between the floor and the lower face of the front securing nut on the lower arm.
Dimension H5 is measured between the floor and the head of the longitudinal arm bearing screw furthest from the wheel.

GETtheMANUALS.org

Tyres: 225/55 R 17 or 245/45 R 18

ANGLES	VALUES	POSITION OF FRONT AXLE (mm)	ADJUSTING
CASTOR 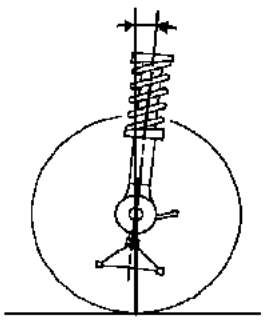 93012-1S	3°51' 4°07' 4°23' 4°39' 4°55' } ± 30' Max. right/left variance = 1º	H5 - H2 = 99 H5 - H2 = 90 H5 - H2 = 82 H5 - H2 = 74 H5 - H2 = 66	Not adjustable
CAMBER 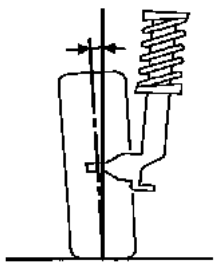 93013-1S	-0°01' -0°05' -0°09' -0°13' -0°17' } ± 30' Max. right/left variance = 1º	H1 - H2 = 133 H1 - H2 = 141 H1 - H2 = 148 H1 - H2 = 155 H1 - H2 = 163	Not adjustable
PIVOT 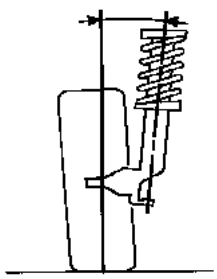 93014-1S	11°48' 11°59' 12°10' 12°20' 12°31' } ± 30' Max. right/left variance = 1º	H1 - H2 = 133 H1 - H2 = 141 H1 - H2 = 148 H1 - H2 = 155 H1 - H2 = 163	Not adjustable
WHEEL ALIGNMENT 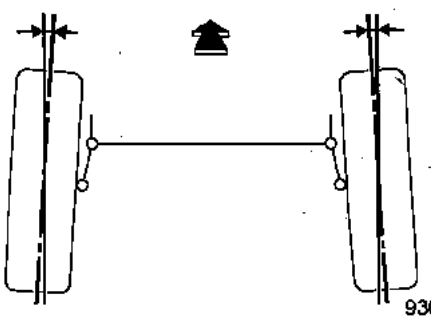 93011-1S	(For two wheels) Locking -0°10' ± 10' 17 inch rim - 1.3 mm ± 1.3 mm 18 inch rim - 1.4 mm ± 1.4 mm	Unladen or H1 - H2 = 133	Adjusted by rotating the track rod sleeves
POSITION FOR TIGHTENING RUBBER BUSHES 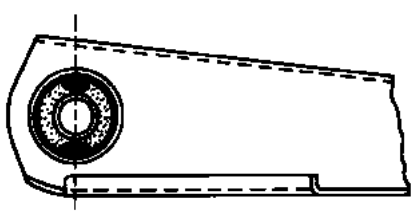 81603S1	-	Unladen	-

GETtheMANUALS.org

ANGLES	VALUES	POSITION OF REAR AXLE (mm)	ADJUSTMENT
CAMBER 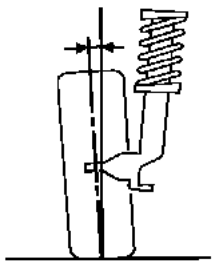 93013-2S	-0°50' ± 30'	Unladen or H4 - H5 = 45	Adjustment by rotating the eccentric (upper stub-axle carrier mounting) Refer to Section **33A**.
WHEEL ALIGNMENT 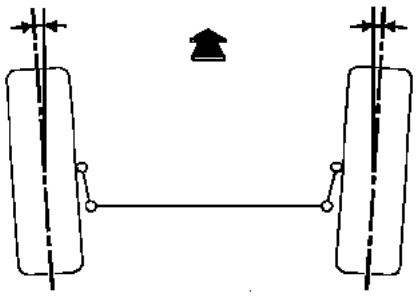 93011-2S	(For two wheels) Closing -0°20' ± 10' 17 inch rim -2.6 mm ± 1.4 mm 18 inch rim -2.7 mm ± 1.4 mm	Unladen or H4 - H5 = 45	Adjustment by moving the longitudinal arm bearings. Refer to Section **33A**.
POSITION FOR TIGHTENING RUBBER BUSHES 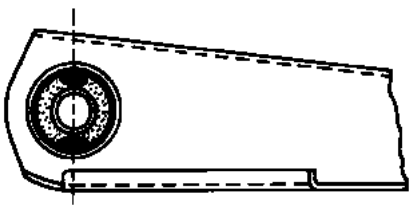 81603S1	-	Unladen	-

GETtheMANUALS.org

VEL SATIS

1 Engine and peripherals

10A ENGINE AND PERIPHERALS

11A TOP AND FRONT OF ENGINE

12A FUEL MIXTURE

12B TURBOCHARGING

13A FUEL SUPPLY

13B DIESEL INJECTION

13C PREHEATING

14A ANTIPOLLUTION

16A STARTING-CHARGING

17A IGNITION

17B PETROL INJECTION

19A COOLING SYSTEM

19B EXHAUST SYSTEM

19C FUEL TANK

19D ENGINE MOUNTING

BJ0E - BJ0J - BJ0K - BJ0M - BJ0P - BJ0V

77 11 311 022 **Edition 2 - DECEMBER 2001** **Edition Anglaise**

"The repair procedures given by the manufacturer in this document are based on the technical specifications current when it was prepared.

The methods may be modified as a result of changes introduced by the manufacturer in the production of the various component units and accessories from which his vehicles are constructed."

All copyrights reserved by Renault.

Copying or translating, in part or in full, of this document or use of the service part reference numbering system is forbidden without the prior written authority of Renault.

© RENAULT 2001

GETtheMANUALS.org

Engine and peripherals

Contents

	Page
10A ENGINE AND PERIPHERALS	
Identification	10A-1
Oil consumption	10A-2
Oil pressure	10A-3
Engine and gearbox	10A-4
Sump	10A-13
Oil pump	10A-19
OIl exchanger	10A-22
Oil level sensor	10A-24
Oil filter	10A-25
11A TOP AND FRONT OF ENGINE	
Timing belt	11A-1
Timing chain	11A-34
Cylinder head gasket	11A-35
Camshaft	11A-72
12A FUEL MIXTURE	
Specifications	12A-1
Air intake	12A-7
Air filter	12A-11
Motorised throttle valve	12A-14
Air vent casing	12A-19
Engine stop system	12A-20
Turbocharged F4R engine	
Inlet manifold	12A-24
V4Y engine	
Variable admission	12A-27
Intake manifold	12A-28
Intake distributor	12A-30
Intake manifold and distributor	12A-32
G9T engine	
Intake manifold	12A-34
Intake distributor	12A-38
Intake distibutor - Swirl flap	12A-39
P9X engine	
Intake distributor	12A-40
Intake manifolds	12A-43
Exhaust manifold	12A-47
V4Y engine	
Front exhaust manifold	12A-48
Rear exhaust manifold	12A-49
G9T engine	
Exhaust manifold	12A-50
P9X engine	
Front row exhaust manifold	12A-52
Rear row exhaust manifold	12A-55
Intermediate exhaust pipes	12A-57
Intermediate exhaust pipes and manifolds	12A-60
Exhaust gas recirculation valve - Exchanger	12A-61
12B TURBOCHARGING	
Pressure regulation valve	12B-1
Anti-surge valve	12B-2
Pressure regulation valve	12B-3
Pressure regulation	12B-4
Turbocompresseur	12B-6
Intercooler	12B-19
13A FUEL SUPPLY	
Petrol supply circuit	13A-1
Diesel fuel system	13A-3
Petrol filter	13A-5
Diesel filter	13A-6
Injection rail/Injector	13A-8
Fuel pump	13A-11
Checking the fuel supply pressure	13A-12
Checking the fuel pump flow	13A-14
Diesel fuel pressure and flow test	13A-16
Anti-percolation device	13A-17

GETtheMANUALS.org

Page

13B DIESEL INJECTION

Special notes	13B-7
Cleanliness	13B-15
Location of components	13B-19
High-pressure pump	13B-30
Injector	13B-49
Injection rail	13B-61
High-pressure pipes	13B-70
Pressure sensor	13B-75
Rail pressure sensor	13B-76
Pressure regulator	13B-77
Diesel fuel temperature sensor	13B-79
Rail protector	13B-80
Accelerator potentiometer	13B-87
Computer	13B-88
Power computer	13B-90
Injection warning light	13B-92
Immobiliser function	13B-94
Injection/Air conditioning programming	13B-95
Idle speed correction	13B-97
Heating elements	13B-99
Cruise control with proximity control	13B-103
Centralised coolant temperature management	13B-106
Antipercolation device	13B-108
Allocation of computer tracks	13B-109
Allocation of power computer tracks	13B-113

Page

13C PREHEATING

Pre-postheating unit	13C-1
Heater plugs	13C-3
Pre/postheating control	13C-5

14A EMISSION CONTROL

Fuel vapour rebreathing	14A-1
Oil vapour rebreathing	14A-5
Exhaust gas recirculation	14A-10
Exhaust gas rebreathing	14A-12

16A STARTING-CHARGING

Alternator	16A-1
Starter motor	16A-10

17A IGNITION

Static ignition	17A-1
Spark plugs	17A-3

GETtheMANUALS.org

Page

17B PETROL INJECTION

Location of components	17B-1
Accelerator potentiometer	17B-9
Computer	17B-10
Special notes	17B-12
Injection fault warning light	17B-14
Immobiliser function	17B-16
Injection/Air conditioning programming	17B-17
Motorized throttle unit	17B-20
Idle speed correction	17B-22
Adaptive idle speed correction	17B-24
Richness regulation	17B-25
Adaptive richness correction	17B-29
Centralised coolant temperature management	17B-31
Camshaft dephaser	17B-33
Heating element	17B-34
Turbocharging pressure regulator	17B-36
Cruise control/Adaptive cruise control/ Speed limiter	17B-38
Special features of the On Board Diagnostics system	17B-41
Conditions for the OBD warning light coming on	17B-42
Conditions for On Board Diagnostics fault finding	17B-43
Combustion misfire fault finding	17B-44
Catalytic converter fault finding	17B-45
Oxygen sensor fault finding	17B-46
Special features of the On Board Diagnostics system	17B-47
Combustion misfire fault finding	17B-50
Catalytic converter fault finding	17B-51
Oxygen sensor fault finding	17B-52
Fuel supply system fault finding	17B-53
Allocation of computer tracks	17B-54

Page

19A COOLING SYSTEM

Specifications	19A-1
Filling/bleeding	19A-2
Test	19A-3
Diagram	19A-4
Thermostat	19A-9
Radiator	19A-10
Coolant pump	19A-12

19B EXHAUST

General information	19B-1
Exhaust pipe assembly	19B-2
Catalytic converter	19B-4
Front catalytic pre-converter	19B-7
Rear catalytic pre-converter	19B-8
Front catalytic pre-converter	19B-9

19C FUEL TANK

Draining the fuel tank	19C-1
Fuel tank	19C-3
Filler neck	19C-6
Pump-sender unit	19C-7
Dipstick	19C-9
Fuel filter	19C-10

19D ENGINE MOUNTING SYSTEM

Suspended engine mounting	19D-1

GETtheMANUALS.org

Vehicle type	Engine	Gearbox	Automatic transmission	Cubic capacity (cc)	Bore (mm)	Stroke (mm)	Compression ratio
BJ0K	**F4R turbo**	**PK6**	**SU1**	**1998**	**82.7**	**93**	**9.5/1**
BJ0E- BJ0F BJ0G - BJ0H	**G9T**	**PK6**	**SU1**	**2188**	**87**	**92**	**18/1**
BJ0J	**P9X**	**-**	**SU1**	**2958**	**87.5**	**82**	**18.5/1**
BJ0V	**V4Y**	**-**	**SU1**	**3498**	**95.5**	**81.4**	**10.3/1**

Engine Workshop Repair Manuals to be consulted depending on the type of engine:
– F4R engine Engine manual **Mot. F4** and F4R engine technical note,
– G9T engine Engine manual **Mot. G9T**,
– P9X engine Engine manual **Mot. P9X**,
– V4Y engine Engine manual **Mot. V4Y**.

GETtheMANUALS.org

OIL CONSUMPTION MEASUREMENT PROCEDURE

a) Topping-up to the maximum level

The operation must be carried out while the engine is warm (after the **cooling fan** has cut in) and after leaving to stabilise for **15 minutes** to allow all the oil to drain into the sump.
Check visually using the dipstick.
Top up to the maximum level.
Seal the drain plug (with a paint mark on both the filler plug and the sump drain plug) in order to be able to check later that it has not been removed.

b) Customer driving

Ask the customer to drive for a period corresponding to about **1 250 miles (2 000 km)** or before the minimum level is reached.

c) Topping up to the maximum level

The operation must be carried out while the engine is warm (after the **cooling fan** has cut in) and after leaving to stabilise for **15 minutes**.
Check visually using the dipstick.
Top up to the maximum level.
Note the quantity of oil and the mileage covered since the last top-up to maximum level.

d) Measurement of oil consumption

$$\text{OIL CONSUMPTION} = \frac{\text{Quantity of oil added (in litres)}}{\text{km (in thousands)}}$$

GETtheMANUALS.org

SPECIAL TOOLING REQUIRED	
Mot. 836-05	Boxed kit for measuring oil pressure
Mot. 1658	Union for measuring oil pressure on P9X and V4Y engines
EQUIPMENT REQUIRED	
22 mm long socket	

CHECKING

The oil pressure should be checked when the engine is warm (approximately **80°C**).

Contents of kit **Mot. 836-05**.

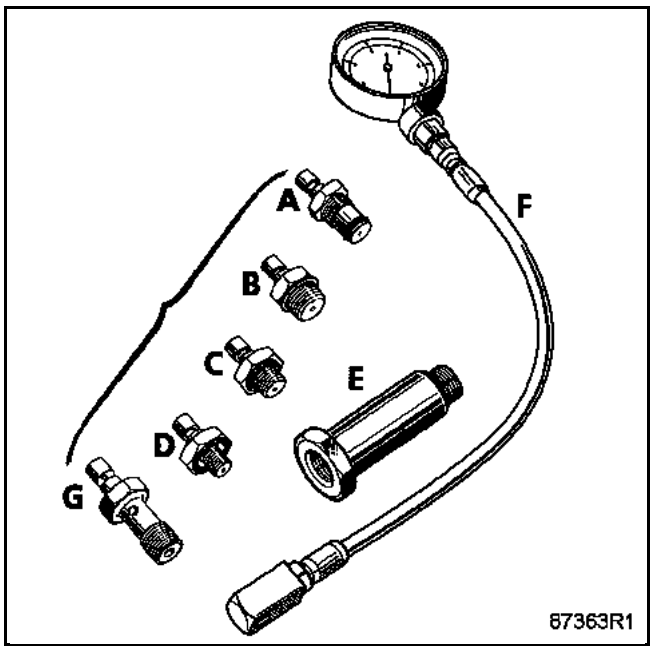

USE

F4R engine	G9T engine	P9X engine	V4Y engine
C + F	F + E + C	Mot. 1658 + F	

Connect the pressure gauge in place of the oil pressure switch.

CHECKING THE ENGINE

F4R engine

Idle speed **1 bar**
3000 rpm **3 bar**

G9T engine

Idle speed **1.6 bar**
3000 rpm **4 bar**

P9X engine

Idle speed: **1.5 bar**
4700 rpm: **2.9 bar**

GETtheMANUALS.org

SPECIAL TOOLING REQUIRED	
Mot.1202-01 Mot. 1202-02	Pliers for large hose clips
Mot. 1372	Set for removing tamperproof screws
Mot. 1448	Remote operation clip pliers for cooling system hose clips
Mot. 1390	Adjustable engine mounting bracket tool
Mot. 1599	Tool for unclipping heater matrix
T. Av. 476	Ball joint extractor tool

TIGHTENING TORQUES (in daNm or/and)	
Brake calliper mounting bolt	10.5
Shock absorber base bolt	18
Lower ball joint nut	11
Driveshaft gaiter mounting bolt	3
Steering ball joint nut	3.7
Suspended engine mounting upper linkage mounting bolt	10.5
Body mounting bolt for the suspended engine mounting movement limiter	2.1
Mounting bolts on the engine for suspended engine mounting cover	6.2
Engine tie-bar fixing bolts:	
– on the sub-frame	10.5
– on the engine:	18
Bolt mounting the aluminium side members to the lower cross member	4.4
Bolt mounting the aluminium side member tie-rods	4.4
Wheel bolt	11

REMOVAL

Put the vehicle on a two-post lift.

During this operation, the vehicle must be secured to the lift with a strap to prevent it from becoming unbalanced.

Refer to Section 02 Underbody lift for information on positioning the belt.

Remove:
– the battery;
– the front wheels,
– the engine undertray,
– the right and left wheel arch liners and side protectors

Drain:
– the coolant circuit using filling equipment,
– cooling system through the radiator bottom hose
– gearbox and engine if necessary.

GETtheMANUALS.org

Remove the fuel supply pipes.

Diesel engines

Remove the inlet pipes (1) and return pipes (2) covering the filter, and the electrical connector (3).

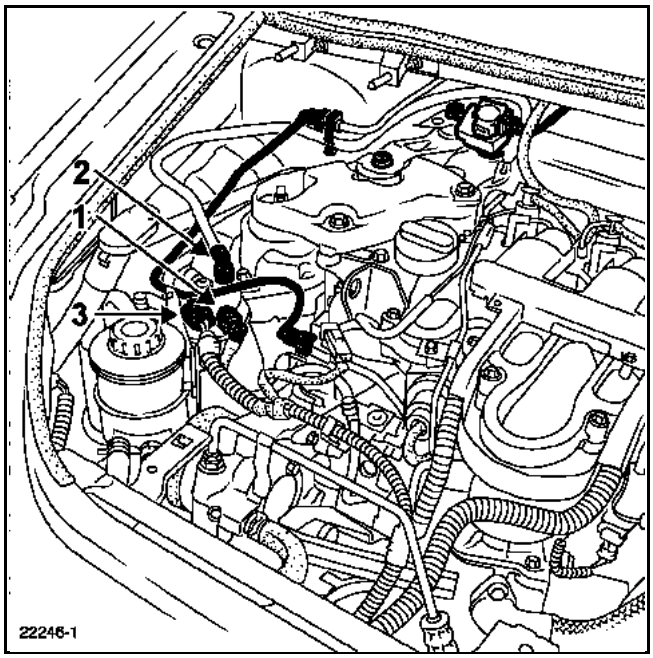

All engine types

Remove:
– the lower ball joint nuts (use an Allen key cut down to **X = 22 mm** to lock the ball joints if necessary),

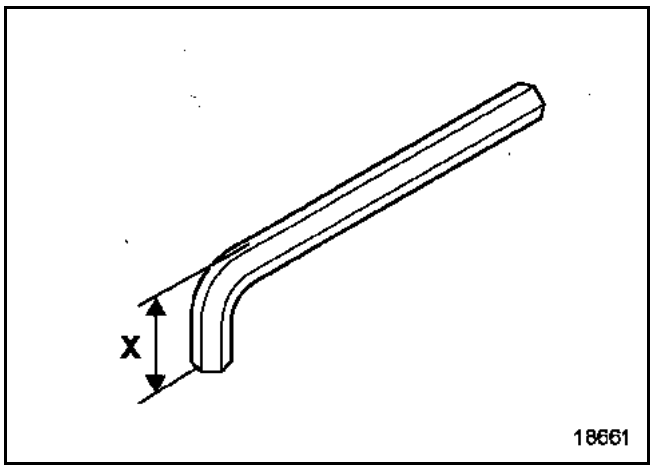

– the brake calipers (4) and secure then to the suspension springs,
– the ABS sensor connectors (5),
– the two shock absorber base mountings (6),

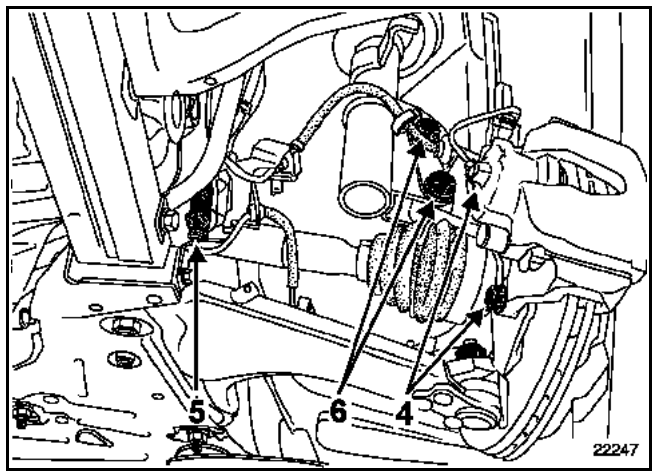

– the steering ball joints using tool **T. Av. 476,**
– the two mounting bolts securing the driveshaft mounting clamp to the bearing support (right-hand side of vehicle),
– the driveshaft gaiter mounting bolts (left-hand side of the vehicle on PK6 manual gearboxes).

Remove the driveshaft and then remove the hub unit assembled with the driveshaft.

Disconnect the fog light connectors.

GETtheMANUALS.org

Remove:
– the bumper,
– the headlight washer pipe (only for vehicles fitted with xenon bulbs),
– the power steering reservoir;
– the cooling scoops,
– the air resonator (only ***V4Y***),

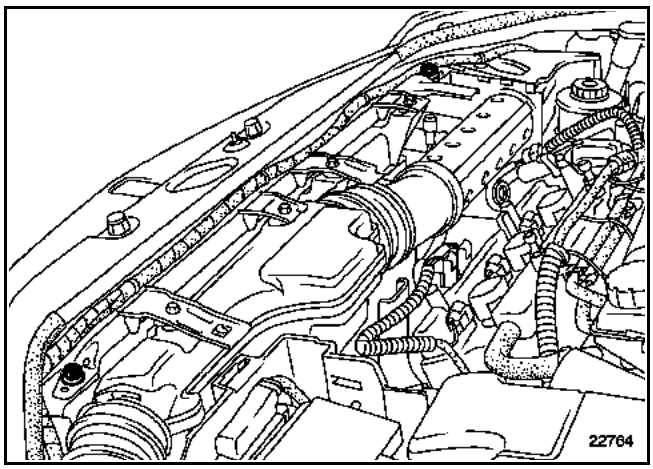

– the battery tray at (7).

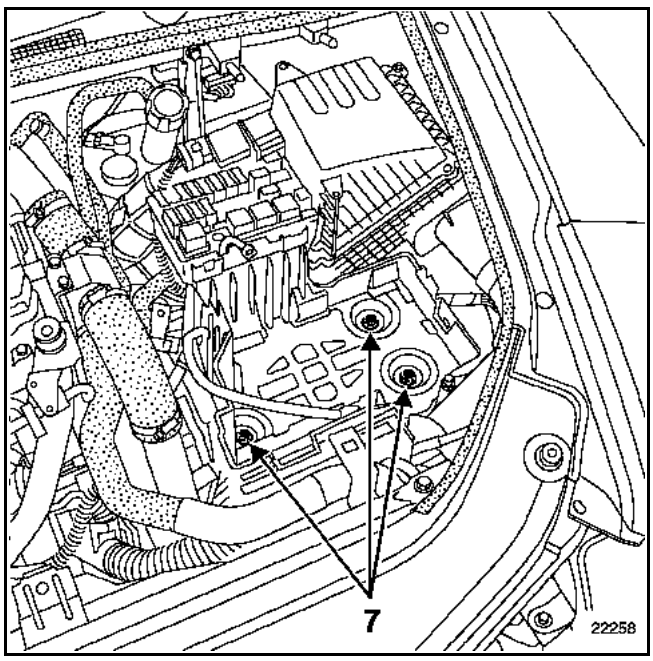

To do this, drill out the three tamperproof bolts using a ∅ 5 mm diameter drill bit in the bolt shaft, then remove the bolt using Mot. 1372.

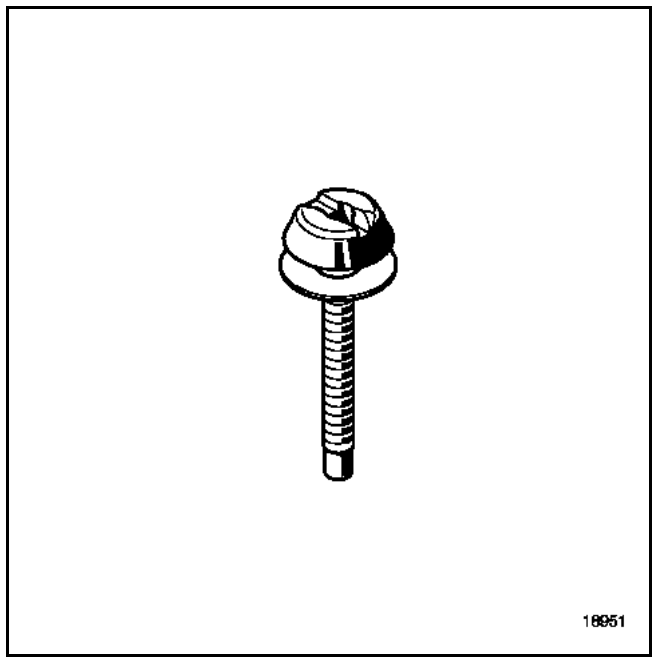

Remove:
– the air filter,
– the computer, followed by its mounting,
– the earthing braid on the body shell,

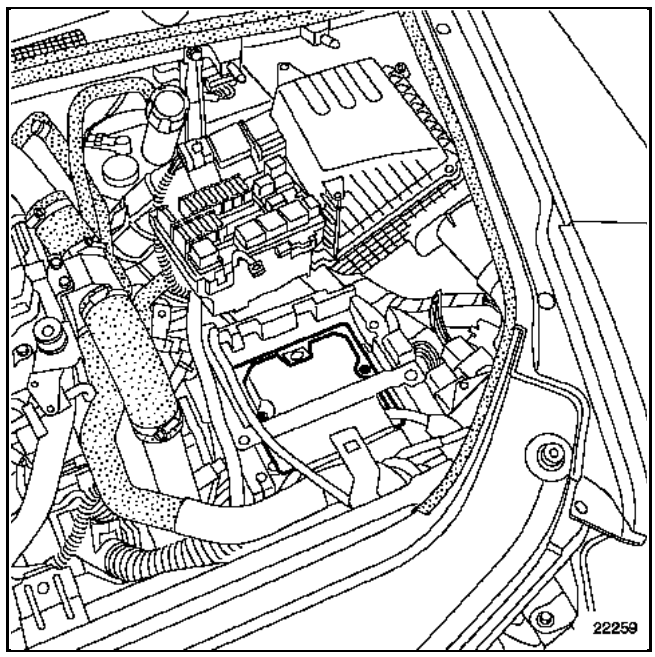

GETtheMANUALS.org

– the relay plate (8) and unclip the fuse holder at (9),
– the engine/passenger compartment wiring harness connectors (10).

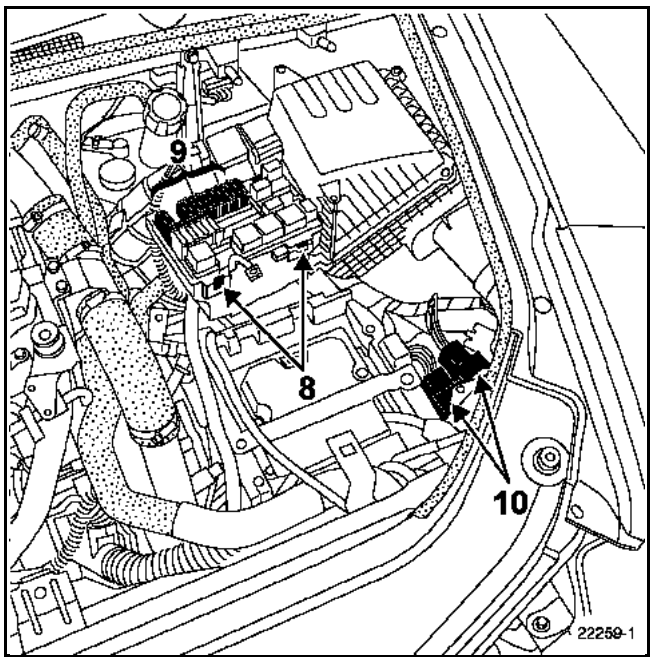

PK6 GEARBOX

Remove:
– the gearbox controls at (11).
– the hydraulic clutch control by removing the clip at (12).

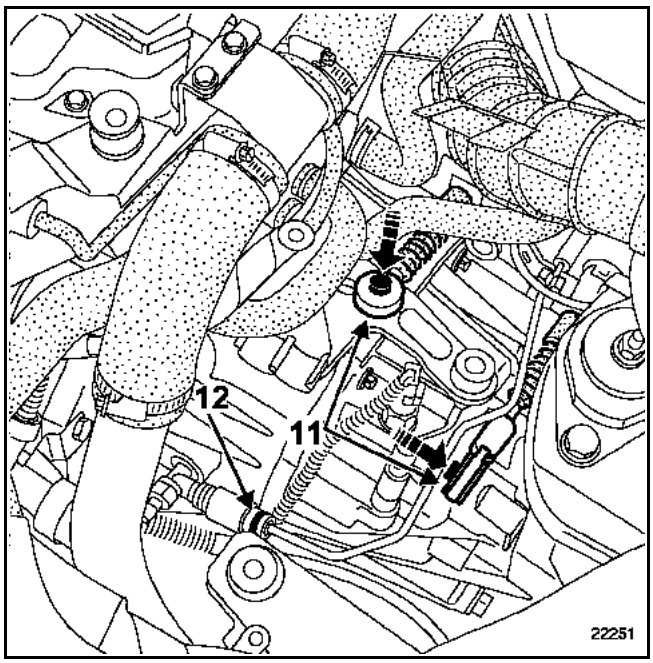

SU1 GEARBOX

Remove:
– the gearbox control (13)

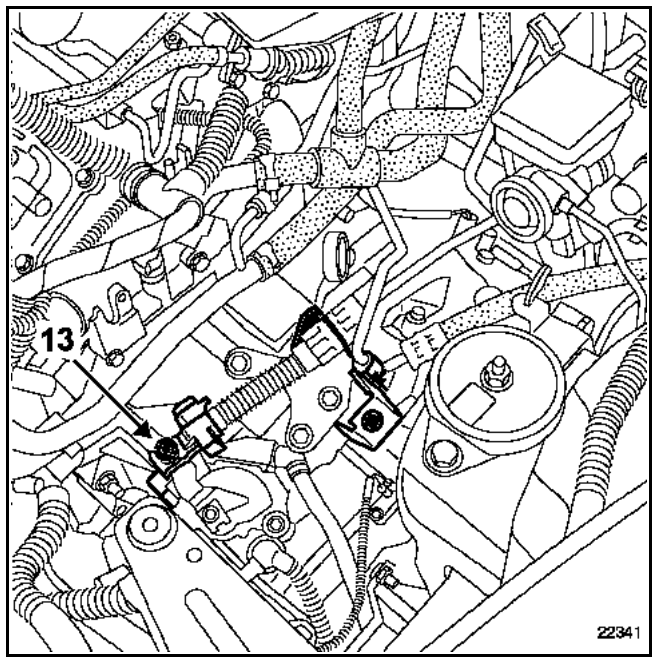

– the upper impact bar,

GETtheMANUALS.org

– the air hoses on the exchanger (***F4R***), on the engine shut-down idle switch at (14) (***G9T***),

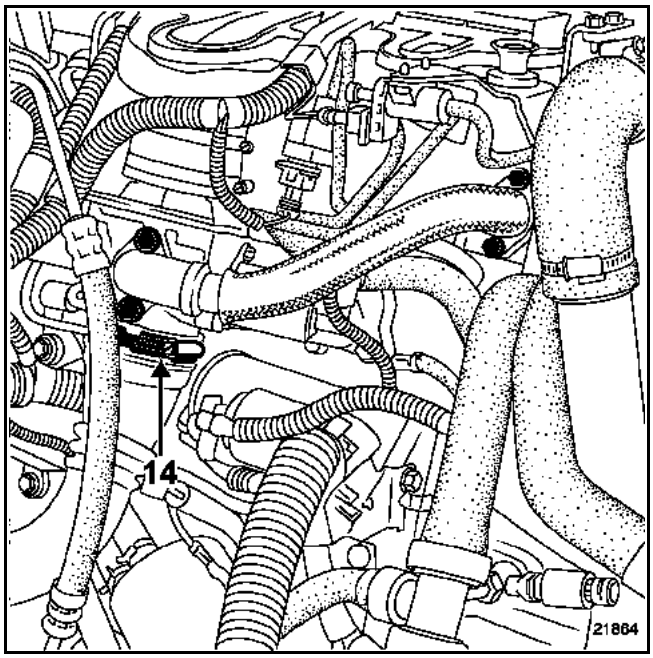

– the hoses on the inlet manifold and the turbo (***P9X***),
– the upper radiator hose,
– the electrical connector of the fan assembly resistor,
– the fan assembly,
– the air conditioning ducts on the compressor,
– the two ducts on the condenser at (15) and remove them.

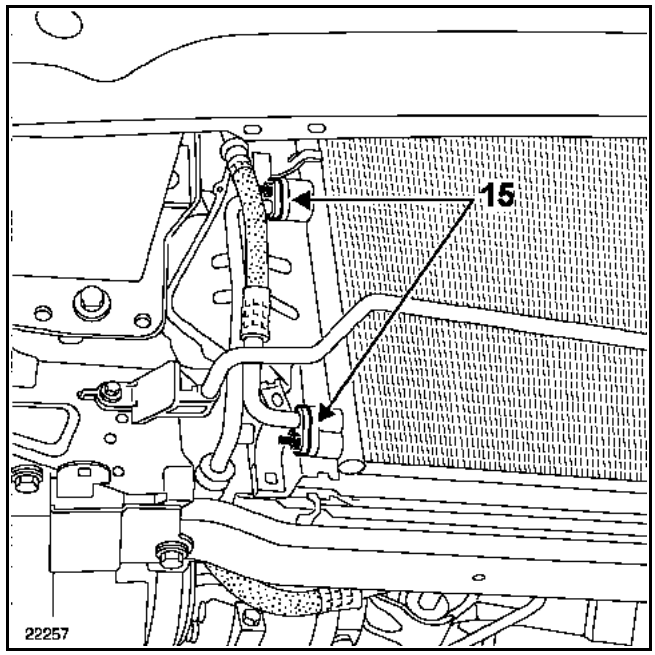

NOTE: plugs must be fitted onto the hoses and pressure relief valve to prevent moisture from entering the circuit.

Remove:
– the power steering hose at (16),

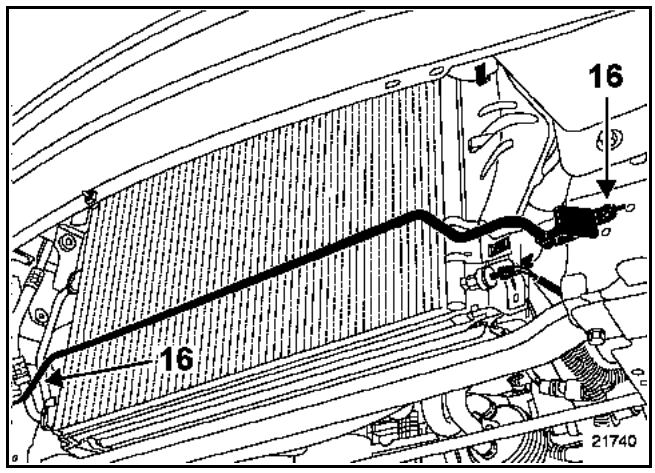

GETtheMANUALS.org

– the tie-bars (A),
– both aluminium side members (B),
– the three mounting bolts of the ABS assembly protection plate,
– the preheater unit connectors (***P9X engine***),
– the speed camera (see section **83D - Cruise control**),
– the lower mountings of the cooling assembly (C),

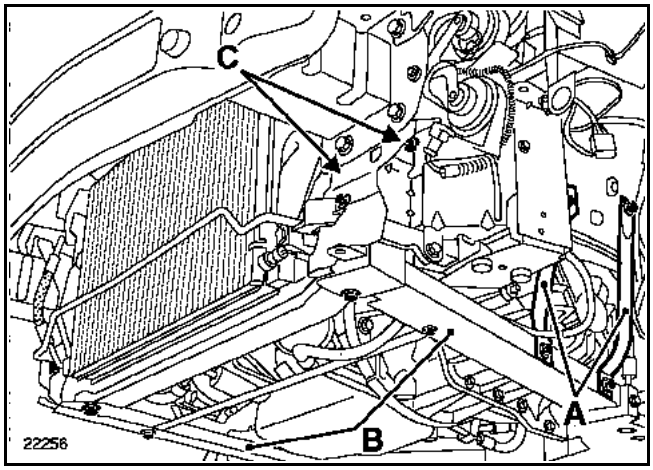

– the cooling assembly with the lower cross member,
– the torque reaction arm,
– both precatalyzers (***V4Y engine***),
– the exhaust manifold clamp,
– the exhaust silencer clamp (***G9T engine***),
– the heating radiator hoses using the tool **Mot. 1599** at (D).

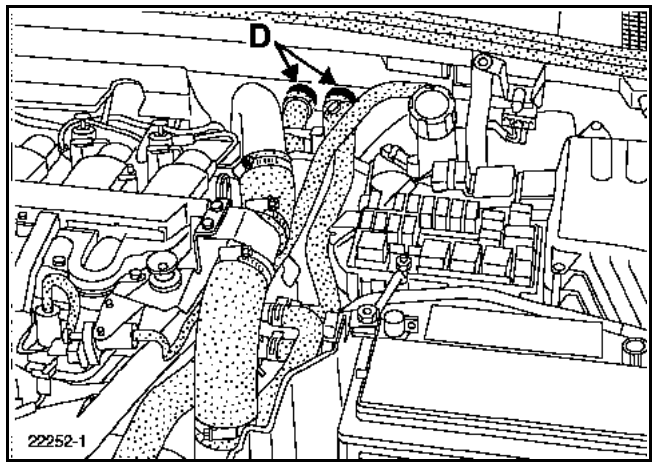

Disconnect the water hoses.

Remove:
– the brake servo pipe on the vacuum pump,
– the flexible power steering hose on the pump.

G9T engine

Remove both power steering ducts on the steering unit and unclip them under the oil sump.

GETtheMANUALS.org

Fit **Mot. 1390** under the engine; it is essential to place the mounting pads as close as possible under the shaded areas (A) indicated below.

G9T engine

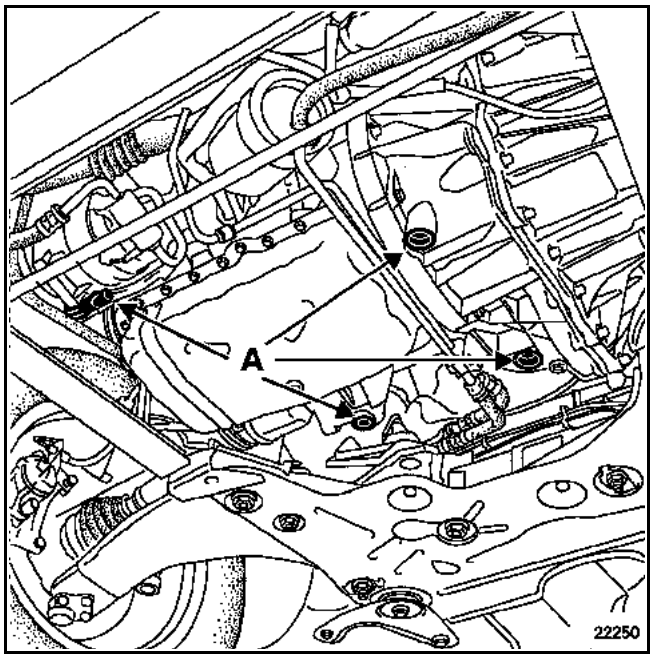

F4R engine

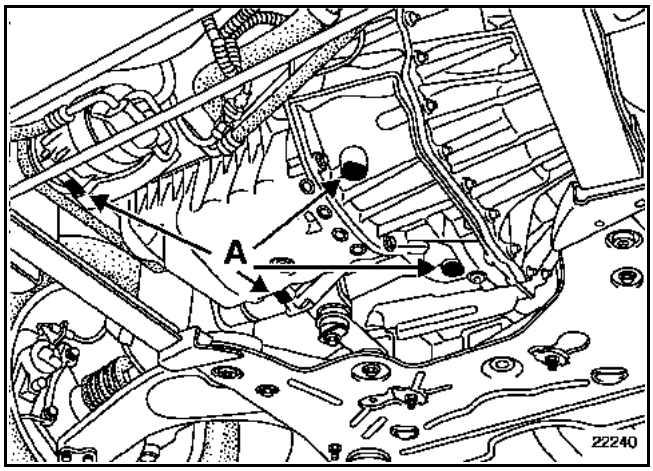

P9X engine

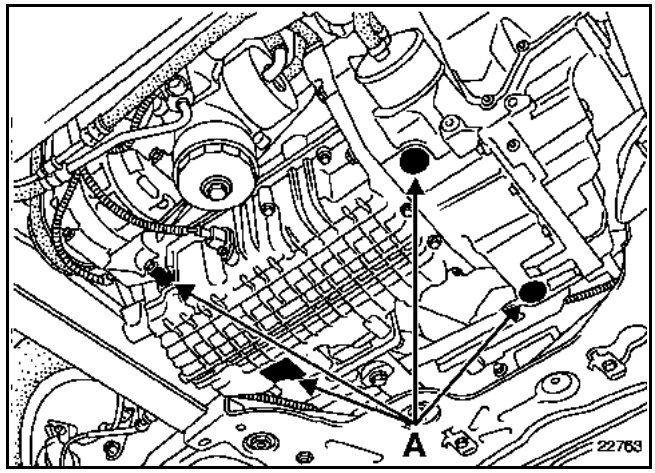

V4Y engine

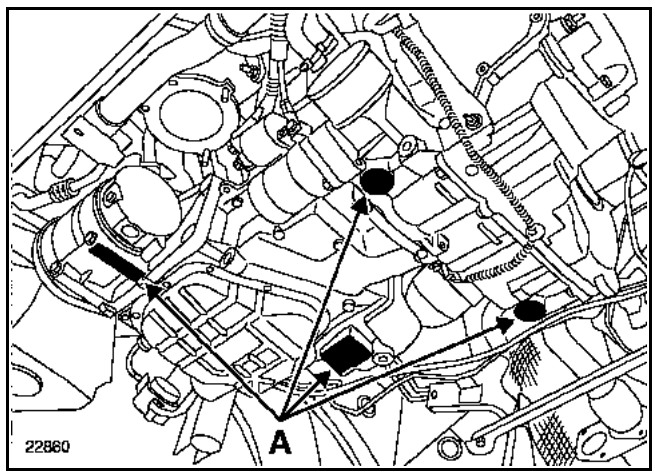

GETtheMANUALS.org

Remove the front right-hand suspended mounting support.

NOTE: check that the engine is fitted onto the Mot. 1390 support before undoing the bolts completely.

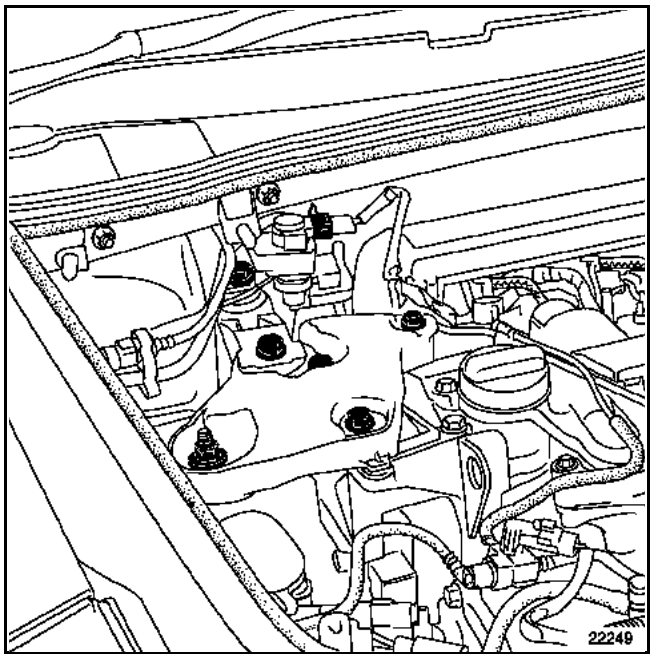

Remove the nut (D) and strike it with a copper hammer.

NOTE: the Mot. 1390 mounting pads should be almost touching the engine; when struck with the hammer, the engine rests on the support.

Remove the rubber mounting (E).

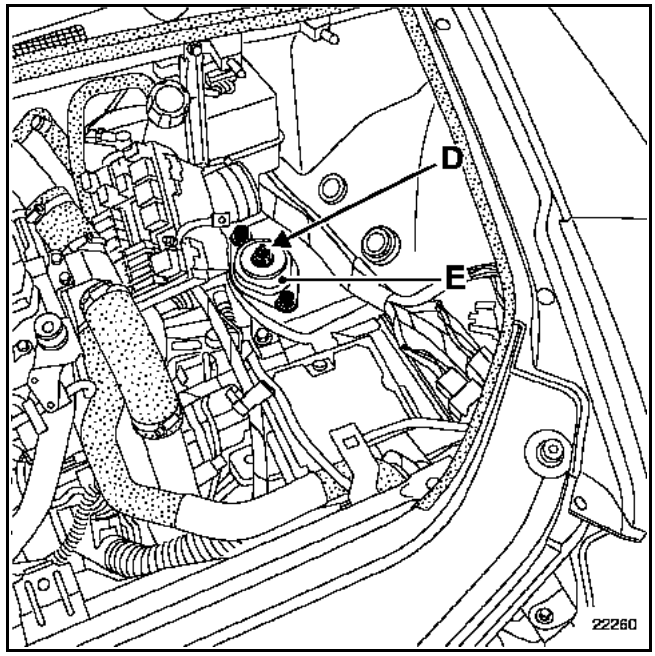

F4R, P9X and V4Y engines

Remove the gearbox mounting.

GETtheMANUALS.org

P9X engine

Shift the engine forwards, remove the heat screens, then remove the catalytic converter.

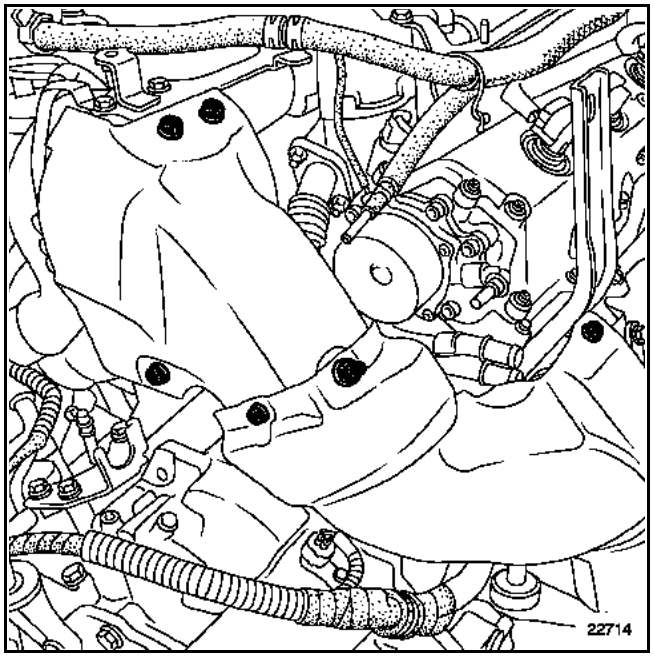

All engine types

Raise the body shell by shifting the engine slightly forwards to allow access between the engine mounting and the gearbox.

Remove the engine using **Mot. 1390.**

REFITTING

Refit the engine-gearbox assembly following the same method as for removal.

Refit:
– the left suspended mounting,
– the right suspended mounting,
– the engine tie-bar.

Refer to section **19D** Suspended mounting for tightening torques.

Top up the reservoir with brake fluid in order to bleed the clutch.

Bleed the clutch (see **section 37A Control of mechanical components**).

Top up the brake fluid.

Check that the clutch system is operating correctly.

Refit using the reverse of the removal procedure.

Replace the tamperproof screws with new ones.

Perform the following operations:
– fill the gearbox with oil,
– fill the engine with oil, if necessary,
– fill and bleed the cooling system (see **Section 19A Filling - bleeding**).
– fill and bleed the power assisted steering circuit,
– fill the refrigerant circuit using the filling equipment.

Apply **FRENBLOC Loctite** to the brake calliper mounting bolts before fitting and tighten them to the correct torque.

IMPORTANT: ensure that the brake pipe and the ABS sensor wiring are properly fixed.

Press the brake pedal several times to bring the pistons into contact with the brake pads.

Check the angles of the front axle (see **section 07B: Adjusting the axle assemblies**).

Depending on the vehicle equipment, check and adjust:
– the distance cruise control (see **section 83D: Cruise control**),
– xenon bulb headlights (see **section 83C: Fitted networking system**).

GETtheMANUALS.org

TIGHTENING TORQUES (in daNm)	
Sump bolt	**1.5**
Engine tie-bar mounting bolts:	
– on the sub-frame	**10.5**
– on the engine	**18**

REMOVAL

Put the vehicle on a two-post lift.

Disconnect the battery.

Remove the engine undertray.

Drain the engine.

Remove:
– the bolts (A) and (B) of the engine tie-bar,

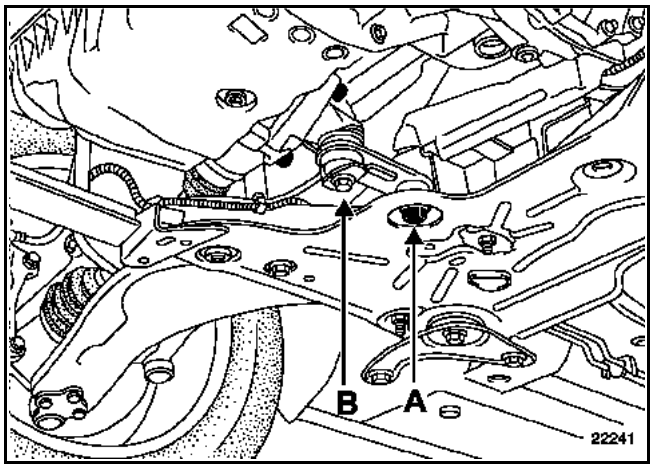

– the sump,

Clean the gasket face.

REFITTING

Put a drop of **RHODORSEAL 5661** on either side of bearing No. 1 at (A), and at the intersection of the crankshaft closure panel and the cylinder block at (B).

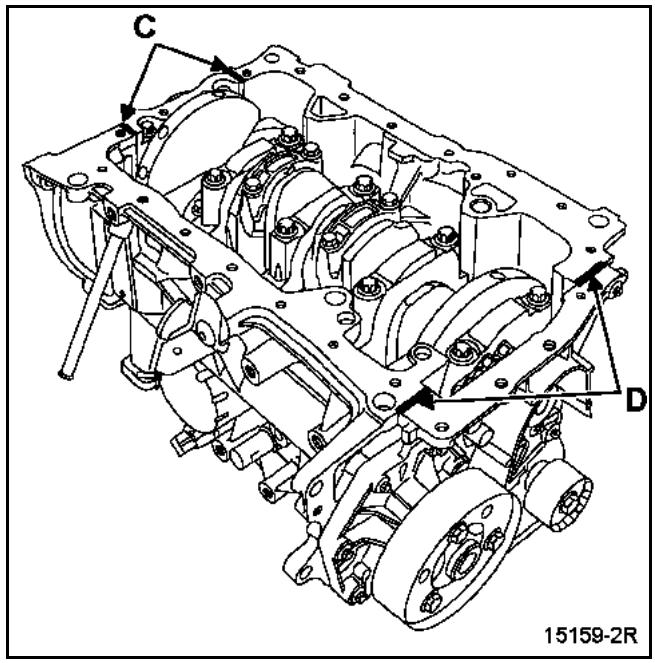

Refit the sump with a new gasket, pre-tightening bolts 1, 6, 10, 15, 18 to **0.8 daNm,** then finally tighten to a torque of **1.5 daNm** in the order recommended below.

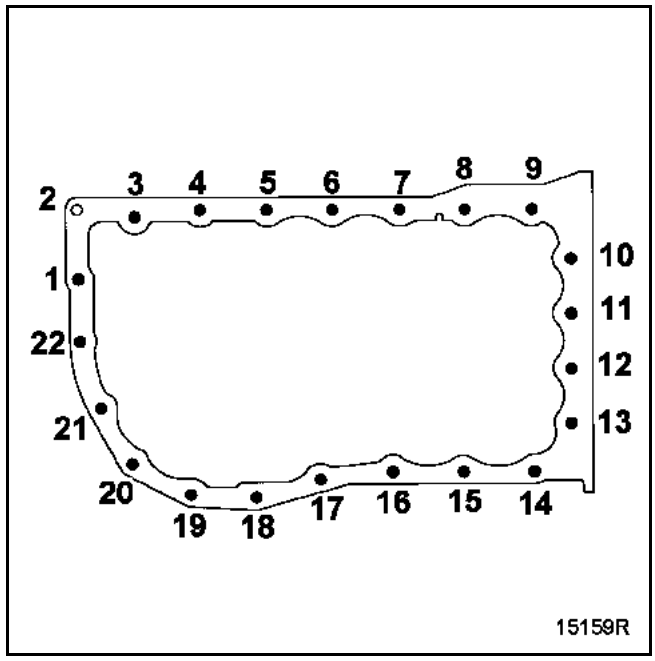

GETtheMANUALS.org

TIGHTENING TORQUE (in daNm)	
Sump bolt	0.9

REMOVAL

Put the vehicle on a two-post lift.

Disconnect the battery.

Remove:
– the engine covers,
– the engine undertray,
– the power steering pipe mounting,

Drain the engine.

Unclip both power steering pipes and remove them.

Remove the sump.

Clean the gasket face.

REFITTING

Put some **RHODORSEAL 5661** in (1).

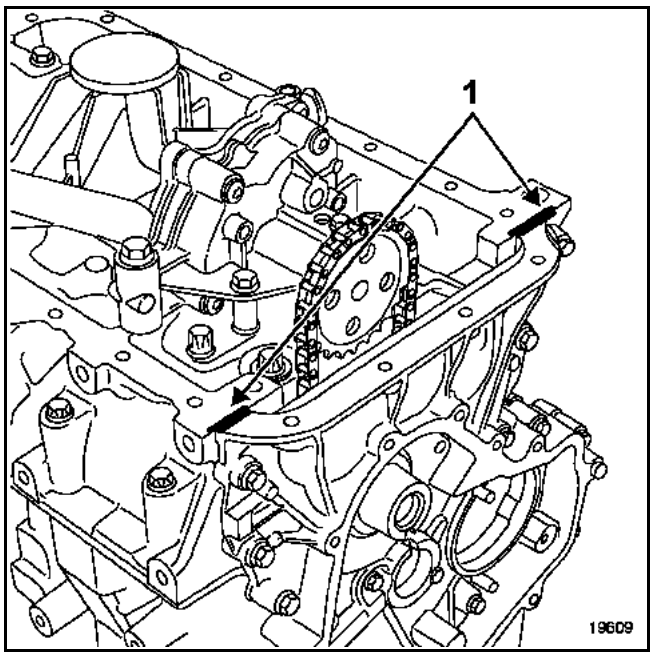

Refit:
– the sump with a new gasket, pre-tightening the bolts to a torque of **0.5 daNm**, then finally tighten to a torque of **0.9 daNm in the recommended order.**

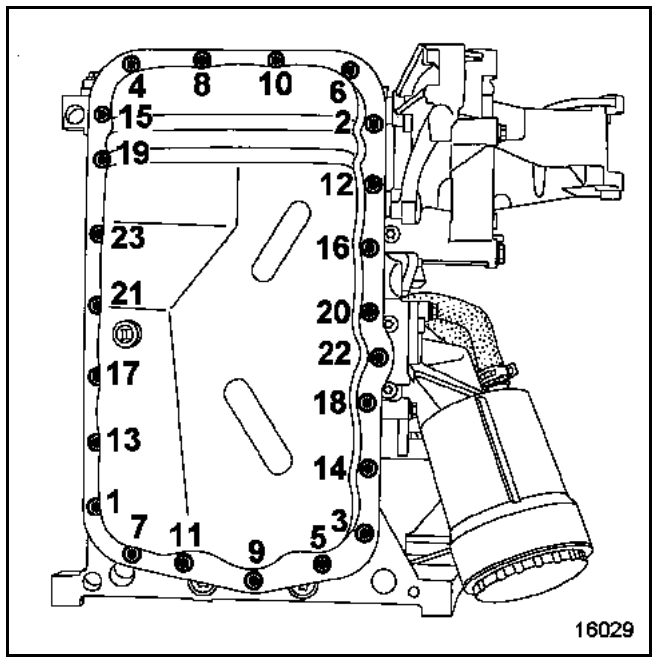

– the power steering pipe mountings,

Top up the engine oil.

GETtheMANUALS.org

TIGHTENING TORQUES (in daNm)	
Sump bolt	**2.5**
Air conditioning compressor mounting bolt	
– diameter 10	**5**
– diameter 8	**2.5**
Oil level sensor bolt	**1**

Drain the oil from the engine.

REMOVAL

Remove:
– the air duct on the inlet manifold,
– the dipstick and dipstick mountings,
– the oil return pipe on the sump,
– the oil level connector,
– the torque reaction arm and its mounting on the lower sump,

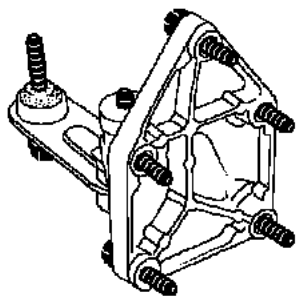

22454

– the accessories belt.

See section 07A: Tension of accessories belt for the method for removing the accessories belt.

Remove:
– the multifunction support mounting on the sump,
– the air conditioning compressor mountings in order to separate the multifunction support slightly from the sump,
– the sump mountings,
– the sump using the notches designed for this purpose.

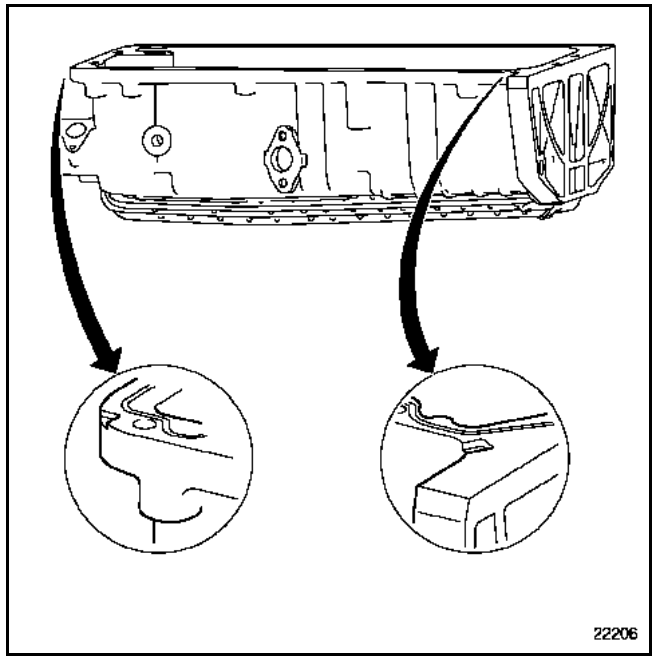

22206

GETtheMANUALS.org

CLEANING

It is important not to scratch the gasket faces of the aluminium components.

Clean the gasket faces with the product **Décapjoint** to dissolve the section of the gasket which is still attached to the sump and the cylinder block.

Apply the product to the part to be cleaned, wait approximately 10 minutes, then remove it using a wooden spatula.

Wear gloves whilst carrying out this operation.

REFITTING

Put a ring of **RHODORSEAL 5661** approximately **3 to 4 mm** in diameter on the surface of the sump.

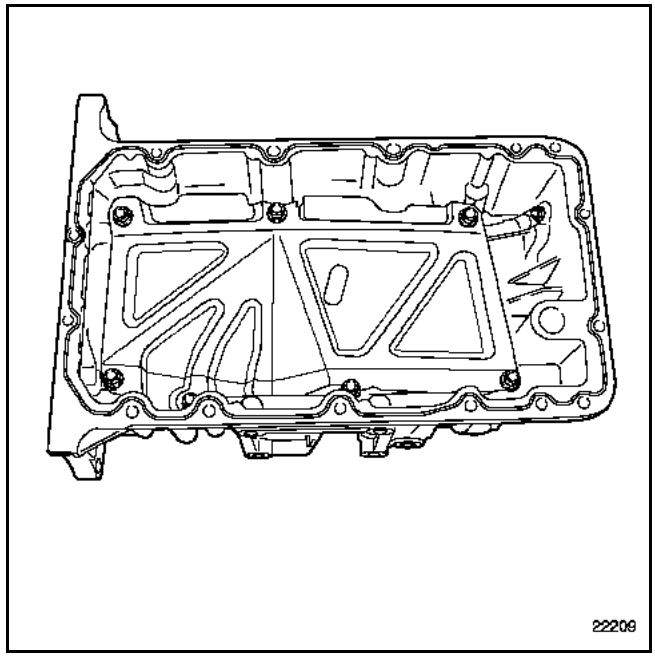

Tighten all the bolts on the sump to a torque of **2.5 daNm** in the order shown below.

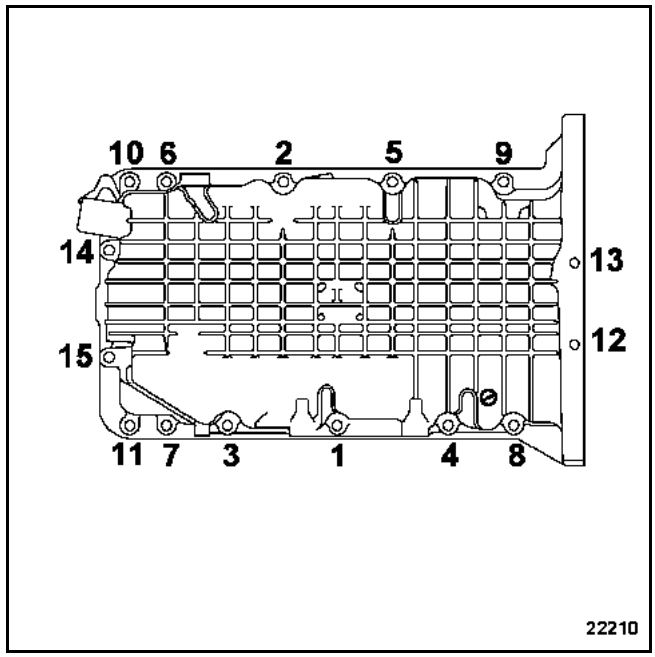

GETtheMANUALS.org

The refitting procedure is in the reverse order to removal.

To refit the accessories belt, **see section 07A: Tension of accessories belt.**

Top up the engine oil.

GETtheMANUALS.org

TIGHTENING TORQUE (in daNm)	
Sump bolt	**1**

Removing the sump is not difficult.

Clean the gasket face.

REFITTING

Tighten the bolts to a torque of **1 daNm** in the following order:

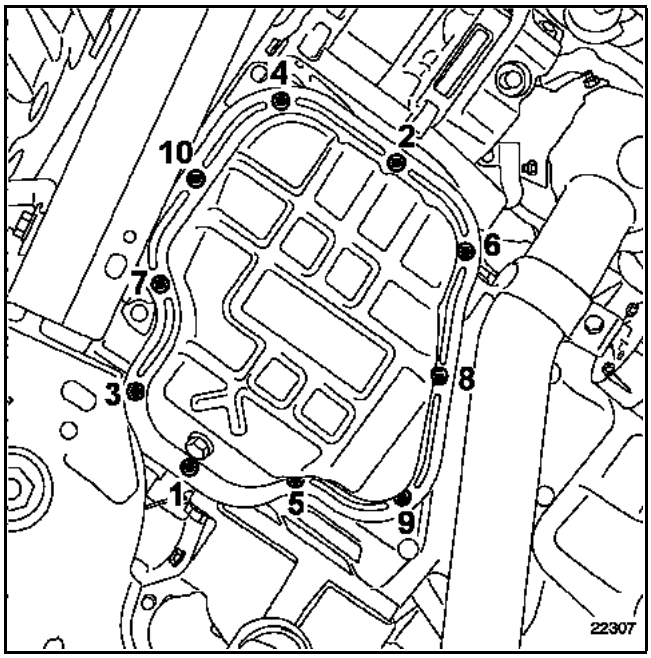

GETtheMANUALS.org

Put the vehicle on a two-post lift.

Disconnect the battery.

Remove the engine undertray.

Drain the engine.

Remove the sump (see **section 10A: Sump**).

Removing/refitting the oil pump does not present any difficulties.

Refit using the reverse of the removal procedure.

GETtheMANUALS.org

TIGHTENING TORQUE (in daNm or/and)	
Oil pump bolt	2.5

REMOVAL

Put the vehicle on a two-post lift.

Disconnect the battery.

Change the engine oil.

Remove:
– the sump (see method in **section 10A: Sump**).
– the oil pump mounting bolts (1), simply loosen the bolt (2).

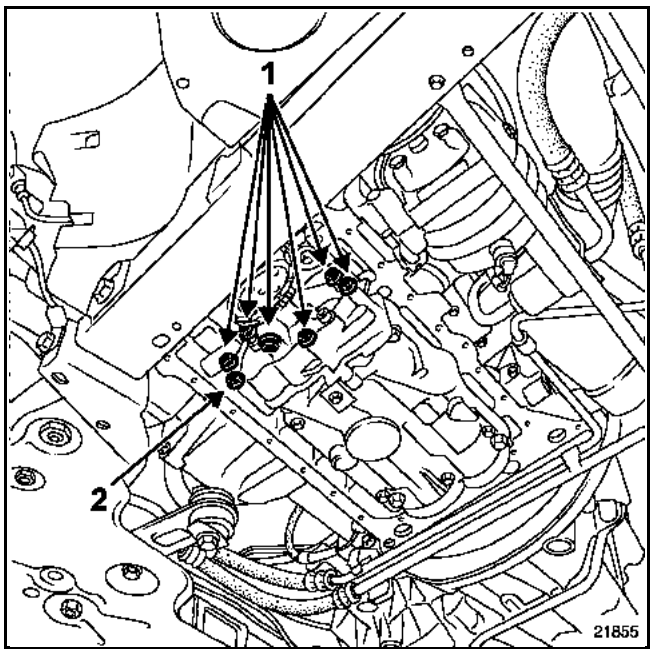

Swivel the oil pump casing (as shown below), taking care to keep the pinion (3) in place.

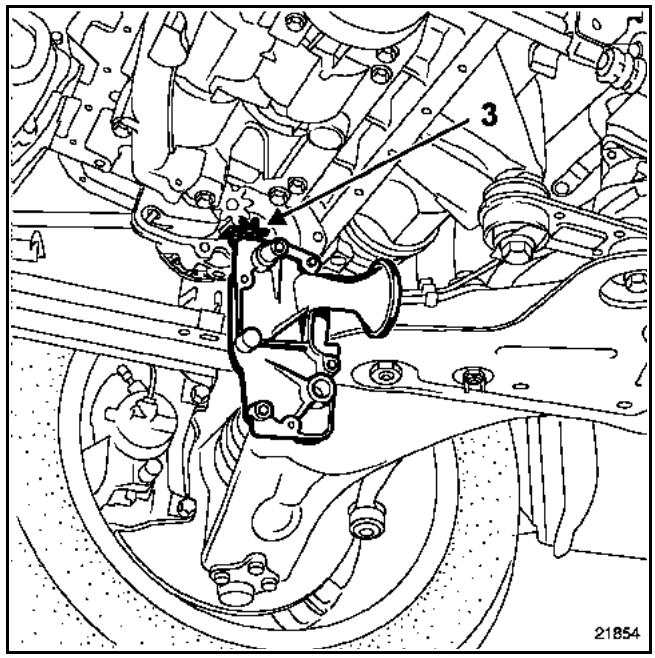

REFITTING

Refit in the reverse order to removal.

Refer to **section 10A: Sump** for the procedure for refitting the sump.

GETtheMANUALS.org

P9X engine

For information on the procedure for removing and refitting the oil pump, refer to engine manual **Mot. P9X**.

V4Y engine

For information on the procedure for removing and refitting the oil pump, refer to engine manual **Mot. V4Y**.

GETtheMANUALS.org

EQUIPMENT REQUIRED
Torque wrench 28 mm open-jawed spanner

TIGHTENING TORQUE (in daNm)	
Oil pipes on exchanger	3 ± 0.5

Put the vehicle on a two-post lift.

Disconnect the battery.

REMOVAL

Remove the bumper (**see section 54A.a: Removing front bumper**).

Drain the oil from the exchanger through the lower pipe at (1).

Remove:
– the upper pipe at (2),
– the two clips at (3),
– the oil exchanger.

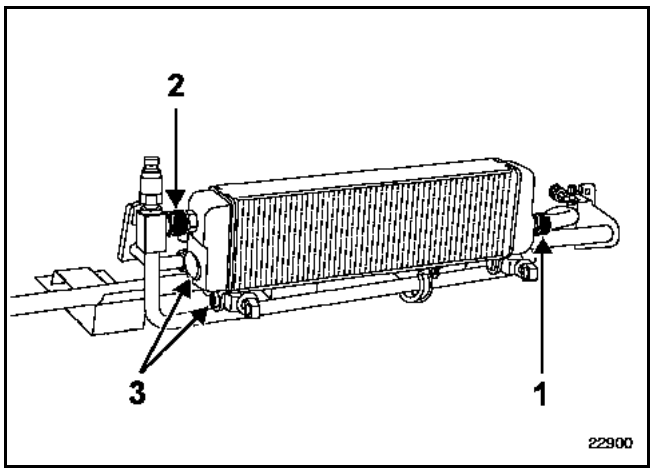

REFITTING

Refit:
– the radiator and the two clips,
– the lower piping.

NOTE: the oil by-pass unit is fitted with a temperature sensor which prevents engine oil passing to the exchanger if the oil temperature is below 110 °C. It is therefore essential to fill the exchanger before refitting it.

GETtheMANUALS.org

Method for filling the exchanger

Remove both pipes on the by-pass unit at (A) to facilitate filling the exchanger (exposed to air).

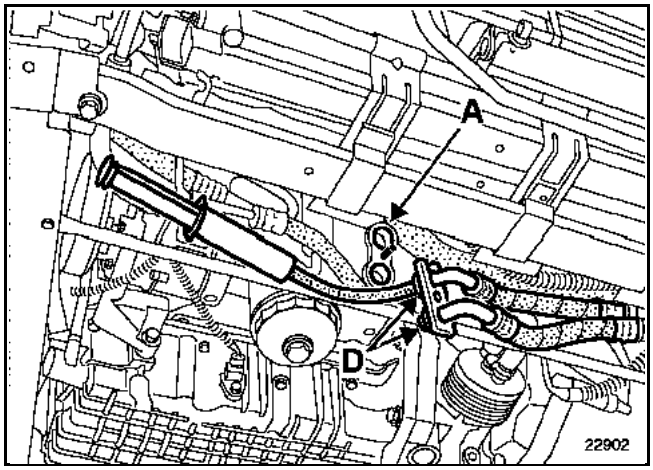

Fill the exchanger using a syringe at (B) until it overflows.

Refit the upper pipe then remove the filler neck (C) to continue filling with the syringe until it overflows.

Refit the filler neck.

Continue filling through the upper pipes of the by-pass unit (D) until they overflow.

The volume of the exchanger and pipes is approximately **0.8 litres**.

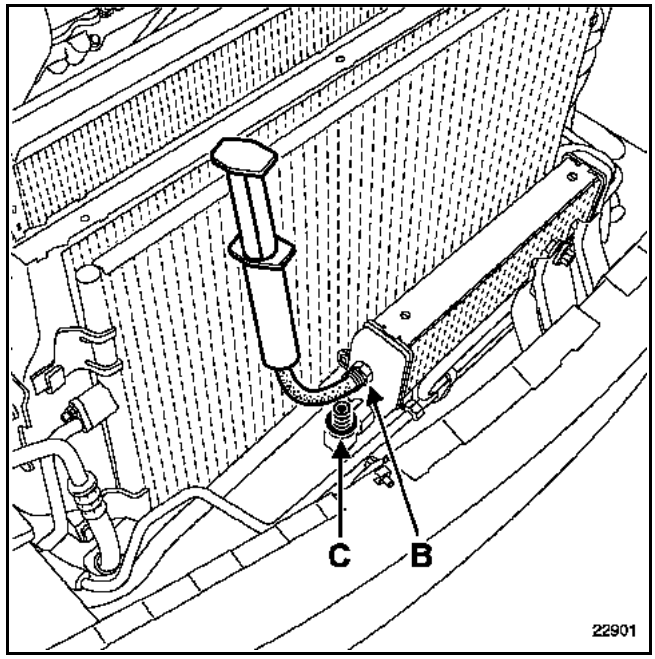

Refit the pipes to the by-pass unit.

Continue the refitting procedure in the reverse order to removal.

GETtheMANUALS.org

REMOVAL

Put the vehicle on a two-post lift.

Remove:
– the engine covers and the engine undertray,
– the electrical connector of the oil level sensor,
– both oil level sensor mounting bolts.

NOTE: to avoid destroying the sensor, it is very important to remove it without force by gently turning it anti-clockwise.

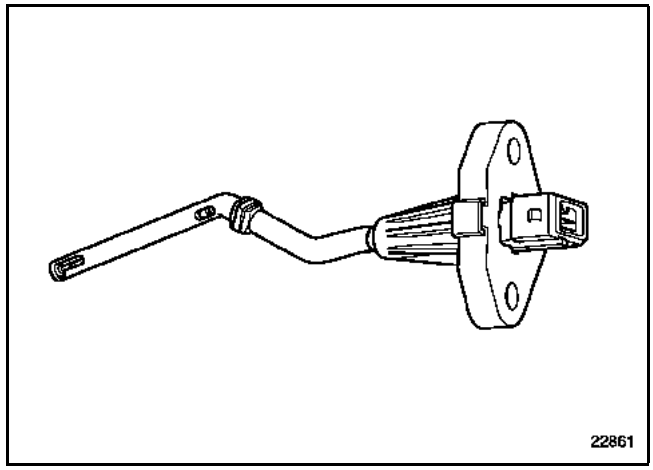

REFITTING

Refit in reverse order to removal.

GETtheMANUALS.org

SPECIAL TOOLING REQUIRED	
Mot. 1647	Oil filter removing tool

TIGHTENING TORQUE (in daNm)	
Oil filter drain plug	3.9

REMOVAL

Drain the oil by removing the lower plug.

Remove the cover of the oil filter using **Mot. 1647**.

Replace the filter and both seals:
– the O-ring on the oil filter cover,
– the seal on the oil filter drain plug.

REFITTING

Refitting does not present any particular difficulties and is carried out in the reverse order to removal.

GETtheMANUALS.org

SPECIAL TOOLING REQUIRED	
Mot. 1054	TDC setting pin
Mot. 1367-02	Engine support tool
Mot. 1496	Camshaft pulley adjustment tool
Mot. 1509	Camshaft locking tool
EQUIPMENT REQUIRED	
Angular torque wrench	

TIGHTENING TORQUES (in daNm and/or °)	
Tensioner wheel bolt	4.5
Crankshaft pulley bolt	2 + 135° ± 15°
Tension wheel nut	2.8
Suspended engine mounting upper tie-rod mounting bolt	10.5
Mounting bolts on the engine for suspended engine mounting cover	6.2
Body mounting bolt for the suspended engine mounting movement limiter	2.1
Wheel bolt	11

GETtheMANUALS.org

During this operation, a key must be fitted to the crankshaft (available from the Parts Store, separately or in a timing kit).

The following components must be replaced in this operation:
– the camshaft pulley nuts,
– the tension wheel and inertia reel.

REMOVAL

Put the car on a two-post lift.

Disconnect the battery.

Remove:
– the engine undertray,
– the right-hand wheel and mudguard,
– the side protection.

Fit the engine mountings **Mot. 1367-02**.

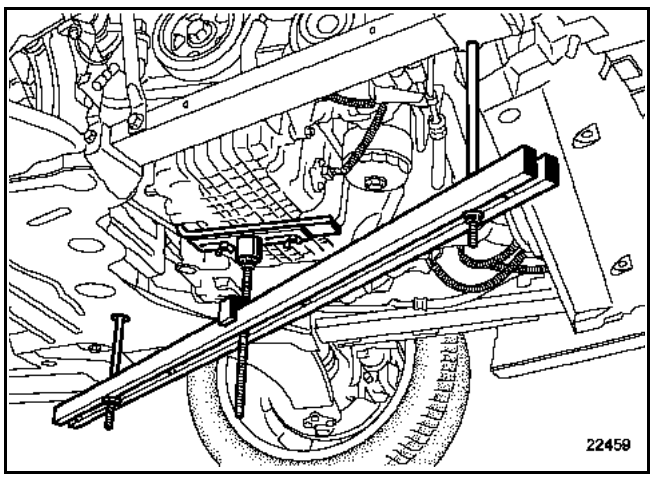

Bring the top part of the tool (A) into contact with the sump.

Adjust the position of part (A) on the sump using the mountings (B).

Gently lift the engine at (C) then tighten the nuts (D).

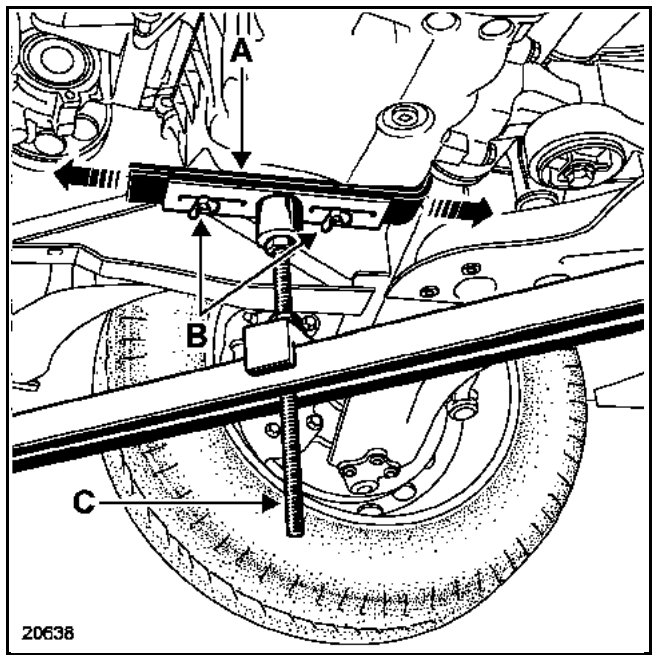

GETtheMANUALS.org

Remove:
– the tie-rod mounting bolts (2) then remove the suspended engine mounting - movement limiter assembly,

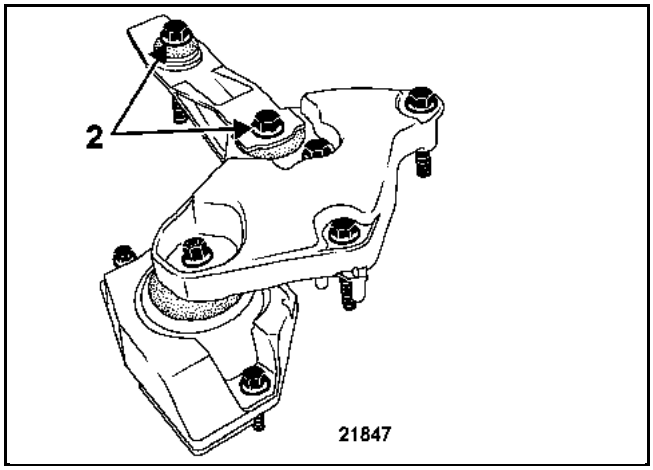

– the accessories belt (see **section 07A "Accessories belt tension procedure"**),

– the camshaft sealing plugs,

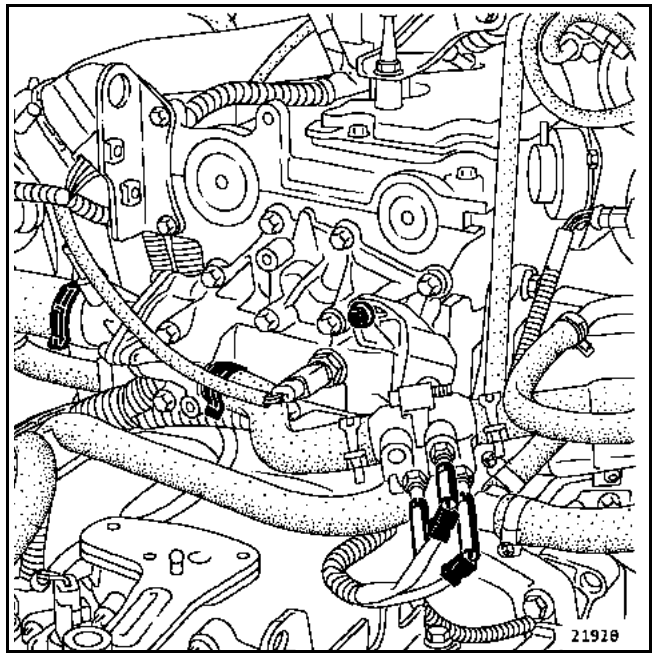

– the Top Dead Centre pin plug.

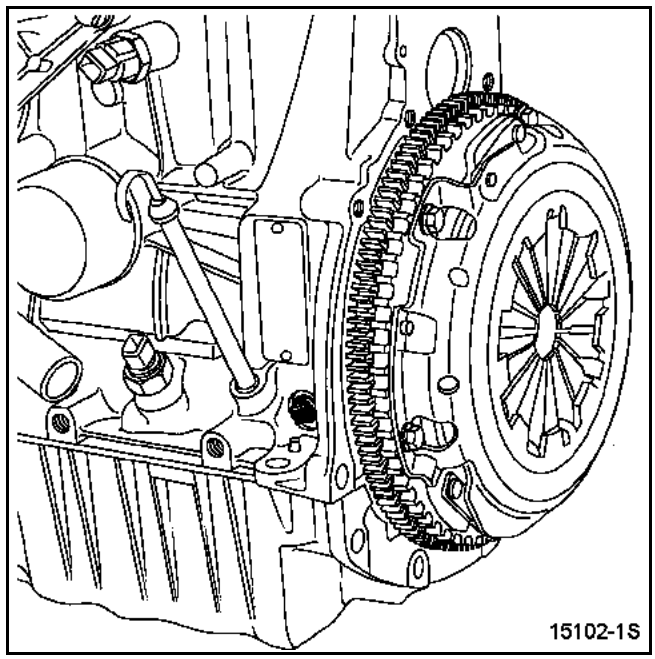

GETtheMANUALS.org

Adjusting the timing

Turn the engine over clockwise (timing side) so as to position the camshaft grooves towards the bottom in an almost horizontal position as shown on the diagram below. Insert the TDC pin **Mot. 1054** so that it is located between the balancing hole and the crankshaft timing groove.

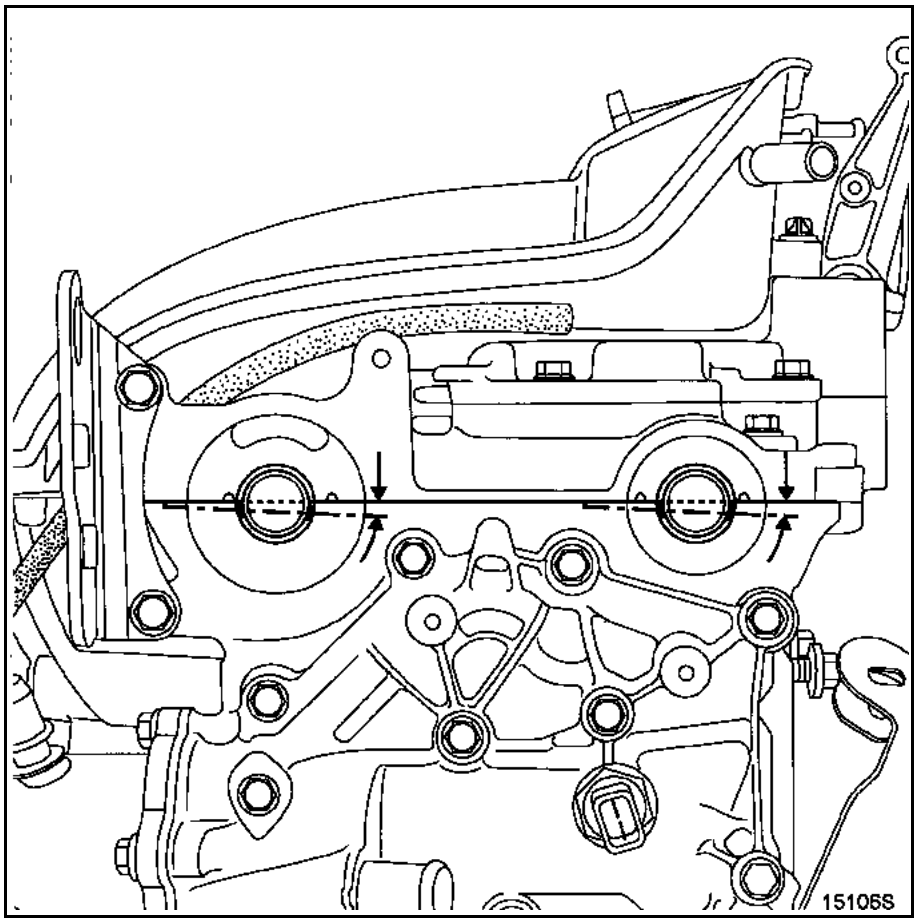

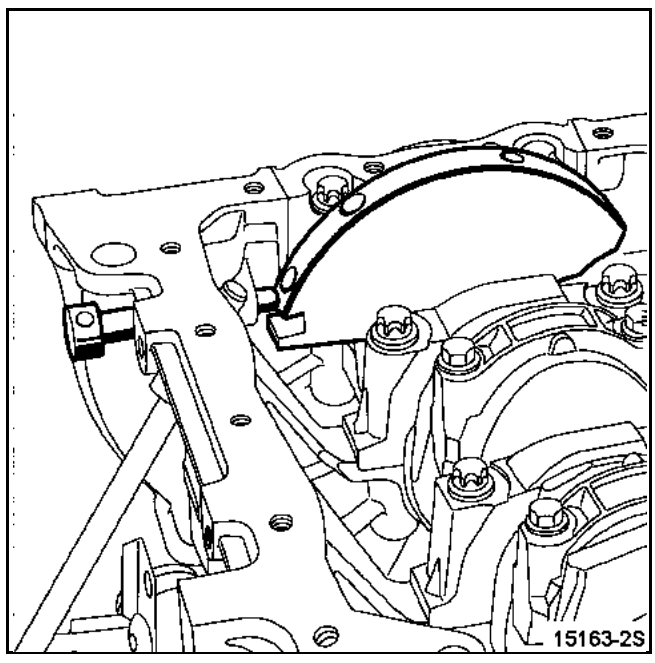

GETtheMANUALS.org

Rotate the engine slightly in the same direction, inserting the pin **Mot. 1054** to the setting point.

The grooves of the camshafts must, at the setting point, be horizontal and offset towards the bottom as shown on the diagram below.

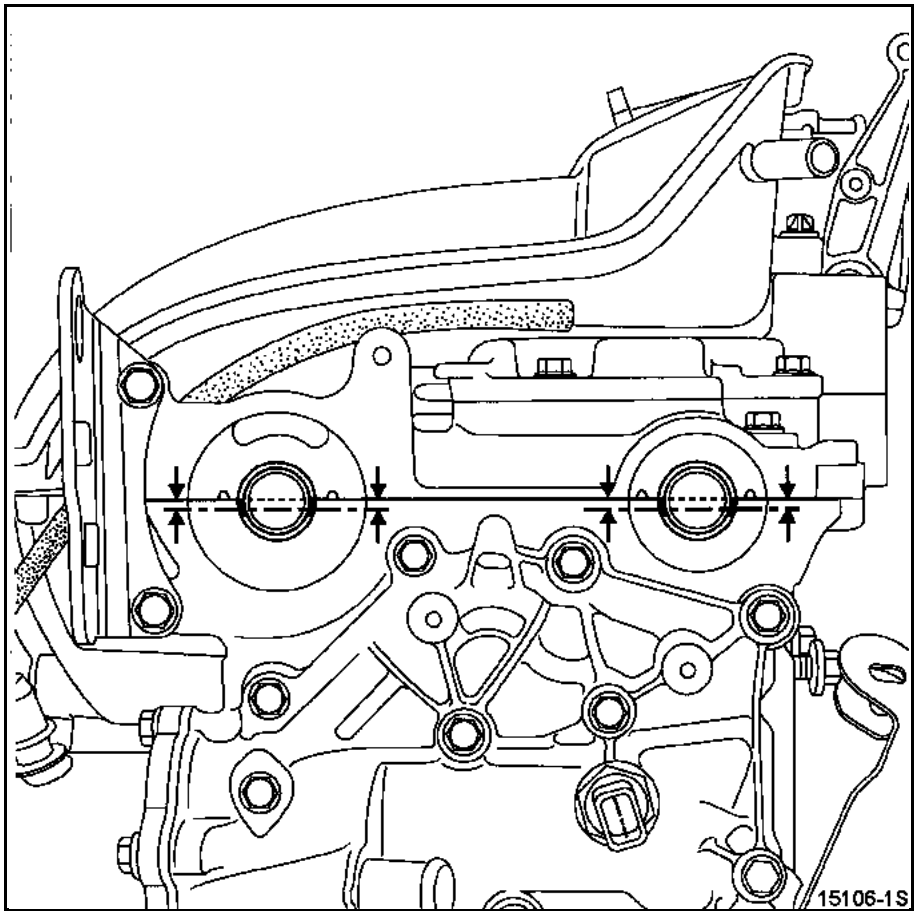

Correct position

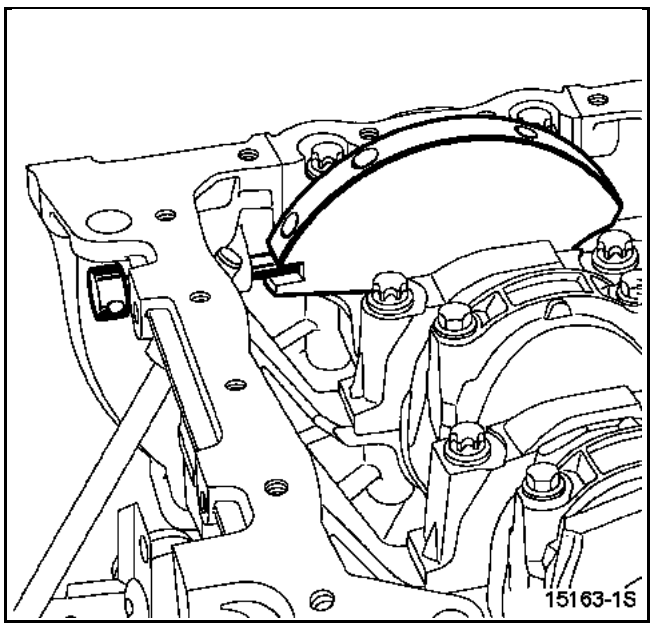

Incorrect position (the pin is in the balancing hole)

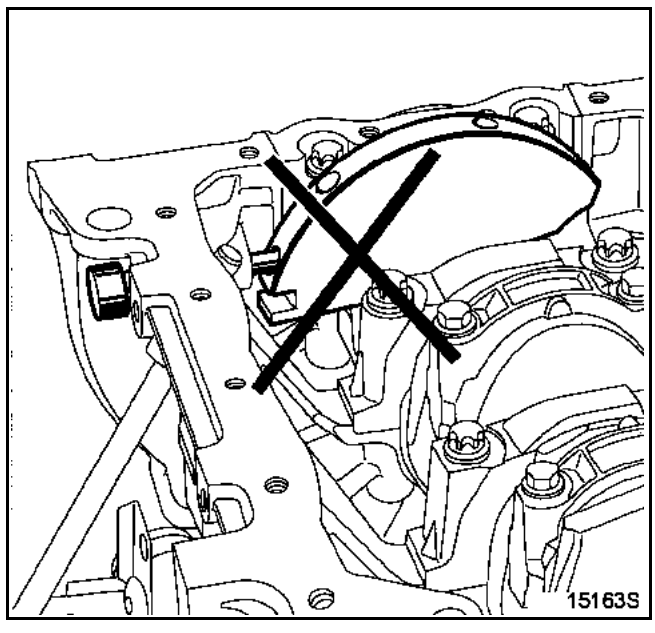

GETtheMANUALS.org

Remove:
– the crankshaft pulley, locking the flywheel using a screwdriver,

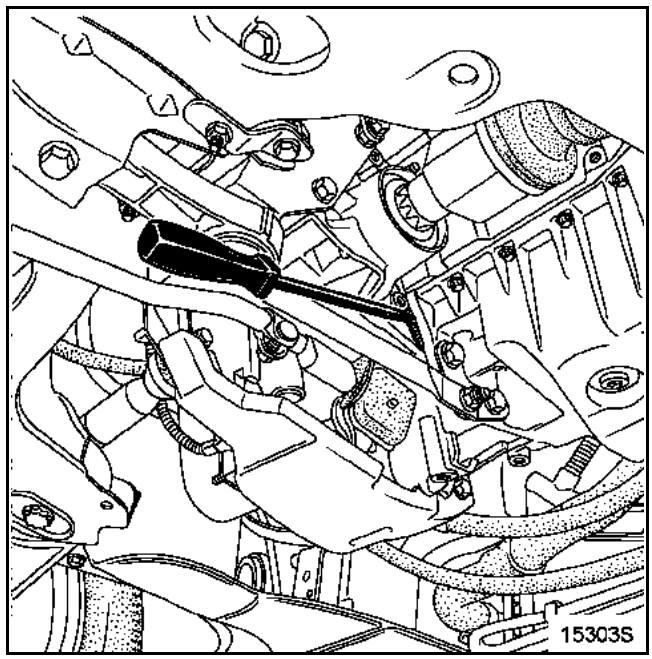

– the intermediate timing housing (1),
– the upper housing (2).

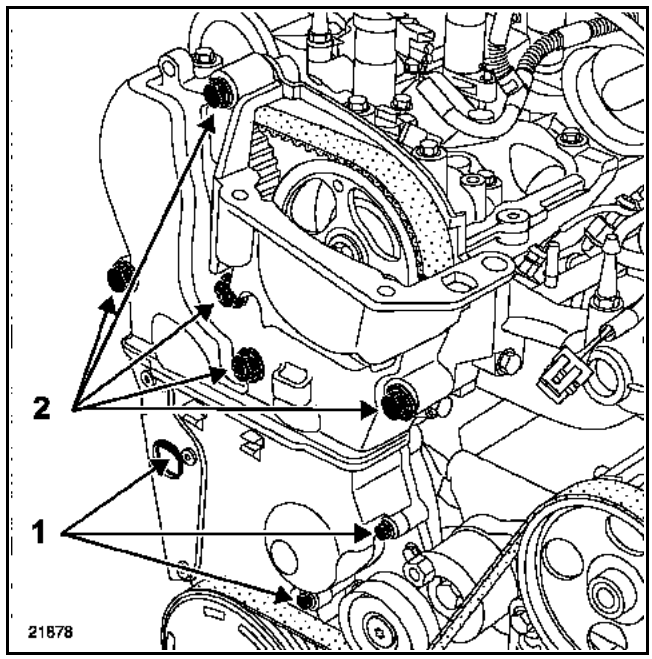

GETtheMANUALS.org

Slacken the timing belt by undoing the nut (1) of the tension wheel.

To remove the timing belt, remove the fixed roller (2) **taking care not to drop the crankshaft sprocket (as this does not have a key)**.

Remove the crankshaft timing sprocket.

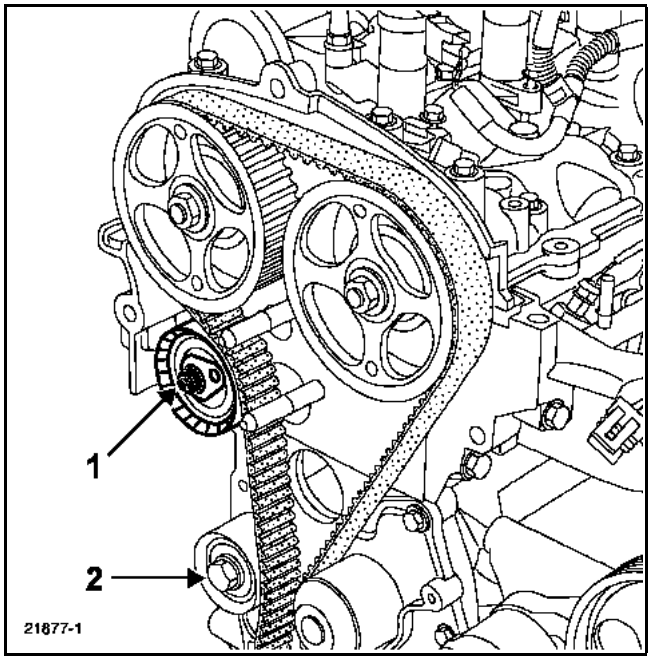

GETtheMANUALS.org

REFITTING

Place tool **Mot. 1496** at the ends of the camshafts.

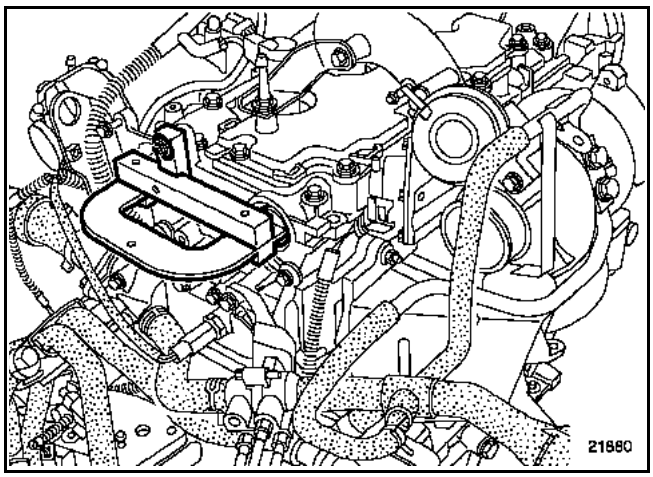

Check that the crankshaft is pinned to top dead centre and not in the balancing hole (crankshaft key (5) facing upwards).

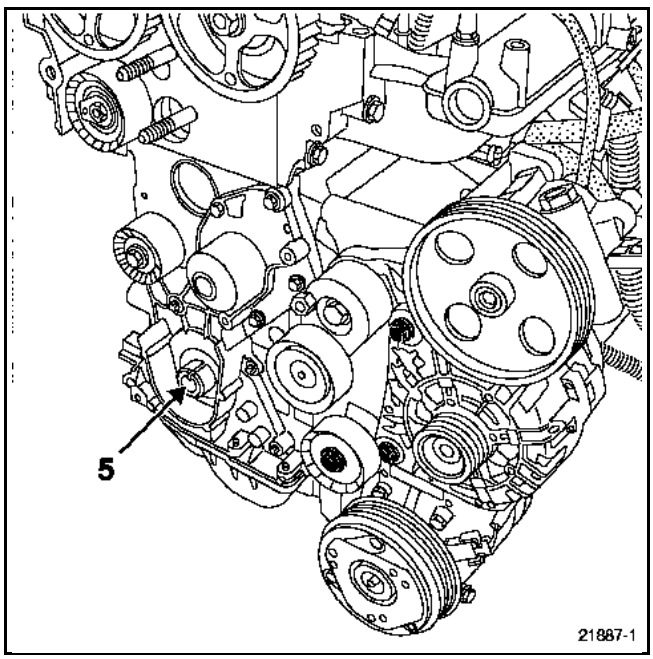

Incorrect position

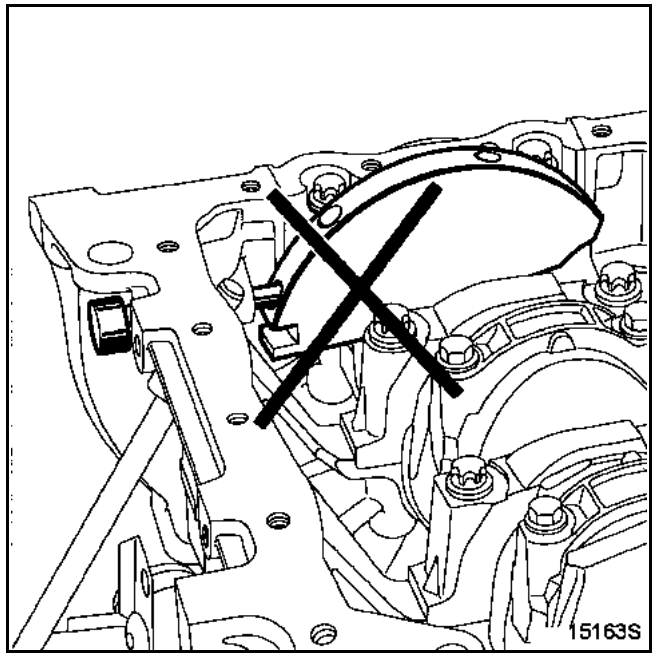

Pinned crankshaft

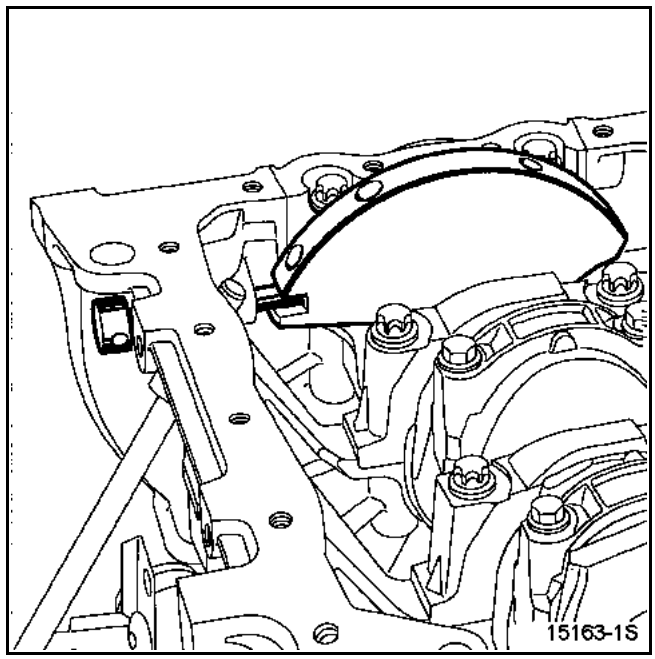

GETtheMANUALS.org

Method for unscrewing the outlet and inlet camshaft pulleys

The operation is carried out using **Mot. 1509**.

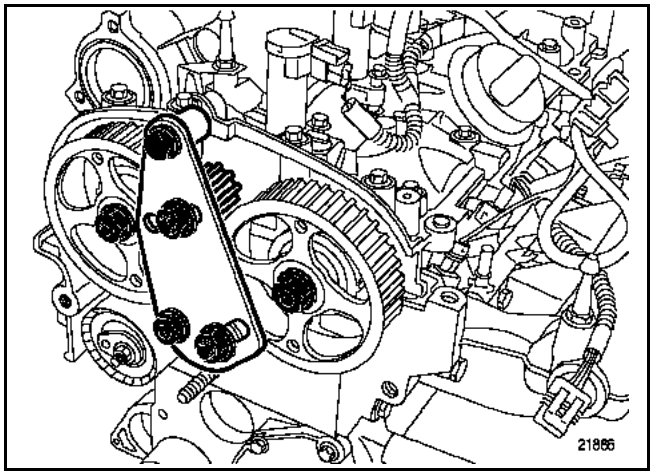

Fit the camshaft locking tool **Mot. 1509** and tighten the nuts (8) to a torque of **8 daNm**.

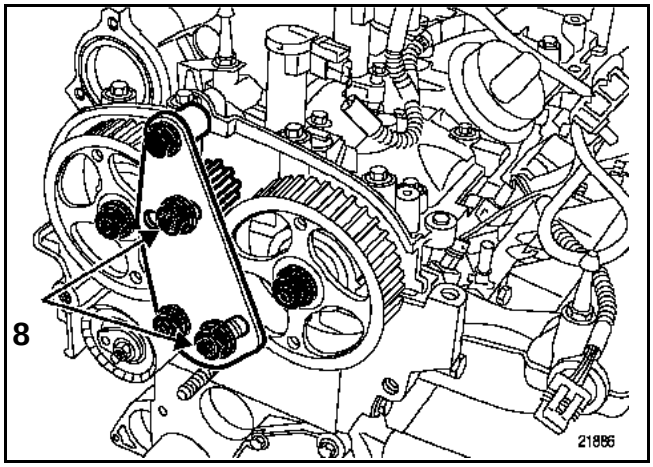

Remove the nuts (1) from the outlet and inlet pulley.

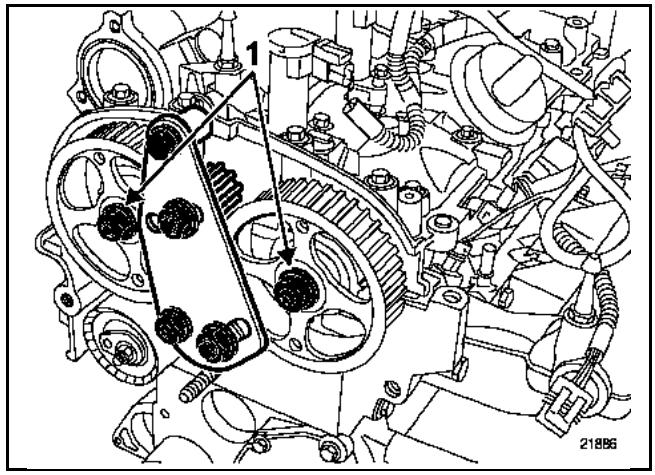

Remove tool **Mot. 1509**.

GETtheMANUALS.org

The tension wheel and the fixed roller must be replaced when the timing belt is replaced.

Ensure that the lug (1) of the tension wheel is correctly positioned in the groove (2).

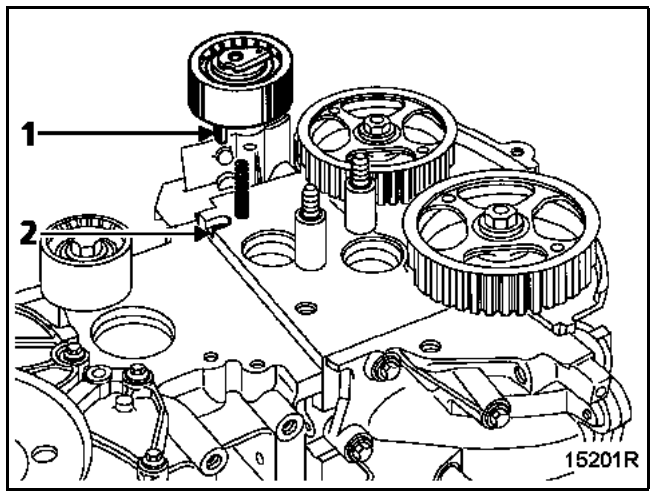

Refit:
– the timing belt,
– the fixed roller (3) and tighten the mounting bolt to a torque of **4.5 daNm**.

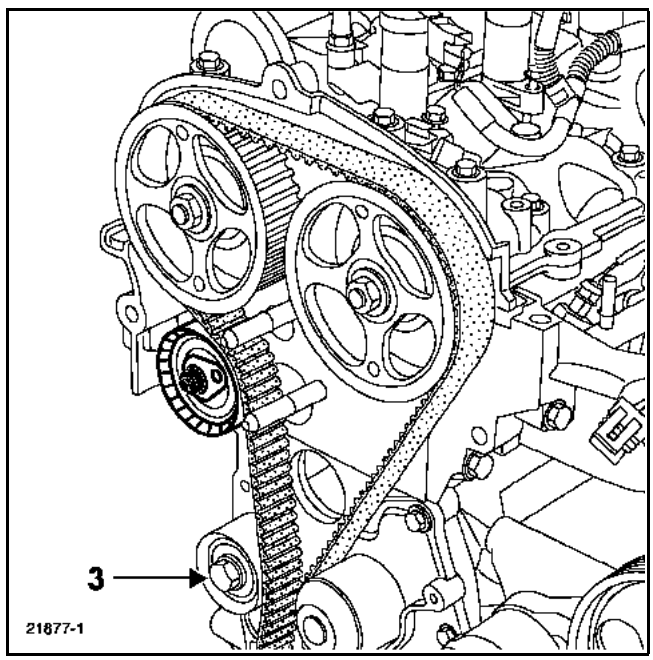

GETtheMANUALS.org

Belt tension

NOTE: do not turn the tension wheel in an anti-clockwise direction.

Align marks (6) and (7) of the tension wheel using a **6 mm** Allen key at (B).

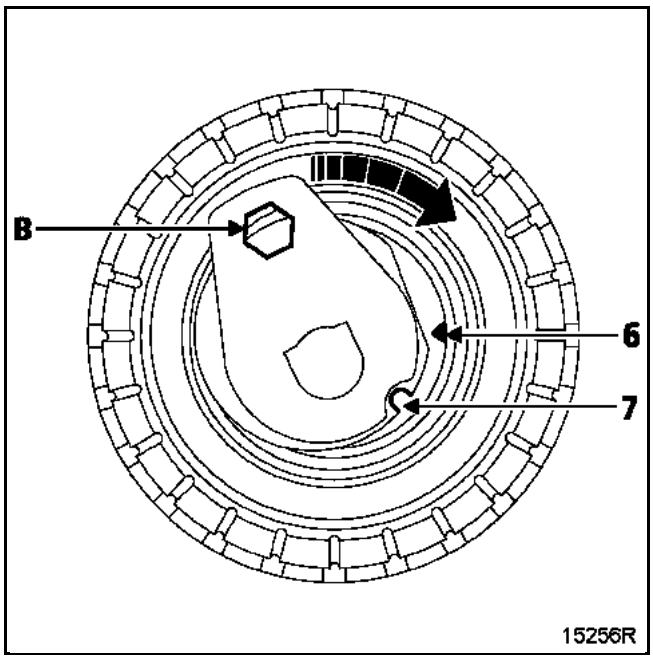

Pretighten the pulley nut to a torque of **0.7 daNm**.

Fit the camshaft pulley locking tool **Mot. 1509**.

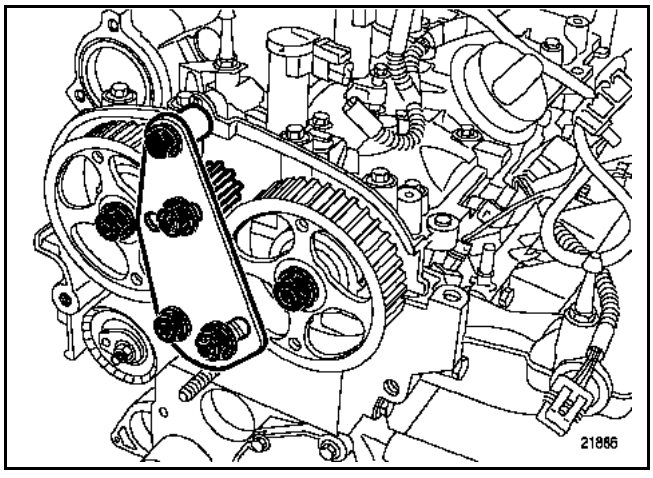

Pretighten the inlet and outlet camshaft pulley nuts to a torque of **3 daNm**.

Remove tools **Mot. 1509** and **Mot. 1496**.

Make a pencil mark (C) between the camshaft pulleys and the camshaft bearing.

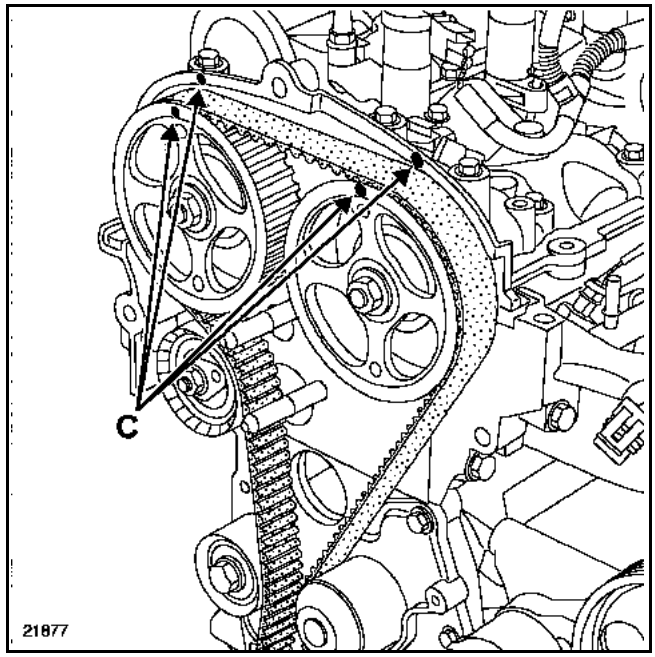

REMOVE THE TDC PIN

Rotate the engine twice in a clockwise direction.

GETtheMANUALS.org

Checking the timing and the tension

Checking the tension:

Rotate the crankshaft twice in a clockwise direction (timing end) and before the end of the second turn (in other words, half a tooth before the marks made previously are aligned), insert the crankshaft Top Dead Centre pin (so as to be between the balancing hole and the pinning hole) then move the timing to its setting point.

Before pinning

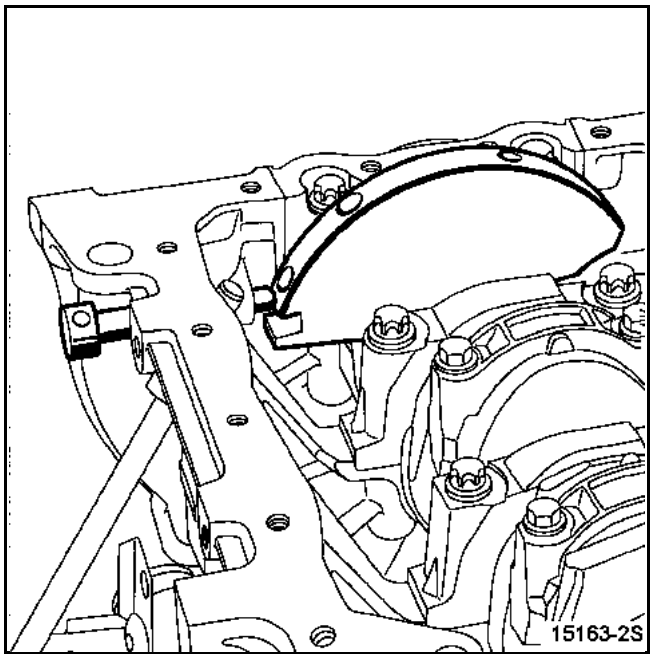

Pinned crankshaft

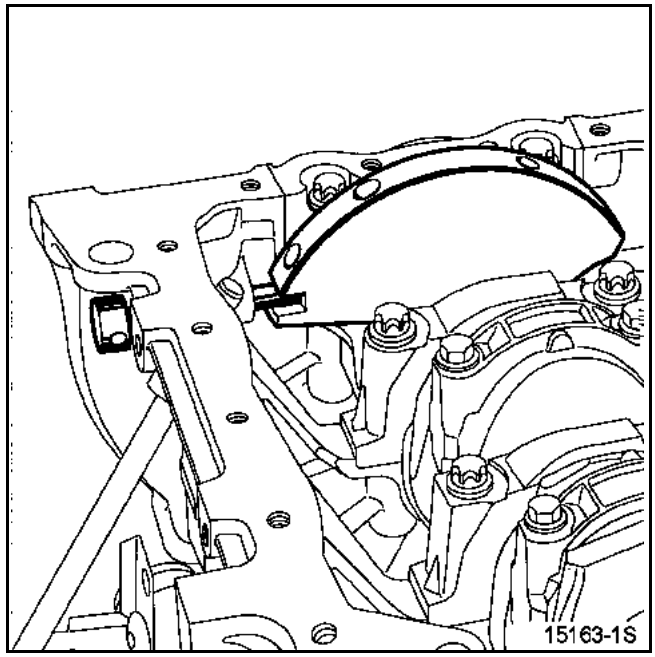

Remove the Top Dead Centre pin.

Check that the tension wheel marks are correctly aligned, otherwise repeat the tensioning procedure.

Slacken the tension wheel nut by a maximum of one turn, holding it with a **6 mm** Allen key.

Align the tension wheel marks and tighten the nut finally to a torque of **2.8 daNm**.

GETtheMANUALS.org

Fit the camshaft locking tool **Mot. 1509** and tighten the nuts (8) to a torque of **8 daNm**.

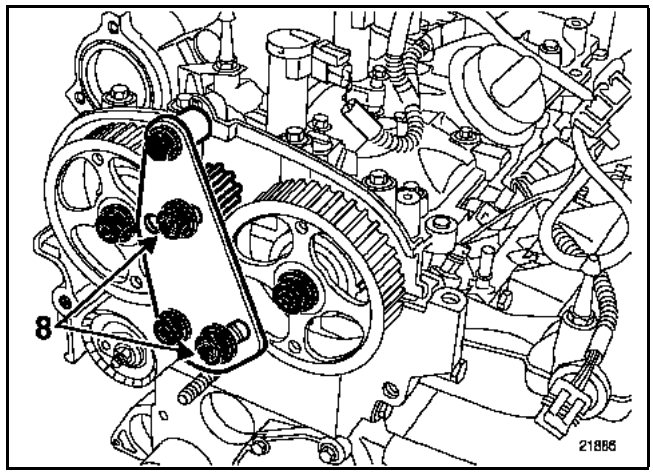

Take out the old pulley nuts and replace them with new ones.

Tighten the outlet and inlet camshaft pulley nuts to a torque of **3 daNm then turn them through an angle of 86 ± 16°**.

Remove the camshaft pulley locking tool **Mot. 1509** and the TDC pin **Mot. 1054**.

GETtheMANUALS.org

Checking the timing

Ensure that the tension wheel marks are in the correct position before checking the timing.

Fit the Top Dead Centre pin (check that the marks made previously on the camshaft pulleys are aligned).

Fit (without forcing) tool **Mot. 1496** for setting the camshafts (the camshaft grooves must be horizontal and offset towards the bottom). The timing setting and tensioning procedure must be repeated if the tool does not engage.

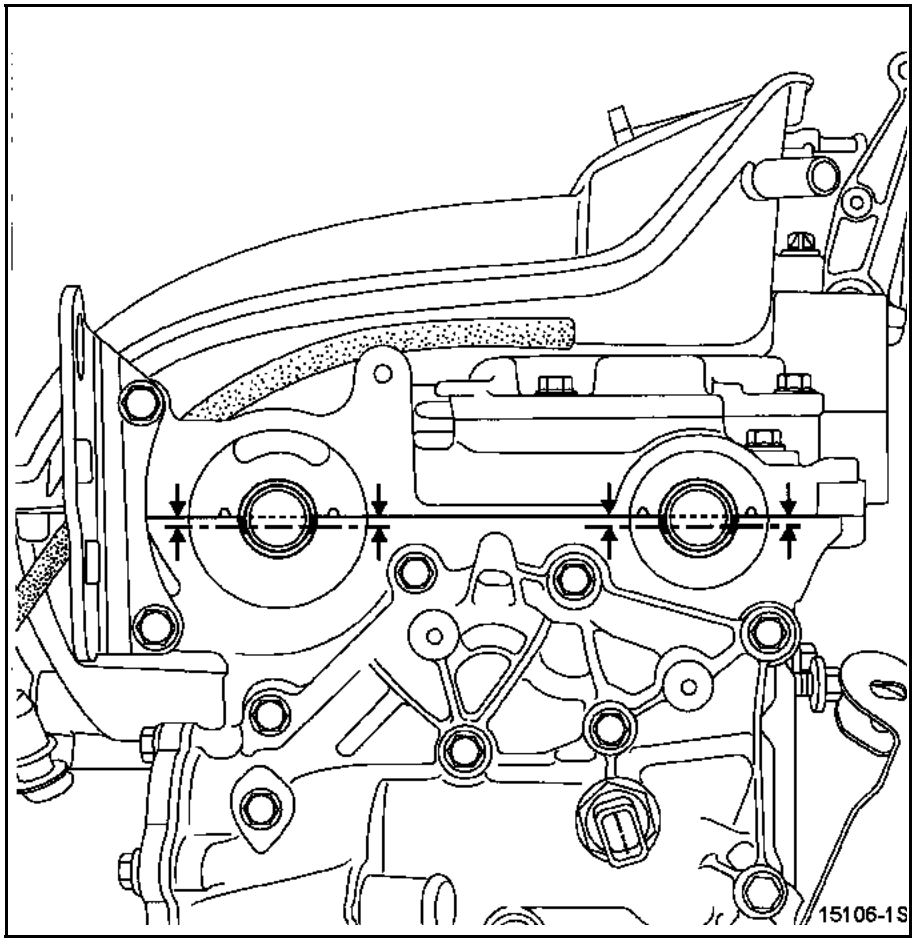

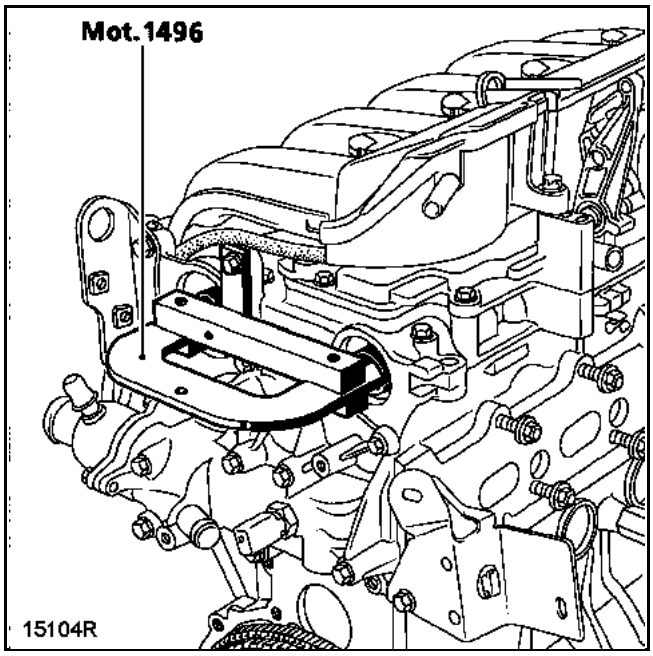

GETtheMANUALS.org

Refit:
– the lower timing cover,
– the upper timing cover,
– the crankshaft accessories pulley.

Lock the flywheel using a large screwdriver, then turn the bolt of the crankshaft accessories pulley though an angle of **115° ± 15°**.

NOTE:
The crankshaft accessories pulley bolt can be reused if the length under its head does not exceed **49.1 mm** (otherwise replace it),
Do not oil the new bolt. However, the bolt must be oiled on the threads and under the head if it is being reused.

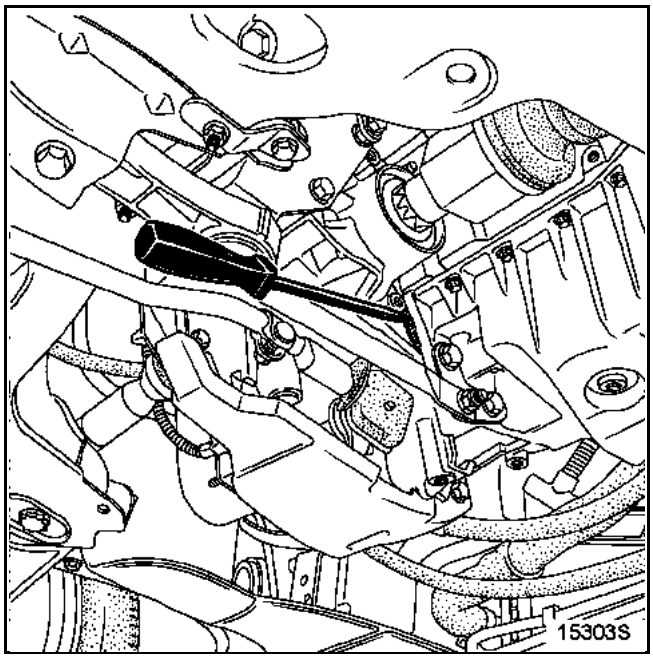

Refit:
– the accessories belt (see **section 07A "Timing belt tensioning procedure"**),
– the plug of the Top Dead Centre pin, applying a drop of **RHODORSEAL 5661** to the thread,
– the new sealing plugs:
  ● of the inlet camshaft **(Mot. 1487)**,
  ● of the outlet camshaft **(Mot. 1488)**.

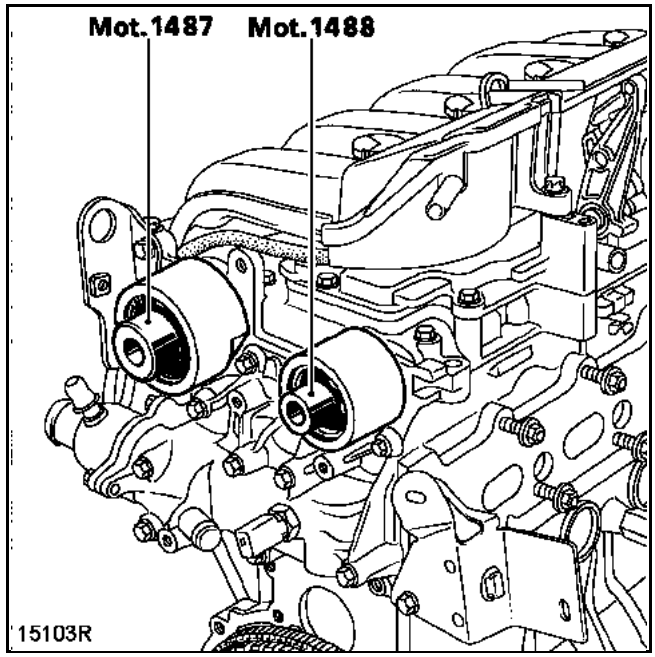

– the right-hand suspended engine mounting by tightening it to the correct torque (see **section 19D "Suspended engine mounting"**).

GETtheMANUALS.org

SPECIAL TOOLING REQUIRED	
Mot. 1534	Inlet camshaft adjustment tool
Mot. 1537	Outlet camshaft adjustment tool
Mot. 1536	TDC setting pin
Mot. 1367-02	Engine support tool

TIGHTENING TORQUES (in daNm and/or °)	
Tension wheel nut	2.5
TDC pin hole bolt	2.2
Mounting bolts on the engine for suspended engine mounting cover	6.2
Body mounting bolt for the suspended engine mounting movement limiter	10.5
Wheel bolt	11

REMOVAL

Put the vehicle on a two-post lift.

Disconnect the battery.

Remove:
– the engine undertray,
– the engine cover,
– the front right wheel and the wheel-arch liner.

Fit the engine mountings **Mot. 1367-02**.

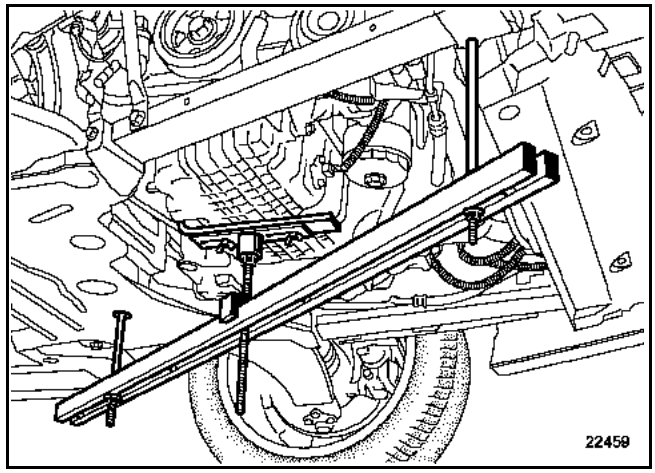

Remove the front right suspended mounting.

Unclip the turbocharger adjustment solenoid valve from its bracket.

Remove:
– the rubber mounting bracket,
– the acoustic earth and its side member bracket.

GETtheMANUALS.org

– the lifting ring (1),

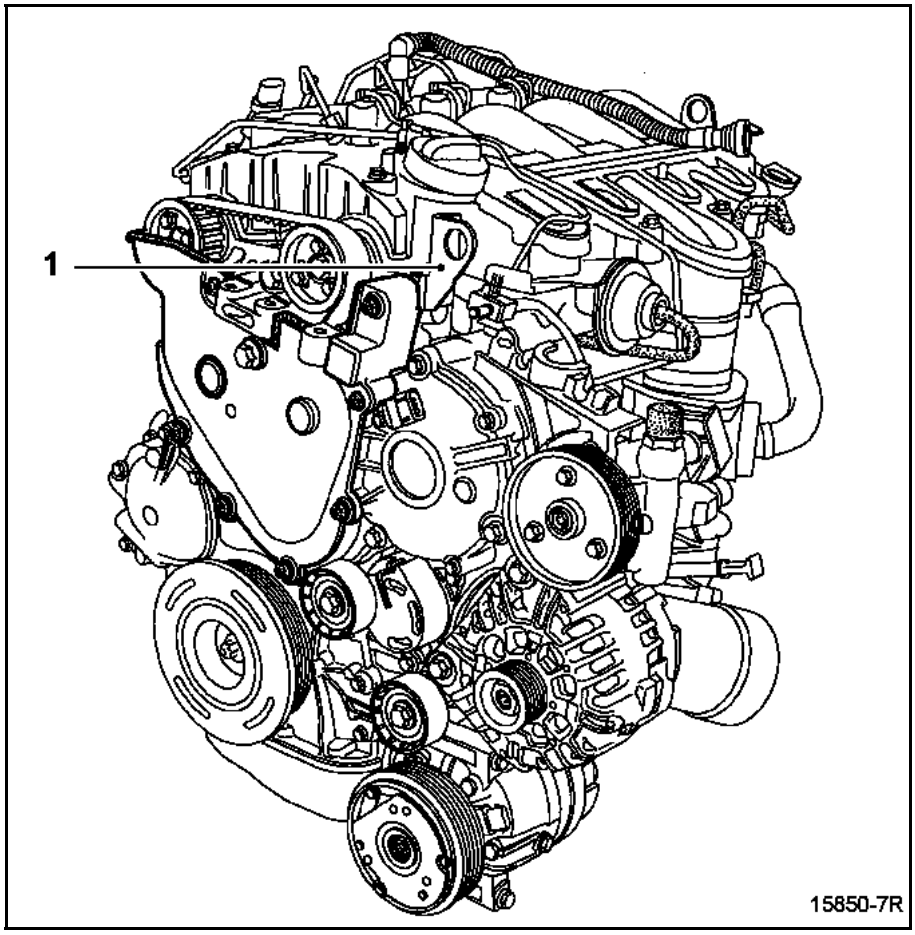

– the valve timing cover (2),
– the cylinder head suspended mounting,
– the cylinder marking sensor (3).

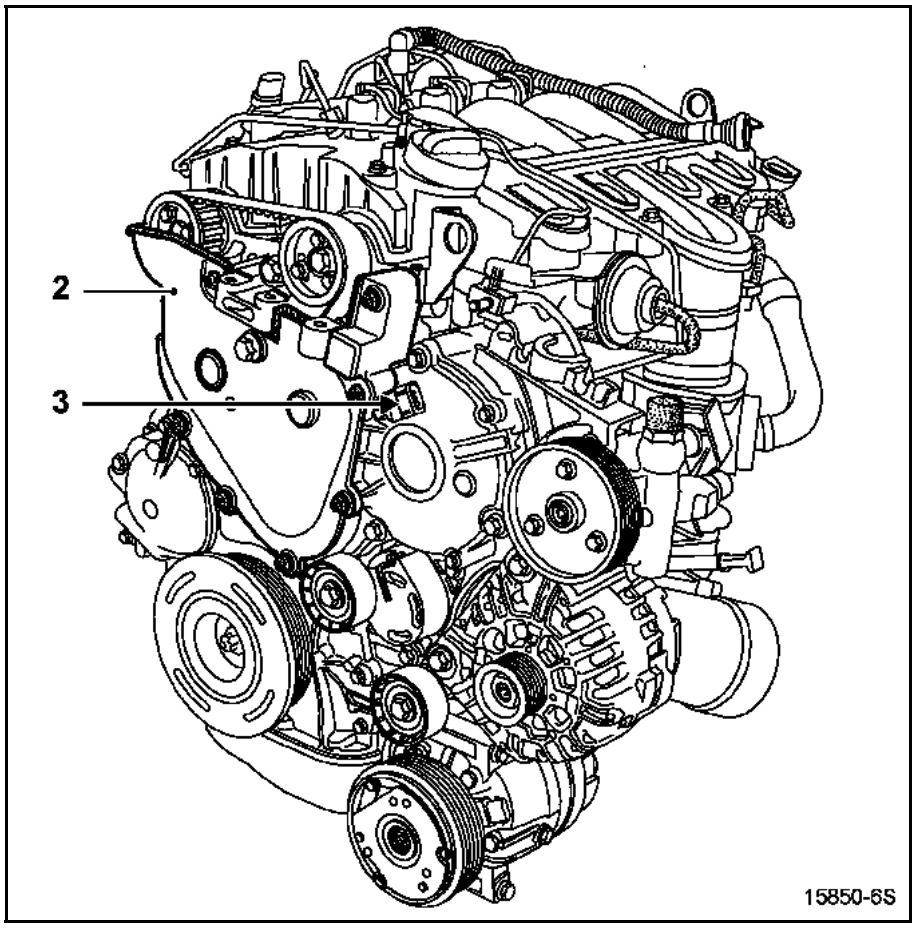

GETtheMANUALS.org

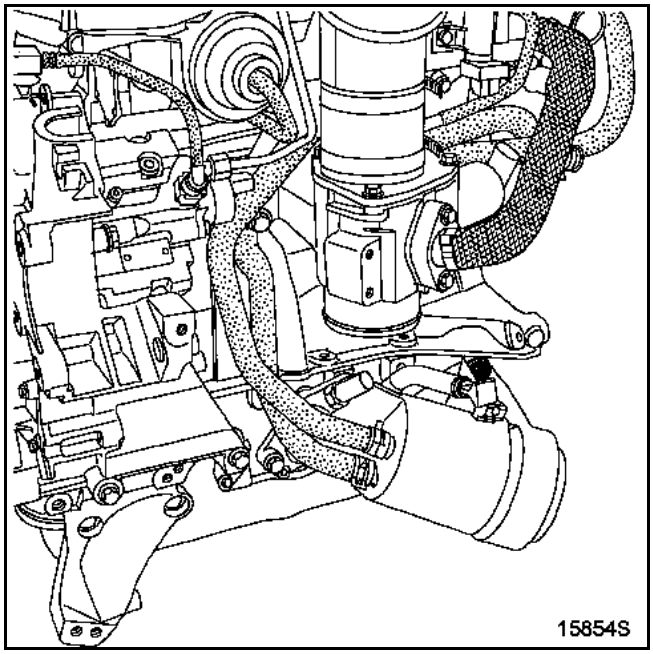

Remove the Top Dead Centre pin plug.

METHOD FOR ADJUSTING TIMING AT THE SETTING POINT

Position the top dead centre mark (1) on the crankshaft accessories belt pulley almost in line with the engine vertical as shown in the illustration below.

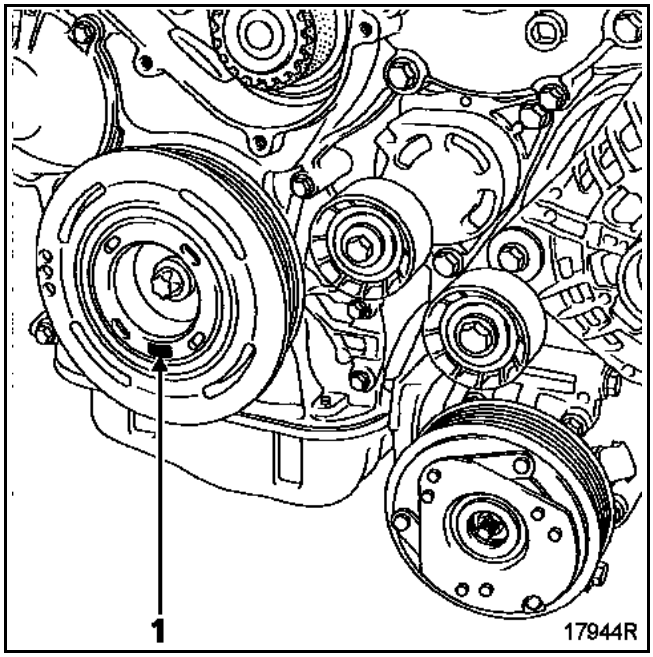

Fit the top dead centre pin **Mot. 1536**.

Turn the engine clockwise (timing side), pressing down on the TDC pin **Mot. 1536** until it reaches the timing setting point.

The camshaft grooves should be vertical as shown on the following diagram.

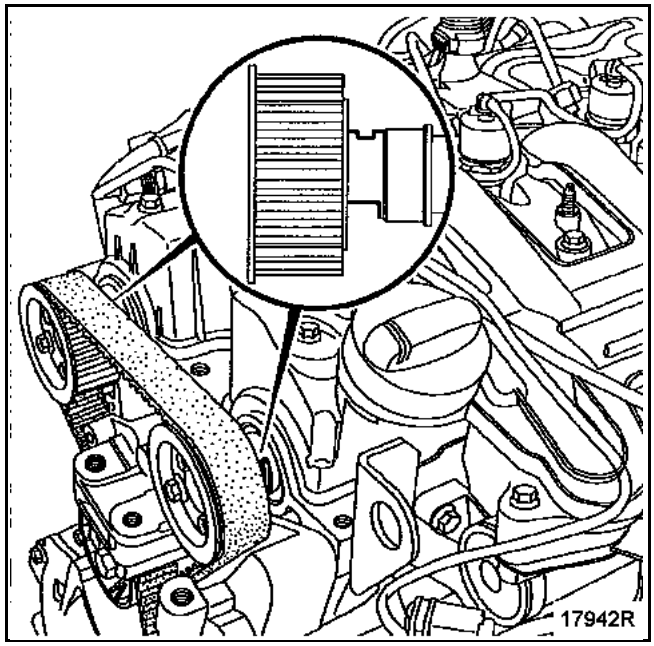

GETtheMANUALS.org

The inlet and outlet camshafts are adjusted using tools **Mot. 1534** and **Mot. 1537**.

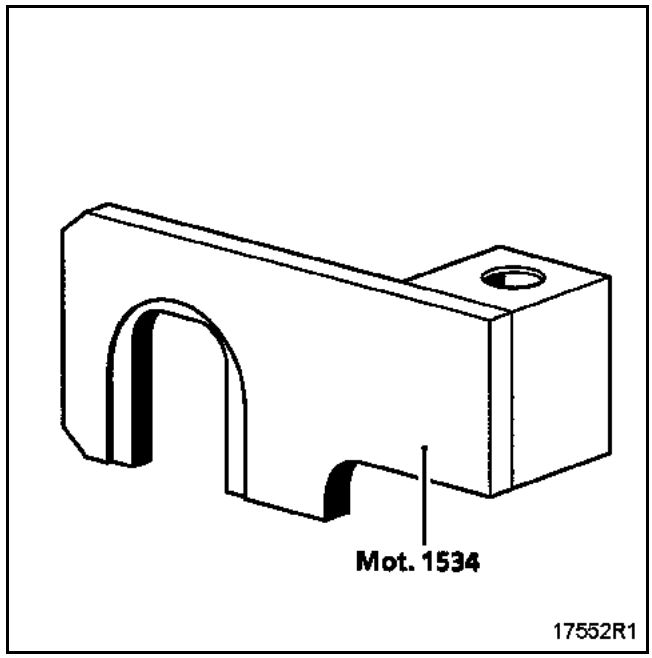

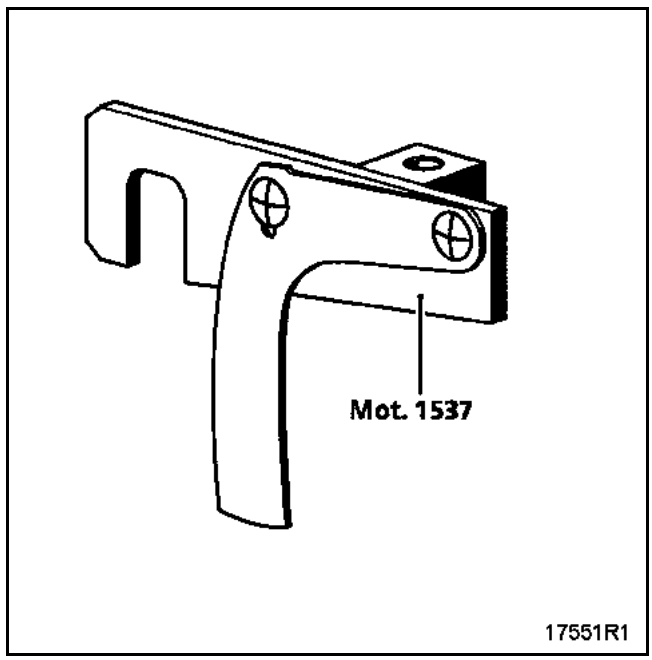

Place **Mot. 1534** and **Mot. 1537** in the camshaft grooves as recommended.

GETtheMANUALS.org

For the inlet camshaft:

Position **Mot. 1534** and finger-tighten the bolt (1).

Loosen the three camshaft sprocket bolts by a maximum of one turn.

Turn the inlet camshaft clockwise with the hub mounting bolt (3) (using a **16 mm** box spanner) so that the **Mot. 1534** tool is flat against the cylinder head, then tighten the bolt (1) of **Mot. 1534**.

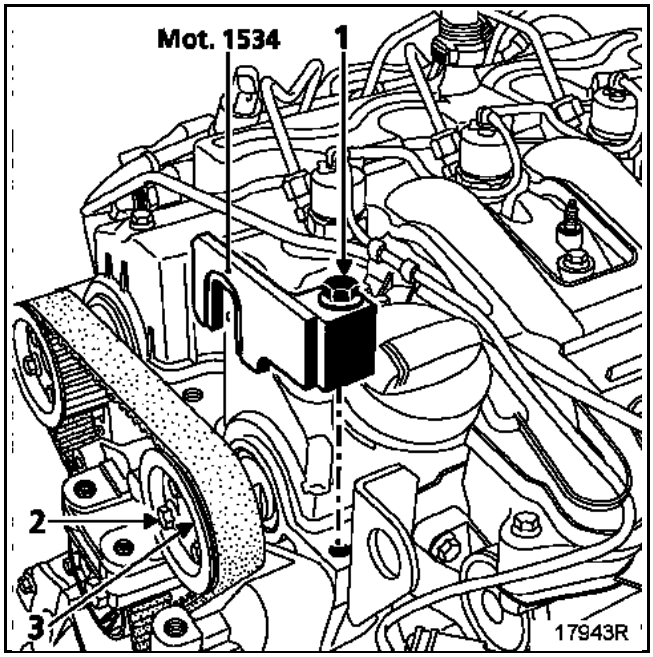

For the outlet camshaft:

Set **Mot. 1537** by finger-tightening the bolt (4).

Loosen the three camshaft sprocket bolts (5) by up to one turn.

Turn the outlet camshaft clockwise with the hub mounting bolt (6) (using a **16 mm** box spanner) so that the **Mot. 1537** tool is flat against the cylinder head, then tighten the bolt (4) of **Mot. 1537**.

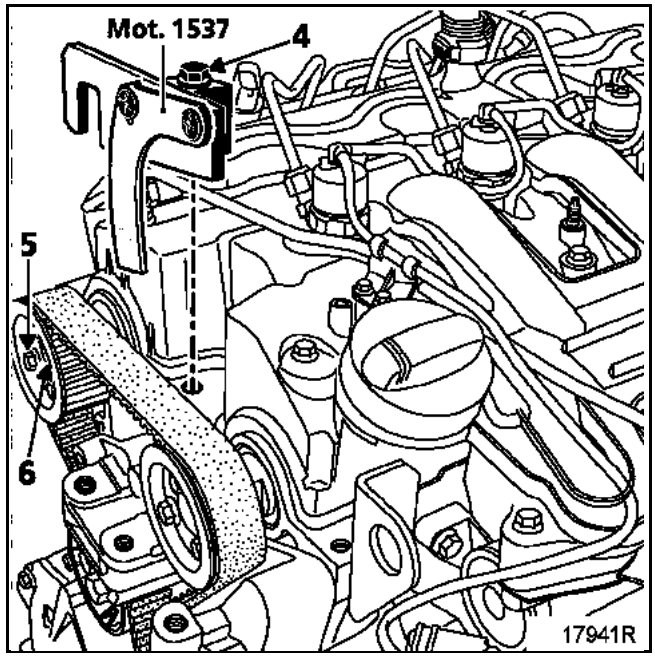

GETtheMANUALS.org

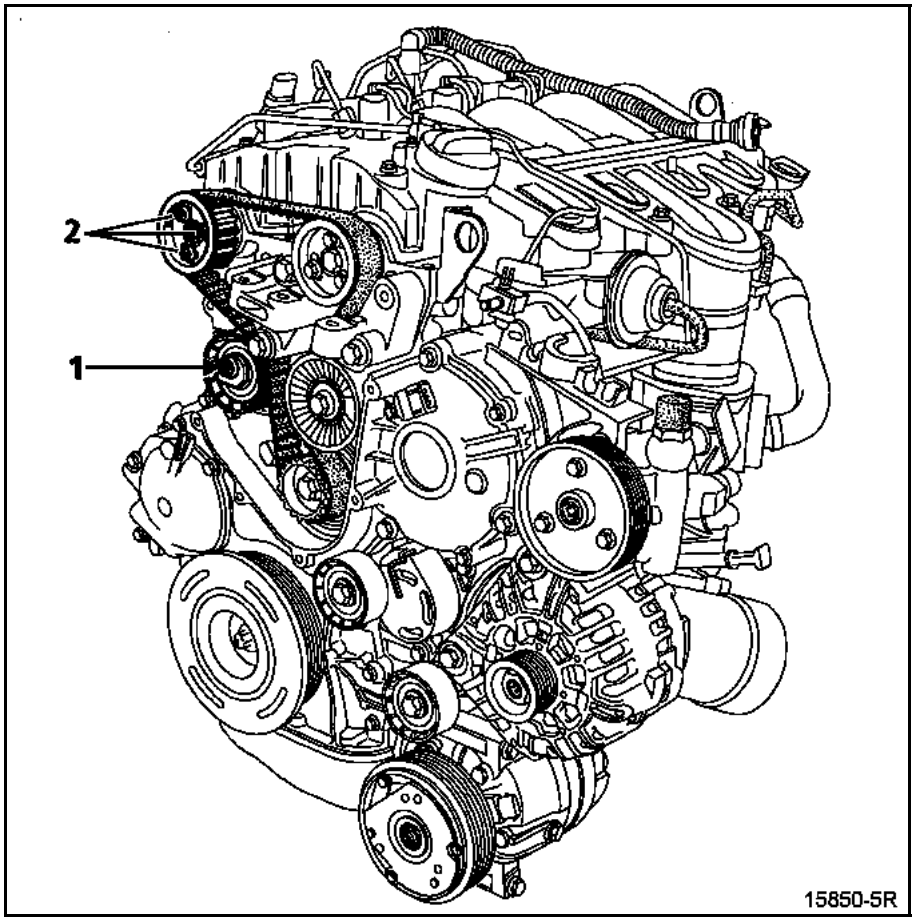

Slacken the timing belt by undoing the tension wheel bolt (1).

Remove:
– the three bolts (2), then take out the sprocket from the outlet camshaft,
– the timing belt.

GETtheMANUALS.org

REFITTING

TIMING ADJUSTMENT METHOD

Pin the crankshaft to top dead centre (the top dead centre mark on the crankshaft accessories pulley must be in the vertical axis of the engine).

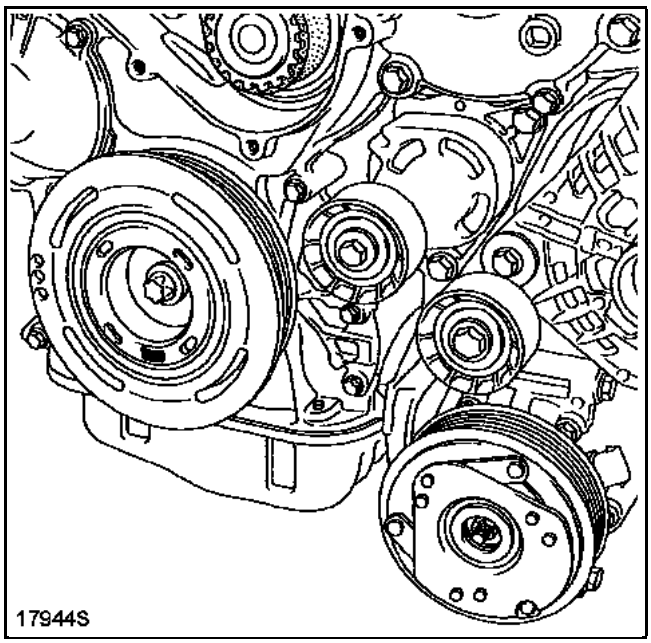

Loosen the three camshaft timing sprocket bolts by a maximum of one turn.

GETtheMANUALS.org

Set the timing belt, starting with the intermediate sprocket (1), the fixed roller (2), the outlet camshaft sprocket (try to keep the bolts in the middle of the sprocket lights) and the tension wheel (3).

Put the outlet camshaft sprocket on the belt, then place it on the camshaft hub, while trying to keep the bolts in the middle of the sprocket lights.

Replace the three sprocket mounting bolts without tightening them.

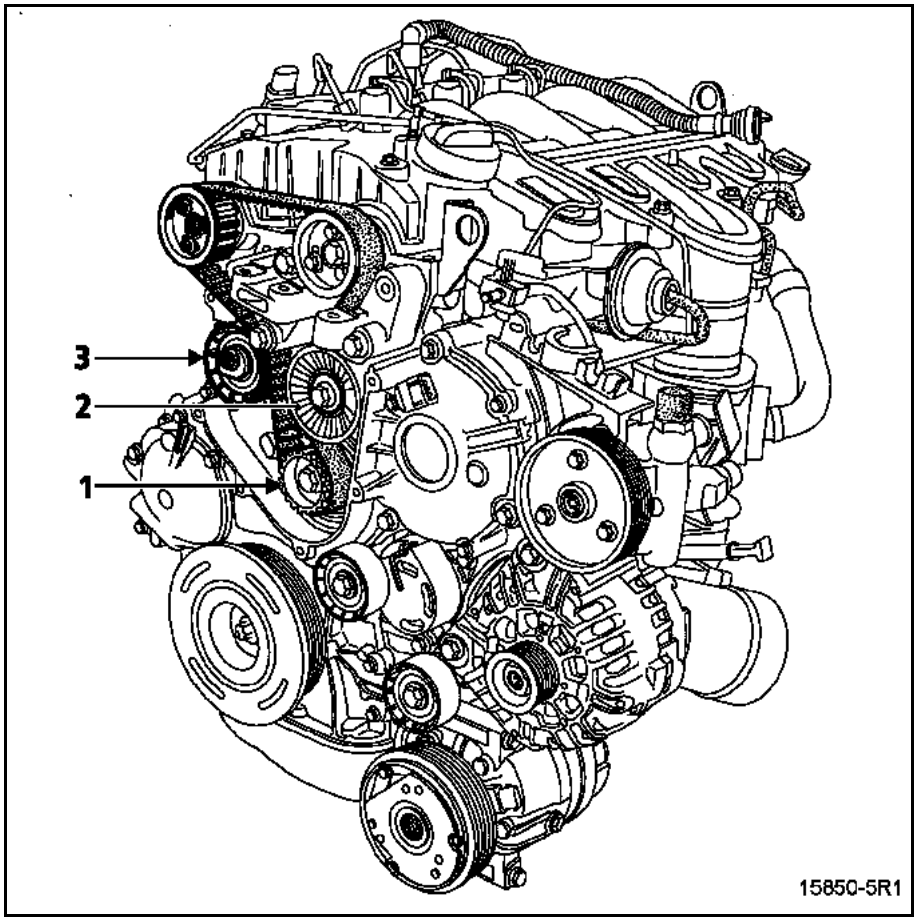

GETtheMANUALS.org

TIMING BELT TENSION

Check that the tab (1) of **Mot. 1537** moves vertically without constraint.

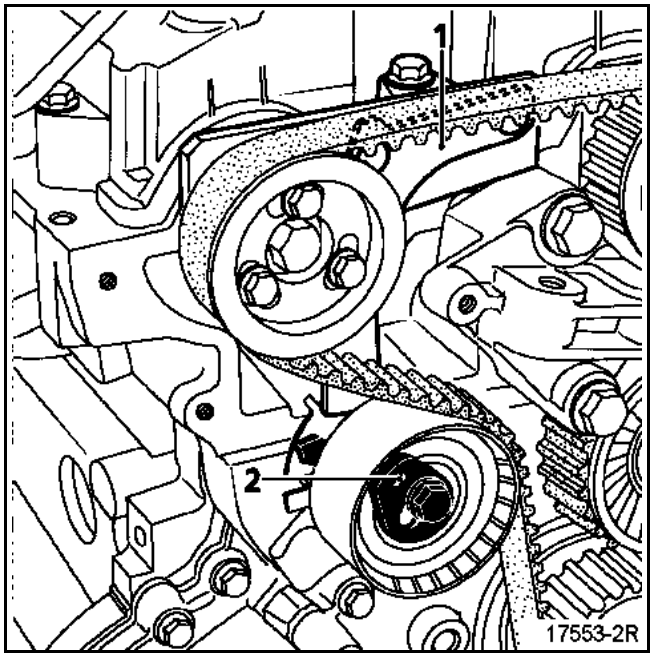

Put a **6 mm** Allen key in the hole (2) of the tensioner wheel eccentric.

Pivot the tension wheel eccentric anti-clockwise, until the surface (3) of the tab (1) is aligned with the upper surface (4) of **Mot. 1537**.

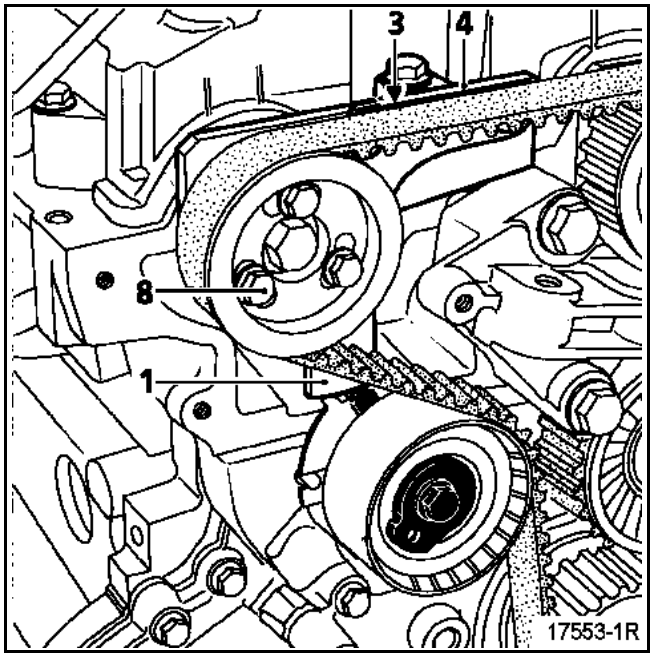

The movable index (5) of the tensioner wheel must be aligned with the prong (6).

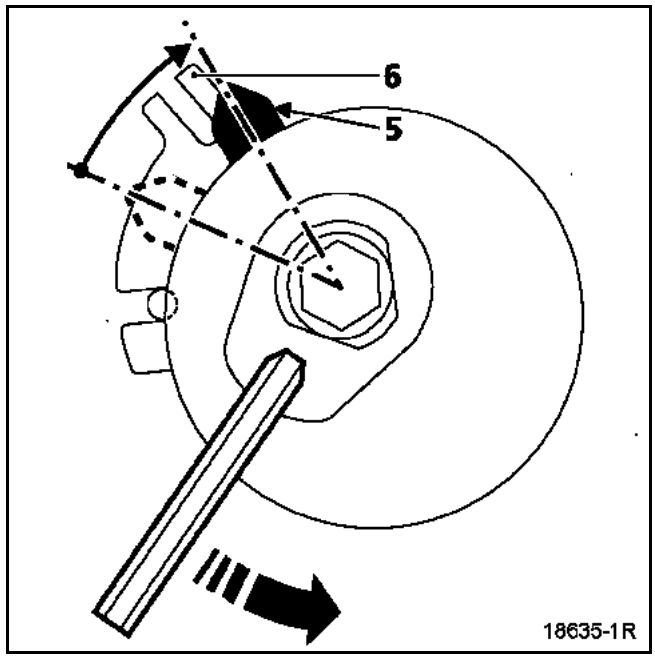

Check that the bolts (8) are not at the stop at the bottom of the camshaft timing pin lights.

Tighten:
– tension wheel bolt (7),
– the camshaft timing sprocket bolts (8) to a torque of **1 daNm**.

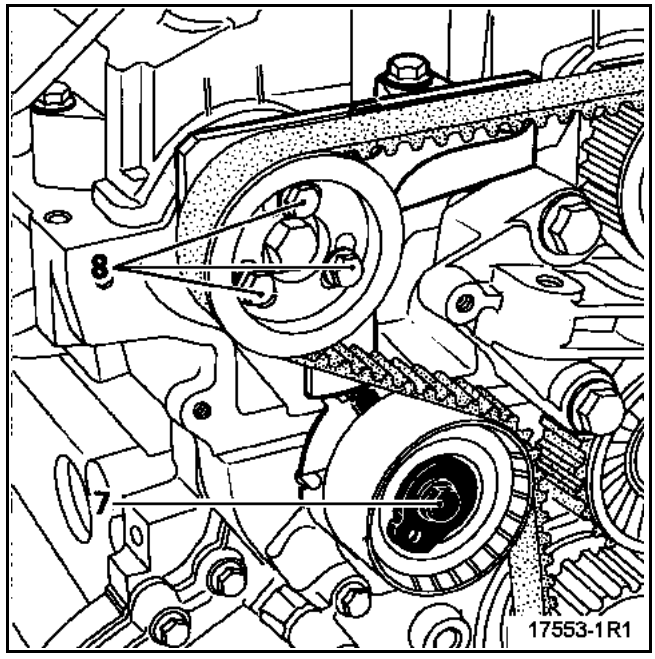

GETtheMANUALS.org

Remove timing tools **Mot. 1534** and **Mot. 1537**, and the TDC pin **Mot. 1536** from the camshafts.

Rotate the crankshaft through two revolutions in a clockwise direction on the timing side.

Pin the crankshaft to top dead centre (the top dead centre mark on the crankshaft accessories pulley must be on the vertical shaft of the engine).

For the inlet camshaft:

Position **Mot. 1534** and finger-tighten the bolt (1).

Loosen the three camshaft sprocket bolts by a maximum of one turn.

Turn the inlet camshaft clockwise with the hub mounting bolt (3) (using a **16 mm** tubular hexagon box spanner) in order to pin **Mot. 1534** to the cylinder head and lock the **Mot. 1534** bolt (1).

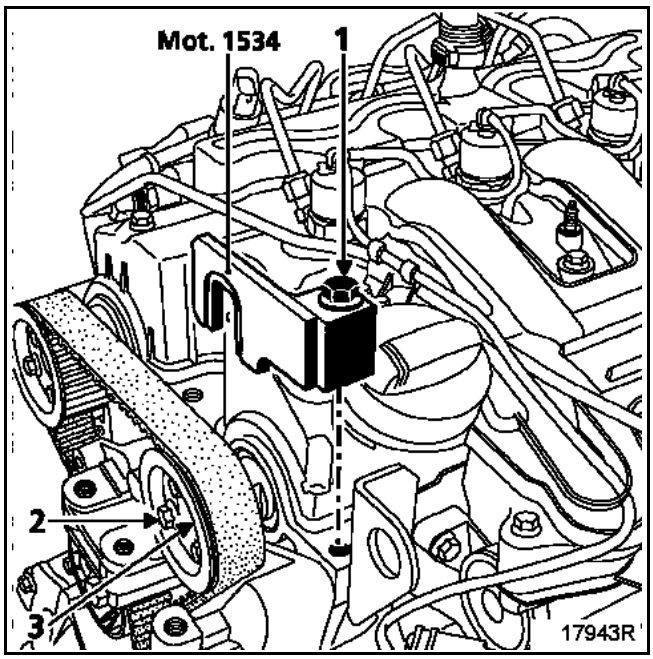

For the outlet camshaft:

Set **Mot. 1537** by finger-tightening the bolt (4).

Loosen the three camshaft sprocket bolts (5) by up to one turn.

Turn the outlet camshaft clockwise with the hub mounting bolt (6) (using a **16 mm** box spanner) so that the **Mot. 1537** tool is flat against the cylinder head, then tighten the bolt (4) of **Mot. 1537**.

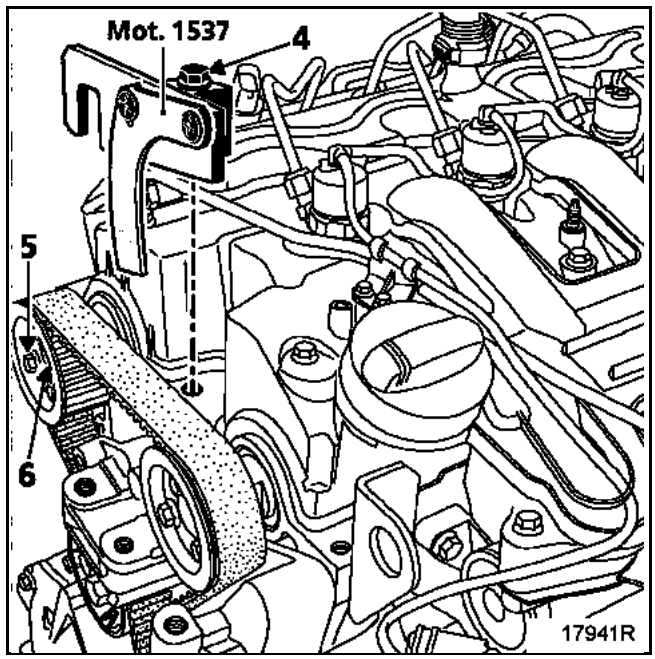

GETtheMANUALS.org

Checking the timing and the tension

Undo the tension wheel bolt (7) while holding the eccentric with a **6 mm** Allen key.

Turn the tension wheel eccentric clockwise until the face (9) of the tab (1) and the upper surface (4) of **Mot. 1537** are aligned.

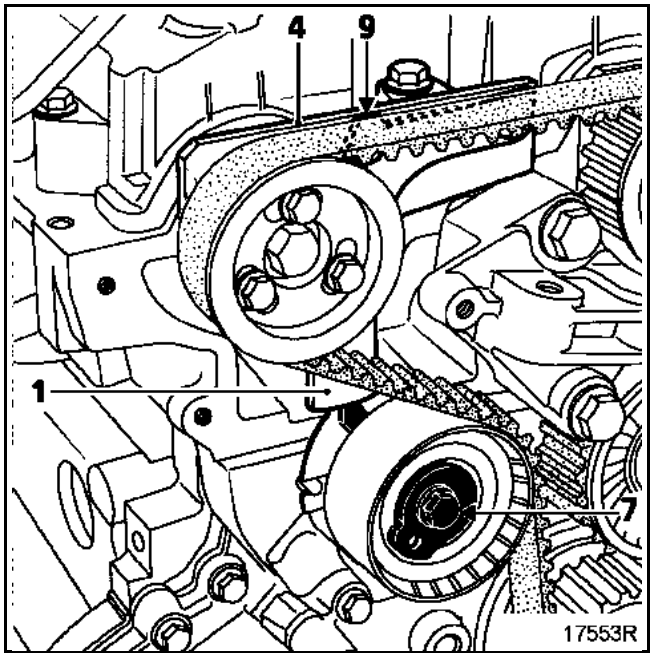

The pointer (5) of the tensioner wheel must be located in the middle of the groove (10).

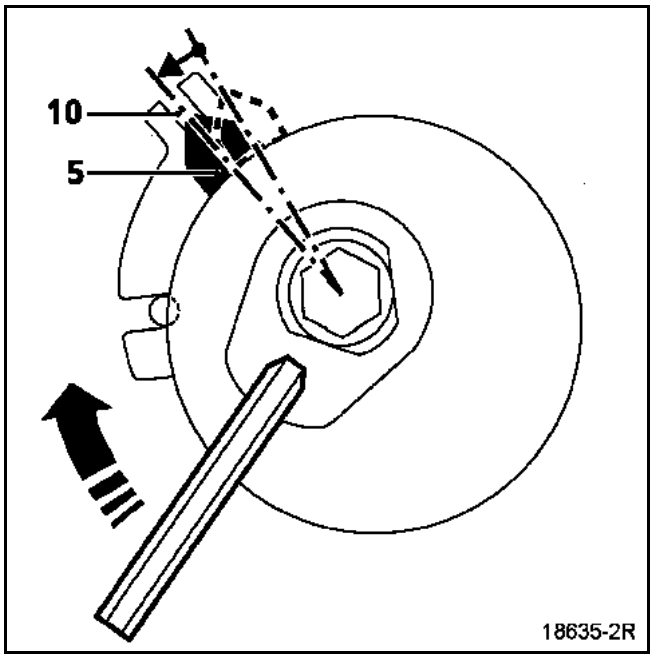

Tighten:
- the tension wheel bolt (7) to a torque of **2.5 daNm**,
- the camshaft timing sprocket bolts (8) to a torque of **1 daNm**.

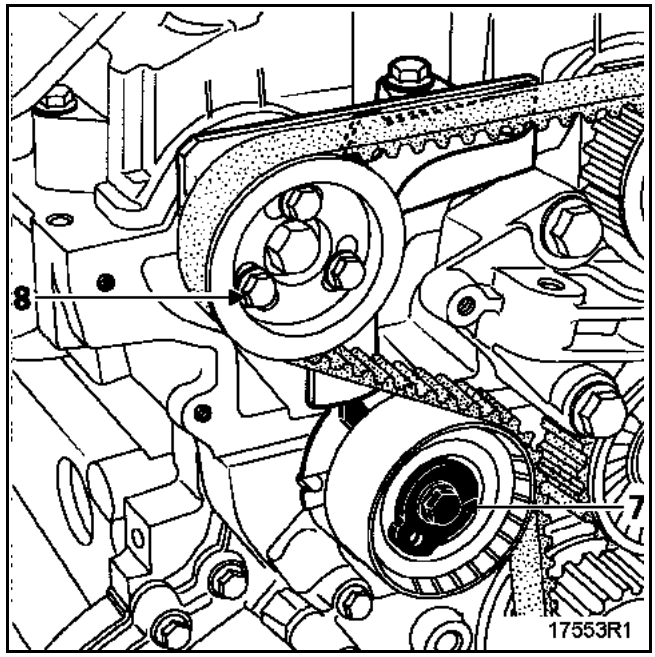

Remove the camshaft timing tools **Mot. 1534 and Mot. 1537** and the TDC pin **Mot. 1536**.

Refit the cap in the TDC pin opening applying **RHODORSEAL 5661** to the thread and by tightening to a torque of **2.2 daNm**.

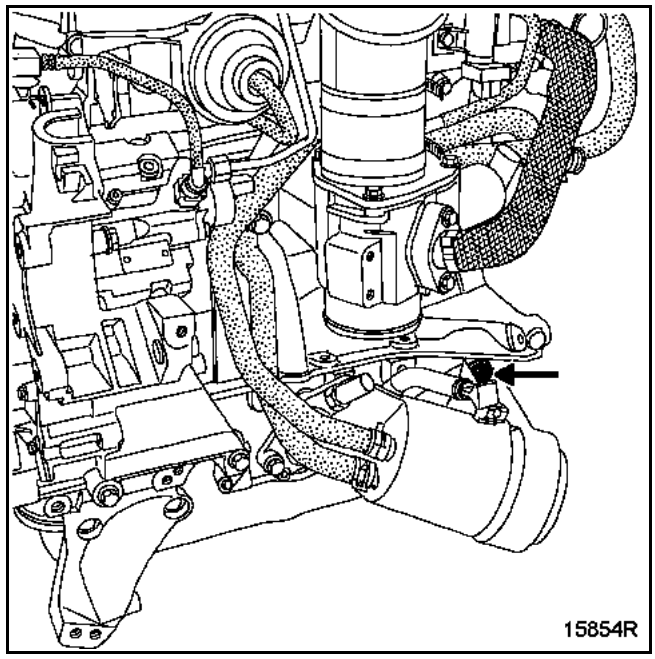

GETtheMANUALS.org

Refit:
– the timing housing, tightening the bolts to a torque of **1 daNm**,

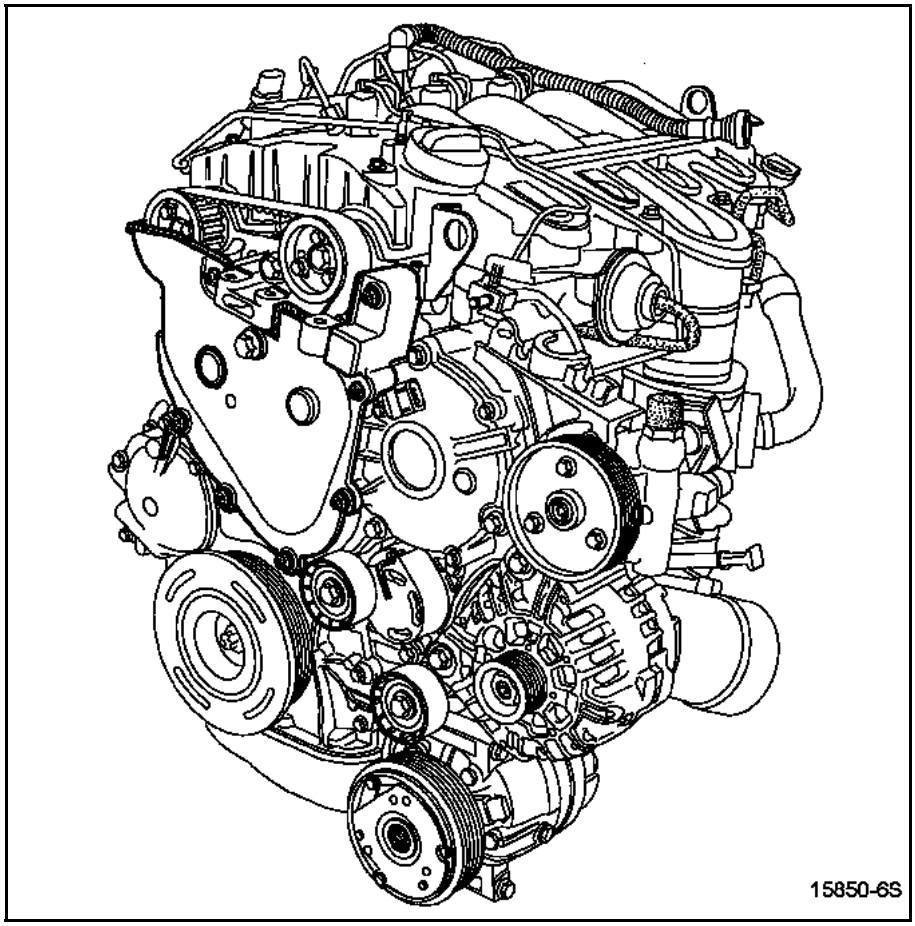

– the cylinder head suspended mounting by tightening the bolts to a torque of **2.5 daNm**.

Refitting is the reverse of removal.

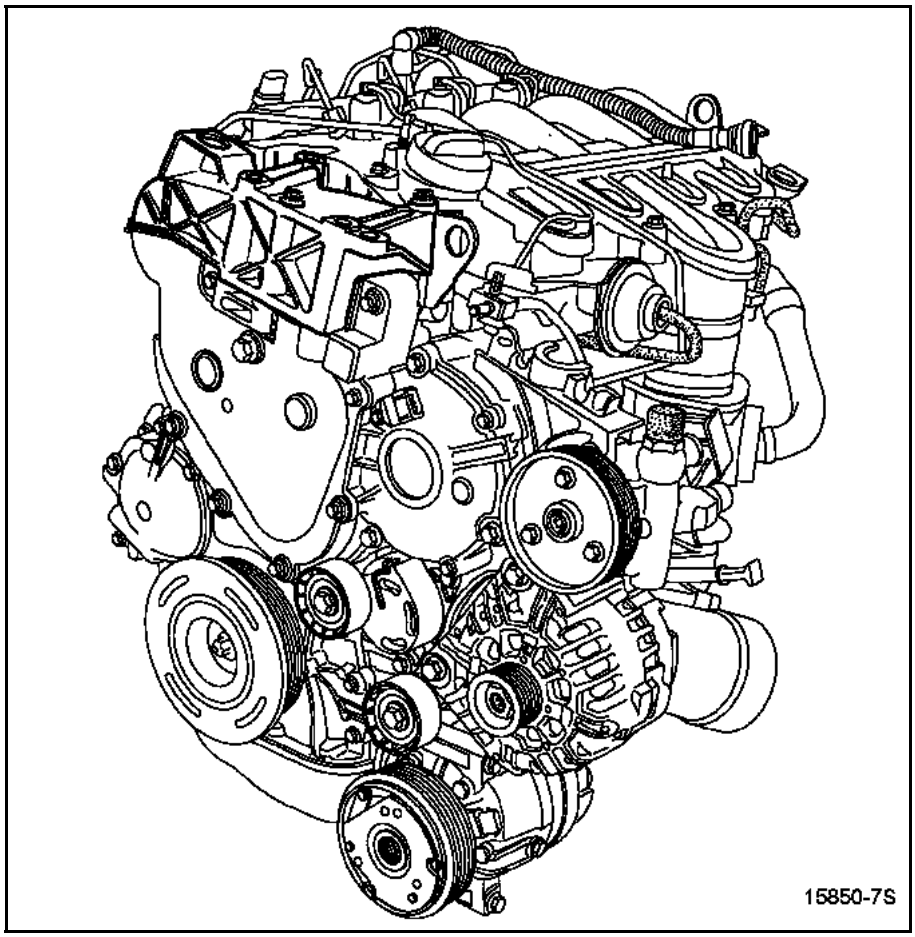

GETtheMANUALS.org

SPECIAL TOOLING REQUIRED	
Mot. 1376	Engine rotating locking pin
Mot. 1367-02	Tool for securing engine from underneath
EQUIPMENT REQUIRED	
Torque wrench	

TIGHTENING TORQUE (in daNm and/or °)	▽
Fixed roller bolt	5
Tension wheel bolt	4.3
Body mounting bolt for the suspended engine mounting movement limiter	10.5
Acoustic mass mounting bolt	2.1
Engine tie-bar mounting bolt: – on the sub-frame – on the engine	 10.5 18
Wheel bolt	11

REMOVAL

Put the vehicle on a two-post lift.

Remove the engine protections

Disconnect the battery.

Drain the oil from the engine.

Remove:
– the front right wheel,
– the front right-hand wheel arch liner;
– the front right-hand steering ball joint,
– the front right-hand lower ball joint at (1),
– the two bolts from the base of the front right shock absorber at (2),
– the brake caliper then attach it to the suspension spring at (3),
– the ABS sensor connector at (4),

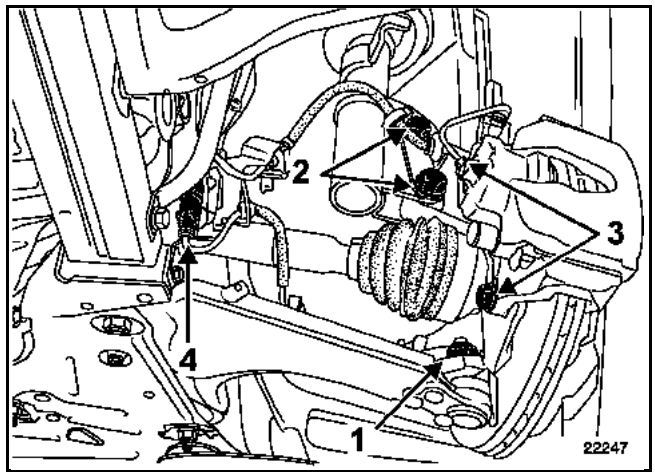

– the driveshaft relay bearing bracket,
– the front right driveshaft.

GETtheMANUALS.org

Fit the lower engine mountings tool **Mot. 1367-02**.

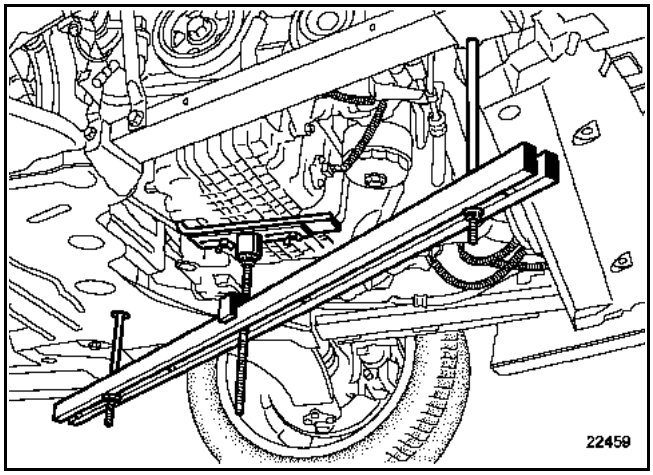

Remove:
- the front right suspended engine mounting and the acoustic earth,
- the diesel inlet and return pipes(5) on the filter,
- the electrical connector (6),
- the diesel filter.

Unclip the diesel supply and return pipes.

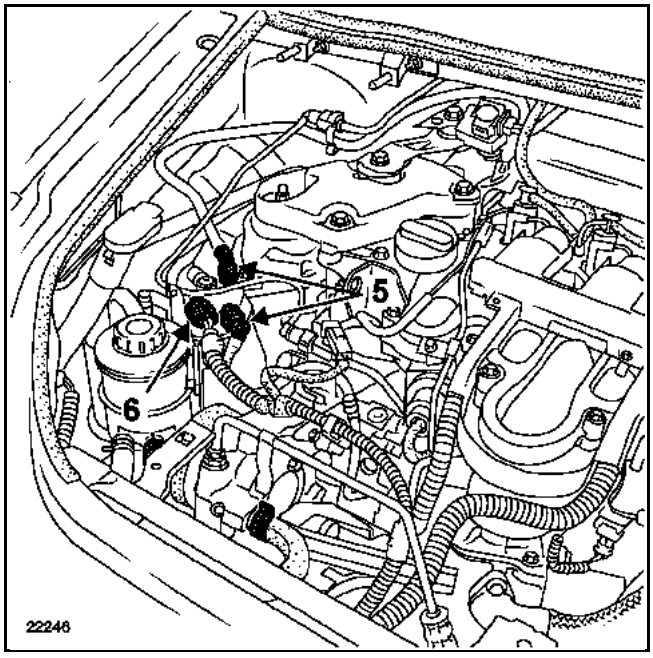

- the air hose on the manifold,
- the accessories belt,
- the fixed roller (A).

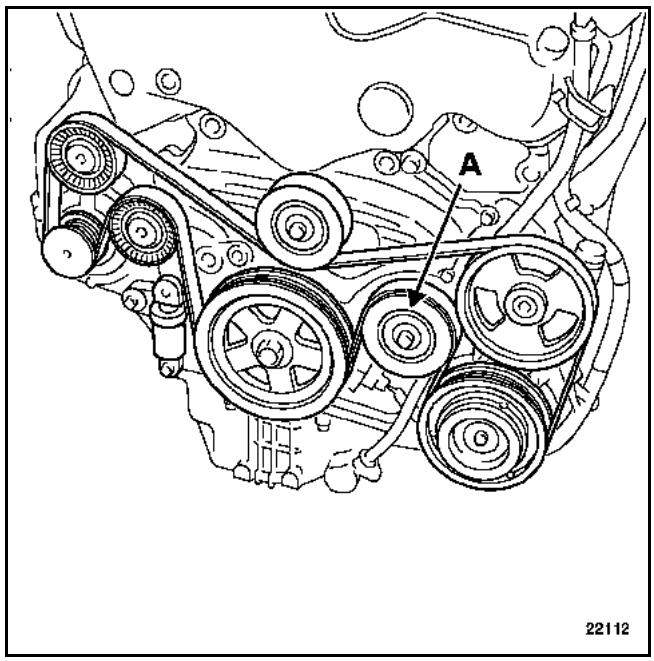

Disconnect the crankshaft sensor connector.

Remove:
- the mountings from the power assisted steering pump (see section **36B "Power assisted steering pump"**) then move the pump aside, taking care not to bend the rigid pipe,
- the gauge guide.

GETtheMANUALS.org

Remove the engine tie-bar bolt at (7).

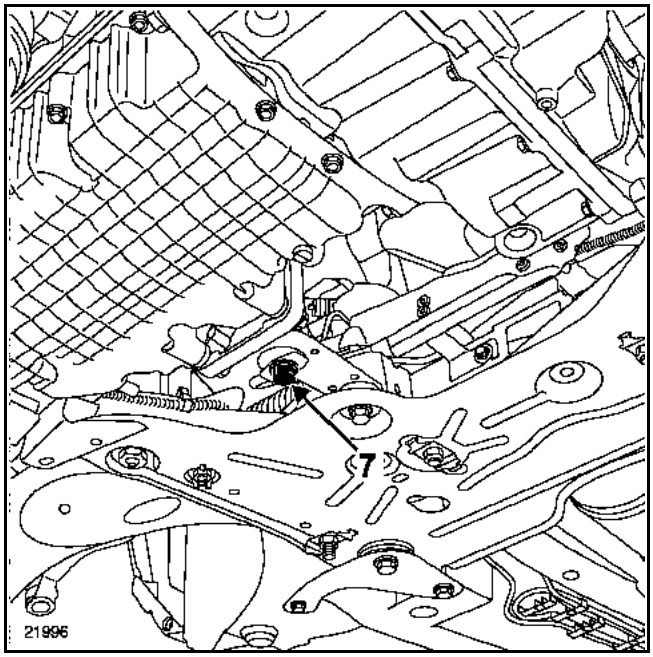

NOTE: fit the cleanliness plugs on the diesel pipes that have been removed.

WARNING: the outlet pipe could be damaged if the engine is lifted too high.

Lift the engine with **Mot. 1367-02** to enable the suspended engine mounting cover to be released.

Unclip the climate control pipe at (8).

Remove the power steering reservoir and its support (9).

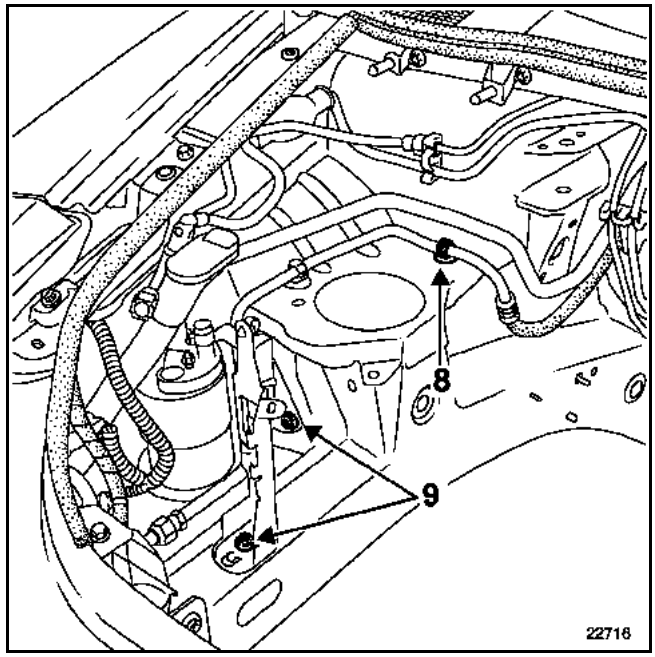

Remove:
– the suspended mounting on the cylinder head,
– the valve timing cover.

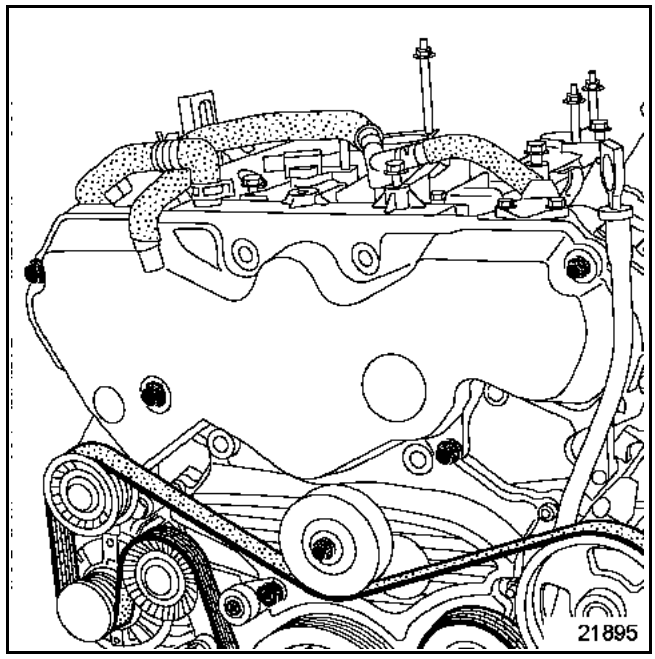

GETtheMANUALS.org

Lower the engine enough to release the access to the crankshaft accessories pulley bolt.

Align marks (A) and (B) by turning the engine clockwise with the crankshaft pulley bolt on the timing side.

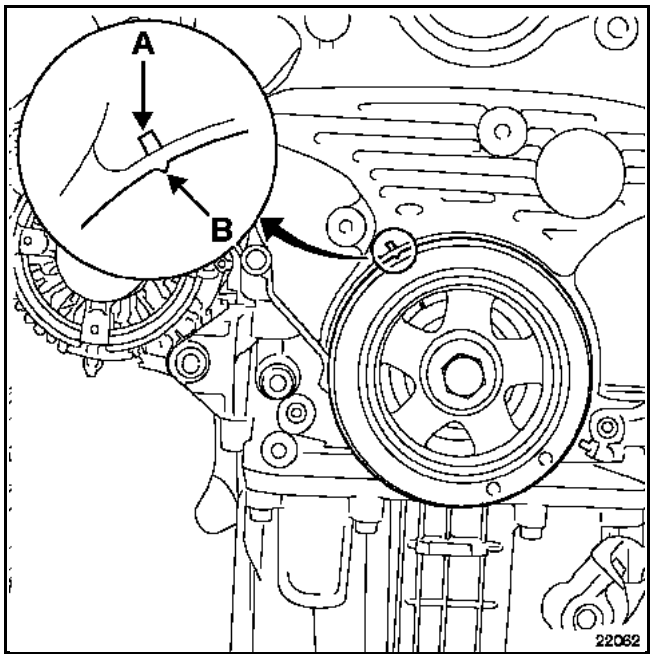

The **LH** mark on the camshaft on the front bench should be aligned with mark (C).

The **RH** mark on the camshaft on the rear bench should be aligned with mark (D).

Mark (E) on the injection pump sprocket should be aligned with the fixed mark (F) on the timing gear housing.

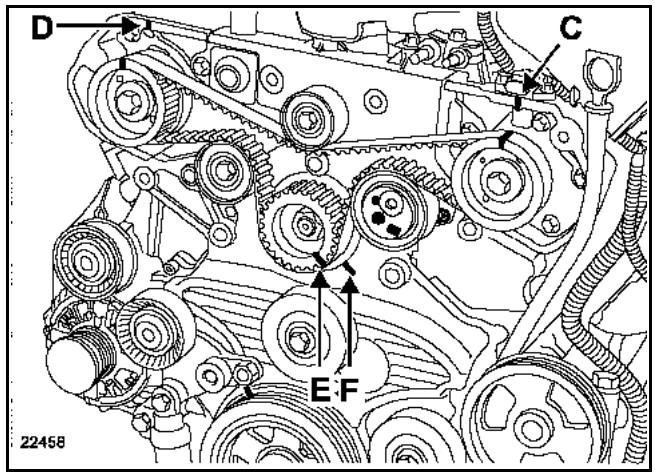

GETtheMANUALS.org

Loosen the timing belt by turning the auto tensioner anti-clockwise using a **10 mm** Allen key with a torque **no greater than 4 daNm** then by pinning the tension wheel with a **6 mm** Allen key at (G).

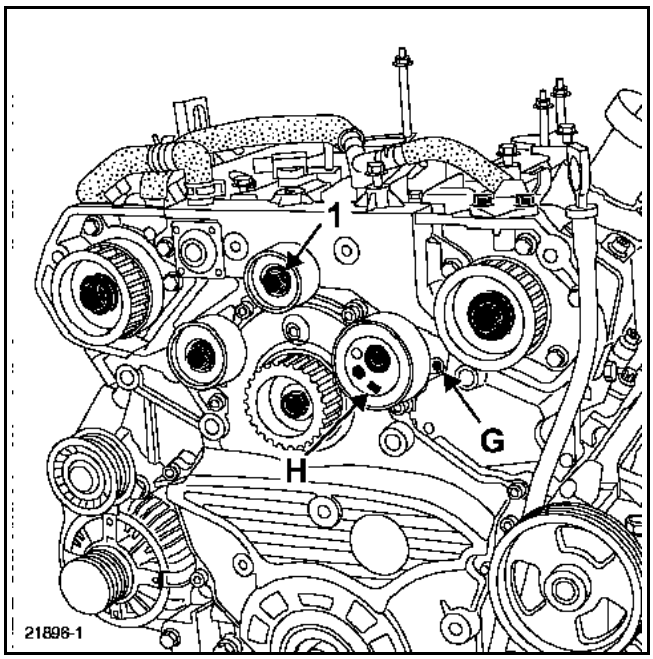

Remove the timing belt.

REFITTING

The tensioners and fixed rollers must be replaced when the timing belt is replaced.

Refit the fixed rollers and tighten them to a torque of **5 daNm**.

The smallest fixed roller is positioned at the top at (1).

Refit the tension wheel by correctly positioning the centring pin (G) in the tension hole and tightening it to a torque of **4.3 daNm**.

Compress the auto tensioner by turning it anti-clockwise using a **10 mm** Allen key with a torque **no greater than 4 daNm** then by pinning the tension wheel with a **6 mm** Allen key at (H).

GETtheMANUALS.org

Fit the new timing belt by aligning the marks on the belt with those on the camshaft sprockets and the injection pump.

For the camshaft on the front bench, the **LH** mark should be aligned with the mark on the timing belt.

For the camshaft on the rear bench, the **RH** mark should be aligned with the mark on the timing belt.

The mark on the injection pump pulley should be aligned with the third mark on the timing belt.

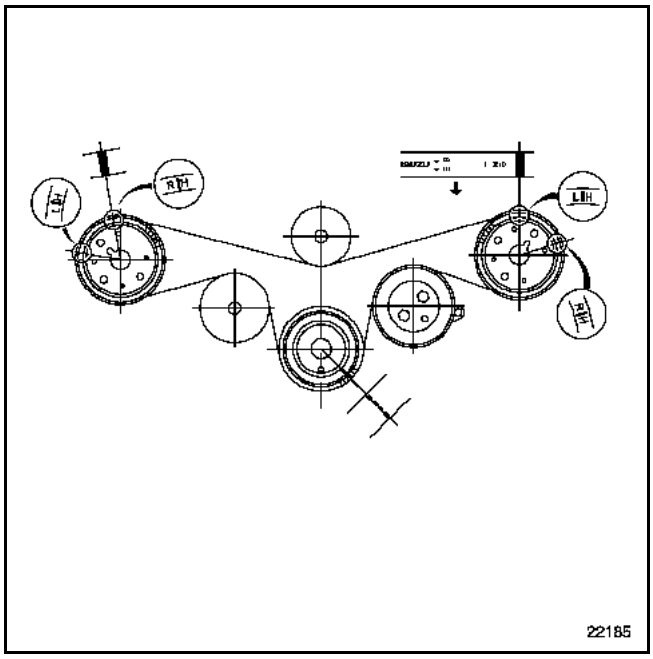

Release the tension wheel by taking out the **6 mm** Allen key that was preventing it from moving.

Rotate the engine clockwise twice and confirm that the marks are aligned. If they are not aligned, repeat the procedure from when the belt was fitted.

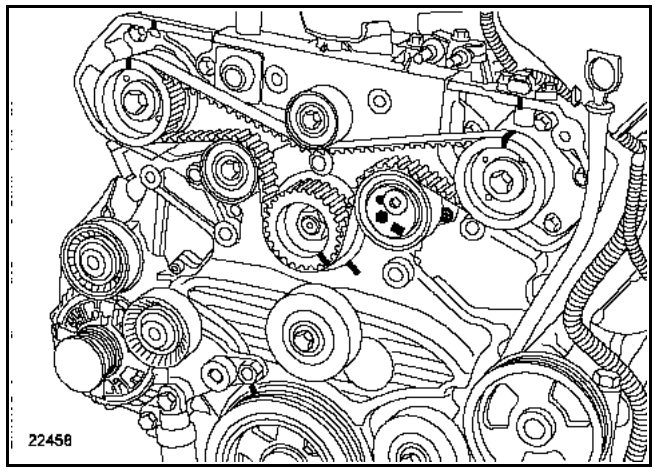

Refit the right-hand suspended engine mounting by tightening it to the correct torque (see **section 19A "Suspended engine mounting"**).

Refit the front right driveshaft (see **section 29A "Driveshaft"**).

NOTE: it is essential to replace the two O-rings on the gauge guide.

Refit the power assisted steering pump mountings (see section **36B "Power assisted steering pump"**).

Refit the accessories belt (see section **07A "Accessories belt tension"**).

Fill up the engine oil.

Continue the refitting procedure in the reverse order to removal.

GETtheMANUALS.org

The engine-gearbox assembly must be removed when the timing chain is removed or refitted, to comply with engine hygiene conditions

Refer to **manual V4Y**.

GETtheMANUALS.org

SPECIAL TOOLING REQUIRED	
Mot. 1054	TDC setting pin
Mot. 1367-02	Engine support tool
Mot. 1496	Camshaft pulley adjustment tool
Mot. 1509	Camshaft locking tool
EQUIPMENT REQUIRED	
Angular torque wrench	

TIGHTENING TORQUES (in daNm and/or °)	
Fixed roller bolt	4.5
Crankshaft pulley bolt	2 + 135° ± 15°
Tension wheel nut	2.8
Cylinder head cover bolt	1.2
Oil decanter bolt	1.2
Mounting bolt on the engine for suspended engine mounting cover	6.2
Body mounting bolt for the suspended engine mounting movement limiter	2.1
Suspended engine mounting upper linkage mounting bolt	10.5
Lower inlet manifold bolt	2.1
Coil bolt	1.2
Inlet manifold bolt	0.9
Turbocharger greasing return middle bracket mounting bolt	0.8
Turbocharger return mounting bolt	1
Catalytic converter mounting bolt	2.1
Camshaft pulley nuts	3 + 84°
Wheel bolt	11

GETtheMANUALS.org

The following components must be replaced in this operation:
– the exchanger hoses,
– the key on the crankshaft,
– the camshaft pulley nuts.

REMOVAL

Put the vehicle on a two-post lift.

Disconnect the battery.

Remove:
– the engine undertray,
– the catalytic converter (see **section 19B "Exhaust"**).

Drain the cooling circuit (through the lower radiator hose).

Remove:
– the timing belt (see method described in **section 11A "Timing belt"**).

Fit the camshaft locking tool **Mot. 1509** and tighten the nuts (1) to a torque of **8 daNm**.

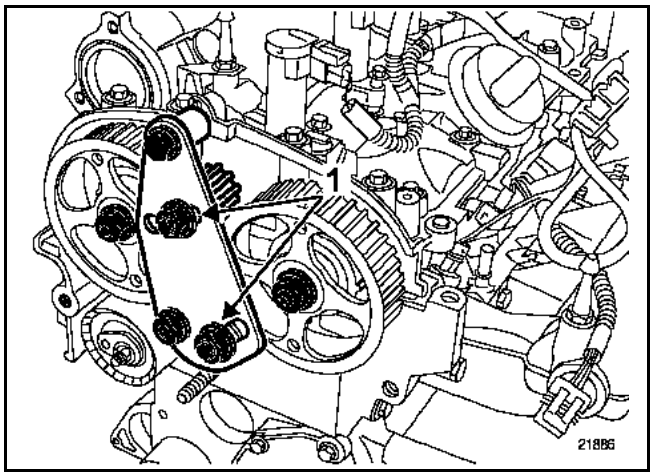

– the pulleys.

Remove:
– the turbocharger screen air duct (2),

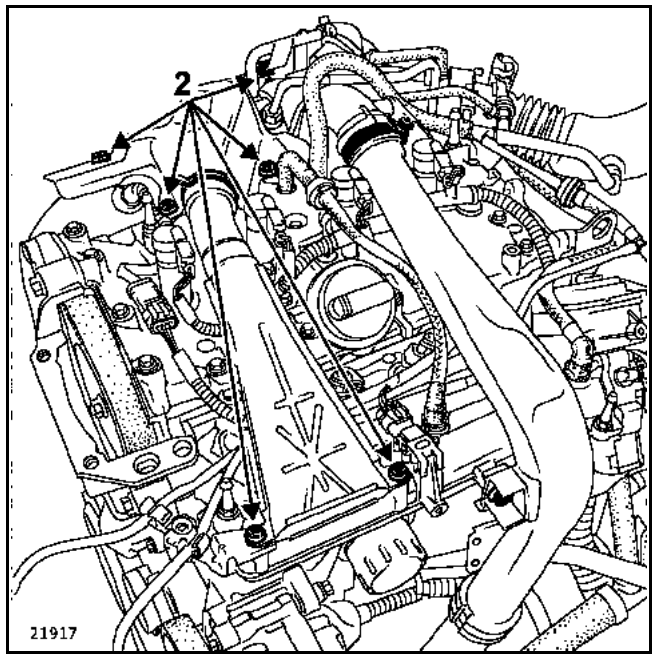

– the exchanger air intake and outlet ducts at (3).

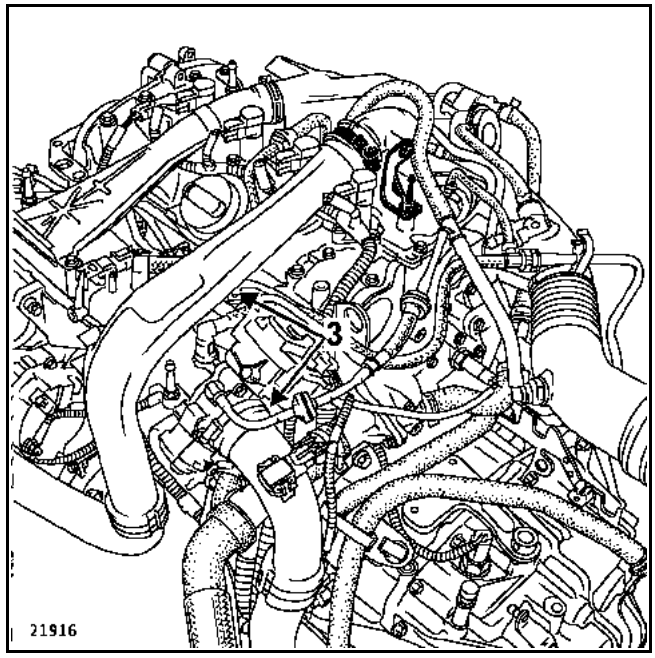

GETtheMANUALS.org

Disconnect the connectors:
– injectors (A),
– from the intake pressure sensor (B),
– from the ignition coils (C).

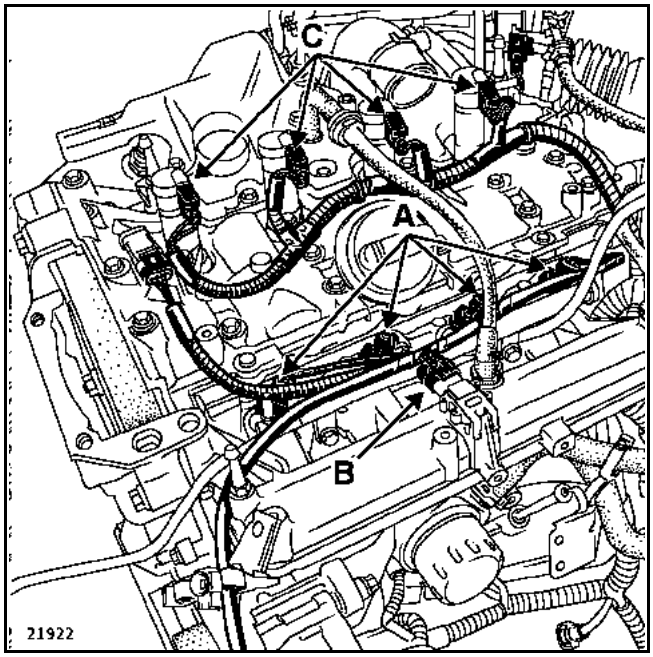

Remove:
– the petrol feed,
– the brake servo pipe
– the oil and petrol vapour rebreathing pipes (D),
– the motorised throttle body connector (E).

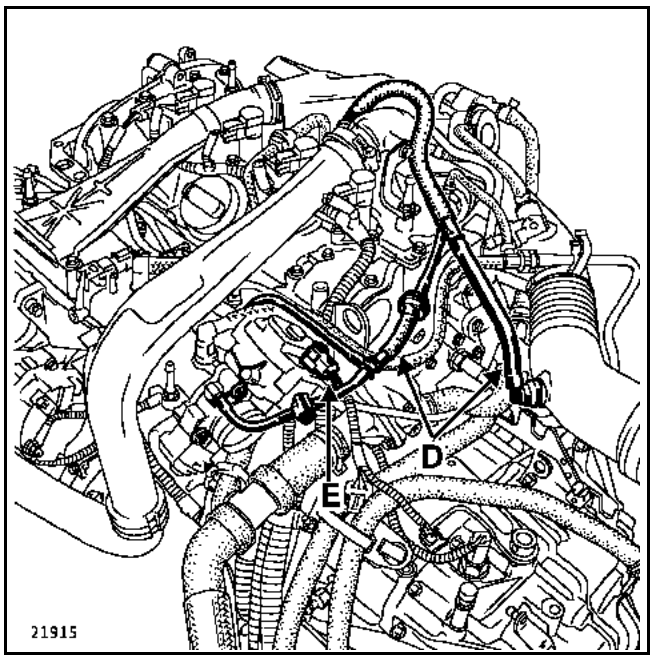

Remove:
– the turbocharger cooling hoses (F),

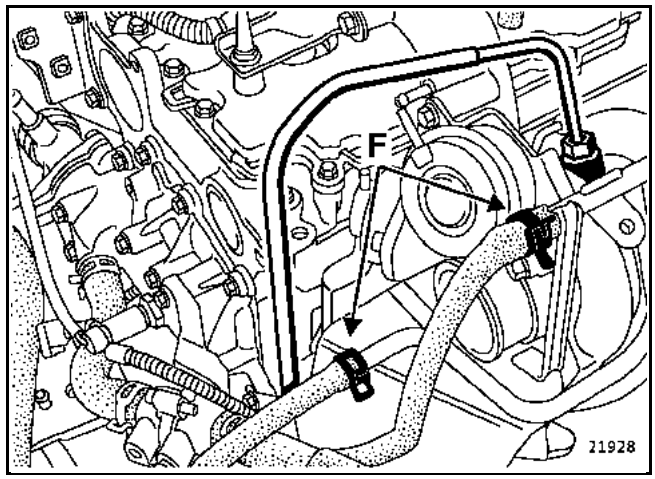

– the oil decanter,

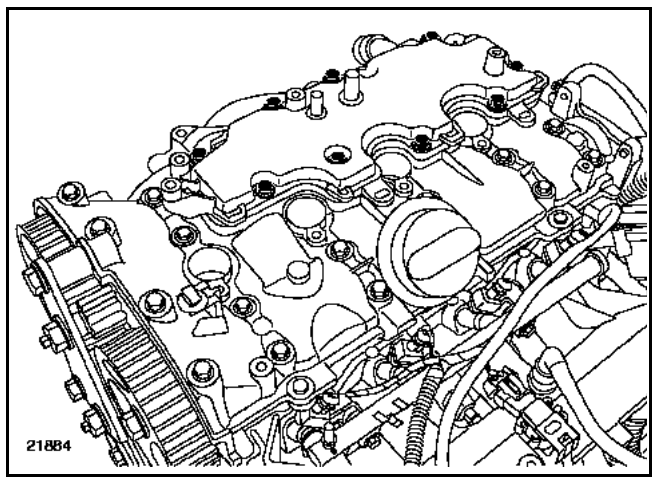

– the bolts of the cylinder head cover, then release it vertically by tapping on the **lugs** (1) using a copper hammer and lever it using a screwdriver at (2) (protect the screwdriver to avoid damaging the aluminium surfaces).

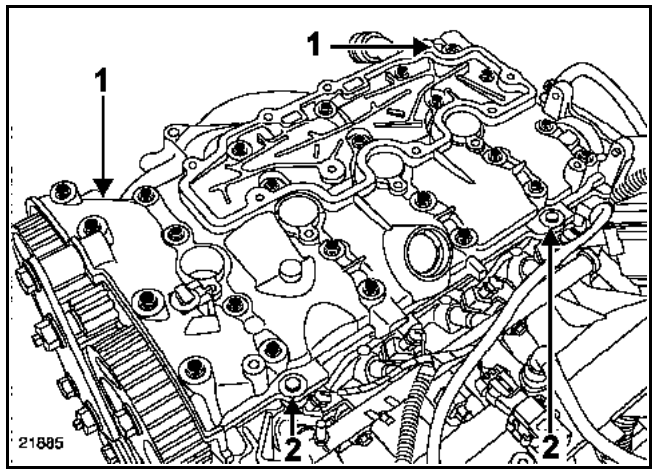

GETtheMANUALS.org

– the camshafts and the valve rockers,
– the hoses on the cylinder head water outlet housing as well as the coolant temperature sensor connector,
– the thermoplunger unit mountings.

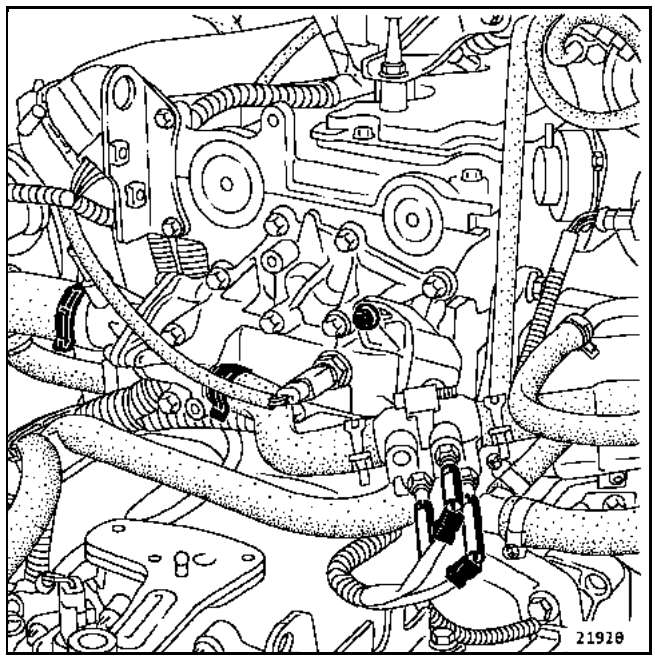

GETtheMANUALS.org

Remove the cylinder head.

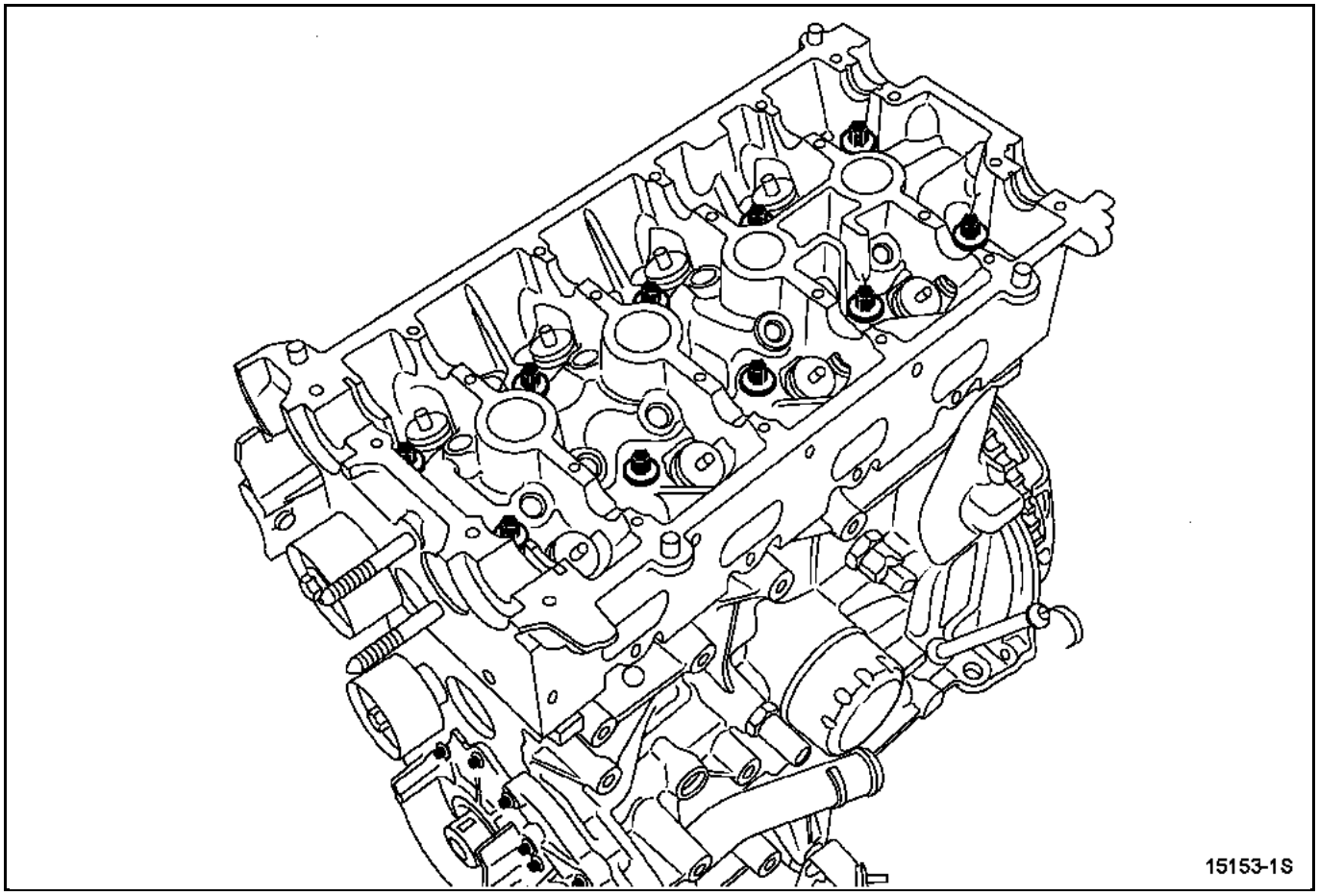

CLEANING

It is very important not to scratch the gasket faces of any aluminium component.

Use the **Décapjoint** product to dissolve any remains of the gasket still adhering.

Wear gloves whilst carrying out the following operation.

Apply the product to the parts to be cleaned; wait about ten minutes, then remove it using a wooden spatula.

Please take the greatest care during this operation to prevent the entry of foreign bodies into the oil galleries (channels located in the cylinder block and in the cylinder head).

CHECKING THE GASKET FACE

Check that there is no gasket face bow.

Maximum deformation: **0.05 mm**.

No regrinding of the cylinder head is permitted.

Check the cylinder head for cracks.

GETtheMANUALS.org

Position the pistons at mid-stroke to prevent any contact with the valves when the camshafts are being refitted.

Position the cylinder head gasket then the cylinder head.

Check the bolts then tighten the cylinder head (see Section 07A "Tightening the cylinder head").

Refit:
– the valve rockers,
– the camshafts, oiling the bearings.

IMPORTANT: do not put oil on the gasket face of the cylinder head cover.

The camshafts are identified by a marking (A).

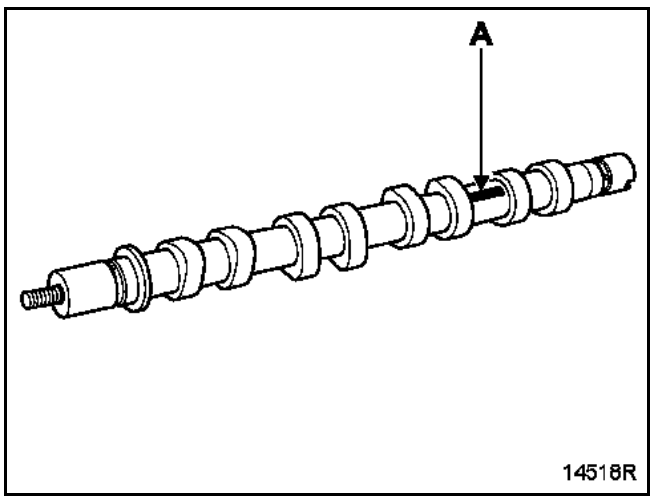

Detail of the marking:
– marks (B) and (C) are intended for the supplier only,
– mark (D) is used for identifying the camshafts:
AM = Inlet
EM = Outlet

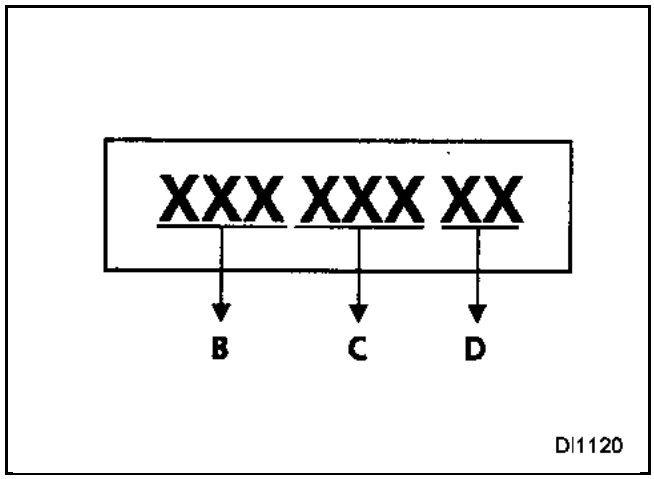

GETtheMANUALS.org

REFITTING

Observe the following points when dismantling and refitting the cylinder head:
- **it is essential to replace the camshaft nuts,**
- **it is essential to replace the exchanger hoses,**
- **It is essential to re-prime the hydraulic tappets as these may become drained if left for too long.**

To check whether a tappet needs repriming, press the top of the tappet at (A) with your thumb and if the tappet piston can be pressed down, immerse the tappet in a container filled with diesel then refit it.

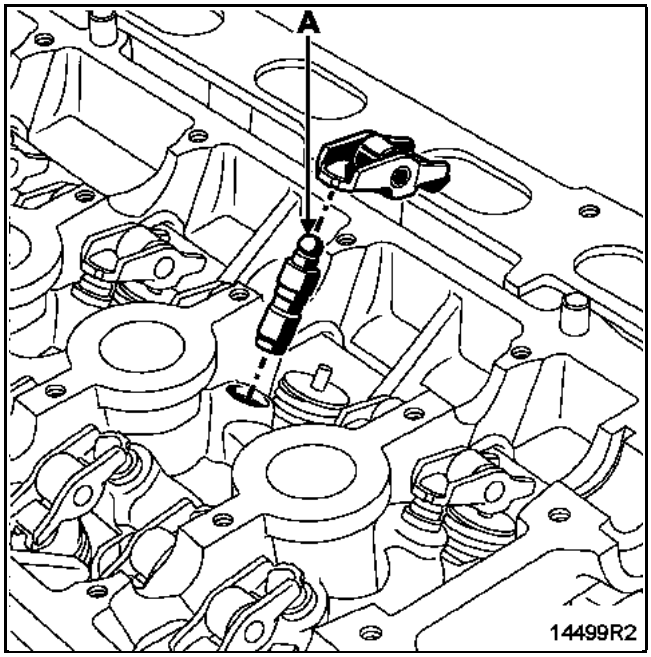

GETtheMANUALS.org

METHOD FOR TIGHTENING THE CYLINDER HEAD

The bolts can be reused if the length under the head does not exceed 118.5 mm (otherwise replace all the bolts).

REMINDER: Use a syringe to remove any oil which may have entered the cylinder head mounting bolt holes to achieve correct tightening of the bolts.

Do not oil the new bolts. However, the bolts must be oiled if they are being reused.

Tighten all the bolts to **2 daNm** in the order recommended below.

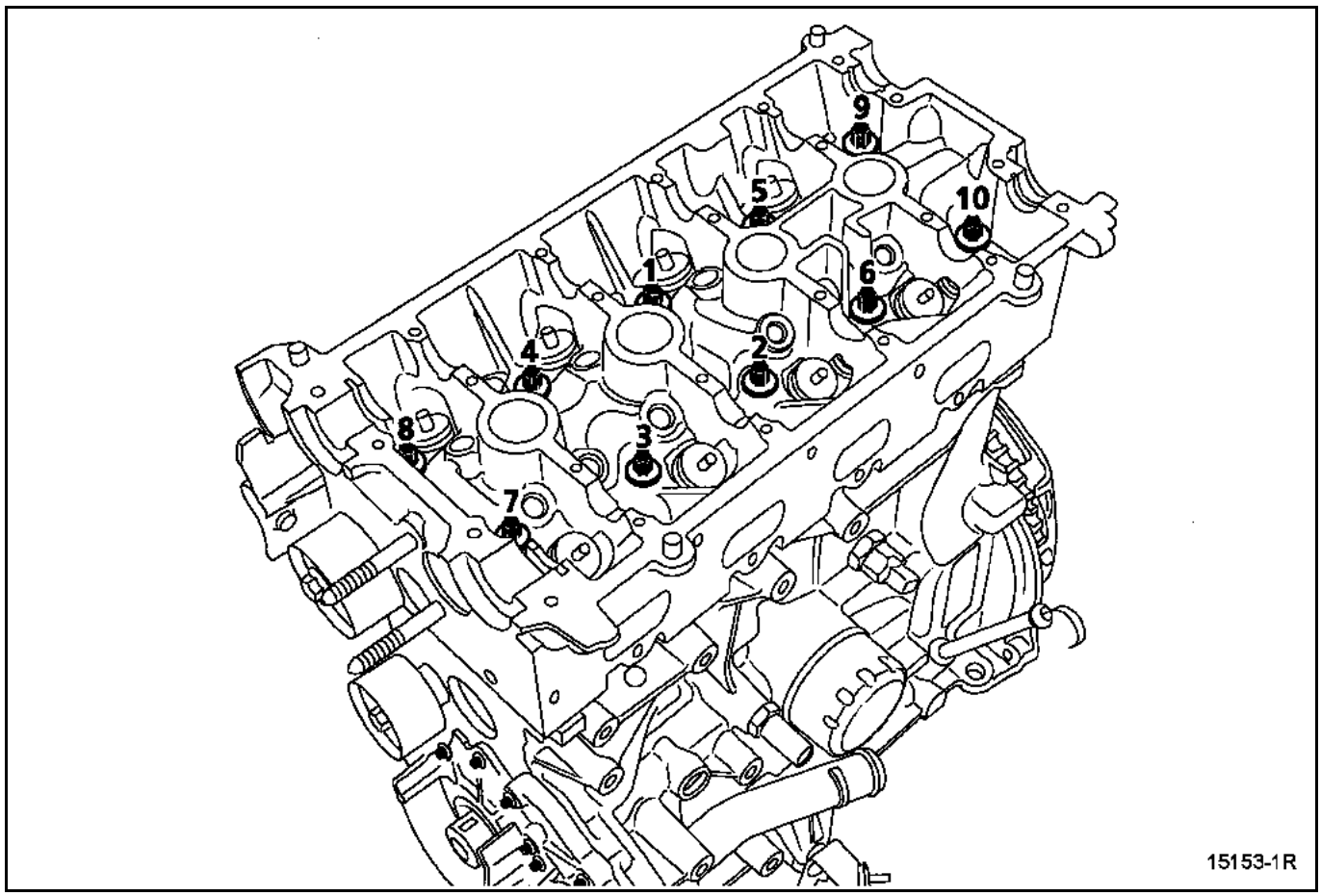

Check that all the bolts are correctly tightened to **2 daNm** then, bolt by bolt, tighten to an angle of **165° ± 6°**.

Do not tighten the cylinder head bolts after applying this procedure.

GETtheMANUALS.org

Position the grooves of the camshafts as shown in the diagram below.

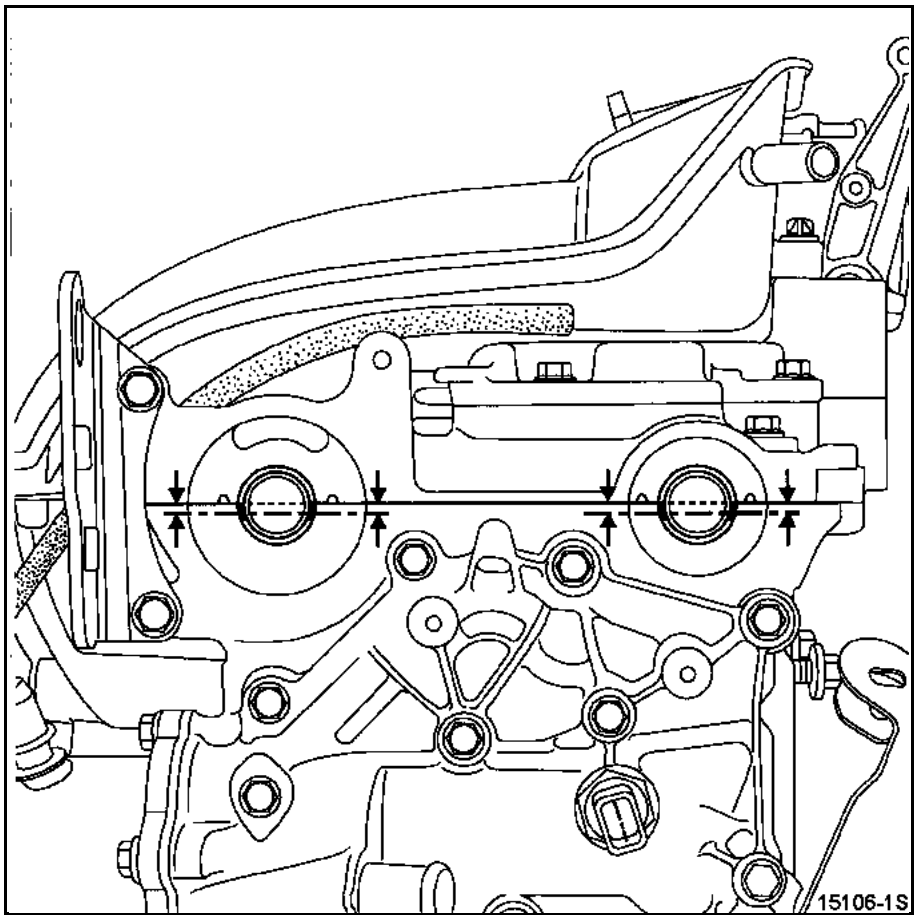

NOTE: the gasket faces must be clean, dry and free from grease (avoid finger marks).

Apply **Loctite 518** using a stipple roller to the gasket face of the cylinder head cover until it turns **reddish in colour**.

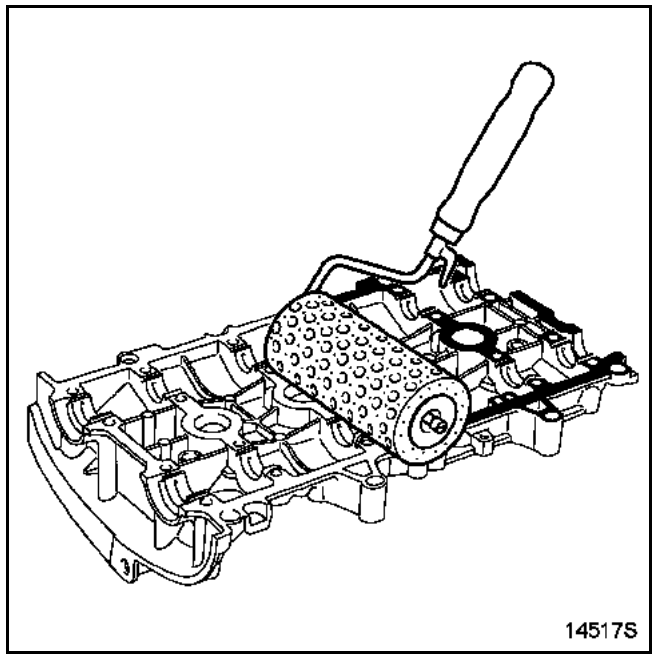

GETtheMANUALS.org

Fit the cylinder head cover tightening it to the correct torque.

Tightening procedure

Assembly	Bolt tightening order	Bolt slackening order	Tightening torque (in daNm)
Operation no. 1	22 - 23 - 20 - 13	-	0.8
Operation no. 2	1 to 12 14 to 19 21 and 24	-	1.2
Operation no. 3	-	22 - 23 - 20 - 13	-
Operation no. 4	22 - 23 - 20 - 13	-	1.2

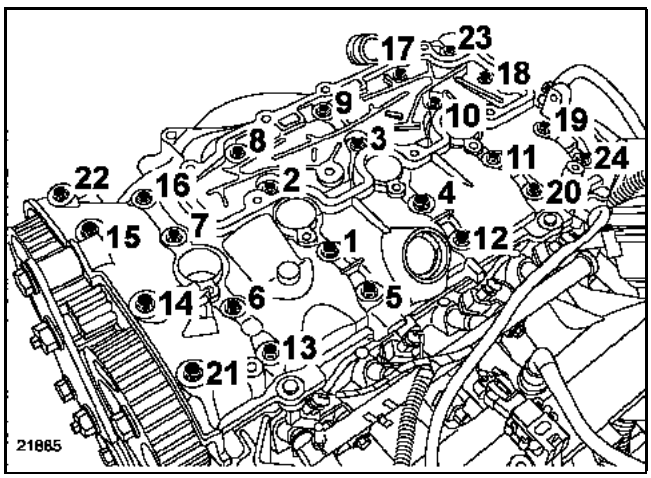

GETtheMANUALS.org

NOTE: the gasket faces must be clean, dry and free from grease (avoid finger marks).

Apply **Loctite 518** using a stipple roller to the gasket face of the cylinder head cover until it turns **reddish in colour**.

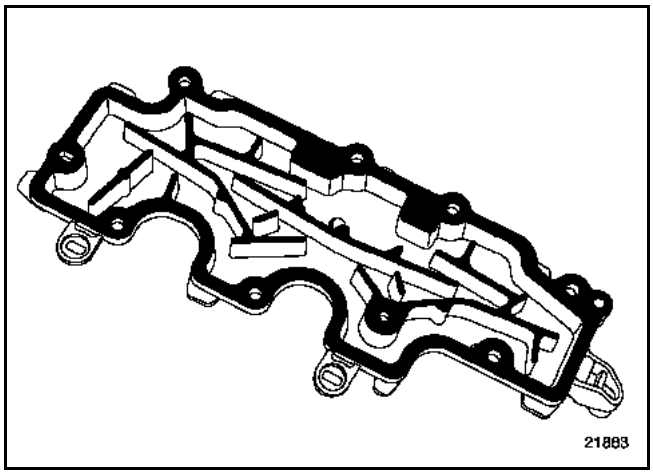

Fit the oil decanter and tighten it to a torque of **1.3 daNm** in the recommended order.

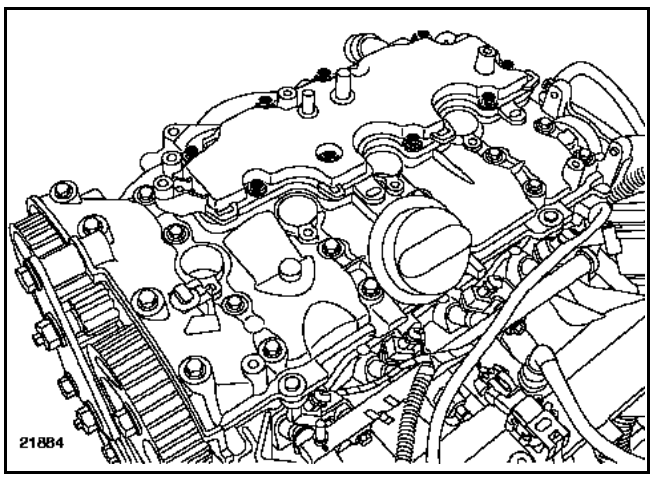

Replacing the camshaft seals

Fit the seal of the **outlet camshaft dephaser** using tool **Mot. 1512**, using the old nut (1).

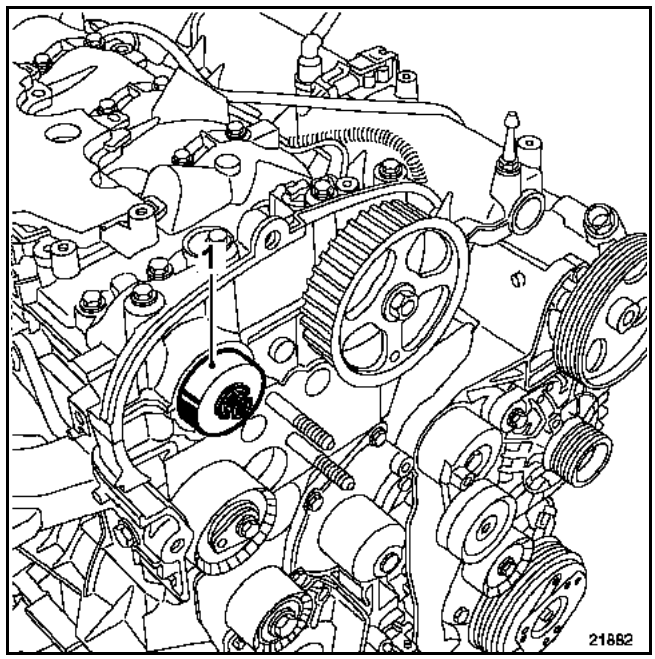

Fitting the seal of the **inlet camshaft** using tool **Mot. 1517** and the old bolt (2).

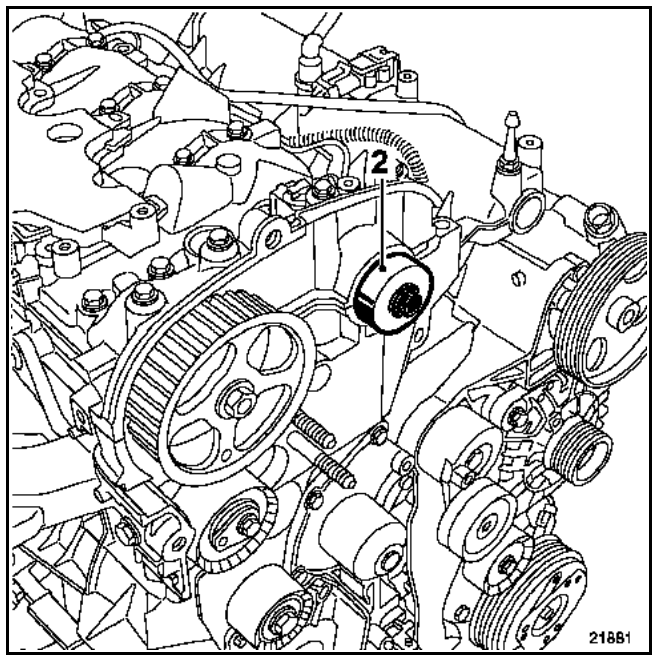

GETtheMANUALS.org

Adjusting the timing

IMPORTANT: it is essential to degrease the tip of the crankshaft, the bore of the timing pinion, the bearing faces of the pulley, the ends of the camshafts (timing side) and the bores of the camshaft pinions to prevent the timing from slipping, which could damage the engine.

Refit:
– the timing belt (following exactly the method described in section **07A "Timing belt tensioning procedure"**),
– the accessories belt (see **section 07A "Accessories belt tension"**),
– the new sealing plugs:
  ● of the inlet camshaft **(Mot. 1487)**,
  ● of the outlet camshaft **(Mot. 1488)**.

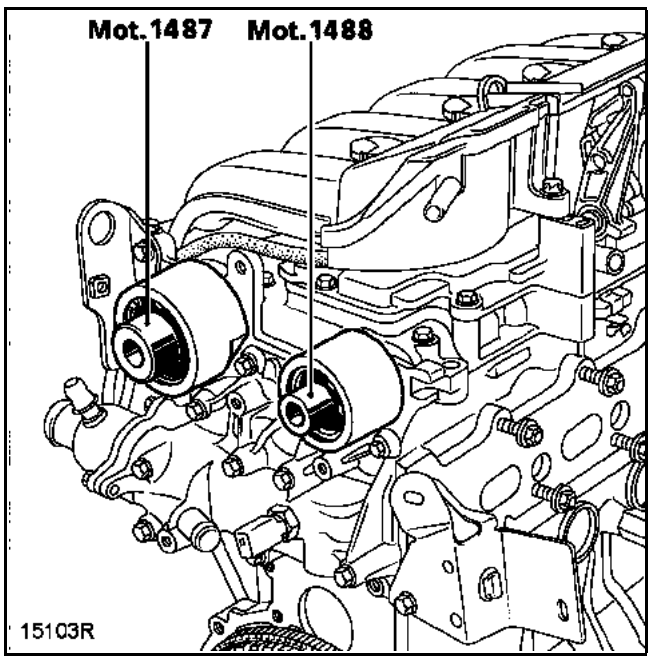

– the right-hand suspended engine mounting by tightening it to the correct torque (see **section 19D "Suspended engine mounting"**).

Refitting is the reverse of removal.

Fill and bleed the cooling system, (see **section 19A "Filling and Bleeding"**).

GETtheMANUALS.org

SPECIAL TOOLING REQUIRED	
Mot. 1202-01 Mot. 1202-02	Hose clip pliers
Mot. 1534	Inlet camshaft timing tool
Mot. 1536	TDC setting pin
Mot. 1537	Outlet camshaft timing tool
Mot. 1448	Remote operation clip pliers for cooling system hose clips
Mot. 1505	Belt tension setting tool Hz measurement
Mot. 1549	Injector extractor
Mot. 1566	Tool for removing and refitting high pressure pipes

EQUIPMENT REQUIRED

18 Torx socket
Facom wrench for DM19 high pressure pipes
Angular torque wrench
Cylinder head testing tool

TIGHTENING TORQUES (in daNm and/or °)	
Tension wheel nut	2.5
Front right-hand support mounting bolt	4.4
Front right support mounting bolt on the side member	8.5
High pressure pipes	2.5
Injector bracket nut on the flywheel side	2.3
High pressure pipe mounting nut	2.5
Injection rail mounting bolt	2.3
Pump/rail pipe bracket bolt	2.5
Camshaft mounting bolt	1.3
Cylinder head cover mounting bolt	1.2
Turbocharger mounting nut	2.6
EGR pipe mounting bolt	2.5
TDC pin hole bolt	2.2
Wheel bolt	11

IMPORTANT: before carrying out any work, connect the After-Sales diagnostic tool, set up communication with the injection computer and check that the injection rail is not under pressure.

Take note of the fuel temperature.

Order the special high pressure injection circuit plug kit.

REMOVAL

FOLLOW THE CLEANLINESS INSTRUCTIONS CLOSELY AS GIVEN IN SECTION 13B SPECIAL FEATURES AND CLEANLINESS

Put the vehicle on a two-post lift.

Disconnect the battery.

GETtheMANUALS.org

Remove:
– the front right wheel,
– the right-hand front wheel arch liner and side protector,
– the engine undertray,
– the engine cover;
– the timing belt (see **section 11A "Timing belt"**),
– the tension wheel,
– the air filter unit and the air intake tube,
– the turbocharging air ducts on the turbocharger and the exchanger inlet,

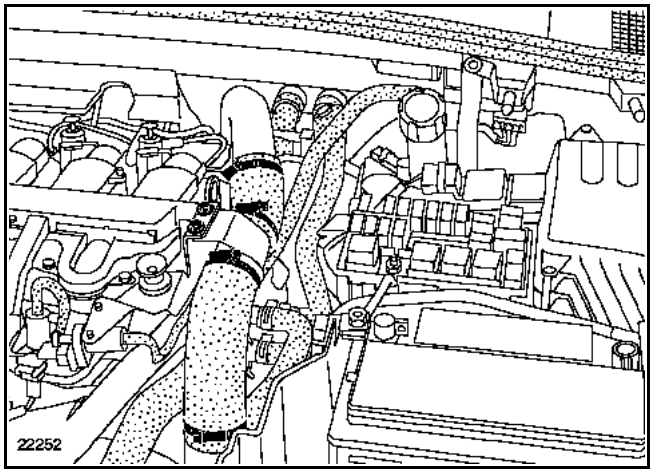

Unclip the rubber protector and push it back as far as possible.

Loosen the clamps (1).

Remove:
– the exhaust gas recirculation pipe (2),

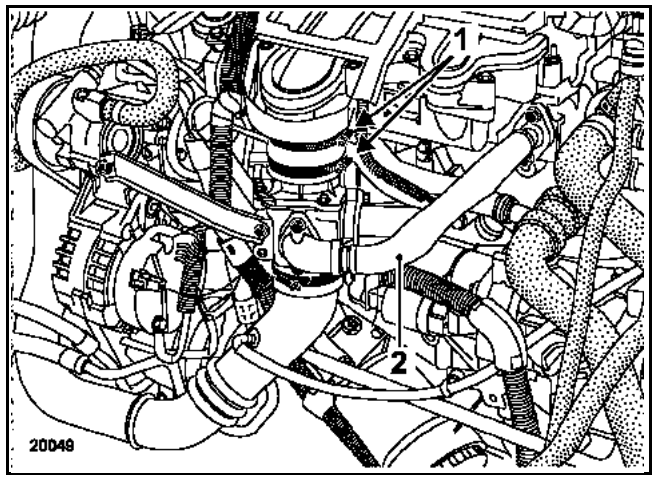

– the protector from the electrical harness at (3),

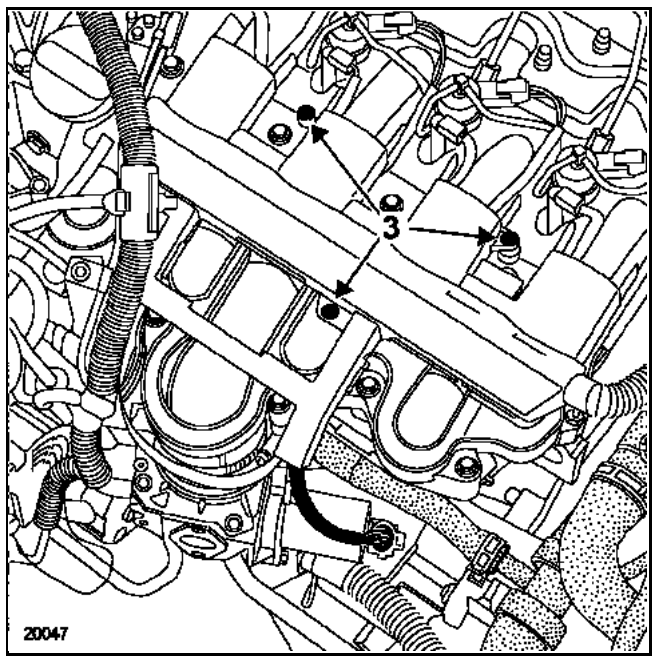

GETtheMANUALS.org

– the air solenoid valve connectors (4),
– the air pressure pipes (5),

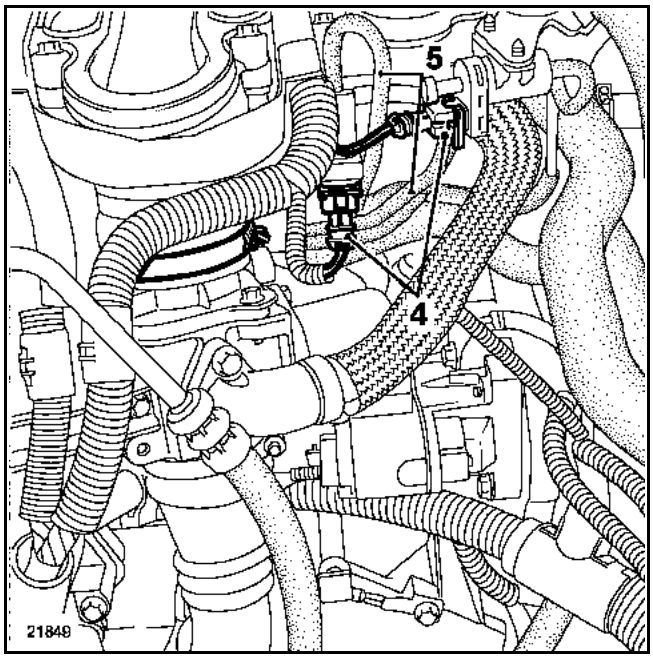

– the absorbent soundproofing.

Disconnect:
– the vacuum pipe on the vacuum pump,
– the fuel return pipe (6).

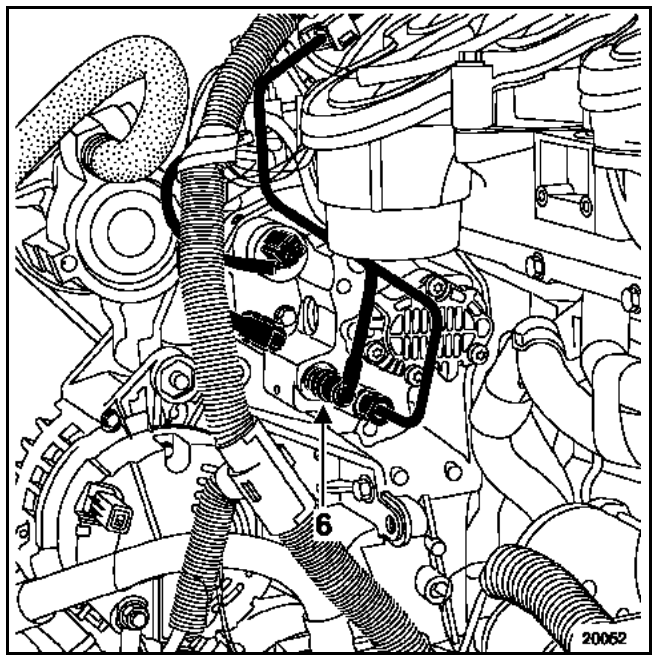

Remove the heater radiator pipes (7).

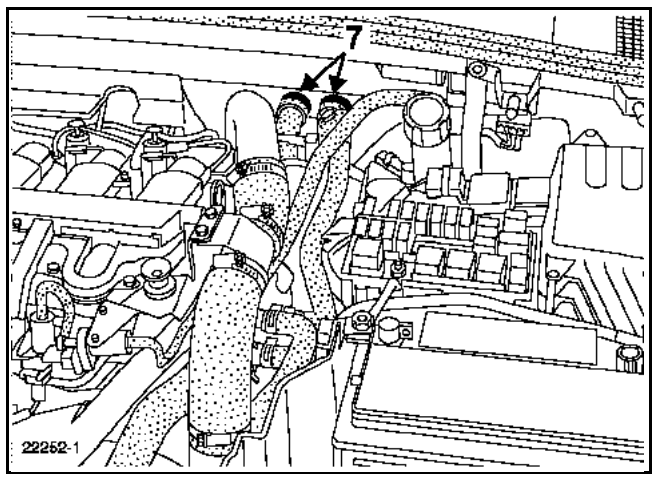

GETtheMANUALS.org

Remove:
– the thermoplunger connectors (8),

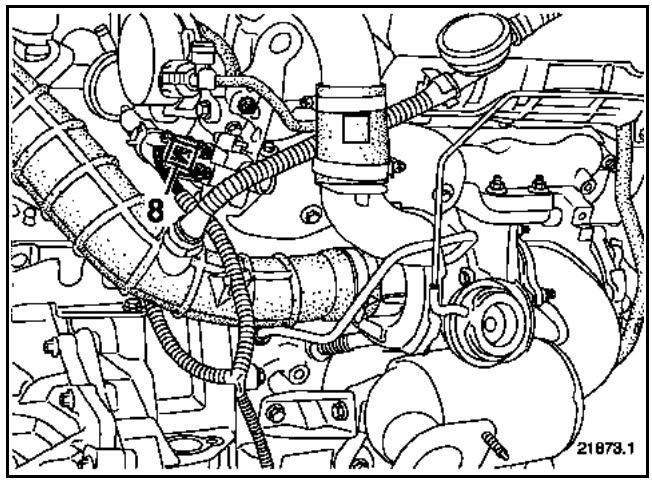

– the exhaust downpipe mountings,
– the mountings from the turbocharger on the exhaust manifold (9).

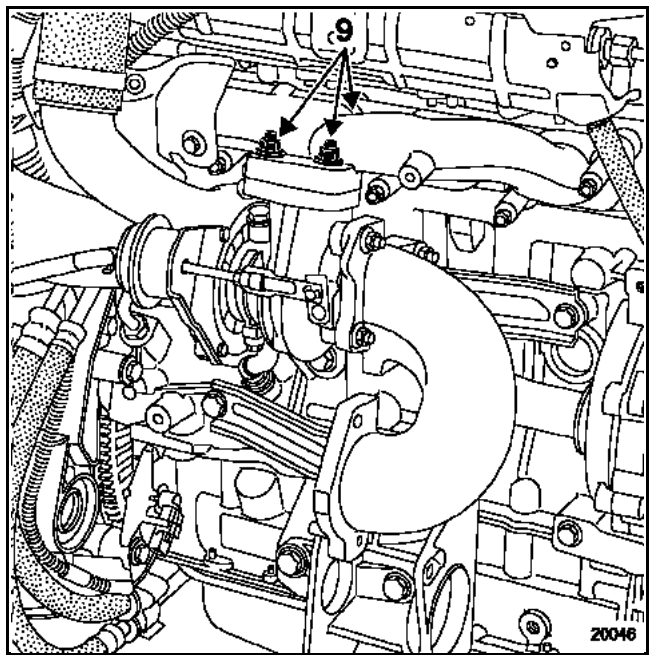

GETtheMANUALS.org

Remove:
– the oil vapour rebreathing pipe (10),
– the injector connectors, the heater plugs and the pressure sensor (11),
– the diesel fuel return pipe (12) on the injectors and the injector rail then remove it (allow for its replacement when removing it),
– the injection pipe (13) between the high pressure pump and the rail, taking care not to damage the bracket (14),
– the injector pipes (15).

Fit plugs to maintain cleanness.

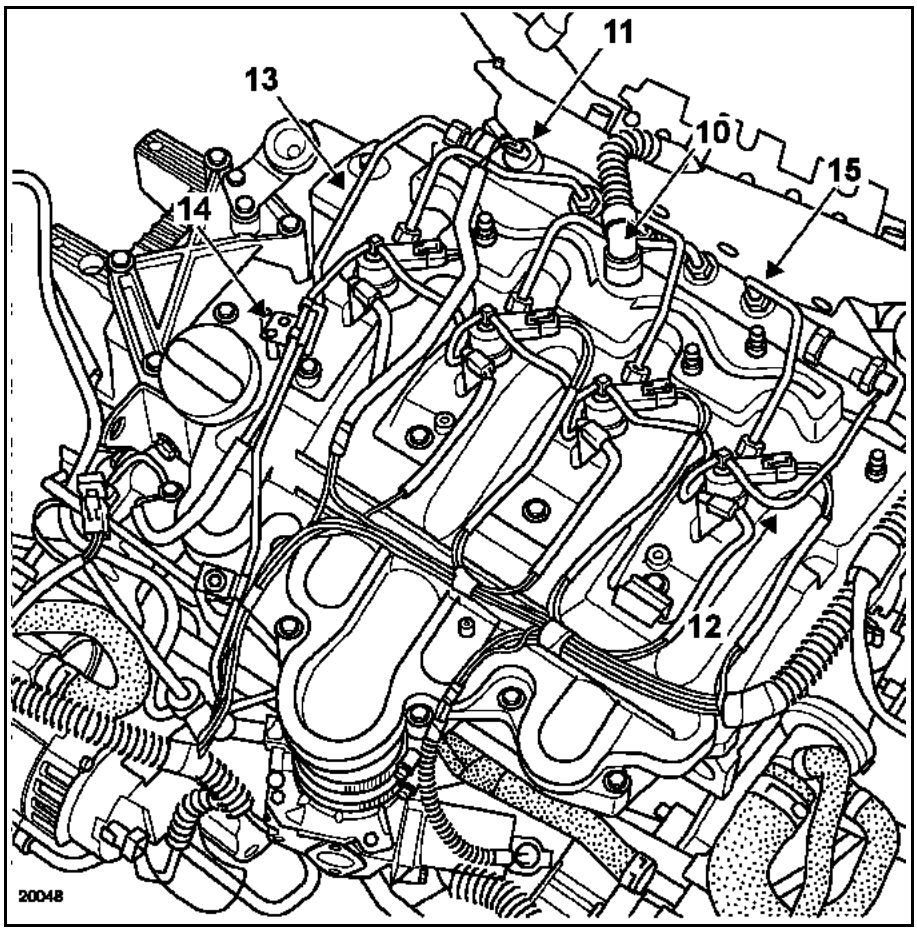

Remove:
– the injection rail,
– the rubber protector and its metal bracket.

GETtheMANUALS.org

WARNING: when loosening the injection pipe unions (1) on the injector holders, you must hold the filter-rod supporting nuts (2) with a wrench.

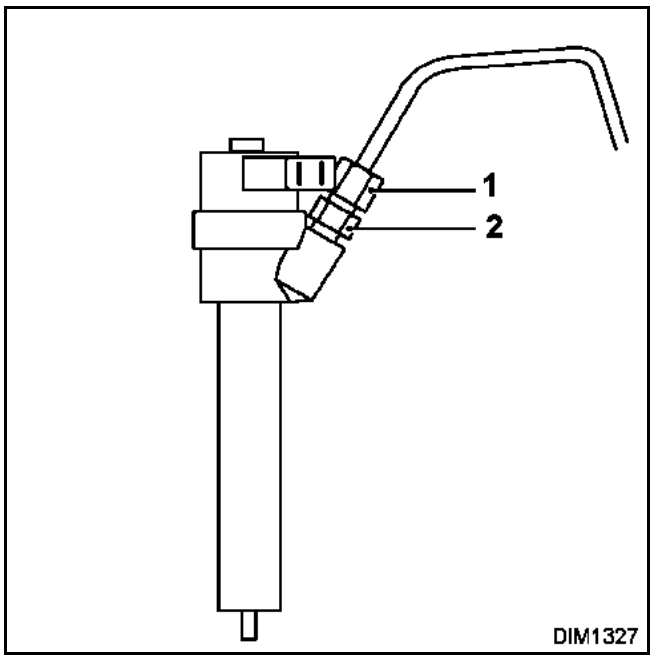

Loosen the injection rail bolts.

The injectors are removed using tool **Mot. 1549**.

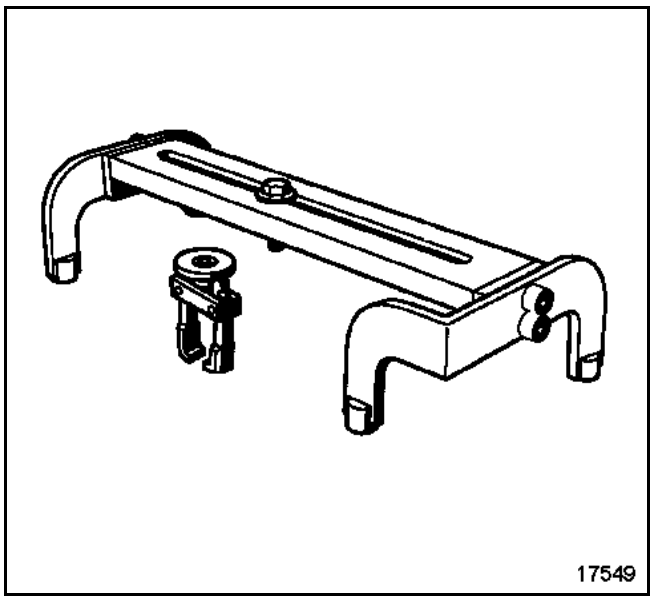

Apply releasing agent around the injector.

Loosen the injector bracket bolts completely, then place the **Mot. 1549** clamp as shown in the following diagram.

Tighten the knurled ring to bring the two jaws together on the flat surfaces without over-tightening.

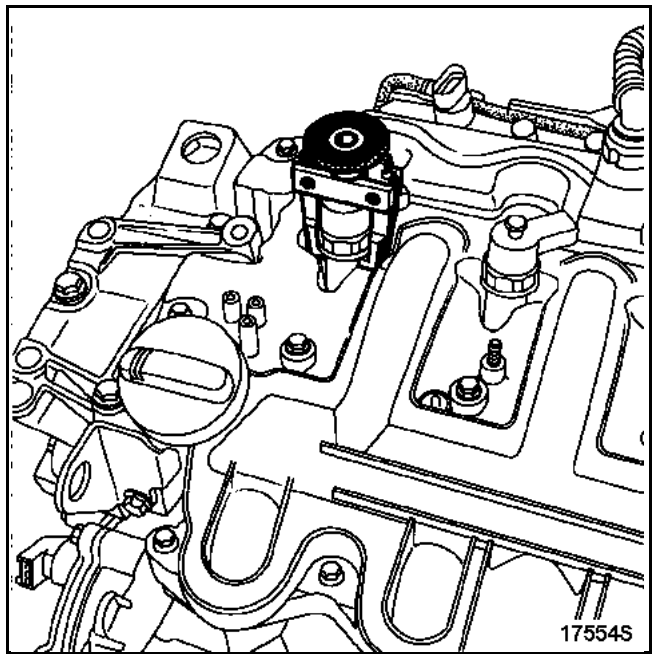

Put the **Mot. 1549** member on the cylinder head cover bolts (as shown in the following diagram).

Tighten the bolt in the clamp (3) until the injector is detached. Perform the same operation on the other injectors.

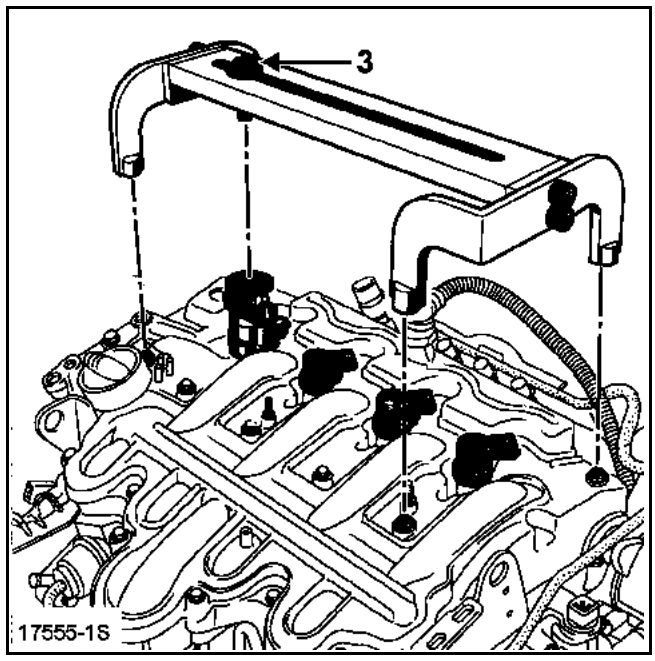

GETtheMANUALS.org

Remove:
– the cylinder head cover,

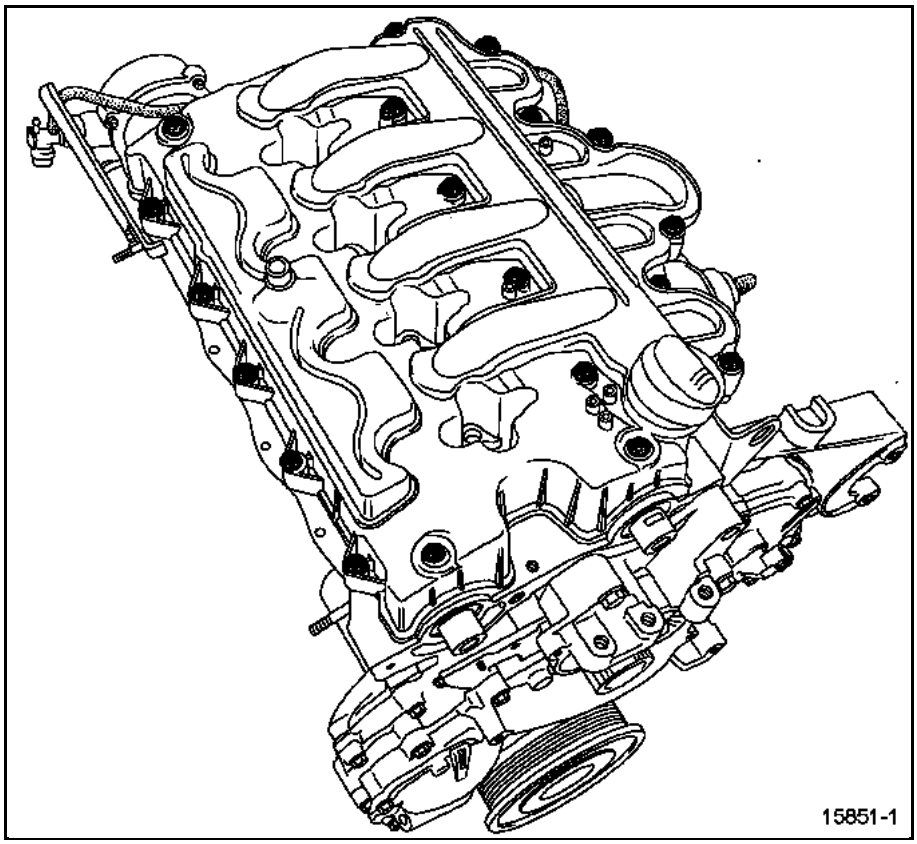

– the rocker shafts.

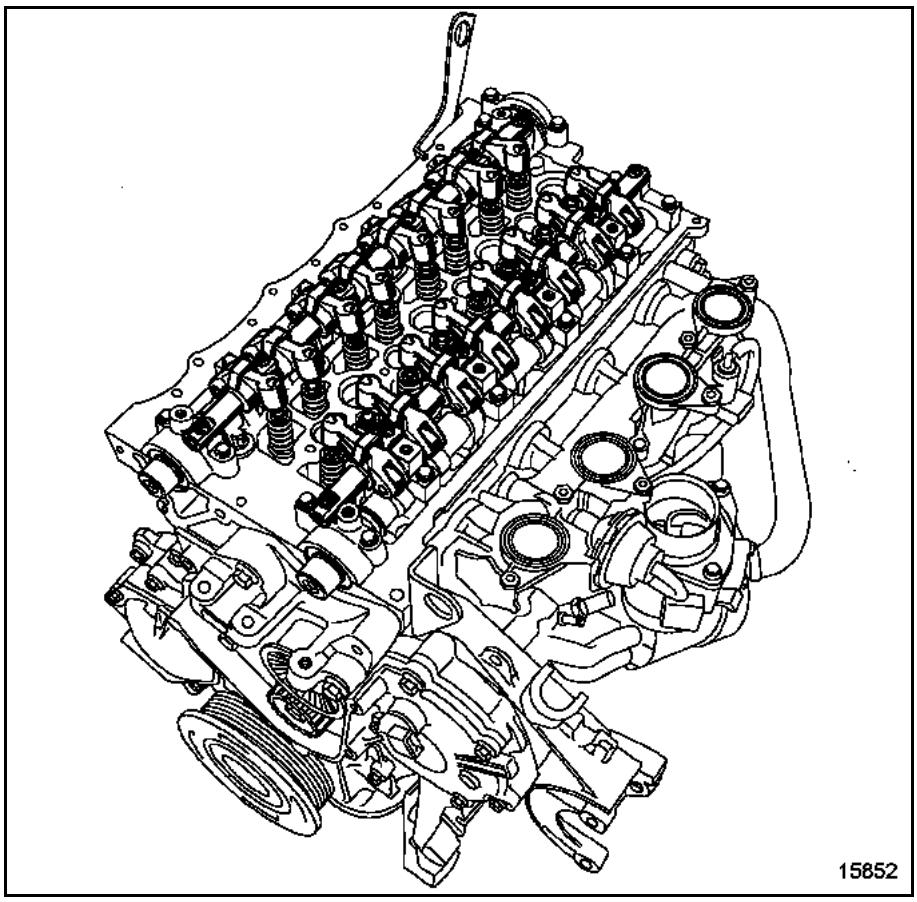

GETtheMANUALS.org

Remove:
– the mounting bolts from the cylinder head coolant unit,
– the cylinder head.

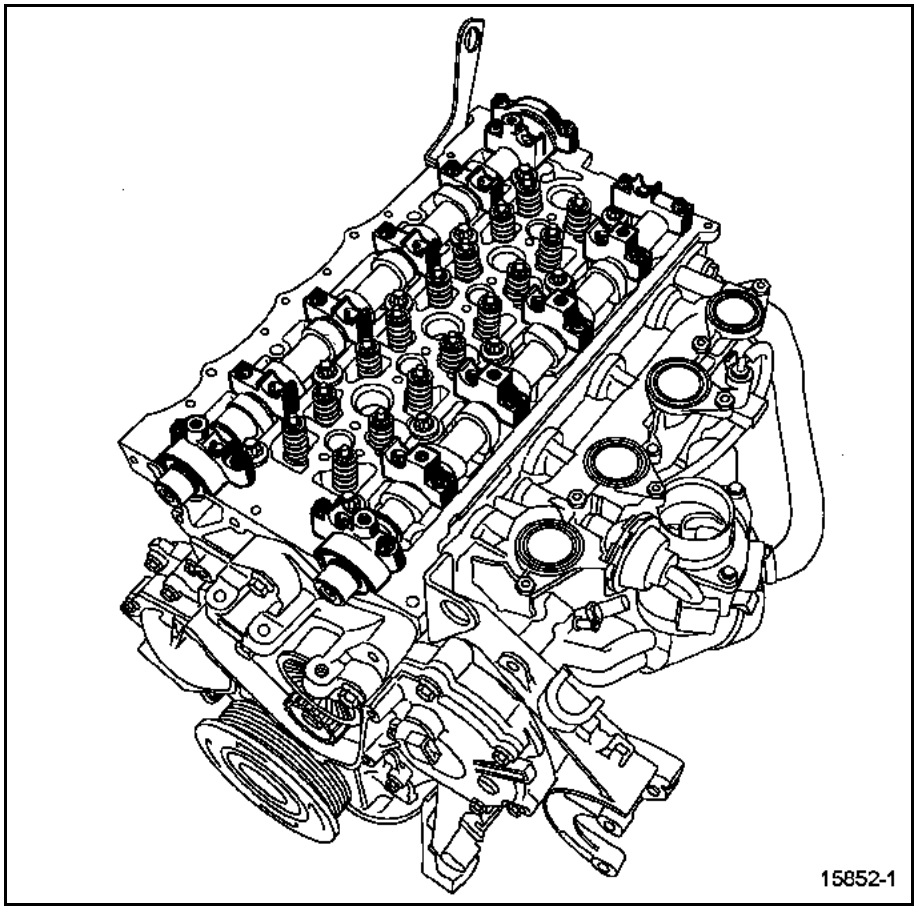

CLEANING

It is very important not to scratch the gasket faces of any aluminium component.

Use the **Décapjoint** product to dissolve any remains of the gasket still adhering.

Wear gloves whilst carrying out the following operation.

Apply the product to the parts to be cleaned; wait about ten minutes, then remove it using a wooden spatula.

Please take the greatest care during this operation to prevent the entry of foreign bodies into the oil galleries (channels located in the cylinder block and in the cylinder head).

CHECKING THE GASKET FACE

Check that there is no gasket face bow.

Maximum deformation: **0.05 mm**.

No regrinding of the cylinder head is permitted.

Test the cylinder head to detect possible cracks using the cylinder head test tools (a container and a kit for the particular cylinder head, plug, sealing plate, blanking plate). The approval number of the cylinder head test container is **664000**.

GETtheMANUALS.org

REFITTING

Fit the cylinder head gasket (with the markings on the seal facing upwards), then the cylinder head.

Bring the pistons to mid-stroke position to prevent them from coming into contact with the valves as the cylinder head is tightened.

Tighten the cylinder head using an angular torque wrench (see section 07A "Tightening the cylinder head").

Refit the camshafts and position them as follows:
– for the outlet camshaft, put the end of the camshaft with the flat surface (1) on the timing side,
– for the inlet camshaft, put the end of the camshaft without the flat surface (2) on the timing side,

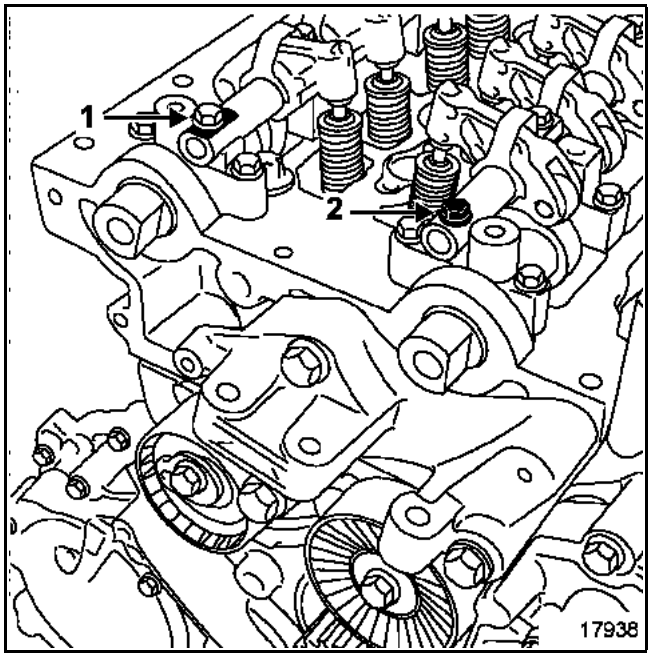

GETtheMANUALS.org

Tighten the camshaft bolts to a torque of **1.3 daNm** in the recommended order.

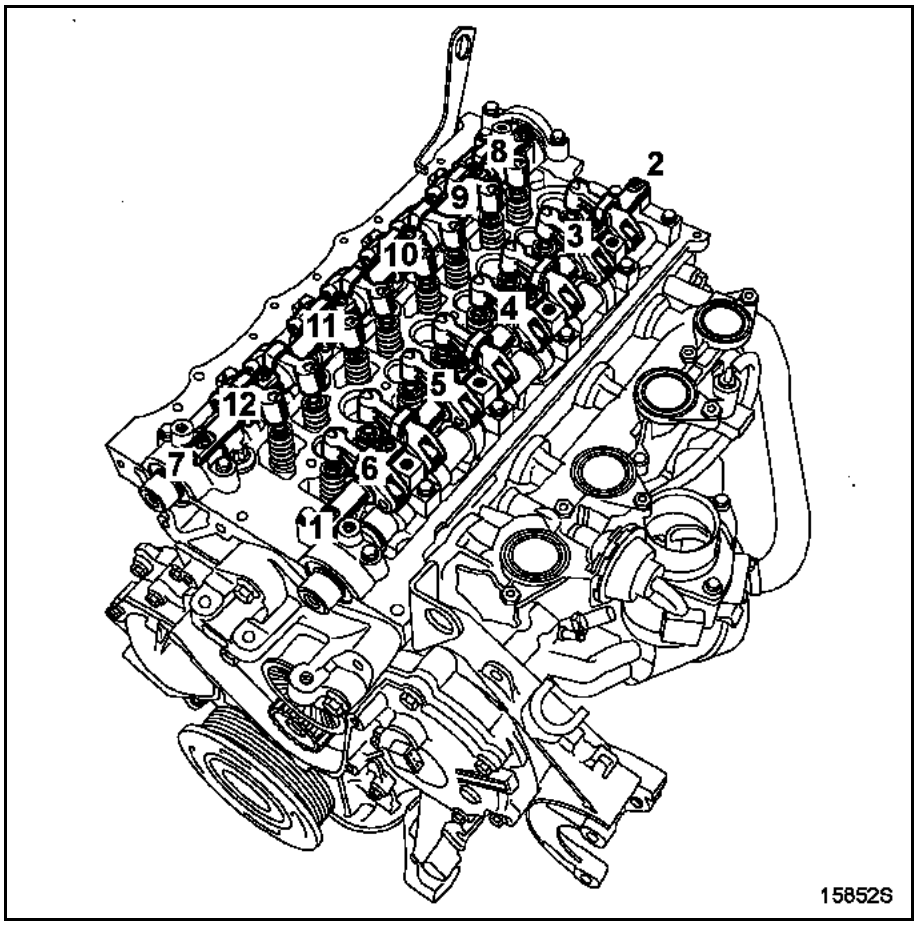

GETtheMANUALS.org

Put **Rhodorseal 5661** in the corners of the camshaft bearing caps and in the valve fastening.

Timing side

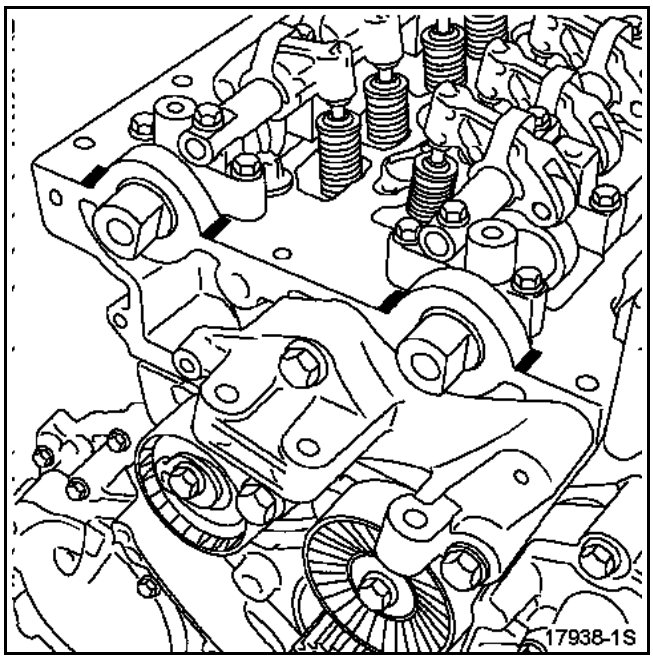

Flywheel side

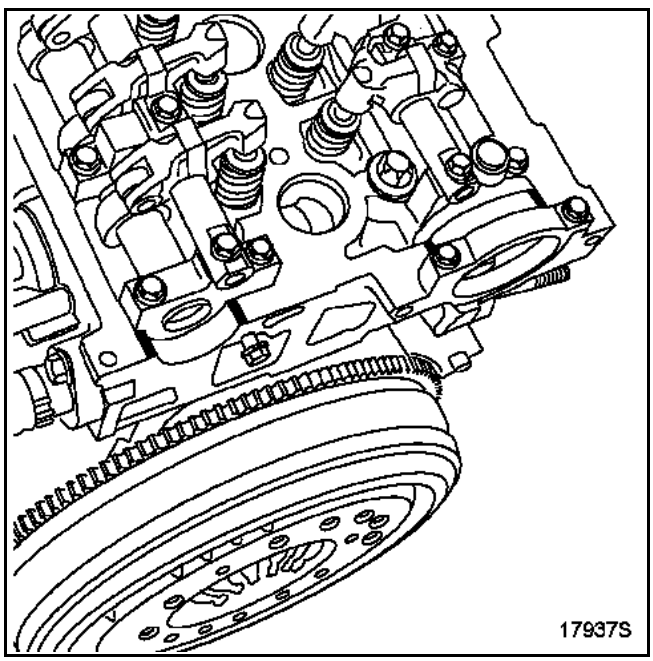

Fit all the seals on the cylinder head cover.

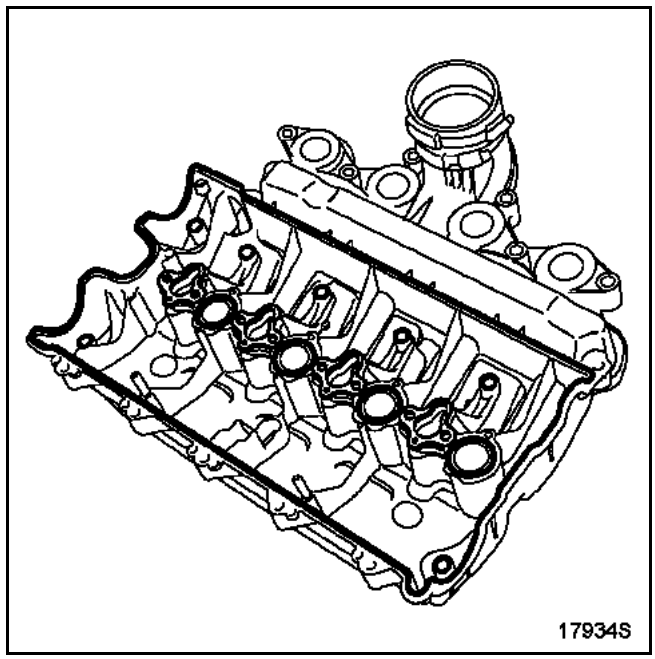

GETtheMANUALS.org

Refit:
– the cylinder head cover/inlet manifold,
– the cylinder head cover mounting bolts so that they touch, by applying a drop of **Loctite Frenbloc** on the bolts (1-2-4-6-8-10-12-13).

Tighten the bolts to a torque of **1.2 daNm** in the recommended order.

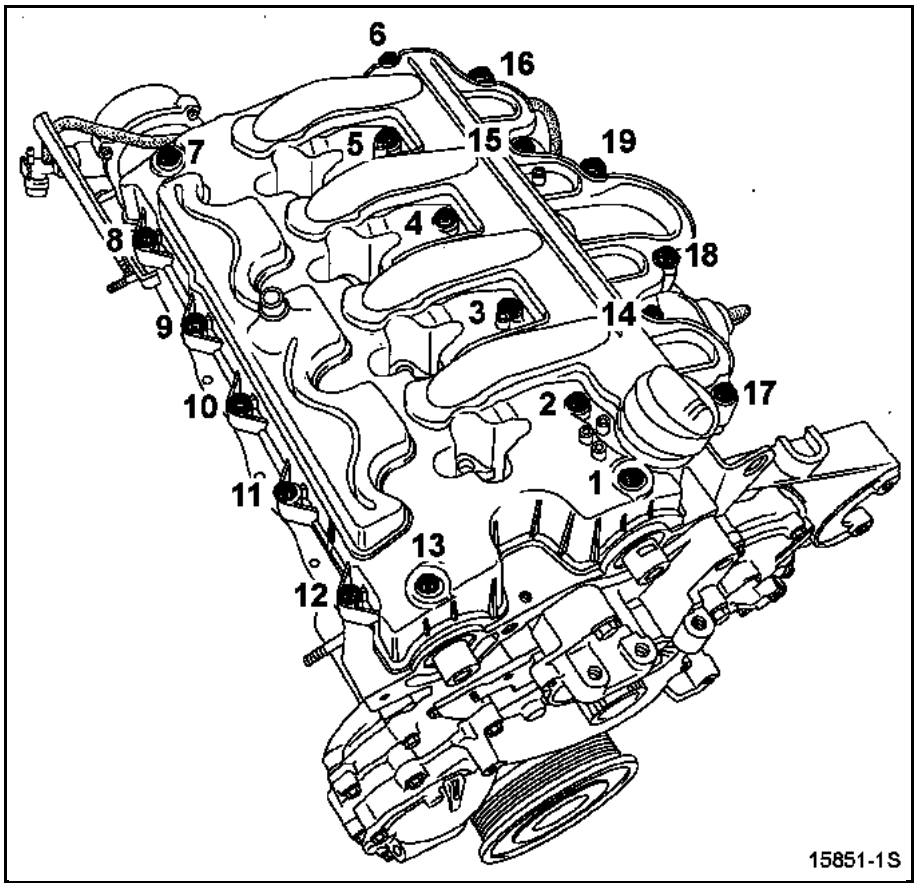

GETtheMANUALS.org

INJECTOR REFITTING PROCEDURE

Leave removal of the protection plugs from any component until last.

Clean the injector sockets and the injector bodies, as well as their brackets using a lint-free cloth (use the wipes recommended for this purpose, part no. **77 11 211 707**) dipped in clean solvent.

Dry off using a different new wipe.

Clean one of the old injector mounting bolts and tighten it to the end of the mounting hole thread to clean the tappings.

Fit new studs (1) and injector mounting spacers (2) after coating them with oil on the thread and tighten them as tightly as possible by hand **(0.2 daNm)**. **The studs and nuts must be replaced every time they are removed.**

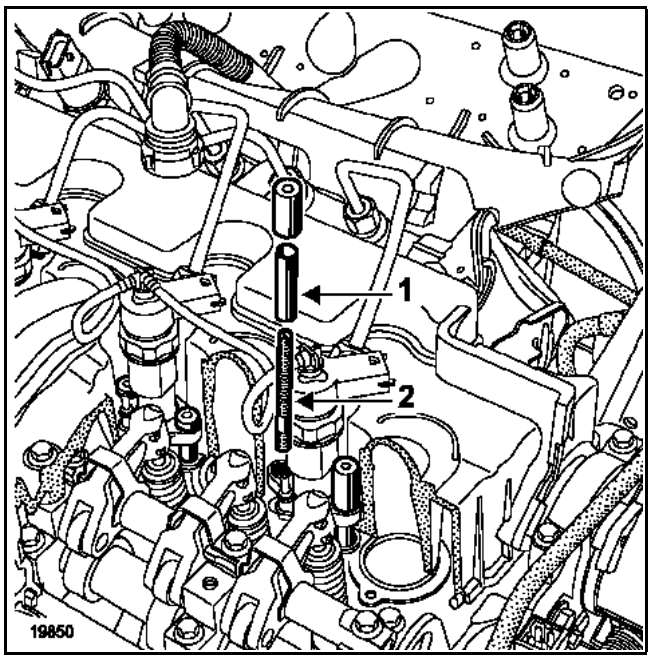

GETtheMANUALS.org

Fit a new injector head washer on every injector.

Fit the injector equipped with its bracket and locking spring ring.

Oil the threads of the nuts.

WARNING: tighten the nut (A) on the timing side first, then the bolt (B) on the flywheel side.

Tighten nut A to **0.6 daNm**, then nut B to **0.6 daNm**.

On the timing side first, then on the flywheel side.

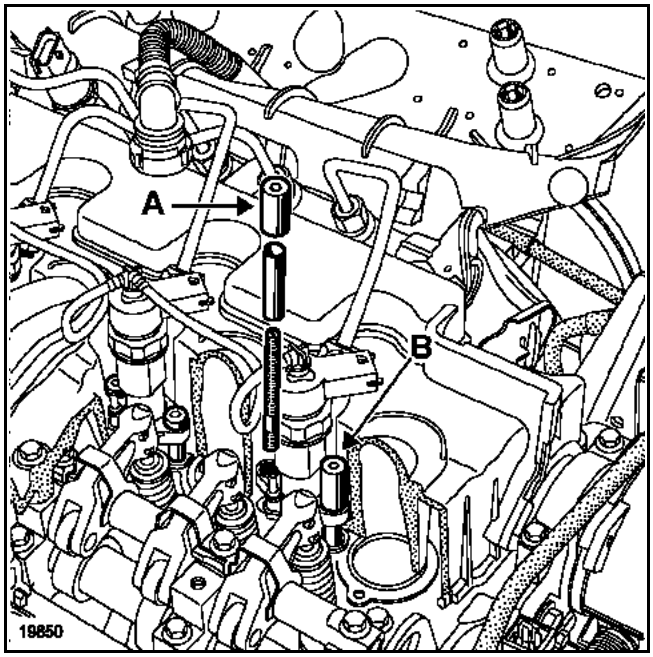

Retighten nut B only to **360° ± 30° (nut on the flywheel side).**

Loosen the three rail mounting bolts in order to release it.

Remove the rail plugs, the injector holders and the injection pipes.

Fit the injection pipes between the rail and the injectors and pretighten by hand until they touch.

Tighten the three rail mounting bolts to a torque setting of **2.3 daNm**).

Tighten the injector pipe connections on the injectors and the high pressure pump to a torque setting of **2.5 daNm**

Tighten the injection pipe connections on the rail to **2.5 daNm**.

Clip the pump/rail pipes mounting clip and tighten the two mounting bolts.

Refit the sealing partition, attached to the cylinder head cover by two nuts.

Refix the side partitions of the rail shield correctly.

Fold to the front and clip the rubber protector of the rail protector.

During any operations on the rail protector, you must ensure that the system components are fitted properly after refitting (see section 13B "Rail protector").

Non-observance of this advice may have serious consequences.

Carry out the rest of the refitting operation in the reverse order to removal.

Throw away the bag of plugs used during the operation.

GETtheMANUALS.org

Refit:
– the timing belt (see method described in **section 11A "Timing belt"**),
– the suspended engine mounting by tightening it to the correct torque (see **section 19A "Suspended engine mounting"**).

Refitting is the reverse of removal.

Use the diagnostic tool to erase any faults which may be stored by the injection computer before restarting the engine.

Re-prime the system by switching on the ignition several times, or turn the low pressure pump over with the diagnostic tool using the **"Actuator Command"** menu.

After any intervention, check that there are no leaks in the diesel circuit.

Proceed as follows:
– run the engine at idle speed until the fan starts up,
– accelerate several times under no load,
– carry out a road test,
– switch the ignition off and check that there is no leakage of diesel,
– check that the absorbent soundproofing material is not saturated with diesel fuel.

Fill and bleed the cooling system, (see **section 19A "Filling and Bleeding"**).

GETtheMANUALS.org

SPECIAL TOOLING REQUIRED	
Mot. 1659	Tool for locking the camshaft pulley
Mot. 1562	Tool for fitting the camshaft oil seal
Mot. 252-01	Tool for measuring piston protrusion
EQUIPMENT REQUIRED	
Torque wrench Angular torque wrench Cylinder head testing tool	

TIGHTENING TORQUES (in daNm)	
Camshaft casing bolt:	
– **M6**	**1.2**
– **M8**	**2.2**
Camshaft bearing stud	**4.3**
Camshaft bearing bolt	**2.2**
Coolant pipe bolt on the front cylinder head	**2.5**
Housing bolt	**2.5**
Camshaft pulley bolt	**12**

REMOVAL

Put the vehicle on a two-post lift.

Disconnect the battery.

Drain the cooling circuit through the lower radiator hose.

Remove:
– the timing belt (see **section 11A "Timing belt"**),
– the inlet manifold (see **section 12A "Inlet manifold"**),
– the **EGR** solenoid valve (see **section 12B "EGR solenoid valve"**),
– the high pressure pipes (see **section 13B "High Pressure Pipes"**),
– the injector rail (see **section 13B "Injector rail"**),
– the injectors (see **section 13B "Injectors"**),
– the high pressure pipes on the injection pump.

Method for the front bench cylinder head:

Remove:
– the camshaft pulleys using tool **Mot. 1659**,
– the camshaft position sensor,
– the bolt (B),
– the housing (C).

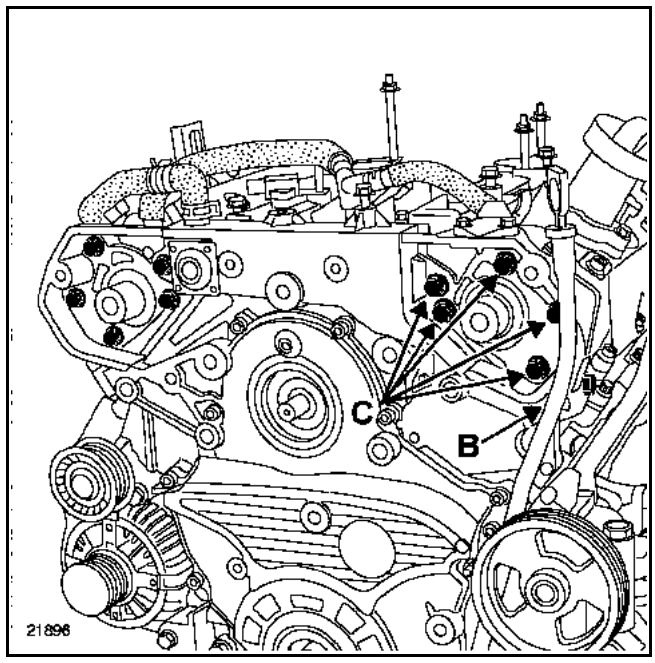

GETtheMANUALS.org

Remove:
– the camshaft casing,

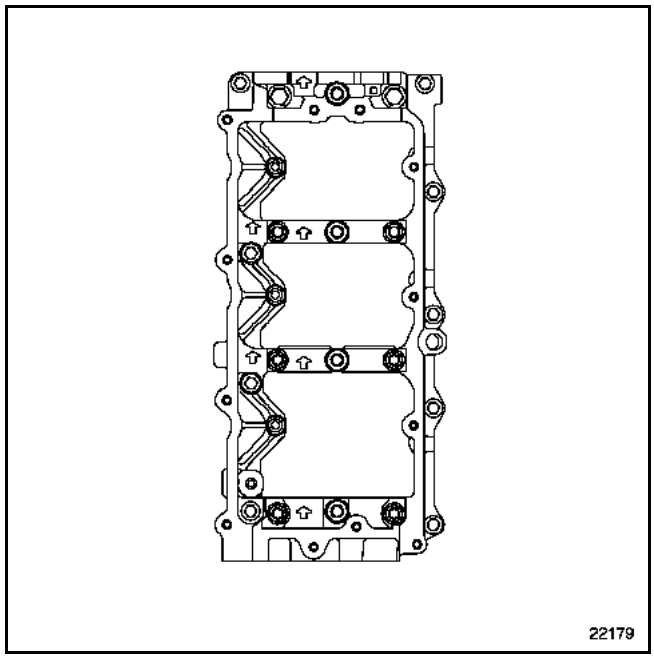

– the pistons marking their positions,

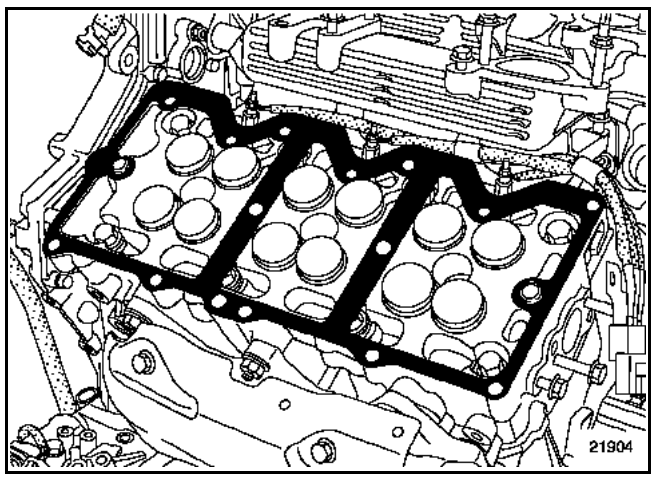

– the front bench lifting bracket mountings,
– the front exhaust manifold heat shield,
– the front bench exhaust manifold mountings on the intermediate pipe connected to the turbocharger (D),
– the coolant pipe bolt on the front bench cylinder head (E),

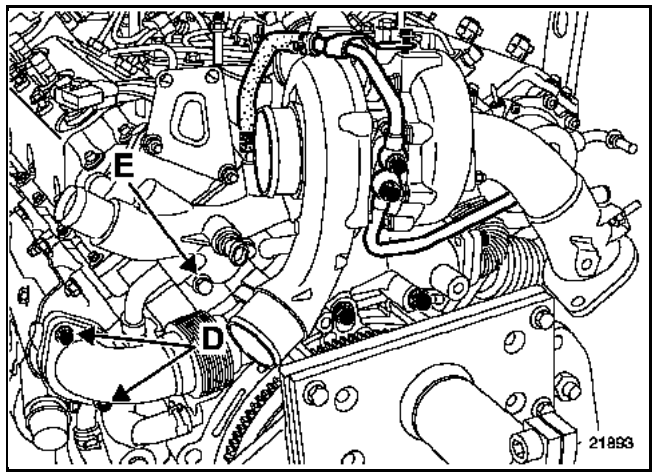

– the oil pipe bolts on the front bench cylinder head,
– the bolts on the front bench cylinder head,
– the front bench cylinder head.

GETtheMANUALS.org

Method for the rear bench cylinder head:

Remove:
– the camshaft pulley using tool **Mot. 1659**,
– the housing (F),

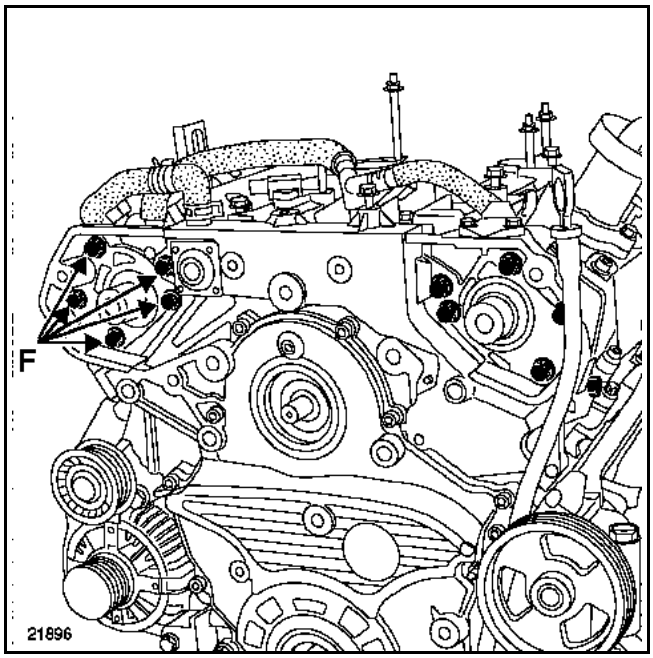

– the camshaft casing,

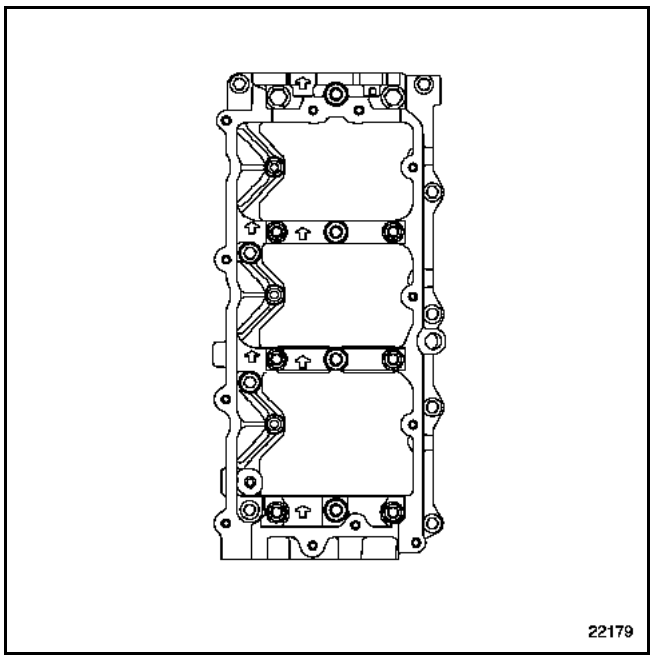

– the pistons, marking their positions,
– the alternator bracket bolt on the rear bench cylinder head,
– the turbocharger outlet pipe (G).

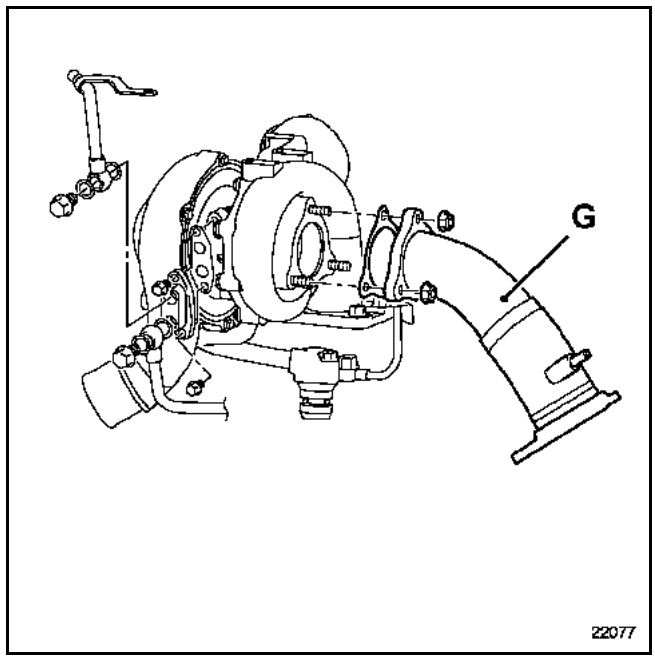

Release the coolant pipe from the rear cylinder head.

Remove:
– the bolts from the rear bench cylinder head,
– the rear bench cylinder head.

GETtheMANUALS.org

CLEANING

It is very important not to scratch the gasket faces of any aluminium component.

Use the **Décapjoint** product to dissolve any remains of the gasket still adhering.

Wear gloves whilst carrying out the following operation.

Apply the product to the parts to be cleaned; wait about ten minutes, then remove it using a wooden spatula.

Please take the greatest care during this operation to prevent the entry of foreign bodies into the oil galleries (channels located in the cylinder block and in the cylinder head).

CHECKING THE GASKET FACE

Check that there is no gasket face bow.

Maximum deformation: **0.07 mm**.

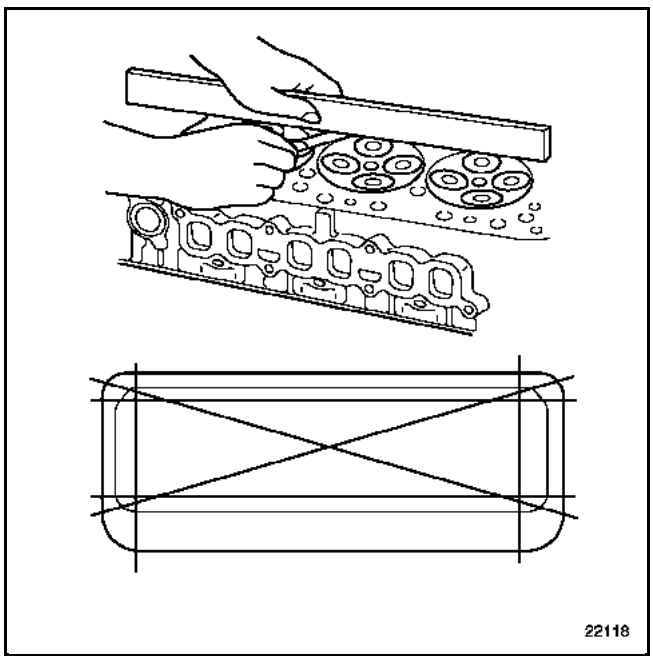

The maximum gasket face bow of the inlet and exhaust manifolds is: **0.075 mm**.

No regrinding of the cylinder head is permitted.

Test the cylinder head to detect possible cracks using the cylinder head test tools (a container and a kit for the particular cylinder head, plug, sealing plate, blanking plate). The approval number of the cylinder head test container is **664000**.

MEASURING PISTON MOVEMENT

Clean the piston heads in order to eliminate any traces of deposits.

Turn the crankshaft one turn in its operating direction to bring piston no.1 close to Top Dead Centre.

Put tool **Mot. 252-01** in position.

Fit tool **Mot. 252-01** equipped with a gauge on its thrust plate **Mot. 252-01**, and find top dead centre of the piston.

NOTE: all the measurements should be carried out at **15°** in relation to the engine's longitudinal axis.

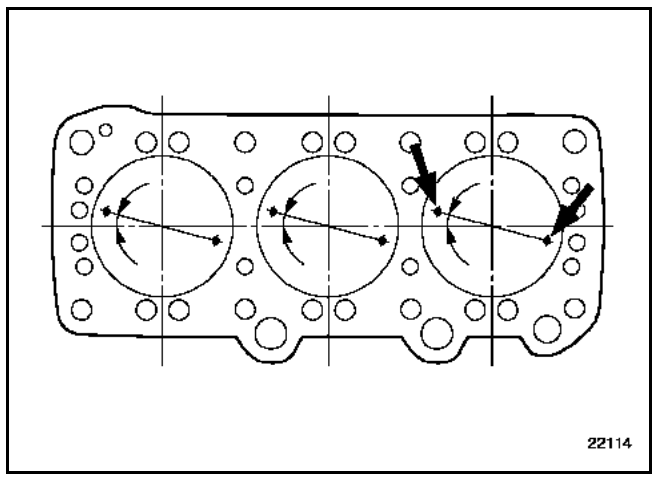

GETtheMANUALS.org

CHOICE OF CYLINDER HEAD GASKET

Marking	Thickness	Piston protrusion
1 hole	1.15 mm	0.40 to 0.46 mm
2 holes	1.2 mm	0.47 to 0.53 mm
3 holes	1.25 mm	0.54 to 0.60 mm

NOTE: the cylinder head gaskets are identified as follows:
– the number of holes denotes the thickness of the cylinder head gasket (1)
– the marking **L** is for the front bench (2),

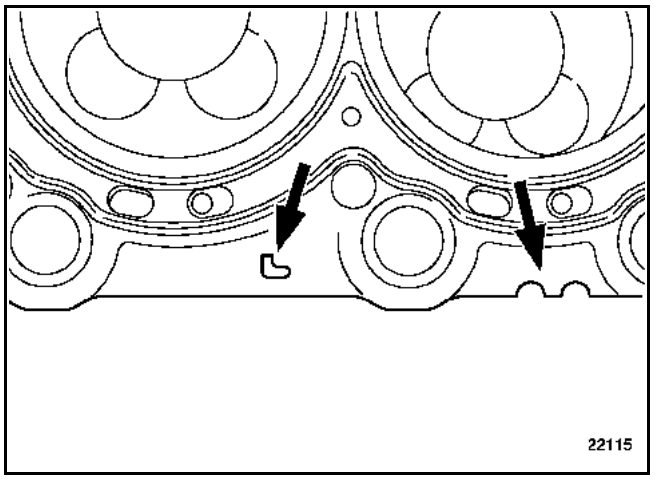

– the **R** marking is for the rear bench (3).

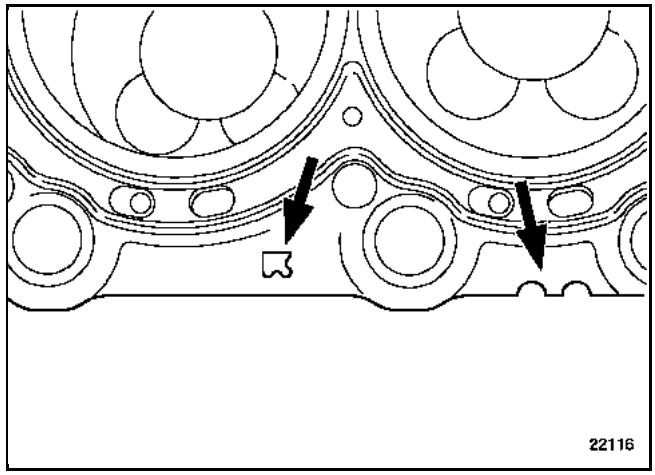

REFITTING (special notes)

NOTE: Use a syringe to remove any oil which may have entered the cylinder head mounting bolt holes to ensure correct tightening of the bolts.

Fit the cylinder head gaskets, centred by two dowels.

Bring the pistons to mid-stroke position to prevent them from coming into contact with the valves as the cylinder head is tightened.

Centre the cylinder head on the dowels.

GETtheMANUALS.org

Tighten the cylinder heads using a torque wrench and an angular wrench (see **section 07A "Tightening the cylinder head"**).

Lubricate the pistons then refit them.

Refit the camshaft casings having fitted them with new seals and centred them on dowels (3).

Front bench

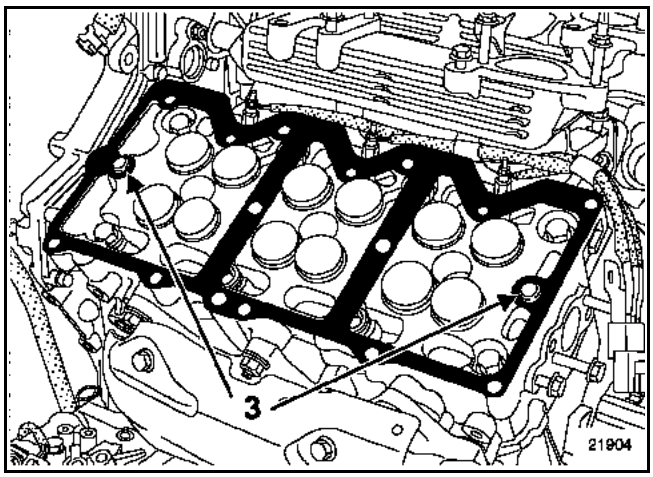

Rear bench

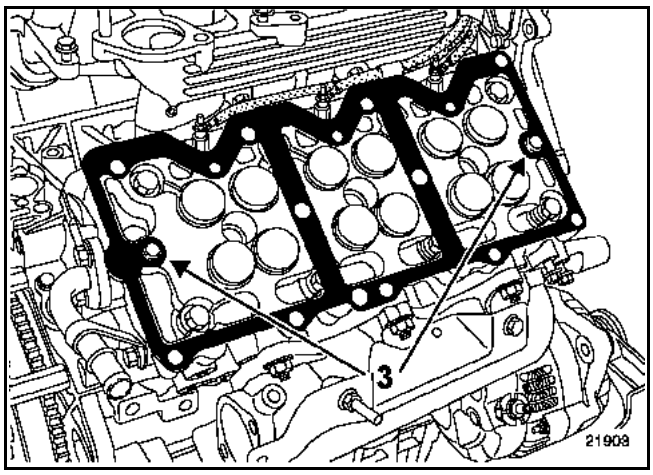

Tighten the casings to the correct torque in the order shown below.

Rear bench

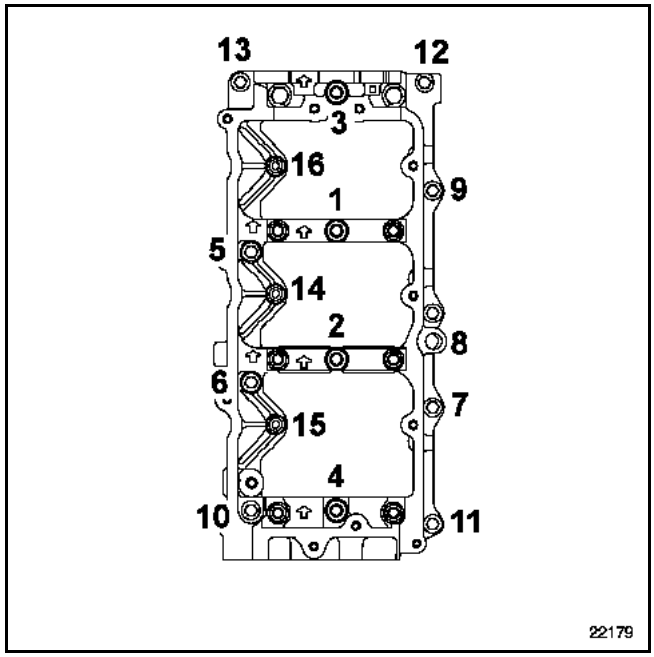

Front bench

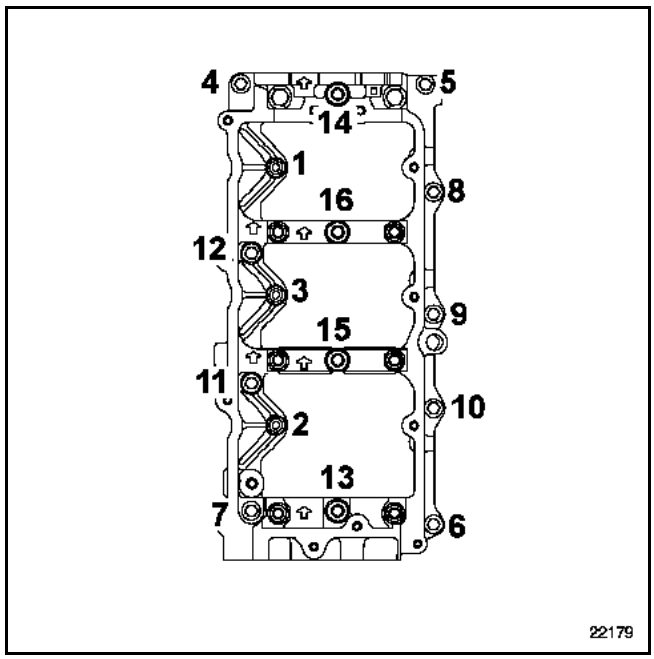

GETtheMANUALS.org

Refit the coolant pipe with new gaskets and tighten to a torque of **2.5 daNm**. on the front cylinder head.

Refit the housings using a **1.2 mm** diameter piece of cord with **THREEBOND** according to the diagram below, having first:
– cleaned and degreased the sealing surfaces,
– removed the camshaft seals and housings.

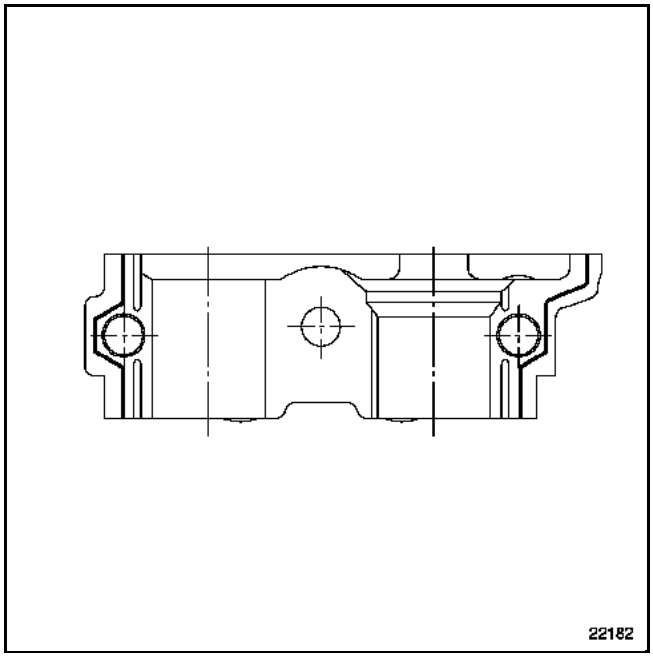

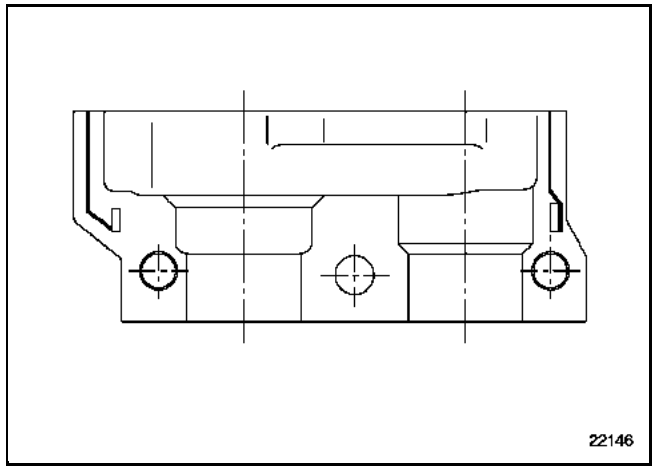

Tighten the bolts with diameter:
– **M6** to a torque of **1.2 daNm**,
– **M8** to a torque of **2.2 daNm**.

Tighten the camshaft bearings to a torque of **2.5 daNm**.

Tighten the studs to a torque of **4.3 daNm** except for the two outer bearing studs which should be tightened to a torque of **2.2 daNm**.

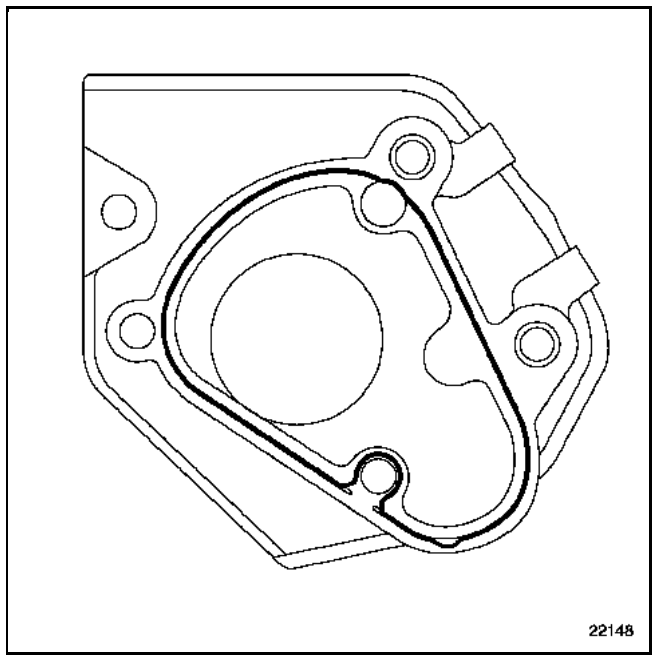

GETtheMANUALS.org

NOTE: the O-ring must be replaced (4).

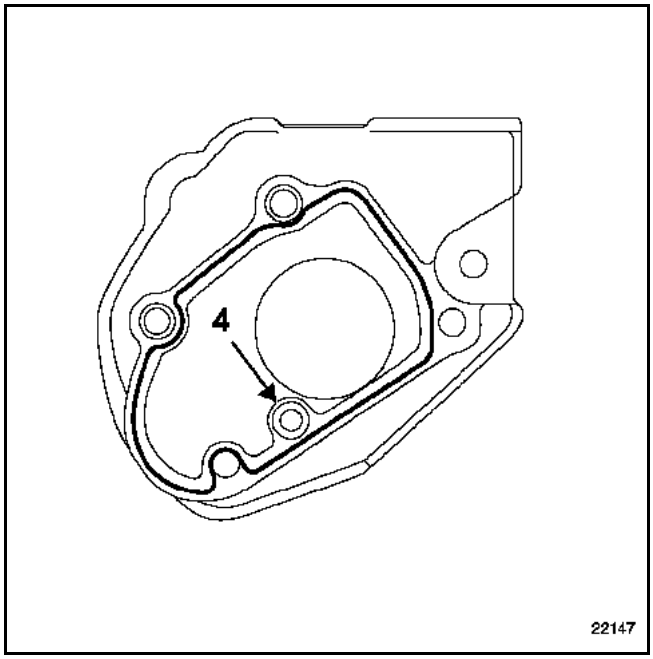

Tighten the housings to a torque of **2.5 daNm**.

Refit the camshaft seals with tool **Mot. 1562**.

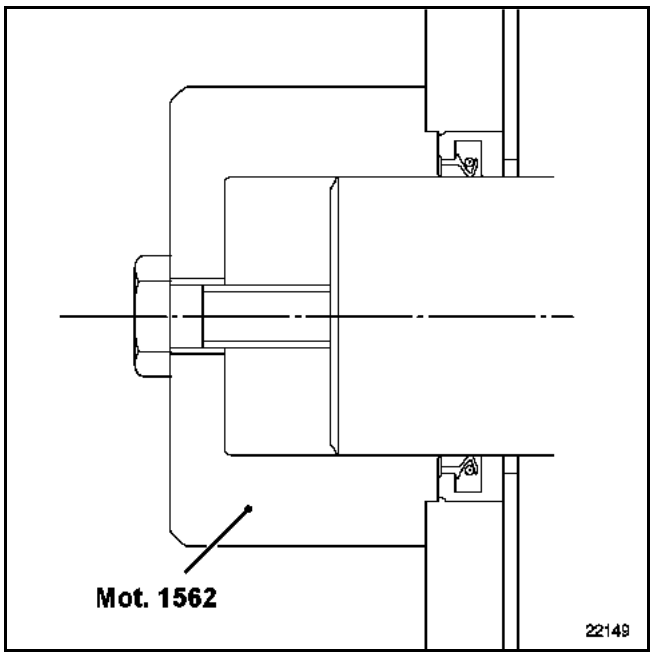

Refit the camshaft pulleys:
– on the rear bench, by aligning the mark at (1) (**RH**) on the pulley with the mark at (A),

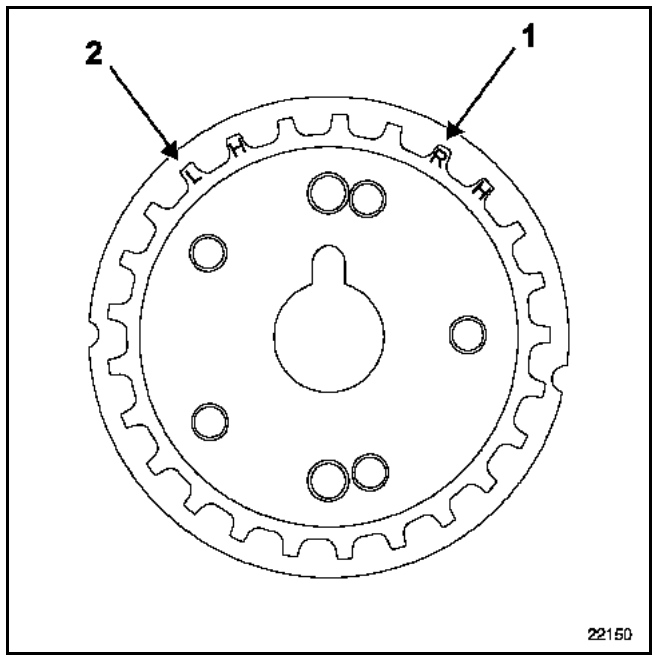

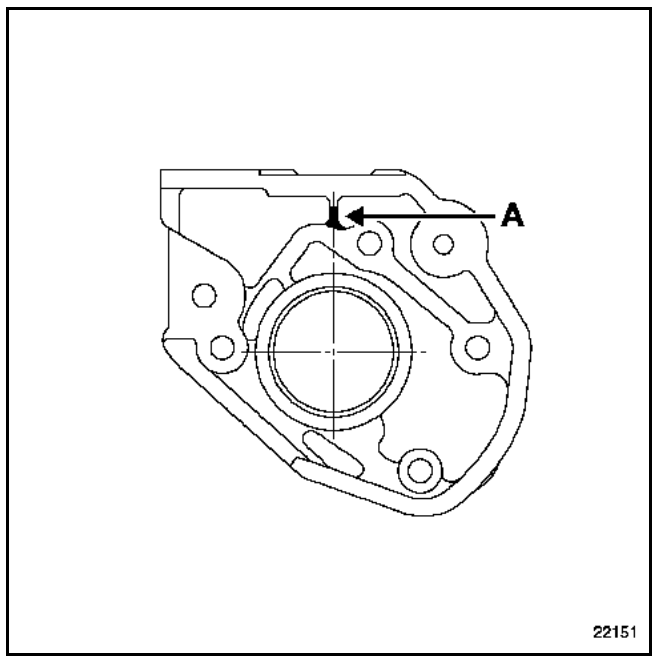

GETtheMANUALS.org

– on the front bench, by aligning the mark at (2) (**LH**) with the mark at (B).

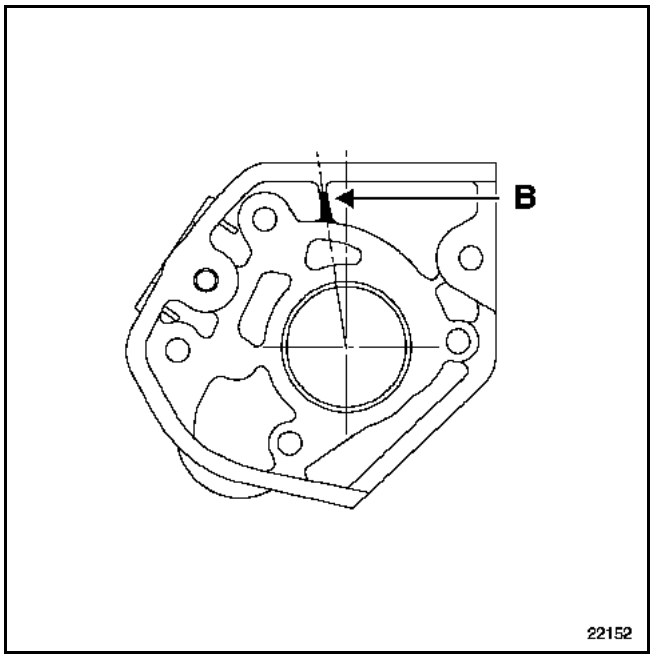

Tighten the camshaft pulleys to a torque of **12 daNm**.

Refit:
– the injectors (see **section 13B "Injectors"**),
– the high pressure pipes on the injection pump.
– the injector rail (see **section 13B "Injector rail"**),
– the high pressure pipes (see **section 13B "High Pressure Pipes"**),
– the **EGR** solenoid valve (see **section 12B "EGR solenoid valve"**),
– the inlet manifold (see **section 12A "Inlet manifold"**),
– the timing belt (see method described in **section 11A "Timing belt"**).

Continue the refitting procedure in the reverse order to removal.

Fill and bleed the cooling system, (see **section 19A "Filling and Bleeding"**).

GETtheMANUALS.org

Removing and refitting the cylinder head gaskets requires the removal of the engine - gearbox assembly. To follow the conditions for engine hygiene, refer to **manual V4Y**.

GETtheMANUALS.org

Refer to the **G9T manual** for the features of camshaft removal and refitting as well as for the procedure for replacing camshaft seals.

GETtheMANUALS.org

SPECIAL TOOLING REQUIRED	
Mot. 929-01	Tool for positioning camshaft wear compensation sprockets
Mot. 1562	Tool for fitting camshaft oil seal
Mot. 1659	Tool for locking the camshaft pulley
Mot. 1662	Tool for adjusting the valve clearance
EQUIPMENT REQUIRED	
Torque wrench Angular torque wrench	

TIGHTENING TORQUES (in daNm)	
Camshaft casing bolt:	
– M6	**1.2**
– M8	**2.2**
Bearing stud inside the camshafts	**4.3**
Bearing stud outside the camshafts	**2.2**
Camshaft bearing bolt	**2.2**
Camshaft closure housing bolt	**2.5**
Camshaft pulley bolt	**12**

REMOVAL

Put the vehicle on a two-post lift.

Disconnect the battery.

Drain the cooling circuit through the lower radiator hose.

Remove:
– the timing belt (see **section 11A "Timing belt"**),
– the inlet manifold (see **section 12A "Inlet manifold"**),
– the high pressure pipes (see **section 13B "High Pressure Pipes"**),
– the catalytic converter (see **section 19B "Catalytic converter"**).
– the injectors (see **section 13B "Injectors"**),

Method for the front bench camshafts:

Remove:
– the camshaft pulley using tool **Mot. 1659**,
– the camshaft position sensor (A),
– the gauge guide mounting on the housing (B),
– the bolt (C),
– the housing (D).

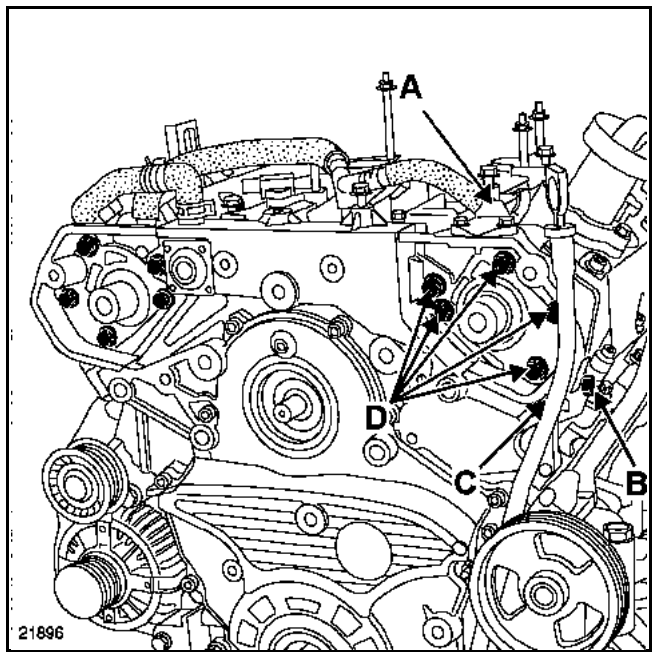

GETtheMANUALS.org

IDENTIFICATION OF THE CAMSHAFTS

Mark the camshafts before removing them from the engine.

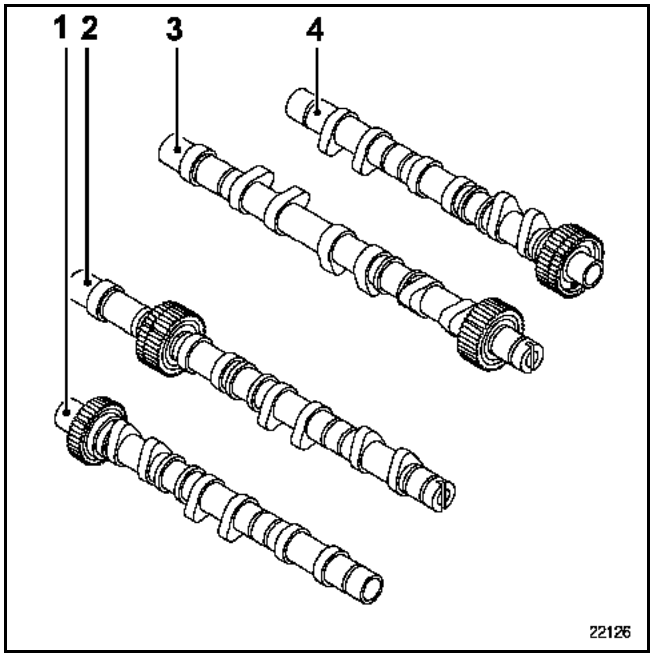

1 Front bench outlet camshaft
2 Front bench inlet camshaft
3 Rear bench inlet camshaft
4 Rear bench outlet camshaft

Remove:
– the camshaft bearings, marking their positions,

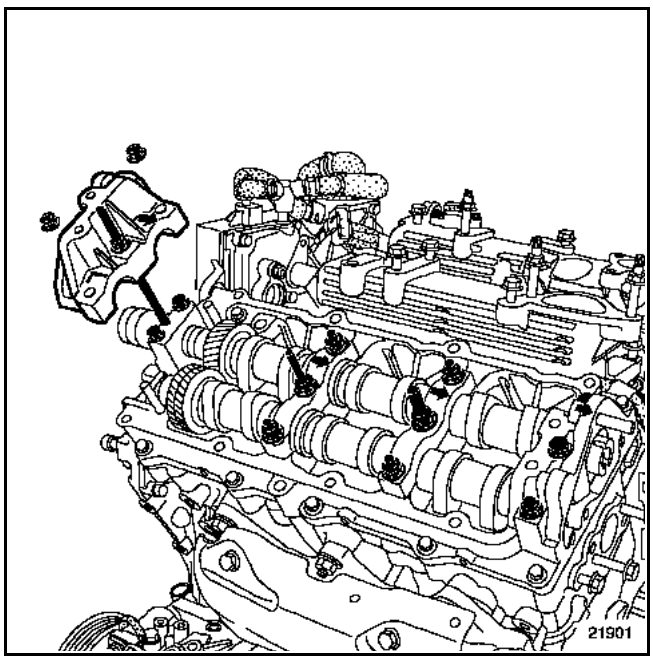

– the two camshafts, marking them.

Method for the rear bench camshafts:

Remove:
– the camshaft pulley using tool **Mot. 1659**,
– the housing (E),

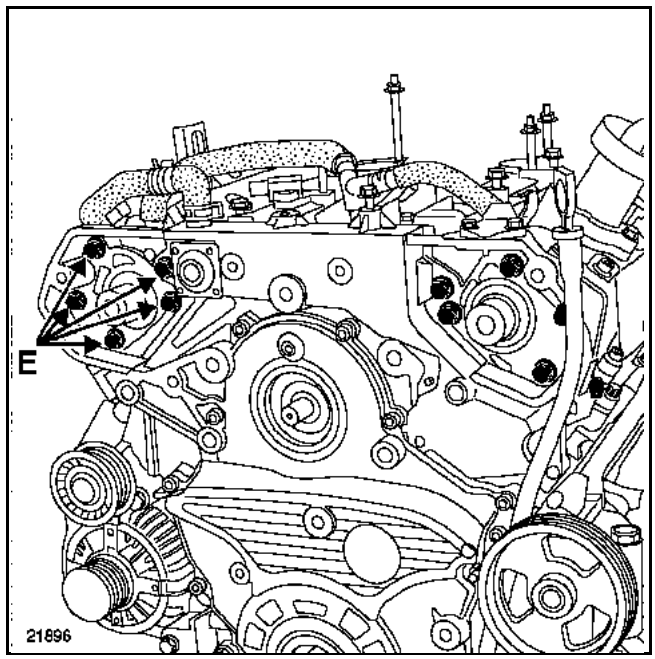

– the camshaft bearings, marking their positions,

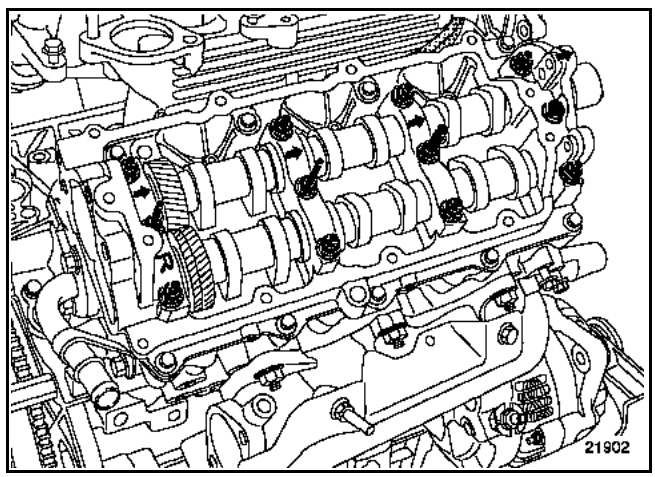

– the camshafts, marking them.

GETtheMANUALS.org

CLEANING

It is very important not to scratch the gasket faces of any aluminium component.

Use the **Décapjoint** product to dissolve any remains of the gasket still adhering.

Wear gloves whilst carrying out this operation.

Apply the product to the parts to be cleaned; wait about ten minutes, then remove it using a wooden spatula.

REFITTING

Lubricate the cams and bearings.

Correctly position the wear compensation sprocket, by aligning its teeth with those of the camshaft sprocket using tool **Mot. 929-01**

Insert a **3 mm** pin (F) to keep the wear compensation sprocket in place in relation to the camshaft sprocket.

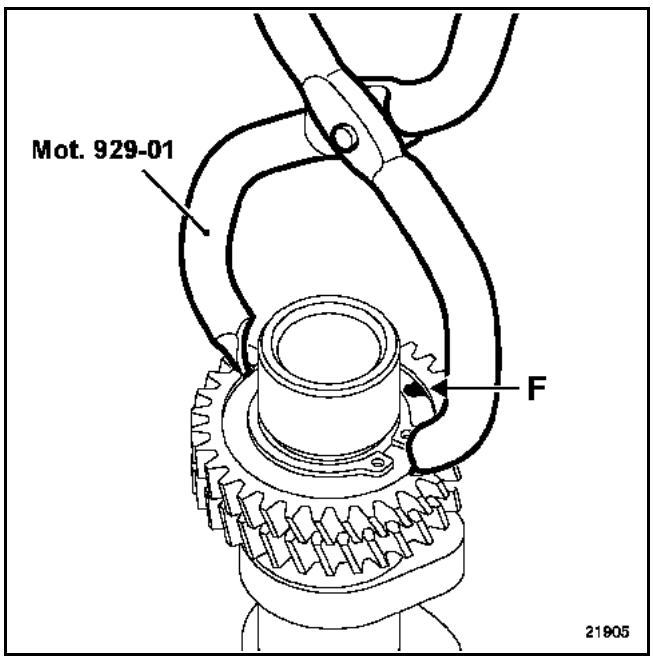

Position the camshafts according to the setting at (G).

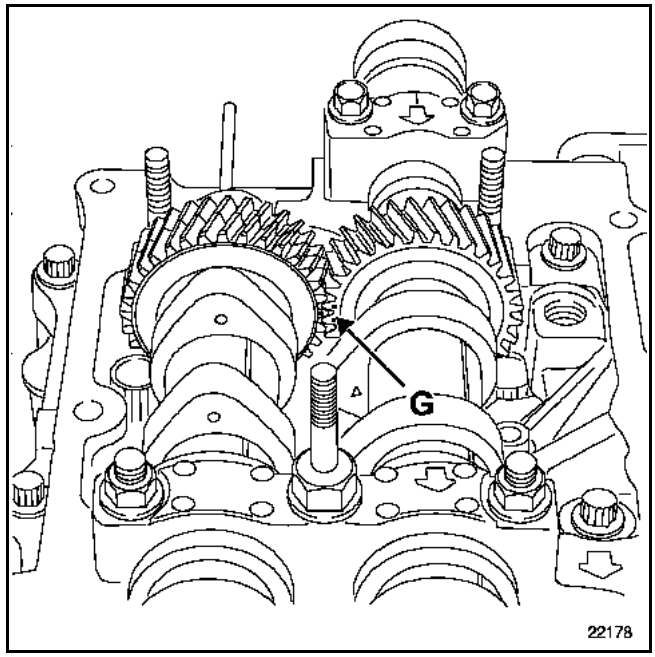

Refit the timing housings using a **1.2 mm** diameter piece of **THREEBOND** cord according to the diagram below, having first:
– cleaned and degreased the sealing surfaces,
– removed the camshaft seals and housings.

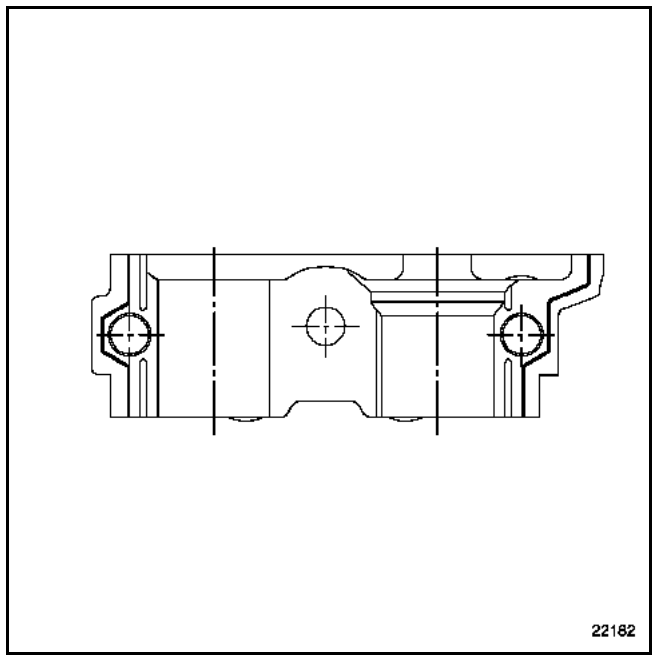

GETtheMANUALS.org

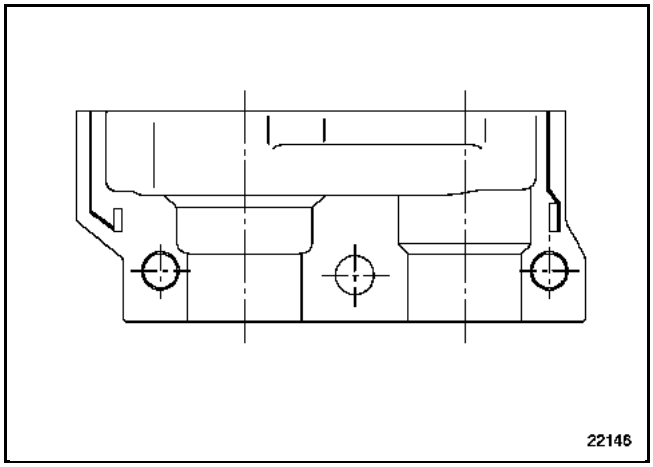

Tighten the bolts with diameter:
– **M6** to a torque of **1.2 daNm**,
– **M8** to a torque of **2.2 daNm**.

Tighten the camshaft bearings to a torque of **2.2 daNm**.

Tighten the studs to a torque of **4.3 daNm** except for the two outer bearing studs which should be tightened to a torque of **2.2 daNm**.

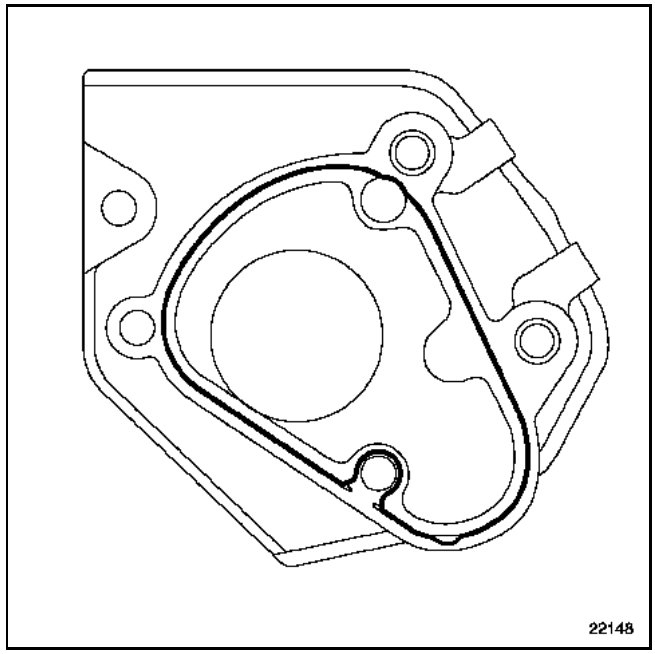

NOTE: the O-ring must be replaced (C).

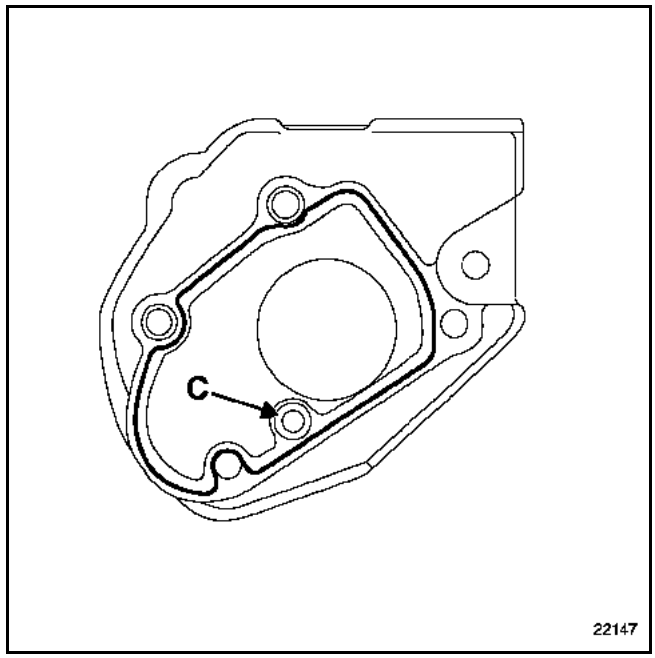

Tighten the housings to a torque of **2.5 daNm**.

GETtheMANUALS.org

Refit the camshaft seals with tool **Mot. 1562**.

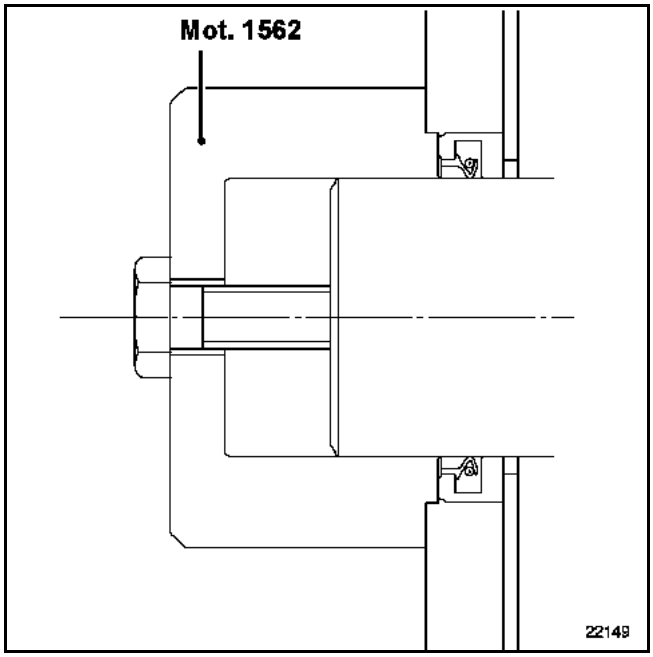

Refit the camshaft pulleys:
– on the rear bench, by aligning the mark at (1) (**RH**) on the pulley with the mark at (A),

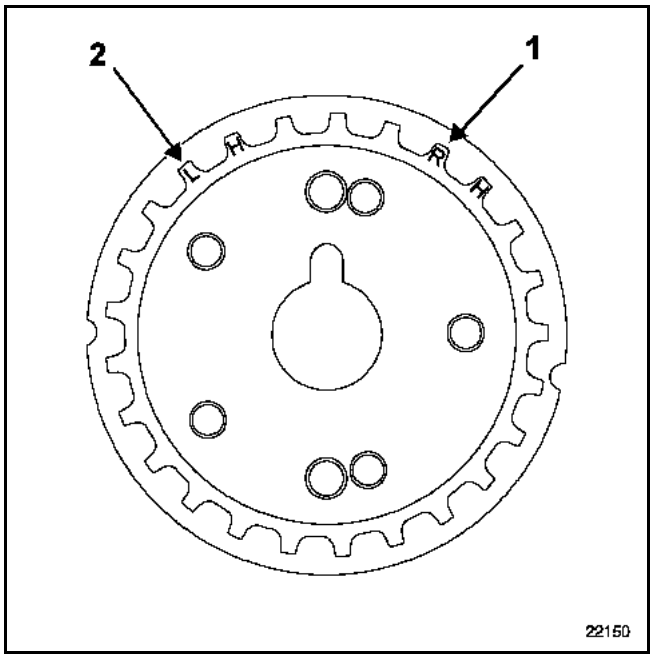

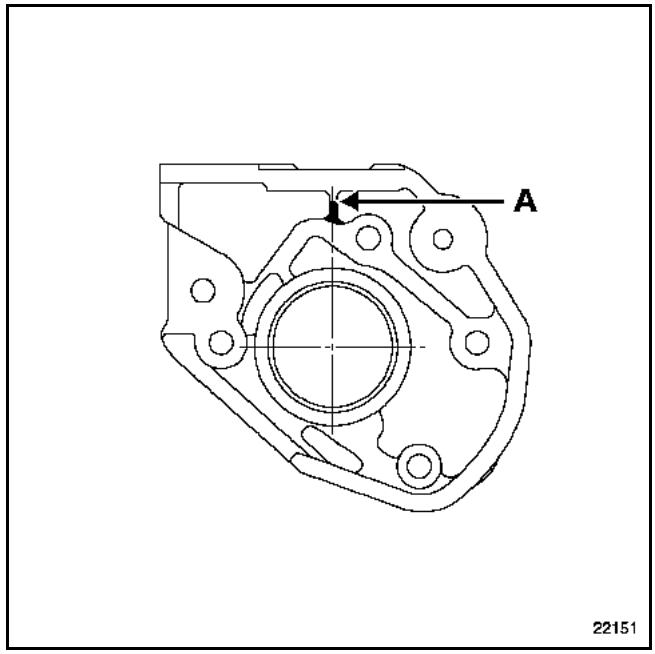

– on the front bench, by aligning the mark at (2) (**LH**) with the mark at (B).

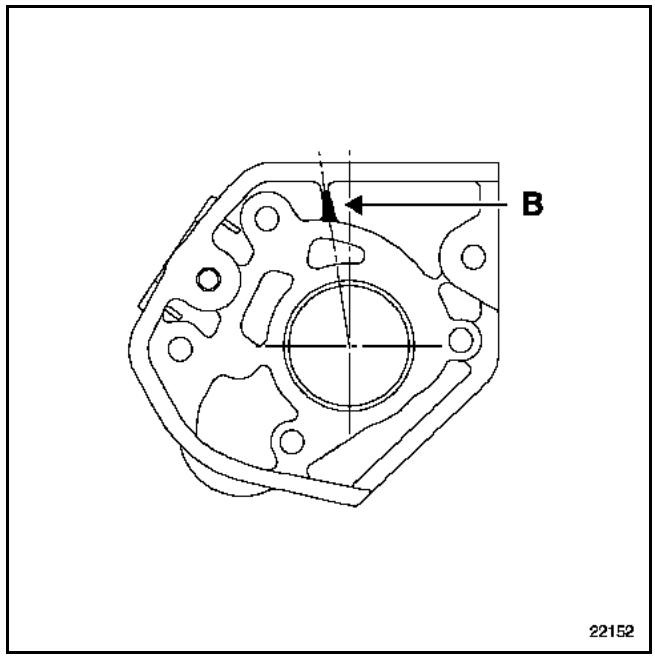

Tighten the camshaft pulleys to a torque of **12 daNm**, using tool **Mot. 1659** to immobilise the camshaft pulleys.

GETtheMANUALS.org

Refit the timing belt (see method described in section **11A "Timing belt"**).

CHECKING THE VALVE CLEARANCE

NOTE: the valve clearance is carried out with the engine cold. The adjustment value is 0.4 mm.

Set the engine to top dead centre by aligning the mark (H) on the crankshaft pulley and the fixed mark (I).

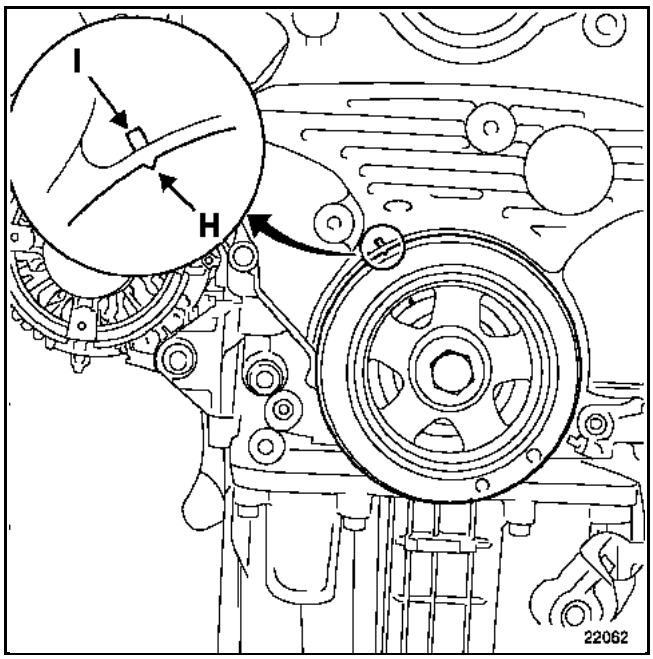

Cylinder marking:

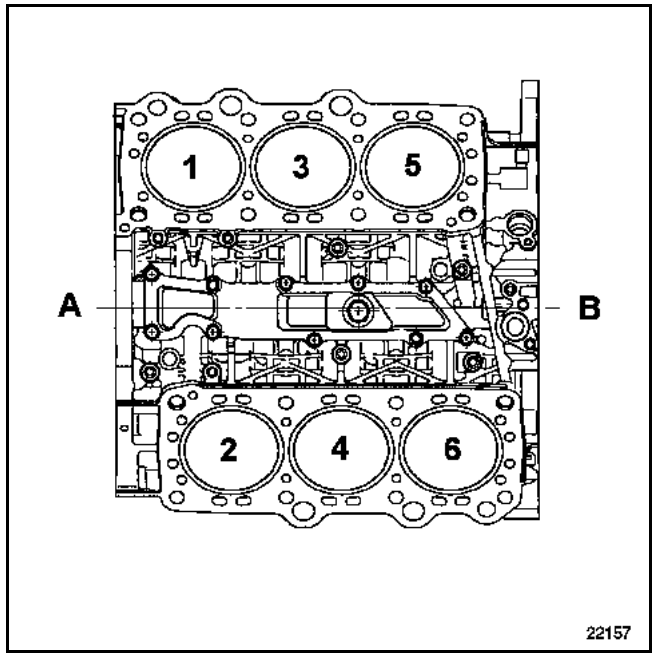

A: timing side
B: flywheel side

Measure the valve clearance of **cylinder no. 1**, the cam lobes should be rear facing.

Position the cam lobes of **cylinder no. 2** so that they are rear facing and turn the engine in the operating direction. Measure the valve clearance.

Repeat the operation for **cylinder nos. 3, 4, 5 and 6**, turning the engine in the operating direction and following the injection order:
1→2→3→4→5→6.

GETtheMANUALS.org

SETTING THE VALVE CLEARANCE

Position the cam lobes of the relevant cylinder so that they are rear facing then gently rotate the engine in the operating direction to prevent the valve and piston from touching while tool **Mot. 1662** is fitted.

Turn the two hydraulic pistons of the cylinder concerned and position the slot towards the outside of the camshafts to enable the valve to be released.

Compress the valve spring using tool **Mot. 1662**.

The tool marked "I" is used to change the valves of the inlet camshaft and the tool marked "E" is used to change the valves of the outlet camshaft.

Release the valve adjusters with a screwdriver and an extension magnet.

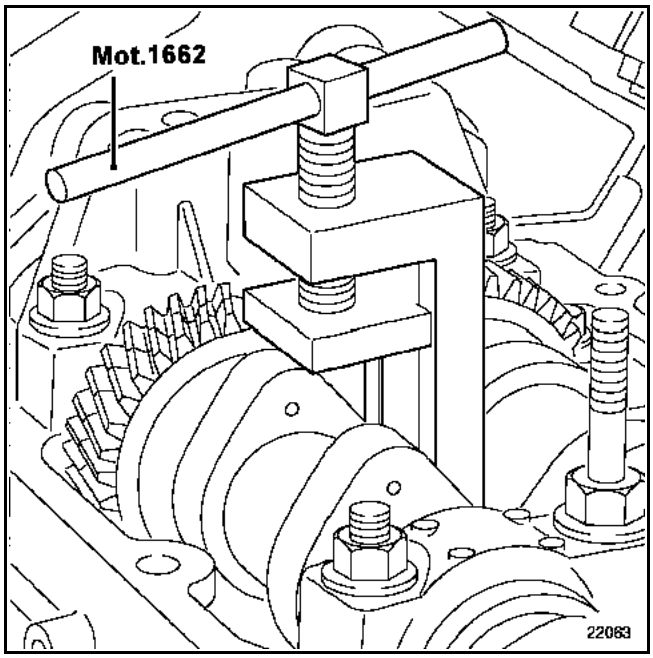

Refit:
- the injectors (see **section 13B "Injectors"**),
- the high pressure pipes (see **section 13B "High Pressure Pipes"**),
- the inlet manifold (see **section 12A "Inlet manifold"**),
- the catalytic converter (see **section 19B "Catalytic converter"**).

Continue the refitting procedure in the reverse order to removal.

GETtheMANUALS.org

Removing and refitting the camshafts requires the removal of the engine - gearbox assembly.

To follow the conditions for engine hygiene, refer to **manual V4Y**.

GETtheMANUALS.org

Vehicles	Gearbox	Engine						
		Type	Index	Bore (mm)	Stroke (mm)	Cubic capacity (cc)	Compression ratio	Depollution standard
BJ0K BJ0P	PK 6	F4R	762	82.7	93	1998	9.5/1	IF05 EU 00
BJ0K BJ0P	SU1	F4R	763	82.7	93	1998	9.5/1	IF05 EU 00

Tests carried out at idle speed*					Fuel (minimum octane rating)
Pollutant emission **					
Engine speed (rpm)	CO (%) (1)	CO_2 (%)	HC (ppm)	Lambda (λ)	
750 rpm	0.5 max	14.5 max	100 max	$0.97 < \lambda < 1.03$	Super unleaded (95 RON)

(1) at **2500 rpm**, the **CO** content should be **0.3** max.

* For a coolant temperature above **80 ºC** and after the engine speed has stabilised at **2500 rpm** for approximately **30 seconds**

** Refer to your country specification for the values required by legislation.

Temperature in °C ± 1	-10	25	50	80	110
Negative temperature coefficent air sensor: resistance in ohms (Ω)	10450 to 8625	2065 to 2040	815 to 805	-	-
Negative temperature sensor: resistance in ohms (Ω)	-	2360 to 2140	850 to 770	290 to 275	117 to 112

GETtheMANUALS.org

DESCRIPTION	MARQUE/TYPE	SPECIAL NOTES
Injection and ignition computer	**SAGEM S 2000 T**	**112-track** Sequential multipoint injection Static ignition
Motorised throttle valve **Ø 40 mm** (double track integrated potentiometer)	**MGI/VDO**	Engine resistance **= 1.6 ± 0.3 Ω** Potentiometer resistance **= 1500 ± 300 Ω**
Accelerator pedal sensor	**HELLA**	Dual track potentiometer Track 1 resistance = **1200 ± 480 Ω** Track 2 resistance = **1700 ± 680 Ω**
Ignition coils	**NIPPONDENSO**	Four **V4** pencil coils NIPPONDENSO: Primary resistance **≈ 0.5** Ω Secondary resistance: **6.8 ± 1 KΩ**
Spark plugs	**CHAMPION RC 8 PYCB**	Tightening torque: **2.5 to 3 daNm**
Plenum chamber and turbocharger pressure sensors	**DELCO**	Voltage output with the ignition on and engine stopped (across tracks A and B): **-1.9 V** for an atmospheric pressure of **1013 mbar**. Voltage output **> at 1.9 V** for an atmospheric pressure **> of 1030 mbar** and voltage output **< at 1.9 V** for an atmospheric pressure **< of 1013 mbar** Replace the seal each time it is removed
Pinking sensor	**SAGEM**	Piezoelectric type Tightening torque: **2 daNm**
Magnetic sensor (TDC and engine speed)	**SIEMENS**	Variable reluctance type Resistance = **200 to 270 Ω**
Oxygen sensors (upstream and downstream)	**BOSCH**	Heater resistance = **9 Ω at 20 °C** Internal resistance = **1 KΩ maximum** Rich mixture **> 800 mV** Lean mixture **< 50 mV**
Injectors	**MAGNETI-MARELLI PICO**	Resistance: **14.5 ± 0.7Ω at 20 °C**

GETtheMANUALS.org

DESCRIPTION	MARQUE/TYPE	SPECIAL NOTES
Air sensor	**JEAGER**	Negtative temperature coefficient (see table) Resistance: **2500 Ω at 20 °C**
Coolant sensor	**JEAGER**	Negtative temperature coefficient (see table) Resistance: **3500 Ω at 20 °C**
Fuel vapour absorber solenoid valve	**SAGEM**	Resistance: **26 ± 4 Ω at 23 °C**
Waste-gate control solenoid valve	**EATON**	Resistance: **30 ± 2 Ω at 23 °C**
Submerged fuel pump incorporating the petrol filter and the pressure regulator	**BOSCH**	Pressure: **3.5 bar ± 0.06** Minimum flow: **80 to 120 l/h**
Idle speed plenum chamber pressure	**-**	**320 ± 50 mbar**
Coolant pump (turbocharger cooling)	**BOSCH**	**Track 1:** - motor **Track 2:** + motor
Thermoplungers	**-**	Resistance: **0.45 ± 0.05 Ω at 20 °C**

GETtheMANUALS.org

Vehicles	Gearbox	Engine						
		Type	Suffix	Bore (mm)	Stroke (mm)	Cubic capacity (cc)	Compression ratio	Depollution standard
BJ0V	SU1	V4Y	701	95.5	81.4	3498	10.3/1	IF2005

Checks performed at idle speed (warm engine)*					Fuel*** (minimum octane rating)
Pollutant emission **					
Idle speed (rpm)	CO (%) (1)	CO_2 (%)	HC (ppm)	Lambda (λ)	
650	0.5 max	15 max	100 max	0.97<λ<1.03	Super unleaded (98 RON)

(1) at **2500 rpm**, the **CO** content should be **0.3** max.

* For a coolant temperature above **80 ºC** and after the engine speed has stabilised at **2500 rpm** for approximately **30 seconds**

** Refer to your country specification for the values required by legislation.

*** **91 RON** unleaded compatible.

Temperature in °C ± 1	-10	20	25	40	50	80	90	110
Negative temperature coefficient coolant sensor resistance in ohms (Ω)	7000 to 11400	2100 to 2900	1900 to 2100	1000 to 1500	680 to 1000	310 to 370	236 to 260	143 to 153
Negative temperature coefficient air sensor resistance in ohms (Ω)	7940 to 9310	2100 to 1900	1900 to 2100	1000 to 1500	680 to 1000	310 to 370	236 to 260	-

GETtheMANUALS.org

DESCRIPTION	MARQUE/TYPE	SPECIAL NOTES
Injection computer	**HITACHI / HI-EWR20**	Sequential multipoint injection computer **121-track (81 and 40 tracks)** computer
Fuel pump	-	It is part of a pump-sender-filter unit assembly Pressure of **3.5 ± 0.06 bar**
Motorised throttle body (integrated double track and 70 mm diameter)	**HITACHI / RM 70-04**	Direct current electric motor Track allocation: **Track A1:** + 5 V supply **Track A2:** potentiometer track no. 2 signal **Track A3:** - motor supply **Track A4:** Potentiometer track no. 1 signal **Track A5:** Potentiometer earth **Track A6:** + motor supply Motor resistance: between tracks A3 and A6: **1 to 15 Ω at 25˚C** Potentiometer resistance between tracks: A1 and A5: **875 to 1625 Ω at 25˚C**
Spark plugs	**NGK / PLFR5A**	Single electrode plugs
Ignition coils	**HANSIN / AIC-3102 22448 8J115 1322**	Transistorised single coil
Accelerator pedal potentiometer	**HELLA / JECS AEEE002**	Dual track potentiometer Resistance: - track 1: 2 (earth) and 4 (+5 V): **1.2 ± 0.5 kΩ** - track 2: 1 (earth) and 5 (+5 V): **1.7 ± 0.7 kΩ**
Air flowmeter	**UNISIA JECS**	Hot film air flowmeter with air temperature sensor Track allocation: **Track A1:** air flow signal **Track A2: 5 V** of reference **Track A3:** flowmeter earth and air temperature sensor **Track A4: + 12 V** after injection locking relay **Track A5:** air intake temperature sensor signal
Injectors	**HITACHI / JECS FBJC101**	Solenoid injector Resistance: **13.5 to 17.5 Ω at 20˚C**
Camshaft sensors	-	Hall effect sensors. They are located on the inlet camshafts. There is a sensor for each bank of cylinders. Resistance at **25˚C**: between tracks A1 and A2 A1 and A3 } except 0 or infinity A2 and A3

GETtheMANUALS.org

DESCRIPTION	MARQUE/TYPE	SPECIAL NOTES
Pinking sensor	**NGK / KNE20**	Piezoelectric type sensor It is located in the centre of the "V" Resistance at 20˚C: between tracks A1 and A2: **530 at 590 kΩ**
Atmospheric pressure sensor	**SIEMENS / 5WK9681**	It is located next to the computer
Power assisted steering pressure sensor	**TEXAS INSTRUMENTS**	-
Engine speed and position sensor	**-**	Hall effect sensors. It is located on the gearbox housing under the vehicle. Resistance at 25˚C: between tracks A1 and A2 A1 and A3 } except 0 or infinity A2 and A3
Camshaft dephaser solenoid valve	**UNISIA JECS**	Located on the inlet camshaft. Resistance at 20˚C: **7 at 7.5 Ω**
Variable inlet air flap solenoid valve	**MITSUBISHI**	Resistance: **32 Ω ± 5 %**
Upstream oxygen sensors	**NGK**	Heater resistance: between track A2 and A3: **3 to 4 Ω at 25˚C**
Downstream oxygen sensors	**NGK**	Heater resistance: between track A2 and A3: **3 to 4 Ω at 25˚C**
Canister bleed solenoid valve	**UNISIA JECS**	Resistance: **24 Ω ± 5 %**
Catalytic converter	**ECIA**	**C204**
Catalytic preconverter	**ECIA**	**C202** and **C203**
Firing order	**-**	**1 - 2 - 3 - 4 - 5 - 6** no.1 and 2 on timing side (no.1 on rear bank)
Fault finding	**Diagnostic tools (except XR25)**	

GETtheMANUALS.org

AIR INTAKE CIRCUIT DIAGRAM

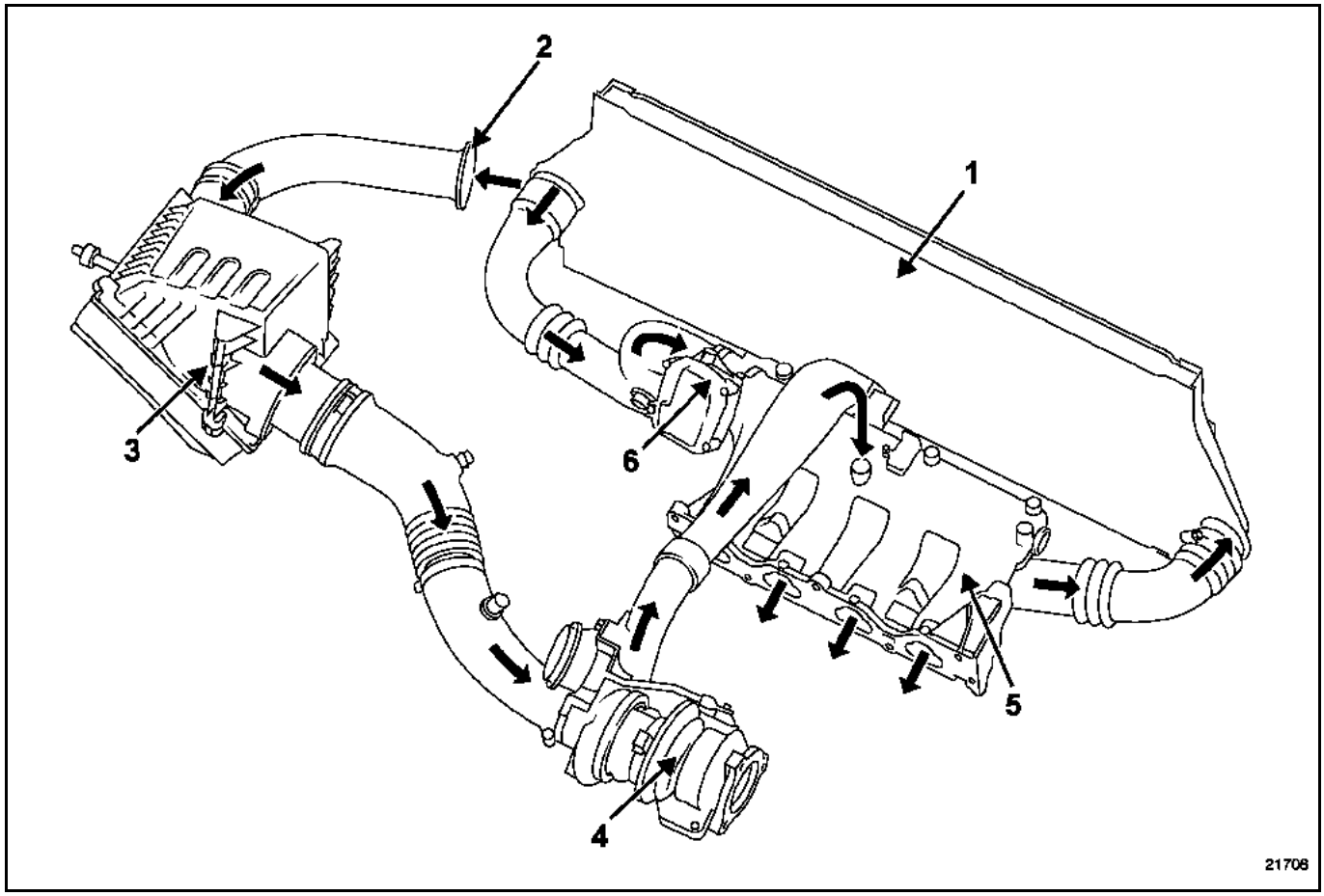

1 Air-to-air intercooler
2 Air inlet
3 Air filter
4 Turbocharger
5 Plenum chamber
6 Motorised throttle body

GETtheMANUALS.org

AIR INTAKE CIRCUIT DIAGRAM

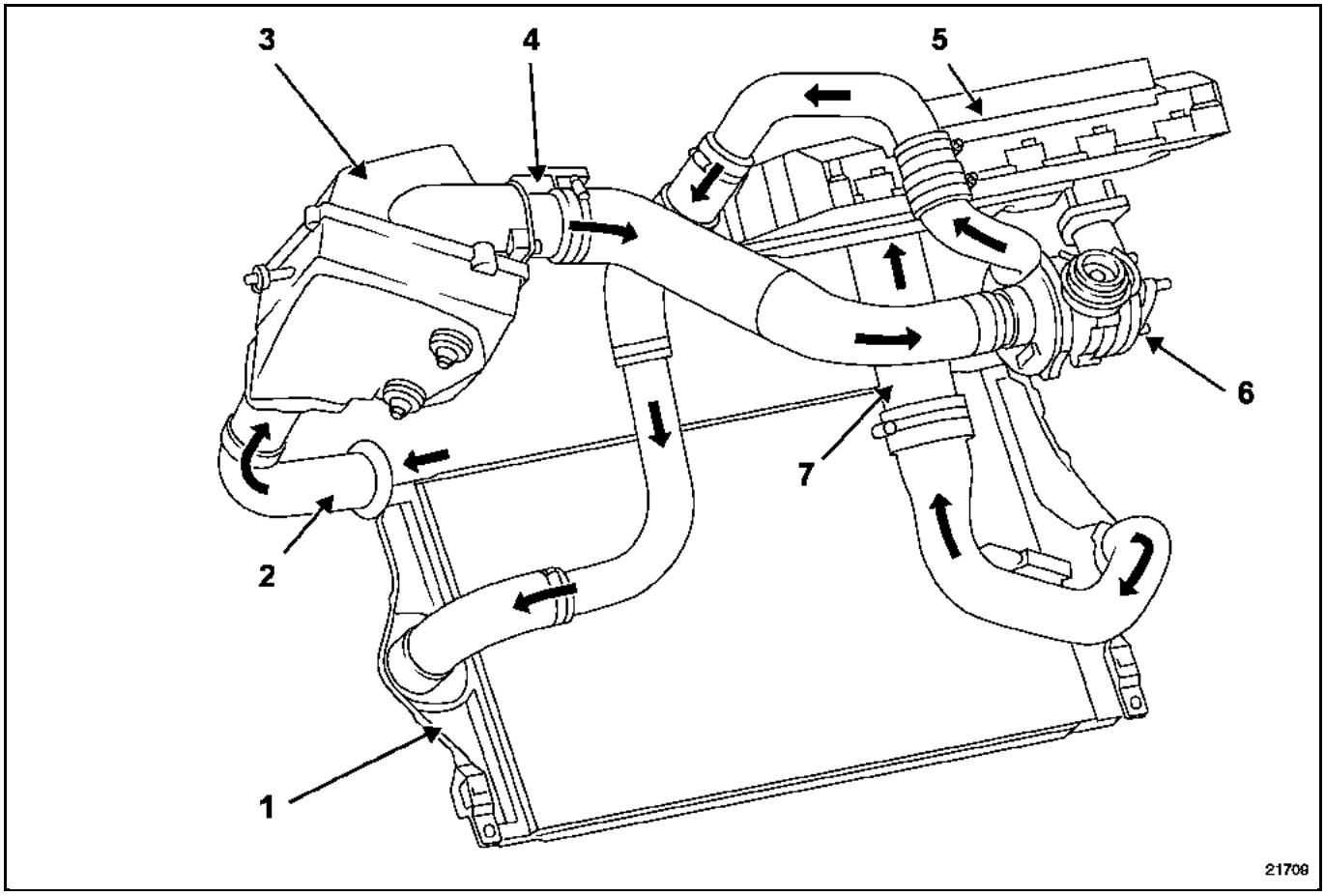

1 Air-to-air intercooler
2 Air inlet
3 Air filter
4 Flowmeter
5 Plenum chamber
6 Turbocharger
7 Air vent unit

GETtheMANUALS.org

AIR INTAKE CIRCUIT (diagram)

The air intake circuit is fitted with an assembly of resonators (2) intended to reduce inlet noise and optimise filling at low speed.

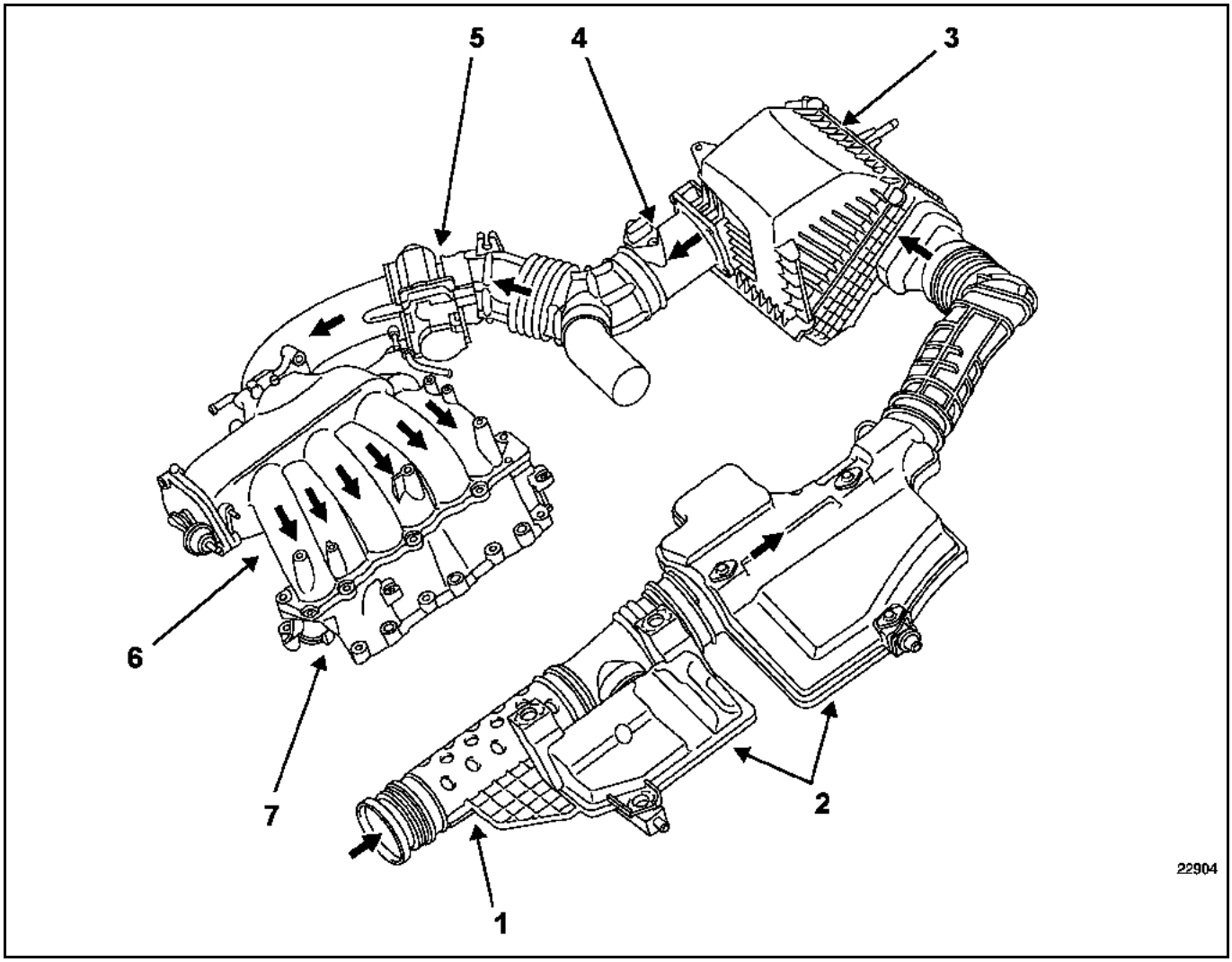

1 Inlet duct
2 Resonator assembly
3 Air filter unit
4 Air flowmeter
5 Motorised throttle body
6 Inlet plenum with variable inlet flap
7 Inlet manifold

GETtheMANUALS.org

AIR INTAKE CIRCUIT DIAGRAM

The air intake circuit includes an air resonator (7) capable of absorbing certain pressure waves and reducing noise.

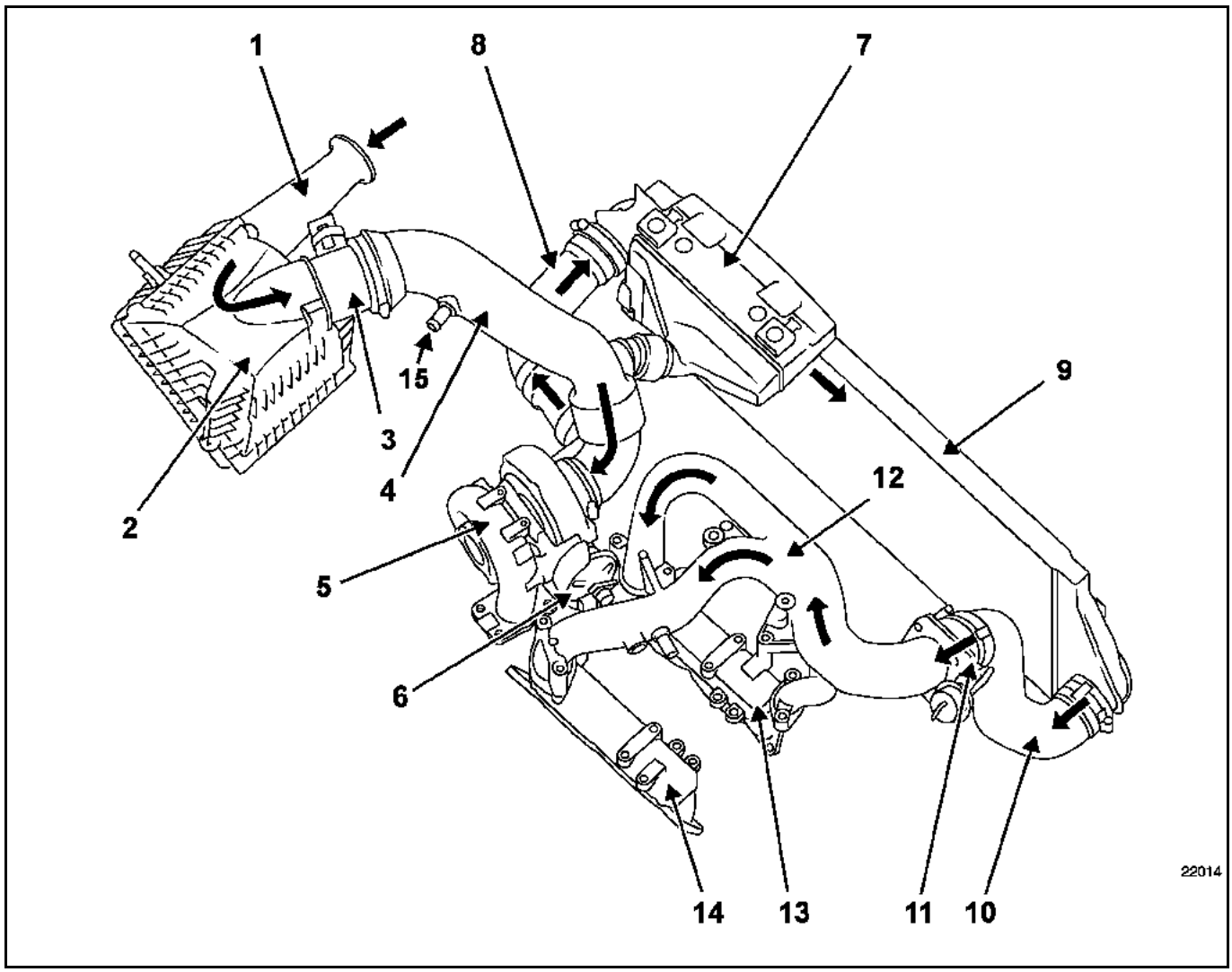

1 Air inlet duct
2 Air filter unit
3 Air flowmeter
4 Air inlet duct
5 Turbocharger
6 Wastegate
7 Air resonator
8 Exchanger outlet inlet tract
9 Air-to-air intercooler
10 Exchanger outlet inlet tract
11 Damping unit
12 Inlet manifold
13 Front inlet plenum chamber.
14 Rear inlet plenum chamber
15 Take-off pipe for the oil vapour rebreathing pipe

GETtheMANUALS.org

FILTER ELEMENT

Turbocharged F4R engine

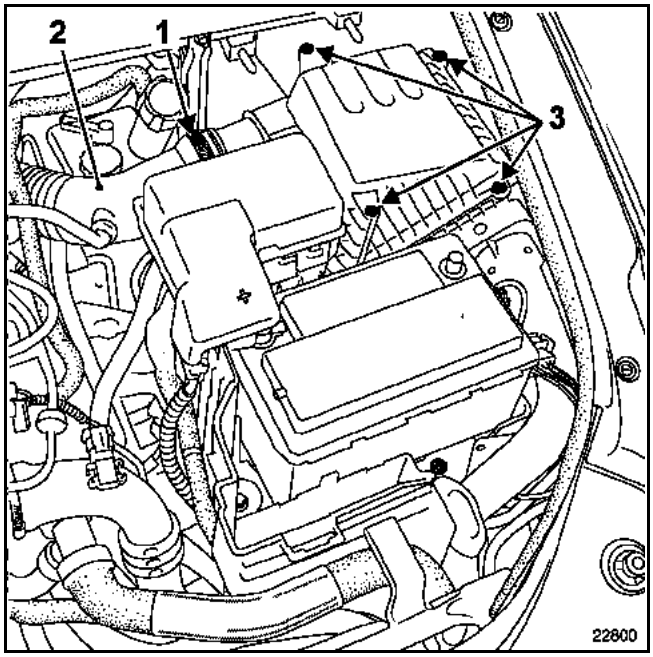

Unscrew the clamp (1) then remove the air hoses (2).

Remove the four mounting bolts (3) on the air filter cover to gain access to the filter element.

G9T engine

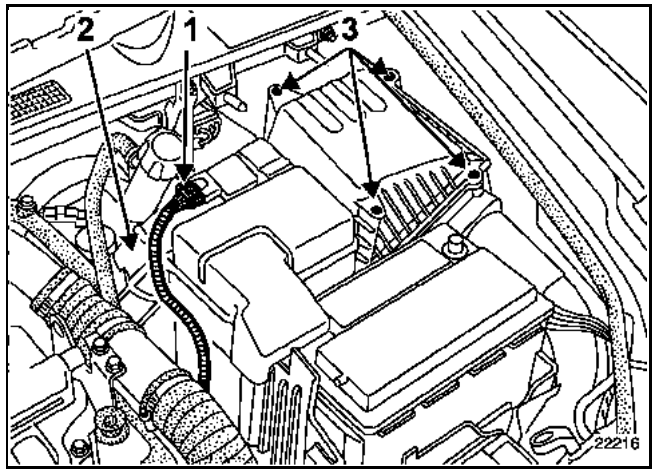

Disconnect the connector (1) from the air flowmeter.

Unscrew then remove the air hoses (2).

Remove the four mounting bolts (3) on the air filter cover to gain access to the filter element.

GETtheMANUALS.org

FILTER ELEMENT

Remove the engine covers.

Disconnect:
– the battery,
– the air flowmeter connector (1),
– the air intake duct (2).

Unclip the relay unit mountings (3) then gently release it on the side.

Remove the four mounting bolts (4) from the air filter unit cover.

Release the air filter unit cover with the flowmeter then remove the filter element.

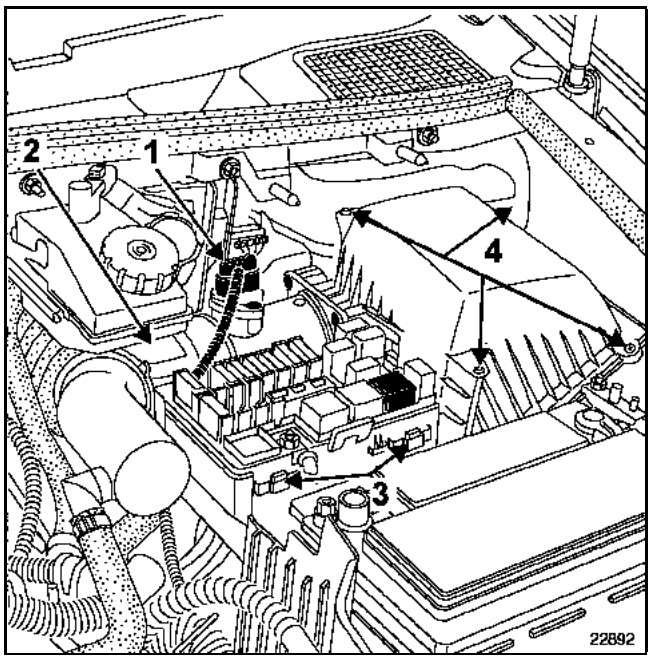

GETtheMANUALS.org

FILTER ELEMENT

Remove the engine covers.

Disconnect:
– the battery,
– the air flowmeter connector (1).

Disconnect the oil vapour rebreathing duct (2).

Remove the air inlet duct (3) complete with the flowmeter.

To do this, remove the two mounting bolts on the air flowmeter, attach it to the air resonator then the turbocharger.

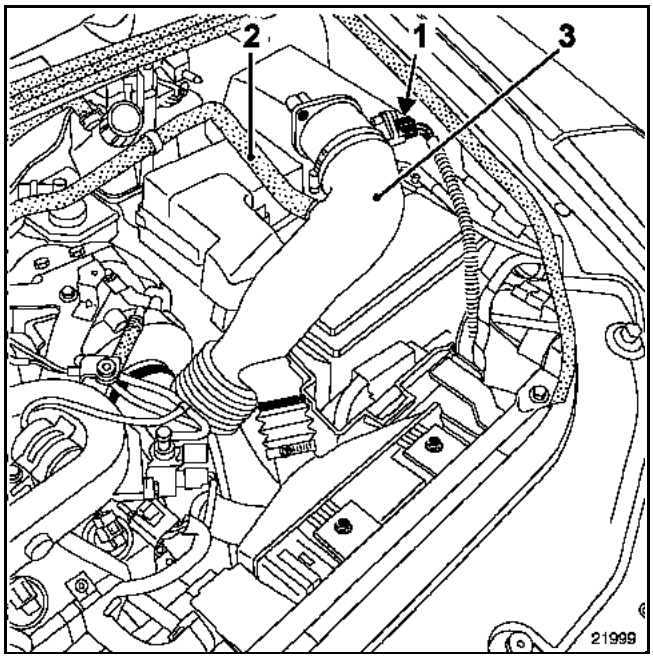

Unclip the relay unit mountings (4) then gently release it on the side.

Remove the four mounting bolts (5) from the air filter unit cover.

Release the air filter unit cover then remove the filter element.

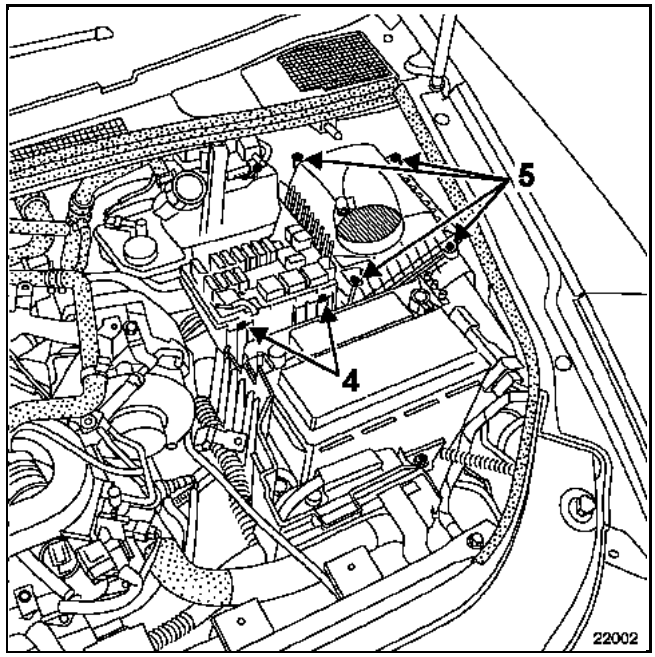

GETtheMANUALS.org

TIGHTENING TORQUE (in daNm)	
Throttle body bolt	1.5

REMOVAL

Disconnect the battery.

Loosen the clamp (1).

Disconnect:
– the connector from the turbocharger pressure sensor (2),
– the connector from the air temperature sensor (3),

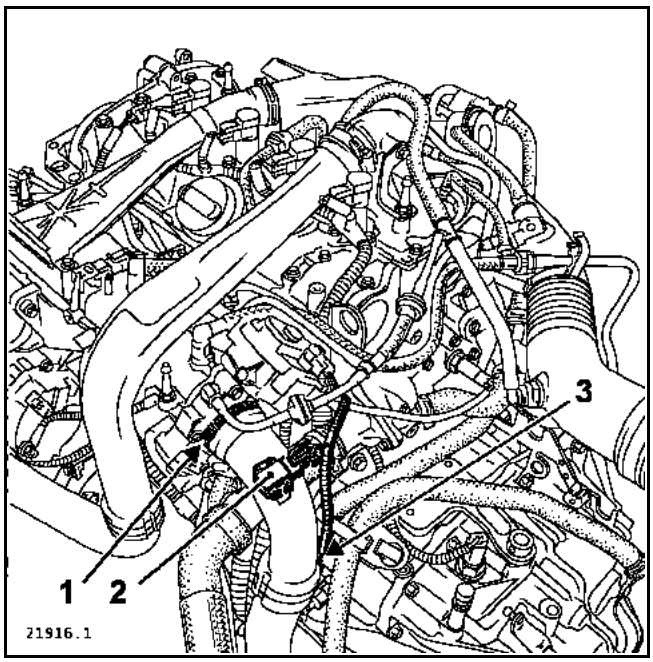

– the motorised throttle body connector (4).

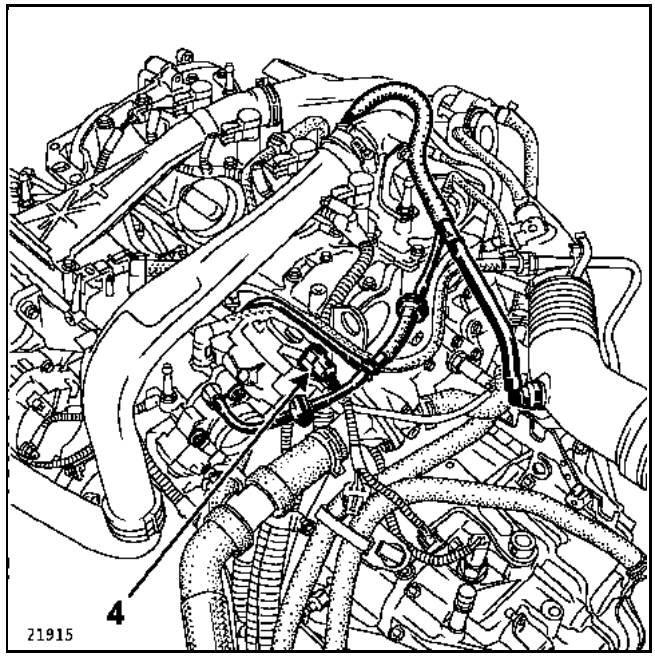

Remove the air exchanger/manifold pipe.

Remove the throttle body's three mounting bolts (5).

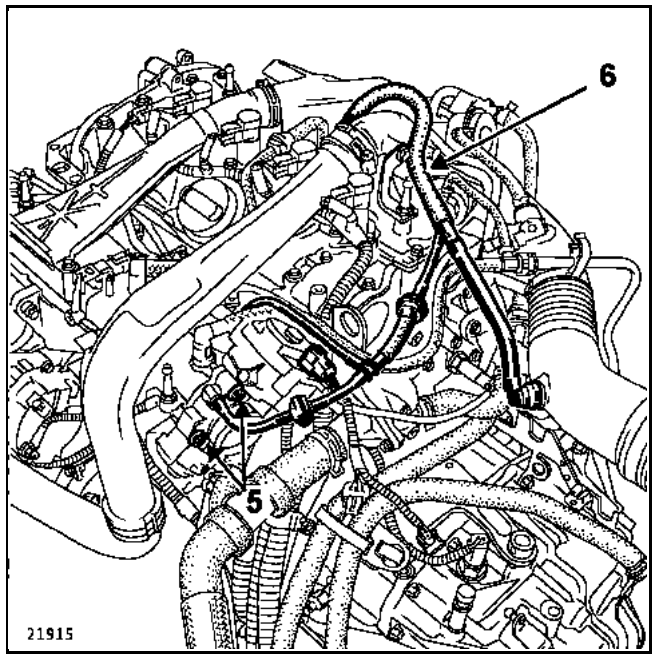

Remove the throttle body with the petrol and oil vapour rebreather pipe (6).

Unclip the pipe (6) from the throttle body.

GETtheMANUALS.org

REFITTING

Proceed in the reverse order to removal.

Replace the gasket every time the throttle valve is removed.

Using the diagnostic tool, program the throttle body.

Each time the ignition is switched on, the throttle unit should go through a cycle of programming for its minimum and maximum positions.

GETtheMANUALS.org

TIGHTENING TORQUES (in daNm)	
Throttle body bolt	0.8 ± 0.1
Air filter unit bolt	1

REMOVAL

Disconnect the battery.

Remove the air filter unit cover (see Section **12A: Fuel mixture Air filter**).

Remove the air inlet duct.

Disconnect the motorised throttle body connector (1).

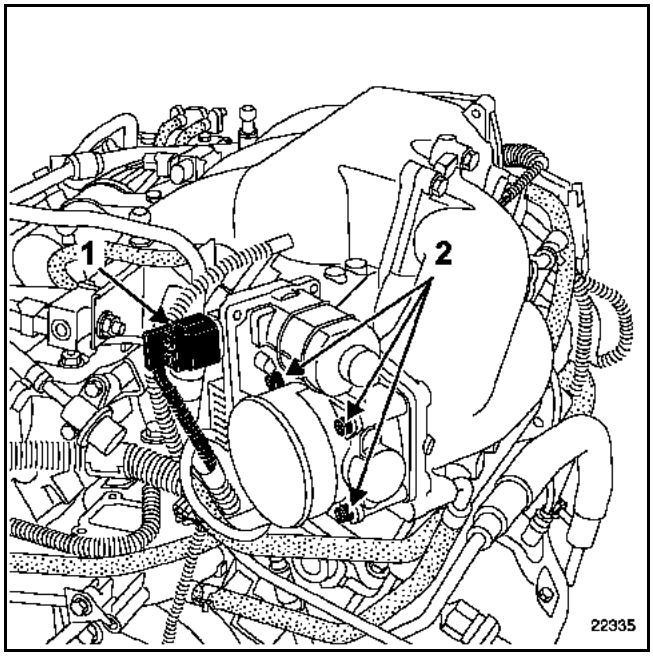

Remove the throttle body's four mounting bolts (2).

REFITTING

Proceed in the reverse order to removal.

Replace the gasket every time the throttle valve is removed. Use grease to refit it more easily.

When the ignition is switched on, the throttle unit should go through a cycle of programming for its minimum and maximum positions.

Use the diagnostic tool to check that the programming has been carried out correctly.

GETtheMANUALS.org

IMPORTANT:
The motorised throttle body cannot be repaired. Modification of the position of stop screw (A) is forbidden.

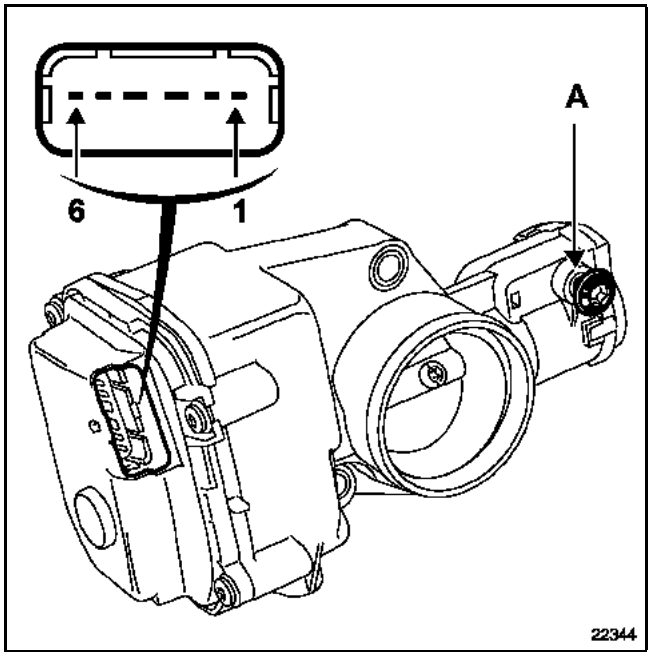

ALLOCATION OF THROTTLE VALVE CONNECTOR TRACKS

Track	Description
1	Potentiometer earth
2	Potentiometer no. 1 signal
3	- motor
4	+ motor
5	Potentiometer **+ 5 V** supply
6	Potentiometer no. 2 signal

Motor resistance between tracks 3 and 4:
1.6 Ω ± 0.3 Ω

Potentiometer resistance between tracks 1 and 5:
1500 Ω ± 300 Ω

GETtheMANUALS.org

IMPORTANT:
The motorised throttle body cannot be repaired.

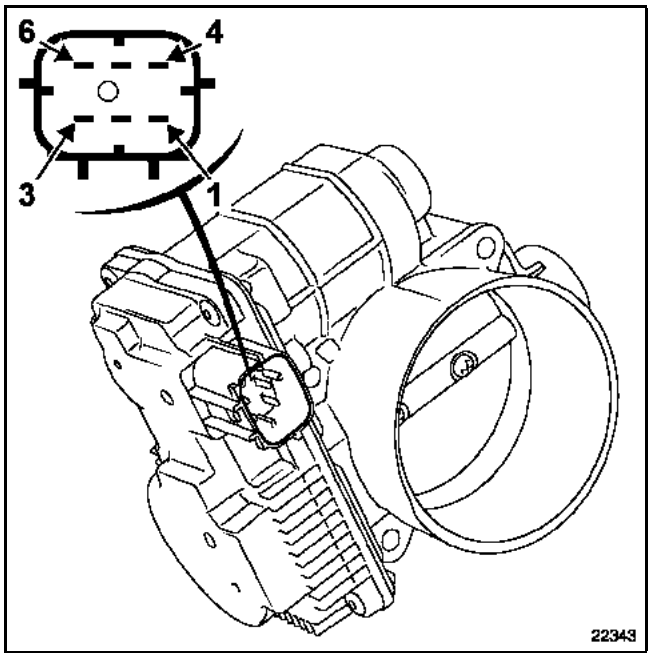

ALLOCATION OF THROTTLE VALVE CONNECTOR TRACKS

Track	Description
A1	**+ 5 V** supply
A2	Potentiometer signal track no. 2
A3	Motor supply
A4	Potentiometer signal track no. 1
A5	Potentiometer earth
A6	Motor supply

Motor resistance: between tracks A3 and A6: **1 to 15 Ω at 25°C**

Potentiometer resistance: between tracks A1 and A5: **875 to 1625 Ω at 25 °C**

GETtheMANUALS.org

TIGHTENING TORQUES (in daNm)	
Exhaust gas recirculation pipe mounting bolt	2.5 ± 0.5
Air vent unit mounting bolt	2.2 ± 0.4

AIR VENT UNIT

This unit is located between the air-to-air intercooler and the plenum chamber. It includes the exhaust gas recirculation electric valve and the engine stop system.

REMOVAL

Disconnect the battery.

Remove the exhaust gas recirculation pipe (1) and the seals. Plan for the replacement of the pipe and the seals when refitting.

Remove the air exchanger/air vent unit pipe (2), by loosening the clamp (3).

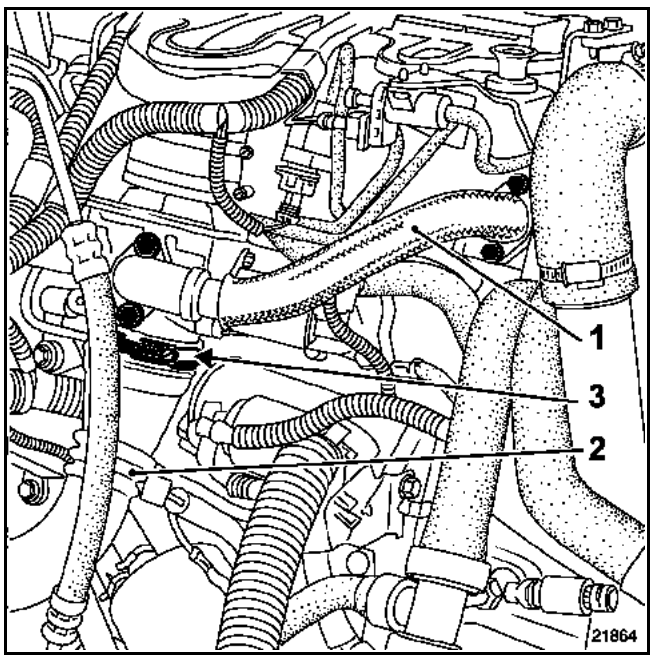

Disconnect the exhaust gas recirculation control solenoid valve connector (4).

Loosen the clips from the connection pipe (5) with the inlet manifold.

Remove:
- the stiffening bracket (6) between the air vent unit and the power assisted steering pump,
- the three mounting bolts (7) from the air vent unit,
- the air vent unit with the exhaust gas recirculation electric valve.

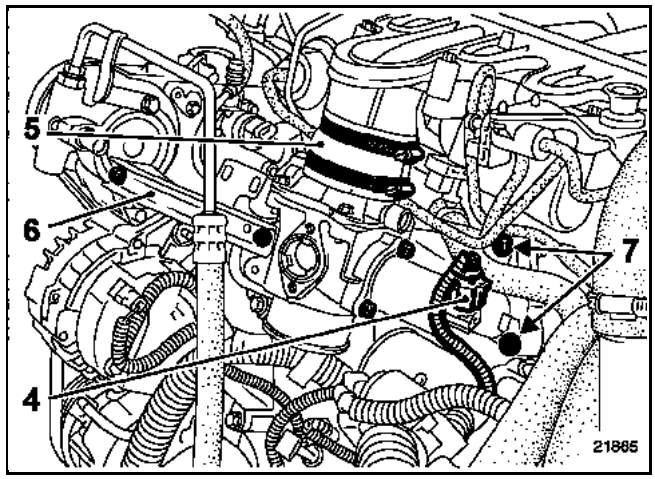

REFITTING

Proceed in the reverse order to removal. Observe the tightening torques.

GETtheMANUALS.org

TIGHTENING TORQUE (in daNm)	
Damper flap mounting bolt	1.2

OBJECTIVE

The aim of the system is to stop the engine quickly after the ignition is switched off.

DESCRIPTION

The system consists of:
– a diaphragm (1) activating the damper flap,
– a damper flap (2),

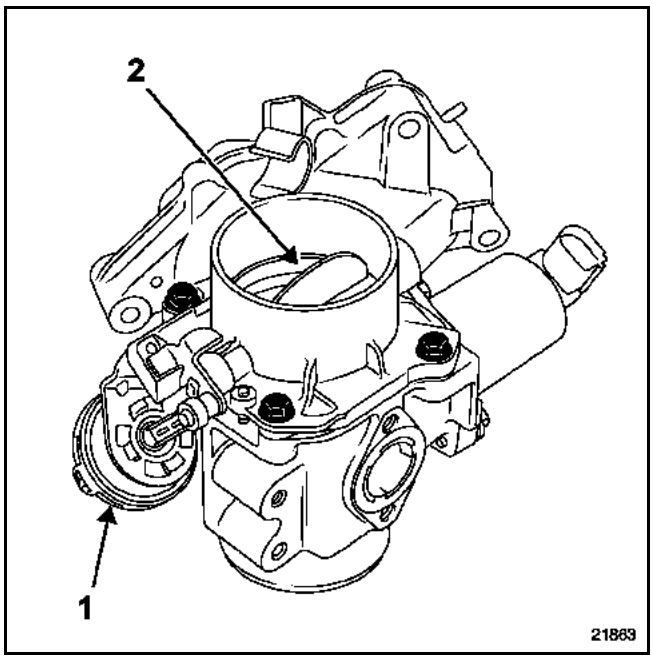

– a vacuum canister (3),

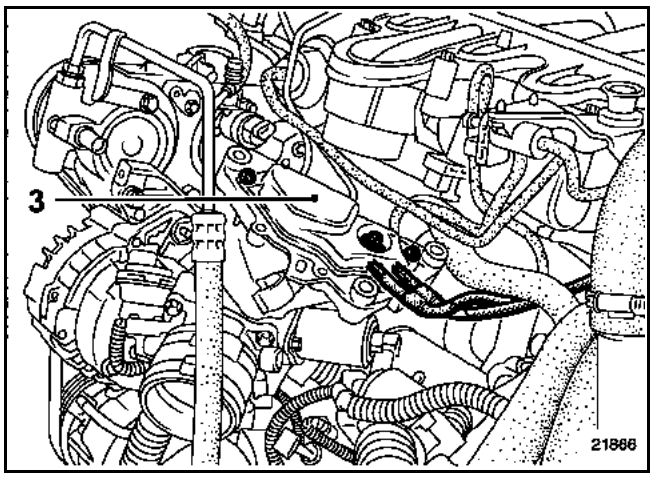

– a solenoid valve (4).

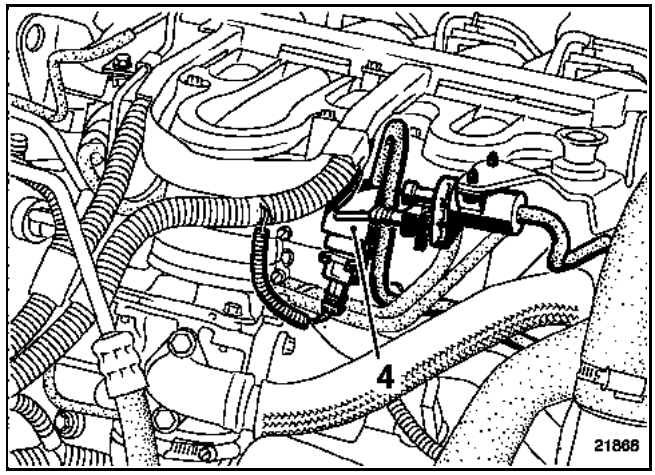

OPERATION

When the ignition is switched off, the solenoid valve connects the vacuum canister with the damper flap control diaphragm.

The latter is subject to the vacuum which results in the air intake valve being closed.

The engine can no longer breathe air and stops immediately.

GETtheMANUALS.org

DIAGRAM

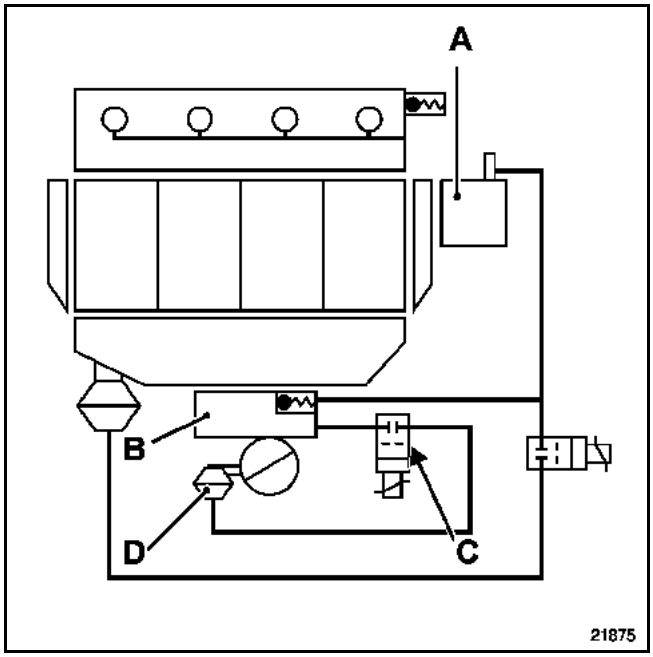

A Vacuum pump
B Vacuum canister fitted with an anti-return valve
C Engine stop solenoid valve
D Damper flap control diaphragm

REMOVING THE DAMPER FLAP

The air vent unit must be removed to allow removal of the damper flap (see Section **12A Fuel mixture Air vent unit**).

Remove the four bolts from the (1) damping flap then remove the throttle - diaphragm assembly.

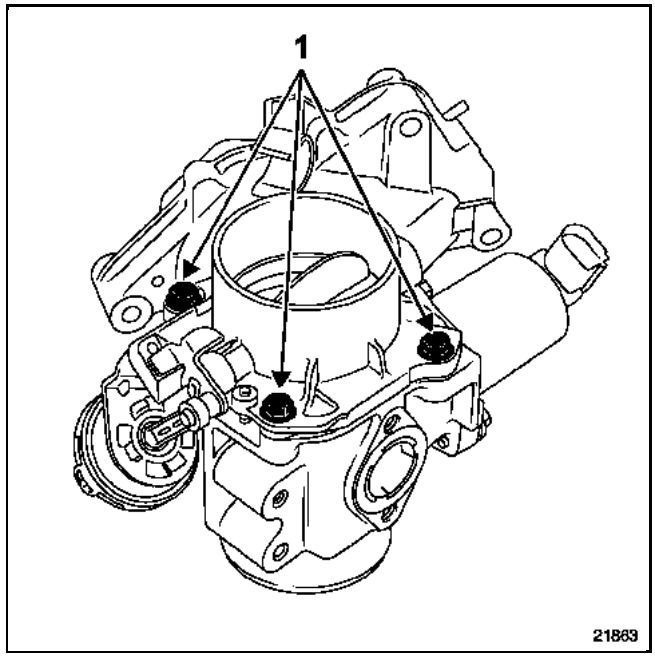

REFITTING

Proceed in the reverse order to removal.

GETtheMANUALS.org

OBJECTIVE

The aim of the system is to stop the engine smoothly without jerking after the ignition is switched off.

DESCRIPTION

The system consists of:
– a diaphragm (1) activating the throttle,
– a damper flap (2),
– a control solenoid valve (3),
– a vacuum canister (4).

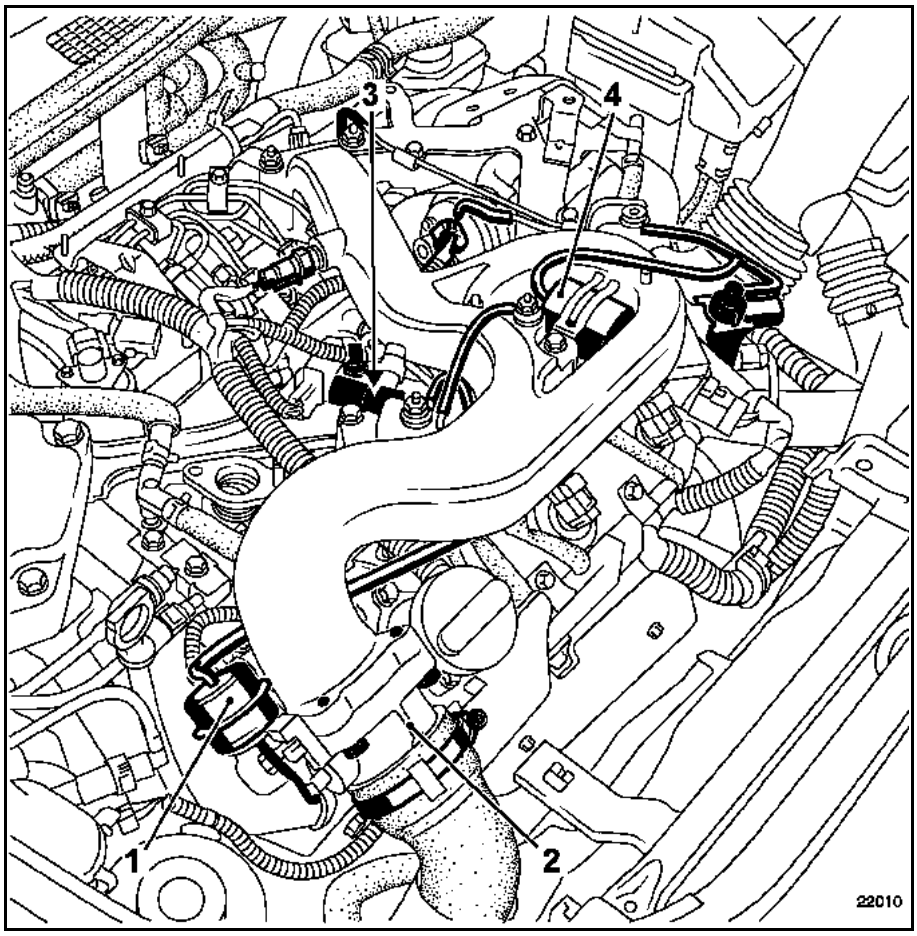

OPERATION

When the ignition is switched off, the solenoid valve connects the vacuum canister with the diaphragm.

The latter is subject to the vacuum which results in the air intake valve being closed.

The engine can no longer breathe air and stops immediately.

GETtheMANUALS.org

TIGHTENING TORQUE (in daNm)	
Damper mountings	**0.8**

REMOVING THE DAMPER

Disconnect:
– the air inlet tract (1),
– the vacuum pipe on the diaphragm (2).

Remove:
– the four mounting bolts (3),
– the flap-diaphragm assembly.

REFITTING THE DAMPER

Replace the gasket.

Proceed in the reverse order to removal.

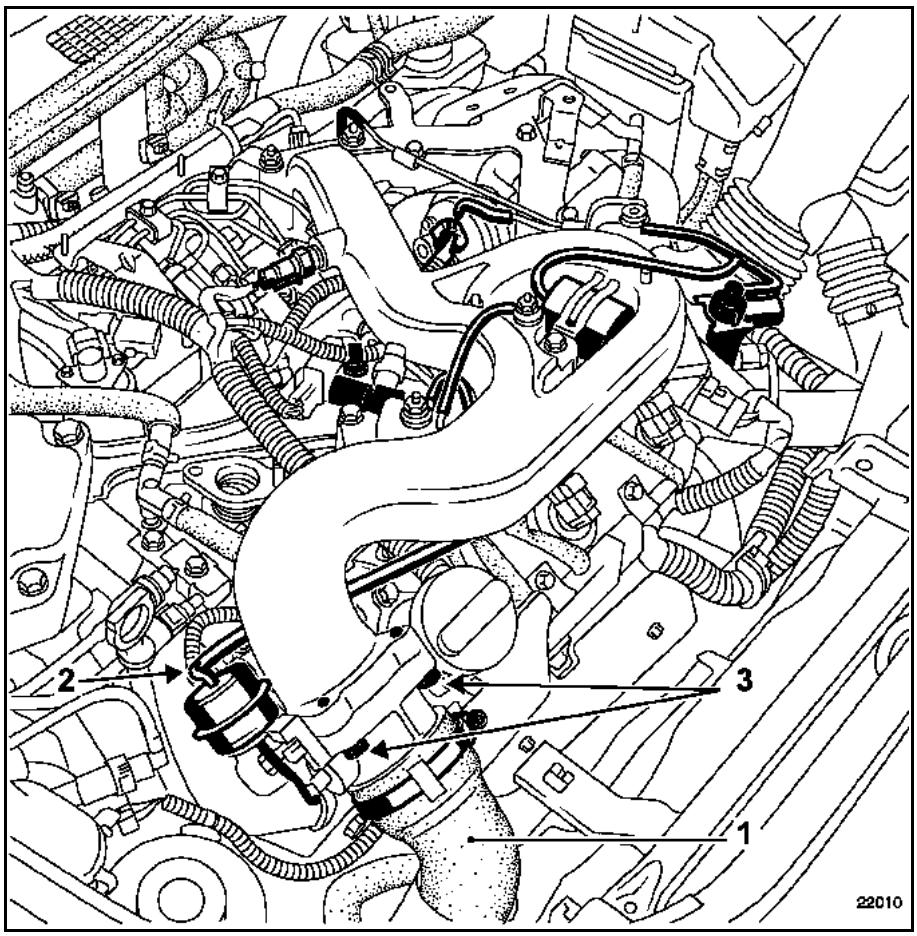

GETtheMANUALS.org

TIGHTENING TORQUES (in daNm)	
Plenum chamber bolt	2.1
Throttle body bolt	1
Injector rail bolt	0.8
Air exchanger/turbocharger pipe bolt	1
Air exchanger/turbocharger pipe clamp	0.5

REMOVAL

Disconnect:
– the battery,
– the motorised throttle body connector (1),
– the air exchanger/throttle body pipe (2),
– the connector from the turbocharger pressure sensor (3),
– the connector from the air temperature sensor (4).

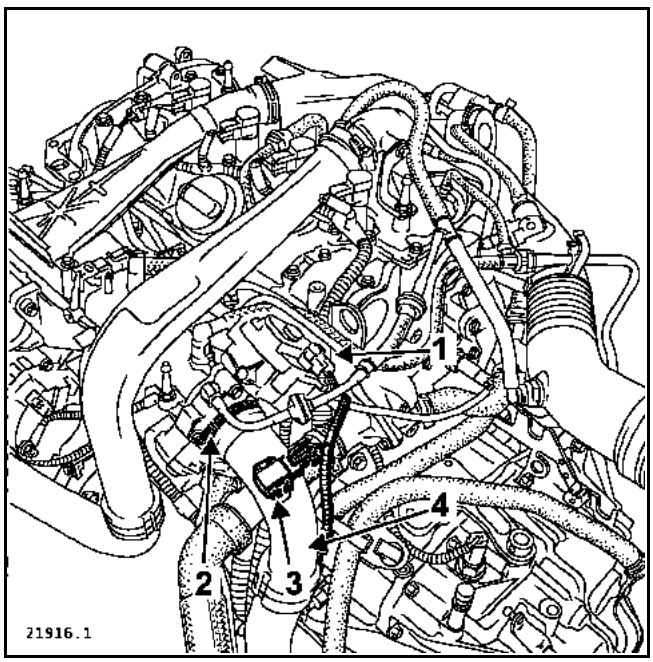

Remove:
– the throttle body's three mounting bolts (5),
– the throttle body with the petrol and oil vapour rebreather pipe,

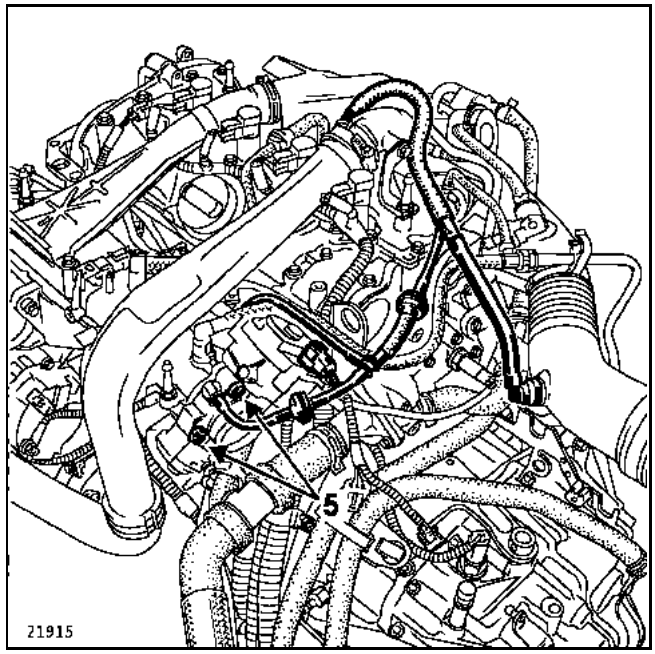

– the turbocharger heat shield air duct (6),
– the clamp and the mounting bolt from the air hoses on the exchanger/turbocharger (7).

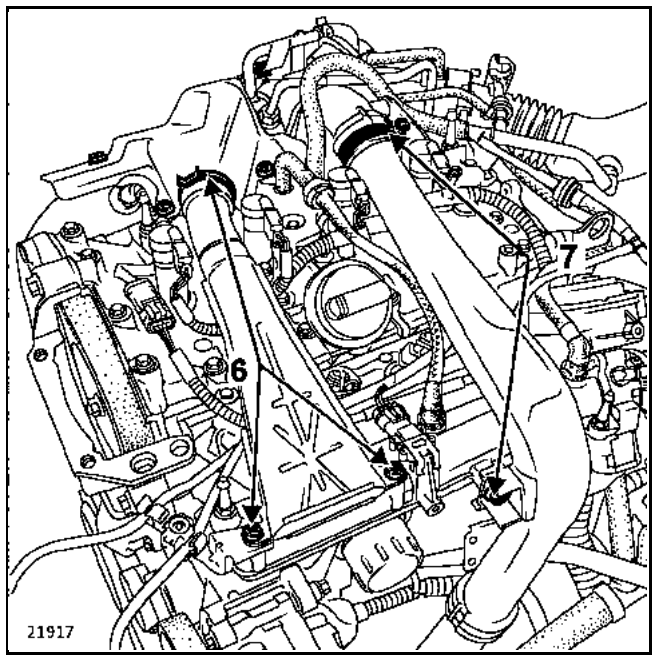

GETtheMANUALS.org

Disconnect:
– the oil vapour rebreathing pipe from the inlet plenum chamber (8),
– the vacuum pipe from the brake servo (9),
– the pressure sensor connector on the plenum chamber (10),
– the connectors from the injectors (11).

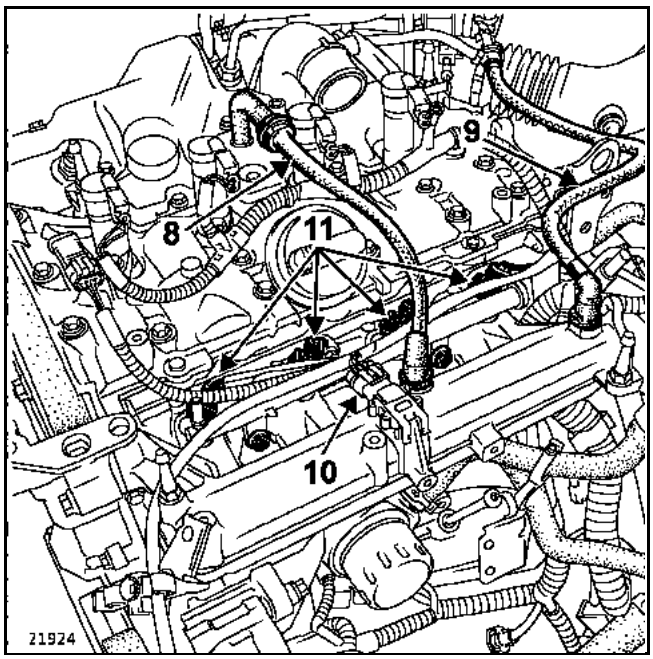

Remove:
– the two injection rail bolts (12),
– the injector rail,

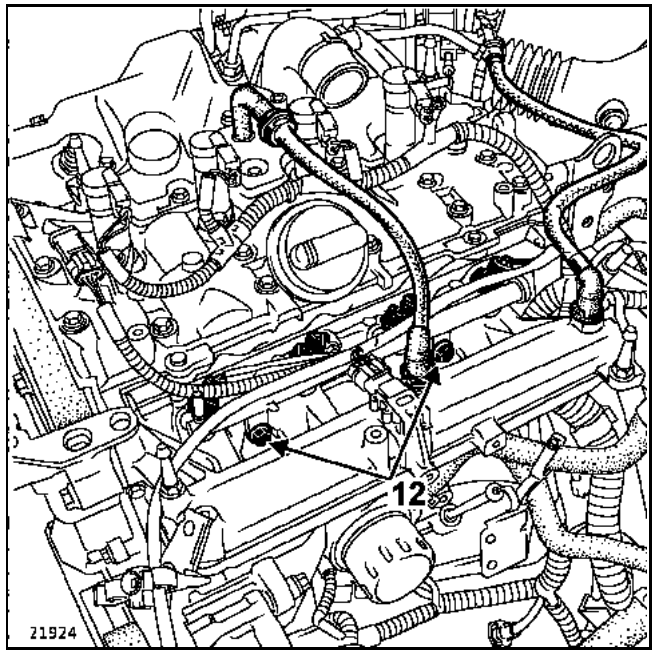

– the eight mounting bolts on the inlet plenum chamber (13),
– the inlet plenum chamber.

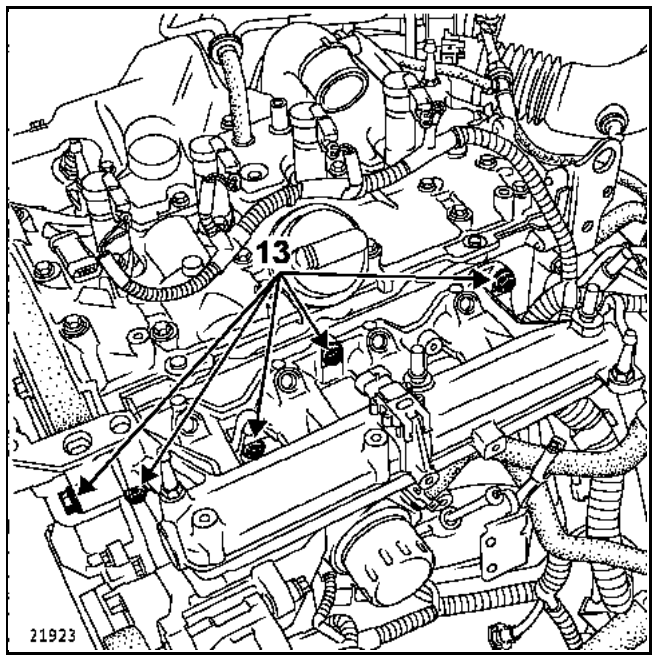

GETtheMANUALS.org

REFITTING

Replace the gaskets on the inlet plenum chamber and the throttle body.

Tighten the plenum chamber bolts.

Observe the order (1-2-3-4-5-6-7-8) and tightening torque for the plenum chamber mounting bolts.

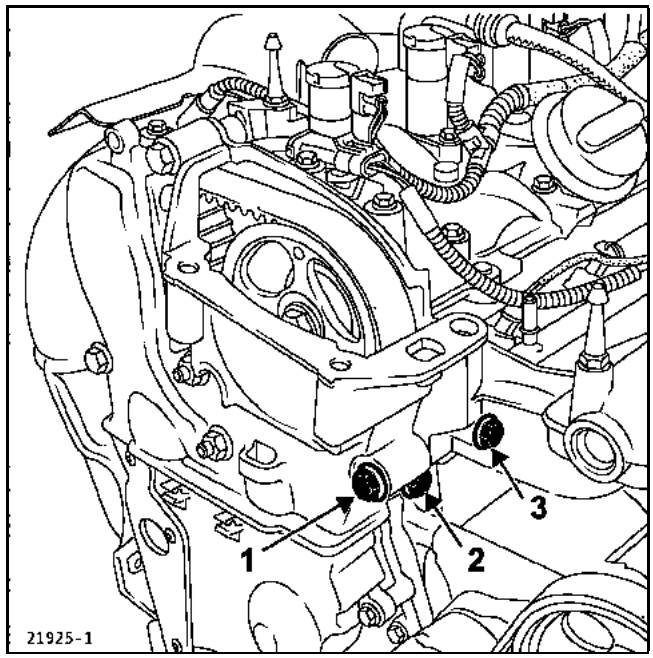

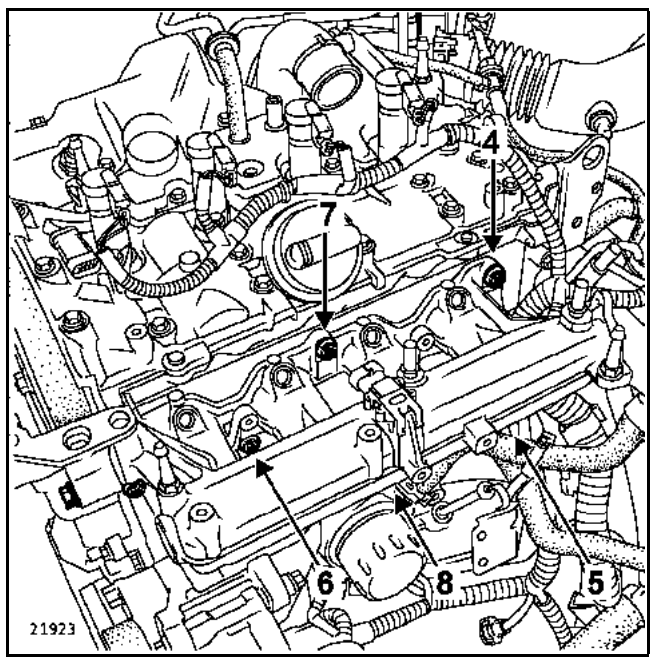

Proceed in the reverse order to removal.

GETtheMANUALS.org

SPECIAL FEATURE:

The inlet plenum chamber is fitted with a variable air intake flap.

Downstream of the flowmeter, the inlet plenum chamber divides in two, each side supplying one bank of cylinders. An air flap allows the two banks of cylinders either to be isolated or to be in communication. This system is designed to optimise engine torque.

The injection computer controls a solenoid valve (1), which connects the inlet plenum chamber vacuum via a vacuum canister (2), with the control diaphragm (3) of the air flap (4).

OPERATING CONDITIONS

The solenoid valve is not controlled at rest, the air flap is open.

1. At idle speed or full load, the air flap is **open**.

2. The solenoid valve is controlled, the air flap **closes**, under the following conditions:
– outside the starter motor run-up phase,
– throttle position potentiometer **outside the no load position**,
– coolant temperature **≥ to -49 °C**,
– engine speed between **1600 and 3600 ± 200 rpm**,
– injection timing **> 0.5 milliseconds**.

REMOVAL - REFITTING

Removing and refitting the air flap does not entail particular difficulties.

Replace the gaskets with new ones.

Tighten the flap mounting bolts to a torque of **1.9 ± 0.2 daNm**

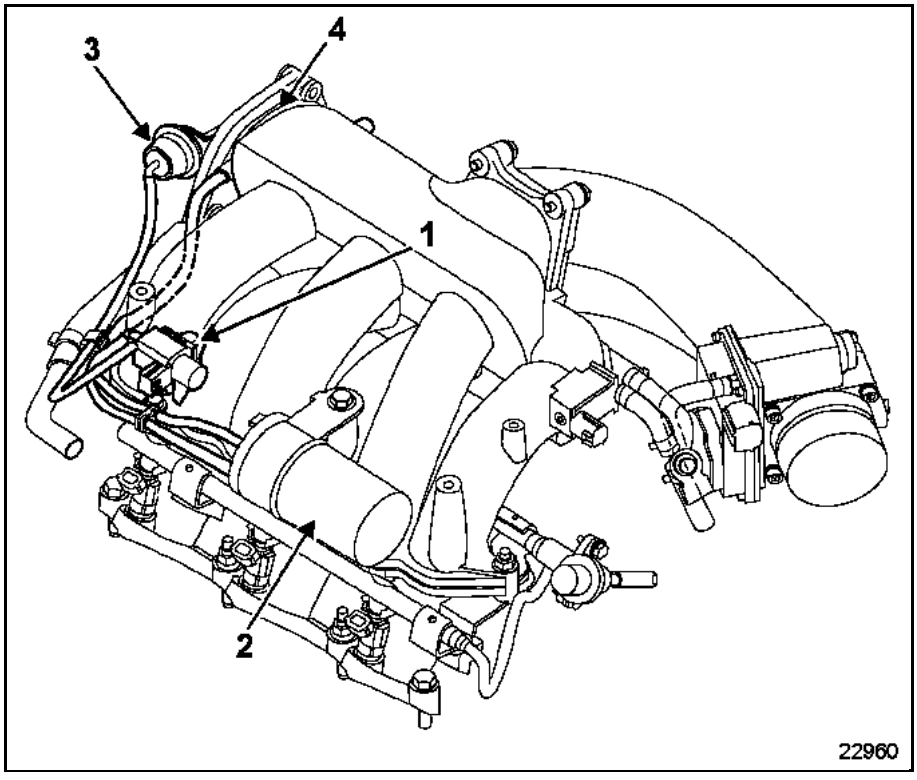

GETtheMANUALS.org

TIGHTENING TORQUE (in daNm)	
Plenum chamber nuts and bolts	2.2
Engine tie-bar:	
sub-frame side	10.5
engine side	18

REMOVAL

Disconnect the battery.

Remove:
– the vacuum canister (1),
– the air intake flap control solenoid valve (2),
– the vacuum pipe (3) for the brake servo.

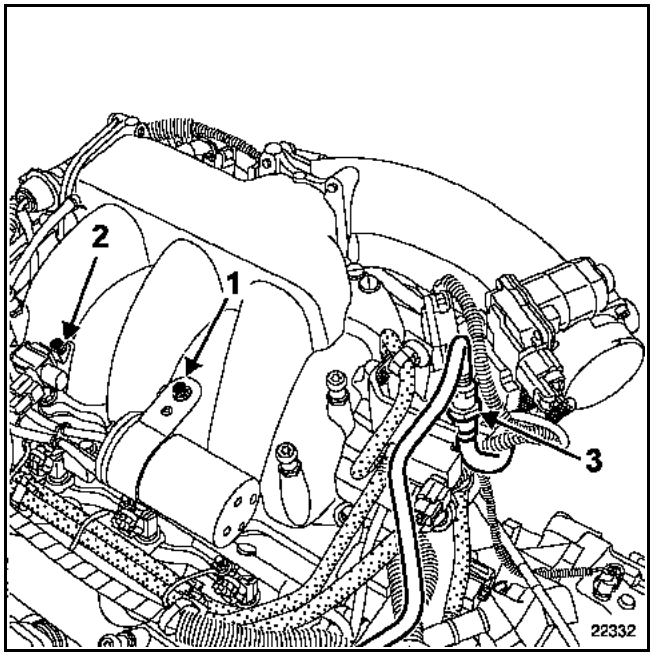

Disconnect:
– the pipes on the control diaphragm (4),
– the pipe (5) on the plenum chamber,
– the fuel vapour control absorber solenoid valve

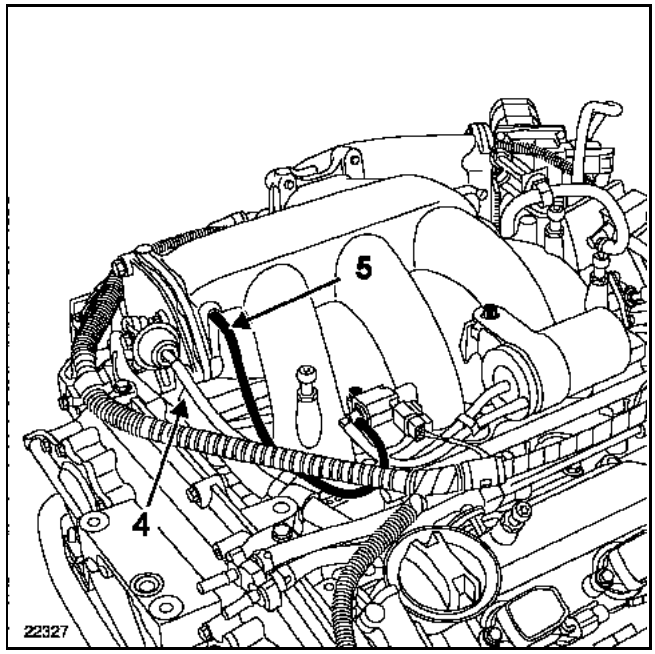

– the oxygen sensor connectors (6).

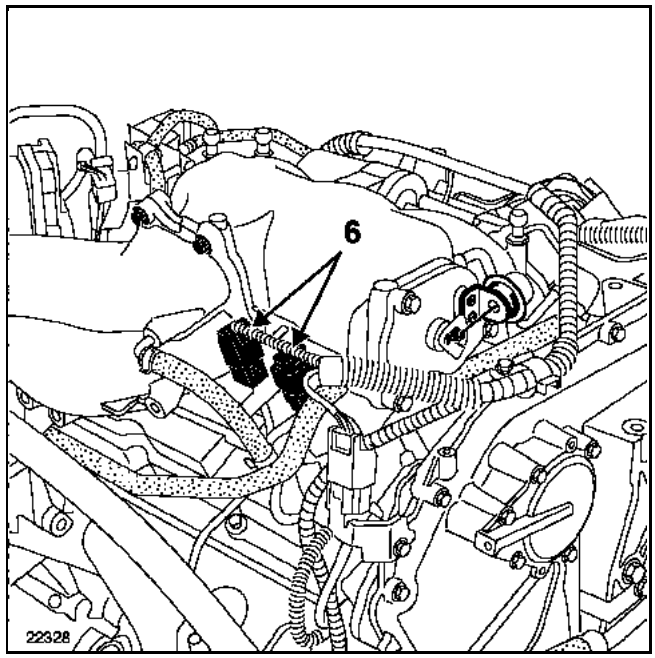

Fit the hose clips on the plenum chamber heater hoses.

Disconnect the two hoses.

GETtheMANUALS.org

Fit the lower engine support **Mot. 1367-02**.

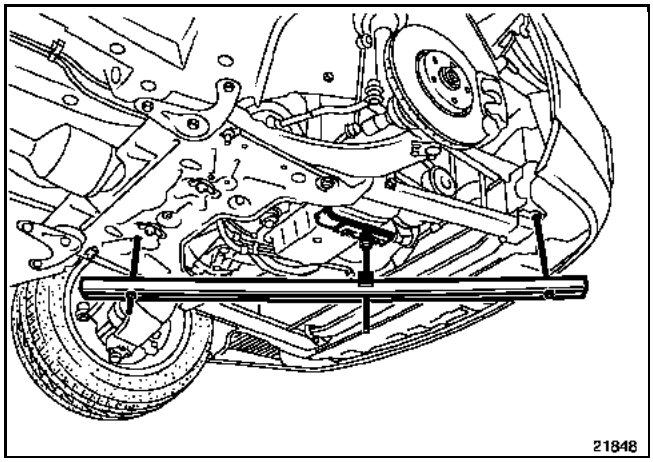

Remove:
– the torque reaction arm,

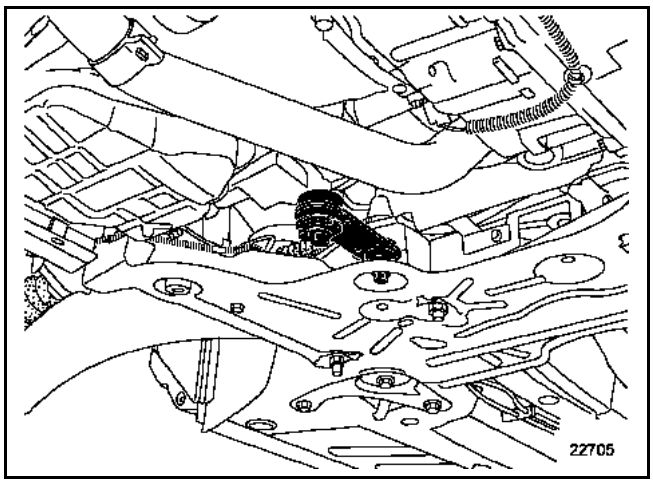

– the suspended mounting on the timing end,
– the inlet plenum chamber nuts and bolts (7),
– the plenum chamber.

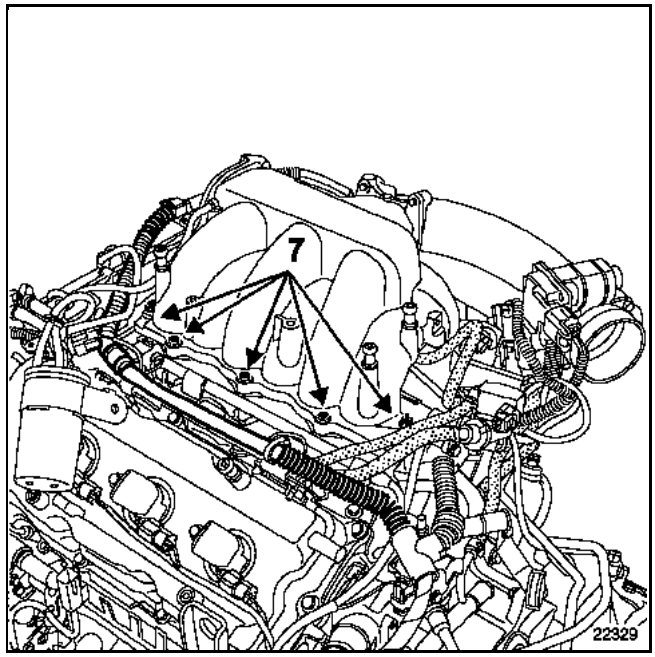

REFITTING

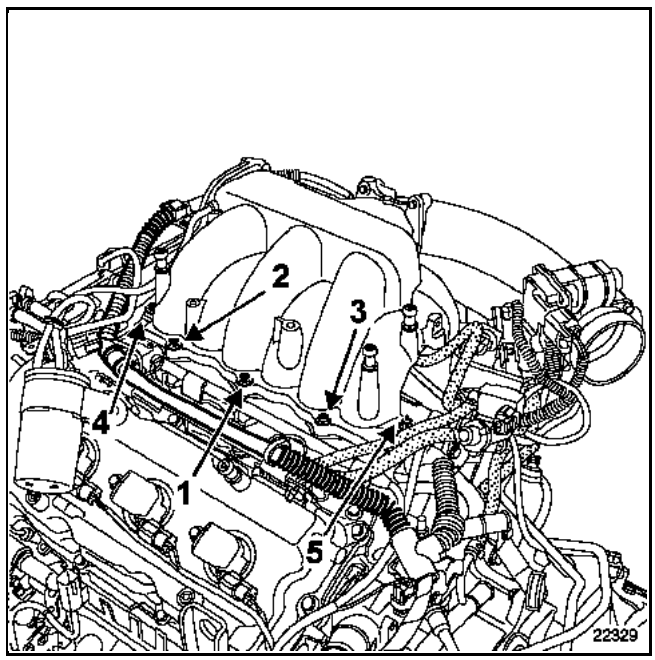

Replace the gasket with a new one

NOTE:
Observe the tightening torques and sequence for the mountings on the plenum chamber.

The rest of the operations should be performed in the reverse order to removal.

Top up the cooling circuit.

GETtheMANUALS.org

TIGHTENING TORQUES (in daNm)		
Plenum chamber nuts and bolts		**2.2**
Injector rail bolts:	**- pre-tightening**	**1**
	- tightening	**2.3**
Manifold nuts and bolts		**1.2**

REMOVAL

Disconnect the battery.

Remove the plenum chamber inlet (see **Plenum chamber** operation).

Disconnect the fuel inlet union (1) on the injector rail.
Be aware that these contain a quantity of fuel.

Remove:
– the mounting bolts (2) from the injector rail,
– the injector rail,

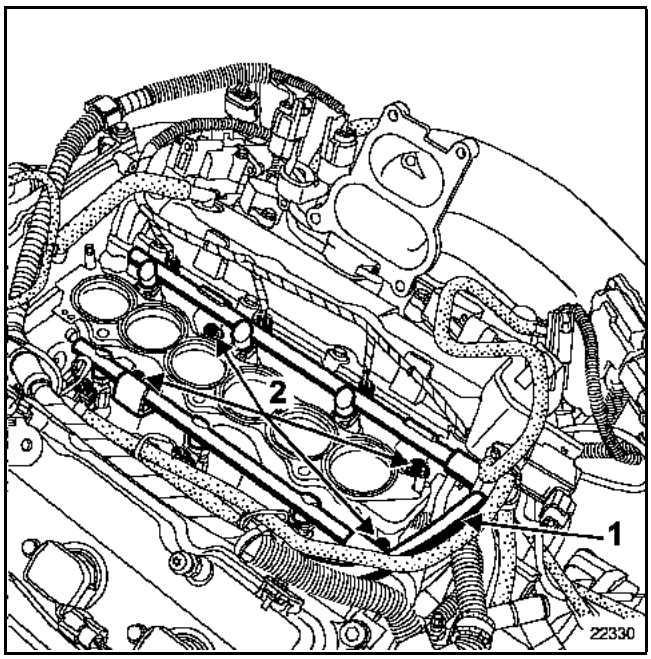

GETtheMANUALS.org

– the inlet manifold mounting nuts and bolts,
– the inlet manifold.

REFITTING

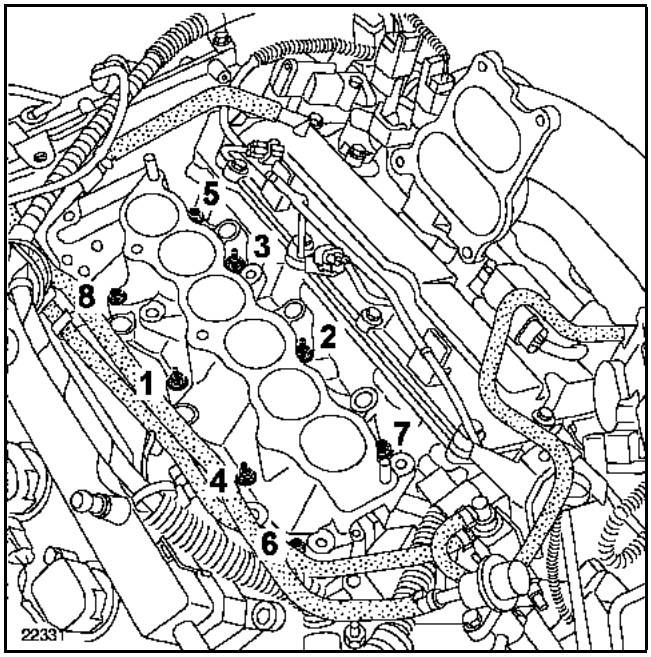

Replace the gasket with a new one

NOTE:
Observe the tightening torque and the tightening order of the inlet manifold.

The rest of the operations should be performed in the reverse order to removal.

GETtheMANUALS.org

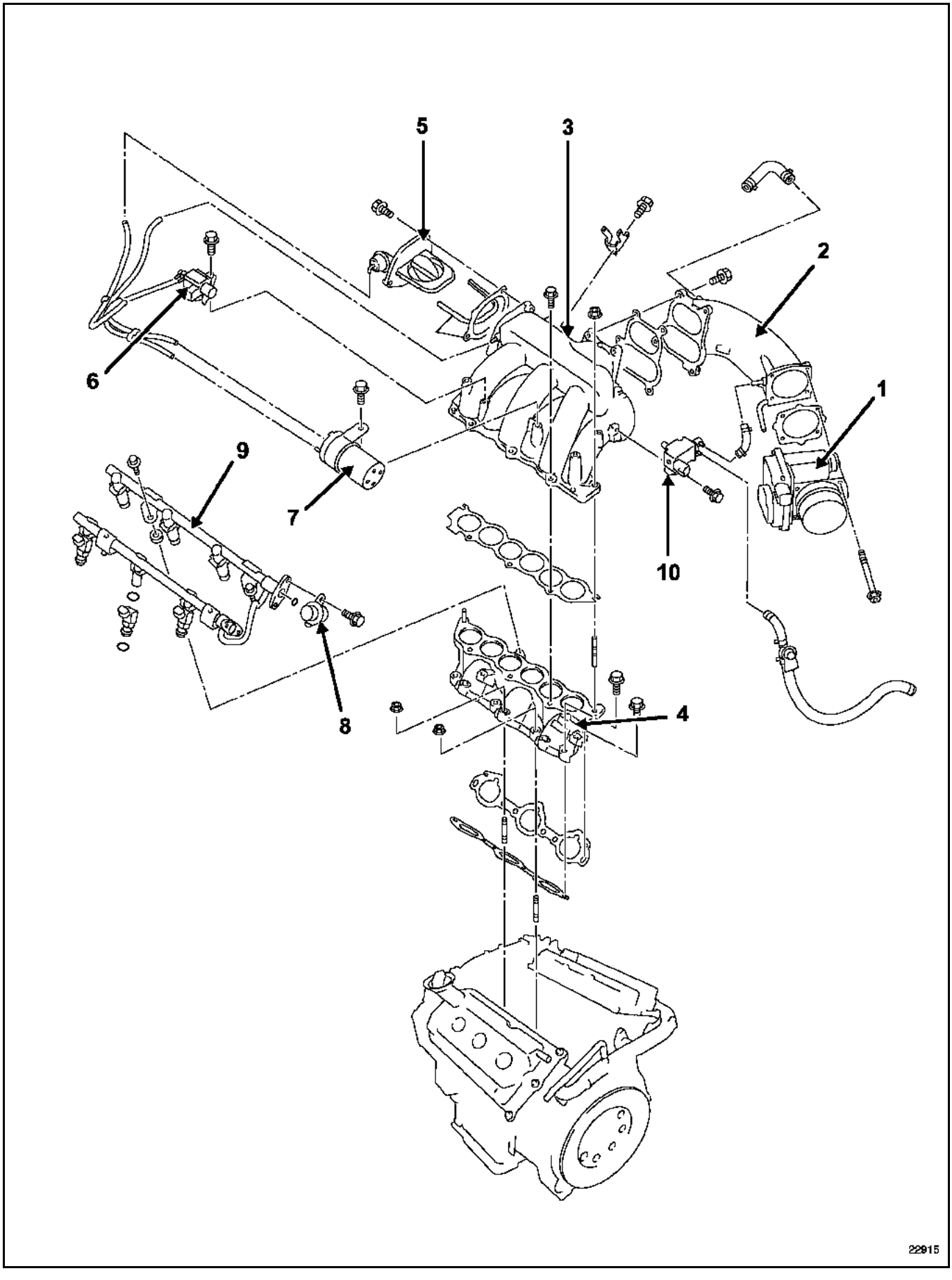

GETtheMANUALS.org

1 Motorised throttle body
2 Plenum chamber duct
3 Plenum chamber
4 Inlet manifold
5 Variable inlet air flap
6 Variable inlet air flap solenoid valve
7 Vacuum canister
8 Pulse damper
9 Injector rail
10 Petrol vapour absorber bleed solenoid valve

GETtheMANUALS.org

TIGHTENING TORQUES (in daNm)	
Cylinder head cover mounting bolt	1.2
Injection rail mounting bolt	2.3
High pressure pipe nuts	2.5

REMOVAL

NOTE:
To remove the plenum chamber the injectors, high pressure pipes and the rail must be removed. (see Section **13B Diesel injection**).

Disconnect:
– the heater plug connectors,
– the exhaust gas recirculation valve connector (1),
– unclip the electrical harness (2) from the plastic protector.

Remove:
– the protector (3) from the electrical harness.

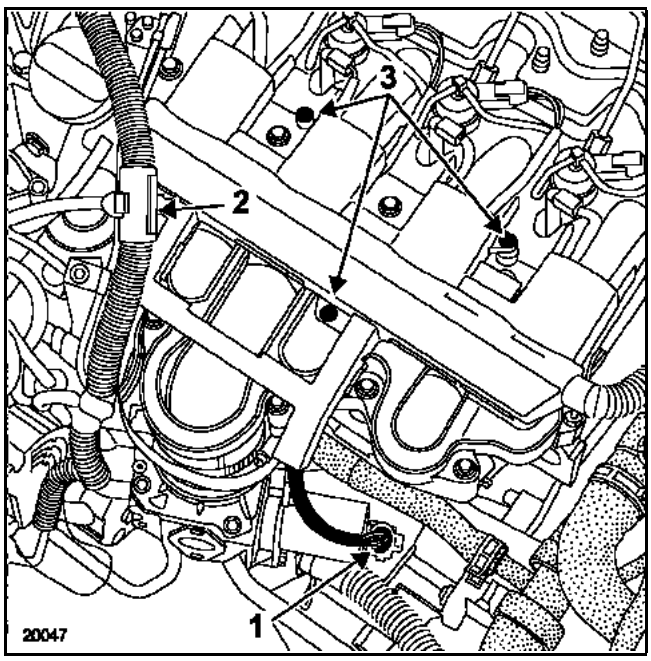

GETtheMANUALS.org

Move aside the electrical harnesses by releasing the top of the plenum chamber.

Loosen the clip (4) from the damper unit/inlet plenum chamber connection pipe.

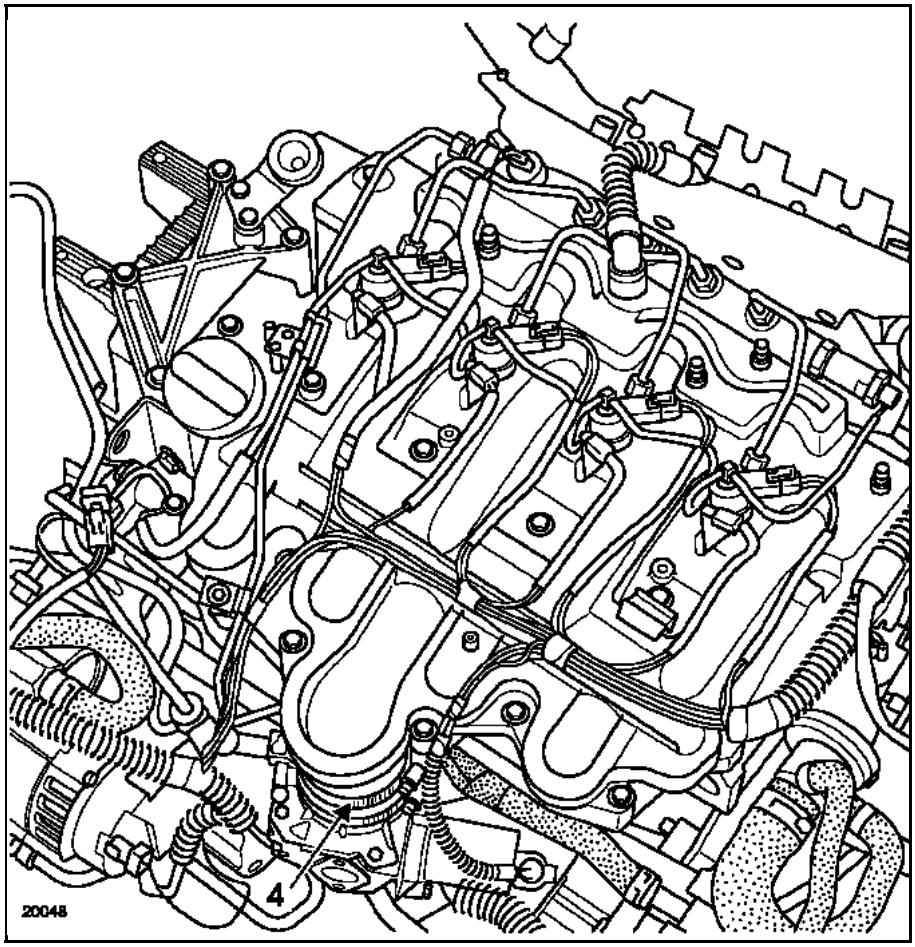

Fit the engine support **Mot. 1367** and remove the suspended mounting.

Remove the manifold mounting bolts and then remove the manifold.

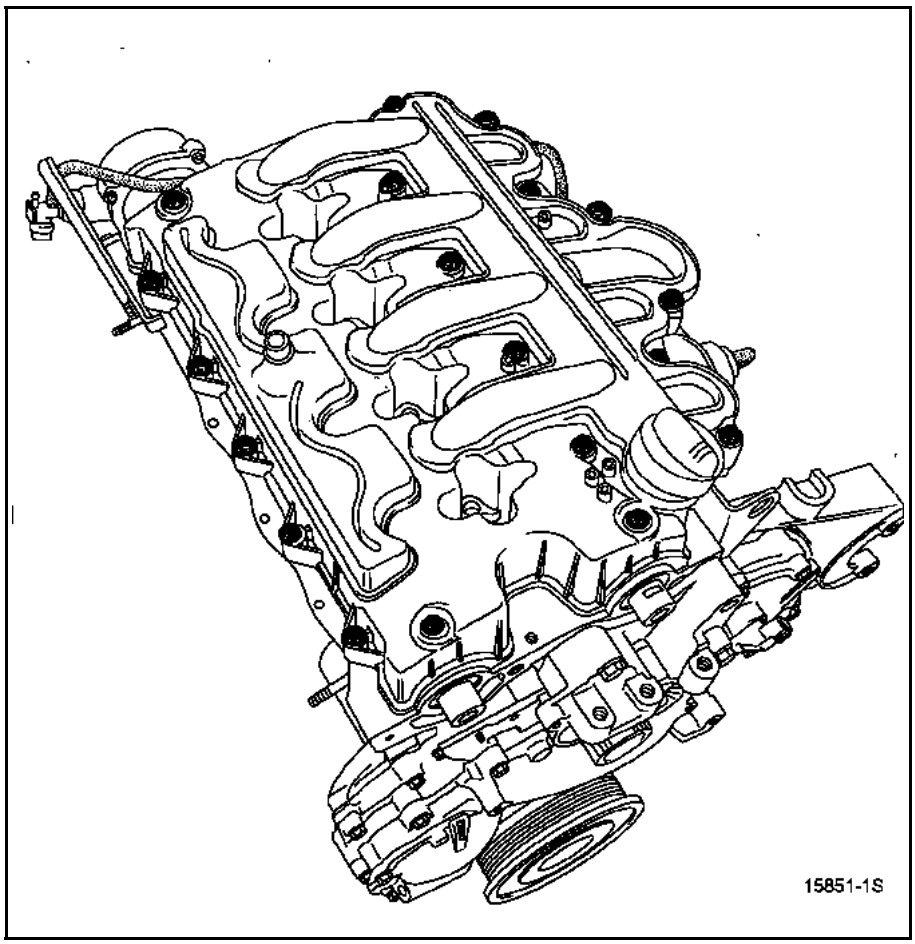

GETtheMANUALS.org

REFITTING

Replace the gaskets with new ones.

Fit all the gaskets on the cylinder head cover/inlet plenum chamber.

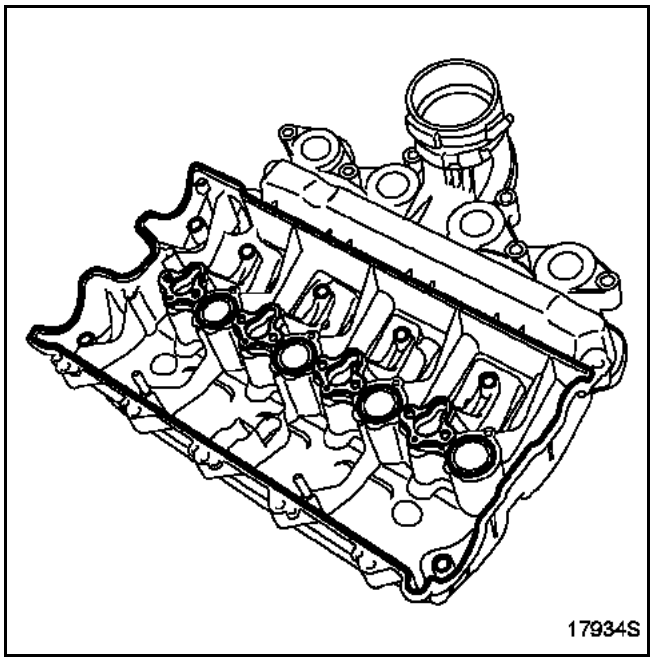

Put **Rhodorseal 5661** in the corners of the camshaft bearing caps and in the valve fastening.

Timing end

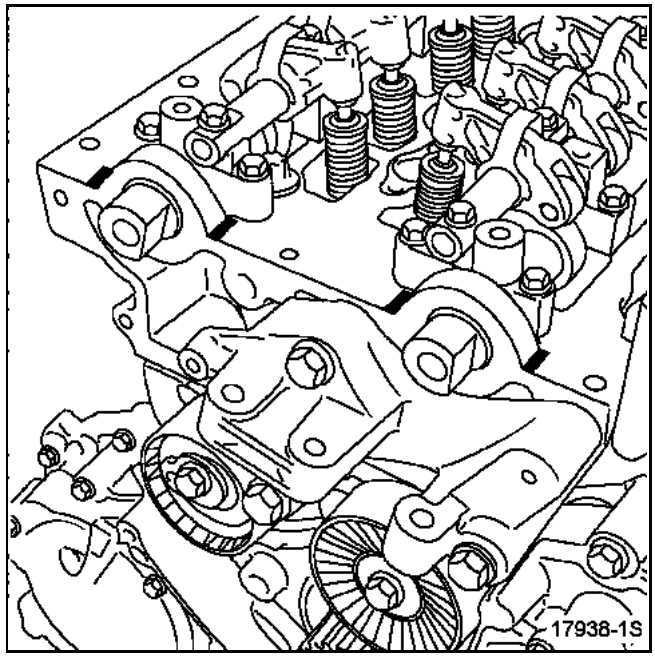

Flywheel end

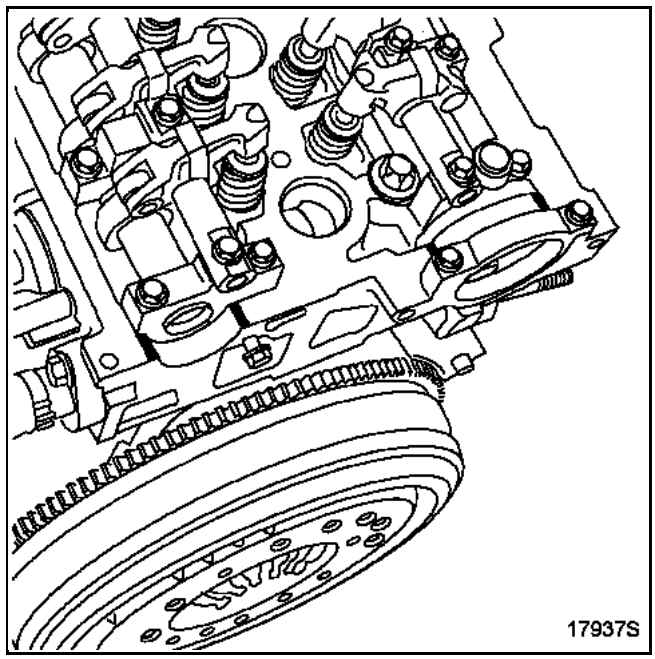

GETtheMANUALS.org

Refit:
– the cylinder head cover/inlet plenum chamber,
– the cylinder head cover mounting bolts so that they touch, by applying a drop of **Loctite Frenbloc** on the bolts (1-2-4-6-8-10-12-13).

Tighten the bolts to a torque of **1.2 daNm** in the recommended order.

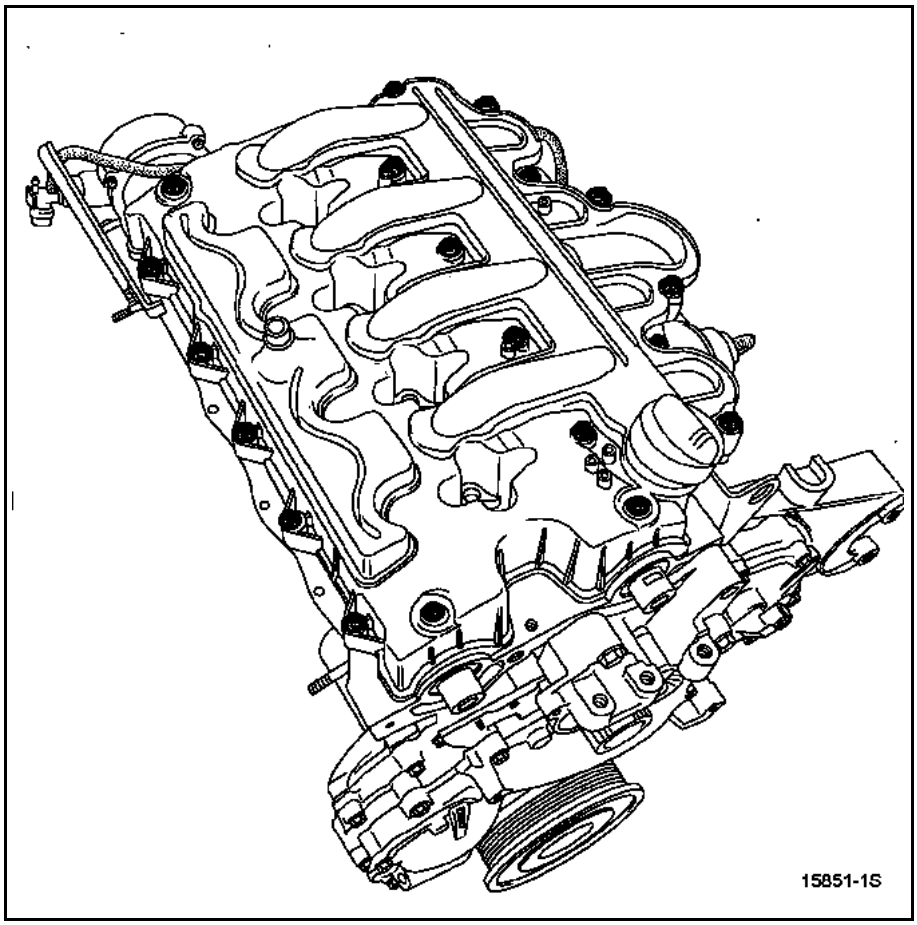

IMPORTANT:
When performing the other refitting operations, proceed in the reverse order to removal making **sure** you observe the order of fitting and recommended tightening torques for refitting the high pressure injector part (see Section **13B Diesel injection Injector**).

GETtheMANUALS.org

TIGHTENING TORQUE (in daNm)	
Inlet manifold mounting bolt	1.2

REMOVAL

NOTE:
To remove the inlet manifold the plenum chamber and the damper unit must be removed (see Section **12A Fuel mixture Plenum chamber** and **Air vent unit**).

Remove:
– the inlet manifold mounting bolts,
– the inlet manifold.

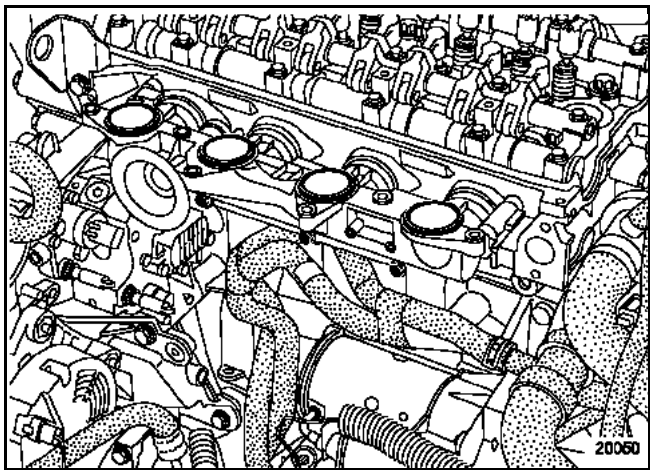

REFITTING

Replace the gaskets on the inlet manifold and the plenum chamber with new ones.

Refit the inlet manifold.

Put the mounting bolts in the inlet distributor **without locking them**.

Refit the plenum chamber/cylinder head cover observing the torques and the recommended order of tightening (see section **12A Fuel mixture "Plenum chamber**).

Tighten the mounting bolts on the inlet manifold to a torque of **1.2 daNm** in the recommended order (1, 2, 3, 4, 5).

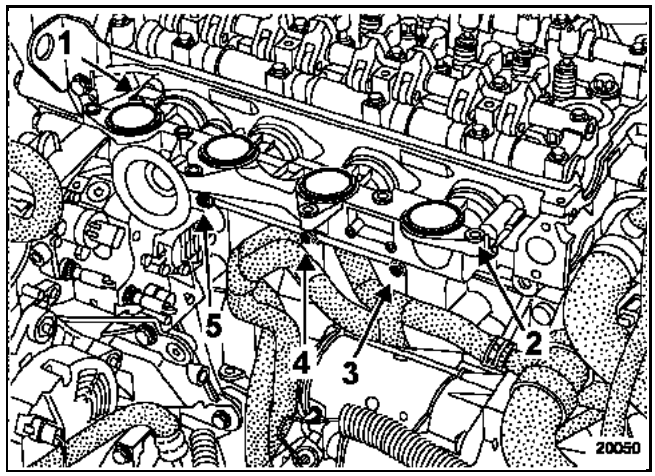

Replace the damper unit (see Section **12A Fuel mixture Air vent unit**).

IMPORTANT:
When performing the other refitting operations, proceed in the reverse order to removal making **sure** you observe the order of fitting and recommended tightening torques for refitting the high pressure injector part (see Section **13B Diesel injection Injector**).

GETtheMANUALS.org

TURBULENCE VALVE

The inlet manifold is fitted with a turbulence valve that alters the flow of inlet gases and filling the cylinder under certain engine operating conditions.

When the valve is closed, the section where air passes into the inlet manifold decreases in size.

DESCRIPTION

The system consists of:
– a turbulence valve incorporated in the inlet manifold,
– a diaphragm (1) activating the turbulence flap,

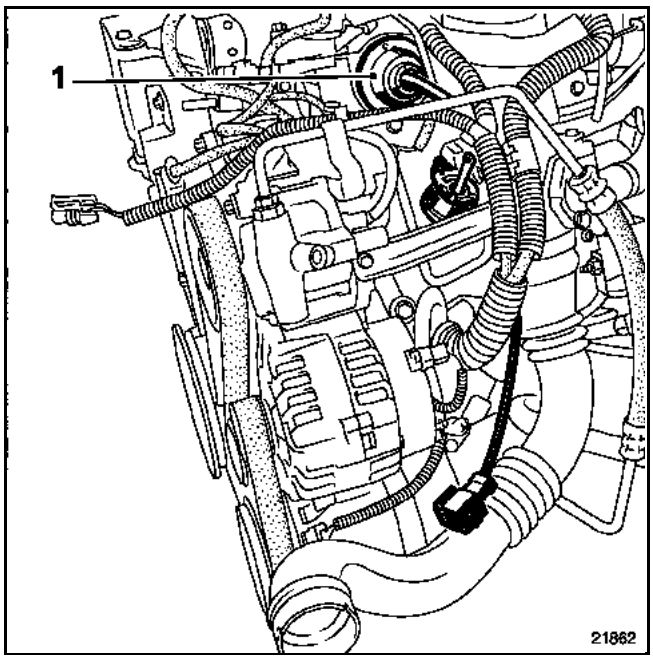

– and a solenoid valve (2).

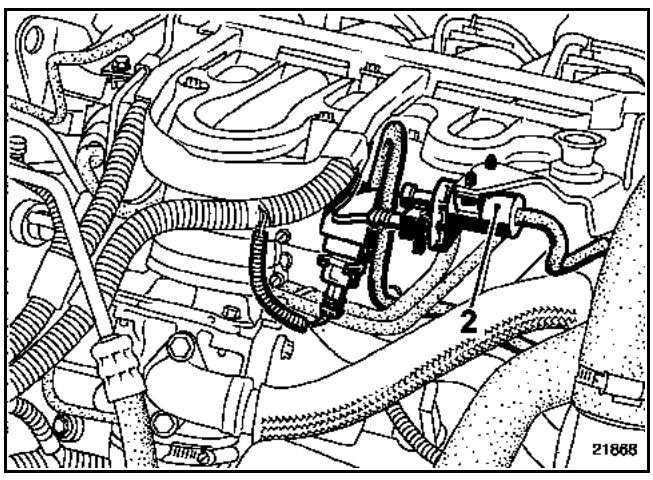

DIAGRAM

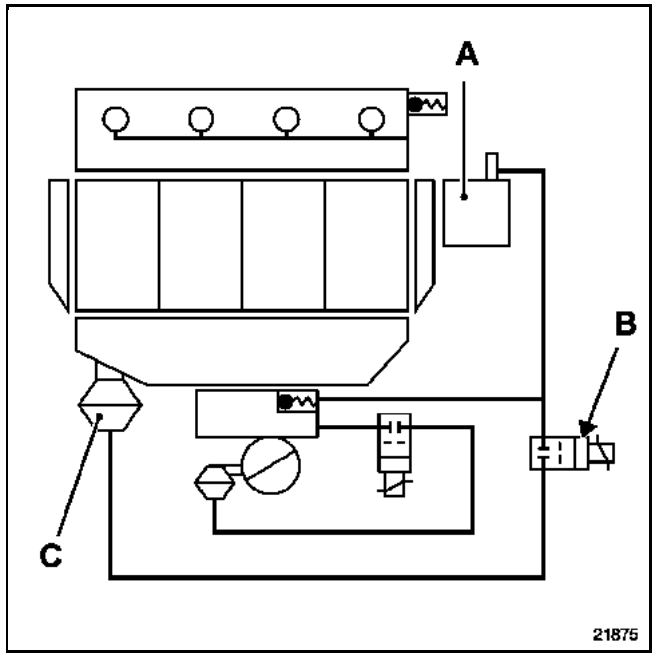

A Vacuum pump
B Turbulence valve solenoid valve
C Swirl valve control diaphragm

OPERATION

The solenoid valve is in the closed position when de-energized. The turbulence valve is open and is not modifying the cross-section where the air passes into the inlet manifold.

When it is energized, the solenoid valve, controlled by the injection computer, connects the vacuum pump (A) and the turbulence valve control diaphragm (C).

The diaphragm is affected by the vacuum of the vacuum pump and closes the turbulence valve.

REMOVAL

The turbulence valve is incorporated in the inlet manifold.

The whole inlet manifold must be replaced in order to replace the turbulence valve.

GETtheMANUALS.org

TIGHTENING TORQUES (in daNm)	▽
Inlet manifold mountings	**2.1**
Engine cover mounting on the inlet manifold	**2.5**
Turbocharger mounting	**2.5**
Heat shield mountings on the turbocharger	**2.1**
Side bracket on the inlet manifold	**2.1**

REMOVAL

Remove the engine covers.

Disconnect the battery.

Disconnect the electrical connectors (1) from:
– the air temperature sensor,
– the turbocharging pressure adjustment solenoid valve,
– the wastegate position sensor,
– the damper control solenoid valve.

Disconnect the air hoses (2) on:
– the wastegate diaphragm,
– the turbocharging pressure adjustment solenoid valve,
– the vacuum canister,
– the diaphragm activating the damper flap,
– the vacuum pump.

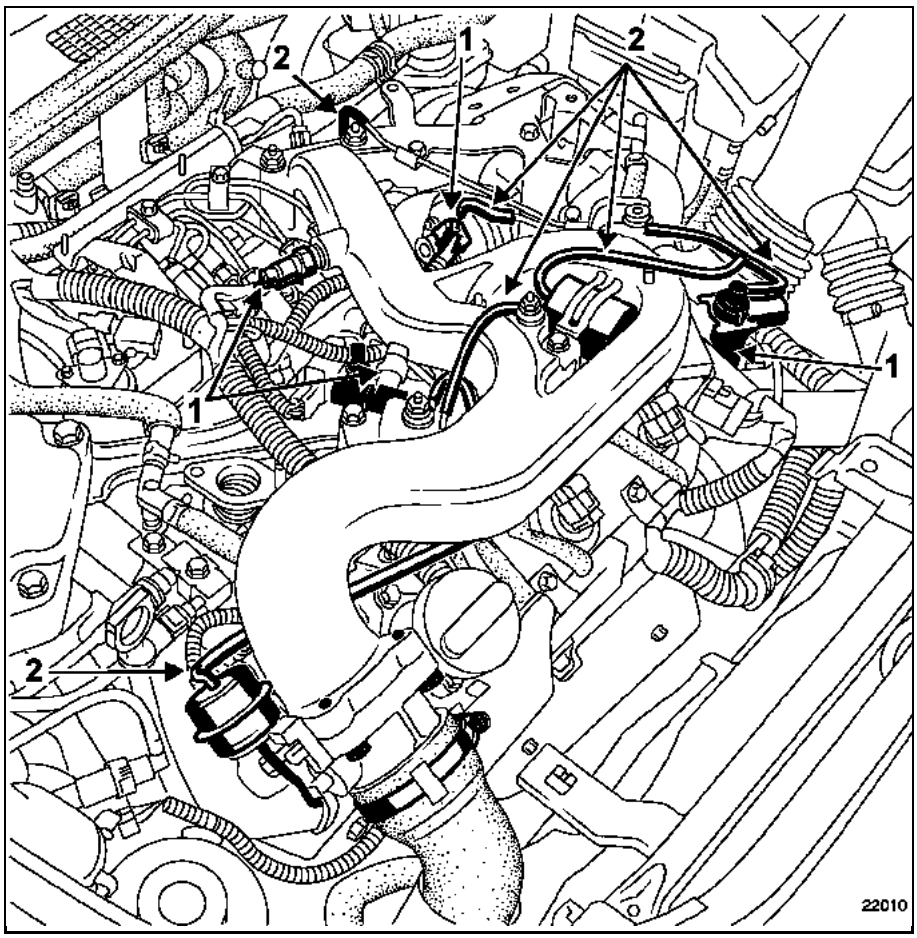

GETtheMANUALS.org

Remove:
– the turbocharger heat shield mountings (3),

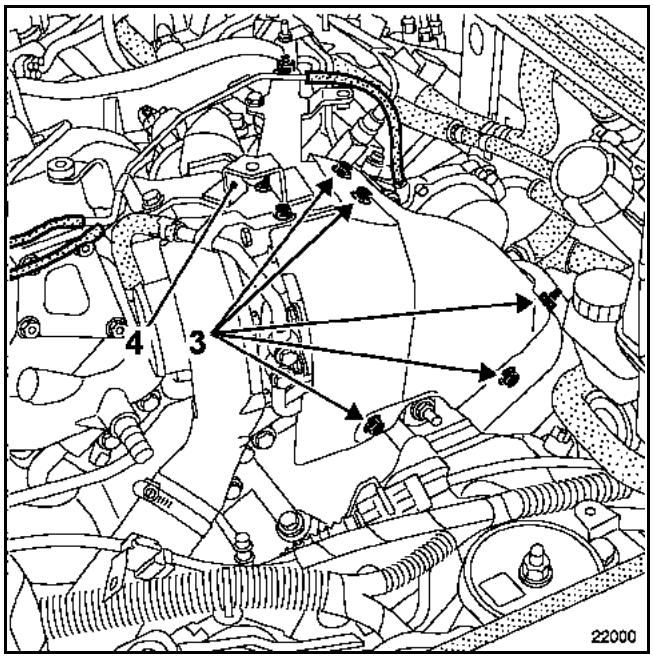

– the support mountings (4) on the turbocharger,
– the mounting,
– the heat shield on the turbocharger,
– the engine cover mounting (5) on the inlet manifold.

Disconnect the air intake duct on the damper.

Remove the mountings (6):
– from the side bracket on the inlet manifold
– from the inlet manifold on the exhaust gas recirculation pipe,
– from the inlet manifold.

Remove the inlet manifold then the gaskets.

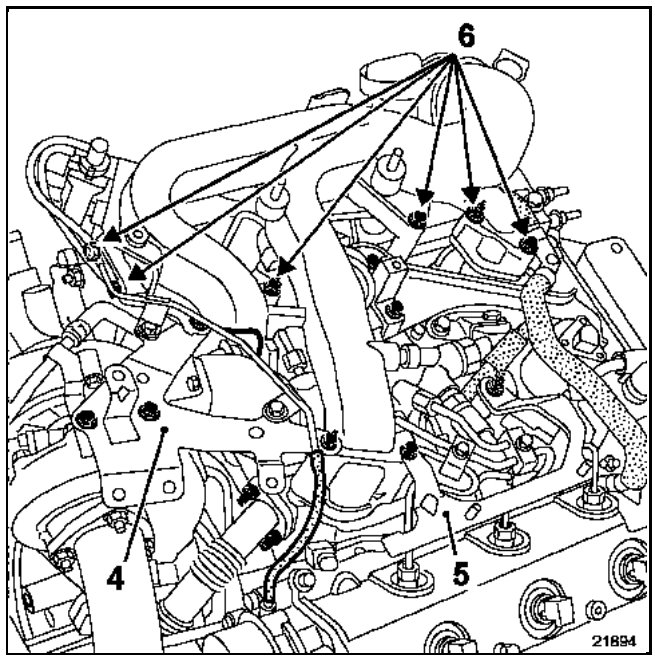

Remove the following to the workbench:
– the solenoid valve,
– the vacuum canister,
– the damper (see **Engine shutdown system** operation).

GETtheMANUALS.org

REFITTING

Replace the seals.

Replace the inlet manifold then tighten the mountings to a torque of **2.1 daNm** in the recommended order.

The rest of the operations should be performed in the reverse order to removal.

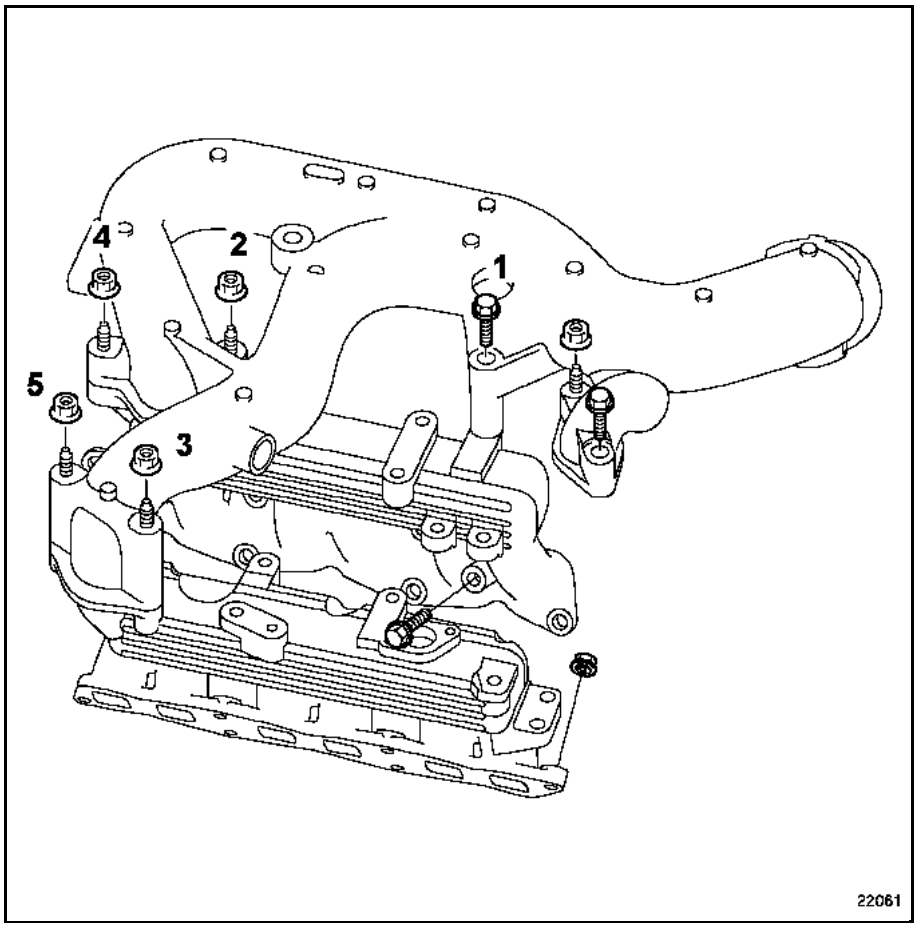

GETtheMANUALS.org

TIGHTENING TORQUES (in daNm)	
Plenum chamber mountings	3.1
Movement limiter mountings on the body	10.5
Mountings on the engine for the suspended engine mounting cover	6.2
Acoustic earth mountings on the body	2.1
Acoustic damper mounting on the front plenum chamber	2.5

YOU SHOULD FOLLOW THE CLEANLINESS INSTRUCTIONS CLOSELY

REMOVAL

Put the vehicle on a two-post lift.

Disconnect the battery.

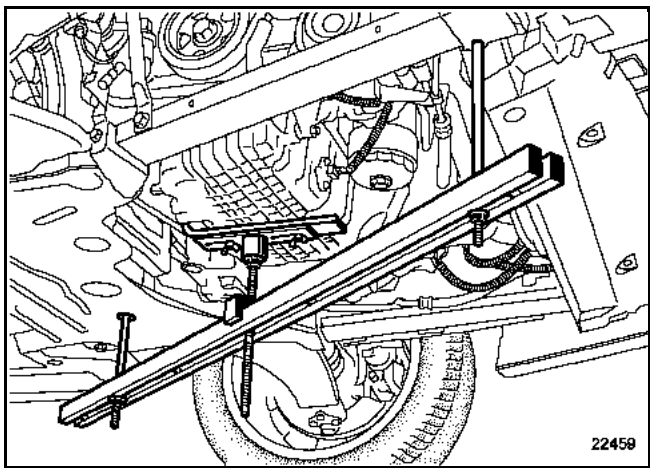

Fit the engine support **Mot. 1367-02**.

Release the diesel supply ducts on the suspended engine mounting.

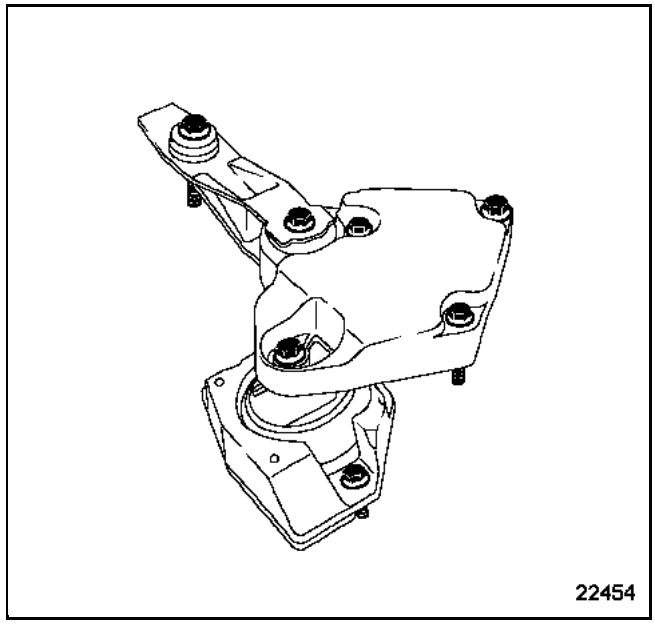

Remove the engine suspension mounting-movement limiter assembly.

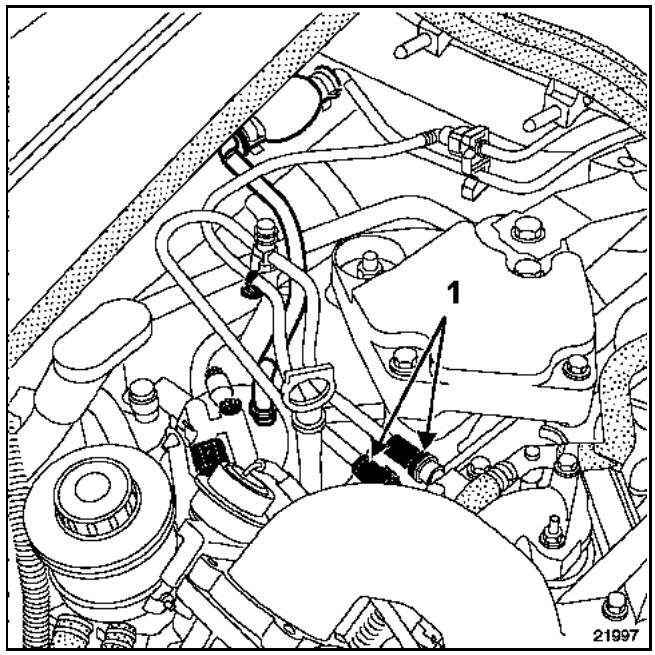

Disconnect the diesel supply and return ducts (1) then block the ducts using the cleanliness plugs kit, available from the Parts Department.

GETtheMANUALS.org

Remove the inlet manifold (see **Inlet manifold** operation).

Disconnect:
– the various connectors and actuators of the wiring harness (2) then release this from the side,
– the oil vapour rebreathing pipes on the union at "T" (3) then the pipe (4). Remove this from the side.

Release the connector (5) then remove the acoustic damper (6).

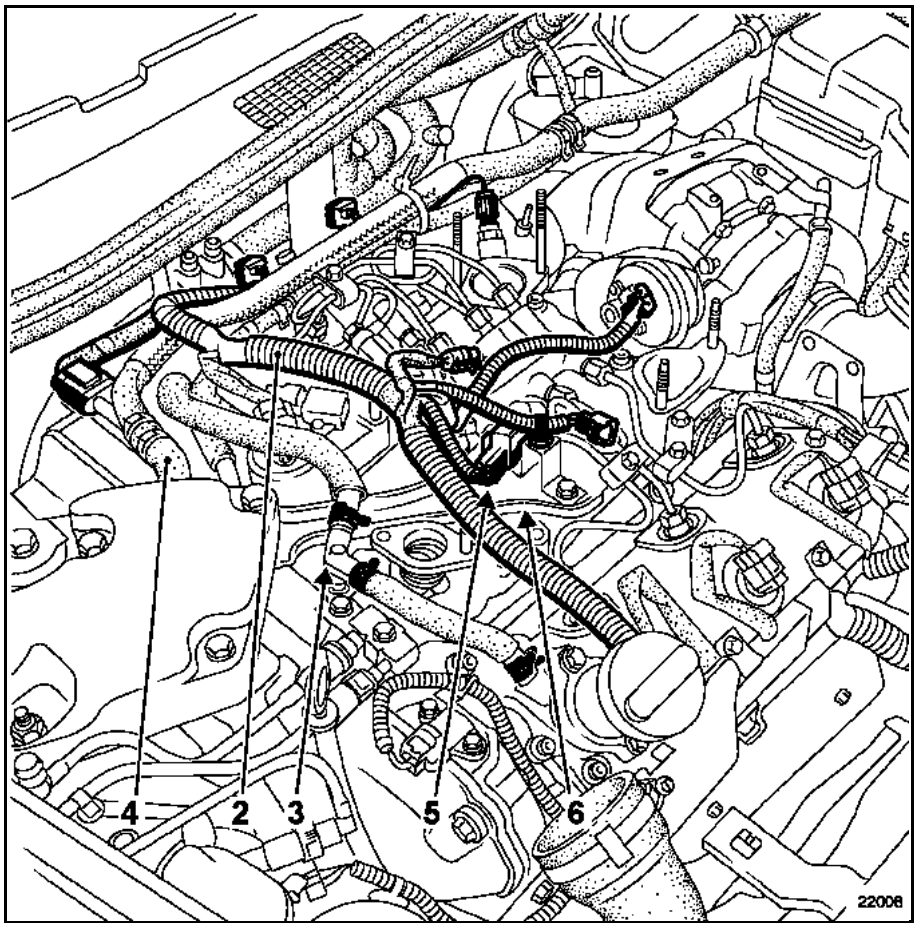

GETtheMANUALS.org

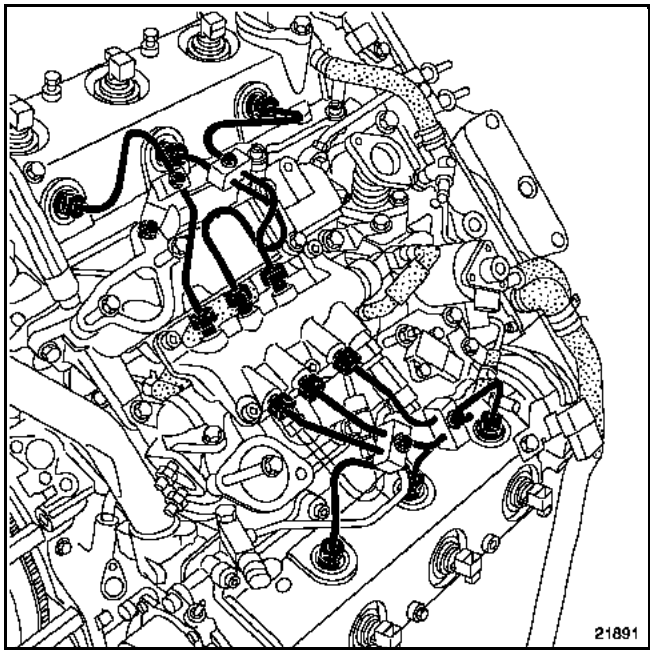

Undo the injector-rail high pressure pipe unions.

If necessary, undo the retaining brackets of the various pipes.

Remove the high pressure pipes.

Fit anti-pollution plugs.

Remove:
– the two mounting bolts from the wastegate diaphragm then release it on the side,
– the high pressure rail (see relevant operation in section **13B Diesel injection Injector rail**).

Remove:
– the exhaust gas recirculation - exchanger solenoid valve (**see the procedure Exhaust gas recirculation valve - Exchanger**),

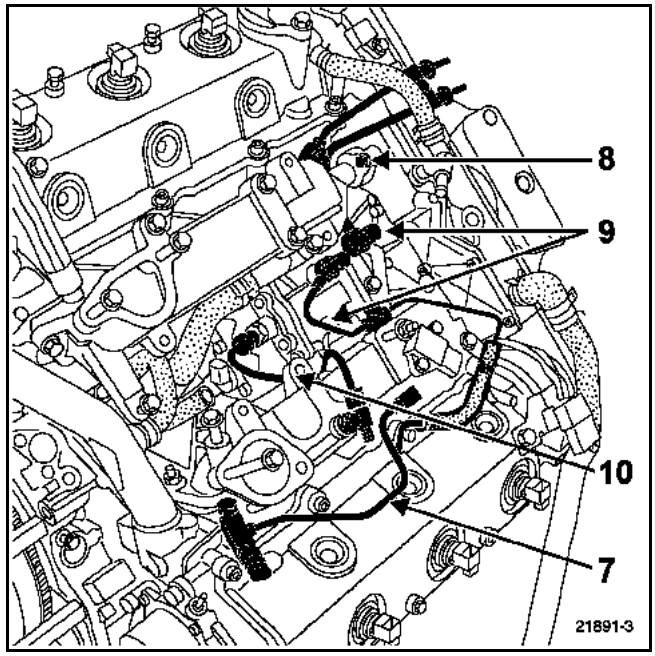

– the return pipe (7) with the diesel temperature sensor,
– the oil vapour recirculation pipe mountings (8),
– the bracket then the unions on the pump and the cylinder head of the diesel return and supply pipes (9).

Release:
– the oil vapour recirculation pipe on the side,
– the diesel supply and return pipes.

Remove the pump outlet high pressure pipe (10) as well as the union on the plenum chamber.

Fit anti-pollution plugs.

GETtheMANUALS.org

Remove:
– the plenum chamber from the front and/or rear bank,
– the gaskets.

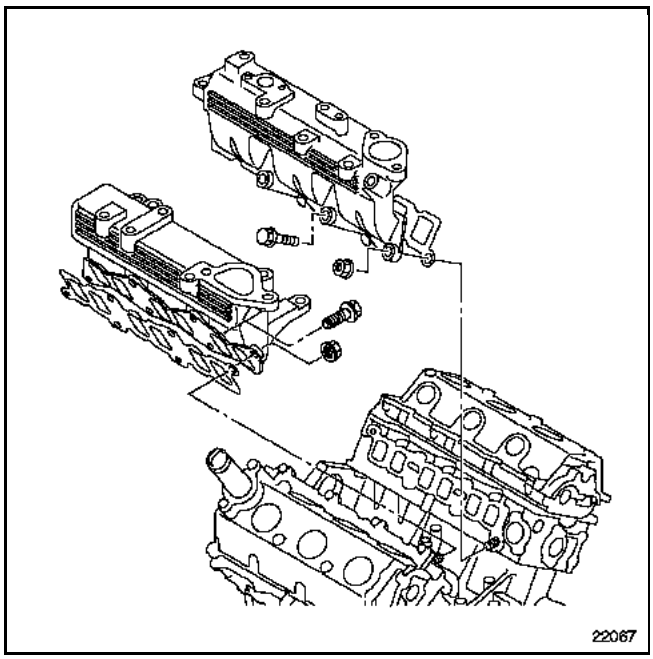

REFITTING

Replace all the seals on the air intake circuit.

Refit the plenum chamber(s) then tighten the mountings observing the recommended torque and order.

Refit the diesel supply and return pipes then tighten them to the recommended torques (see Section **13B Diesel injection Injection pump**).

Refit the injector rail (see Section **13B Diesel injection Injector rail**).

Refit the high pressure pipes and tighten them to the recommended torque (see relevant operation in Section **13B Diesel injection High pressure pipes**).

Refit in the reverse order to removal for the other refitting operations.

Reprime the diesel circuit using the priming bulb.

Test the sealing of the high pressure circuit after repair (see Section **13B Diesel injection Special notes**).

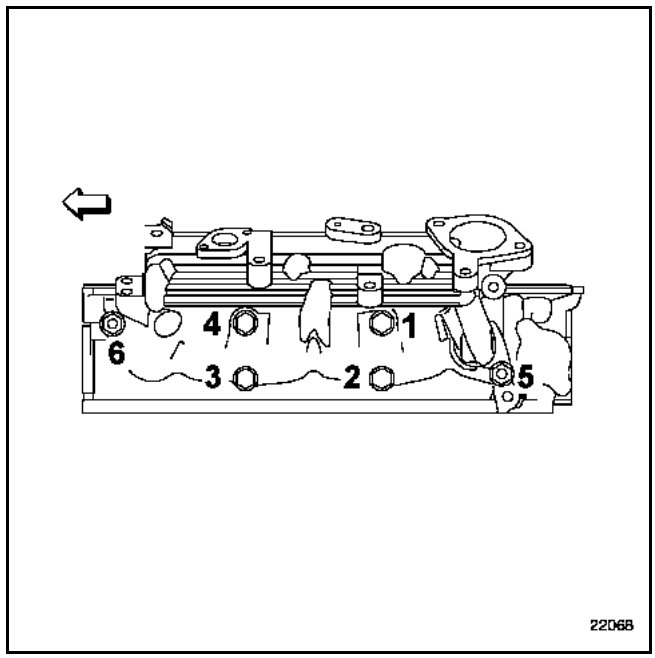

GETtheMANUALS.org

TIGHTENING TORQUE (in daNm and/or°)	
Manifold nuts	2
Turbocharger nuts	1 + 90°
Oxygen sensor	3.4

REMOVAL

Put the vehicle on a two-post lift.

Disconnect the battery.

Remove:
– the catalytic converter (see Section **19B Exhaust Catalytic converter**),
– the turbocharger (see Section **12B Turbocharging Turbocharger**),
– the exhaust manifold nuts.

REFITTING

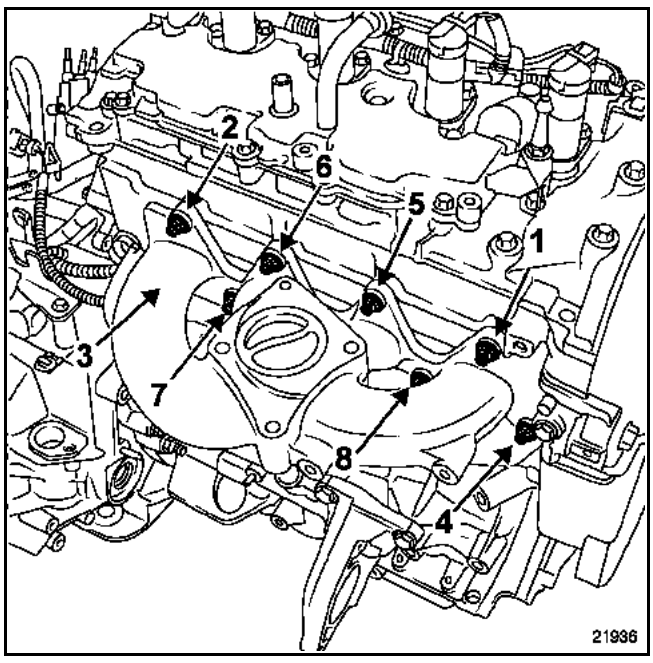

Proceed in the reverse order to removal.

Use the correct order and tightening torque for the mountings nuts of the manifold.

Replace the gaskets of the manifold and the manifold nuts.

IMPORTANT

Fit:
– the turbocharger on the exhaust manifold,
– the oil supply pipe on the turbocharger,
– the oil return pipe to the cylinder block.

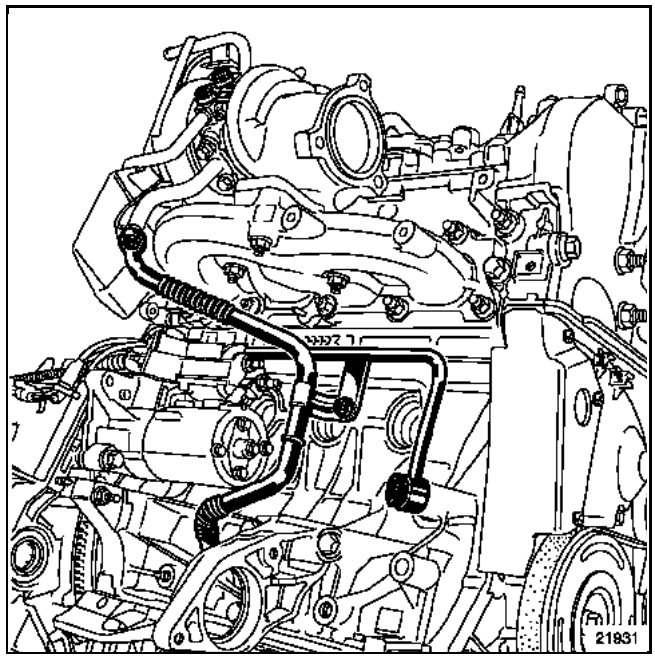

Tighten the clamp on the exchanger/turbocharger air pipe to position the turbocharger.

NOTE:
Test the sealing on the turbocharger oil return and supply pipes (see Section **12B Turbocharging Turbocharger**).

Position the catalytic converter by tightening the struts of the catalytic converter then by tightening the turbocharger and exhaust pipe brackets (see Section **19B Exhaust Catalytic converter**).

GETtheMANUALS.org

TIGHTENING TORQUES (in daNm)	
Manifold mounting studs	1.5 ± 0.2
Manifold mounting nuts	3 ± 0.3
Heat shield mounting bolt	0.6
Exhaust pipe clamp bolt	2.5

REMOVAL

Put the vehicle on a two-post lift.

Disconnect the battery.

Disconnect and remove the oxygen sensor (1).

Removal of the exhaust manifold requires removal of the front preconverter (see Section **19B Exhaust Front Preconverter**).

Remove the mounting bolts from the front exhaust manifold.

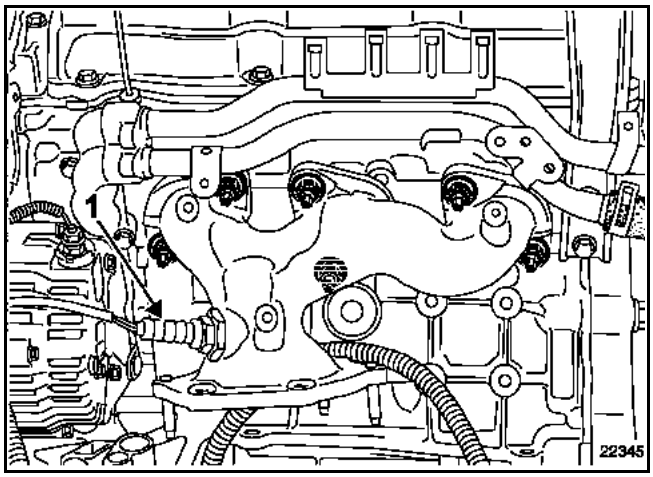

REFITTING

Replace the gasket on the exhaust manifold with a new one.

Proceed in the reverse order to removal.

Use the correct order and tightening torque for the mountings nuts of the manifold.

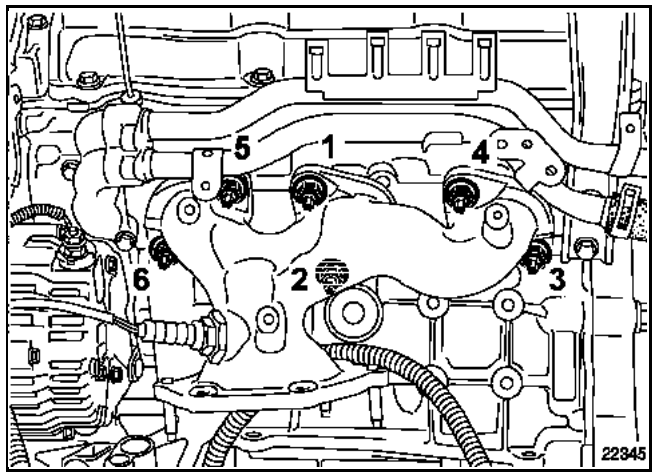

GETtheMANUALS.org

TIGHTENING TORQUE (in daNm)	
Manifold mounting studs	1.5 ± 0.2
Manifold mounting nuts	3 ± 0.3

REMOVAL

Put the vehicle on a two-post lift.

Disconnect the battery.

The removal of the rear bank exhaust manifold requires the removal of the rear bank converter (see Section **19B Exhaust Rear bank Preconverter**).

Disconnect and remove the oxygen sensor (1).

Remove the mounting bolts from the rear exhaust manifold.

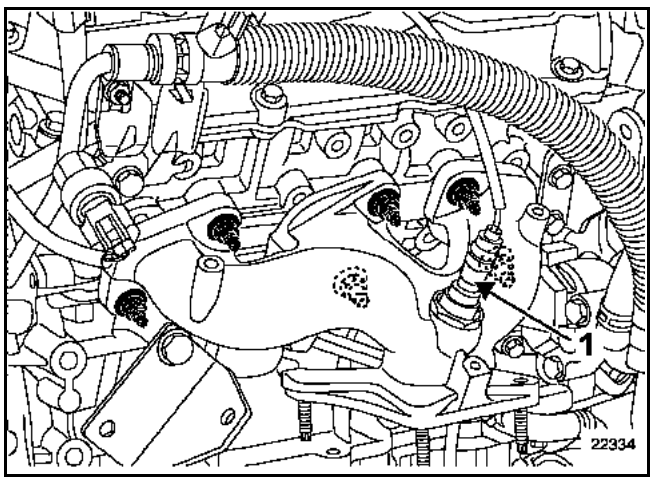

REFITTING

Replace the gasket on the exhaust manifold with a new one.

Proceed in the reverse order to removal.

Use the correct order and tightening torque for the mountings nuts of the manifold.

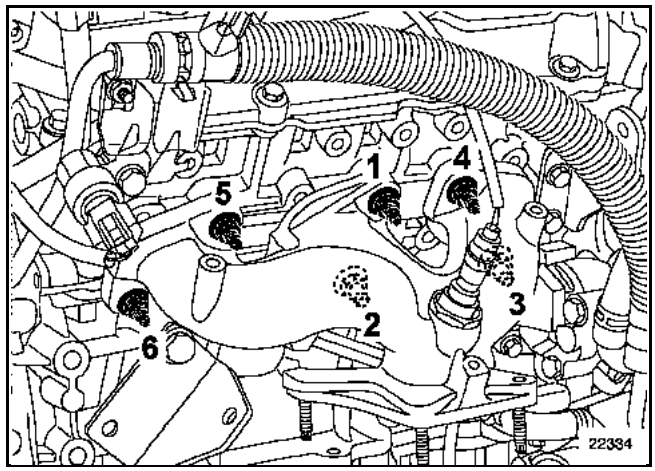

GETtheMANUALS.org

TIGHTENING TORQUES (in daNm)	▽
Manifold mounting stud	0.8 ± 0.2
Manifold mounting nut	2.7 ± 0.4
Heat shield mounting bolt	1 ± 0.2

REMOVAL

NOTE:
To remove the exhaust manifold the turbocharger needs to be removed (see Section **12B Turbocharging Turbocharger**).

Remove:
– the exhaust manifold heat shield,
– the mounting nuts for the exhaust manifold.
– the exhaust manifold.

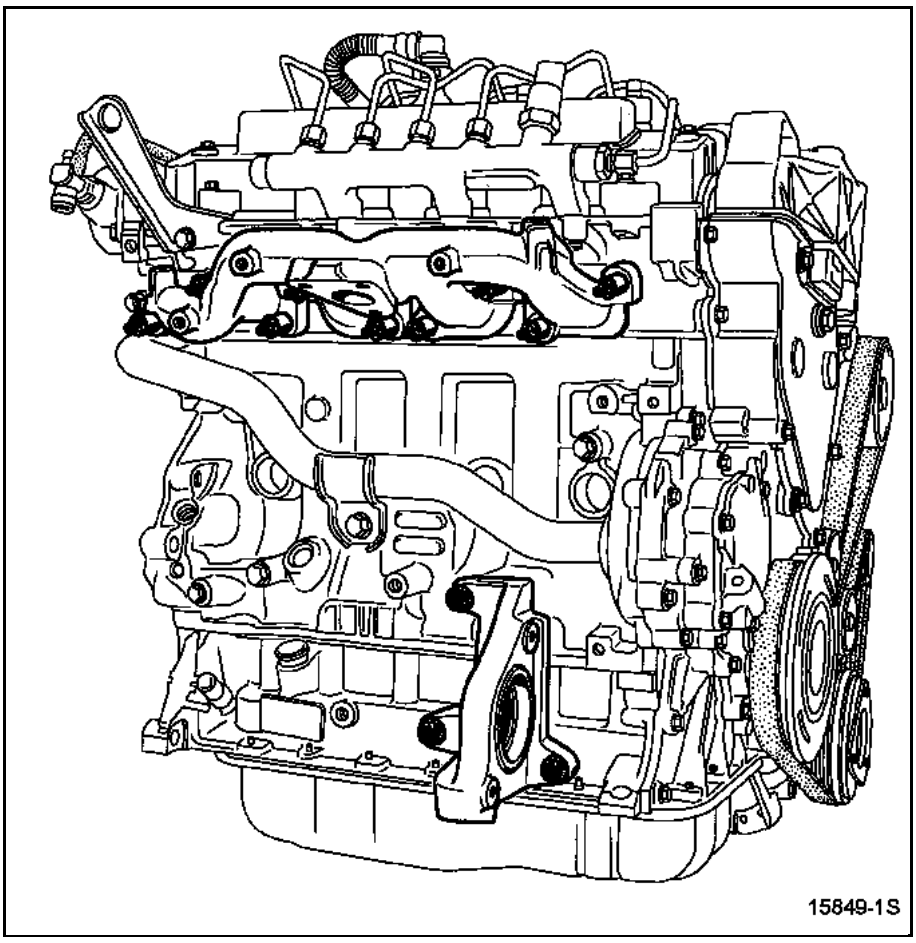

GETtheMANUALS.org

REFITTING

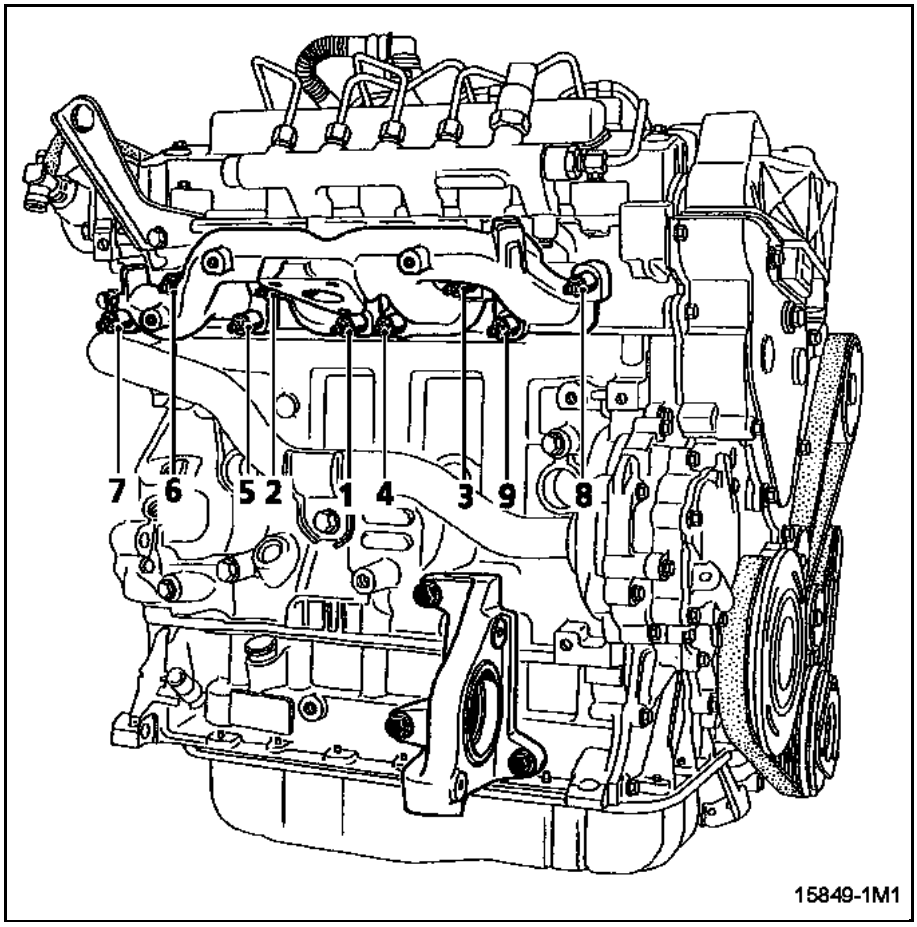

Proceed in the reverse order to removal.

Use the correct order and tightening torque for the mountings nuts of the manifold.

Change the exhaust manifold gasket.

GETtheMANUALS.org

TIGHTENING TORQUES (in daNm)	
Exhaust manifold mountings on the cylinder head	5.2
Manifold/turbocharger intermediate pipe mountings on the manifold	5.2
Heat shield mountings	2.1
Turbocharger mounting	2.5

REMOVAL

Put the vehicle on a two-post lift.

Remove the engine covers.

Disconnect the battery.

Unclip then remove the relay unit from the side.

Remove:
– the heat shield mountings (1) on the turbocharger,
– the mountings (2),
– the turbocharger mounting. To do this, disconnect the various air hoses,
– the heat shield,

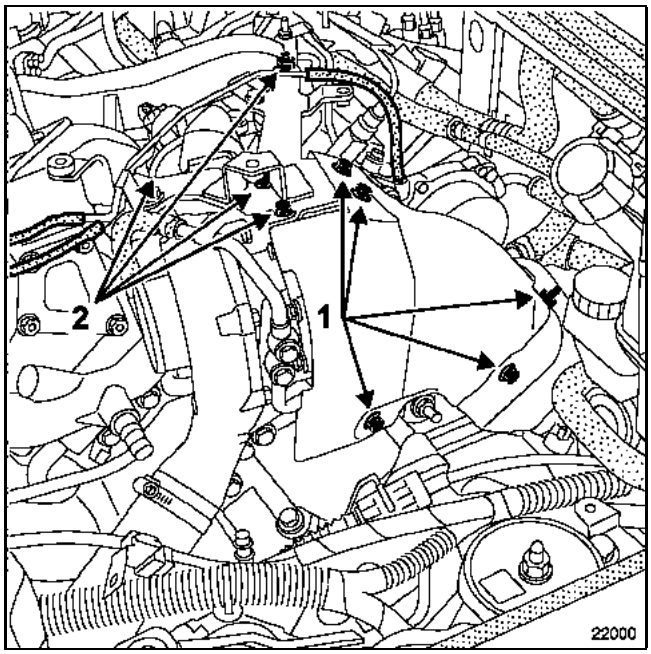

GETtheMANUALS.org

– the heat shield mountings (3) on the manifold/turbocharger intermediate exhaust pipe,
– the heat shield,
– the heat shield mountings (4) on the exhaust manifold,
– the heat shield,

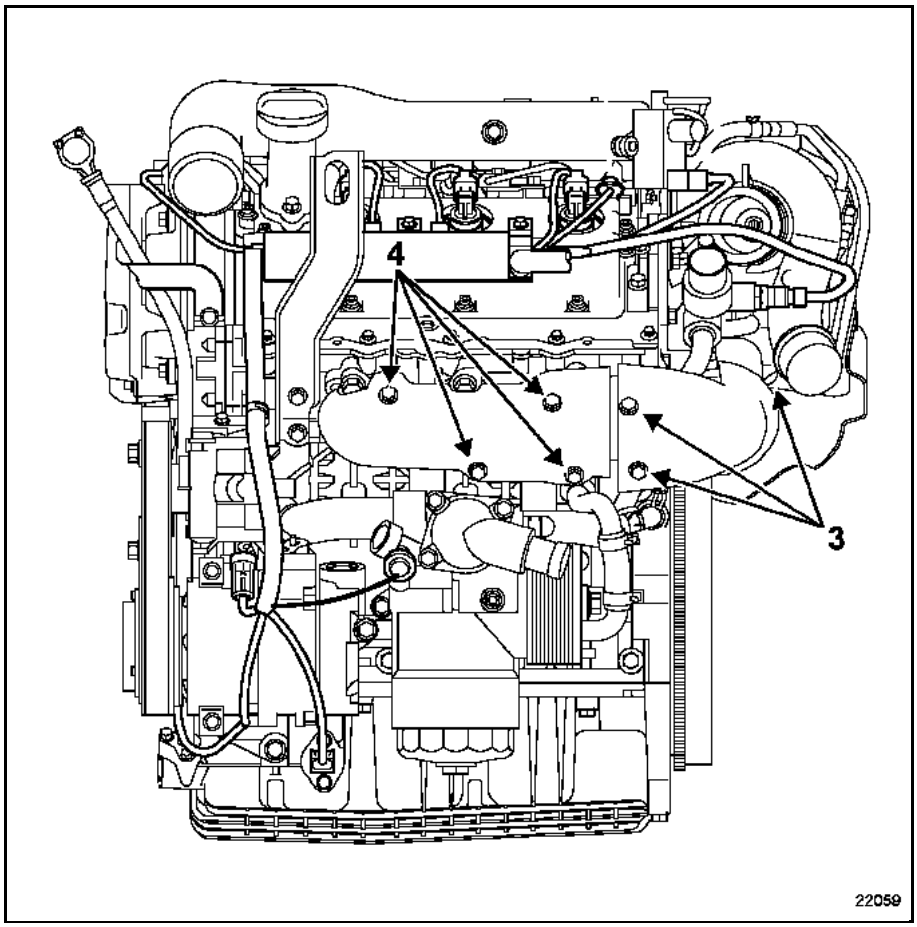

GETtheMANUALS.org

– the exhaust manifold mountings (5),
– the manifold,
– the gasket (6).

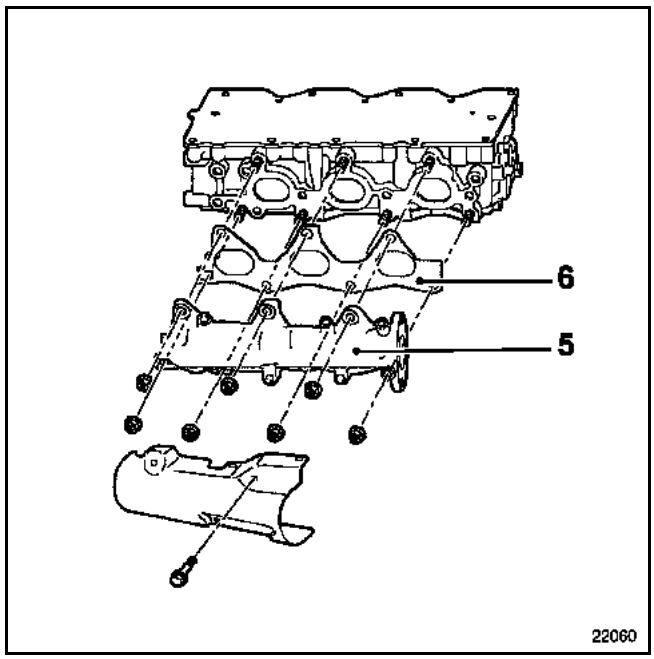

REFITTING

Replace the seal on the manifold and the intermediate exhaust pipe.

Refit the manifold then tighten the mountings observing the recommended torque and order.

Refit in the reverse order to removal for the other refitting operations.

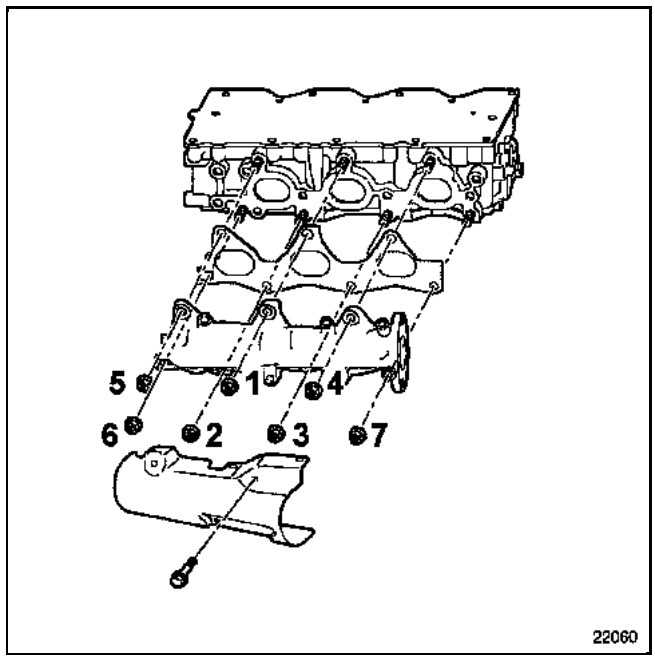

GETtheMANUALS.org

TIGHTENING TORQUES (in daNm)	
Exhaust manifold mountings on the cylinder head	**5.2**
Manifold/turbocharger intermediate pipe mountings on the manifold	**5.2**
Heat shield mountings	**2.1**
Turbocharger mounting	**2.5**
Exhaust down pipe:	
– on the turbocharger	**2.1**
– on the catalytic converter	**2.1**
Preconverter strut mountings	**2.1**
Preconverter bracket mountings	**2.1**

REMOVAL

Put the vehicle on a two-post lift.

Remove the engine covers.

Disconnect the battery.

Unclip then remove the relay unit from the side.

Remove:
– the mountings (1) on the heat shield on the turbocharger,
– the mountings (2),
– the turbocharger mounting. To do this, disconnect the various air hoses,
– the heat shield,

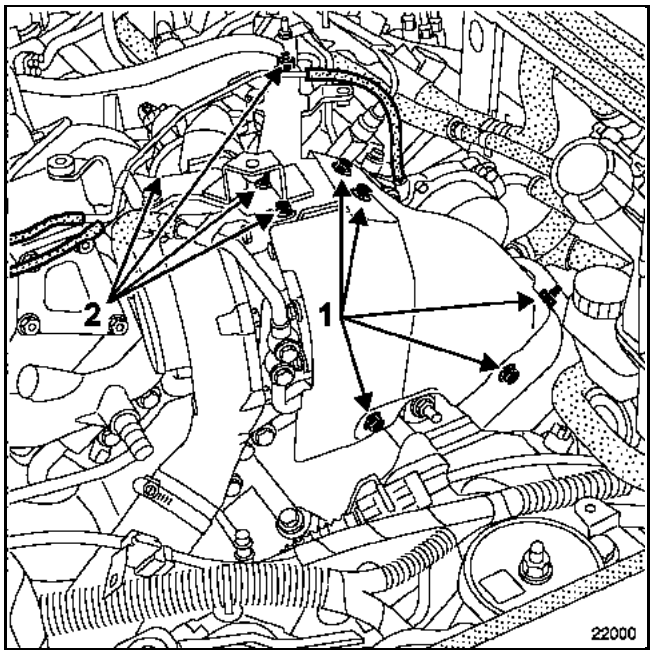

– the preconverter heat shield mounting (3),
– the heat shield,

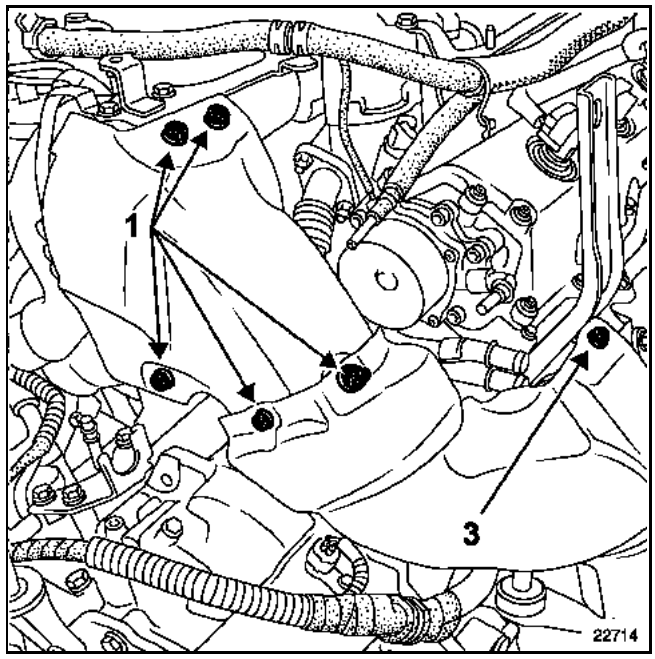

– the exhaust mountings downpipe (4).

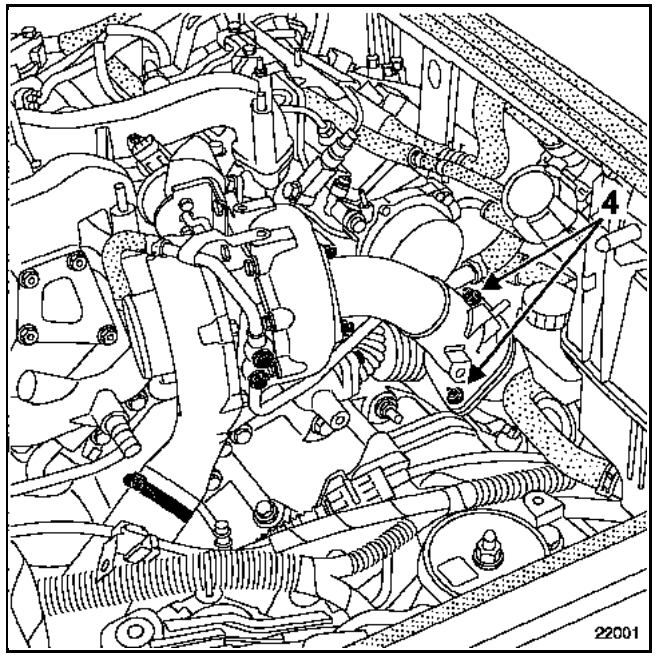

GETtheMANUALS.org

Under the vehicle:

Remove:
– the engine undertray.
– the catalytic converter.

Release the preconverter on the side. To do this, remove the strut (5) and the mounting bracket (6) from the preconverter.

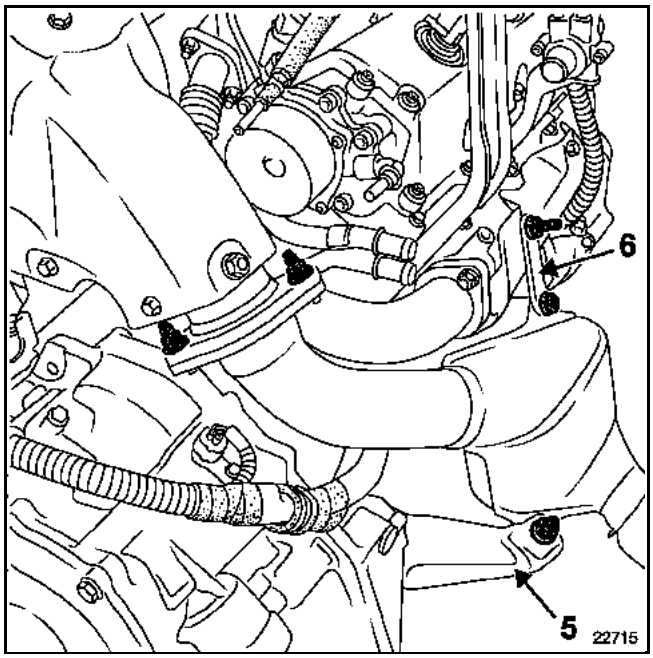

Disconnect the electrical connections to the alternator.

Remove:
– the exhaust manifold heat shield,
– the mountings on the manifold/turbocharger intermediate pipe on the exhaust manifold,
– the exhaust manifold mountings,
– the manifold,
– the gasket.

REFITTING

Replace the gaskets
– on the manifold,
– on the exhaust intemediate pipe,
– on the preconverter.

Refit the manifold then tighten the mountings observing the recommended torque and order.

Refit in the reverse order to removal for the other refitting operations.

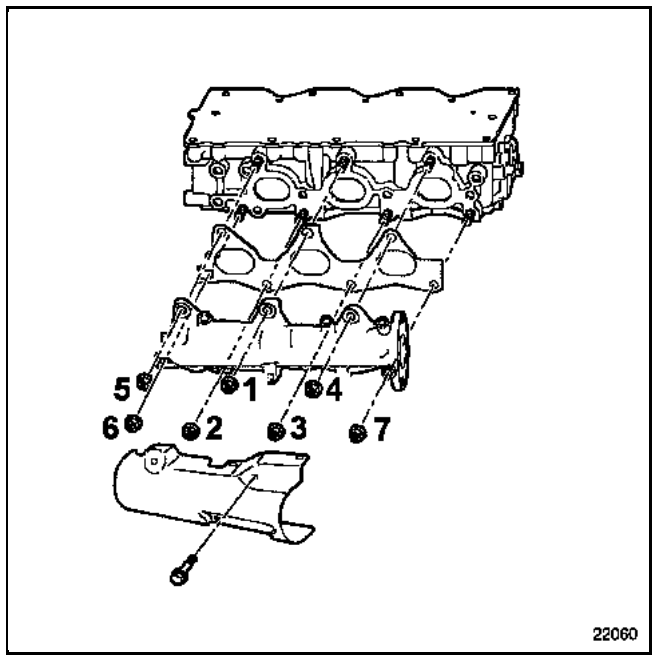

GETtheMANUALS.org

TIGHTENING TORQUES (in daNm)	
Turbocharger mounting	2.5
Manifold/turbocharger intermediate pipe mountings	5.2
Heat shield mountings	2.1
Exhaust gas recirculation pipe mounting	2.1
Exhaust downpipe mounting on the preconverter	2.1

REMOVAL

Put the vehicle on a two-post lift.

Remove the engine covers.

Disconnect the battery.

Front manifold/turbocharger intermediate pipe

Remove the turbocharger (see relevant operation in Section **12B Turbocharging Turbocharger**).

Remove the front manifold/ turbocharger on the workbench.

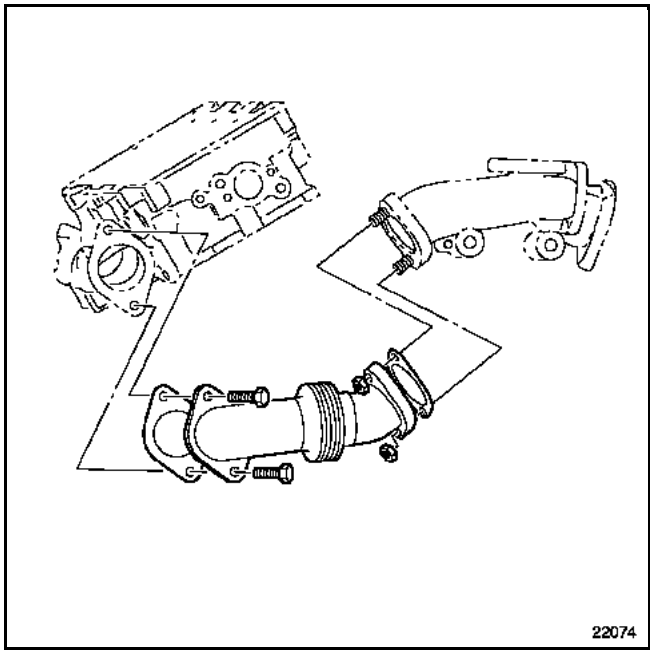

Rear manifold/turbocharger intermediate pipe

Unclip then remove the relay unit from the side.

Remove:
- the mountings (1) on the heat shield on the turbocharger,
- the mountings (2),
- the turbocharger mounting. To do this, disconnect the various air hoses,
- the heat shield.

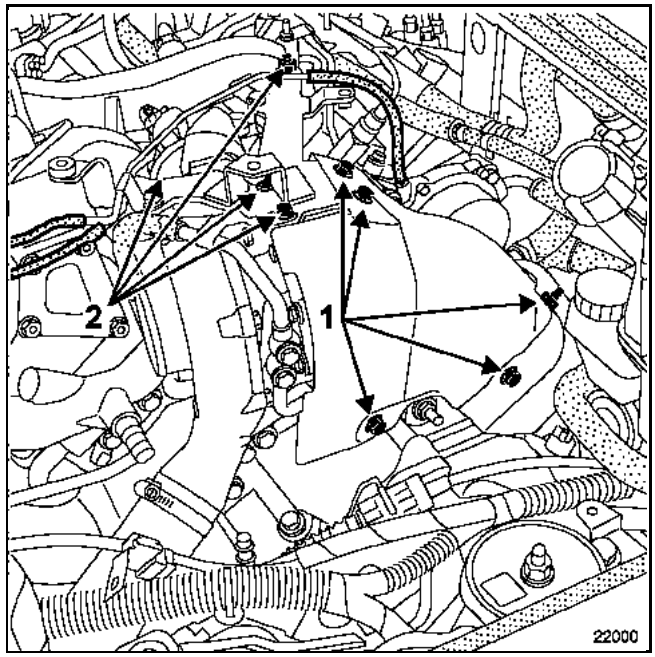

GETtheMANUALS.org

Remove:
– the preconverter heat shield mounting (3),
– the heat shield,

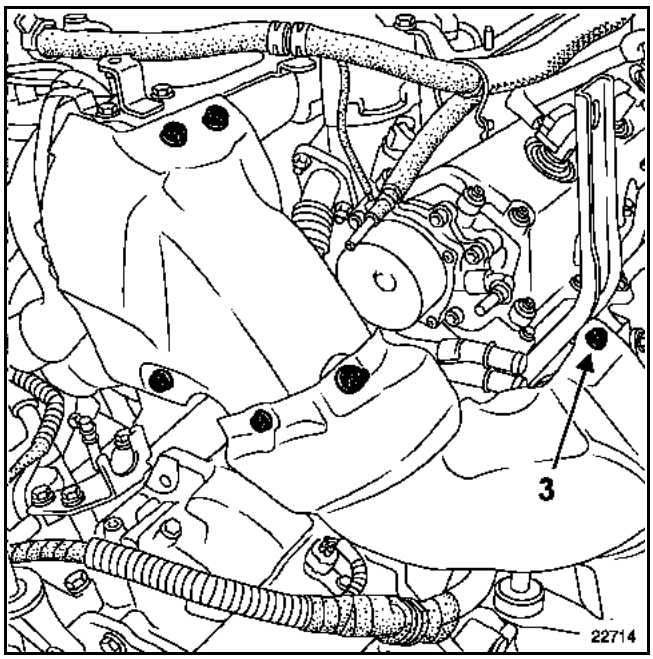

– the exhaust downpipe mountings (4),
– the exhaust gas recirculation pipe (5),
– the manifold/turbocharger intermediate pipe (6) on the turbocharger manifold.

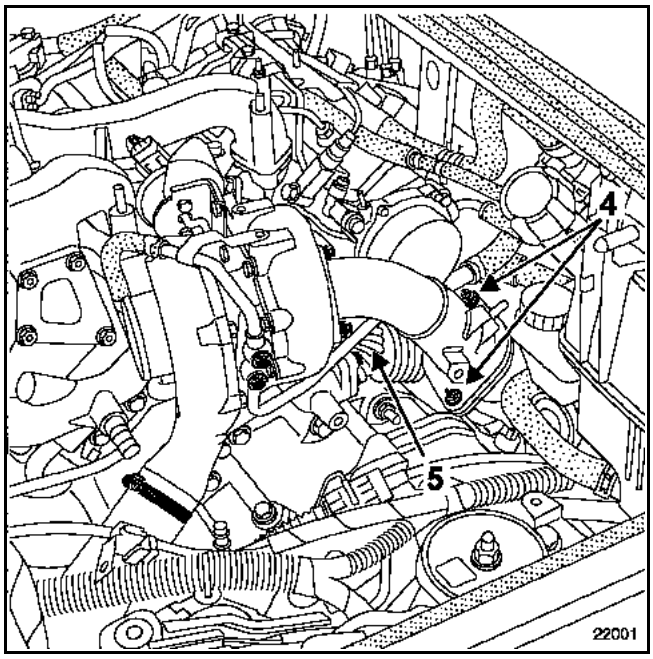

Under the vehicle:

Remove:
– the engine undertray,
– the catalytic converter.

Release the preconverter on the side. To do this, remove the strut (7) and the mounting bracket (8) from the preconverter.

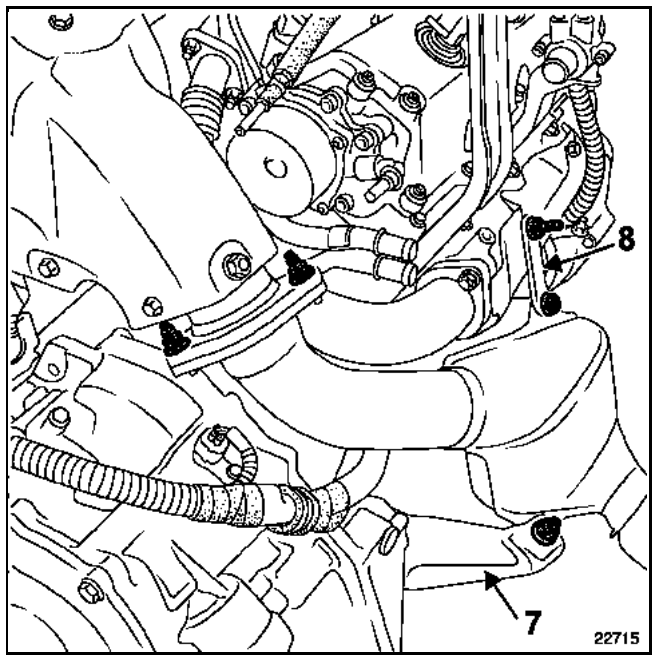

Disconnect the electrical connections to the alternator.

Remove:
– the exhaust manifold heat shield,
– the mountings (9) on the manifold/turbocharger intermediate pipe on the manifold.

Remove the manifold turbocharger intermediate from the top-.

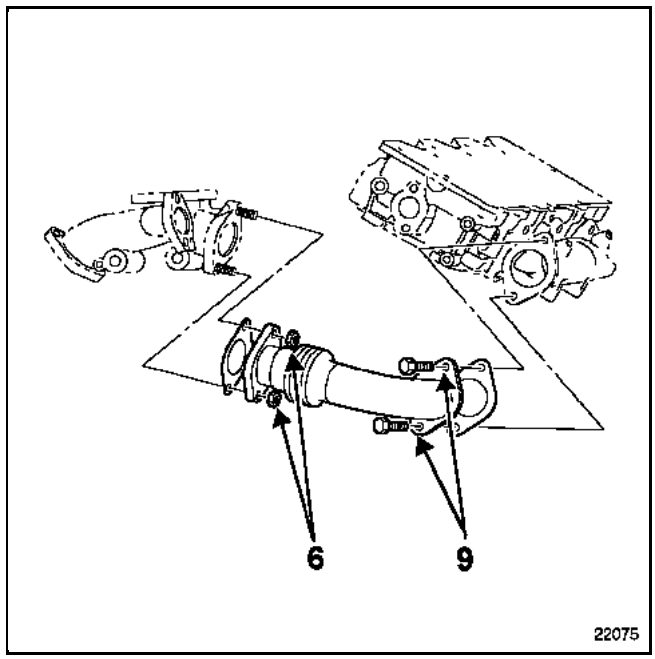

GETtheMANUALS.org

REFITTING

Replace the exhaust seals.

Refit the front manifold/turbocharger intermediate pipe on the workbench then tighten the mountings to the recommended torque.

Refit in the reverse order to removal for the other refitting operations.

Exhaust manifold and intermediate pipes

GETtheMANUALS.org

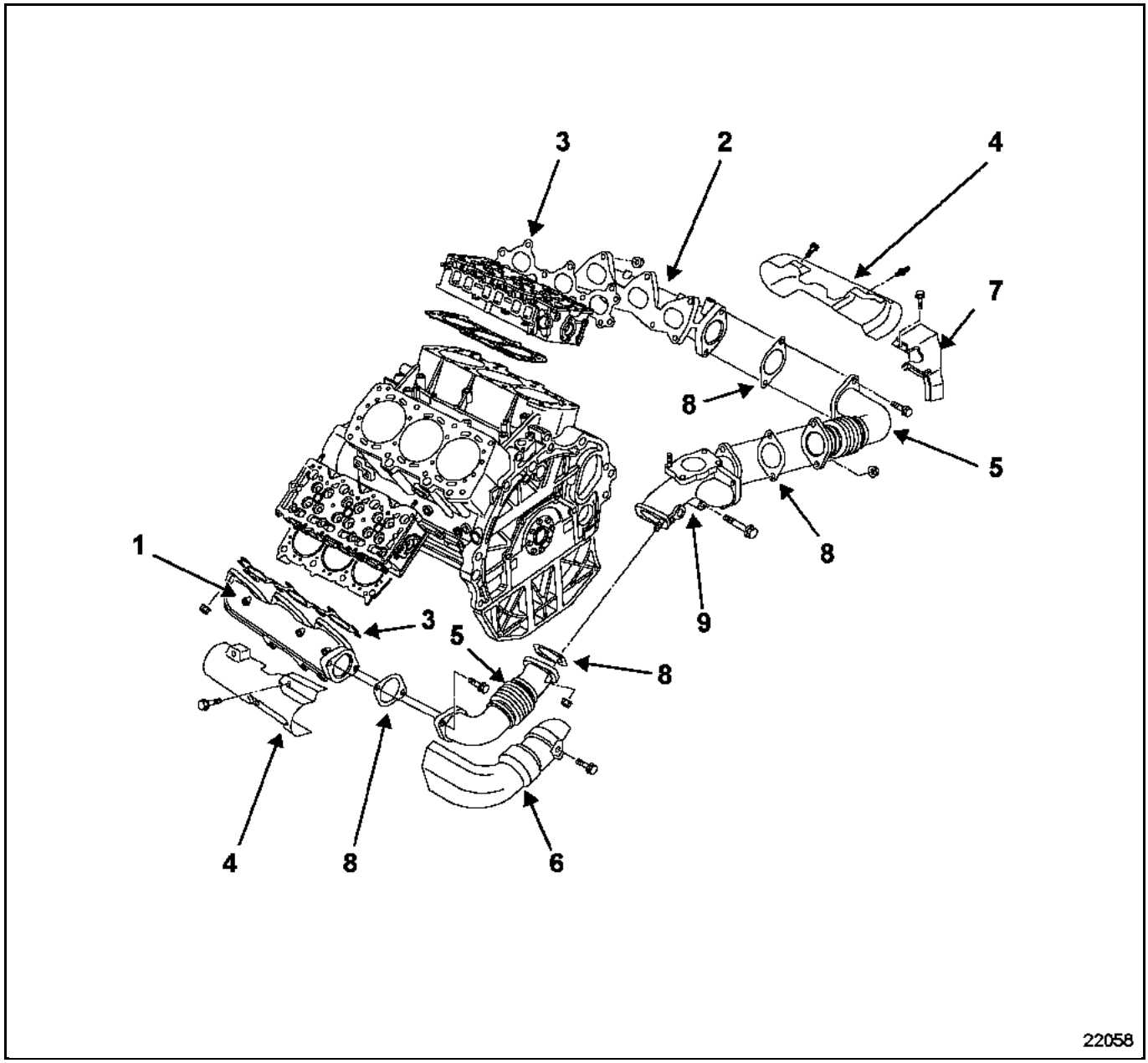

1 Front exhaust manifold
2 Rear exhaust manifold
3 Manifold gasket
4 Exhaust manifold heat shield
5 Manifold/turbocharger intermediate exhaust pipe
6 Front intermediate pipe heat shield
7 Preconverter heat shield
8 Intermediate pipe gasket
9 Turbocharger manifold

Exhaust gas recirculation valve - Exchanger

GETtheMANUALS.org

TIGHTENING TORQUES (in daNm)	
Exhaust gas recirculation pipe mountings	2.1
Exchanger mounting	2.1
Exchanger bracket	2.1
Exhaust gas valve mountings	2.1
Exhaust gas recirculation valve - Exchanger clip	0.6

YOU SHOULD FOLLOW THE CLEANLINESS INSTRUCTIONS CLOSELY

REMOVAL

Put the vehicle on a two-post lift.

Disconnect the battery.

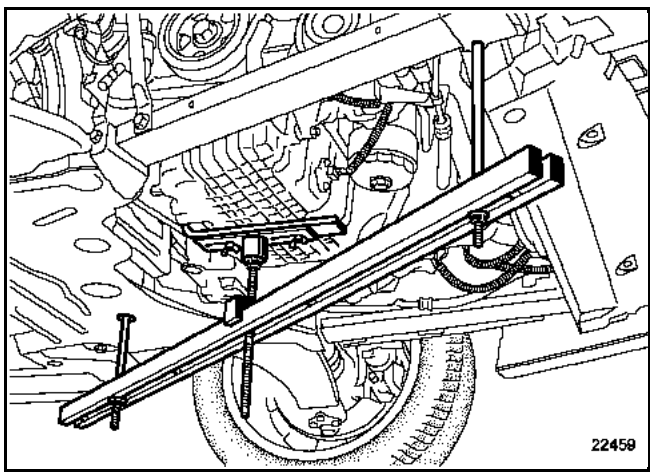

Fit the engine support **Mot. 1367-02**.

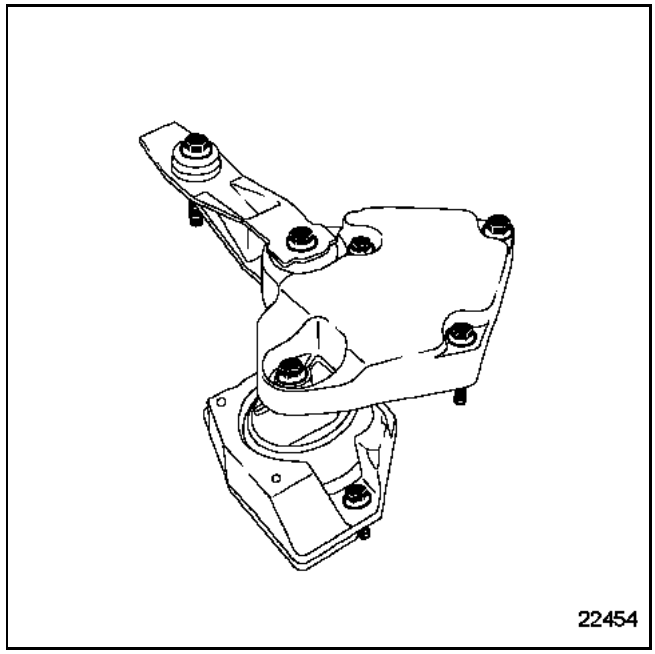

Release the diesel supply ducts on the suspended engine mounting.

Remove the engine suspension mounting-movement limiter assembly.

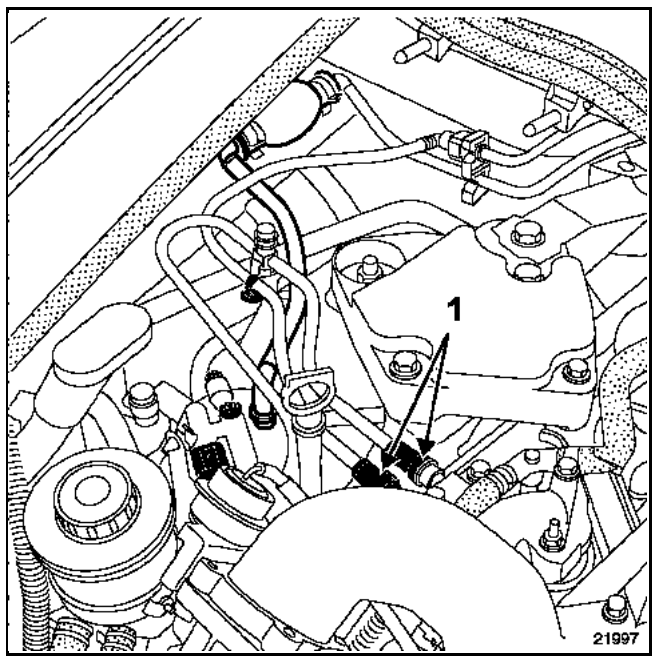

Disconnect the diesel supply and return ducts (1) then block the pipes using the cleanliness plugs kit, available from the Parts Department.

GETtheMANUALS.org

Remove the inlet manifold (see **Inlet manifold** operation).

Disconnect:
– the various connectors and actuators of the wiring harness (1) then release this from the side,
– the oil vapour rebreathing pipes on the union at "T" (2) then the pipe (3). Remove this from the side.

Release the connector (4) then remove the acoustic damper (5).

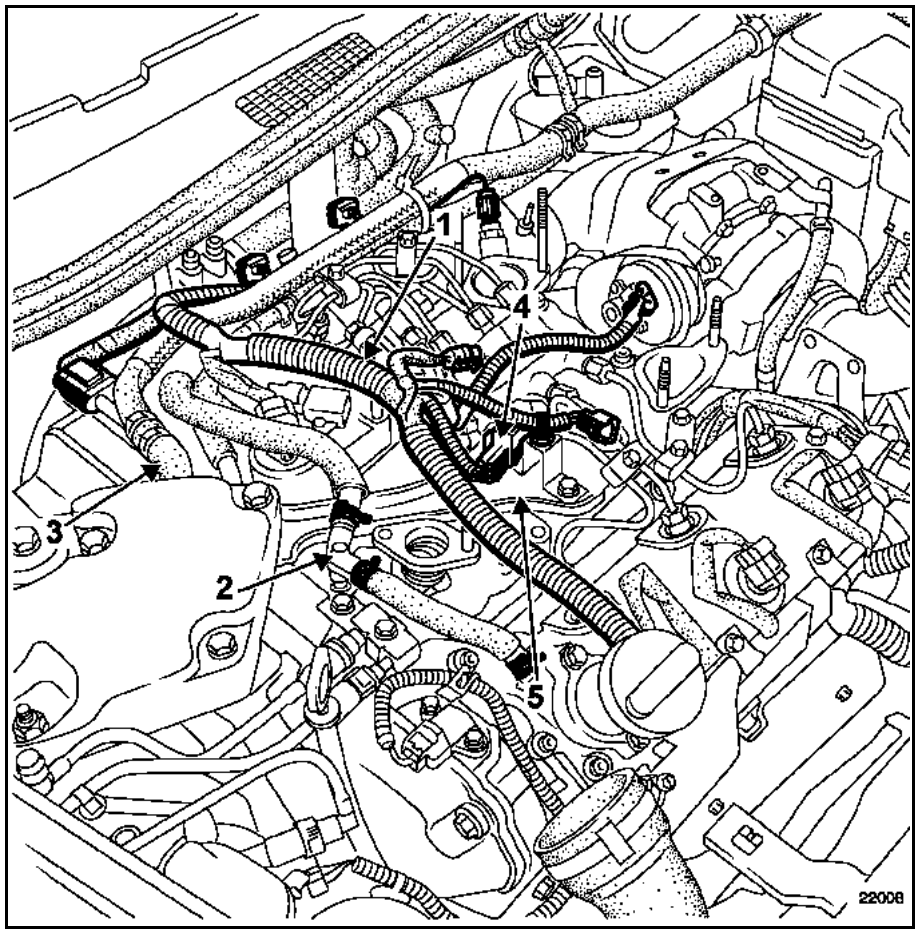

GETtheMANUALS.org

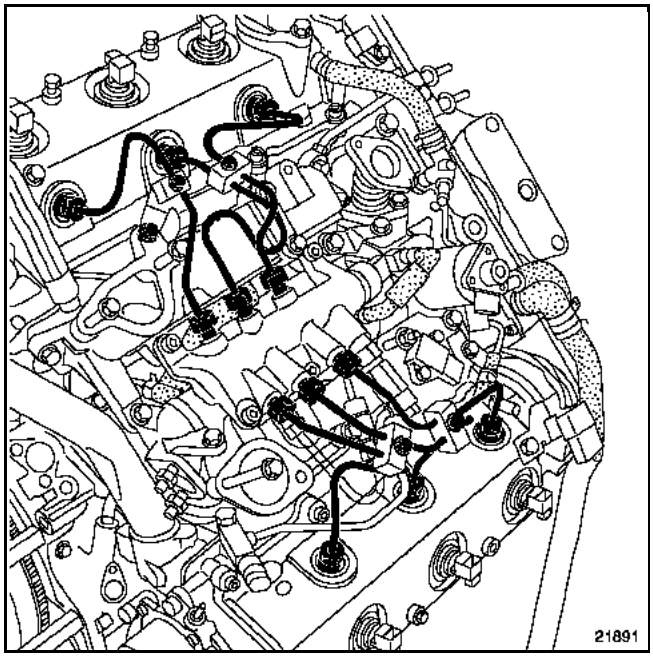

Undo the injector-rail high pressure pipe unions.

If necessary, slacken the retaining brackets on the different pipes.

Remove the high pressure pipes.

Fit plugs to maintain cleanliness.

Remove:
– the two mounting bolts from the wastegate diaphragm then release it on the side,
– the high pressure rail (see relevant operation in Section **13B Diesel injection Injector rail**).
– the exhaust gas recirculation pipes (6).

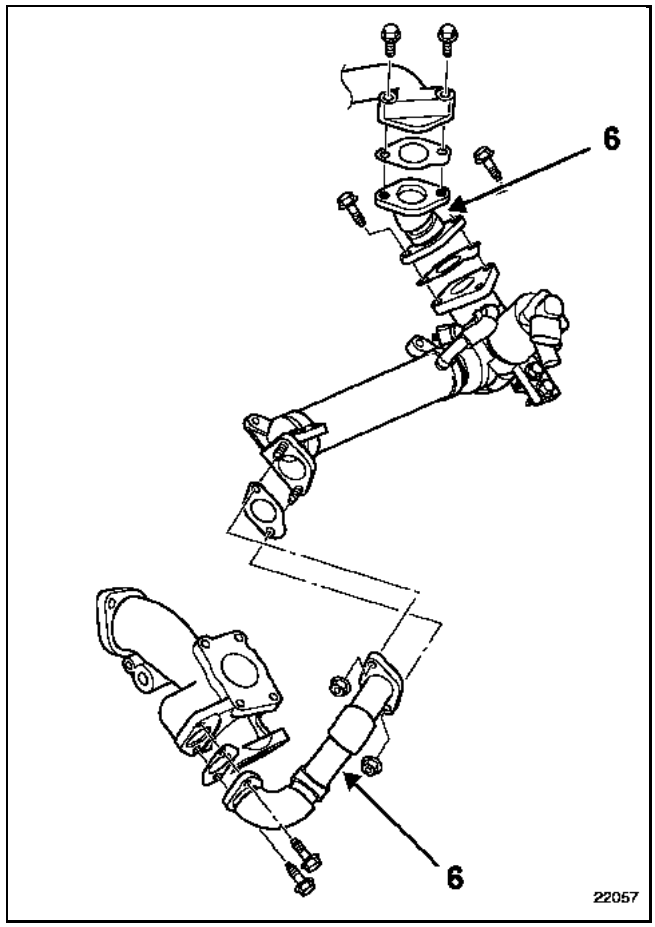

Disconnect the coolant pipe (7) on the exhaust gas recirculation valve.

Remove:
– the exchanger bracket mountings (8),
– the exhaust gas recirculation valve assembly -- exchanger mountings (9) .

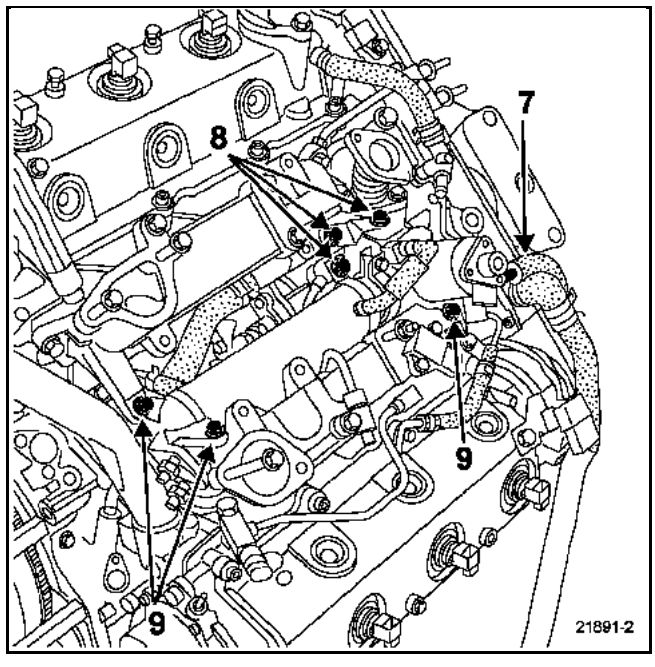

GETtheMANUALS.org

Release the exhaust gas recirculation valve - exchanger assembly mountings then disconnect the two coolant hoses (10).

Place hose clamps on the cooling hoses.

Remove the exhaust gas recirculation valve - exchanger assembly.

On the workbench:

Disconnect the cooling hoses (11).
Slacken the tightening clamp (12).
Remove the exhaust gas recirculation valve (13) from the exchanger (14).

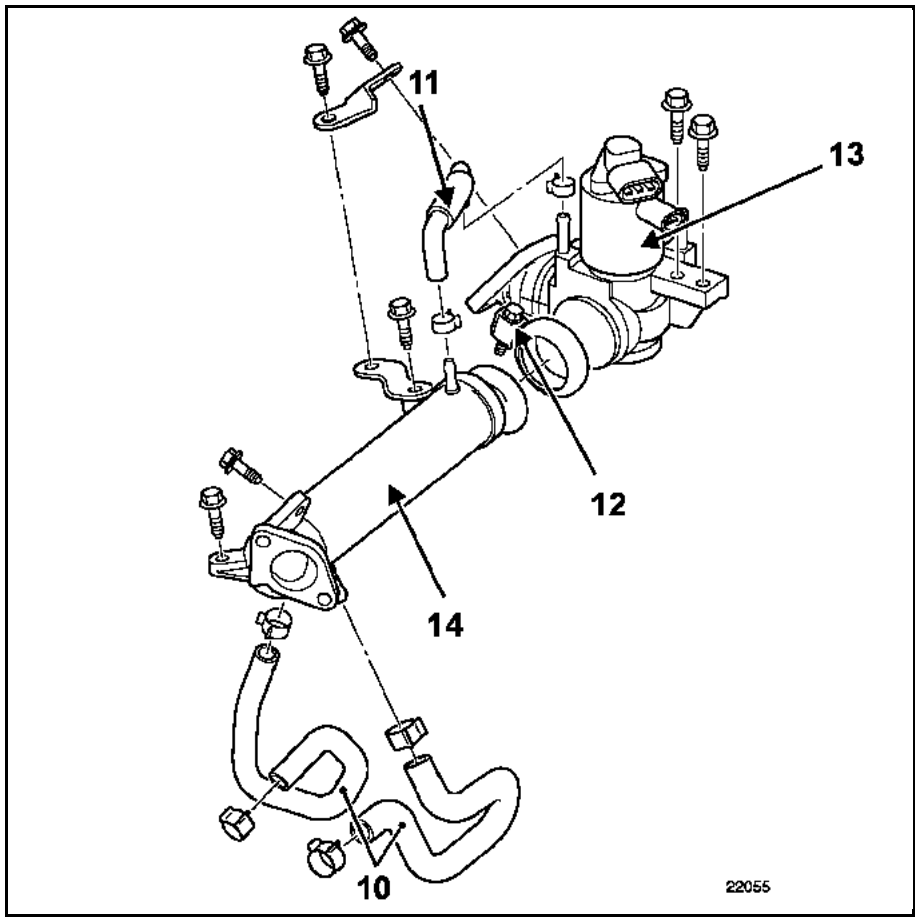

REFITTING

Replace:
– the exhaust gas recirculation pipe seals,
– the exhaust gas recirculation valve - exchanger assembly locking clip.

Refit the high pressure pipes and tighten them to the recommended torque (see relevant operation in Section **13B Diesel injection Replacing high pressure pipes**).

Fill and bleed the cooling circuit (see Section **19A Cooling Filling and bleeding**).

Refit in the reverse order to removal for the other refitting operations.

GETtheMANUALS.org

The diaphragm (A) of the pressure regulation valve is actuated by a solenoid valve (B) which is controlled by the injection computer.

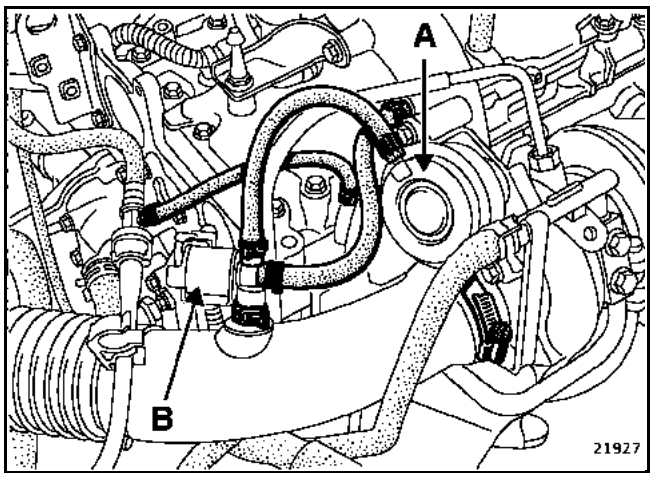

The pressure regulation valve (wastegate) is closed at rest.

The solenoid valve (B) is open in the rest position.

In the open position, the solenoid valve (B) connects the turbocharger outlet (turbocharging pressure) and the diaphragm (A). Consequently, the turbocharging pressure activates the diaphragm directly and the pressure adjustment valve (wastegate) opens.

When the solenoid valve (B) is controlled, the turbocharging pressure signal (taken at the turbocharger outlet) is diverted to the turbocharger inlet. Consequently, the diaphragm is no longer subject to turbocharging pressure and the pressure regulation valve (wastegate) closes.

The solenoid valve is open in the rest position and is supplied as soon as the engine starts. However, there is a delay depending on coolant temperature, during which the turbocharging pressure is limited and engine speed cannot exceed **2500 rpm**. This ensures that the oil has sufficient time to reach the turbocharger bearings.

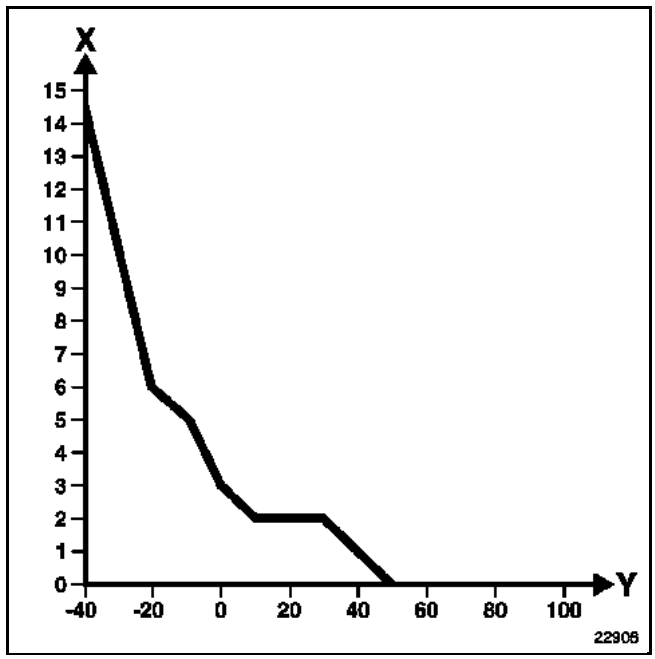

X Time in seconds
Y Temperature in °C

GETtheMANUALS.org

The turbocharger is fitted with an anti-pumping valve (A).

This valve is comprised of a spring and a diaphragm that control a valve to connect the outlet and inlet of the turbocharger via an internal duct.

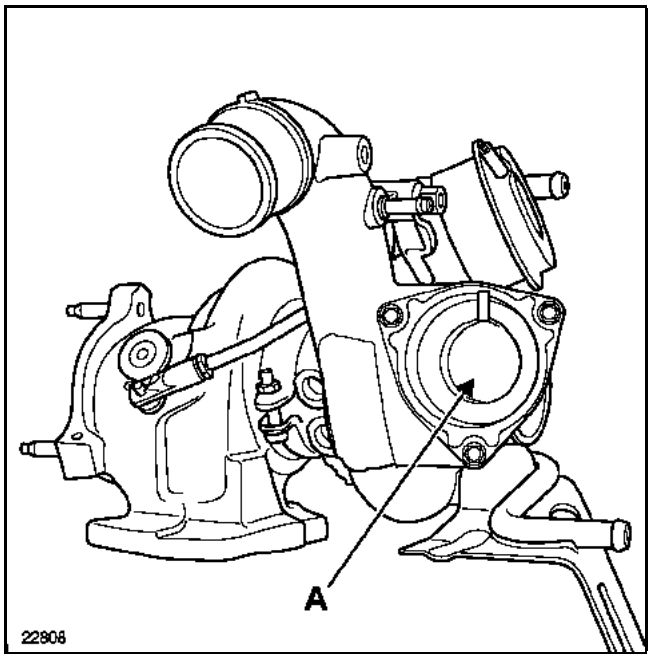

The anti-pumping valve diaphragm (A) is subject to the pressure in the manifold between the throttle body and the inlet valve (inlet manifold vacuum).

When the pressure starts to drop, if the difference between the turbocharging pressure and the inlet manifold vacuum is above **400 mb** the valve will open.

When the valve opens, it causes the pressure between the throttle body and the compressor blades to drop rapidly. This prevents a pumping problem that could destroy the turbocharger when the pressure starts to drop.

GETtheMANUALS.org

The diaphragm (A) of the pressure regulation valve is controlled by a solenoid valve (B) which is managed by the injection computer. This solenoid valve varies the vacuum according to the engine operating range, which enables the turbocharging pressure to be regulated.

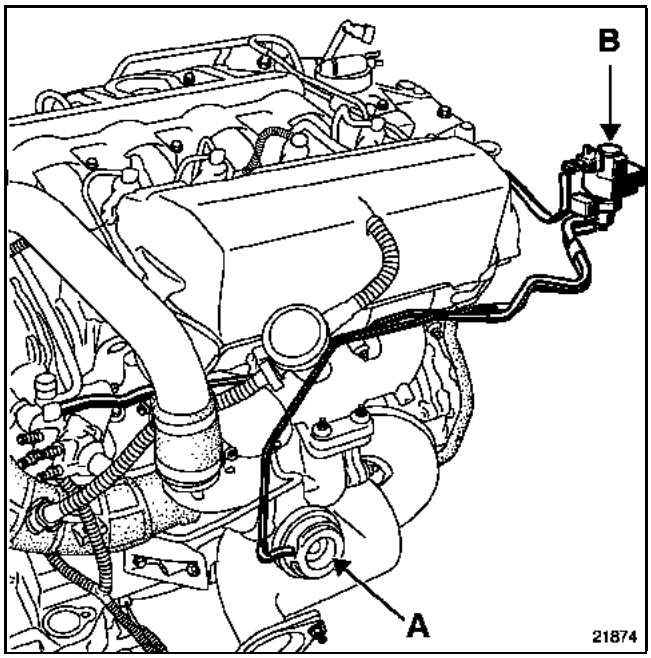

The pressure regulation valve (wastegate) is open in the rest position. The engine is as normally aspirated.

The solenoid valve, closed in the rest position, is energised after the engine is started following a delay dependent on the coolant temperature.

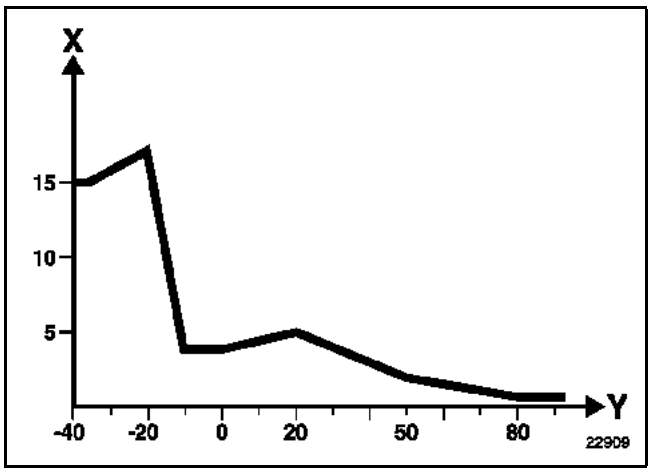

X Time in seconds
Y Temperature in ˚C

GETtheMANUALS.org

TURBOCHARGER PRESSURE CONTROL VALVE (WASTEGATE)

Calibration pressure check

The calibration pressure cannot be checked or adjusted when the turbocharger is in place.

To carry out either of these operations the turbocharger should be removed (see Section **12B Turbocharging Turbocharger**).

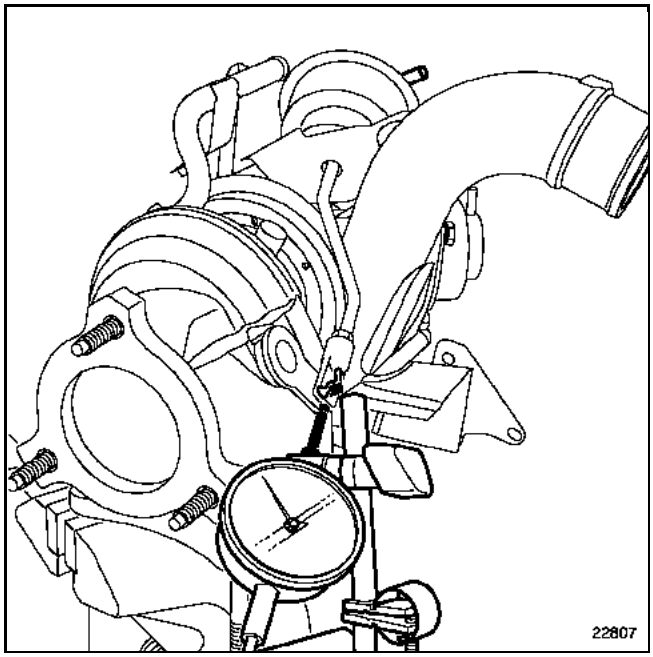

Use a magnetic base fitted with a gauge which should be positioned at the end of the wastegate rod (inserted as close as possible to the centre line of the wastegate).

Gradually increase the pressure to the wastegate using pressure gauge **Mot. 1014**.

Calibration value

Pressure value (mbar)	Rod movement (mm)
290 to 370	1
500 to 580	5

Simulation

When checking the calibration pressure it may be necessary to adjust the wastegate rod length (A) (if it is not within tolerance).

Loosen the lock nut (1).

Remove the pin (2).

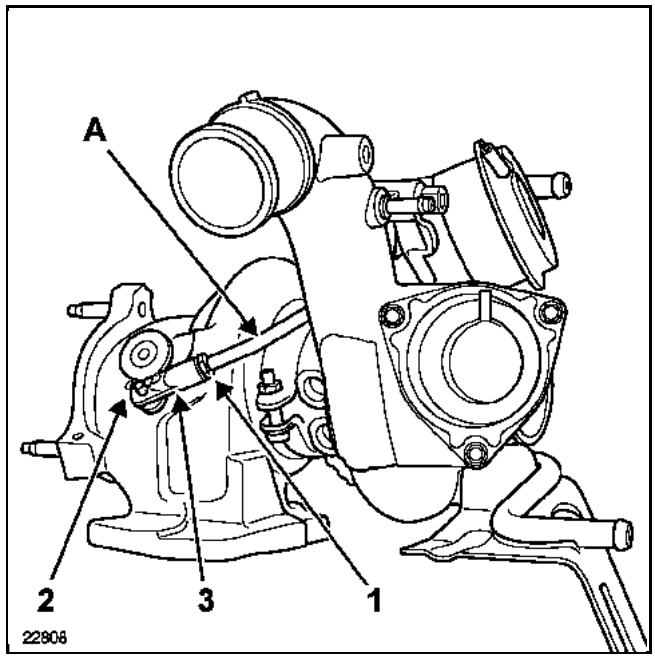

Carry out the adjustment by tightening or loosening the adjusting stop (3) half a turn at a time until the correct calibration pressure is obtained.

Tighten the stop to increase the calibration pressure.

Slacken the stop to reduce the calibration pressure.

NOTE:
Check the calibrating pressure after retightening the locknut (1).

Confirm the repair in a road test, checking the Wastegate opening cyclic ratio and the Turbocharging pressure parameters on the diagnostic tools.

GETtheMANUALS.org

TURBOCHARGER PRESSURE CONTROL VALVE (WASTEGATE)

Calibration pressure check

The calibration pressure cannot be checked or adjusted when the turbocharger is in place.

To carry out either of these operations the turbocharger should be removed (see Section **12B Turbocharging Turbocharger**).

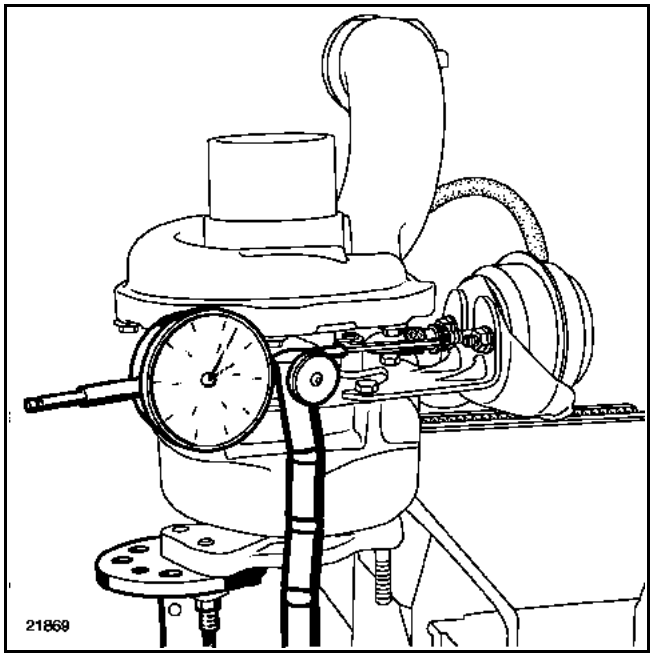

Use a magnetic base fitted with a gauge which should be positioned at the end of the wastegate rod (inserted as close as possible to the centre line of the wastegate).

Gradually increase the vacuum to the wastegate using pressure gauge **Mot. 1014**.

Calibration value

Vacuum value (mbar)	Rod movement (mm)
200	Between 1 and 3
500	Between 10 and 12
>550	Rod at stop

Simulation

When checking the calibration pressure it may be necessary to adjust the wastegate rod length (A) (if it is not within tolerance).

Loosen the lock nut (1).

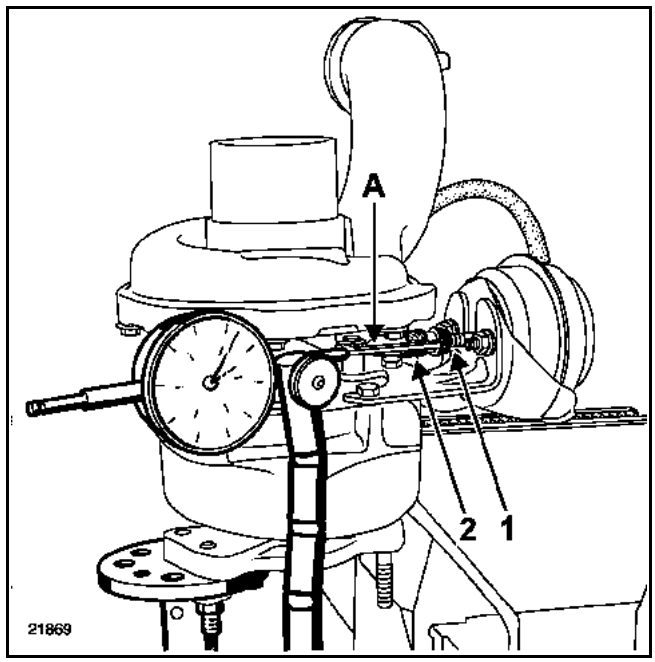

Carry out the adjustment by tightening or slackening the adjustment stop (2) half a turn to attain the correct calibration pressure.

Tighten the wheel to increase the calibration pressure.

Loosen the wheel to reduce the calibration pressure.

NOTE:
Check the calibrating pressure after retightening the locknut (1).

Confirm the repair in a road test, checking the Wastegate opening cyclic ratio and the Turbocharging pressure parameters on the diagnostic tools.

GETtheMANUALS.org

NOTE: like all turbocharged engines, removal and refitting of the turbocharger requires the repair methods to be carefully followed to ensure the system is correctly sealed.
NON-OBSERVANCE OF THIS ADVICE MAY HAVE SERIOUS CONSEQUENCES FOR SAFETY

TIGHTENING TORQUES (in daNm)	
Turbocharger mounting nut	1 + 90°
Oil supply union	2.5
Oil supply end piece on the turbocharger	3.2
Oil supply pipe bolt	4
Oil return pipe bolt	0.8
Cooling duct bolt	1.2 + 2.7
Exchanger/turbocharger clamp	0.55

REMOVAL

NOTE:
To loosen the turbocharger mounting nuts on the exhaust manifold, it helps to spray some unlocking fluid onto the nuts while they are still warm, just before removal.

Remove the catalytic converter (see Section **19B Exhaust: Catalytic converter**).

Disconnect the battery.

Disconnect:
– the wastegate control solenoid valve pipe (1),
– the solenoid valve/turbocharger pipe(2),
– the brake servo pipe (3).

Remove the air filter/turbocharger pipe (4).

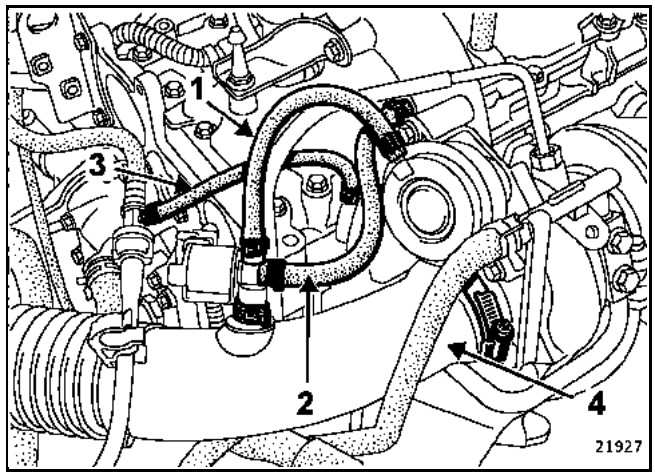

Fit hose clamps and remove the cooling hoses from the turbocharger (5).

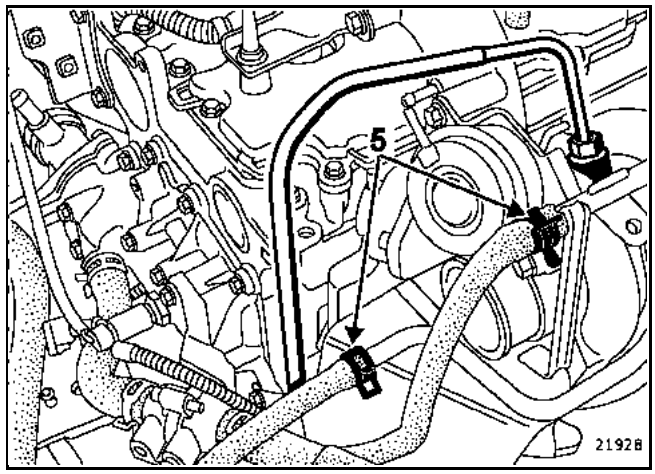

GETtheMANUALS.org

Remove:
– the thermoplunger unit bolt,
– the heat shield bolt (6),
– the two cooling duct bolts,
– the turbocharger oil supply pipe (7),
– the engine cover mounting and the turbocharger strut (8),
– the air exchanger/turbocharger pipe,

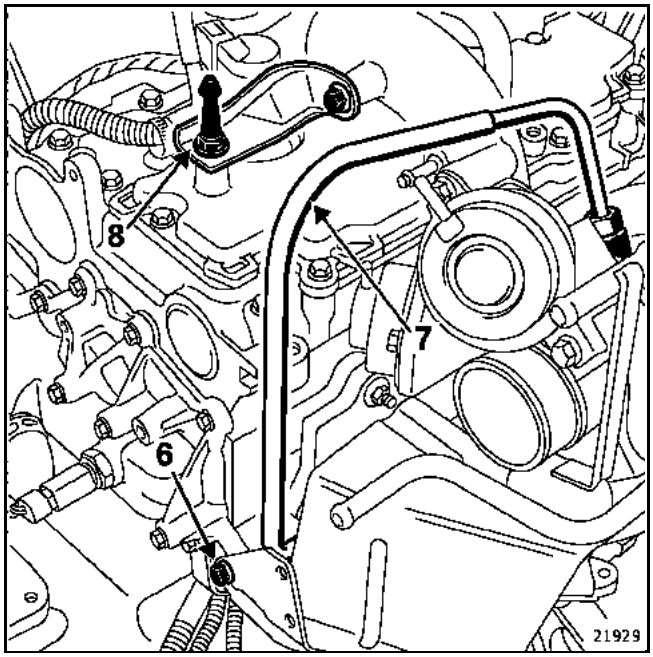

– the starter heat shield,

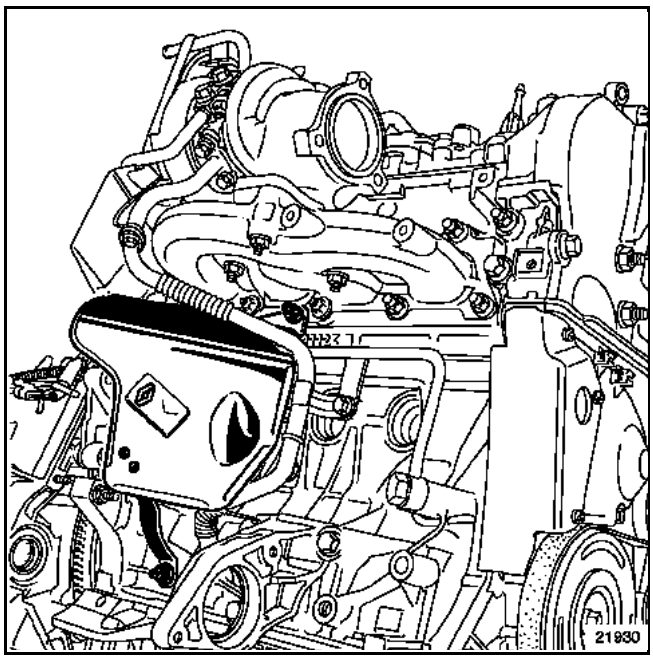

Remove:
– the three mountings (9) from the turbocharger oil return pipe,
– the turbocharger oil return pipe (11),
– the turbocharger oil supply pipe (10),

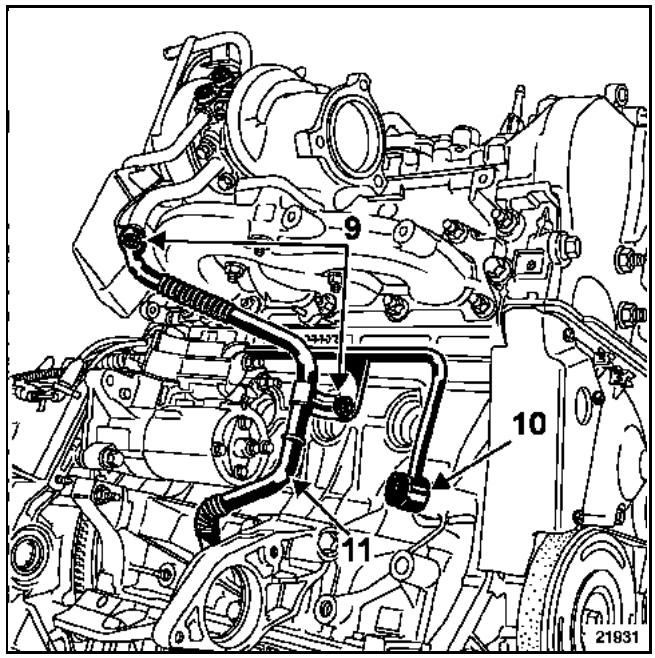

– the four nuts (12) securing the turbocharger to the manifold,

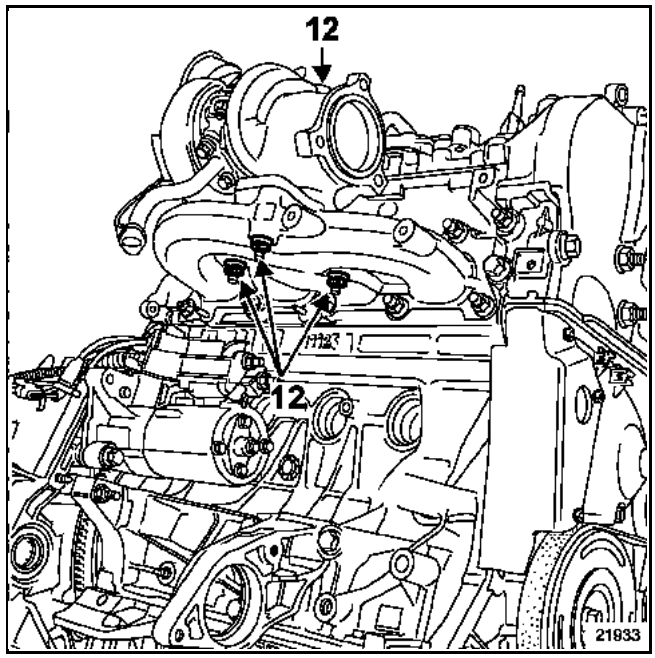

– the turbocharger from above.

GETtheMANUALS.org

REFITTING

It is essential to replace the studs and the mounting nuts on the turbocharger as well as the seals.

Refit the following on the workbench and tighten to torque:
– the two bolts (13) on the oil return pipe towards the cylinder block to **1.2 daNm**,
– the bolt (14) on the oil return pipe,
– the two bolts (15) on the turbocharger cooling pipe to **1.2 daNm**, then to **2.7 daNm**.

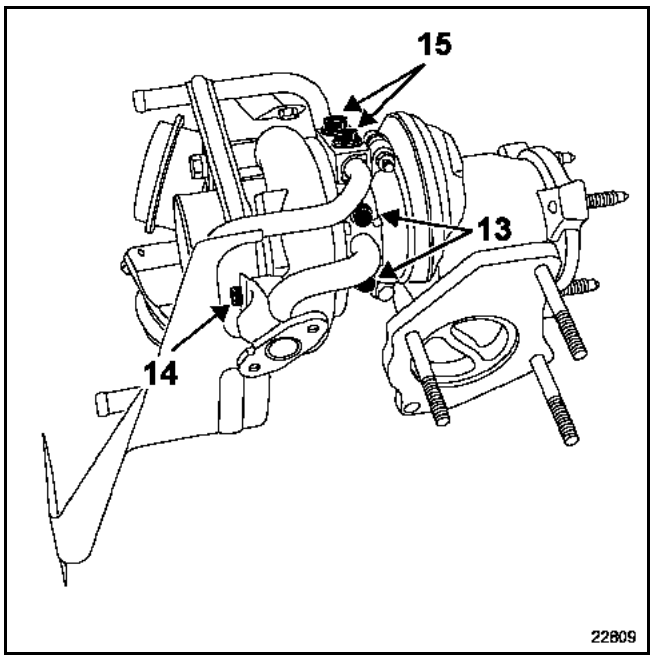

Position and insert the mounting bolts of the following parts:
– the turbocharger on the exhaust manifold,
– the oil supply pipe on the turbocharger,
– the return pipe to the cylinder block,
– the air exchanger/turbocharger pipe,
– the turbocharger strut.

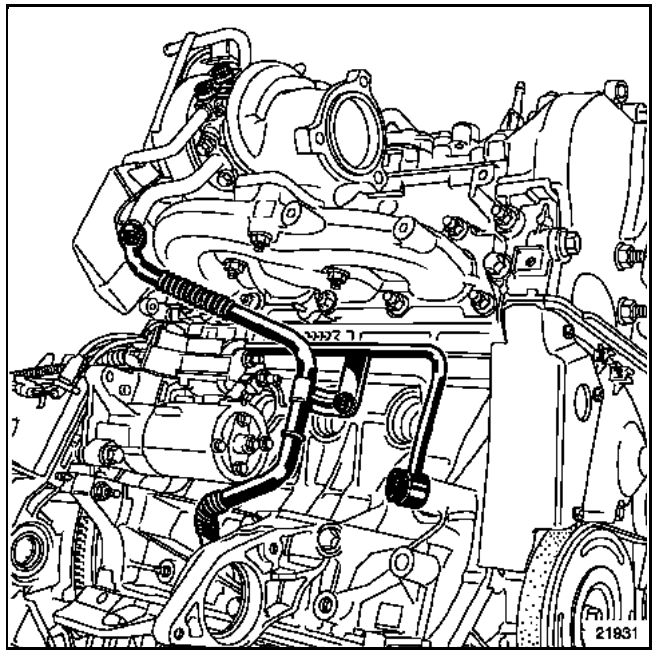

Tighten the clamp (16) on the exchanger/turbocharger air pipe to position the turbocharger and the turbocharger strut (17).

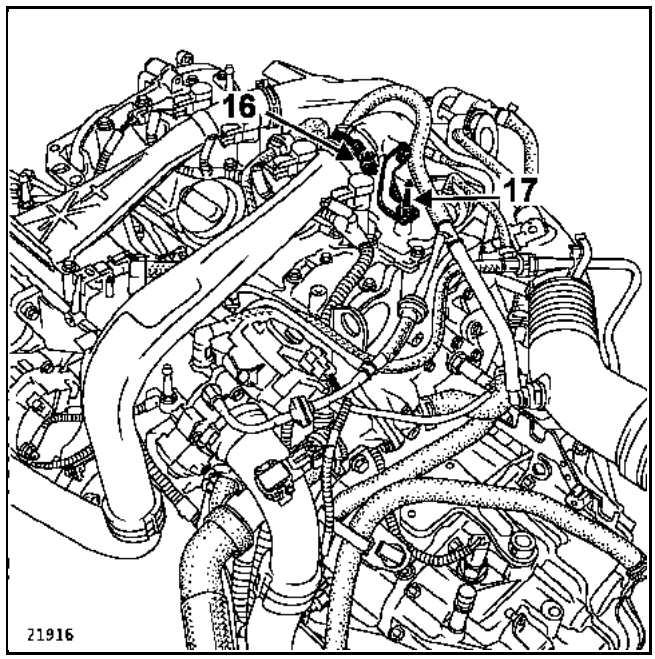

GETtheMANUALS.org

Tighten the four turbocharger nuts to a torque of **1 daNm** then angle tighten by **90°**.

Tighten the oil supply and return pipes observing the tightening torques.

Refit the other components in the reverse order to removal.

NOTE:
When refitting, check that the heat shield air pipe and exchanger - turbocharger air pipe are not in contact with the ignition coils.

IMPORTANT:
It is vital to replace all the gaskets that have been removed including those on the cooling pipe.

IMPORTANT:

Before starting the engine, connect the diagnostic tool and lock the injection system.

Then run the starter motor until the oil pressure warning light goes out (persist for a few seconds) then lock the injection system.

Start the engine then accelerate with no load several times.

Switch off the ignition and check that there has been no oil leak.

Run the engine at idle speed until the fan starts up.

Accelerate several times with no load then perform a road test.

Switch off the ignition and check that there has been no oil leak.

Special precautions

- Ensure that no foreign bodies enter the turbine or compressor during the refitting operation.
- If there has been a fault in the turbocharger, check that the air-to-air intercooler is not full of oil. If the air-to-air intercooler is full of oil, it must be removed, flushed with a cleaning agent and then left to drain properly.
- Check that the turbocharger oil return pipe is not partially or completely blocked by scale. Also check that it is perfectly sealed. If not, replace it.

GETtheMANUALS.org

TIGHTENING TORQUES (in daNm)	
Turbocharger mounting nuts	**2.6**
The oil supply pipe bolt on the turbocharger	**1.5**
Oil supply pipe union	**2.2**
Oil supply union on the engine block	**4.2**
Oil return pipe bolt	**0.9**

REMOVAL

NOTE:
To remove the turbocharger the catalytic converter, the injection rail and the rail protector (see Section **19B Exhaust Catalytic converter**, Section **13B Diesel Injection Injector rail** and **Rail protector**).

NOTE:
Use an oil supply pipe and specific After-Sales turbocharger seals on the plenum chamber and catalytic converter sides available in the Parts Stores.

Put the vehicle on a two-post lift.

Disconnect the battery.

Remove:
– the front right-hand wheel,
– the engine undertray,
– the air intake (1) and outlet (2) sleeves connected to the turbocharger,
– the turbocharger outlet metal tube (3).

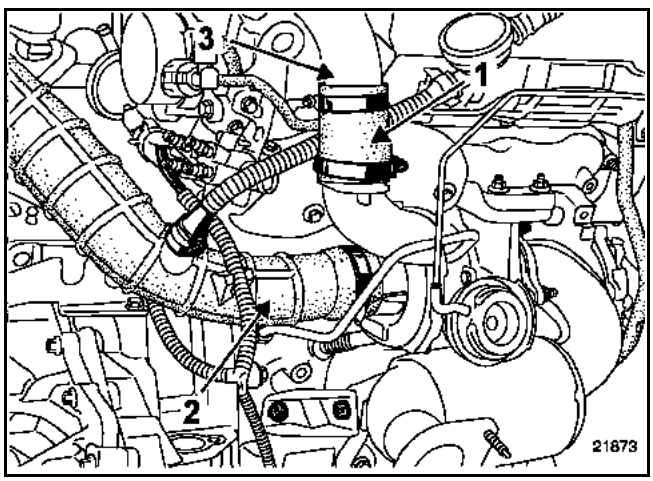

Remove the oil return pipe (4) from the turbocharger.

Unscrew the turbocharger oil supply pipe union (5) on the engine.

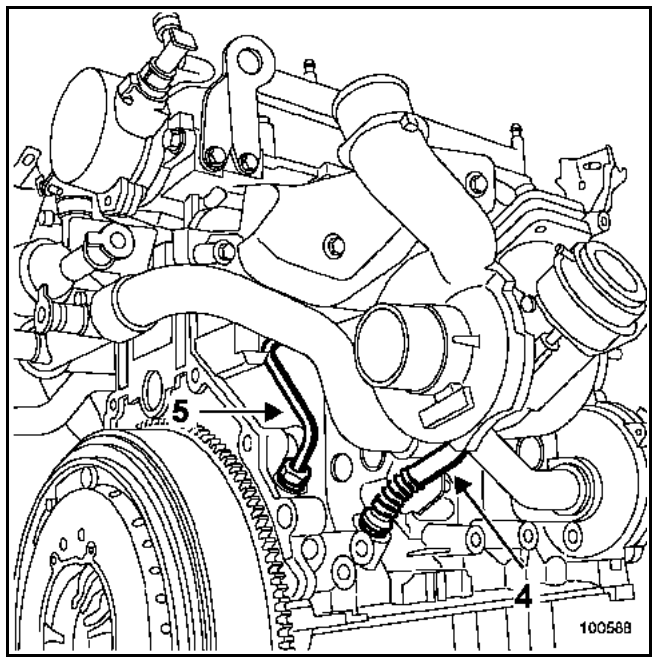

From above:

Remove the two turbocharger mounting nuts (6) on the exhaust manifold.

Slacken the nut (7) without removing it.

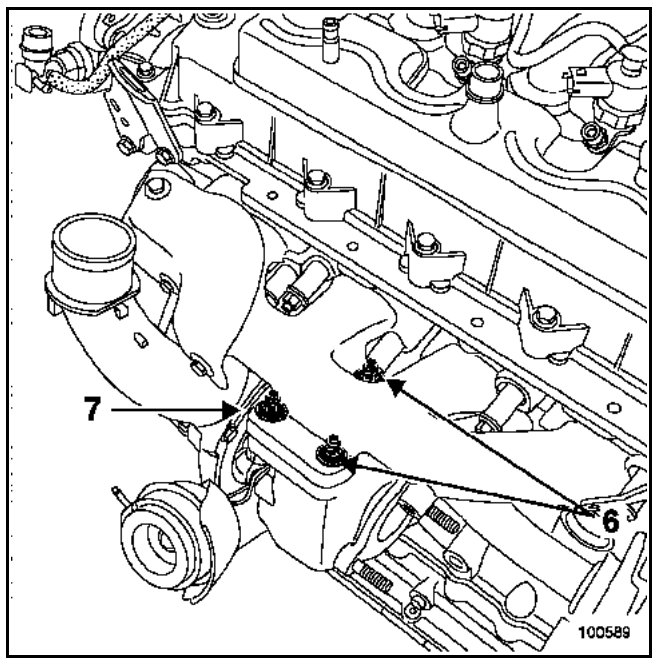

GETtheMANUALS.org

From below:

IMPORTANT:
It is not possible to remove the oil supply pipe with the turbocharger in place.
To remove the turbocharger, pressure needs to be applied to the oil supply pipe.
Use a new pipe, specific to After-Sales, available at Parts Stores.

Remove nut (7).

Release the turbocharger from its studs.

Rotate it, then press the pipe to release the assembly.

Unscrew the pipe union on the turbocharger.

Remove the pipe then release the turbocharger.

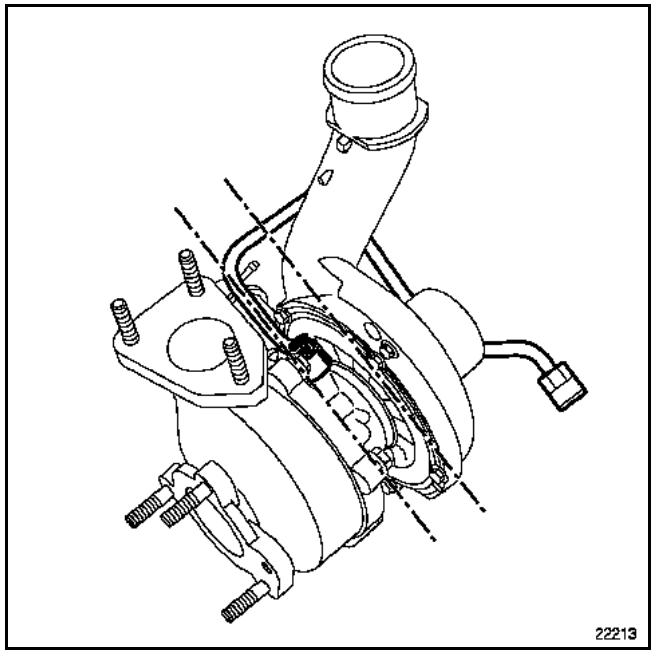

REFITTING

IMPORTANT:
It is essential to replace the leather seals on the turbocharger oil inlet union and the oil return pipe seal.

Tighten the new supply union and its leather seal on the engine block at a torque of **4.2 daNm**.

Special notes
It is necessary to refit the turbocharger oil supply pipe before fitting the turbocharger to the vehicle. To do this, position the oil supply pipe perpendicular to the turbocharger turbine axis (see diagram) then tighten to a torque of **1.5 daNm**.

IMPORTANT:
In After-Sales, it is essential to fit the turbocharger plenum chamber side and catalytic converter side seals.

Refit the turbocharger making sure that it supports the plenum chamber and position the oil supply pipe in the cylinder block.

Fit the turbocharger mounting nut (7) on the manifold on the underside of the vehicle above the two other nuts (6).

Tighten the new oil supply pipe with its seal on the engine block union to a torque of **2.2 daNm**.

To refit the rail protector and injector rail, make **8** diameter **100 mm** length studs in order to centre the assembly.

GETtheMANUALS.org

Special precautions

- Before refitting, check that the turbocharger bearings are correctly greased. To do this, operate the starter motor while already having disconnected the fuel high-pressure regulator (position a container under it). The oil should flow through the oil pressure pipes.
- Ensure that no foreign bodies enter the turbine or compressor during the refitting operation.
- If there has been a fault in the turbocharger, check that the air-to-air intercooler is not full of oil. If the air-to-air intercooler is full of oil, it must be removed, flushed with a cleaning agent and then left to drain properly.
- Check that the turbocharger oil return pipe is not partially or completely blocked by scale. Also check that it is perfectly sealed. If not, replace it.

When performing the other operations, proceed in the reverse order to removal making sure you observe the order of fitting and the recommend tightening torques on the high-pressure injector part (see Section **13B Diesel injection Rail protector** and **Injector rail**)

IMPORTANT:

- Before starting the engine, leave the pressure regulator connector on the high pressure pump disconnected.
- Then run the starter motor until the oil pressure warning light goes out (do this for a few seconds).
- Reconnect the regulator, preheat and start the engine.
- Run the engine at idle speed and check that there are no leaks at the oil connections.
- Clear the stored fault on the injection computer using the diagnostic tool.

GETtheMANUALS.org

TIGHTENING TORQUES (in daNm)	
Heat shield mountings	2.1
Manifold/turbocharger intermediate pipe mountings	5.2
Turbocharger manifold mounting on the cylinder block	9.6
Exhaust downpipe mounting:	
– on the turbocharger	2.1
– on the preconverter	2.1
Turbocharger bearing cooling pipe unions on the turbocharger	3.4
Turbocharger bearing cooling pipe on the cylinder block	1
Turbocharger bearing oil inlet pipe on the cylinder block	2.4
Turbocharger bearing oil return pipe on the cylinder block	2.1
Turbocharger bearing oil inlet pipe on the turbocharger	0.9
Turbocharger bearing oil return pipe on the turbocharger	1.2
Turbocharger mounting on the turbocharger manifold	2.1

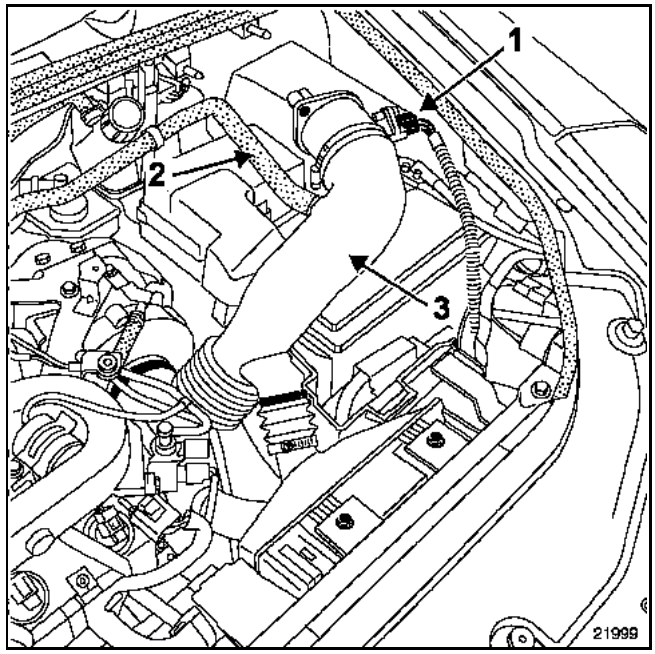

REMOVAL

Put the vehicle on a two-post lift.

Remove:
– the engine covers,
– the engine undertray.

Disconnect:
– the battery,
– the air flowmeter connector (1)

Disconnect the oil vapour rebreathing pipe (2).

Remove the air inlet duct (3) complete with the flowmeter. To do this, remove:
– the two mounting bolts on the air flowmeter,
– the clip on the air resonator and then on the turbocharger.

Unclip then remove the relay unit from the side.

GETtheMANUALS.org

Remove the injection computer (4) (see relevant operation in Section **13B Diesel injection Computer**).

Release the electrical harness (5) from the plastic mountings of the computer.

Remove the computer mounting (6).

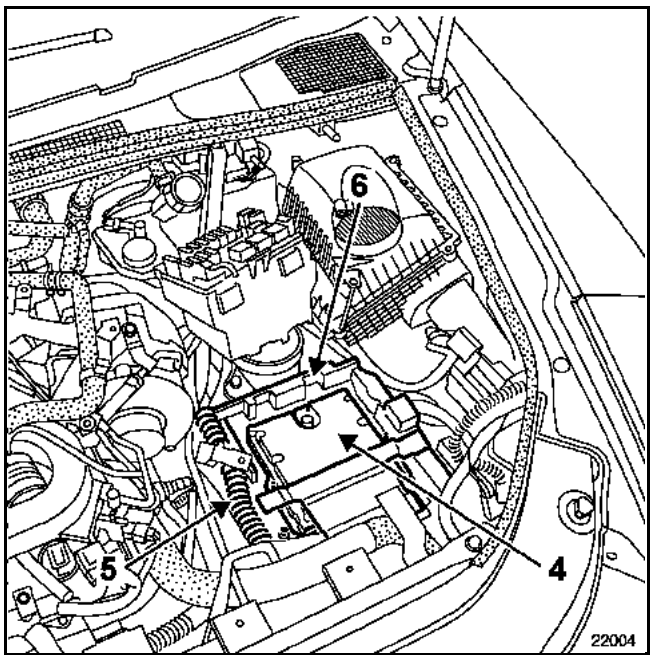

Disconnect the wastegate position sensor.

Remove:
– the mountings (7) from the heat shield on the turbocharger,
– the mountings (8),
– the turbocharger mounting. To do this, disconnect the various air hoses,
– the heat shield,

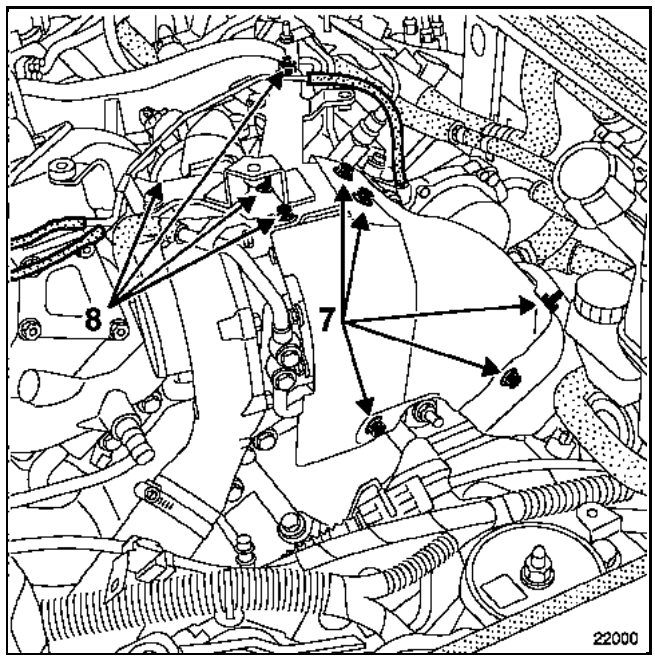

– the preconverter heat shield mounting (9),
– the heat shield,

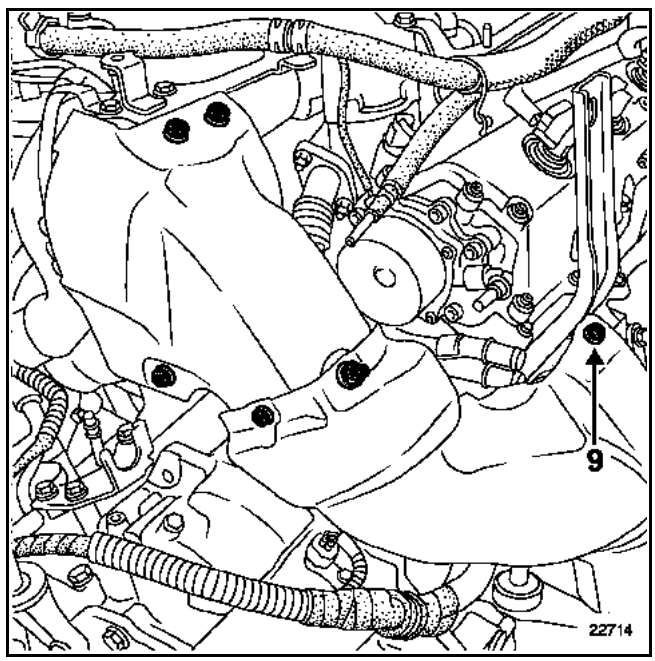

GETtheMANUALS.org

Remove the exhaust gas recirculation pipe (10).

Disconnect the outlet turbocharging air duct (11) from the turbocharger.

Remove:
– the exhaust downpipe mountings (12) on the preconverter then on the turbocharger,

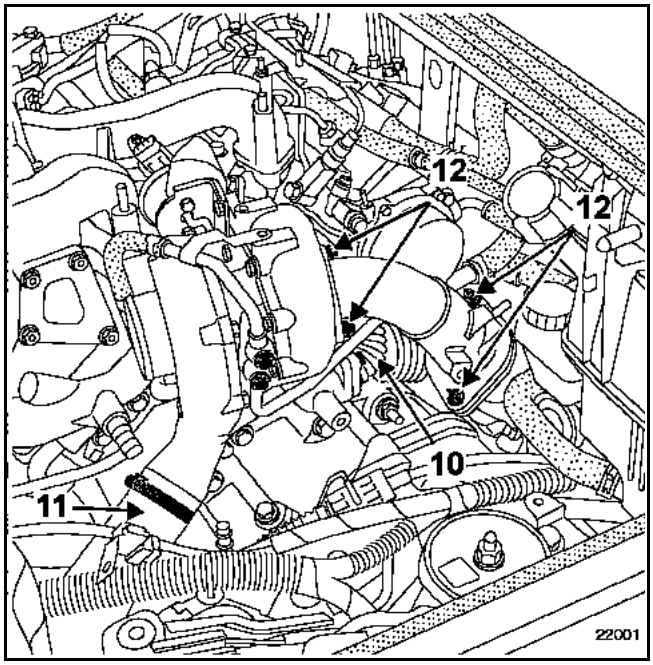

– the heat shield on the front bank manifold-turbocharger intermediate exhaust pipe.

Remove the mountings:
– (13) from the front manifold/turbocharger intermediate pip on the manifold,

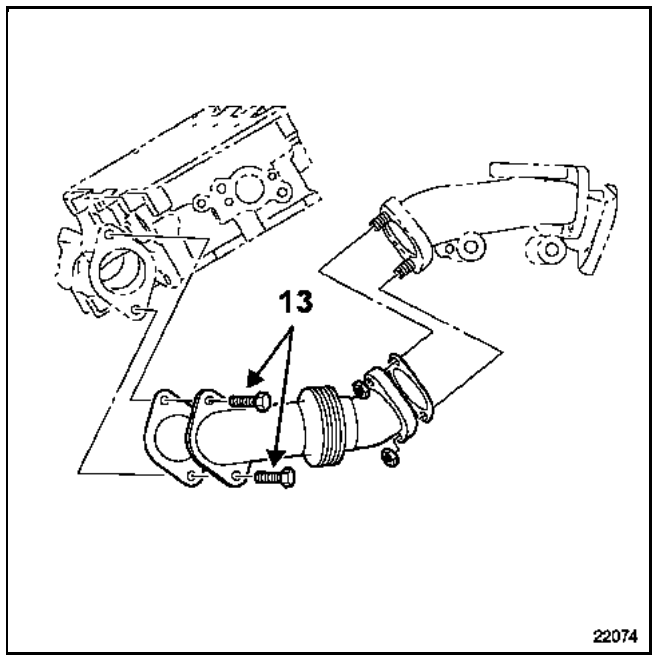

– (14) from the rear manifold/turbocharger intermediate pipe on the turbocharger.

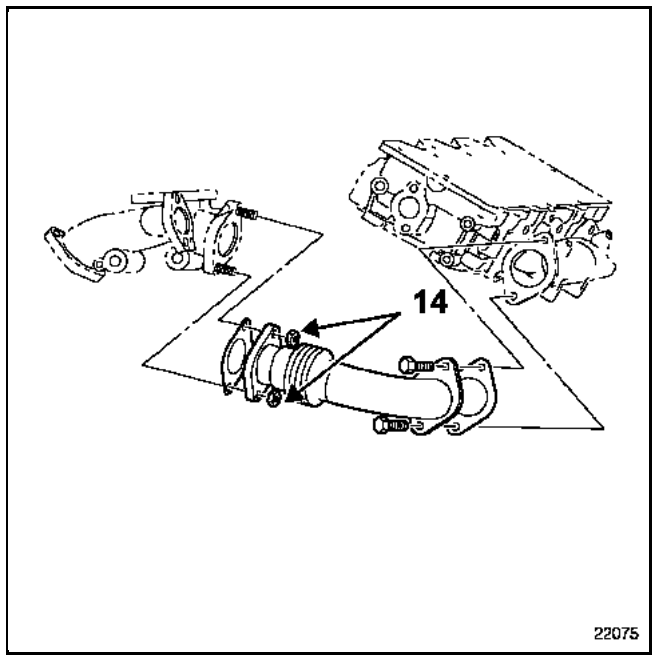

GETtheMANUALS.org

Remove the turbocharger bearing cooling pipe on the side (15).

To do this:
– first fit a hose clamp,
– remove the union (16).

Remove:
– the turbocharger bearing cooling pipe (17). To do this, remove the union (18) and the mounting bolt (19),

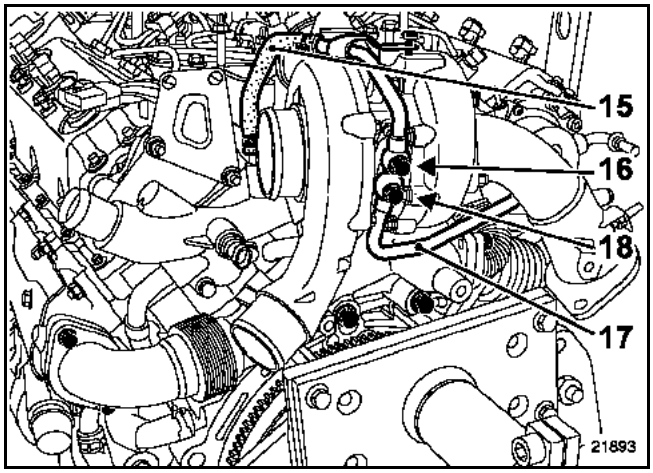

– the mounting bolts (20) from the turbocharger oil supply and return pipes,

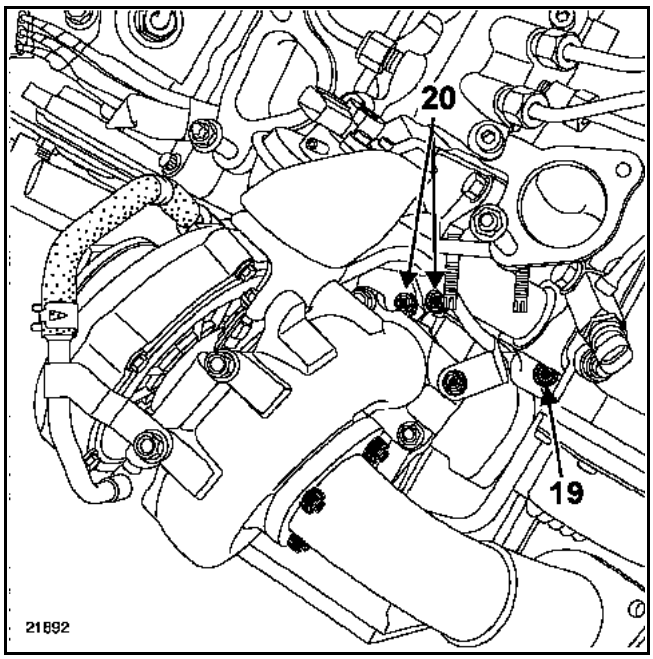

– the turbocharger manifold mounting bolts (21) on the cylinder block.

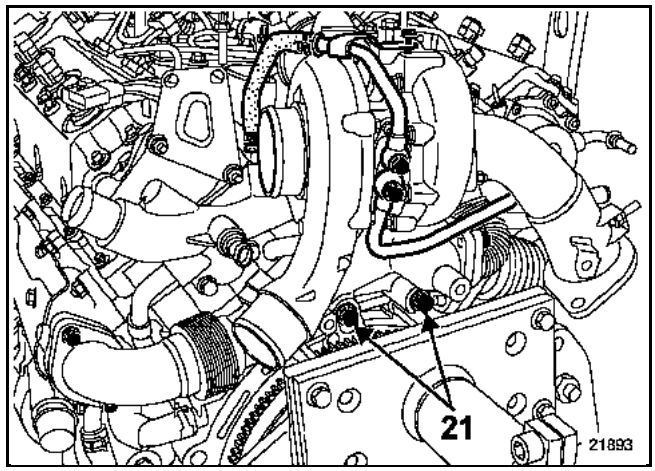

Release the turbocharger, then the exhaust downpipe.

On the workbench:

Remove:
– the front manifold/turbocharger intermediate exhaust pipe,
– the turbocharger oil supply and return pipes,
– the cooling pipe bracket,
– the turbocharger from the turbocharger manifold.

GETtheMANUALS.org

REFITTING

WARNING: BEFORE REFITTING THE TURBOCHARGER, IT IS ESSENTIAL TO LUBRICATE THE TURBOCHARGER BEARING WITH ENGINE OIL

Special precautions

- Ensure that no foreign bodies enter the turbine or compressor during the refitting operation.
- Check that the turbocharger oil return pipe is not partially or completely blocked by scale. Also check that it is perfectly sealed. If not, replace it.

NOTE:
All the seals must be replaced:
– on the exhaust pipes,
– on the turbocharger,
– on the turbocharger oil pipes,
– on the turbocharger bearing cooling pipes,
– on the cooling pipe bracket.

Refit the manifold/turbocharger intermediate pipe to the turbocharger then tighten to the recommended torque.

The remaining refitting operations are performed in the reverse order to removal.

Tighten all the mountings to the recommended torques.

Fill and bleed the cooling system, (see Section **19A Cooling Filling and Bleeding**).

IMPORTANT:
Before starting the engine, connect the diagnostic tool then disable the injection using the command **A614 Canceling injection** located in **Command modes/actuators**.
Then run the starter motor until the oil pressure warning light goes out (do this for a few seconds).
Switch off the engine for about **15 seconds** then restart it.
Run the engine at idle speed and check that there are no leaks at the oil connections.

GETtheMANUALS.org

TIGHTENING TORQUES (in daNm)

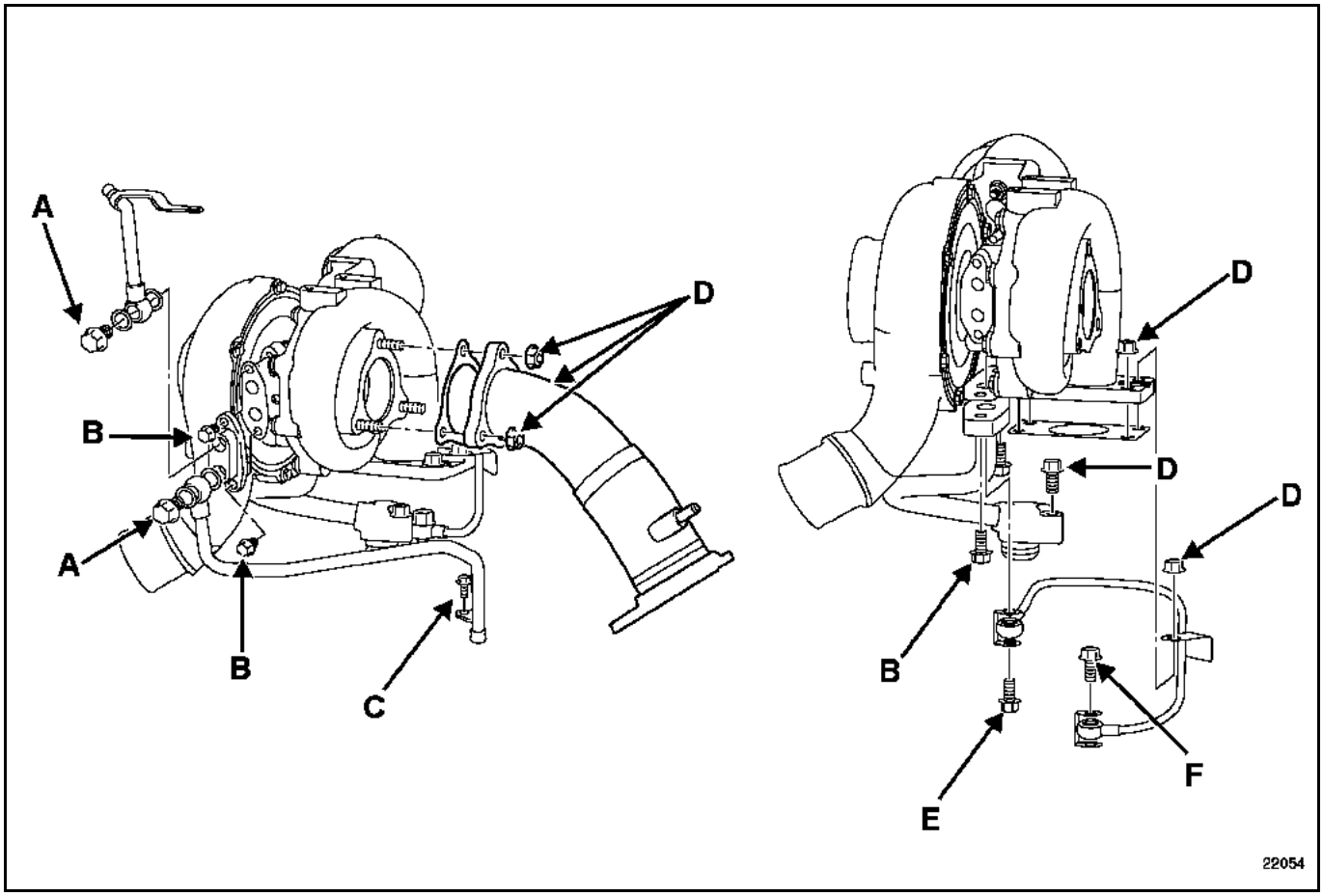

A	3.4
B	0.9
C	1.0
D	2.1
E	1.2
F	2.4

GETtheMANUALS.org

REMOVAL

NOTE:
When removing the air to air intercooler the front bumper and headlights must also be removed (see Section **55A External protection Front bumper** and Section **80B Headlights Removal and Refitting**.

Put the vehicle on a two-post lift.

Disconnect:
– the battery,
– the connector (1).

Unclip the bonnet opening cable (2).

Remove:
– the spoilers (3),
– the nine mounting bolts (4) from the upper cross member.

Fit the upper cross member taking care not to damage the paintwork.

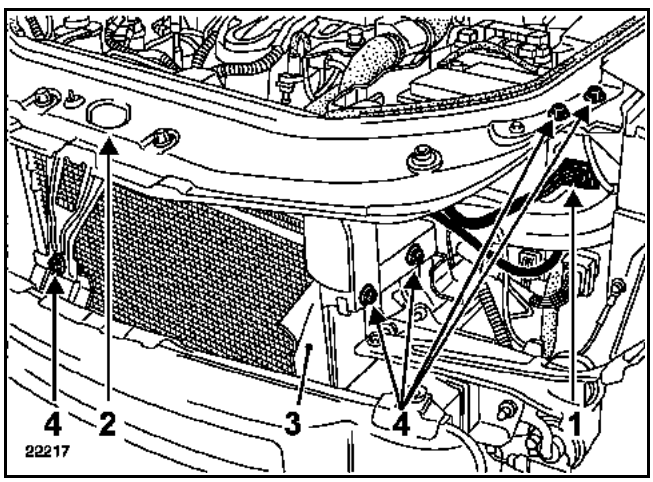

Disconnect the connector (5) from the coolant pressure sensor.

F4R and G9T engines

Remove:
– the mounting bolts (6) from the power steering pipe,
– the two condenser mounting clips (7).

Separate the condenser from the air-to-air intercooler by releasing it upwards. Leave the condenser on the ground.

NOTE:
Take care not to damage the blades.

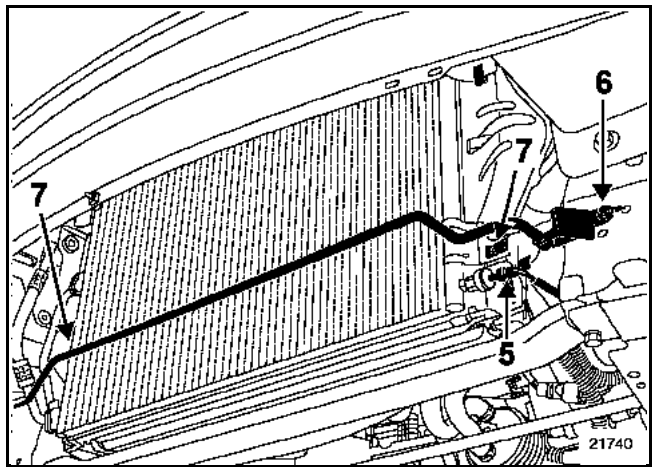

P9X engine

Remove:
– the two mounting bolts (8) from the support bar of the air-oil exchanger,
– the clamp (9) from the power assisted steering pipe,
– the two condenser mounting clips (10).

Free the rigid condenser pipes from the clips.

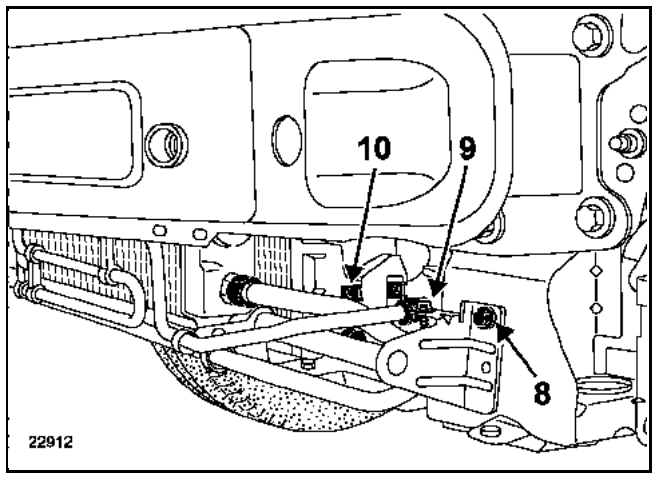

GETtheMANUALS.org

Separate the condenser from the air-to-air intercooler by releasing it upwards. Let the condenser rest on the front cross member.

NOTE:
Take care not to damage the blades.

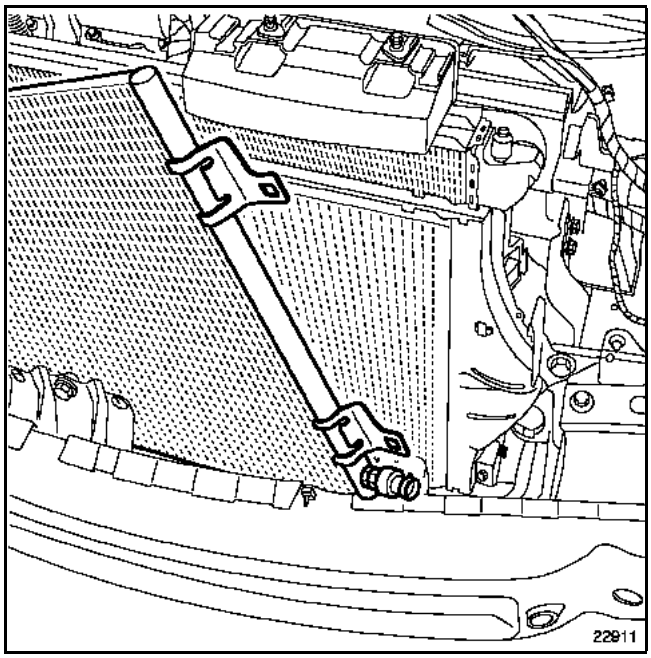

All engine types

Disconnect the air inlets and outlets from the exchanger.

Remove:
– the two mounting clips from the air-to-air intercooler (11),
– the air-air exchanger by releasing it upwards.

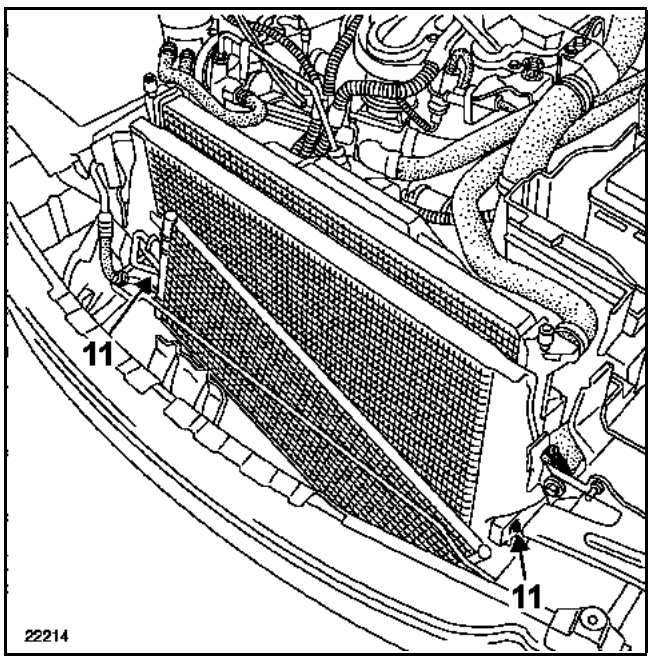

GETtheMANUALS.org

REFITTING

On the ***G9T engine***, be sure to replace the rubber sleeve and pipe mounting clip.

Position the moulding on top so that the plastic indexing lugs on the pipe hitch onto the clamp.

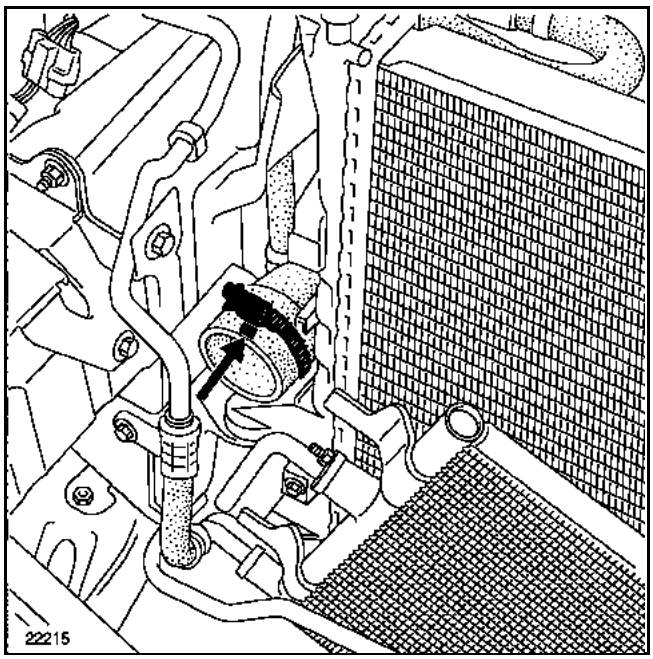

Proceed in the reverse order to removal for the other refitting operations.

IMPORTANT:
The lens units must be adjusted once they have been fitted:
– park the vehicle on level ground,
– set the adjustment control to 0,
– carry out the adjustment.

If the vehicle has Xenon headlights, the system must be initialised and the headlights adjusted (refer to **Headlights with Xenon bulbs, system initialisation**).

IMPORTANT:
It is forbidden to switch on the Xenon headlights unless the bulbs are fitted into the lens unit (**this can damage your eyesight**) .

GETtheMANUALS.org

DESCRIPTION

The petrol system for the engine is a non-return circuit.

The petrol pressure no longer varies according to the engine load.

The circuit comprises:
– a rail (1) without a return pipe union and without a supply pressure regulator,
– a single pipe (2) coming from the tank,
– a fuel supply pump-sender unit/fuel filter assembly fitted with a pressure regulator (3), a pump (4) and a fuel filter (5) (all located in the tank),
– a tank for rebreathing fuel vapours (6).

OPERATING DIAGRAM

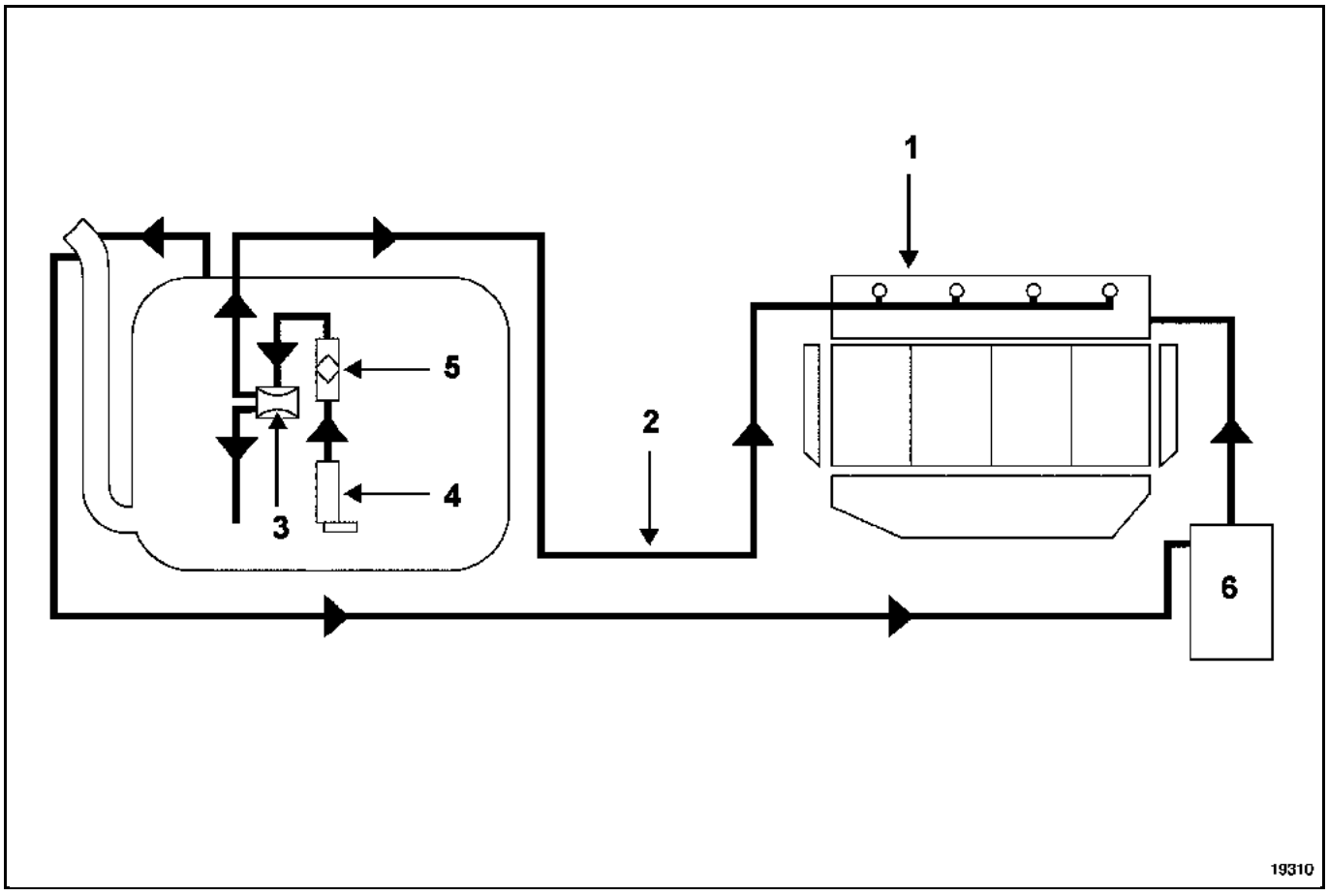

GETtheMANUALS.org

DESCRIPTION

The petrol system for the engine is a non-return circuit.

The petrol pressure no longer varies according to the engine load.

The circuit comprises:
– a rail (1) without a return pipe union and without a supply pressure regulator but with a pulse damper (2),
– a single pipe (3) coming from the tank,
– a fuel supply pump-sender unit/fuel filter assembly fitted with a pressure regulator (4), a pump (5) and a fuel filter (6) (all located in the tank),
– a tank for rebreathing fuel vapours (7).

OPERATING DIAGRAM

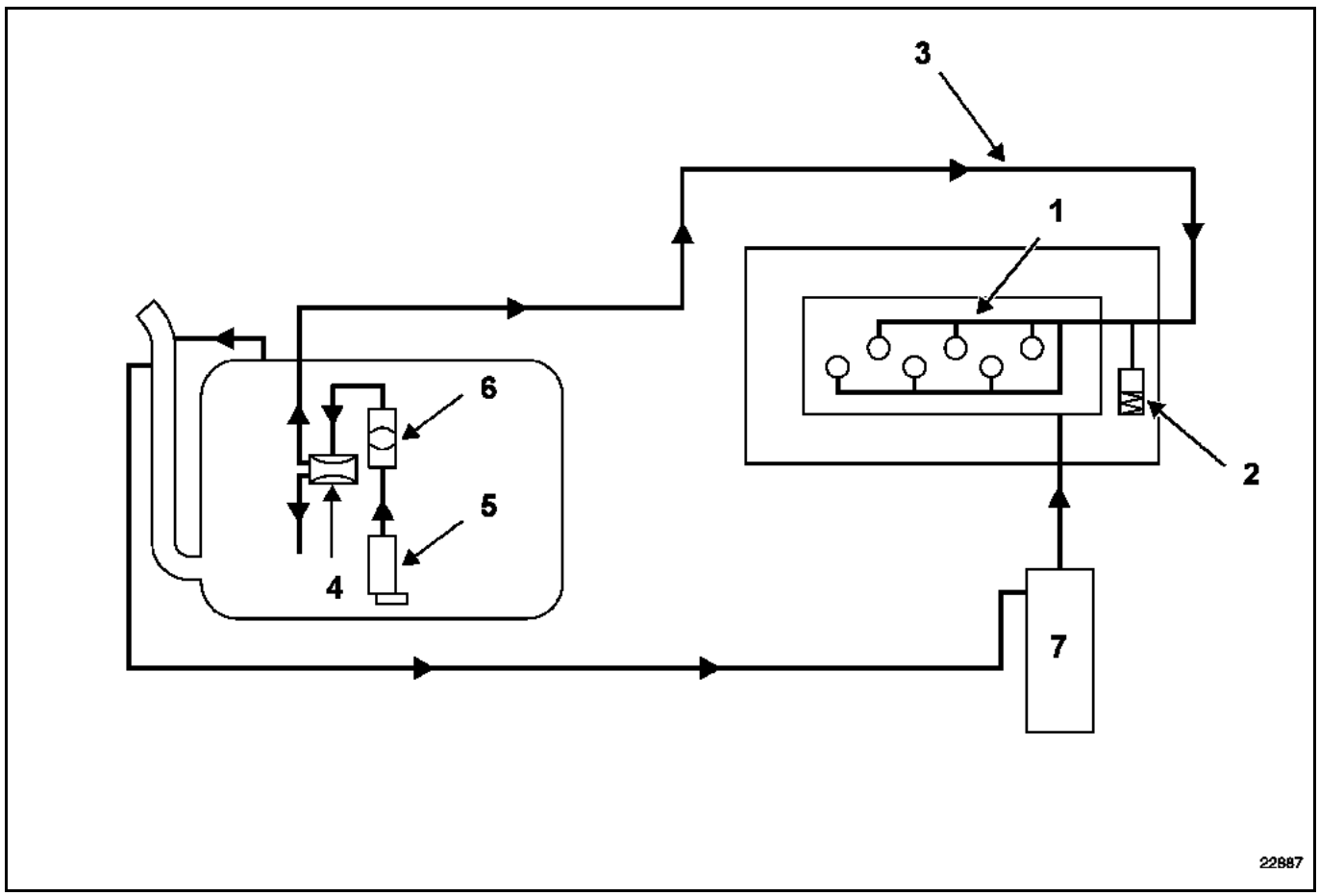

GETtheMANUALS.org

DESCRIPTION

The circuit comprises:
– a pump-sender supply assembly (1) (located in the fuel tank),
– a fuel filter (2),
– a high pressure regulator (3) mounted on the pump,
– a high pressure pump (4),
– an injector rail (5) fitted with a diesel pressure sensor and a pressure limiter (6),
– four solenoid injectors,
– various sensors,
– an injection computer.

Dismantling the interior of the high pressure pump and the injectors is prohibited.

OPERATING DIAGRAM

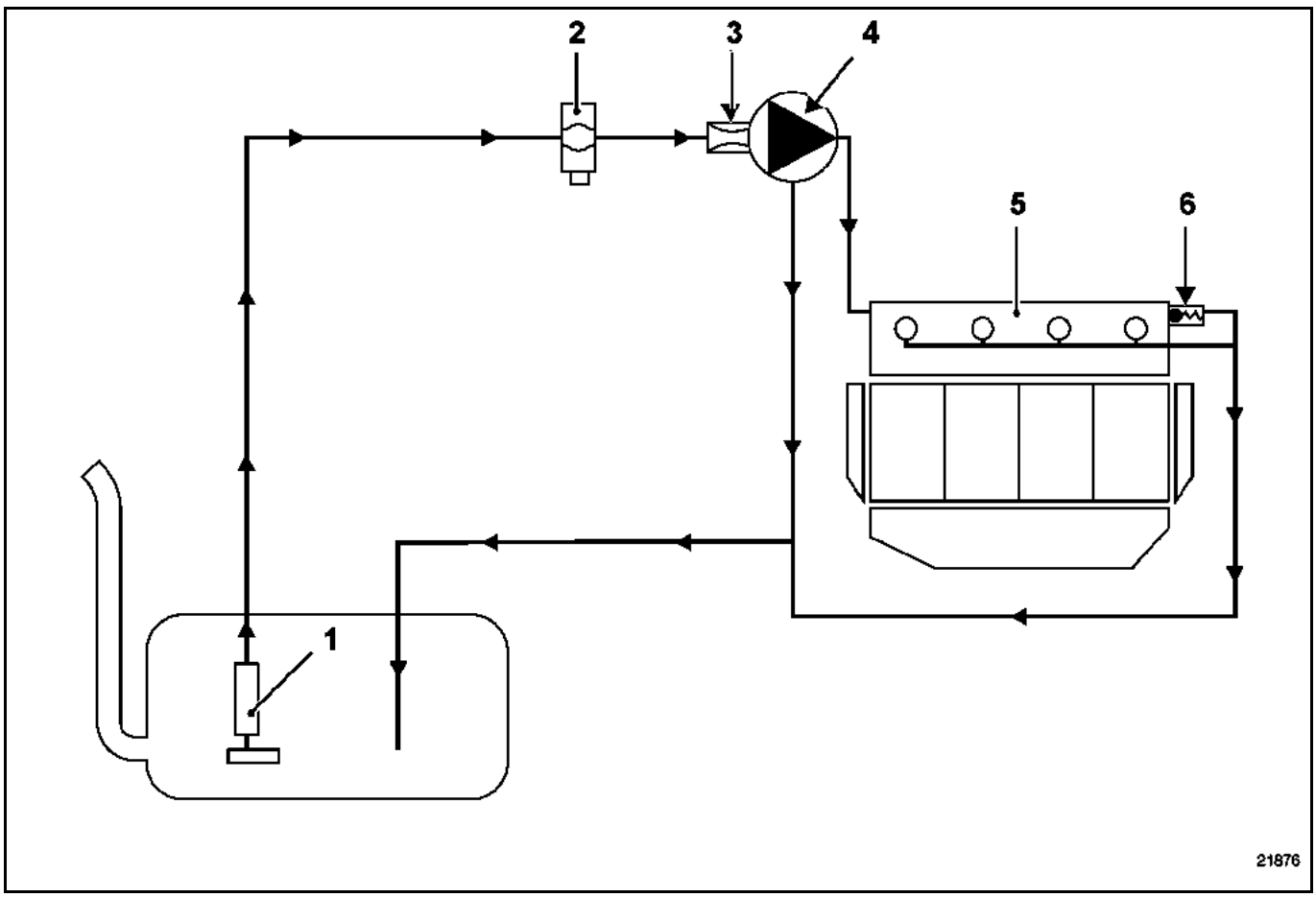

GETtheMANUALS.org

The "Common Rail" direct high pressure injection system is designed to deliver a specific quantity of diesel fuel to the engine at a specific time.

DESCRIPTION

The circuit comprises:
– a priming bulb (1),
– a diesel filter (2) fitted with a reheater,
– a high pressure pump with two pumping pistons (3),
– two pressure regulators (4),
– an injector rail (5) fitted with a pressure sensor (6),
– a pressure limiter (7),
– six solenoid injectors (8),
– a diesel temperature sensor (9).

NOTE:
The following must not be removed:
– the inside of the pump,
– the injectors,
– the pump pressure regulators.

OPERATING DIAGRAM

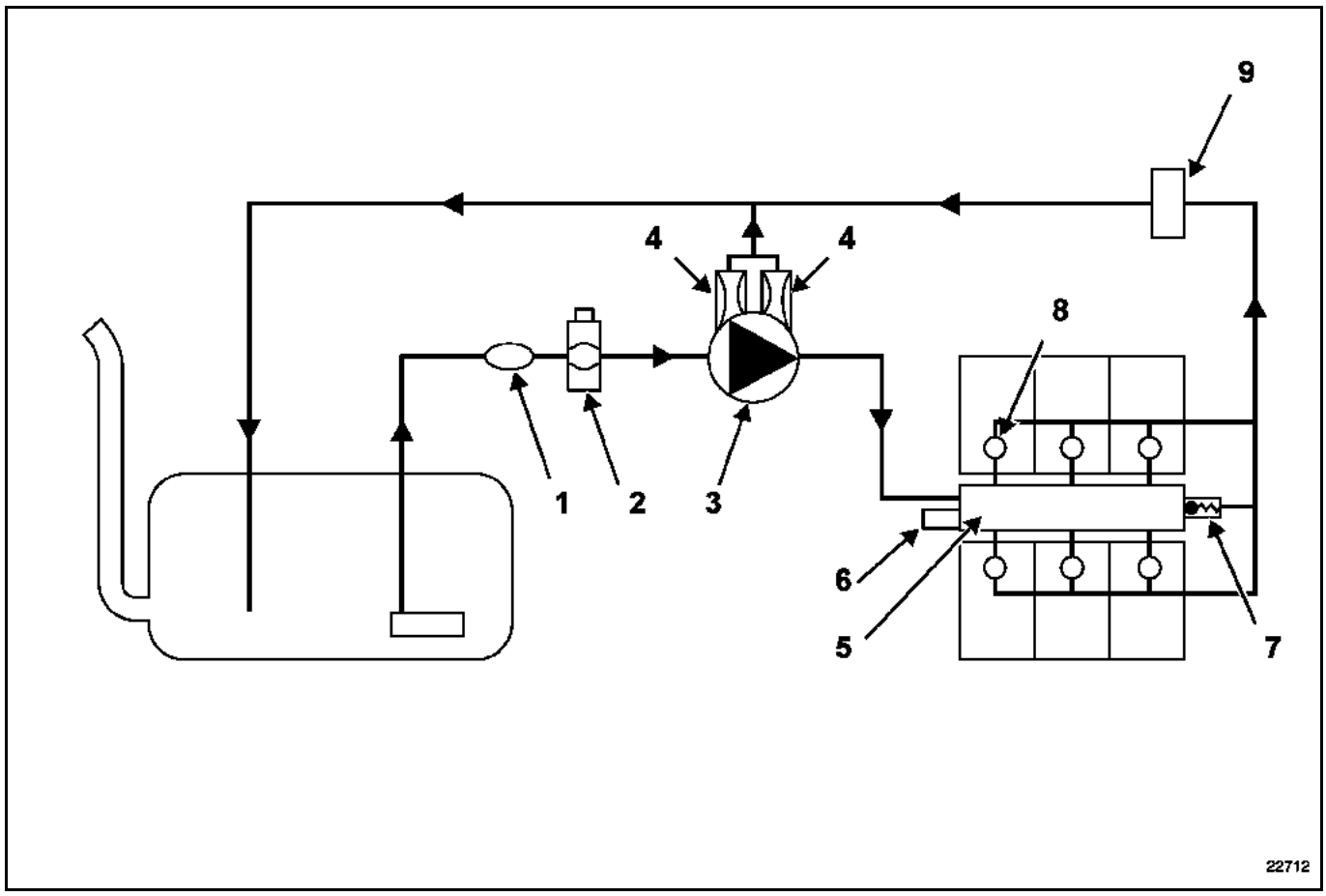

GETtheMANUALS.org

GENERAL INFORMATION

The petrol filter is located in the tank. It is incorporated into the fuel pump-sender unit assembly and cannot be removed.

If it needs to be replaced, then the whole fuel pump-sender unit assembly must be replaced.

It is designed to have a long lasting filtration capacity.

Nevertheless, checking the fuel pressure and the pump flow will enable you to run diagnostics on the fuel pump-sender unit assembly.

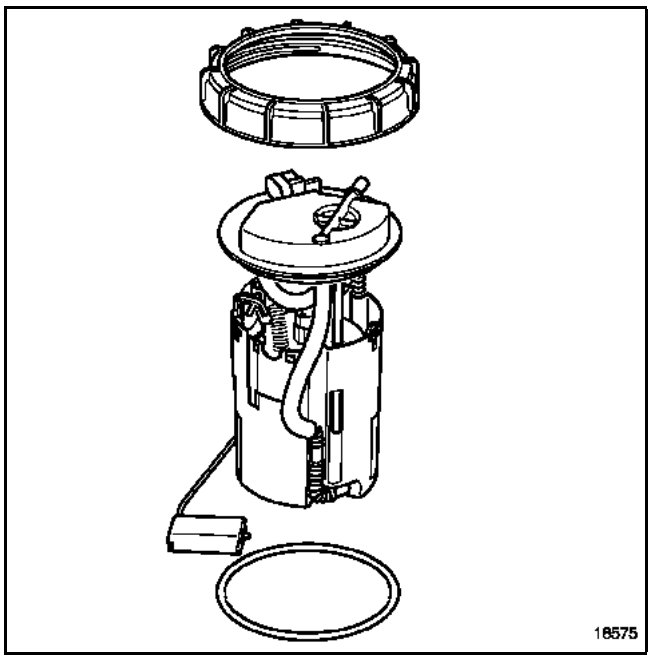

GETtheMANUALS.org

The fuel filter is housed in a removable cartridge. This cartridge contains a diesel fuel heater.

To replace the fuel filter it is therefore necessary to remove the whole unit.

REMOVAL

OBSERVE THE CLEANLINESS ADVICE CLOSELY

IMPORTANT:
Remember that there will be residual pressure and a quantity of diesel fuel remaining in the pipes.

Disconnect the battery.

Disconnect from the filter:
– the diesel fuel heater connector (1),
– the fuel supply pipe to the engine (2),
– the pipes (3) coming from the tank.

Remove the filter by unclipping it from its support.

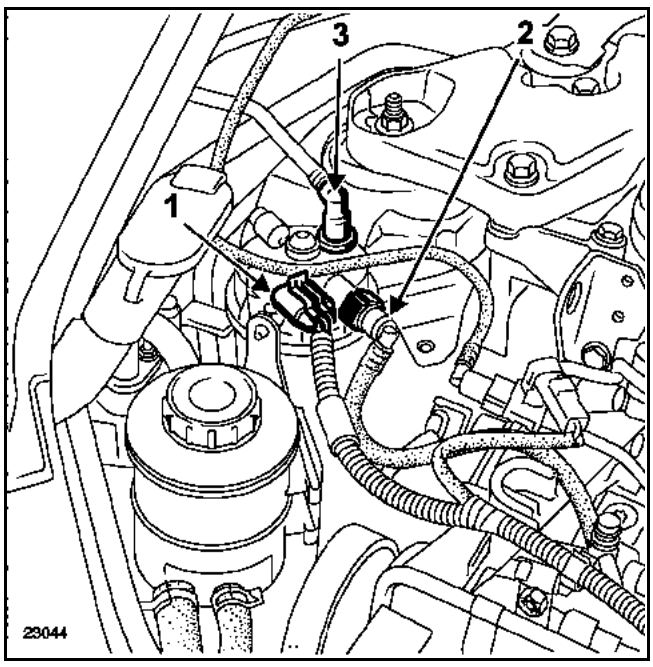

Unscrew filter cover screw (4) and remove the filter element.

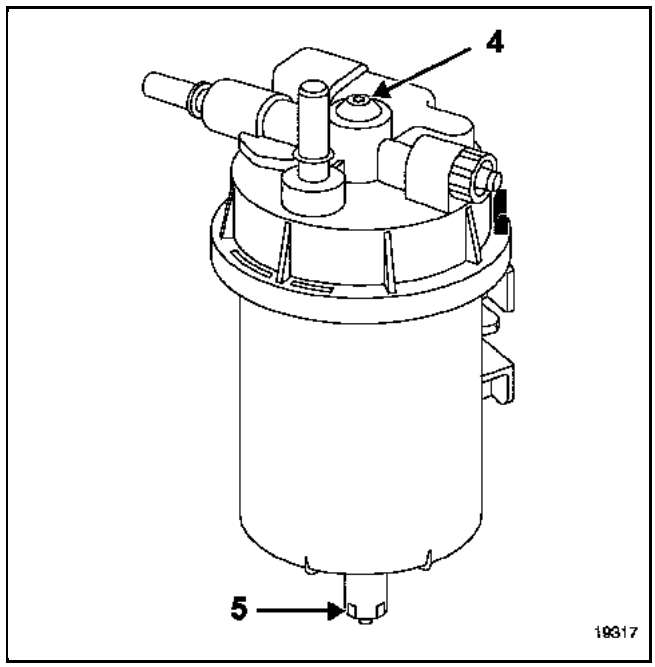

REFITTING

Take care to line up the mark on the cover and the mark on the bowl correctly.

It is vital to observe the position of the unions to the filter.

Be careful not to squeeze or damage the pipes.

IMPORTANT:
Re-prime the system by switching on the ignition several times, or run the low pressure pump with the fault finding tool using the "**Actuator Commands**" menu.

It is necessary to periodically bleed the water trapped in the diesel filter via bleed cap (5).

GETtheMANUALS.org

The fuel filter is located in the engine compartment. It is contained in a removable cartridge. This cartridge incorporates a diesel fuel heater comprising a resistor and a temperature switch.

To replace the filter it is therefore necessary to remove the whole unit.

REMOVAL

OBSERVE THE CLEANLINESS ADVICE CLOSELY

IMPORTANT:
Remember that there will be residual pressure and a quantity of diesel fuel remaining in the pipes.

Disconnect from the filter:
– the diesel fuel heater connector (1),
– the fuel supply pipe to the engine (2),
– the pipes (3) coming from the tank.

Remove the filter by unclipping it from its support.

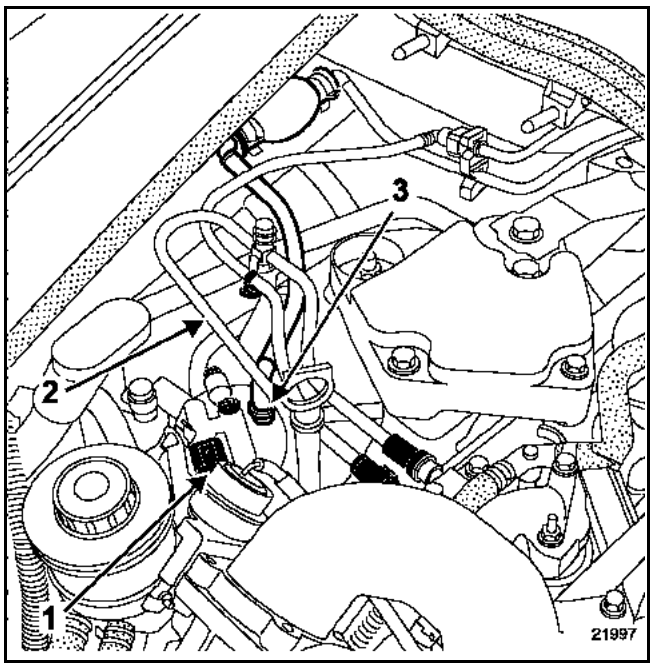

Mark the position of the element cover in relation to the bowl.

Undo bolt (4) and remove the filter element.

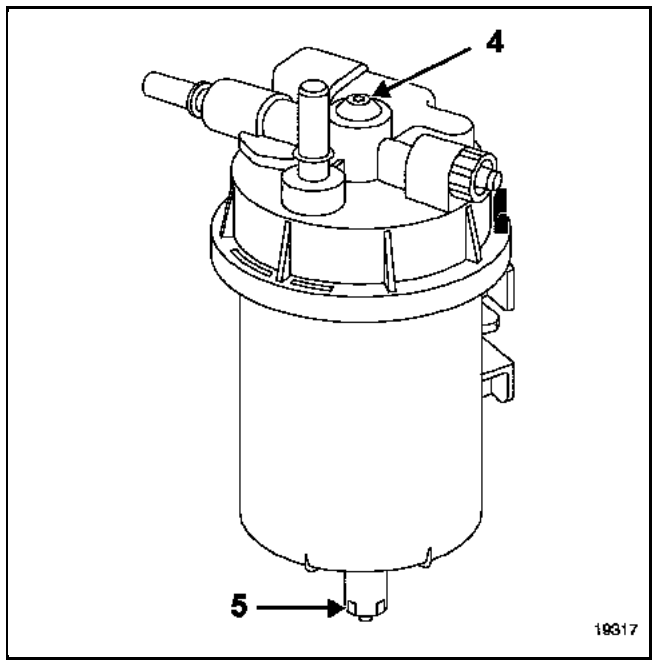

REFITTING

Take care to line up the mark on the cover and the mark on the bowl correctly.

It is vital to observe the position of the unions to the filter.

Be careful not to squeeze or damage the pipes.

IMPORTANT:
Reprime the fuel circuit using the priming bulb.

It is necessary to periodically bleed the water trapped in the diesel filter via bleed cap (5).

GETtheMANUALS.org

TIGHTENING TORQUE (in daNm)	
Injector rail bolt	0.9

The injectors mounted on the **F4R** engine are of the **MAGNETI MARELLI PICO** type.

They are attached to the injector rail by clips.

The fuel circulates constantly around the circumference of the injector body. Wiping the fuel prevents the formation of petrol vapour bubbles and helps cold starting.

REMOVAL

IMPORTANT:
Be careful when removing the injectors or the injector rail as there will be a quantity of fuel in the rail and the union. Protect the alternator.

Disconnect the battery.

Remove the turbocharger cooling air duct (1).

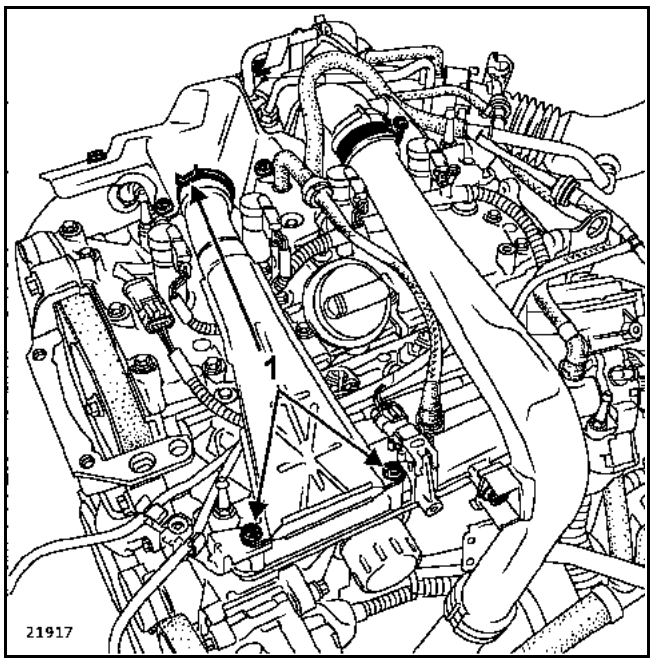

Disconnect:
– the fuel supply union (2) from the injector rail,
– the oil vapour rebreathing union (3),
– the injector connectors (4).

Remove:
– the rail mounting bolts (5),
– the injector rail,
– the injector clips,
– the injectors.

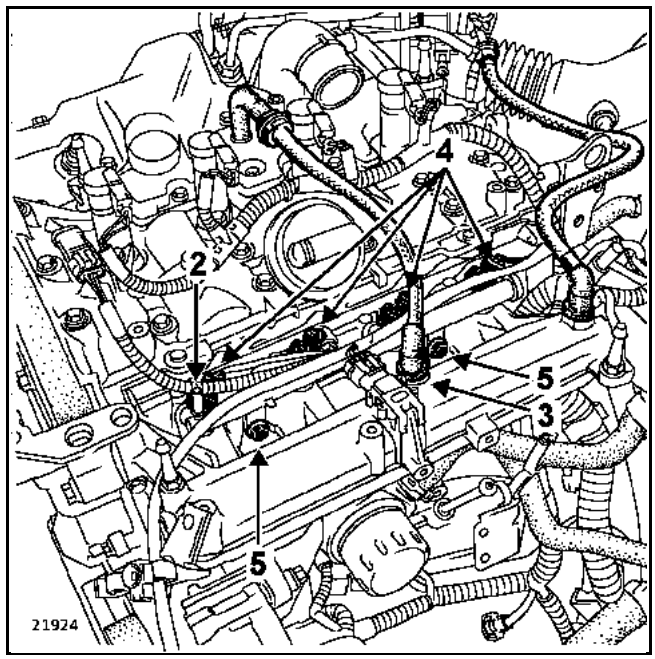

GETtheMANUALS.org

REFITTING

The O-rings and the injector mounting clips must be replaced.

Fit the new clip on the injector and then push the injector until the clip clips onto the rail.

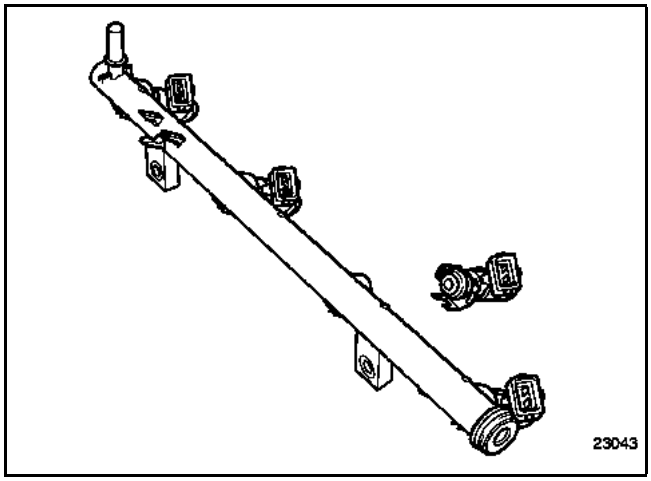

Refit the rail using the correct tightening torque for the mounting bolts.

GETtheMANUALS.org

TIGHTENING TORQUES (in daNm)		
Rail bolts:	**pre-tightening**	**1**
	tightening	**2.3 ± 0.3**

REMOVAL

Disconnect the battery.

Remove the inlet manifold (see section **12A Fuel mixture "Inlet manifold"**).

IMPORTANT:
Be careful when removing the injectors or the injector rail as there will be a quantity of fuel in the rail and the union.

Disconnect:
– the petrol inlet union (1) from the injector rail,
– the injector connectors (2).

Remove the four bolts (3) securing the injector rail.

Remove the injector rail (be careful of the four shims under the rail).

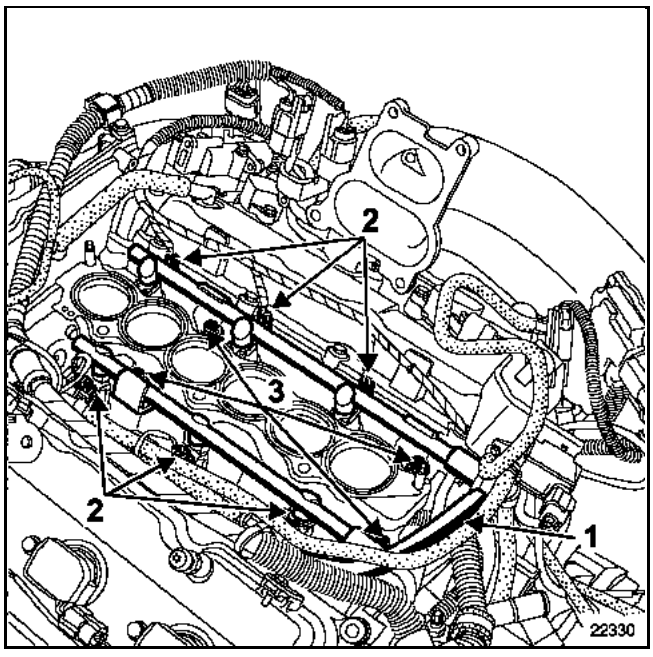

Remove:
– the injector clips,
– the injectors.

REFITTING

The O-rings and the injector mounting clips must be replaced.

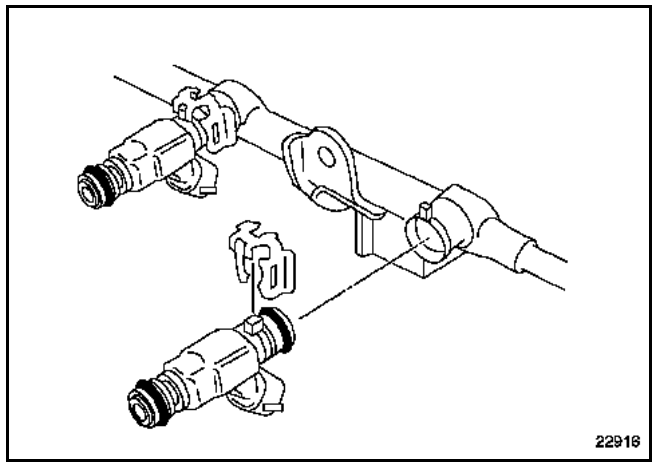

Observe the correct tightening torque for the rail bolts.

Also replace the manifold seals.

Proceed in the reverse order to removal.

GETtheMANUALS.org

F4R, V4Y and G9T engines have a fuel pump.

This pump is located in the fuel tank and is incorporated into the fuel supply assembly and cannot be separated from it.

When replacing it, the fuel pump sender unit assembly must also be replaced for the G9T engine and the fuel pump-sender-filter unit assembly must be replaced for the F4R and V4Y engines.

Checking the fuel pressure and the pump flow will enable a fault finding check of the fuel supply assembly performance to be carried out.

For the procedure of how to remove and refit the fuel pump, refer to Section **19C: Fuel tank: Pump-sender unit**.

ALLOCATION OF TRACKS FOR THE SUPPLY ASSEMBLY

Track	Description
A1	Fuel sender + signal
A2	Not used
B1	Fuel sender - signal
B2	Not used
C1	+ pump
C2	- pump

GETtheMANUALS.org

SPECIAL TOOLING REQUIRED	
Mot. 1311-01	Fuel pressure testing unit with pressure gauge and sockets
Mot. 1311-08	Union for measuring fuel pressure

Disconnect the fuel supply union (1) and connect **"T" union (Mot. 1311-08)**, fitted with a pressure gauge.

IMPORTANT:
Be aware that there will be a quantity of fuel in the rail and in the union. Protect sensitive components.

Start the engine in order to start the fuel pump.

Read the pressure, which should be constant.

Pressure reads: **3.5 bar ± 0.06**.

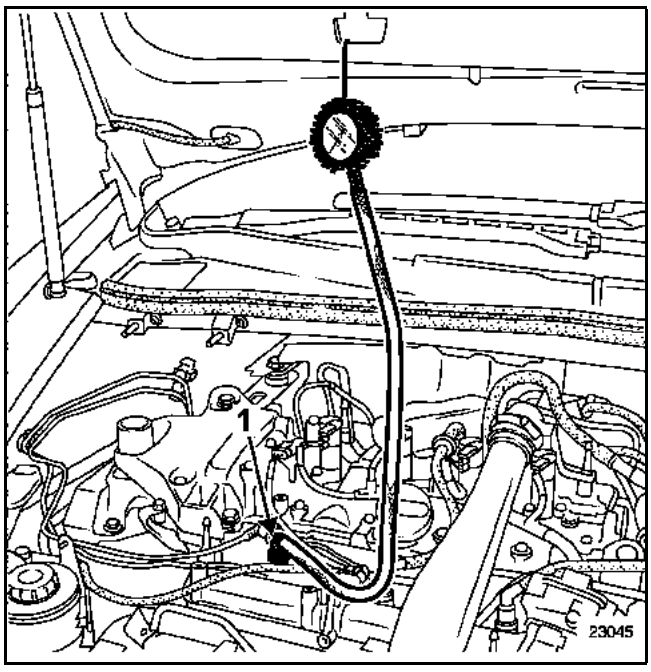

NOTE:
It may take a few seconds to obtain a correct pressure reading in the injector rail.

When the engine is switched off, the fuel pressure should not fall immediately (pressure regulator or pump leak).

GETtheMANUALS.org

SPECIAL TOOLING REQUIRED	
Mot. 1311-01	**Fuel pressure testing unit with pressure gauge and sockets**
Mot. 1311-08	**Union for measuring fuel pressure**

IMPORTANT:
During this operation, it is essential to:
– refrain from smoking or bringing hot objects close to the working area,
– use suitable protection against fuel splashes caused by the residual pressure in the pipes,
– protect sensitive areas from direction of fuel flow.

Disconnect the quick-release union (1) from the fuel supply pipe.

To the union (1), fit the **"T" adaptor Mot. 1311-08** along with the pressure gauge from the test kit **Mot. 1311-01** at (A).

Start the engine in order to start the fuel pump.

Read the pressure, which should be constant.

Pressure reads: **3.5 bar ± 0.06**.

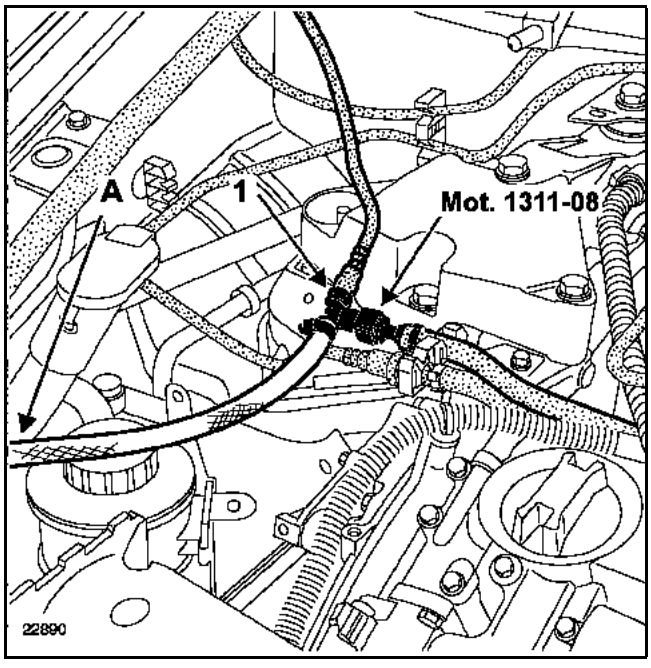

GETtheMANUALS.org

SPECIAL TOOLING REQUIRED	
Mot. 1311-01	Fuel pressure testing unit with pressure gauge and sockets
Mot. 1311-08	Union for measuring fuel pressure
EQUIPMENT REQUIRED	
2000-ml graduated cylinder	

IMPORTANT:
Be aware that there will be a quantity of fuel in the rail and in the union. Protect sensitive components.

Disconnect fuel supply union (1) and connect a **"T" union (Mot. 1311-08)**.

To the union of the **"T" piece (Mot. 1311-08)** connect a sufficiently long pipe so that fuel can be pumped into a graduated measuring cylinder.

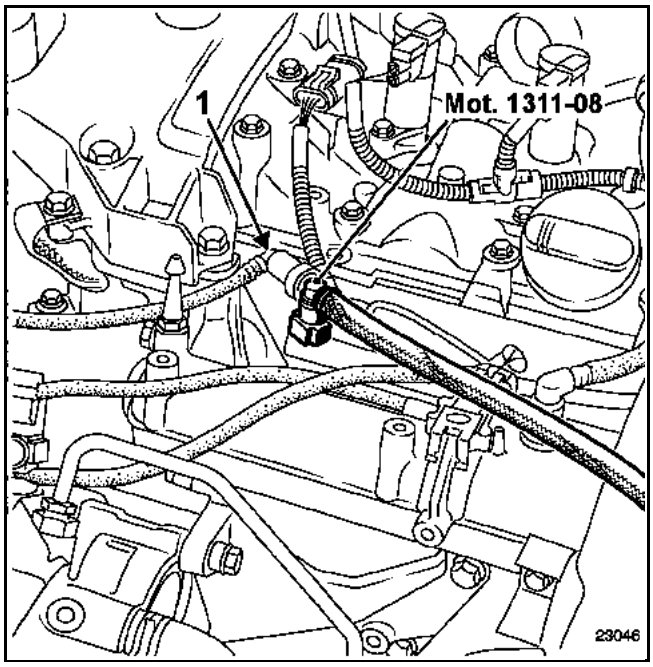

Operate the fuel pump by shunting tracks 3 and 5 of fuel pump relay (A).

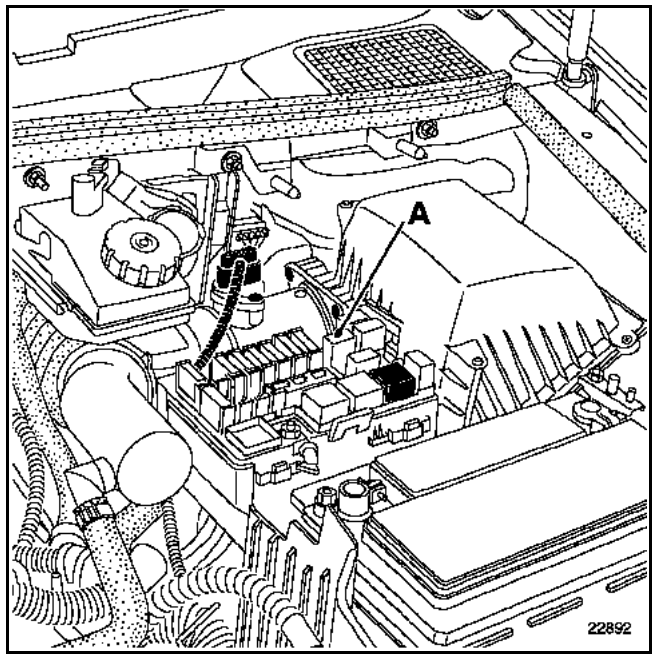

Read the pump delivery rate.

Flow reading: **80 to 120 l/h**.

GETtheMANUALS.org

SPECIAL TOOLING REQUIRED	
Mot. 1311-01	Fuel pressure testing unit with pressure gauge and sockets
Mot. 1311-08	Union for measuring fuel pressure
EQUIPMENT REQUIRED	
One 2000 ml graduated measuring cylinder	

IMPORTANT:
During this operation, it is essential to:
– refrain from smoking or bringing hot objects close to the working area,
– use suitable protection against fuel splashes caused by the residual pressure in the pipes,
– protect sensitive areas from direction of fuel flow.

Disconnect the quick-release union (1) from the fuel supply pipe.

To the quick-release union (1), fit the **"T" union Mot. 1311-08** then connect a sufficiently long pipe (2) so that fuel can be pumped into the graduated measuring cylinder.

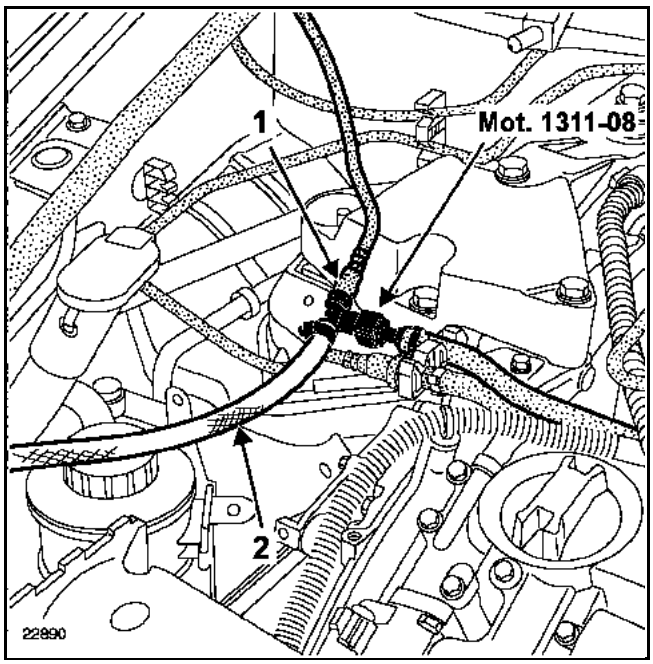

Operate the fuel pump by shunting tracks 3 and 5 of fuel pump relay (A). In one minute, the pump flow must be a minimum of **1.3 l** under **12 V**.

Flow reading: **80 to 100 l/h**.

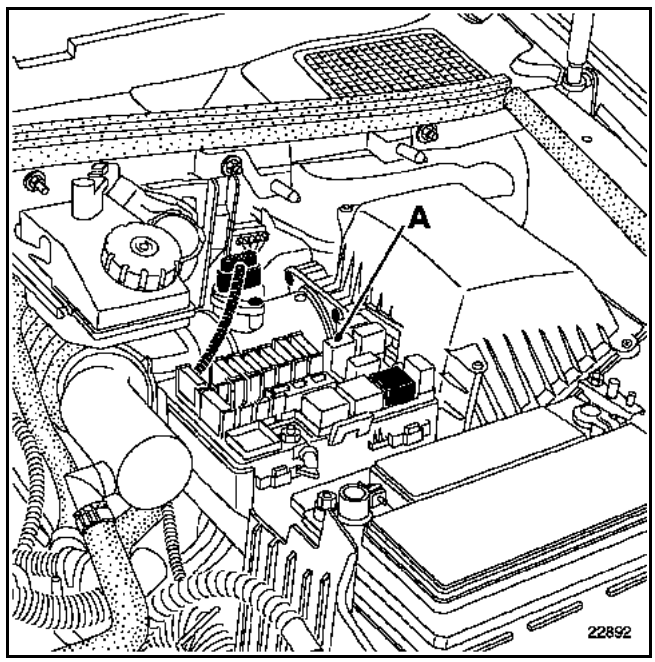

Checking diesel fuel pressure and flow

GETtheMANUALS.org

It is possible to check the pressure and flow in the low pressure fuel circuit.

The low pressure is provided by the low pressure pump (electric pump fitted in the fuel tank) which feeds the high pressure pump during starting phases.

SPECIAL TOOLING REQUIRED	
Mot. 1311-01 or Mot. 1328	Pressure gauge
Mot. 1311-08	"T" union for fuel pressure test kit
EQUIPMENT REQUIRED	
2000-ml graduated cylinder	

LOW PRESSURE CHECK (LOW PRESSURE PUMP)

Fit a **T union, Mot. 1311-08**, to be able to connect the fuel pressure gauge **Mot. 1311-01** to the outlet (2) of the fuel filter.

Operate the pump using the fault finding tool or by shunting tracks 3 and 5 of the low pressure pump (A).

Increase the pressure, which should be between **2.5 and 4 bar**.

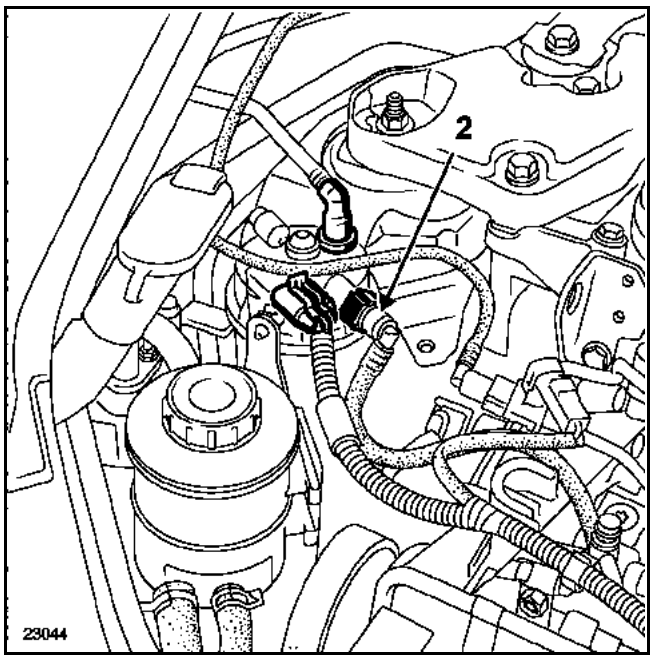

FLOW TEST (LOW PRESSURE PUMP)

Make the pump flow into a **2000 ml** graduated measuring cylinder.

To operate the pump, shunt tracks 3 and 5 of the low pressure pump relay (A).

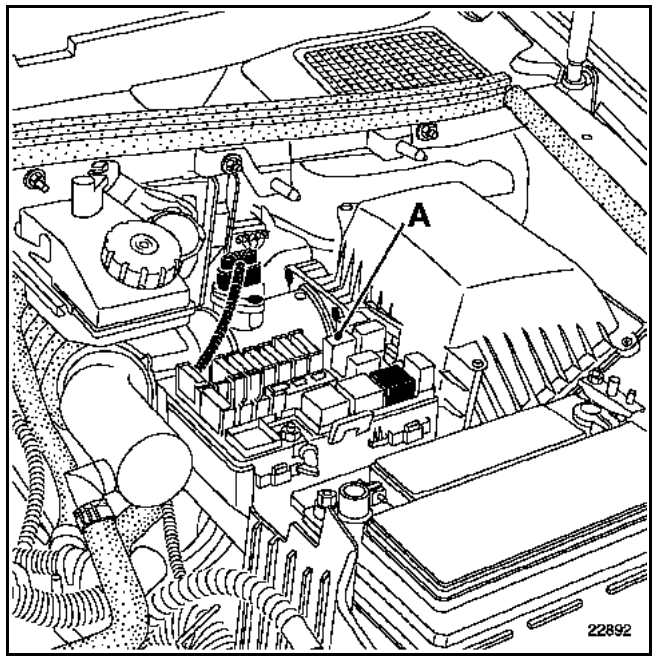

The flow should read at least **80 to 100 l/h**.

IMPORTANT:
It is forbidden to measure the pressure and the flow of the high pressure pump.

GETtheMANUALS.org

OPERATING PRINCIPLE

The anti-percolation system is controlled directly by the injection computer.

The collant temperature signal is taken from the injection system's coolant temperature sensor (see section **17B "Centralised coolant temperature management"**).

After the engine is switched off the system enters monitoring mode.

If the coolant temperature exceeds **107 °C** within **49 seconds** of stopping the engine, the fan low speed relay is energised.

If the coolant temperature falls back below **85 °C**, the fan assembly relay is cut off (the fan assembly cannot operate for more than **10 minutes**).

GETtheMANUALS.org

OPERATING PRINCIPLE

The anti-percolation system is controlled directly by the injection computer.

The coolant temperature information is taken from the injection system's coolant temperature sensor (see section **17B "Centralised coolant temperature management"**).

The injection computer enters monitoring mode after the ignition is switched off.

If the coolant temperature exceeds **102 °C** within 2 minutes of stopping the engine, the fan low speed relay is energised.

If the coolant temperature falls back below **95 °C**, the fan assembly relay is cut off (the fan assembly cannot operate for more than **10 minutes**).

GETtheMANUALS.org

INJECTORS

A **6 figure** code called **IMA** (Injector Flow Correction) is marked on the G9T engine injectors. This code is specific to each injector, and takes into account differences in manufacture and specifies the flow of the injector.

When replacing one or more injectors, the code of the new injector or injectors must be programmed into the computer.

When a computer is reprogrammed or replaced, it is necessary to program the codes of the four injectors.

There are two possibilities:

- If it is possible to re-establish dialogue with the computer:
  - download the data from the old computer into the fault finding tool,
  - replace the computer,
  - transfer the data from the fault finding tool to the new computer,
  - using the fault finding tool, ensure that the computer has not detected faults relating to the injector codes and check that the instrument panel warning light is off.

- If it is not possible to re-establish dialogue with the computer:
  - replace the computer,
  - read the data from the injectors,
  - enter the data in the computer using the fault finding tool,
  - reconfigure the various components such as the air conditioning, thermoplungers, etc,
  - using the fault finding tool, ensure that the computer has not detected faults relating to the injector codes and check that the instrument panel warning light is off.

GETtheMANUALS.org

The high pressure direct injection system is intended to deliver a specific quantity of diesel fuel to the engine at a specific time.

DESCRIPTION

The system comprises:
– a pump-sender supply assembly (located in the fuel tank),
– a fuel filter,
– a pressure regulator mounted on the pump,
– a high pressure pump,
– an injector rail fitted with a diesel fuel pressure sensor and a pressure limiter,
– four solenoid injectors,
– various sensors,
– an injection computer.

OPERATION

The "**Common Rail**" high pressure direct injection system is a sequential diesel fuel injection system (based on the petrol engine multipoint injection system).

This new injection system reduces operating noise, reduces the volume of pollutant gases and particles and produces high engine torque at low engine speeds thanks to a pre-injection procedure.

The low pressure pump (also called the booster pump) supplies the **High Pressure** pump via the fuel filter **during the starting phase only**, under a pressure of between **2 and 4 bars**.

The **high pressure** pump generates the high pressure transmitted to the injector rail. The pressure regulator located on the pump modulates the high pressure pump supply flow. The rail supplies each injector through a steel pipe.

The computer:
– determines the injection pressure value necessary for the engine to run correctly and then controls the pressure regulator. It checks that the pressure value is correct by analysing the value transmitted by the pressure sensor located on the rail,
– determines the injection timing required to deliver the right quantity of diesel fuel and the moment when injection should start,
– electrically controls each injector individually after determining these two values.

The flow injected into the engine is determined by:
– the duration of injector control,
– the injector opening and closing speed,
– the needle stroke (determined by the type of injector),
– the injector nominal hydraulic flow (determined by the type of injector),
– the high pressure rail pressure controlled by the computer.

THE CLEANLINESS AND SAFETY ADVICE SPECIFIED IN THIS DOCUMENT MUST BE FOLLOWED DURING ANY WORK CARRIED OUT ON THE HIGH PRESSURE INJECTION SYSTEM.

GETtheMANUALS.org

CHECKING TIGHTNESS AFTER REPAIR

Re-prime the circuit. To do this, turn the low pressure pump over by switching on the ignition several times, or turn the low pressure pump over with the fault finding tool using the **Actuator Commands** menu.

After any operation, check that there are no diesel fuel leaks. Run the engine until the engine cooling fan starts up, then accelerate several times with no load.

IMPORTANT:
The engine must not run with diesel fuel containing more than 10% diester.

The system can inject the diesel fuel into the engine at a pressure of up to **1350 bar**. **Check that the injector rail is depressurised before carrying out any work.**

It is absolutely vital that you observe the tightening torque:
– of the high pressure pipes,
– of the cylinder head injector,
– of the pressure sensor and pressure regulator.

When the high pressure pump, injectors and high pressure supply, return and output unions are removed or repaired, all orifices should be fitted with appropriate new blanking covers to prevent contamination entering.

WARNING: ALL PIPES REMOVED MUST BE REPLACED.

When replacing a high pressure pipe, follow the method below:
– remove the high pressure pipe, holding the filter rod on the injector with a lock-wrench,
– insert the anti-contamination caps,
– loosen the high pressure rail,
– fit the new high pressure pipe,
– manually bring the unions together until they touch,
– tighten the high pressure rail mountings to the required torque value,
– tighten the union at the injector side to torque,
– tighten the high pressure rail union to torque.

Dismantling the interior of the pump is prohibited.

The fuel return pipe fitted to the injectors must be replaced when it is removed.

The diesel fuel temperature sensor cannot be removed. It is part of the fuel return rail.

Loosening a high pressure pipe union when the engine is running is prohibited.

GETtheMANUALS.org

The **DENSO ECD-2UP** high pressure injection system is designed to deliver a precise quantity of diesel fuel to the engine at a precisely determined moment.

DESCRIPTION

- **DENSO 121-track** flash EEPROM computer controlling the injection.

- The system comprises:
  - a priming bulb on the low pressure circuit,
  - a diesel filter fitted with a diesel fuel heater,
  - a high pressure pump with a built-in low pressure pump (transfer pump),
  - two pressure regulators mounted on the pump,
  - an injector rail,
  - a diesel rail pressure sensor,
  - a pressure limiter on the rail,
  - six solenoid injectors,
  - an injector power computer,
  - a diesel fuel temperature sensor,
  - a coolant temperature sensor,
  - an air temperature sensor,
  - an air flowmeter,
  - a cylinder reference sensor,
  - an engine speed sensor,
  - a turbocharging pressure sensor,
  - a wastegate position sensor,
  - a turbocharging pressure regulation solenoid valve,
  - an exhaust gas recirculation solenoid valve,
  - an exhaust gas recirculation valve position sensor,
  - a damping unit control solenoid valve,
  - a damping unit,
  - an accelerator pedal potentiometer,
  - an atmospheric pressure sensor,
  - a computer.

- The common rail direct high pressure injection system works sequentially (based on multipoint injection operation for petrol engines).

- This new injection system reduces operating noise, reduces the volume of pollutant gases and particles and produces high engine torque at low engine speeds thanks to a pre-injection procedure.

GETtheMANUALS.org

- The high pressure pump generates the high pressure and transmits it to the injector rail. The two pressure regulators located on the pump control the pressure according to the requirement determined by the computer. The rail supplies each injector through a steel pipe.

- The **injection computer** receives signals from various sensors. It calculates the injection characteristics (advance, pre-injection, injection timing) and sends a control signal to the **power computer** which controls the opening of the injectors.

- **A damping flap** closes when the ignition is switched off. It blocks the air supply in order to stop the engine gradually and smoothly. To close the flap, the computer controls a solenoid valve which lets the vacuum from the vacuum pump pass through to the control diaphragm.

- In order to reduce the percentage of pollutant emissions, the P9X engine uses **a recirculated exhaust fumes cooler**. The gas let into the cylinders by the exhaust gas recirculation valve crosses an exchanger cooled by coolant. This results in the combustion temperature lowering. In this way, NOx emissions are reduced.

- The P9X engine uses **a potentiometer** which measures the movement of the turbocharger **wastegate** pin. The injection computer uses this information to fine tune the turbocharging regulation.

- During manufacture, tolerances lead to flow differences between the injectors. These differences cause operation noise and excess pollution.
  To compensate for these differences, a **calibration resistor** is fitted during manufacture into the electrical connector of each injector.
  The injection computer reads the value of this resistor which corresponds to the injector's tolerance. It then adjusts the injection timing so that the flow is the same on each injector.

- The computer:
  – determines the injection pressure value necessary for the engine to operate correctly and then controls the pressure regulators. It checks that the pressure value is correct by analysing the value transmitted by the pressure sensor located on the rail,
  – determines the injection timing required to deliver the right quantity of diesel fuel and the moment when injection should start,
  – controls each injector electrically and individually, via the power computer, after determining these two values.

GETtheMANUALS.org

- The high pressure pump is supplied at low pressure by an integrated low pressure pump (transfer pump) which consists of **two pumping pistons**. The pump has **two pressure regulators** in order to regulate the pressure. Each pressure regulator controls the amount of diesel let into a pumping element.

- The computer manages:
  – idling regulation,
  – exhaust fumes flow re-injection to the inlet,
  – the fuel supply (advance, flow and rail pressure),
  – the fan assembly (central coolant temperature management function),
  – thermal regulation of the cooling circuit (thermoplungers),
  – the authorisation to engage the air conditioning compressor clutch,
  – the adaptive cruise control function,
  – the pre/postheating function.

- The fan assembly and the coolant temperature warning light on the instrument panel are controlled by the injection computer (GCTE = Central Coolant Temperature Management).

- The connections between the vehicle's various computers are multiplexed. The fault warning lights on the instrument panel are therefore activated via the multiplex network.

- In the event of an impact, the diesel supply circuit cut-off signal is provided by the air bag computer. The airbag computer gives the command via the multiplex network to the injection computer to lock the injection locking relay control.
  Unlocking is only possible after the ignition has been switched off for 10 seconds. This operation will cause the fault warning light to be come on for longer than usual when the ignition is switched on. The warning light will only return to normal operation when the fault has been cleared using the fault finding tool.

- The adaptive cruise control function is controlled by the injection computer.

GETtheMANUALS.org

IMPORTANT

- **The engine must not operate with:**
  - **diesel containing more than 10% diester,**
  - **petrol, even in tiny quantities.**

- **The system injects the diesel into the engine at a pressure of up to 1450 bar. Before each operation, check that the injector rail is depressurised and that the fuel temperature is not too high.**

- **You must respect the cleaning and safety advice specified in this document for any work on the high pressure injection system.**

- **Removal of the interior of the pump and injectors is prohibited.**

- **The following must not be removed:**
  - **the pressure regulators on the pump,**
  - **the wastegate position sensor.**

- **For safety reasons, it is strictly forbidden to undo a high pressure pipe union when the engine is running.**

- **All high pressure pipes removed must be replaced as a matter of course.**

- **It is forbidden to repair the wiring harness connecting the cylinder reference sensor and the engine speed sensor. In the event of a fault, replace the wiring harness.**

- **Applying 12 volts directly to any component in the system is prohibited.**

- **Ultrasonic descaling and cleaning are prohibited.**

- **Never start the engine unless the battery is connected correctly.**

- **Disconnect the injection system computer when carrying out any welding work on the vehicle.**

- **A resistance is marked on the injectors. This resistance is specific to each injector, and takes into account differences in manufacture and specifies the flow injected by each one.**

GETtheMANUALS.org

CHECKING TIGHTNESS AFTER REPAIR

After any operation, check that there are no diesel fuel leaks.

Version Vdiag 4 of ECD-2UP DENSO injection

Re-prime the circuit using the priming pump.

Start the engine and run it until it reaches operating temperature.

Check that there is no diesel leak.

Apply tracing fluid to the high pressure connections of the pipe that has been replaced.

Perform a road test passing through all of the engine operating ranges (observe the speed limits in force).

Perform a visual inspection after the road test to make sure that there are no high pressure leaks.

Clean off the indicator fluid.

Version Vdiag 8 of ECD-2UP DENSO injection

NOTE:
ECD-2UP DENSO injection version Vdiag 8 has a command which may be issued through the fault finding tool. It enables the high pressure circuit to be tested for leaks when the vehicle is stationary with the engine running.

Re-prime the circuit using the priming pump.

This command can only be used if the coolant temperature **is above 80 °C**.

Apply indicator solution to the high pressure connections.

Activate command **SC001 "High Pressure Circuit Tightness Test"**. The engine speed is automatically boosted to **2000 rpms** for **2 minutes** then drops to idling speed.

Check visually that there is no high pressure leak.

Clean off the indicator fluid.

INJECTOR TEST

NOTE:
The Vdiag 8 version of ECD-2UP DENSO injection has a command which may be issued through the fault finding tool which inhibits the injectors one by one.

This command can only be used if the engine coolant is above **80 °C**.

Connect the fault finding tool then inhibit the injectors one by one using the commands located in **Command modes / actuators**.

AC632	**INJECTOR NO. 1 TEST**
AC633	**INJECTOR NO. 2 TEST**
AC634	**INJECTOR NO. 3 TEST**
AC635	**INJECTOR NO. 4 TEST**
AC636	**INJECTOR NO. 5 TEST**
AC637	**INJECTOR NO. 6 TEST**

GETtheMANUALS.org

CLEANLINESS ADVICE THAT MUST BE FOLLOWED WHEN WORKING ON THE HIGH PRESSURE DIRECT INJECTION SYSTEM

Risks relating to contamination

The system is highly sensitive to contamination. The risks resulting from contamination are:
– damage to or destruction of the high pressure injection system,
– a component seizing or leaking.

All after sales operations must be performed under very clean conditions. This means that no impurities (particles a few microns in size) should penetrate the system during dismantling or get into the circuits via the fuel unions.

The cleanliness guidelines must be applied from the filter through to the injectors.

WHAT ARE THE SOURCES OF CONTAMINATION?

Contamination is caused by:
– metal or plastic chips,
– paint,
– fibres,
  ● from cardboard boxes,
  ● from brushes,
  ● from paper,
  ● from clothing,
  ● from cloth.
– foreign bodies such as hair,
– ambient air,
– etc.

IMPORTANT:
Cleaning the engine using a high pressure washer is prohibited because of the risk of damaging connections. Furthermore, moisture may collect in connectors and cause electrical connection problems.

NOTES TO BE FOLLOWED <u>BEFORE ANY WORK IS CARRIED OUT</u> ON THE INJECTION SYSTEM

● Ensure that you have the caps for the unions to be opened (bag of plugs sold by the Parts Department). Caps are to be used once only. After use, they must be thrown away (once used they are soiled and cleaning is not sufficient to make them reusable). Unused caps must be discarded.

● Ensure that you have resealable plastic bags for storing removed parts. There is less risk of parts stored in this way being exposed to contamination. These are single-use bags; after use they must be discarded.

● Make sure that lint-free towelettes are available (part number **77 11 211 707**). The use of conventional cloth or paper wipes is prohibited. They are not lint-free and may contaminate the system fuel circuit. Each rag must be used once only.

GETtheMANUALS.org

INSTRUCTIONS TO BE FOLLOWED BEFORE OPENING THE FUEL CIRCUIT

- Use fresh thinner for each operation (used thinner is contaminated). Pour it into an uncontaminated container.
- For each operation, use a clean brush in good condition (the brush must not shed its bristles).
- Use a brush and thinners to clean the unions to be opened.
- Blow compressed air over the cleaned parts (tools, workbench, and the parts, unions and injection system area). Check that there are no remaining bristles.
- Wash your hands before and during the operation if necessary.
- When wearing leather protective gloves, cover them with latex gloves.

NOTES TO BE FOLLOWED DURING THE OPERATION

- As soon as the circuit is open, all openings must be capped to prevent contamination. The caps to be used are available from the Parts Department. They must not be reused under any circumstances.
- Close the resealable bag, even if it has to be reopened shortly afterwards. The ambient air carries impurities.
- All components removed from the injection system must be stored in a hermetically sealed plastic bag once they have been capped.
- Using a brush, thinner, air gun, sponge or normal rag is strictly prohibited once the circuit has been opened. In fact, these elements are liable to cause the entry of impurities into the system.
- When replacing an old component with a new one, it must not be removed from its packaging until it is to be fitted on the vehicle.

GETtheMANUALS.org

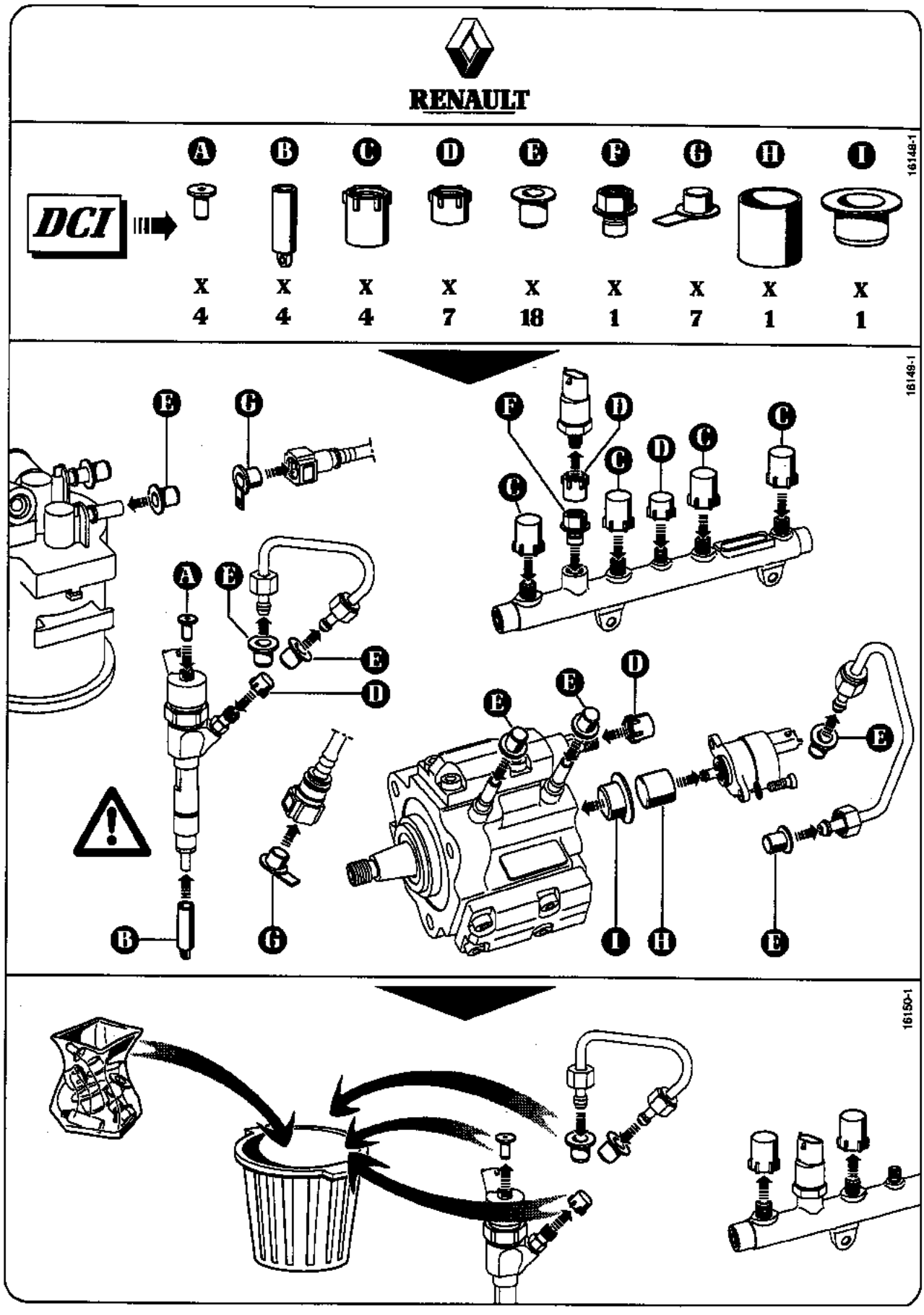

GETtheMANUALS.org

INSTRUCTIONS FOR FITTING THE CAPS

The fitting instructions for the blanking plugs are contained in the plug kit available from the parts department.

GETtheMANUALS.org

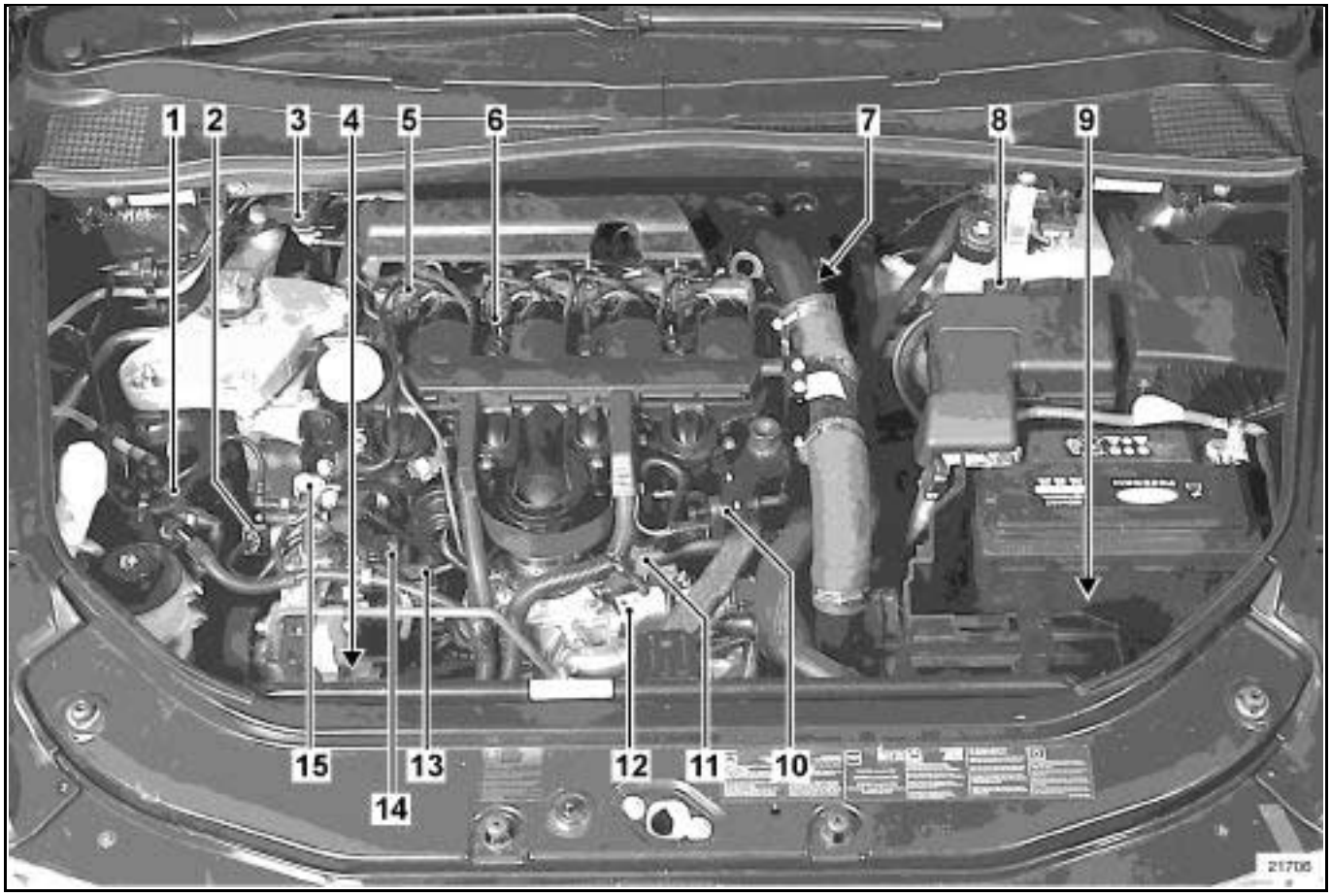

1 Diesel filter with heater
2 Cylinder marking sensor
3 Turbocharging pressure regulating solenoid valve
4 Turbocharging pressure sensor
5 Injector
6 Heater plug
7 Thermoplunger unit
8 Air flowmeter with air temperature sensor
9 Injection computer
10 Turbocharging flap solenoid valve (swirl solenoid valve)
11 Damping flap solenoid valve (engine stop solenoid valve)
12 Damper unit with exhaust gas recirculation valve
13 Pressure regulator
14 high pressure pump
15 Diesel fuel temperature sensor

GETtheMANUALS.org

1 Injector
2 Injector diesel return pipe
3 Pressure sensor
4 Common injector rail
5 High pressure pump-rail fuel supply pipe

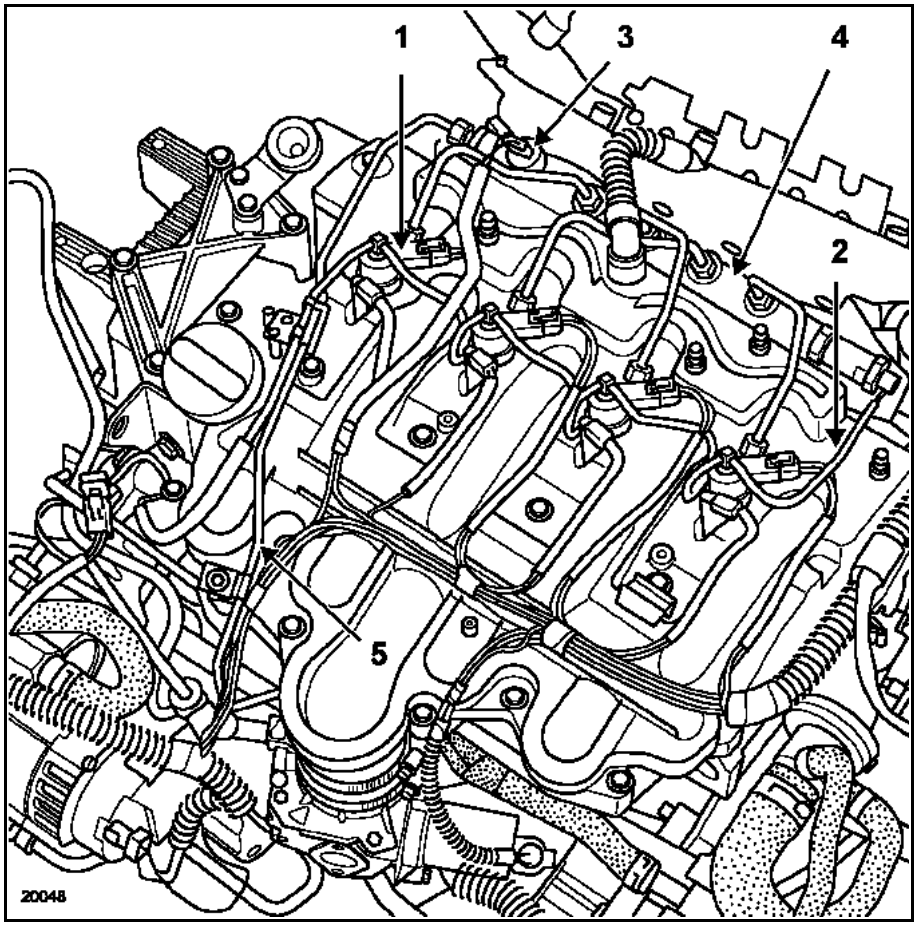

6 high pressure pump
7 Pressure regulator

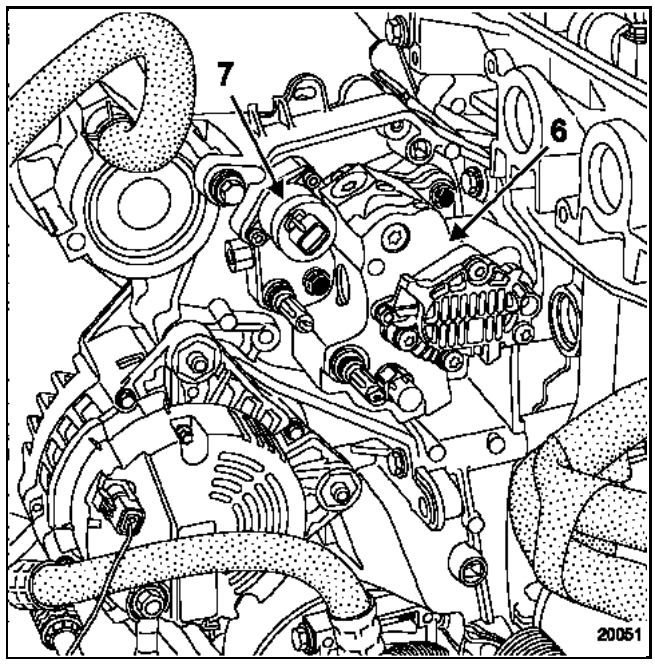

GETtheMANUALS.org

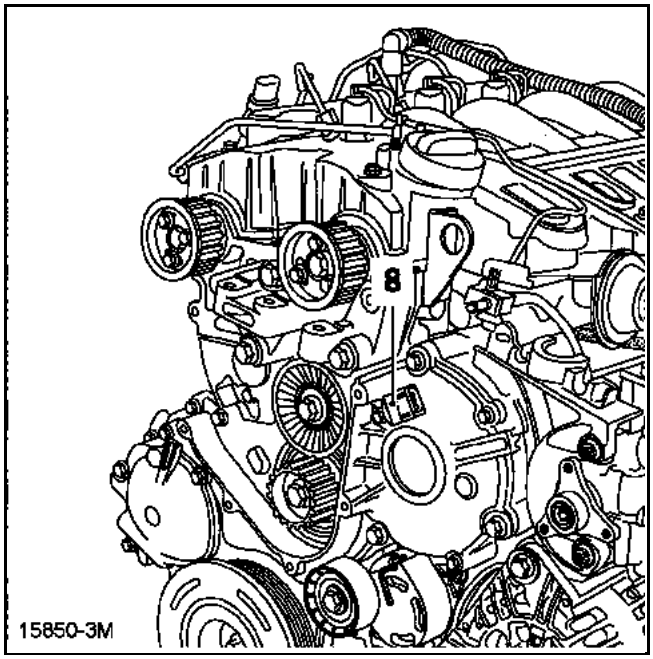

8 Cylinder marking sensor
9 Turbocharger
10 Light-off catalyst

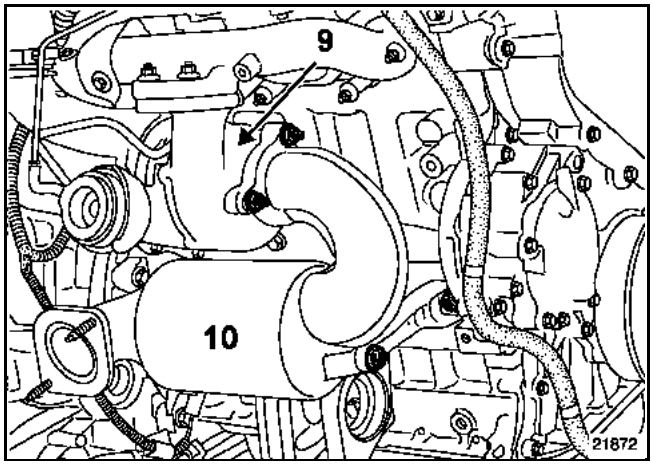

11 Damper unit
12 Exhaust gas recirculation valve

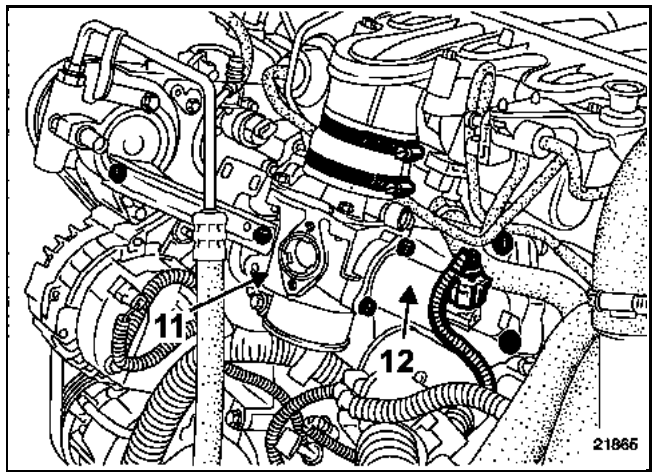

13 Air flowmeter with air temperature sensor

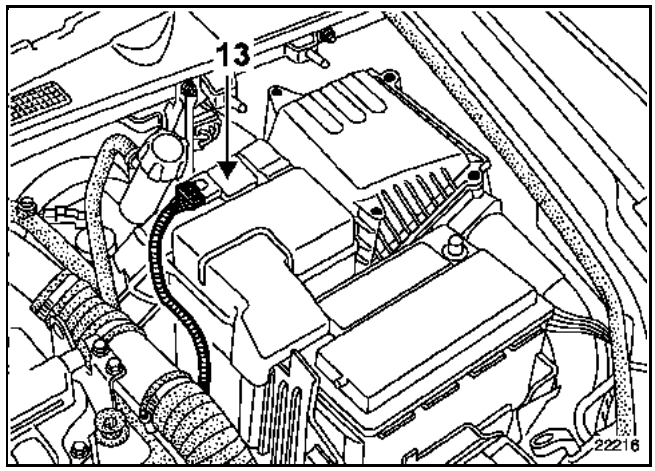

14 Turbocharging flap solenoid valve (swirl solenoid valve)
15 Damping flap solenoid valve (engine stop solenoid valve)

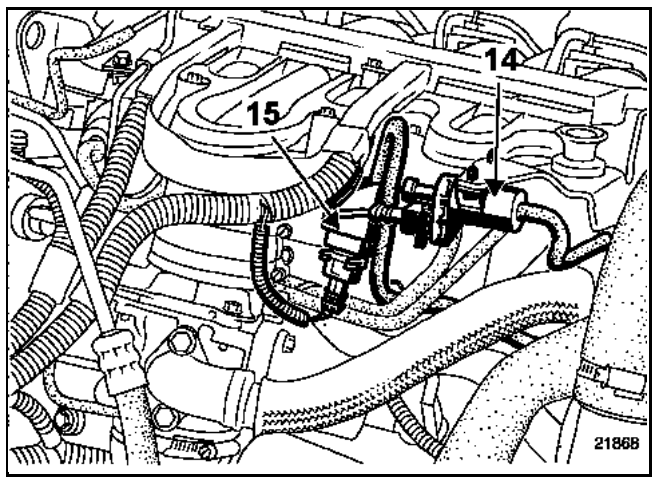

GETtheMANUALS.org

16 Swirl flap control diaphragm
17 Engine stop flap control diaphragm
18 Turbocharging pressure sensor

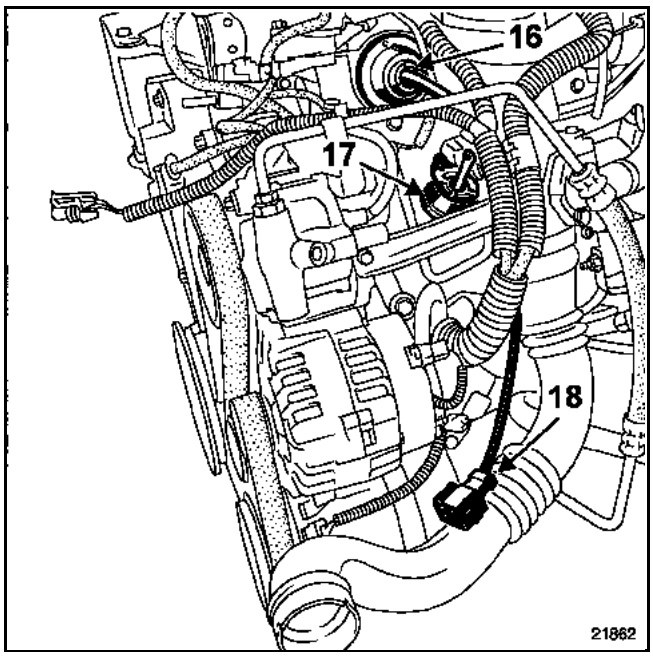

19 Thermoplunger unit

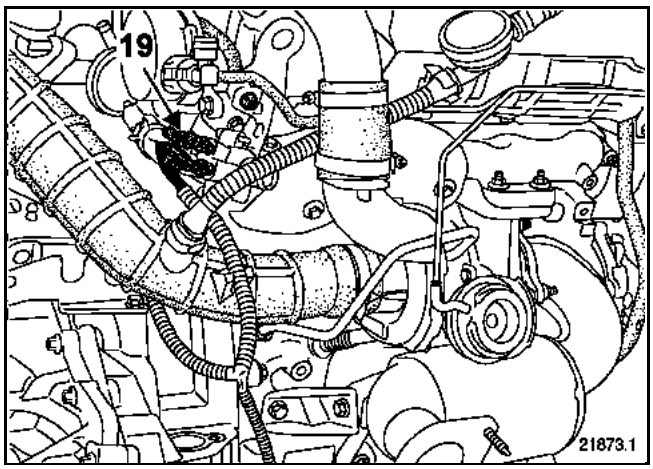

20 Preheating unit

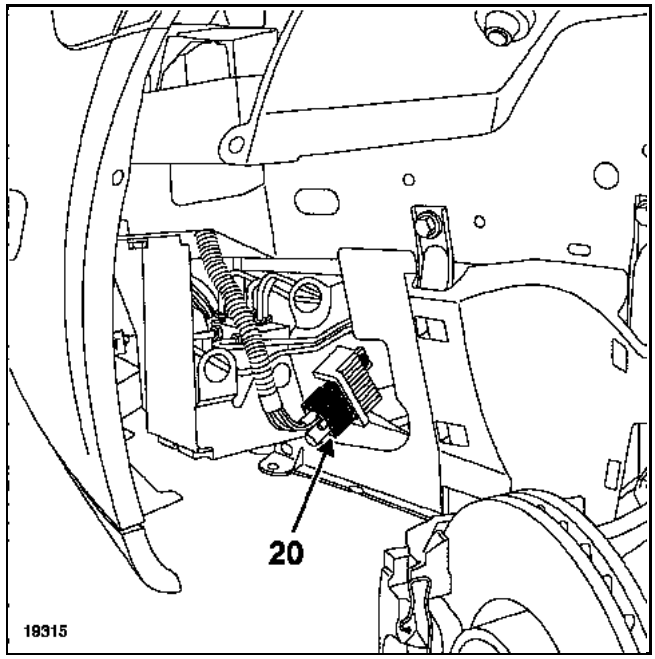

21 Diesel filter

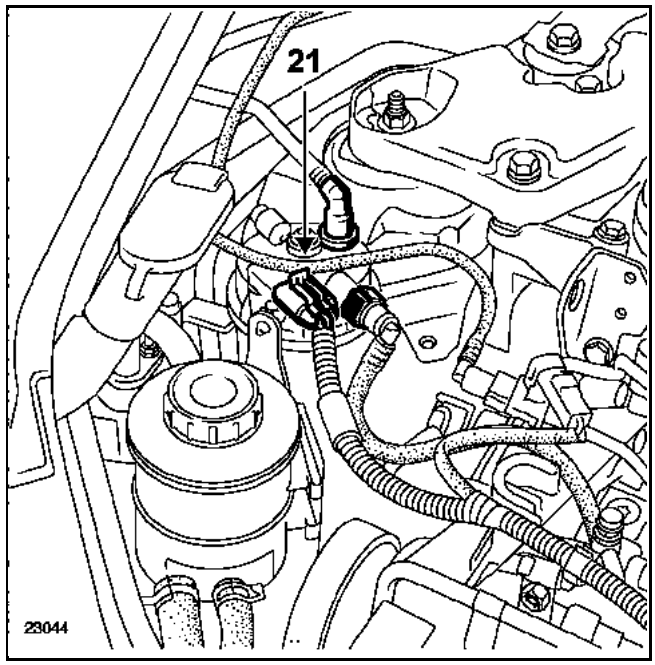

GETtheMANUALS.org

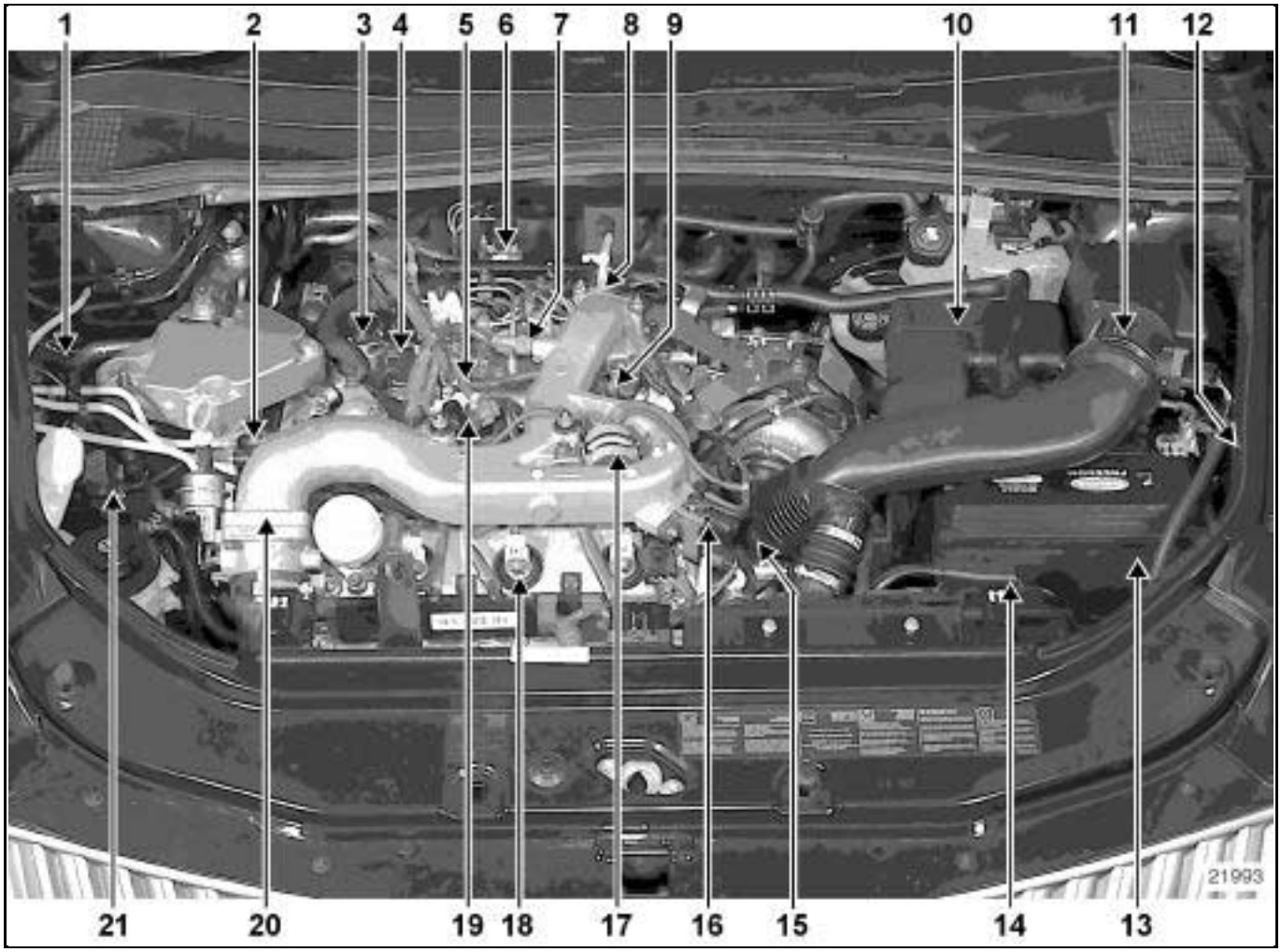

1 Priming bulb
2 Cylinder marking sensor
3 Exhaust gas recirculation valve
4 Turbocharging pressure sensor
5 Injector rail
6 Thermoplunger unit
7 Air temperature sensor
8 Diesel fuel temperature sensor
9 Turbocharging pressure regulation position sensor
10 Relay/fuse box
11 Air flowmeter
12 Power computer
13 Injection computer
14 Automatic transmission computer
15 Coolant temperature sensor
16 Turbocharging pressure regulating solenoid valve
17 Vacuum canister
18 Solenoid injector
19 Damping unit control solenoid valve
20 Damper unit
21 Diesel filter

GETtheMANUALS.org

1 Priming bulb
2 Diesel filter
3 Diesel fuel heater

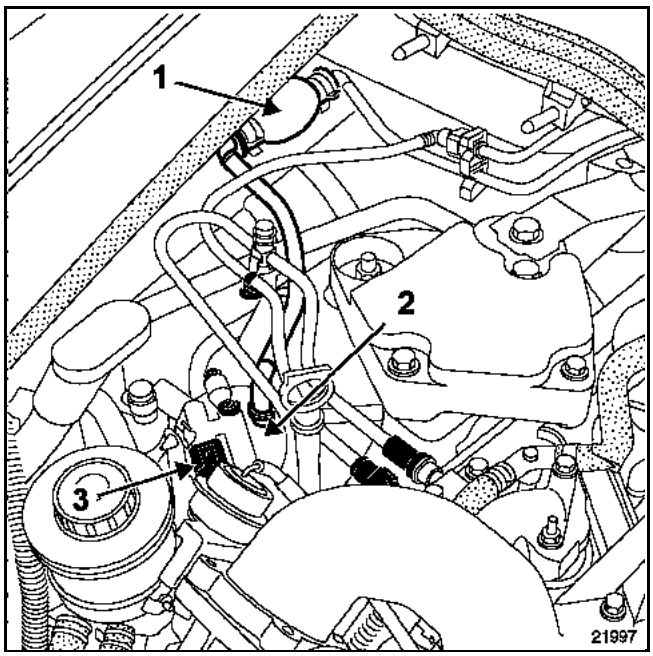

4 Injector rail
5 Pressure limiter
6 Rail pressure sensor

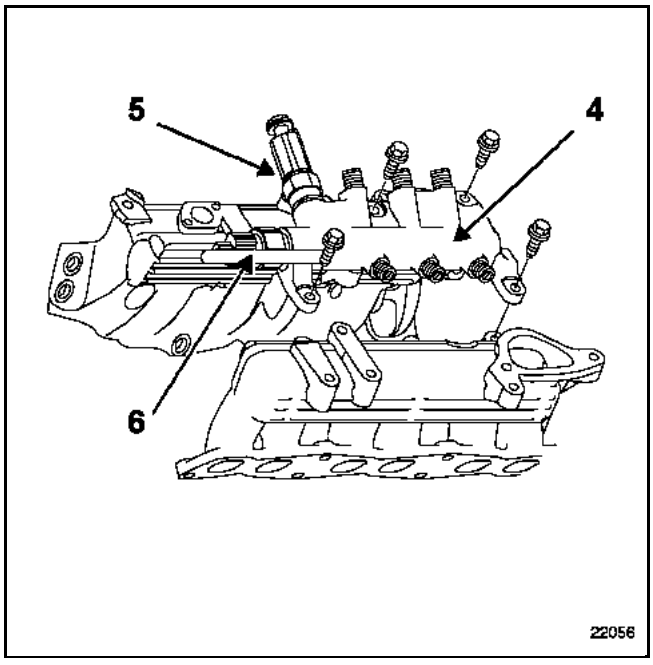

7 Diesel fuel temperature sensor

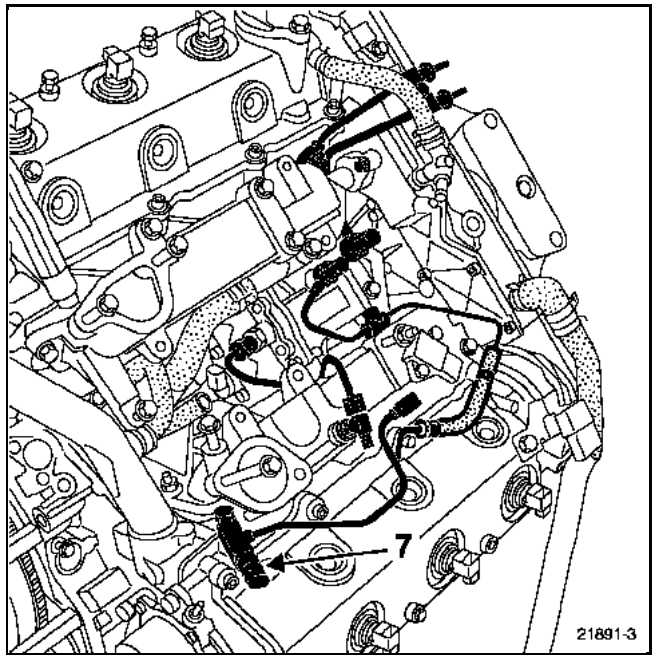

8 High pressure injection pump
9 Pressure regulators

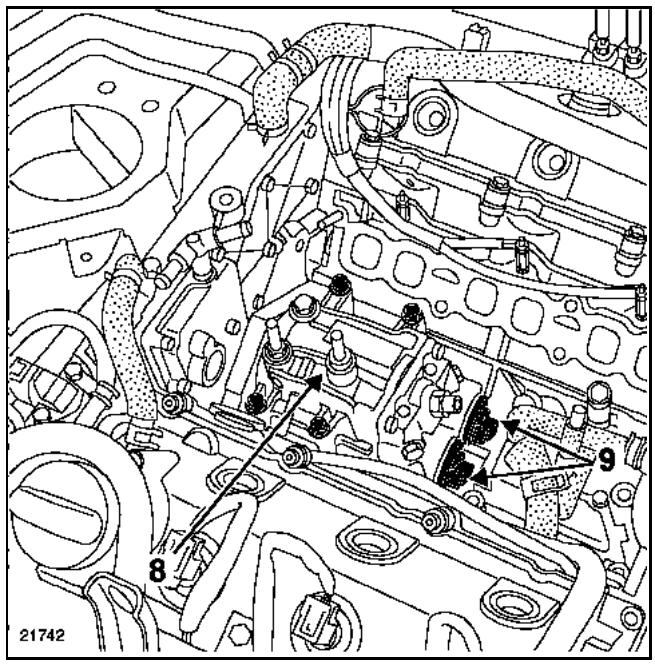

GETtheMANUALS.org

10 Air temperature sensor
11 Damping unit control solenoid valve
12 Wastegate position sensor
13 Turbocharging pressure regulating solenoid valve
14 Vacuum canister
15 Damper unit

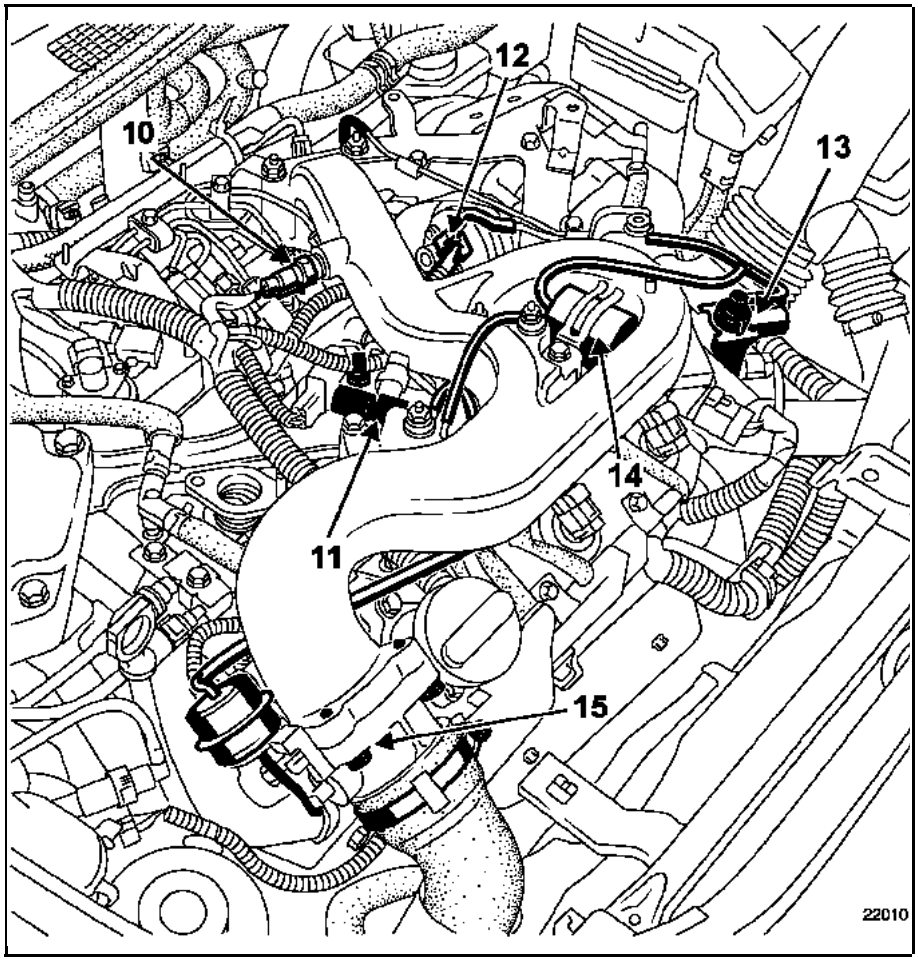

16 Coolant temperature sensor

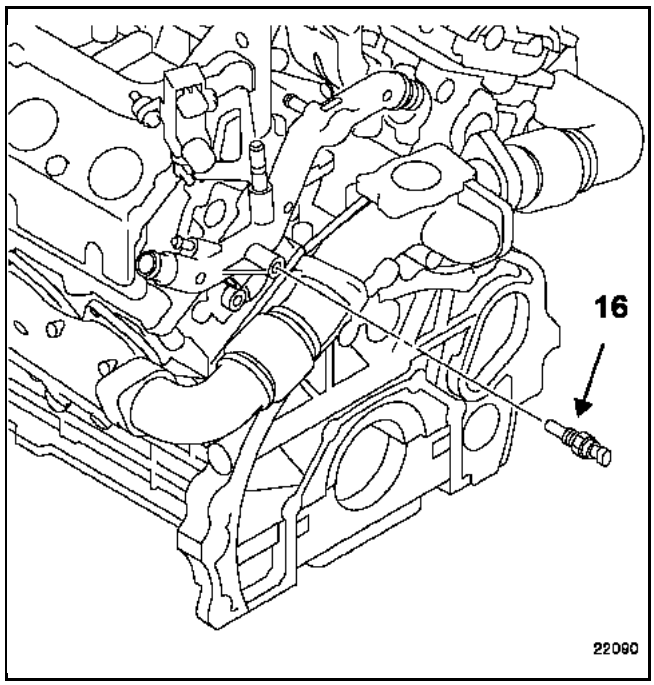

GETtheMANUALS.org

17 Exhaust gas recirculation valve
18 Cylinder marking sensor
19 Turbocharging pressure sensor

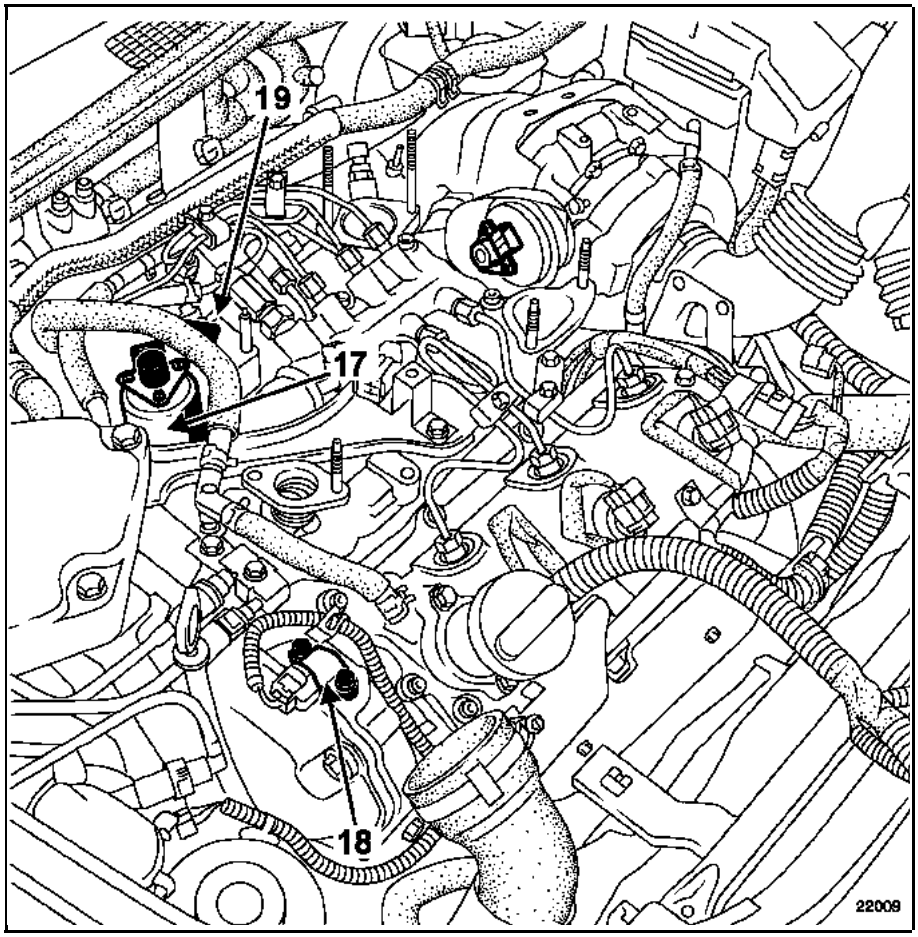

20 Engine speed sensor

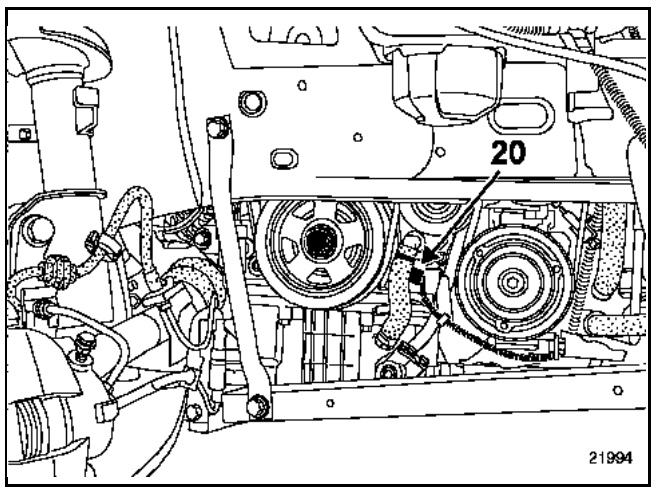

GETtheMANUALS.org

21 Pre-postheating unit

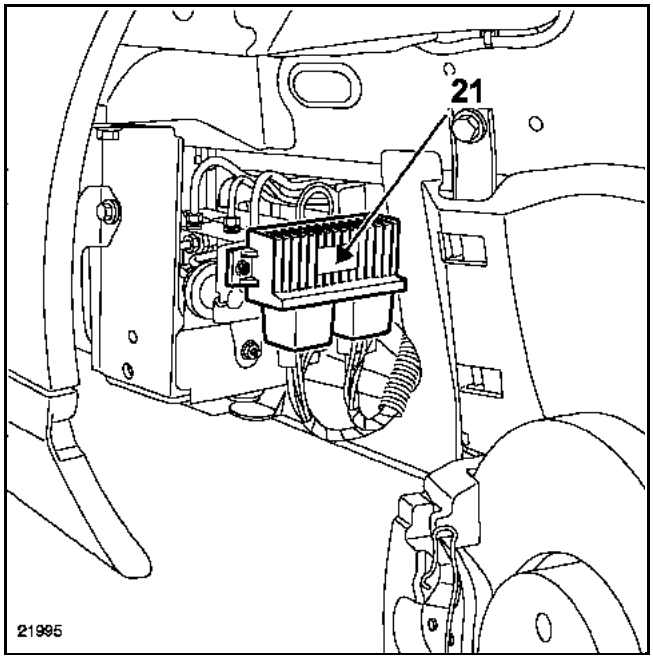

22 Injection computer

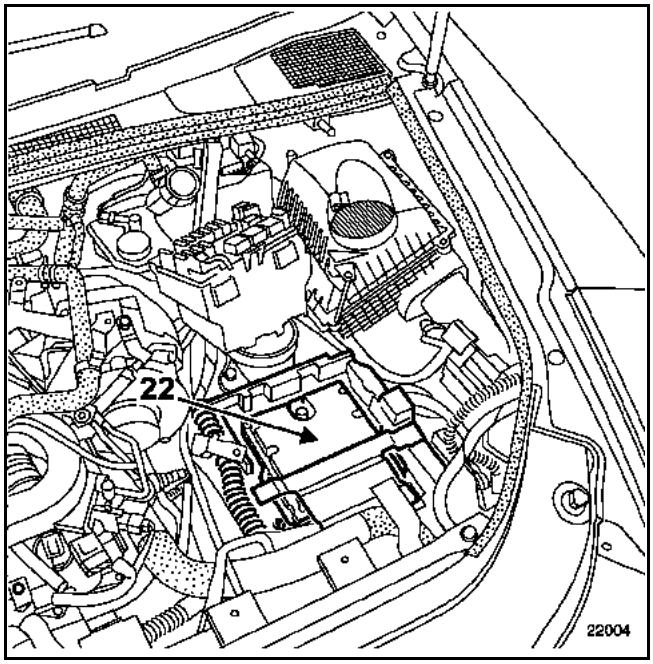

23 Power computer

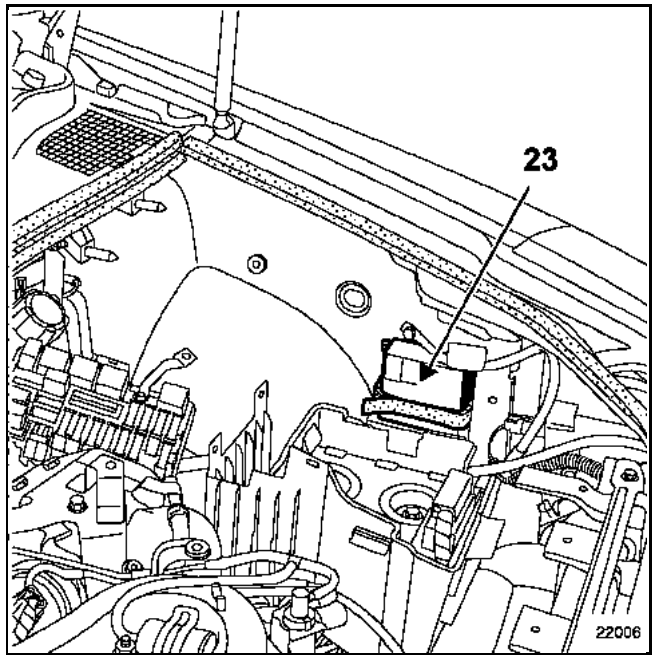

24 Main injection relay

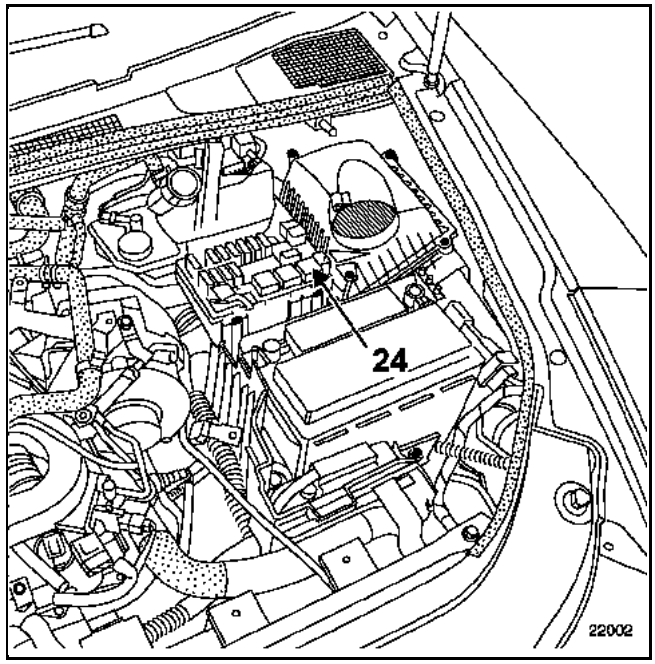

GETtheMANUALS.org

25 Injectors (front row)

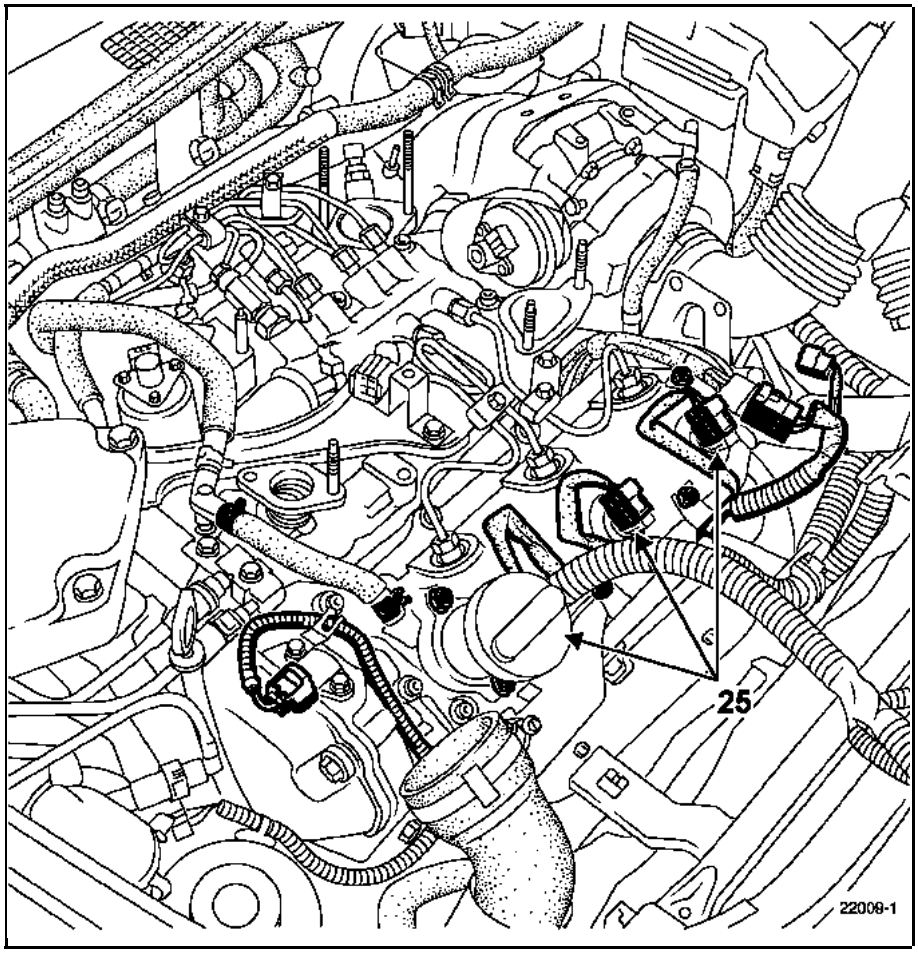

26 Thermoplunger unit

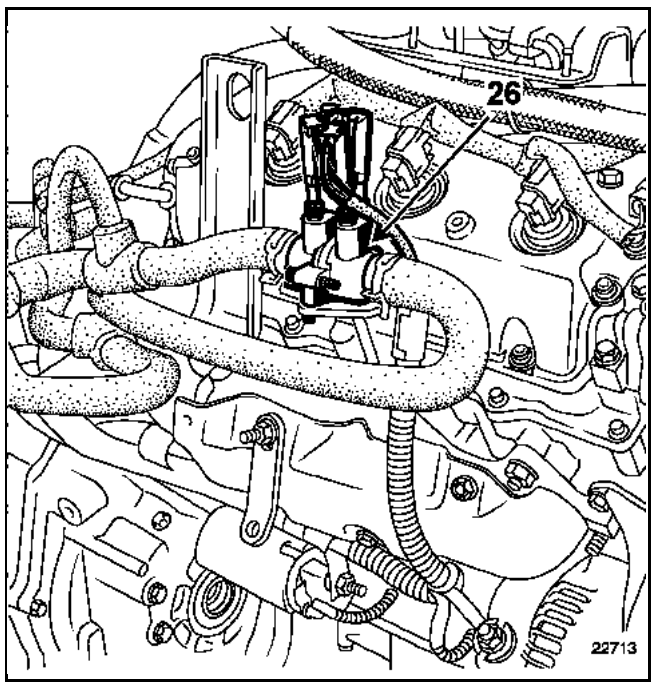

GETtheMANUALS.org

27 Air flowmeter

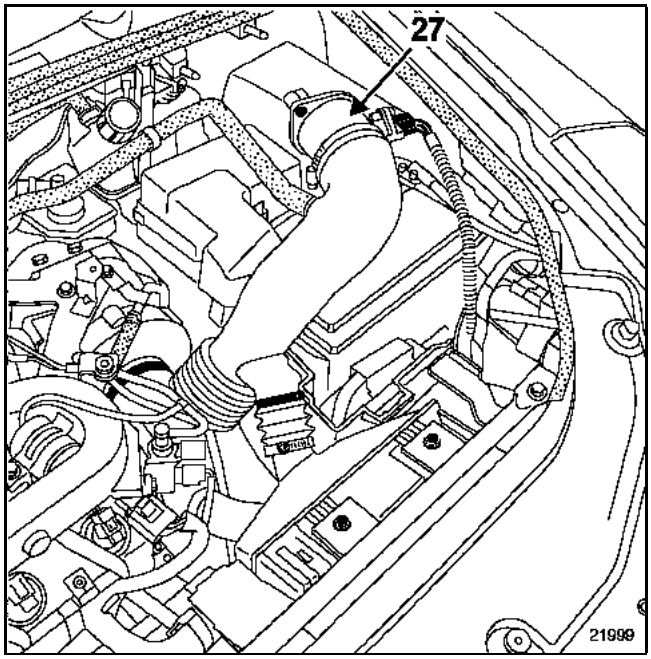

GETtheMANUALS.org

DISMANTLING THE PUMP INTERNAL COMPONENTS IS PROHIBITED

SPECIAL TOOLING REQUIRED	
Mot. 1536	TDC setting rod
Mot. 1566	Tool for removing and refitting the high pressure pipes
Mot. 1548	G9T engine high pressure pump pulley extraction tool
Mot. 1503	Tool for fitting the rubber pads

EQUIPMENT REQUIRED
High pressure pipe wrench (for example, Facom DM 19 wrench) Socket for tightening high pressure pipe (for example, Facom "Crowfoot 18-17") Low torque wrench

TIGHTENING TORQUES (in daNm)	
High pressure pipe	
– on the injectors:	2.5
– on the pump:	2.7
– on the rail:	2.7
High pressure pump mounting	3
High pressure pump sprocket nut	9
the exhaust gas recirculation pipe bolt ().	2.5
High pressure pump rear mounting bolt	3

WARNING:
Before carrying out any work, plug in the After Sales fault finding tool, establish dialogue with the injection computer and check that the injector rail is depressurised.

Take note of the fuel temperature.

GETtheMANUALS.org

YOU MUST OBSERVE THE CLEANLINESS ADVICE GIVEN IN THIS SECTION

REMOVAL

Disconnect the battery.

Remove:
– the intercooler - damping unit air hose (1) by disconnecting the turbocharging pressure sensor (2),

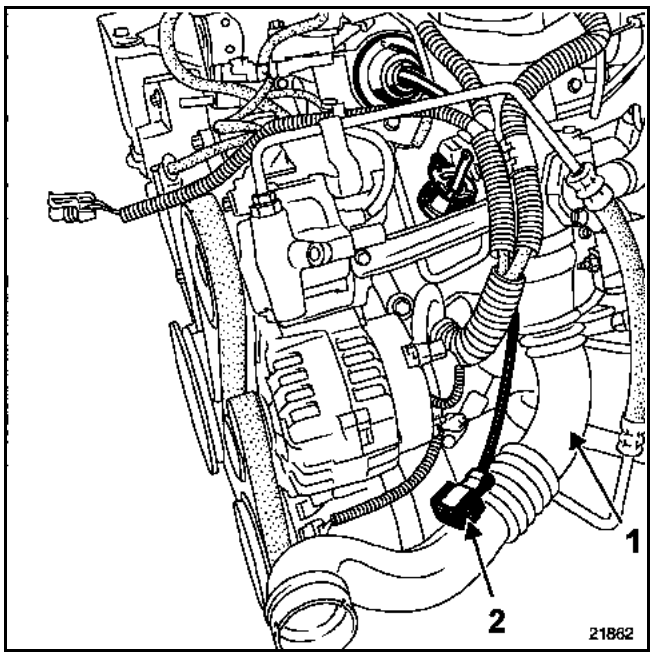

– the exhaust gas recirculation pipe (3) and its seals. Replace the pipe and the seals when refitting.

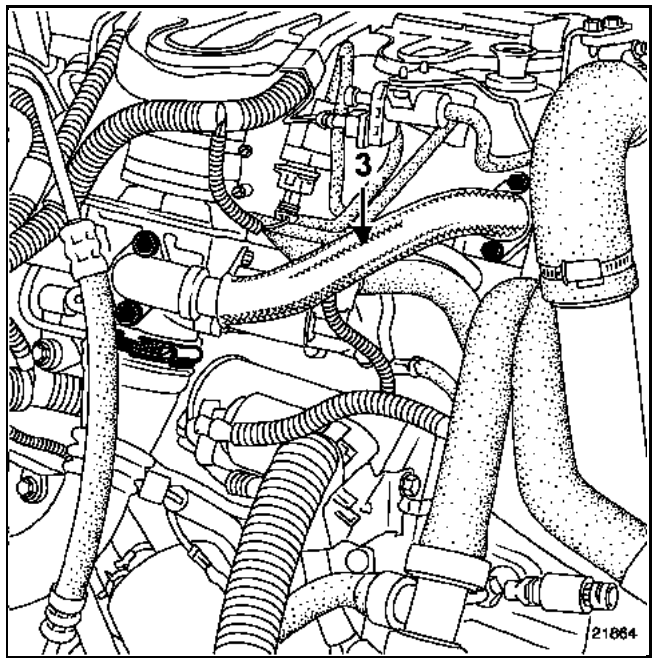

– the stiffening bracket (4) between the damper unit and the power assisted steering pump.

Disconnect the exhaust gas recirculation control solenoid valve connector.

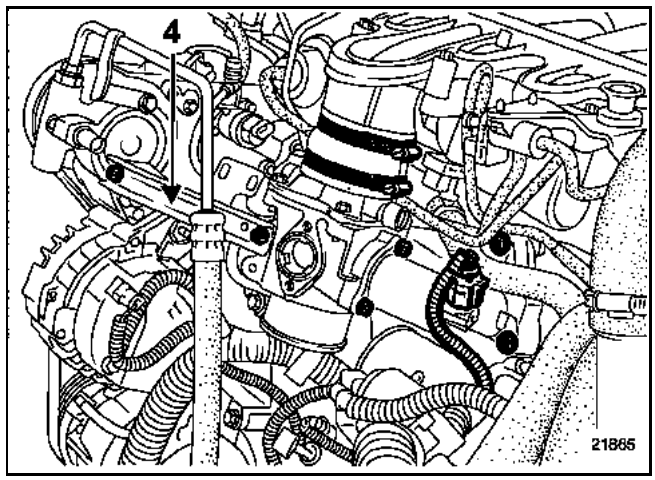

GETtheMANUALS.org

Remove:
– the damper unit mounting bolts (5),
– the connection pipe (6) with the inlet manifold.

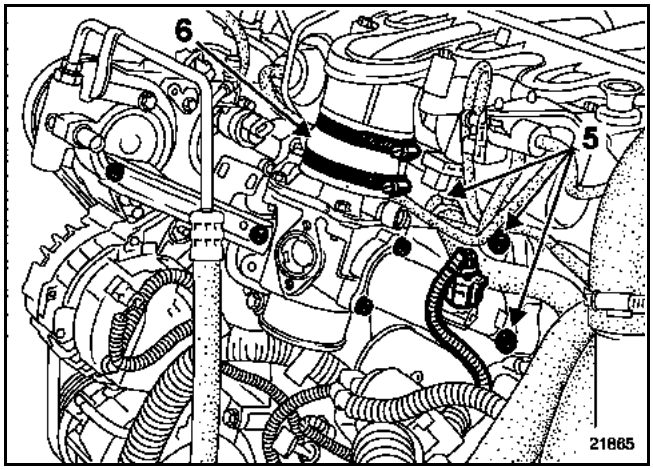

Remove the diffuser unit by disconnecting the hoses from the vacuum reservoir.

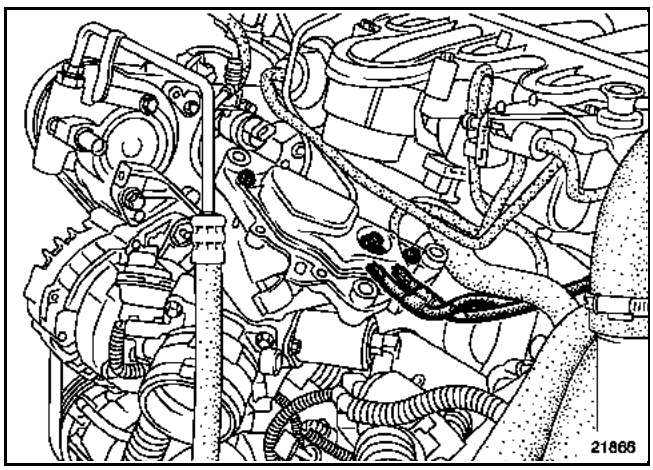

Remove the rear high-pressure pump support (A).

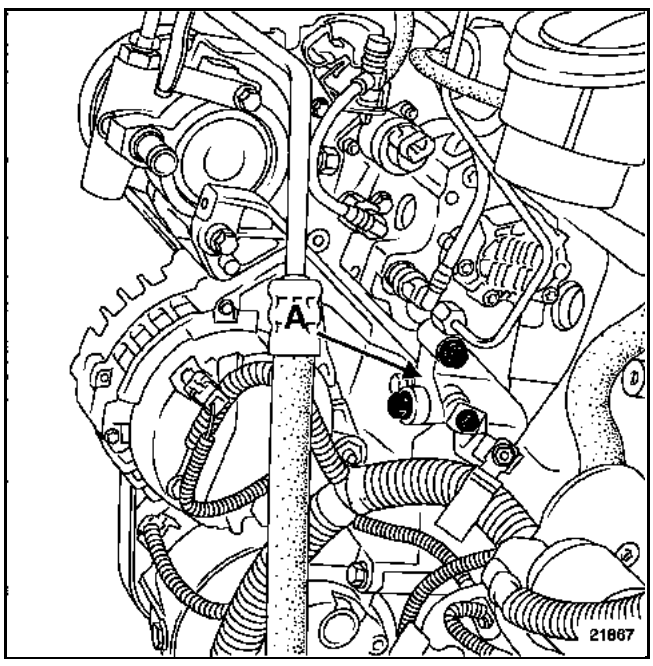

Set the engine to top dead centre using pin **Mot. 1536**.

Disconnect:
– the high pressure regulator (7),
– the diesel fuel temperature sensor,
– the fuel return pipe (8) and the fuel supply pipe (9) on the pump, then fit the blanking plugs.

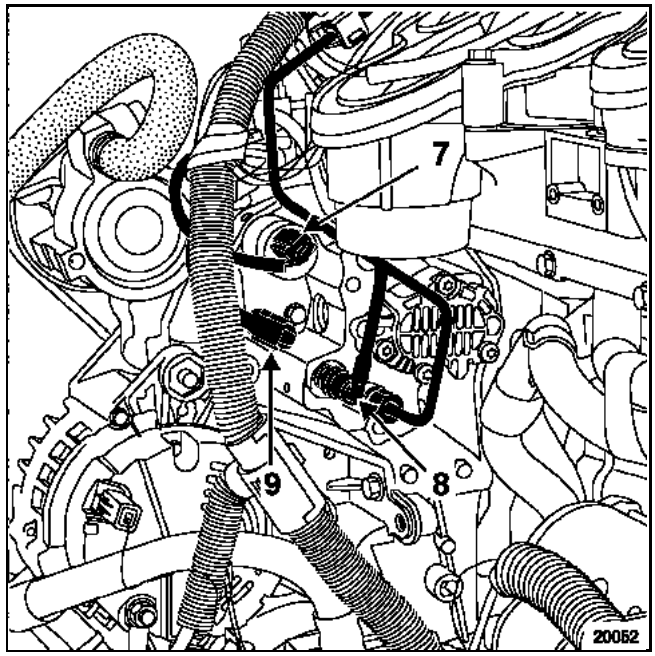

Unclip the rail protector and move it as far away as possible.

Remove the pump outlet/rail inlet high pressure pipe and fit the sealing plugs.

Unclip and move aside the power assisted steering oil reservoir, remove the diesel filter and then remove the supports for these items.

GETtheMANUALS.org

Remove:
– the position sensor (10) taking care not to drop the O-ring into the timing gear housing,
– the pump hub cover plug (11).

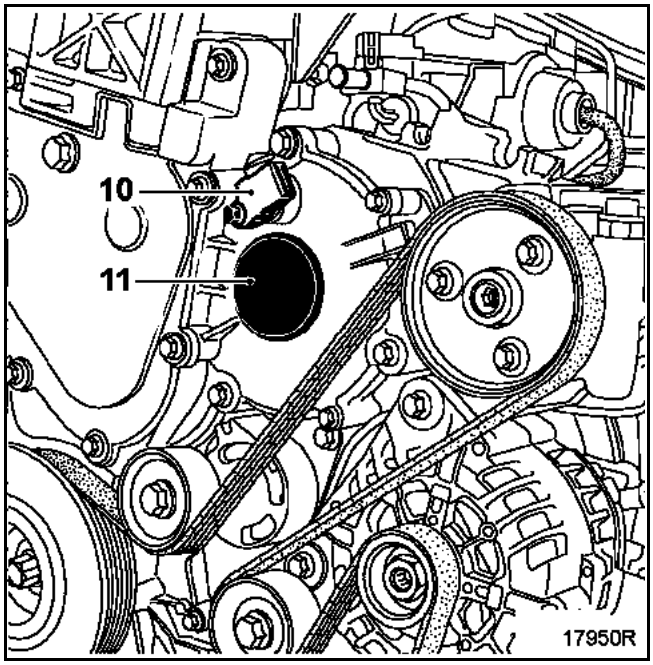

Fit tool **Mot. 1548**, using the central dowel, then remove the central dowel once the tool is in place.

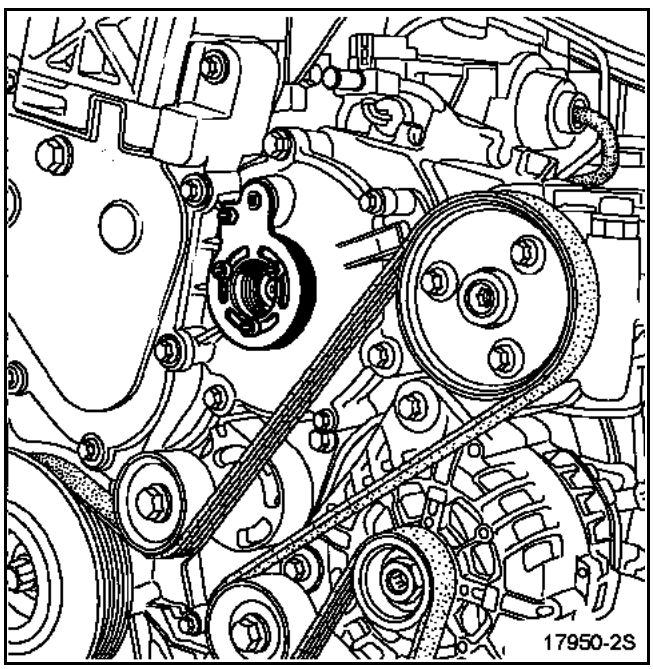

Remove the TDC setting pin **Mot. 1536**.

Remove the pump hub central mounting nut, locking the flywheel using a large screwdriver.

Loosen the three mounting bolts (12) on the multifunction support pump by a few turns.

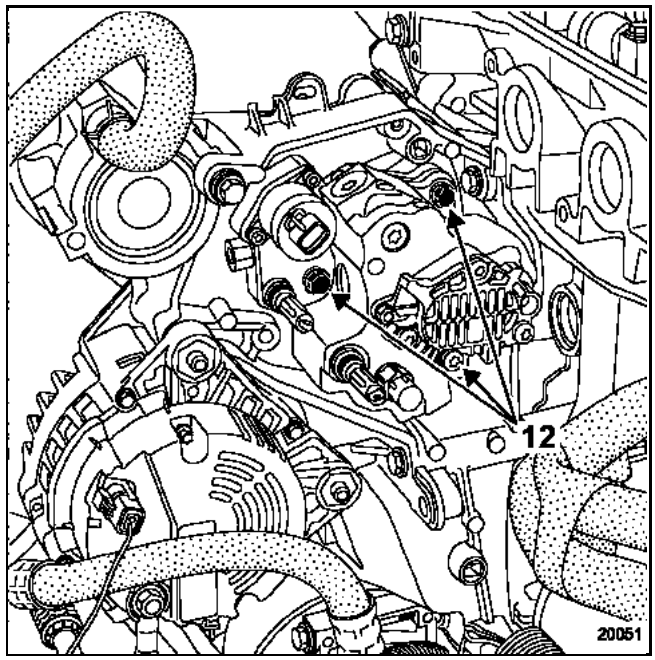

Drive out the pump by tightening the dowel on tool **Mot. 1548**.

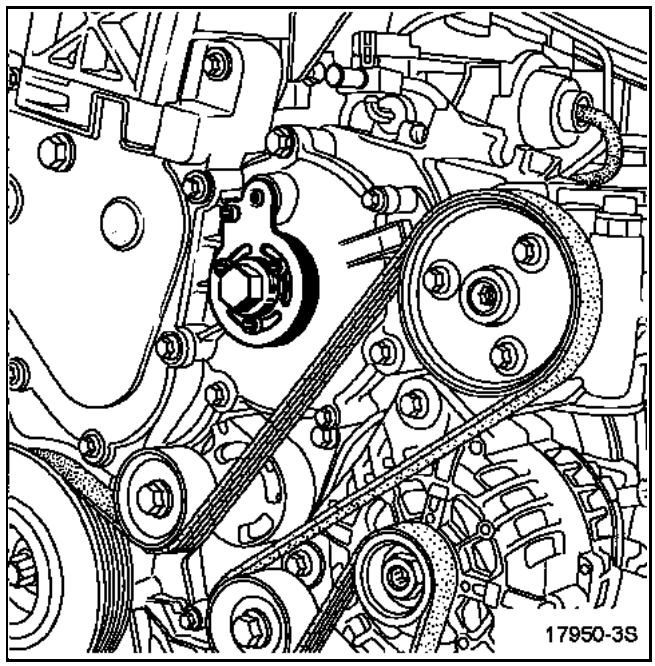

Remove the pump mounting bolts, then the high pressure pump.

GETtheMANUALS.org

REFITTING

Proceed in the reverse order to removal using the central nut to engage the new pump.

Check that the rear pump mounting holes are in the correct position.

Refit a new pump hub cover plug using tool **Mot. 1503** having adjusted it first.

Mot. 1503 tool adjustment:

Make a flat surface **X = 17 mm by Y = 40 mm**.

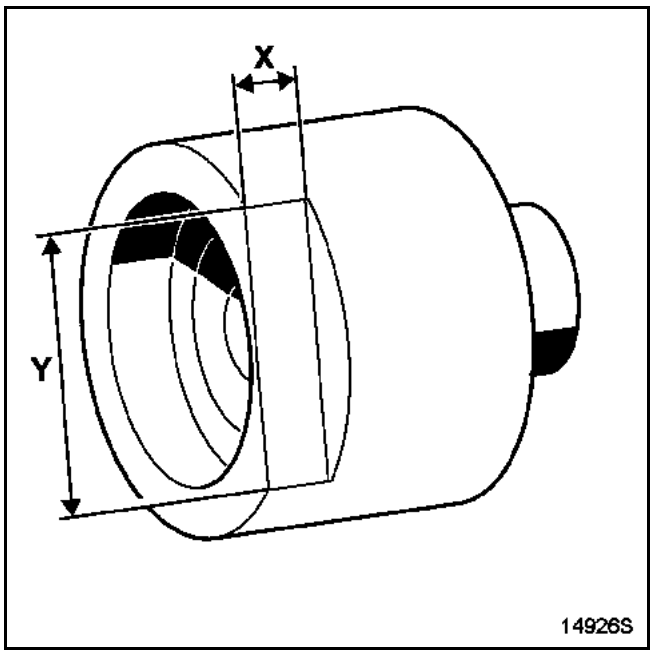

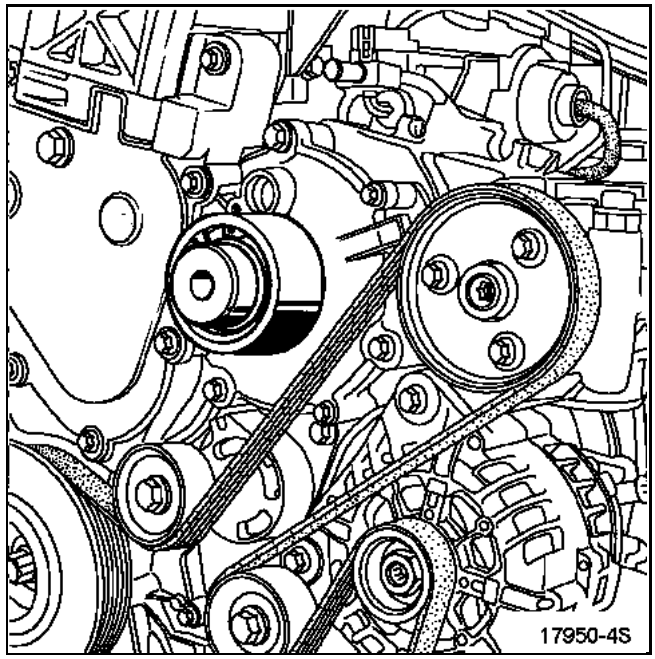

NOTE:
Be careful not to place the high pressure pipe under stress. To do this:
– loosen the high pressure rail,
– finger-tighten the high pressure pipe nuts to the pump and rail before tightening them to torque,
– tighten the rail to torque,
– tighten to the correct torque on the pump side,
– tighten to the correct torque on the rail side.

You must replace the fuel return pipe if it has been removed.

GETtheMANUALS.org

Before starting the engine, reprime the fuel circuit.
– Operate the low pressure pump by switching on the ignition several times, or with the fault finding tool using the **Actuator Commands** menu.
– Start the engine.

After carrying out any work, check that there are no leaks in the diesel circuit.
Proceed as follows:
– run the engine at idle speed until the engine cooling fan starts up,
– accelerate several times with no load,
– carry out a road test,
– switch the ignition off and check that there is no diesel fuel leakage,
– check that the absorbent soundproofing pads are not saturated with diesel fuel.

Check that there are no stored faults using the fault finding tool. Clear them if necessary.

GETtheMANUALS.org

DISMANTLING THE PUMP INTERNAL COMPONENTS IS PROHIBITED

SPECIAL TOOLING REQUIRED	
Mot. 1367-02	Lower engine support
Mot. 1376	Pin for immobilising flywheel.
Mot. 1651	Tool for fitting crankshaft seal, timing end.
Mot. 1653	Tool for fitting high pressure pump seal
EQUIPMENT REQUIRED	
"lorry" series 24 mm socket and sliding handle	

TIGHTENING TORQUES (in daNm)	
High pressure pump bolt	2.1
Timing intermediate pinion bolts	3.5
Pinion housing mountings	2.5
Crankshaft accessories pulley bolts	23.5
High pressure union bolt on the inlet manifold	2.1
High pressure pump gear mounting	16
Oil vapour recirculation pipe: M6 bolt	1
M8 bolt	2.5

IMPORTANT:
Before any operation, connect the After-Sales fault finding tool, establish dialogue with the injection computer and check that the injection rail is no longer under pressure.

Wait until the fuel temperature drops.

Order the special high pressure injection circuit caps kit.

GETtheMANUALS.org

REMOVAL

YOU MUST OBSERVE THE CLEANLINESS ADVICE

NOTE:
All high pressure pipes removed must be replaced as a matter of course.

Remove the inlet manifolds (see section **12A Fuel mixture "Inlet manifold"**).

From the side

Disconnect the front right hand driveshaft, and to do this:
– remove the driveshaft nut,
– remove the driveshaft relay bearing flange,
– disconnect the track rod end,
– release the flexible brake pipe,
– remove the shock absorber base bolts.

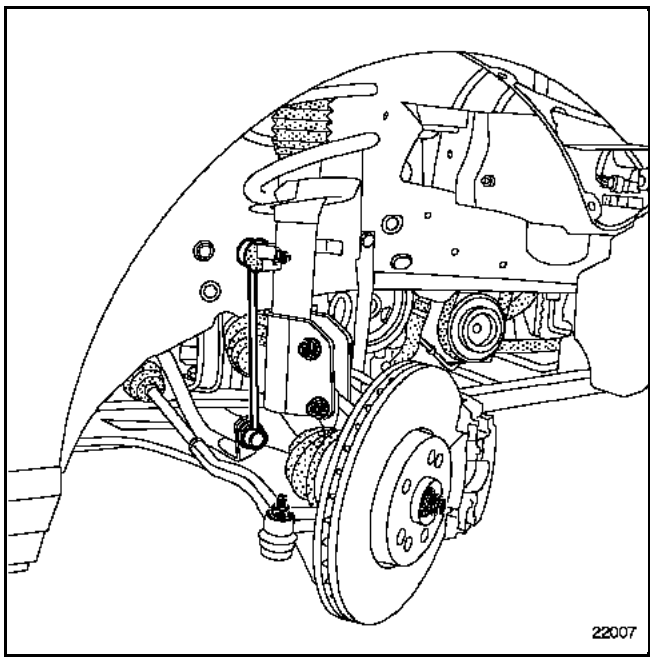

Remove:
– the accessories belt (see Section **07A Fan assembly values and adjustments: Accessories belt tension**),
– the accessories belt pulleys (1),
– the accessories belt tensioning device (2).

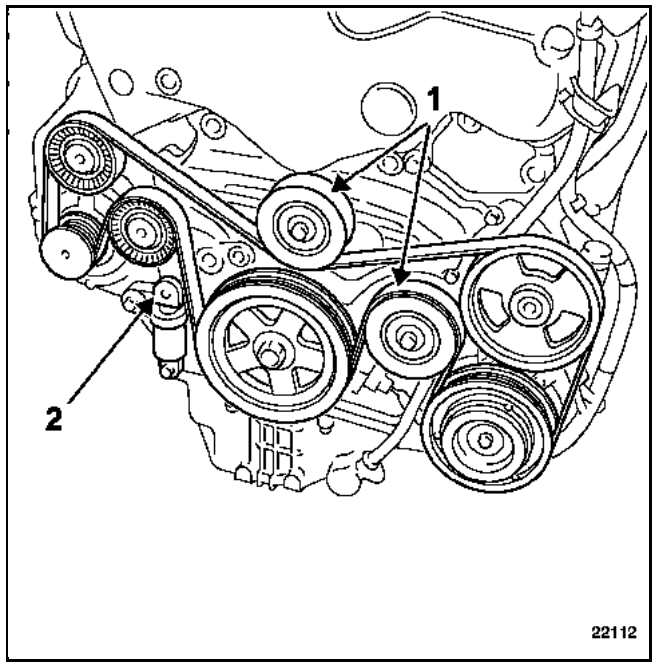

From below:

Remove the engine tie-bar mounting bolt on the engine.

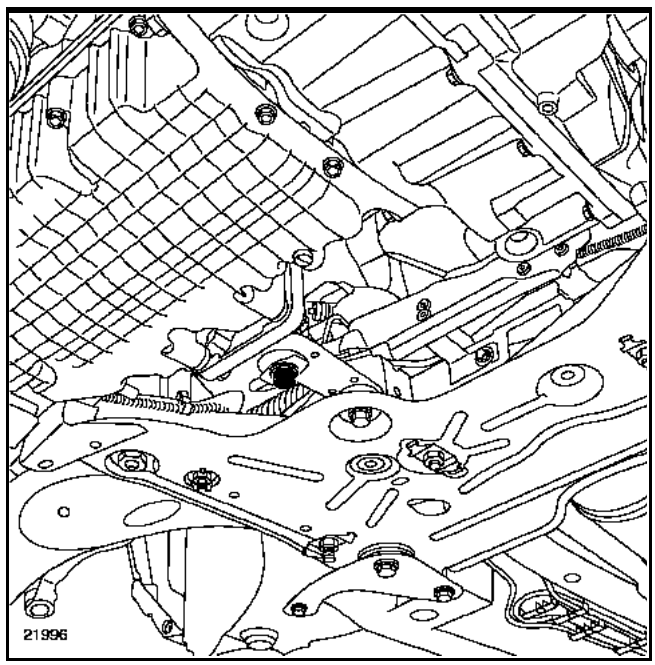

GETtheMANUALS.org

Remove the catalytic converter.

Lift the engine using the lifting tool.

From above:

Remove:
– the timing belt (see section **11A Top and Front of Engine: "Timing Belt"**),
– the pulleys (3),
– the tension wheel (4).

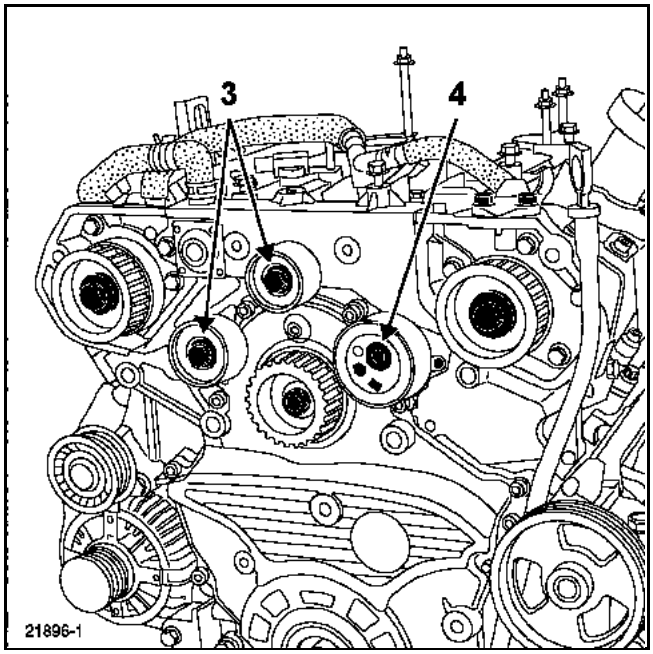

Using the lifting tool, lower the engine so as to be able to rotate the accessories pulley.

Ensure that the fixed and moving marks on the crankshaft accessories pulley are aligned.

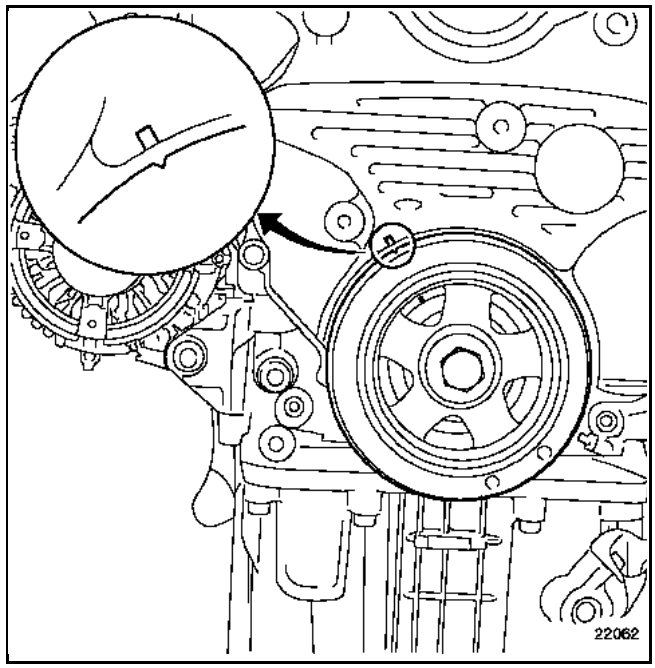

Gently rotate the crankshaft in an anti-clockwise direction to bring the engine to the pegging point (access hole in the converter bolts).

With the help of another operative, peg the engine using tool **Mot. 1376**.

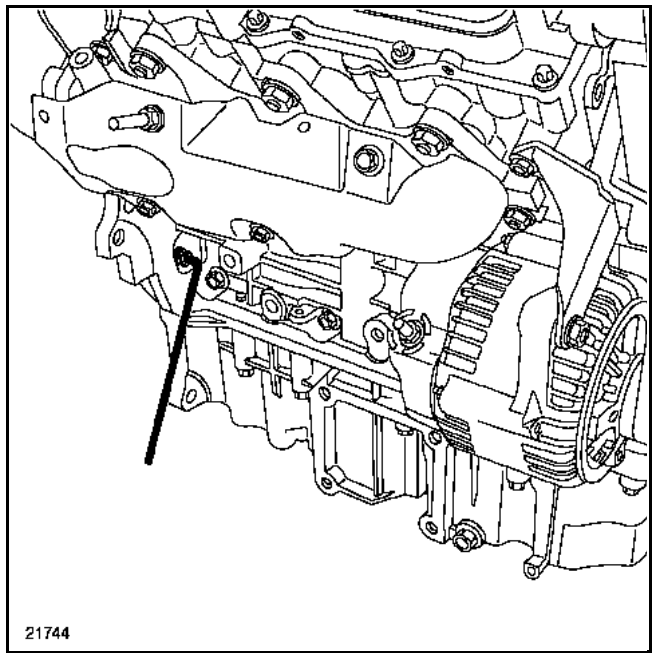

GETtheMANUALS.org

Undo:
– the crankshaft accessories pulley mounting bolt slightly,
– the high-pressure pump gear mounting nut (5).

Remove:
– the high-pressure pump gear,
– the engine locking tool **Mot. 1376**.

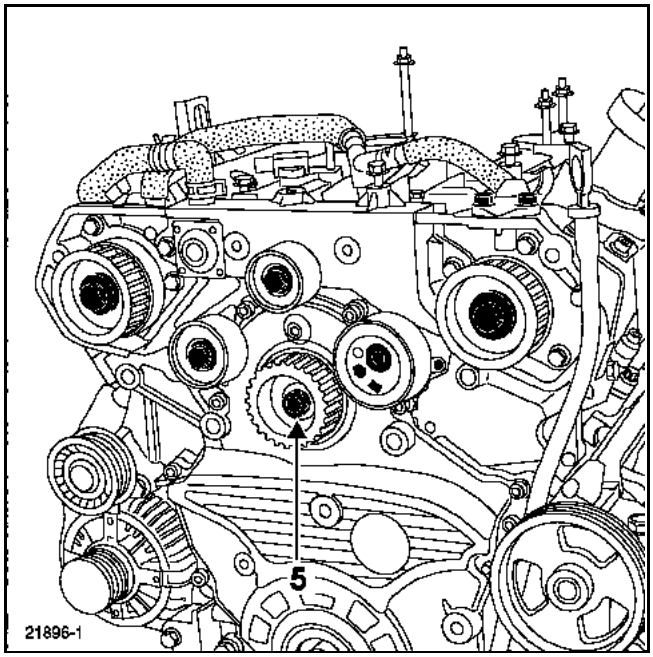

Rotate the engine to bring it back to Top Dead Centre.

Ensure that the fixed and moving marks on the crankshaft accessories pulley are aligned.

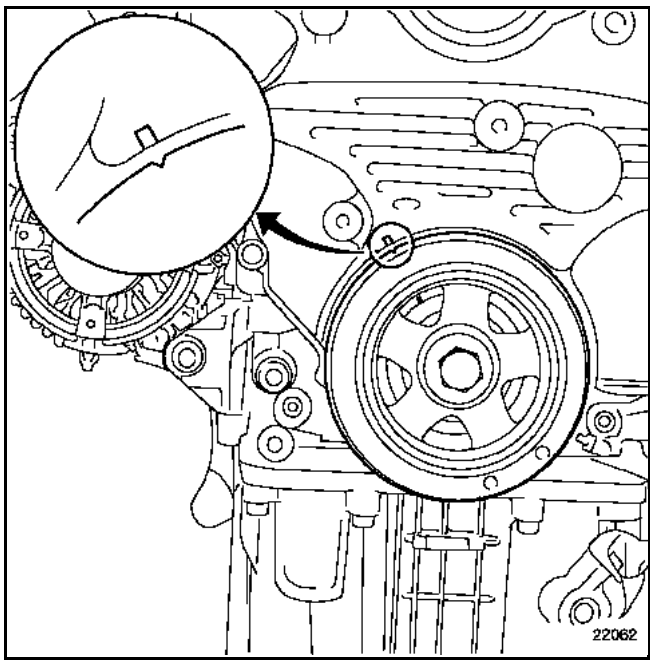

Completely undo the crankshaft accessories pulley mounting bolt.

Remove pulley (6).

Disconnect:
– the oil vapour recycling pipe (7) on the standard pinion housing,
– the engine speed sensor connector (8).

Remove the engine speed sensor.

Block the oil vapour recirculation pipe.

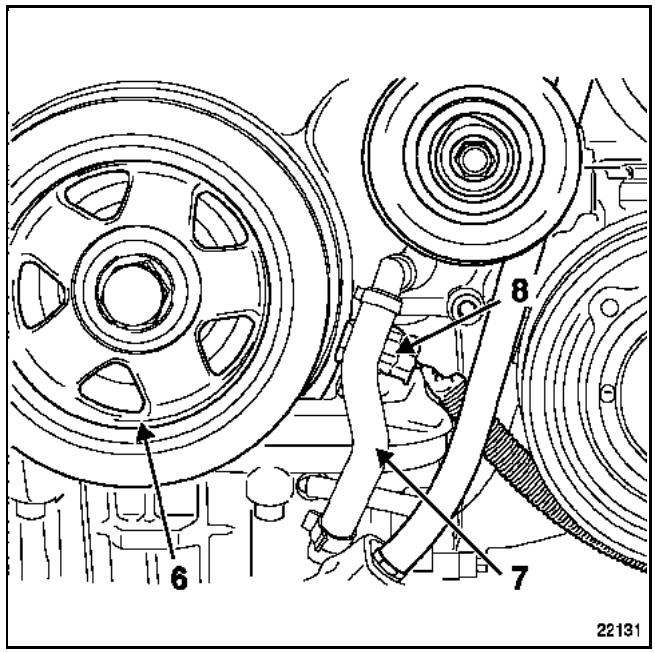

GETtheMANUALS.org

Undo then remove the standard pinion housing mountings.

Remove:
– the cap located at (B),
– the standard pinion housing.

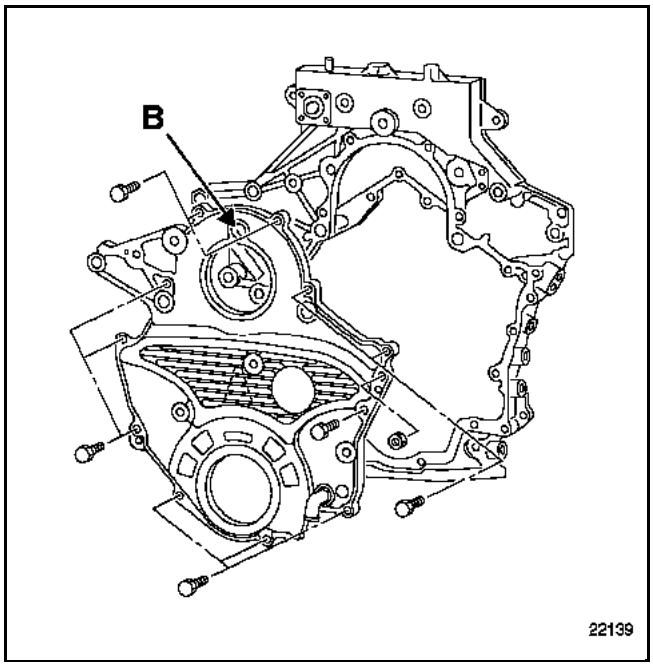

Screw two **M6 x 100**, **50 mm long** bolts into the high pressure pump pinion, so as to release the wear compensation system.

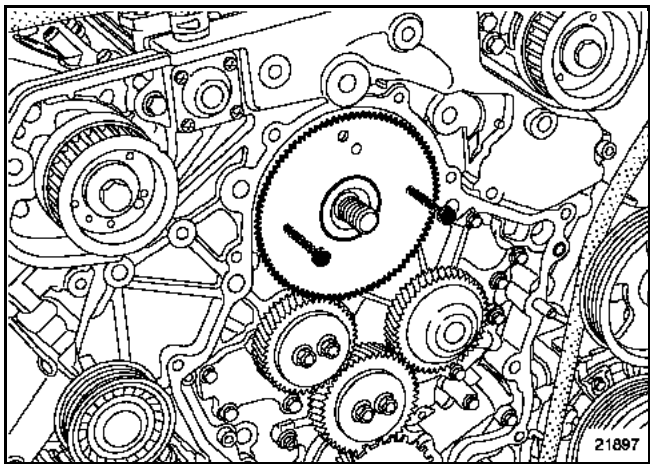

Retrieve the wear compensation spring.

Screw two **M6 x 100**, **50 mm long** bolts into the high-pressure pump pinion, so as to release it from the pump shaft.

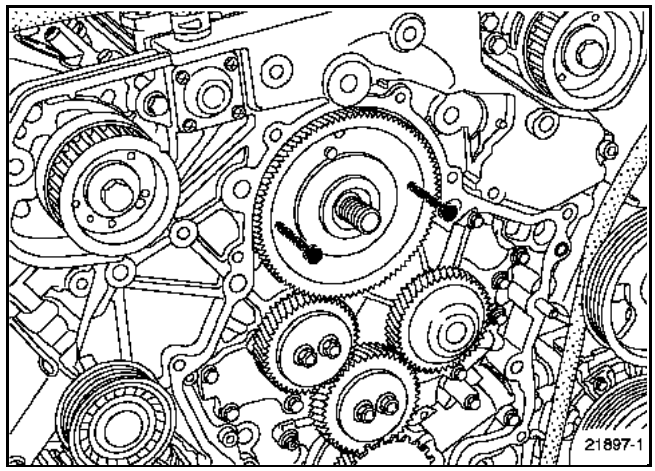

Remove the high-pressure pump mountings.

NOTE:
Mark the position of the pump mounting bolts.

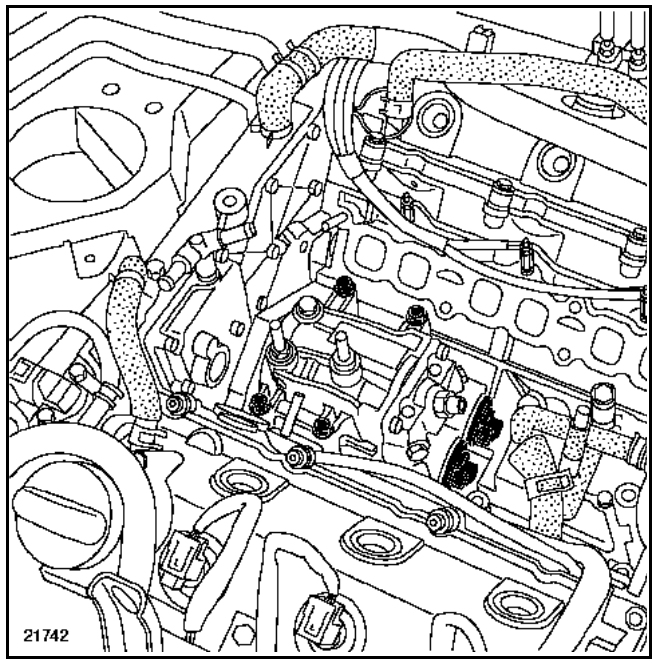

GETtheMANUALS.org

Release the pump from the engine.

Disconnect the two pressure regulators. Release the harness.

Remove the seal from the high-pressure pump.

CLEANING

It is very important not to scratch the gasket faces of any aluminium components.

Use **Décapjoint** to dissolve any part of the joint which remains cemented to the pinion housing.

Apply the product to the part to be cleaned, wait approximately ten minutes, then remove it using a wooden spatula.

GETtheMANUALS.org

REFITTING

Fit the pump with a new seal.

Fit:
– the pump centring bolts (1),
– the other mounting bolts.

Tighten the mounting bolts to a torque of **2.1 daNm**, distributing the torque evenly.

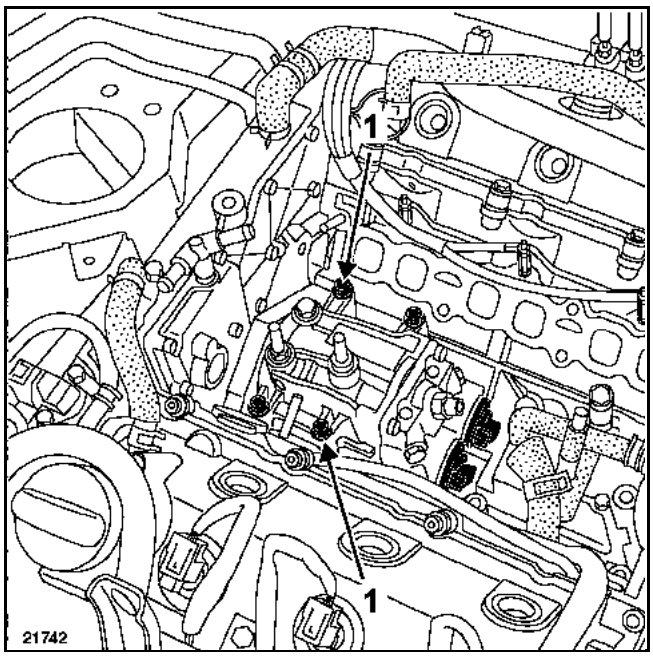

In a vice:

Match the pump gear with the wear compensation pinion. To do this:
– fit the spring in the pump gear,

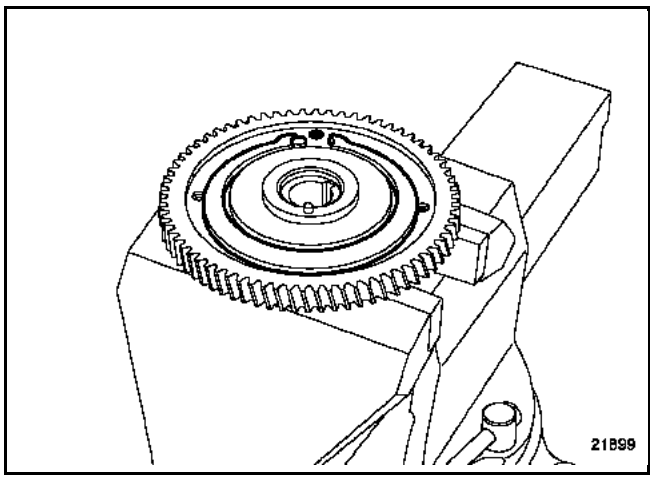

– screw two **M6 x 100**, **50 mm long** bolts into the wear compensation pinion,
– fit the wear compensation pinion into the pump gear,
– using a screwdriver, rotate the wear compensation device so as to align the teeth on the two pinions,
– secure the assembly using a **M6 x 100**, **15 mm long** slotted head screw.

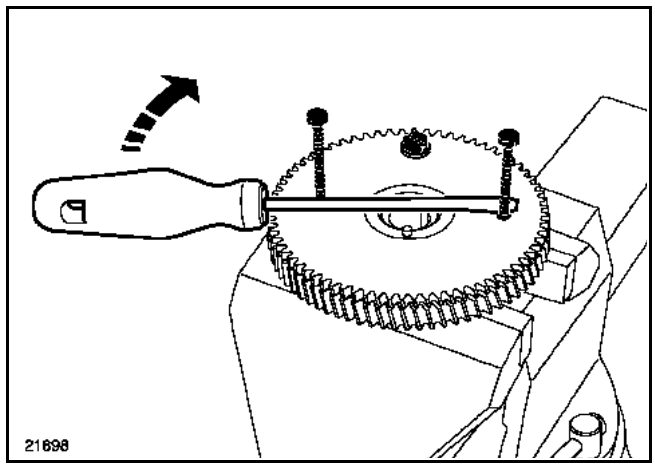

Remove the two **50 mm** bolts from the wear compensation pinion.

GETtheMANUALS.org

Remove the two intermediate pinions (1) and (2) from the pinion set.

Fit:
– the intermediate pinion (1) and align the marks in relation to the crankshaft sprocket,
– the intermediate pinion (2) and align the marks in relation to the intermediate pinion (1),
– the pump gear and align the marks in relation to the intermediate pinion (2).

Finger tighten the intermediate pinion mounting bolts then tighten them to a torque of **3.5 daNm**.

NOTE:
After tightening, ensure that the marks on the pinion set are correctly aligned.

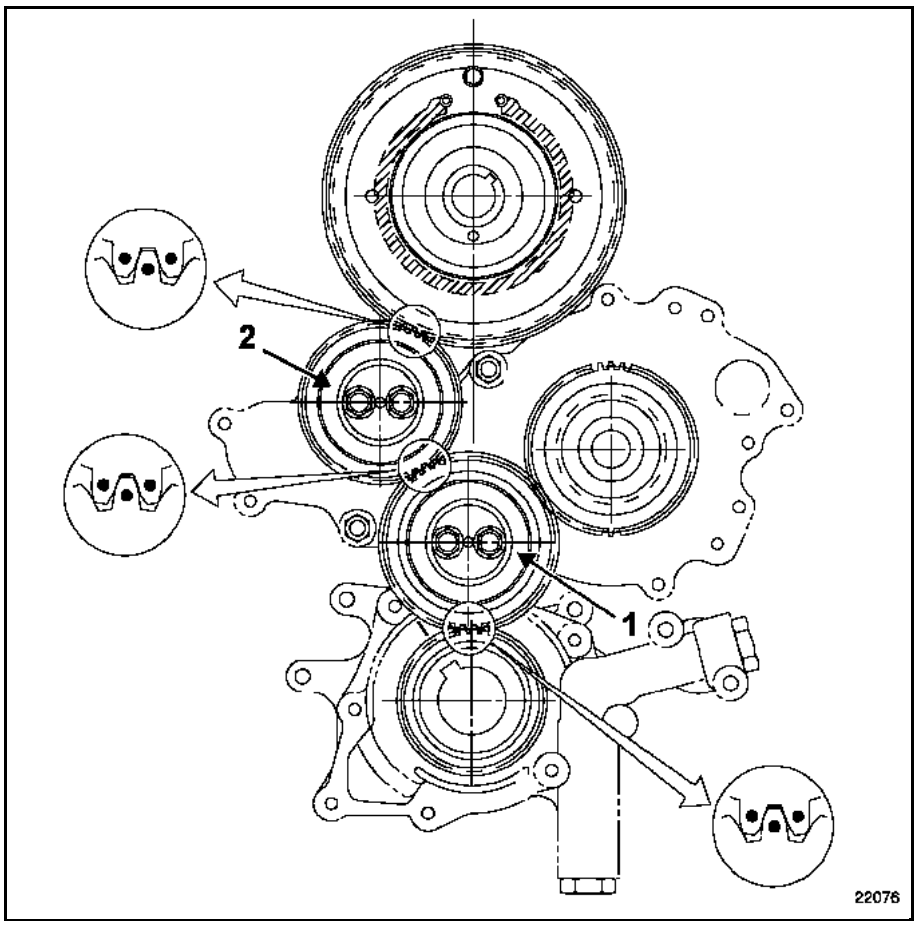

GETtheMANUALS.org

Clean and degrease the seal surfaces.

Remove the seals from the crankshaft accessories pulley and the high-pressure pump gear.

Apply a **3 mm** diameter bead of **THREEBOND** sealing paste to the pinion housing.

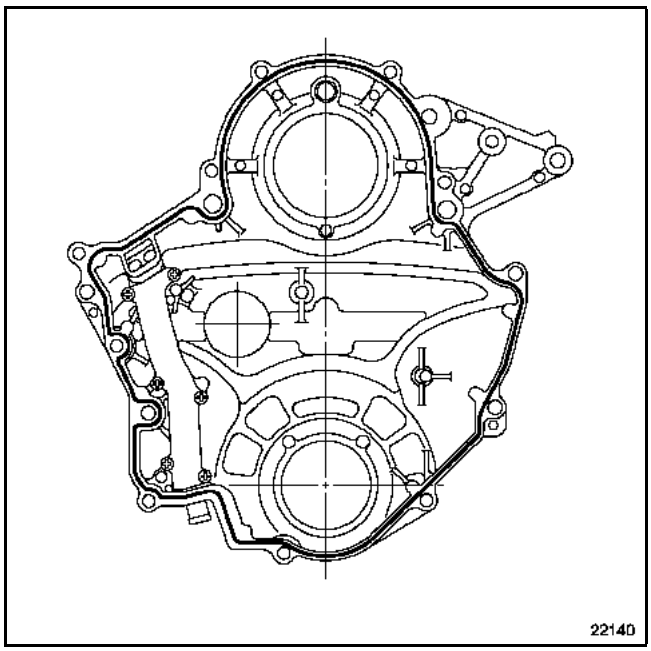

Fit the pinion housing on the centring pins then insert all the mounting bolts.

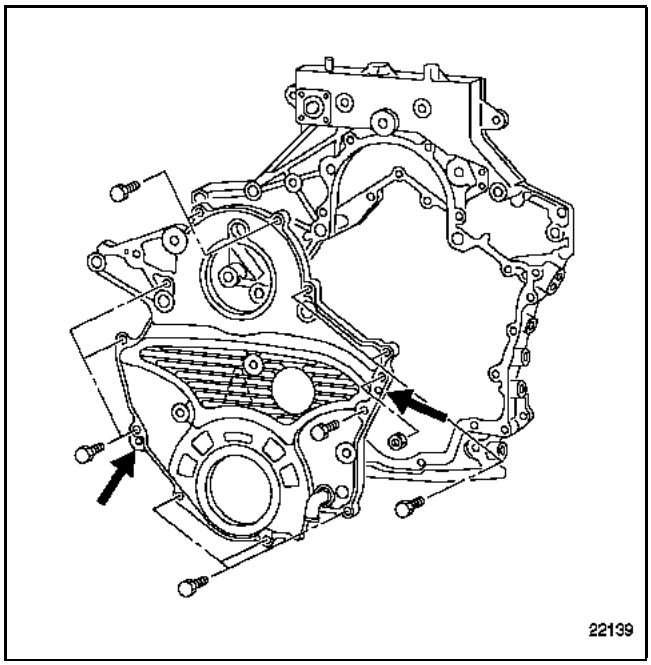

GETtheMANUALS.org

Tighten the bolts in order to a torque of **2.5 daNm**.

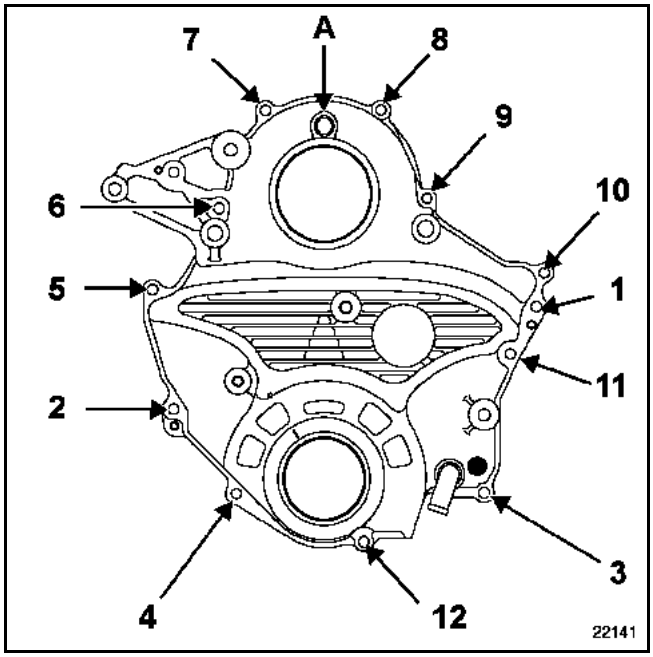

Remove the pump gear wear compensation securing bolt using a screwdriver at (A).

Refit the cap.

Fit a new seal:
– on the crankshaft accessories pulley using tool **Mot. 1651**,

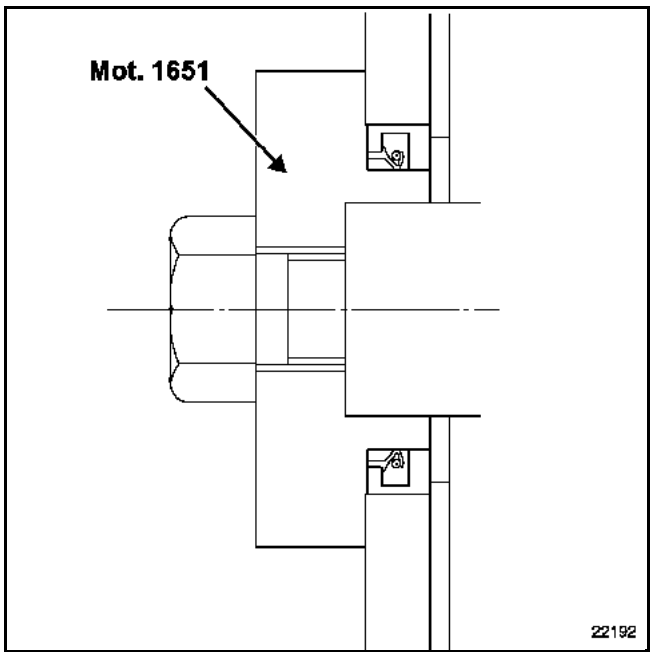

– on the high-pressure pump gear using tool **Mot. 1653**.

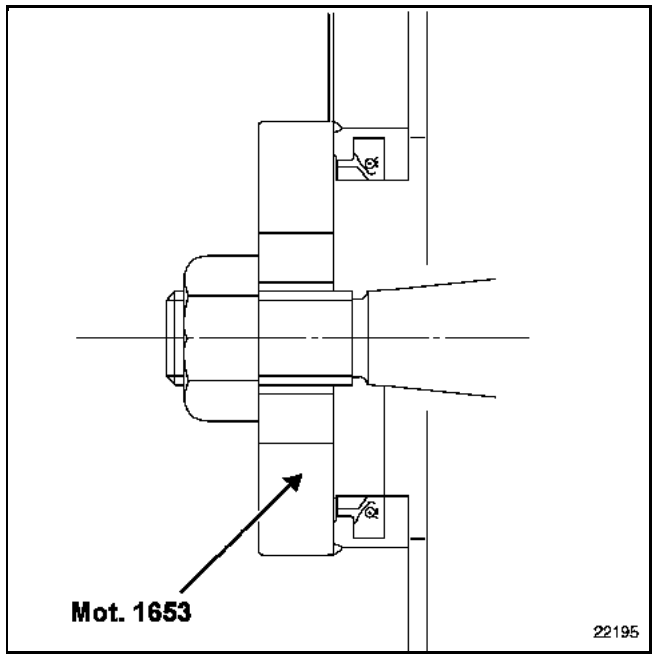

Fit:
– the crankshaft accessories pulley,
– the pump gear.

Fit the mounting bolt and nut.

Ensure that the fixed and moving marks on the crankshaft accessories pulley and the pump gear are aligned.

Gently rotate the crankshaft in an anti-clockwise direction to bring the engine to the pegging point.

GETtheMANUALS.org

With the help of another operative, peg the engine using tool **Mot. 1376**.

Tighten:
– the crankshaft accessories pulley mounting bolt to a torque of **23.5 daNm**,
– the pump gear mounting nut to a torque of **16 daNm**.

Remove the engine pegging tool **Mot. 1376**.

Rotate the engine to bring it back to Top Dead Centre.

Ensure that the fixed and moving marks:
– on the crankshaft accessories pulley (A),
– and the pump pinion (B) are aligned.

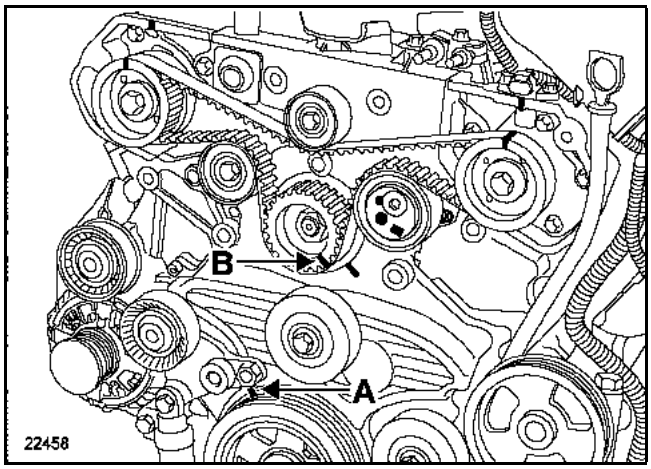

GETtheMANUALS.org

Refit:
– the pulleys,
– the tension wheel,
– install the timing belt (see section **11A Top and front of engine "Timing belt"**),
– the accessories belt tensioning device,
– the accessories belt pulleys,
– the accessories belt (see section **07A Engine and transmission assembly values and adjustments "Accessories belt tension"**)

Fit the front right hand driveshaft (see section **29A "Driveshaft"**).

NOTE:
Remove the blanking plugs at the last moment.

Refit then tighten loosely by hand:
– the new pump outlet high-pressure hose,
– the diesel supply and return pipes with new seals,
– the oil vapour recirculation pipe with a new seal,
– the diesel supply and return pipe bracket then the nuts on the pump,
– the return hose with the diesel temperature sensor.

Tighten the various diesel pipe unions to the correct torques (see diagram).

Refit the injector rail (see relevant operation in section **13B "Injector rail"**).

Refit in the reverse order to removal for the other refitting operations.

Reprime the diesel supply system using the priming bulb.

Adjust and bleed the cooling circuit (see section **19A Cooling "Filling bleeding"**).

Ensure there are no leaks in the high-pressure circuit after repair (see Section **13B Special notes**).

GETtheMANUALS.org

TIGHTENING TORQUES OF THE HIGH PRESSURE PUMP PIPES (in daNm)

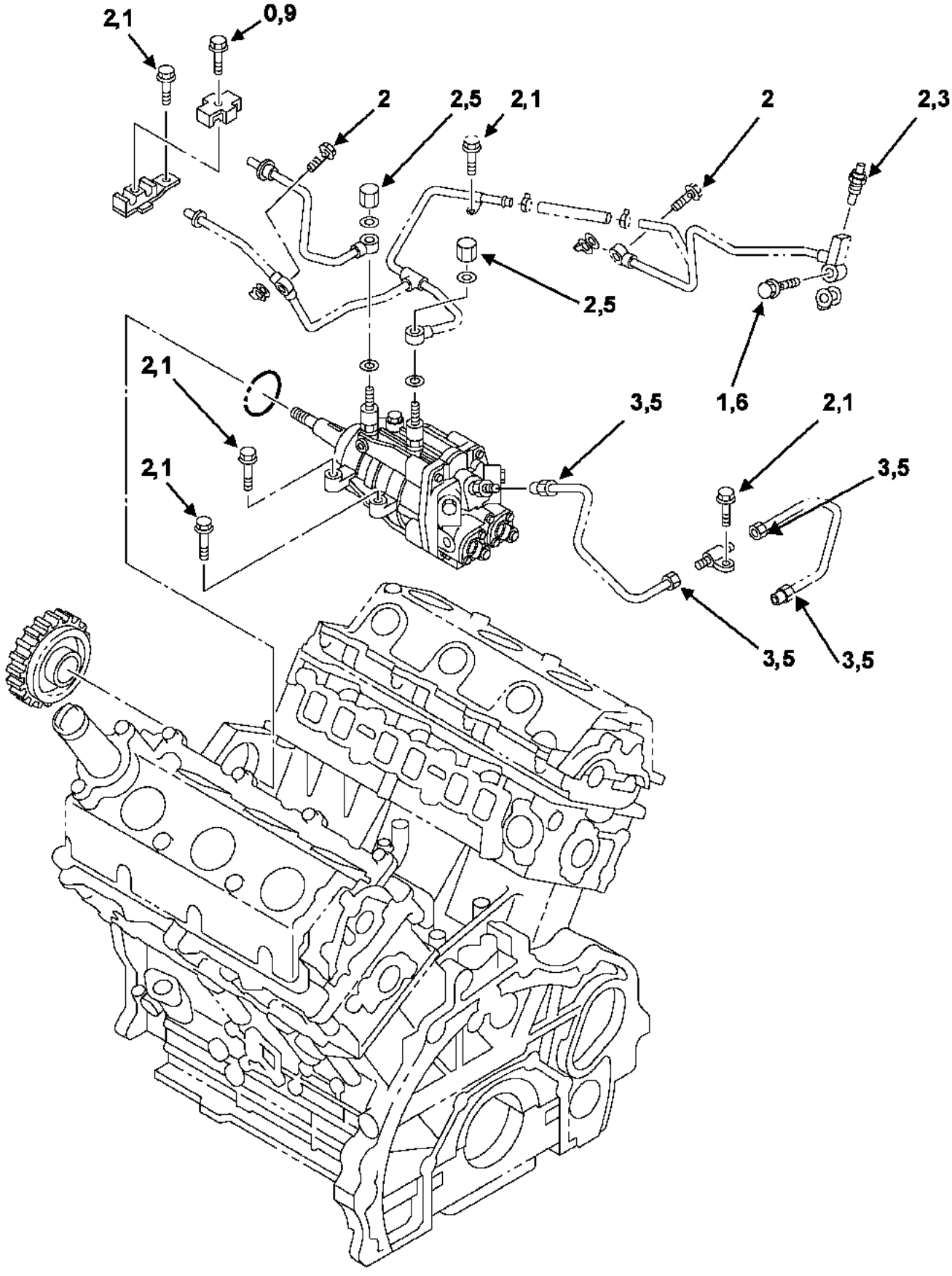

22099

GETtheMANUALS.org

SPECIAL TOOLING REQUIRED	
Mot. 1549	Injector extractor
Mot. 1566	Tool for removing and refitting the high-pressure pipes
EQUIPMENT REQUIRED	
Low torque wrench High pressure pip wrench (e.g. Facom DM 19 wrench).	

TIGHTENING TORQUES (in daNm)	
Injector bracket nut pretightening	0.6 ± 0.1
Injector bracket nuts on the flywheel end	360 ± 30°
Injector bracket studs	0.2 ± 0.05
High pressure pipe nuts	
– - on the injectors:	2.5
– on the pump:	2.7
– on the rail:	2.7
Injection rail mounting bolt	2.5
Rail-pump pipe bracket bolt	0.3

WARNING:
Before carrying out any work, plug in the After Sales fault finding tool, establish dialogue with the injection computer and check that the injector rail is depressurised.

Take note of the fuel temperature.

Order the special high pressure injection circuit caps kit.

REMOVAL

YOU MUST OBSERVE THE CLEANLINESS ADVICE

Disconnect the battery.

Unclip the side partitions of the rubber flap.

Unclip the rubber flap from the rocker cover and push it as far back as possible.

Remove the soundproofing material.

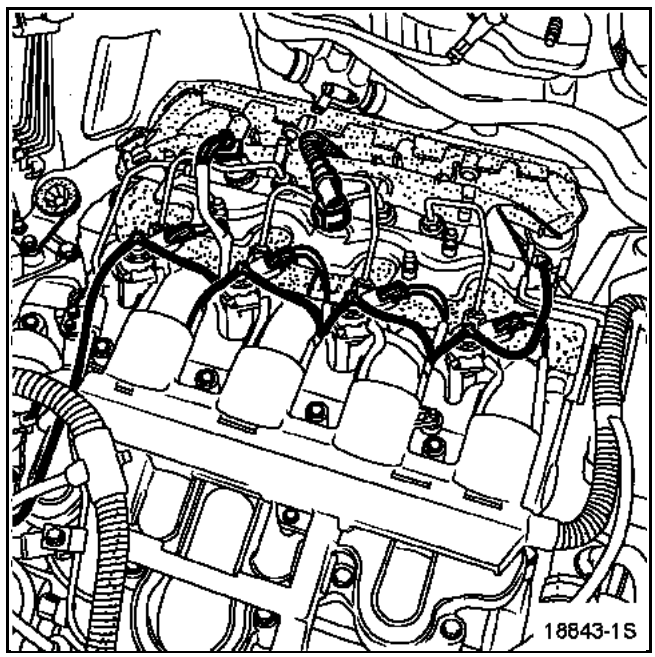

GETtheMANUALS.org

Disconnect the pressure sensor (1) and the injector wiring.

Remove:
– the injector diesel return pipe (2) (to be replaced),
– the injection pipe (3) between the high-pressure pump and the rail. WARNING: the cylinder head mounting clip (6) is very fragile,
– the injector pipes (4).

Fit anti-pollution plugs.

IMPORTANT:
When loosening the injection harness unions (7) on the injector holder, hold the filter-rod supporting bolts (8) with a lock wrench.

Loosen the injector rail bolts (5) without removing the injector rail.

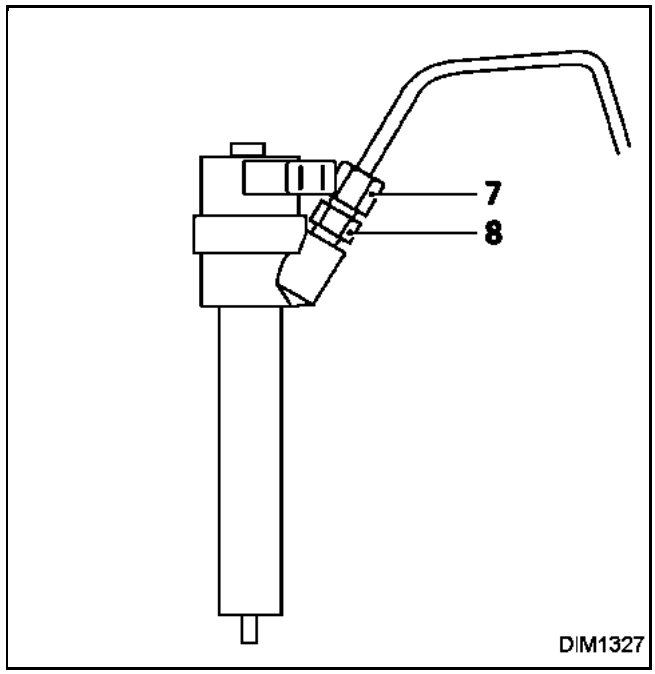

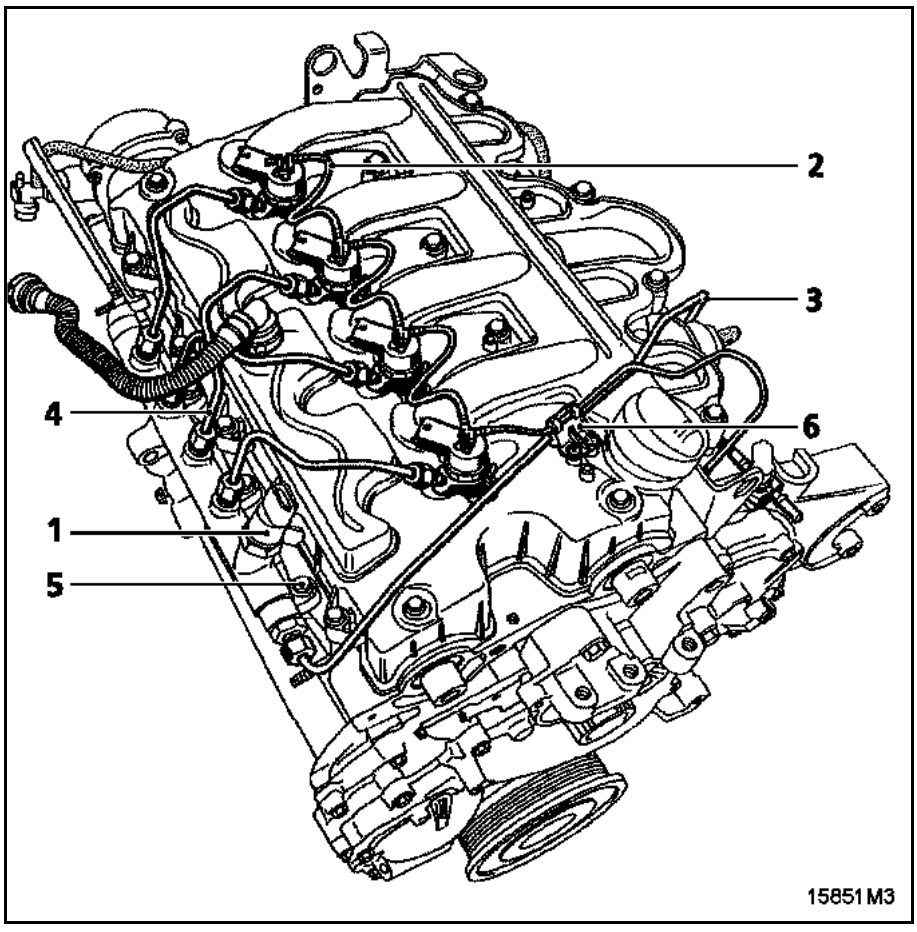

GETtheMANUALS.org

REMOVING THE INJECTOR HOLDERS (pipes removed)

Loosen the mounting bolts on each injector holder.

A special puller must be used to remove the injectors. Never attempt to remove an injector holder locked in its cylinder head well unless using the tool described below.

Description of tool **Mot. 1549**:

1 Extractor support chassis; this is fitted on the rocker cover mounting bolts. Check that it is fitted correctly before use.
2 Puller
3 Extraction bolt

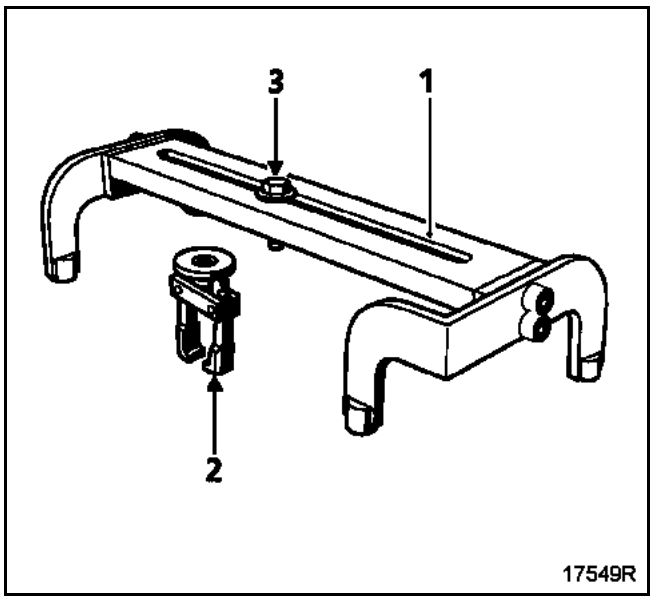

Apply releasing agent around the injector.

Fit the puller onto an injector holder. Tighten the knurled ring to bring the two jaws together on the flat surfaces without over-tightening.

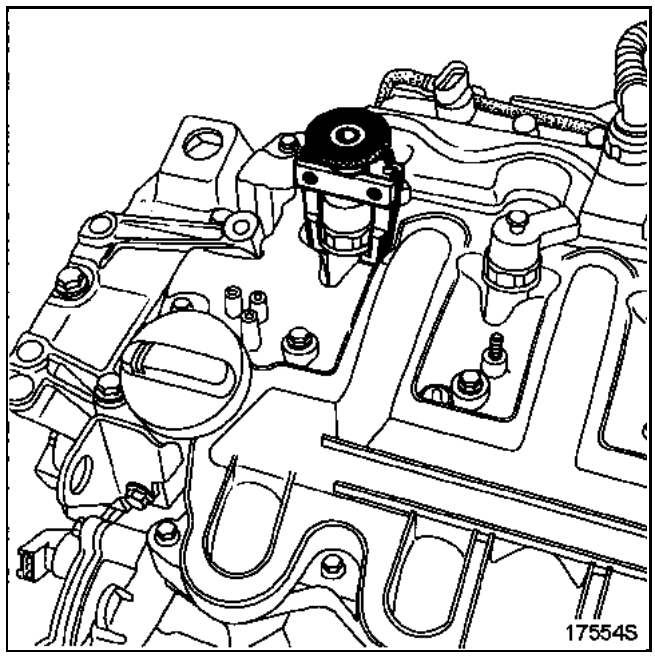

Fit the chassis of tool **Mot. 1549** on the rocker cover mounting bolts. Tighten the extraction bolt until the injector is released from the cylinder head.

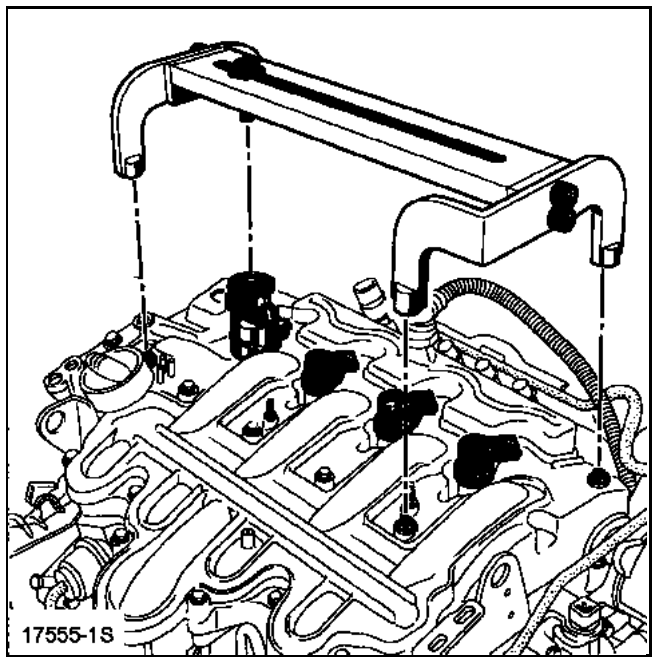

Remove the washer from the bottom of each injector well.

GETtheMANUALS.org

REFITTING

Do not remove the protective plugs from each component until the last moment.

Clean the injector wells and the injector body, as well as their brackets using a lint-free cloth (use the wipes recommended for this purpose, part no. **77 11 211 707**) dipped in clean solvent.

Dry off using a new cloth.

Clean one of the old injector mounting bolts and screw it down to the end of the mounting hole to clean out the threaded holes.

WARNING:
Before fitting the stud to the cylinder head, make sure nut (3) screws smoothly onto the stud (1); if not, replace both.

Fit new studs (1) and injector mounting spacers (2) after coating the threads with oil and screw them in as far as possible by hand (**0.2 daNm**). **The studs and nuts must be replaced every time they are removed.**

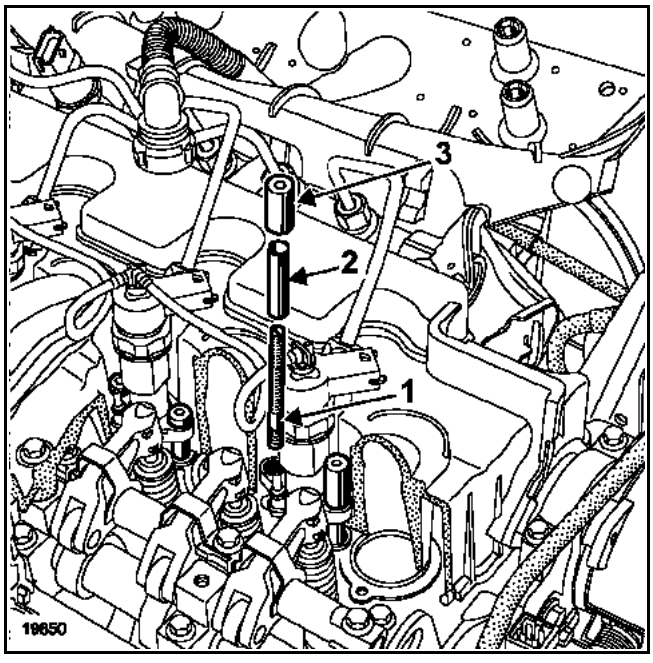

Fit a new injector nose washer on every injector.

Fit the injector equipped with its bracket and locking spring ring.

Oil the threads of the nuts.

WARNING:
Tighten nut (A) on the timing end first, then nut (B) on the flywheel end.

Tighten nut (A) to **0.6 daNm**, then nut (B) to **0.6 daNm**.

Timing end first, then flywheel end.

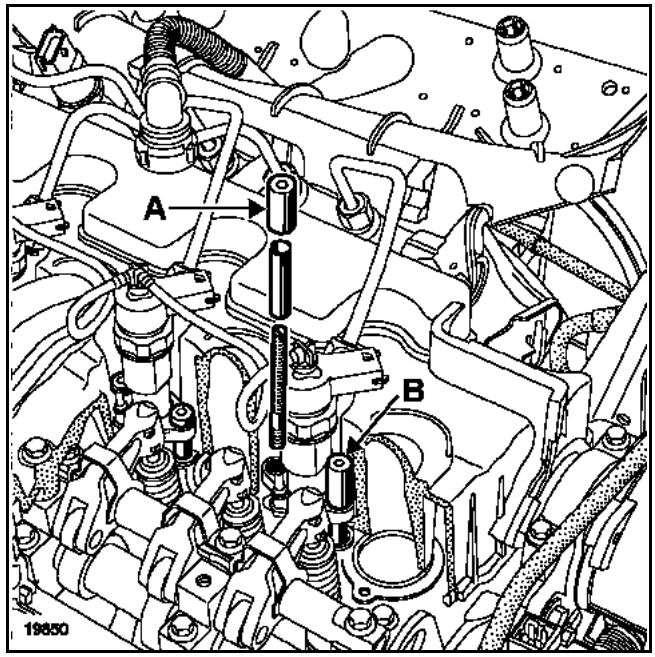

Retighten only the nut (**B**) by (B) **360° ± 30° (flywheel end nut)**.

Loosen the three rail mounting bolts in order to release it.

Remove the rail caps, the injector holders and the injection pipes.

Fit the injection pipes between the rail and the injectors, and pretighten by hand until they touch.

Tighten the three rail mounting bolts to a torque of **2.5 daNm**.

Tighten the injector pipe connections on the injectors and the high-pressure pump to a torque of **2.5 daNm**.

Tighten the injection pipe connections on the high-pressure pump to a torque of **2.7 daNm**.

Tighten the injection pipe connections on the rail to **2.7 daNm**.

GETtheMANUALS.org

Clip the pump/rail pipes mounting clip and tighten the two mounting bolts.

Refit the side partitions of the rail shield correctly.

Fold the rail protector rubber flap forwards and secure it.

When working on the rail protector, ensure that the system components are correctly positioned after refitting (see the Rail protector section).

Non-observance of this advice may have serious consequences.

Continue the refitting procedure in the reverse order to removal.

Discard the bag of caps used during the operation.

Use the fault finding tool to clear any faults which may be stored in the injection computer before restarting the engine.

Re-prime the system by switching on the ignition several times, or run the low pressure pump with the fault finding tool using the "**Actuator Commands**" menu.

After carrying out any work, check that there are no leaks in the diesel circuit.
Proceed as follows:
– run the engine at idle speed until the engine cooling fan starts up,
– accelerate several times with no load,
– carry out a road test,
– switch the ignition off and check that there is no diesel fuel leakage,
– check that the absorbent soundproofing pads are not saturated with diesel fuel.

GETtheMANUALS.org

IT IS FORBIDDEN TO DISMANTLE THE INSIDE OF AN INJECTOR OR TO SEPARATE THE INJECTOR HOLDER FROM THE NOZZLE.

SPECIAL TOOLING REQUIRED	
Mot. 1566	Tool for removing and refitting high pressure pipes

EQUIPMENT REQUIRED
Low torque wrench Pipe socket for tightening high pressure unions (for example, Facom "Crowfoot 19-17" wrench). Pipe socket for tightening the high pressure unions (for example, Facom "Crowfoot 18-17" wrench).

TIGHTENING TORQUES (in daNm)	
High-pressure pipe unions	3.5
High-pressure pipe bracket bolts	0.9
High-pressure pipe unions	3.5
High-pressure pipe mounting bracket bolts on the front manifold	2.1
Filler neck mounting bolt	2.5
Single injector bracket nuts	0.5
Twin injector bracket nuts	2.9
Diesel return pipe unions:	
– on the injectors	1.3
– on the cylinder head	2
Rocker cover bolts	0.9

IMPORTANT:
Before any operation, connect the After-Sales fault finding tool, establish dialogue with the injection computer and check that the injection rail is no longer under pressure.

Wait until the fuel temperature drops.

Order the special high pressure injection circuit caps kit.

GETtheMANUALS.org

REMOVAL

YOU MUST OBSERVE THE CLEANLINESS ADVICE

NOTE:
– injectors may be replaced individually.
– all high-pressure pipes which are removed must always be replaced.

Remove the inlet manifold (see Section **12A Fuel mixture: Inlet manifold**).

Drain the cooling circuit through the radiator bottom hose. There is a risk of coolant entering the cylinders if the injector cooling sockets come out at the same time as the injectors.

Remove the injector rail high-pressure pipes and the rail - intermediate union pipe (see Section **13B High-pressure pipes**).

Disconnect the oil vapour rebreathing pipes on the T union (1), pipe (2) and then cooling pipe (3) on the EGR valve. Remove them from the side.

Injectors on the front row

Remove the mounting bolts:
– (4) from the filler neck,
– (5) from the electrical wiring harness support.

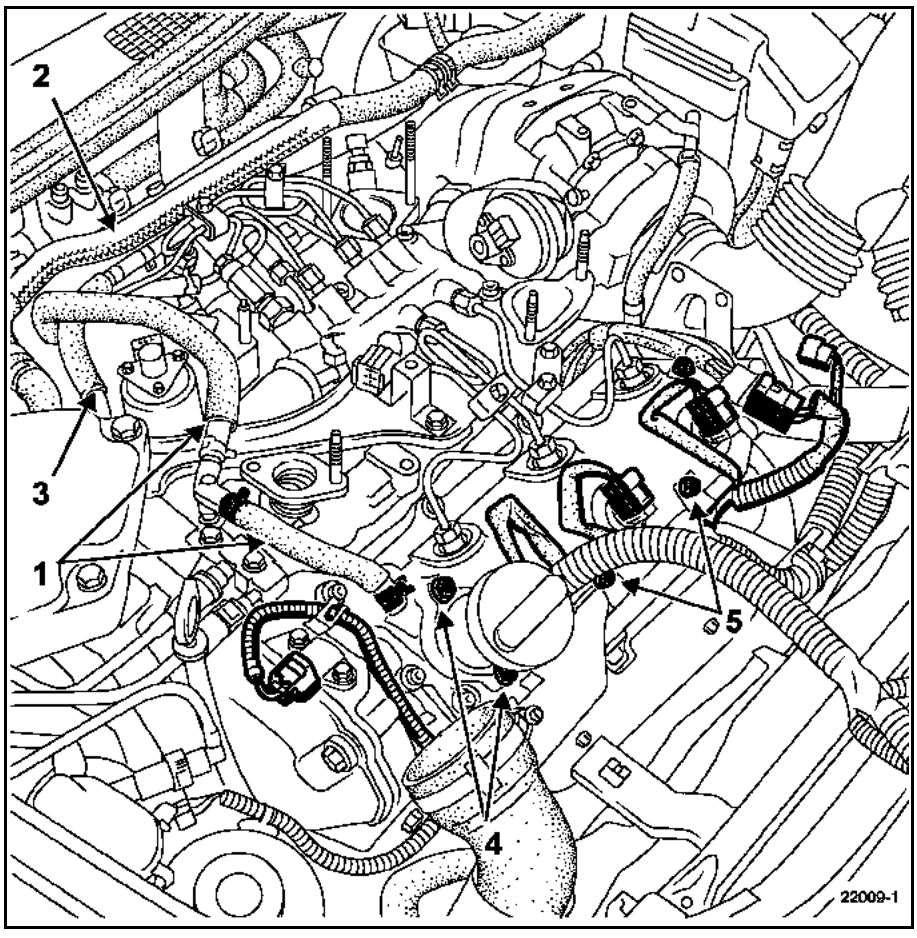

GETtheMANUALS.org

Injectors on the back row

Release the thermoplunger unit from the side. To do this, remove the thermoplunger unit mounting bracket bolt on the cylinder head.

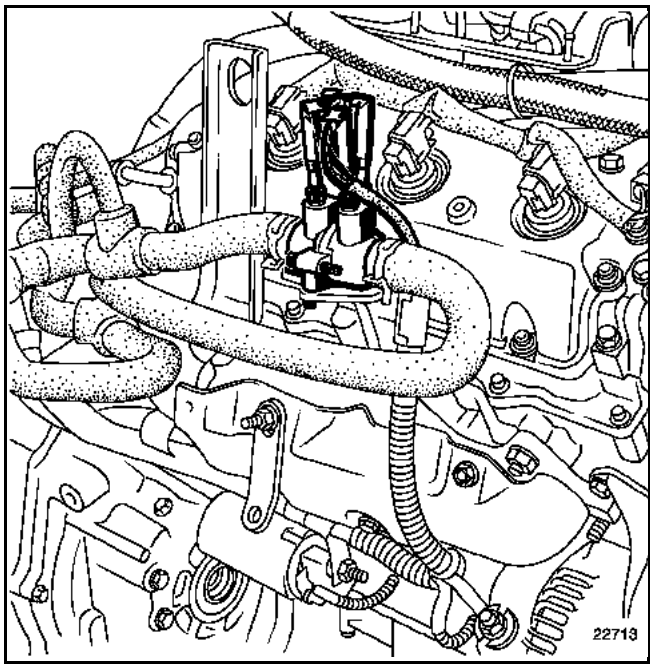

Injectors on the front or back row

Remove the rocker cover mounting bolts. Use a spherical head spanner (e.g. **FACOM 83SH.JP9**) for removing the bolt located near to the lifting bracket on the back row.

Remove the rocker cover.

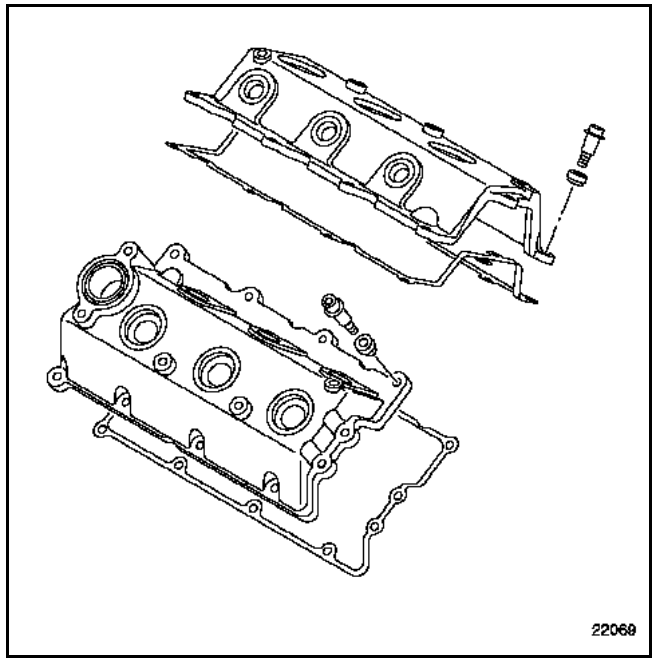

Remove the diesel return pipe.

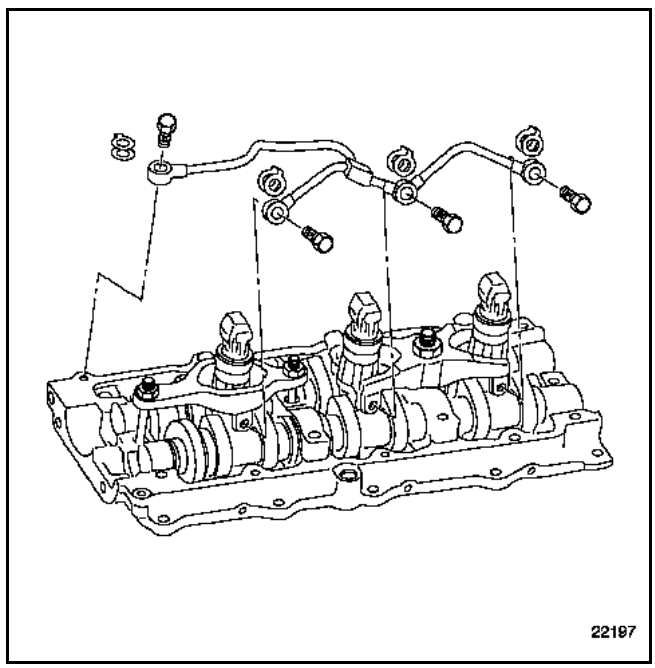

GETtheMANUALS.org

Remove:
– the injector bracket mounting nuts,
– the brackets,

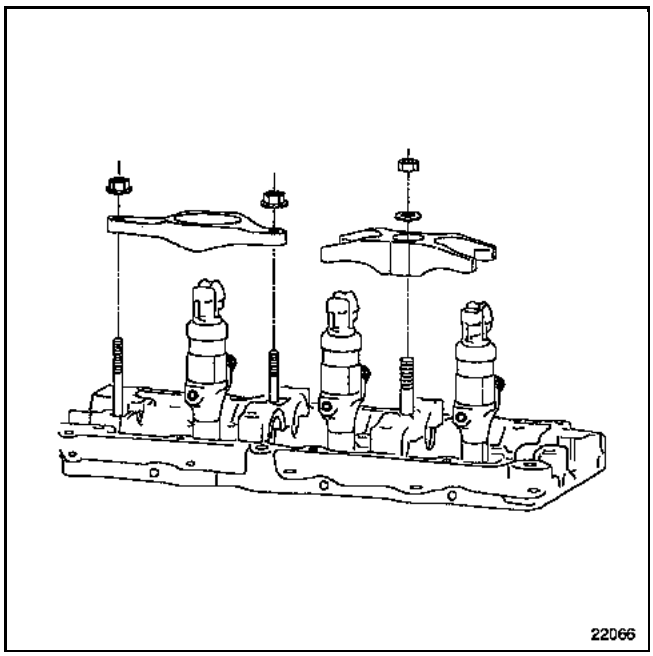

– the injectors.

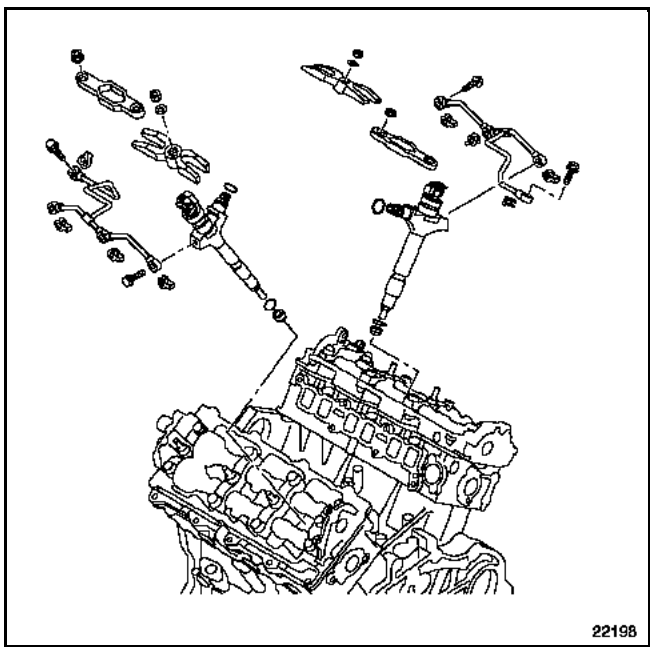

IMPORTANT:
When removing the injectors, the injector cooling sockets in the cylinder head may come out at the same time. If this happens, replace the O-rings then refit new sockets into the cylinder head using the correct tool **EMB.1518**

CLEANING

It is strictly forbidden to use the following when cleaning the injector:
– a wire brush,
– an emery cloth,
– an ultrasound cleaner.

To clean the nose of the injector, let it soak in degreaser, then wipe it with a lint-free cloth.

GETtheMANUALS.org

REFITTING

NOTE:
Remove the blanking plugs at the last moment.

On the injectors, replace:
– the heat protection washer (1),
– the O-ring (2).

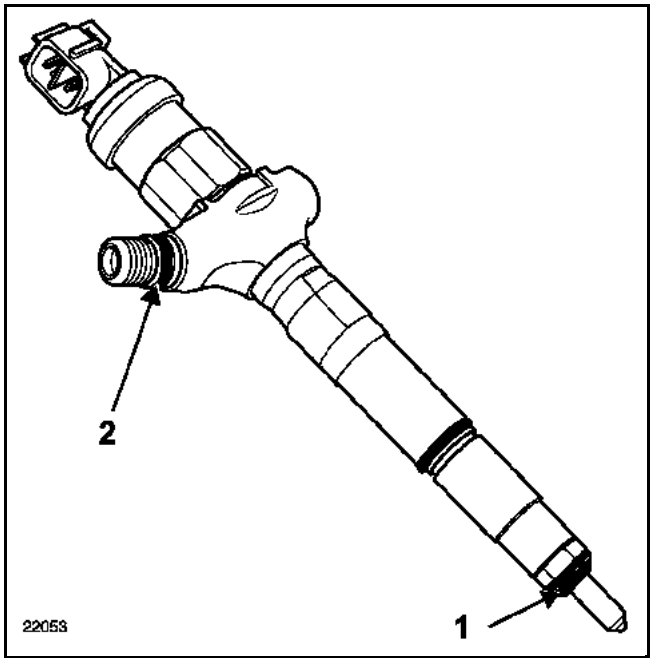

Refit:
– the injectors,
– the injector brackets.

Tighten to torque:
– the nuts (3) on the single injector bracket to **0.5 daNm**,
– the nuts (4) on the twin injector bracket to **2.9 daNm**.

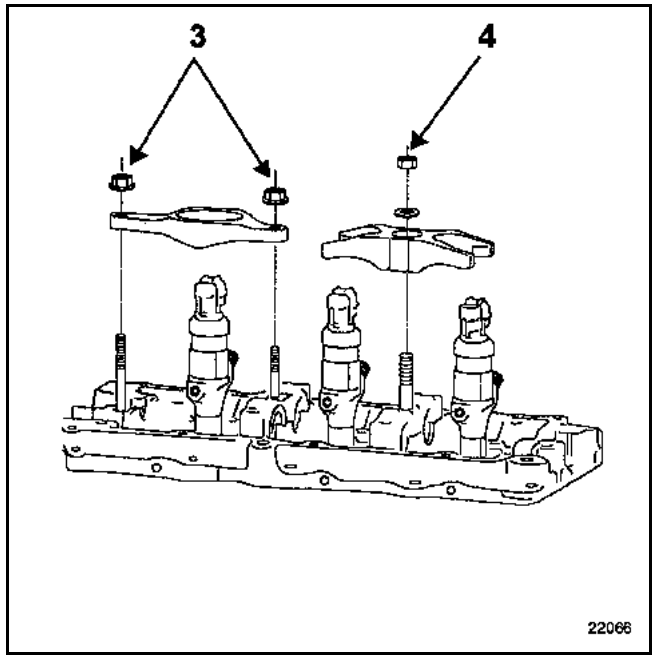

Replace the seals on the diesel return pipe.

Refit the diesel return pipe.

Tighten the diesel return pipe unions:
– on the injectors to a torque of **1.3 daNm**,
– on the cylinder head to a torque of **2 daNm**.

Clean the mating face of the rocker cover and the camshaft unit.

On the rocker cover, replace:
– the seals of the injectors and injector high-pressure unions using tool **Mot. 1649**,
– the rocker cover gasket.

GETtheMANUALS.org

To the camshaft unit, apply a **2 - 4 mm** bead of **THREEBOND** at (A).

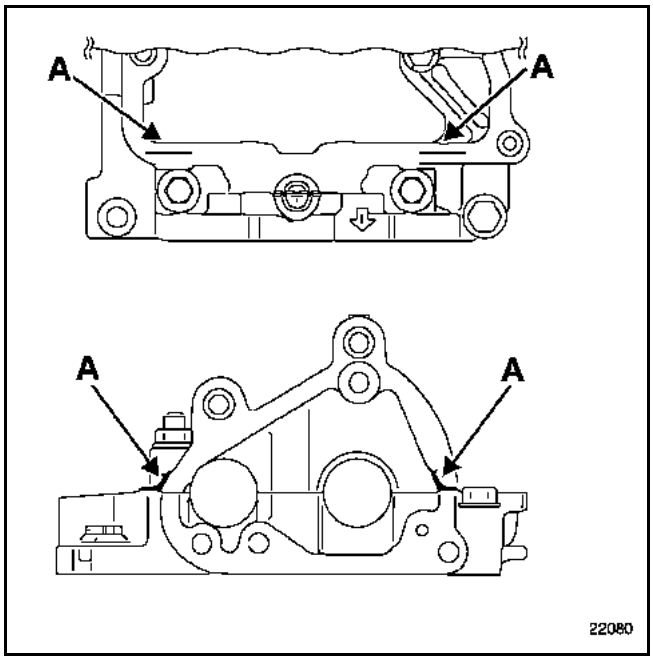

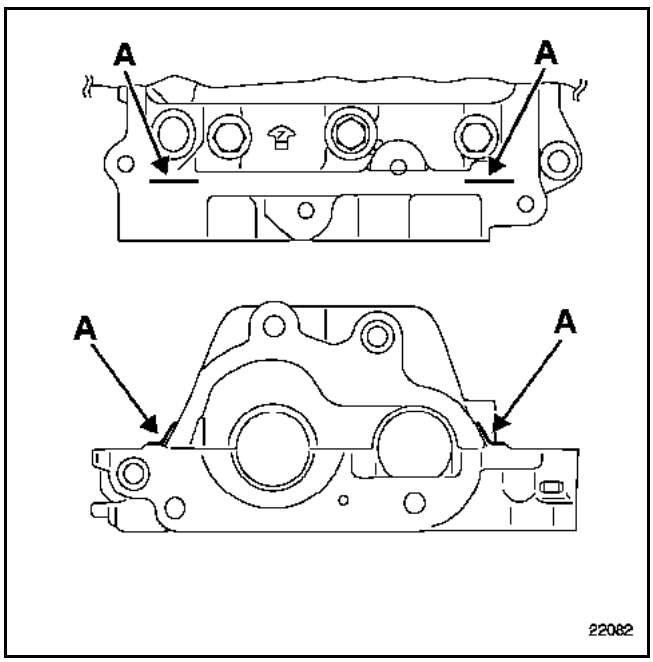

Refit the rocker cover.

Tighten the rocker cover in the correct order and using the correct tightening torque of **0.9 daNm**.

Front row

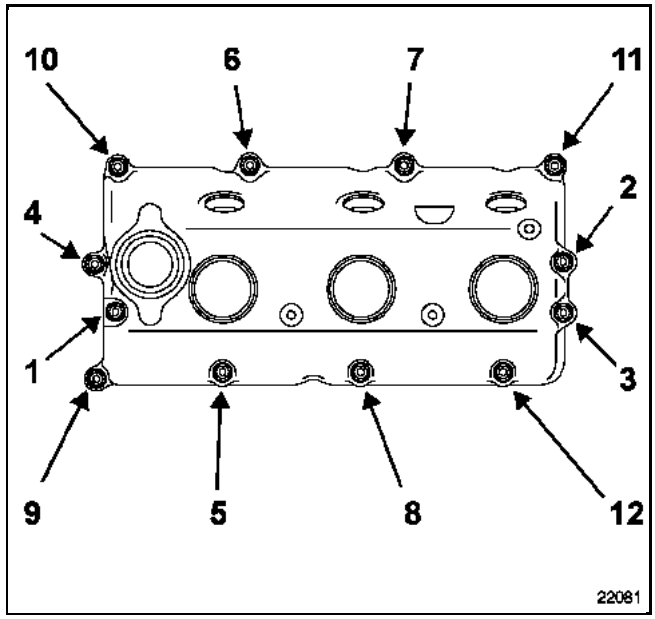

Back row

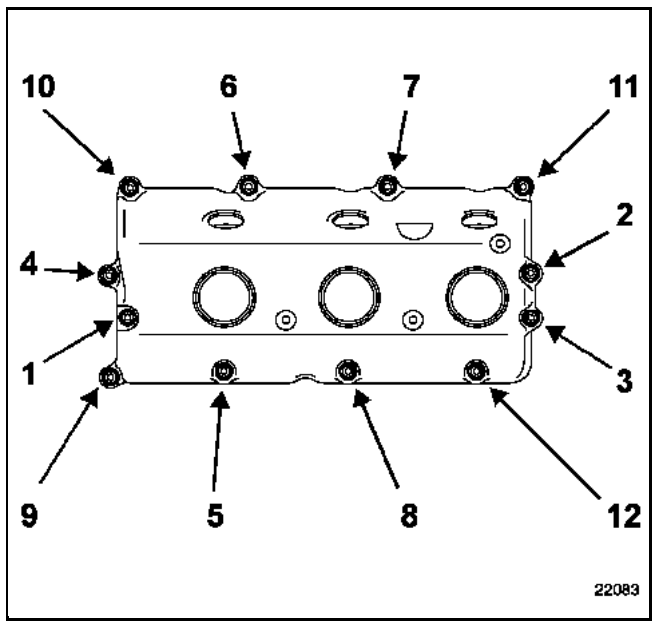

GETtheMANUALS.org

All high pressure pipes removed must be replaced as a matter of course.

Fit and tighten to the correct torques the rails - intermediate union and injector - rail high pressure pipes (see the relevant operation in **section 13B "High pressure pipes"**).

Replace the oil filler neck O-ring.

Refit in the reverse order to removal for the other refitting operations.

Reprime the diesel supply system using the priming bulb.

Fill and bleed the cooling system, (see **19A Cooling Filling and Bleeding**).

Test the sealing of the high-pressure circuit after it has been repaired (see Section **13B "Special notes"**).

GETtheMANUALS.org

SPECIAL TOOLING REQUIRED	
Mot. 1566	Tool for removing and refitting high pressure pipes
EQUIPMENT REQUIRED	
Low torque wrench High-pressure pipe wrench (e.g. Facom DM19 wrench)	

FITTING WITH FIRST MODEL OF RAIL PROTECTOR

TIGHTENING TORQUES (in daNm)	
High pressure pipe nuts	
– on the injectors	**2.5**
– on the pump	**2.7**
– on the rail	**2.7**
Injection rail mounting bolt	**2.5**

WARNING:
Before carrying out any work, plug in the After Sales fault finding tool, establish dialogue with the injection computer and check that the injector rail is depressurised.

Take note of the fuel temperature.

Order the special high pressure injection circuit caps kit.

REMOVAL

OBSERVE THE CLEANLINESS ADVICE CLOSELY

Disconnect the battery.

Unclip the side partitions of the rubber flap.

Unclip the rubber flap from the rocker cover and push it as far back as possible.

Remove the soundproofing material.

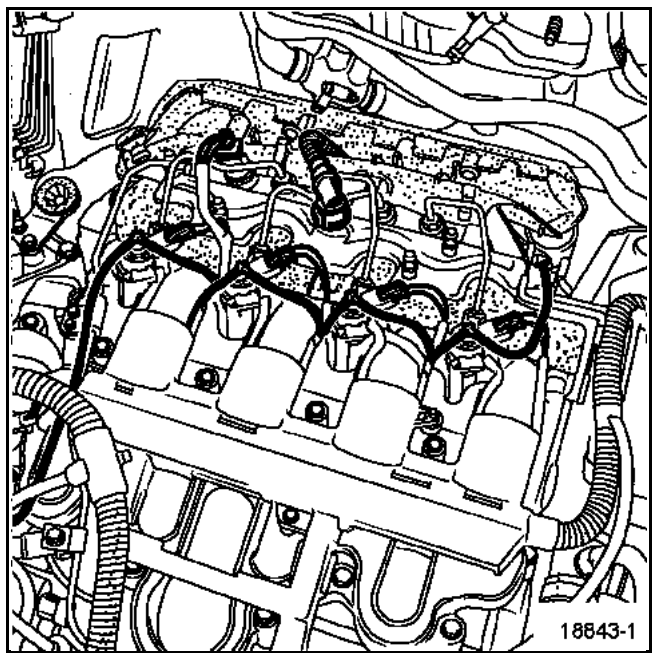

GETtheMANUALS.org

Disconnect the pressure sensor (1) and the injector wiring.

Remove:
– the injector diesel return pipe (2) (to be replaced),
– the injection pipe (3) between the high-pressure pump and the rail. WARNING: the cylinder head mounting clip (6) is very fragile,
– the injector pipes (4).

Fit anti-pollution plugs.

IMPORTANT:
When loosening the injection harness unions (7) on the injector holder, hold the filter-rod supporting bolts (8) with a lock wrench.

Loosen the injector rail bolts (5) without removing the injector rail.

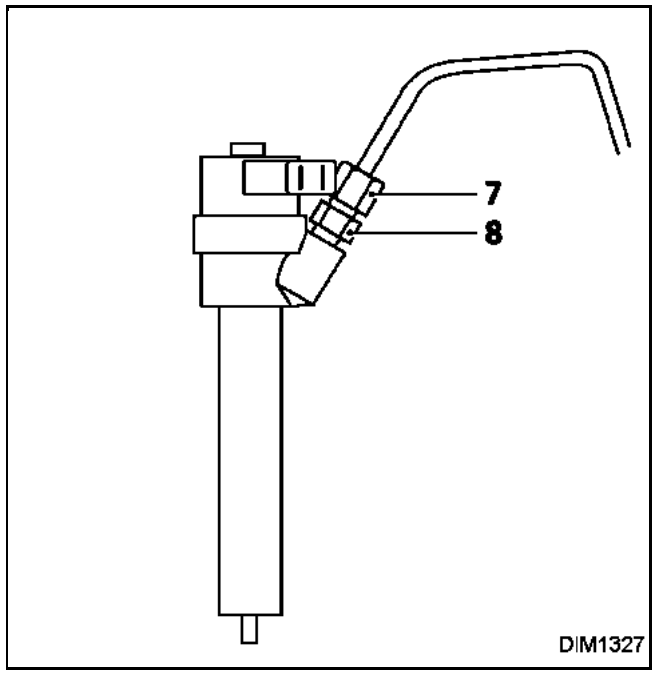

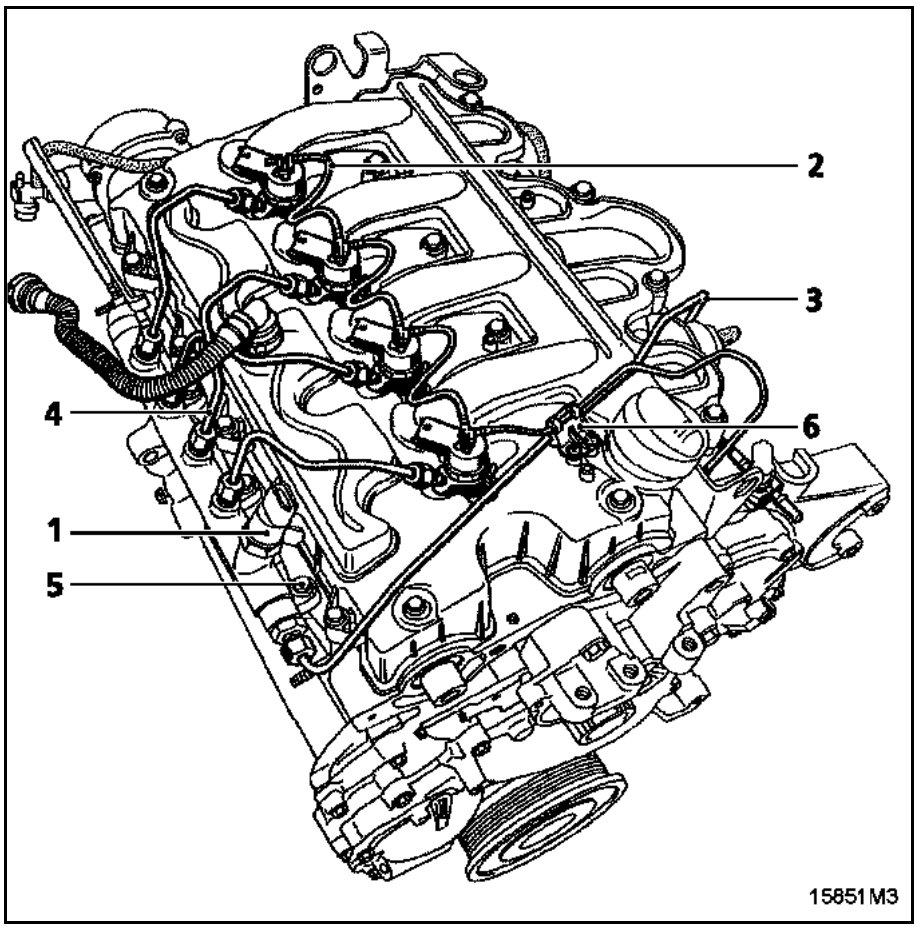

GETtheMANUALS.org

REFITTING

Do not remove the protective plugs from each component until the last moment.

Refit:
– the injector rail and insert the mounting bolts **without** fully tightening them,
– the rail mounting clamp bolt on the metal lower protector.

Remove the rail caps, the injector holders and the injection pipes.

Fit the injection pipes between the rail and the injectors and between the pump and the rail, then pretighten the nuts by hand until they touch.

Tighten the three rail mounting bolts to a torque of **2.5 daNm**).

Tighten the injector pipe connections on the injector to a torque of **2.5 daN.m** and the high pressure pump to a torque of **2.7 daNm**.

Tighten the injection pipe connections on the rail to **2.7 daNm**.

Continue to refit the rail protector, referring to the removal - refitting method for the rail protector (see **Section 13B: Diesel injection: Rail protector**).

During any operations on the rail protector, you must ensure that the system components are fitted properly after refitting (see the Rail protector section).
Non-observance of this advice may have serious consequences.

Continue the refitting procedure in the reverse order to removal.

Discard the bag of caps used during the operation.

Re-prime the system by switching on the ignition several times, or run the low pressure pump with the fault finding tool using the "**Actuator Commands**" menu.

Use the fault finding tool to clear any faults which may be stored in the injection computer before restarting the engine.

After carrying out any work, check that there are no leaks in the diesel circuit.
Proceed as follows:
– run the engine at idle speed until the engine cooling fan starts up,
– accelerate several times with no load,
– carry out a road test,
– switch the ignition off and check that there is no diesel fuel leakage,
– check that the absorbent soundproofing pads are not saturated with diesel fuel.

GETtheMANUALS.org

ALL HIGH-PRESSURE PIPES REMOVED MUST BE REPLACED AS A MATTER OF COURSE.

SPECIAL TOOLING REQUIRED	
Mot. 1566	Tool for removing and refitting high pressure pipes

EQUIPMENT REQUIRED
Low torque wrench Pipe socket for tightening the high pressure unions (for example, Facom "Crowfoot 19-17" wrench). Pipe socket for tightening high pressure unions (for example, Facom "Crowfoot 18-17" wrench).

TIGHTENING TORQUES (in daNm)	
High-pressure pipe unions	3.5
High-pressure pipe bracket bolts	0.9
Injector rail mounting bolt	2.1
Pressure limiter union	2
High-pressure pipe bracket mountings	0.9
High-pressure outlet pipe mounting on the front manifold	2.1

IMPORTANT:
Before any operation, connect the After-Sales fault finding tool, establish dialogue with the injection computer and check that the injection rail is no longer under pressure.

Wait until the fuel temperature drops.

Order the special high pressure injection circuit caps kit.

GETtheMANUALS.org

REMOVAL

YOU MUST OBSERVE THE CLEANLINESS ADVICE

NOTE:
All high pressure pipes removed must be replaced as a matter of course.

Mount the vehicle on a two post lift.

Disconnect the battery.

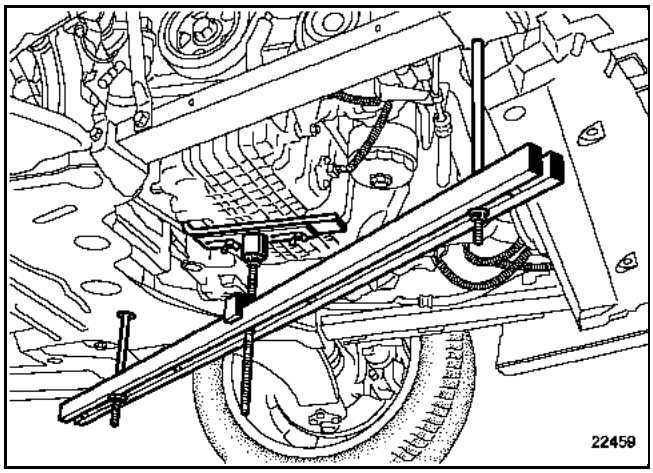

Fit the engine mounting **Mot. 1367-02**.

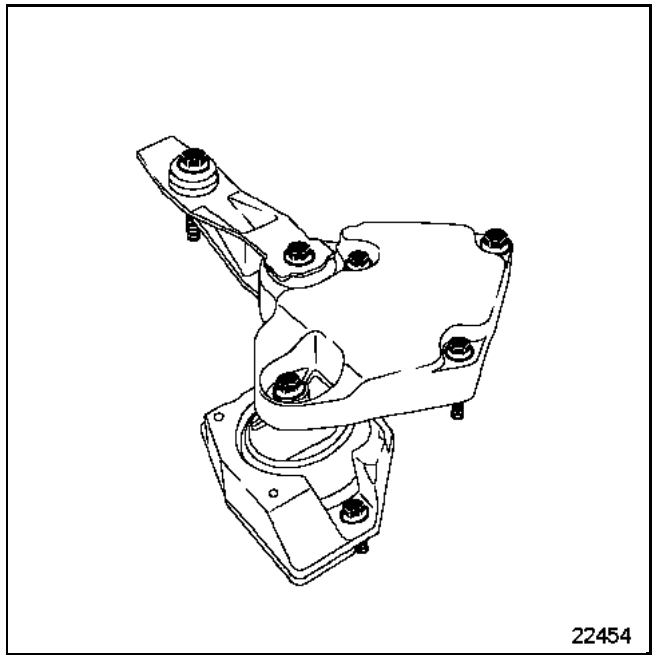

Release the diesel supply pipes on the suspended engine mounting.

Remove the suspended engine mounting-travel limiter assembly.

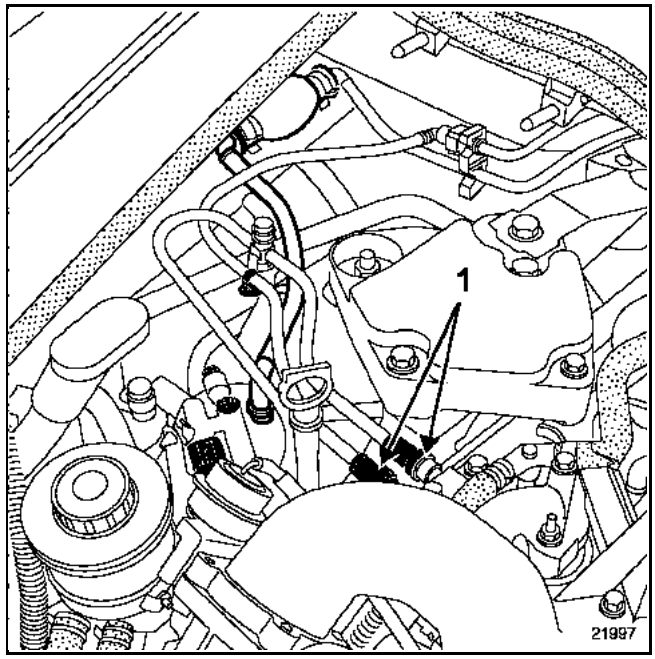

Disconnect the diesel supply and return pipes (1) from the bracket then blank the pipes using the blanking plug kit available from the parts department.

Remove the inlet manifold (see relevant operation in Section **12B Fuel mixture "Inlet manifold"**).

GETtheMANUALS.org

Disconnect:
– the various connectors and actuators of the electric wiring harness (2) then release this from the side,
– the oil vapour rebreathing pipes from the "T" union (3).

Release the connector (4) then remove the acoustic tie-rod (5).

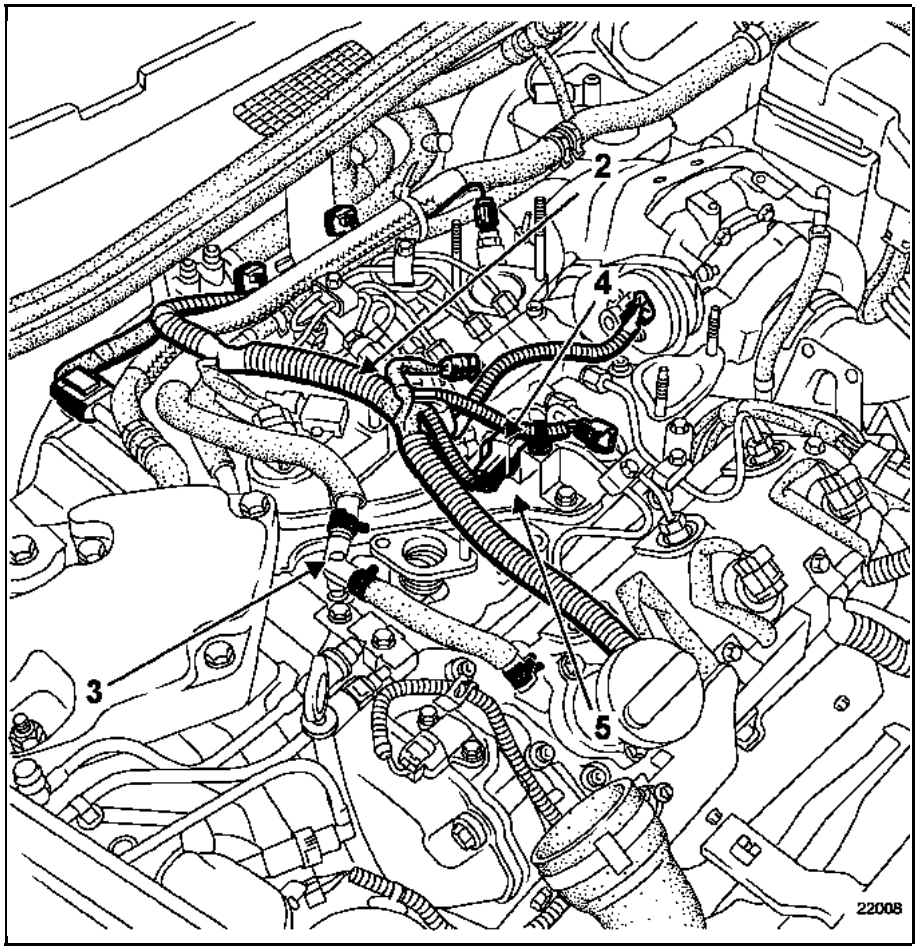

Undo the injector rail high pressure pipe unions.

If necessary, undo the retaining brackets of the various pipes.

Remove:
– the high-pressure pipes,
– the two mounting bolts of the turbocharging regulation diaphragm then release it from the side.

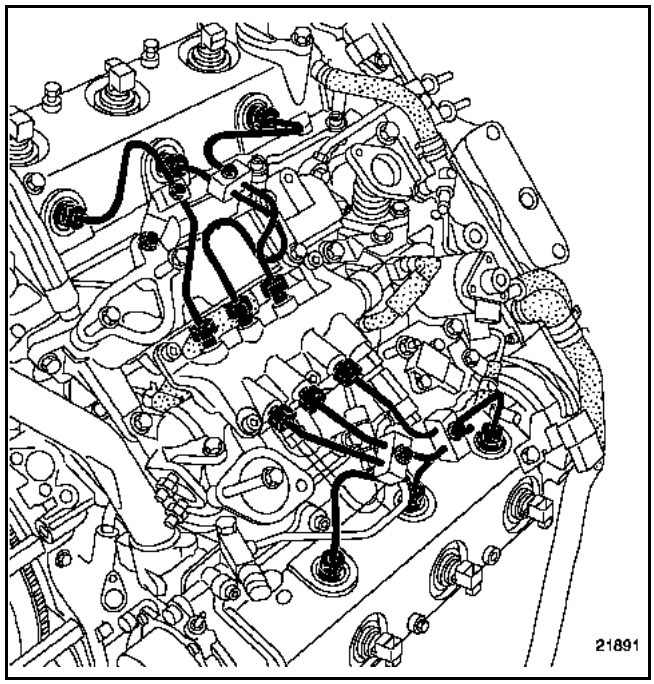

GETtheMANUALS.org

Undo:
– the diesel return pipe unions (6) on the pressure limiter and cylinder head,
– the unions of the high-pressure pump outlet pipe (7) between the intermediate union and the rail.

Remove the high pressure pipe (7).

Undo the rail mounting bolts (8).

Remove the rail from the side.

Remove the heat shield from the rail pressure sensor.

Disconnect the pressure sensor connector.

Remove the injector rail.

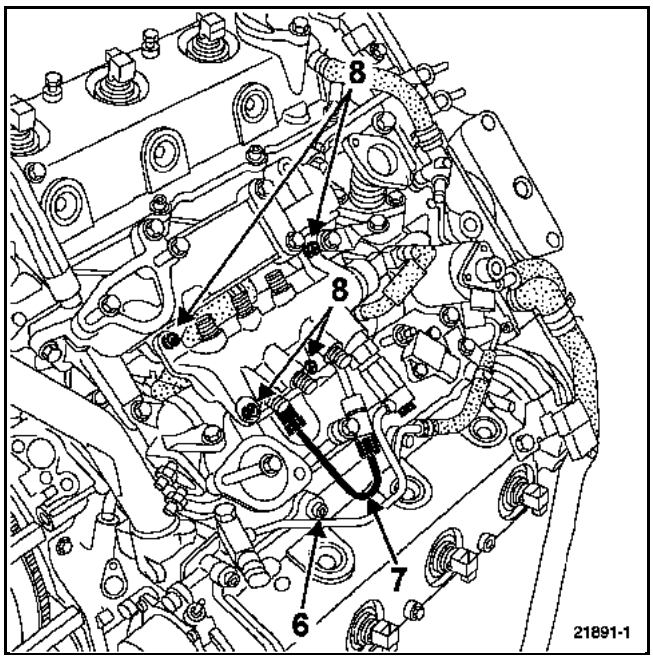

REFITTING

NOTE:
Remove the blanking plugs at the last moment.
Replace all the seals.

Reconnect the pressure sensor connector on the rail.

Refit the heat shield on the rail pressure sensor.

Fit the injector rail.

Tighten the rail mounting bolts (1) by hand.

Fit and hand tighten the pump pipe (2) between the intermediate union and the rail.

Tighten:
– the rail mounting bolts to a torque of **2.1 daNm**,
– the high pressure pipe unions to a torque of **3.5 daNm**, starting with the union on the rail side,
– the pressure limiter union (3) to a torque of **2 daNm**,
– the return pipe union (4) on the cylinder head to a torque of **1.6 daNm**.

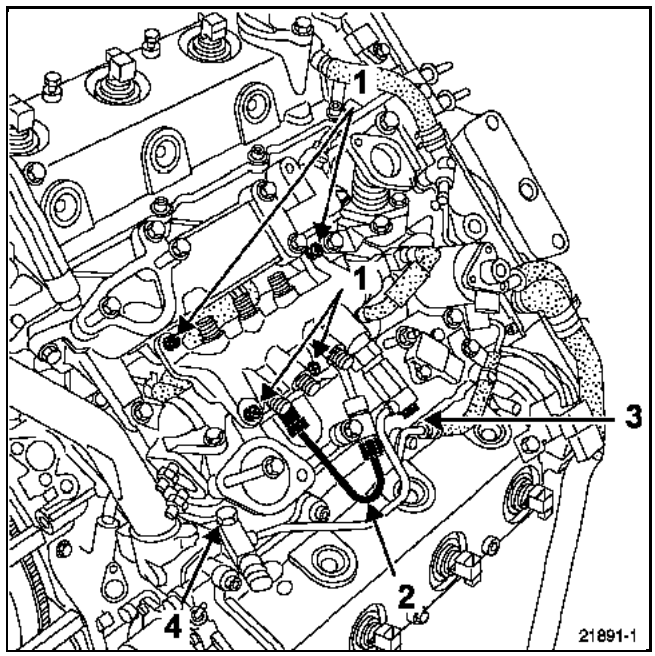

GETtheMANUALS.org

Undo the rail bolts again by a few turns.

Fit and hand tighten all the injector-rail high-pressure pipes.

Fit the injector-rail high-pressure pipe retaining brackets and then tighten to a torque of **0.9 daNm**.

Tighten the rail mounting bolts to a torque of **2.1 daNm**.

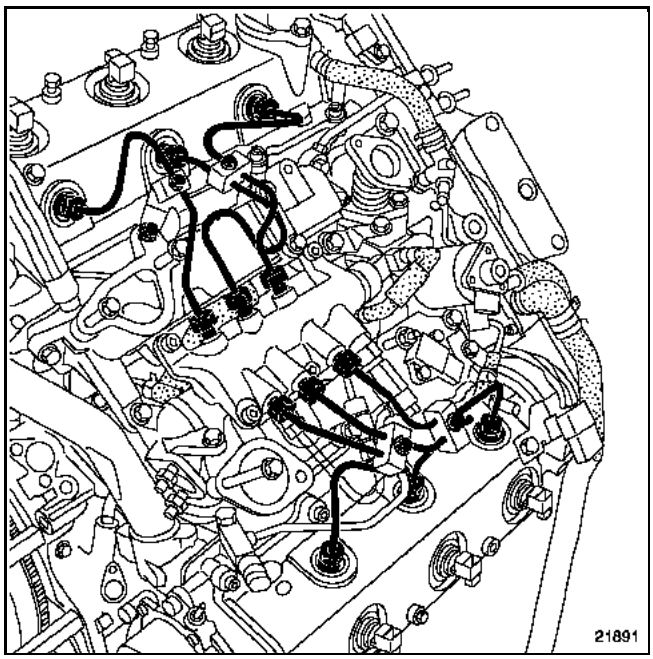

NOTE:
Tighten the high pressure pipes one by one.

Tighten in the correct order to a torque of **3.5 daNm**:
– the high pressure pipe union on the back row starting on the injector side,
– or the high pressure pipe union on the front row starting on the injector side,

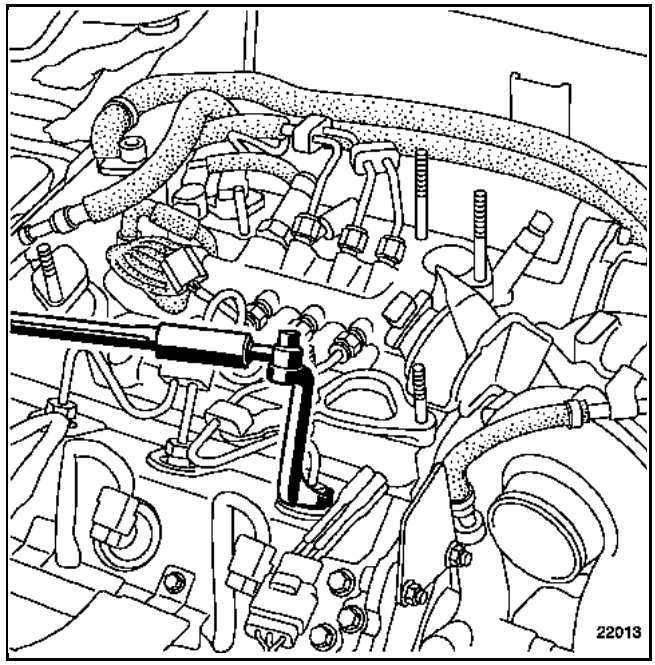

– and the high pressure pipe unions on the rail.

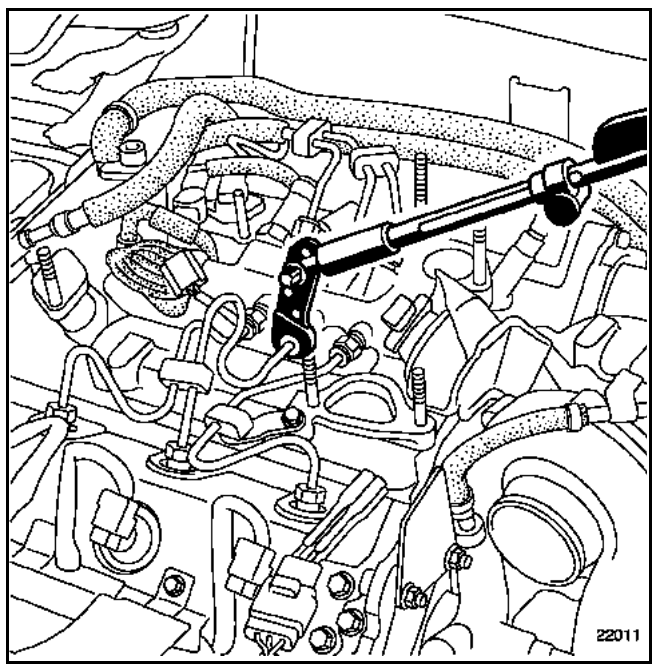

GETtheMANUALS.org

Refit in the reverse order to removal for the other refitting operations.

Reprime the diesel fuel supply system using the priming bulb.

Test the sealing of the high pressure circuit after it has been repaired (see section **13B "Special notes"**).

GETtheMANUALS.org

ALL HIGH-PRESSURE PIPES REMOVED MUST BE REPLACED AS A MATTER OF COURSE.

THE HIGH-PRESSURE PIPES CAN BE REPLACED INDIVIDUALLY

SPECIAL TOOLING REQUIRED	
Mot. 1566	Tool for removing and refitting high pressure pipes

EQUIPMENT REQUIRED
"Low" torque wrench Pipe socket for tightening the high pressure unions (for example, Facom "Crowfoot 19-17" wrench). Pipe socket for tightening the high pressure unions (for example, Facom "Crowfoot 18-17" wrench).

TIGHTENING TORQUES (in daNm)	
High pressure pipe unions	3.5
High pressure pipe bracket bolts	0.9
High pressure pipe mounting on the manifold	2.1
Injector rail mounting bolt	2.1

IMPORTANT:
Before any operation, connect the After-Sales fault finding tool, establish dialogue with the injection computer and check that the injection rail is no longer under pressure.

Wait until the fuel temperature drops.

Order the special high pressure injection circuit caps kit.

GETtheMANUALS.org

REMOVAL

YOU MUST OBSERVE THE CLEANLINESS ADVICE

NOTE:
– removed high pressure pipes can be replaced individually,
– all high pressure pipes which are removed must always be replaced.

Remove the inlet manifold (see section **12B Fuel mixture: Inlet manifold**).

Disconnect:
– the various connectors and actuators of the electric wiring harness (1) then release this from the side,
– the oil vapour rebreathing pipe on the "T" union (2), then the pipe (3).
Remove this from the side.

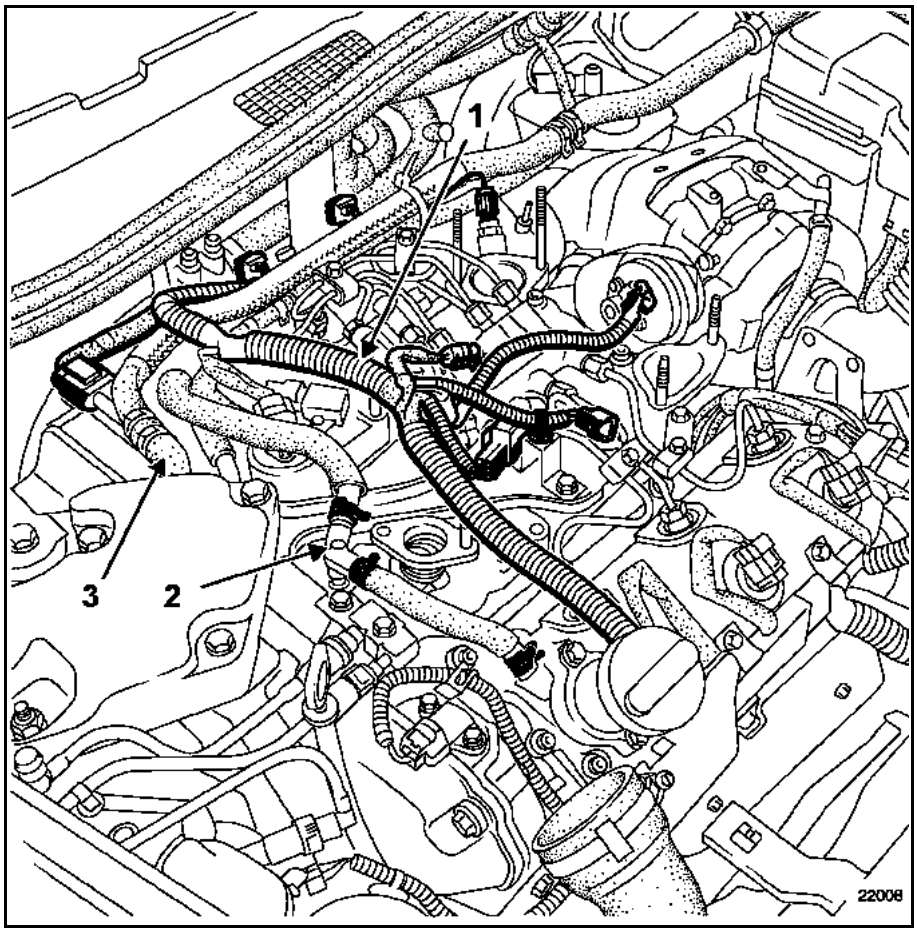

GETtheMANUALS.org

Injector rail pipes

Undo the high pressure pipe unions.

If necessary, undo the retaining brackets of the various pipes.

Remove the high pressure pipes.

Insert the anti-contamination caps.

Rail-pump pipes

Remove:
– the rail (see section **13B "injector rail"**),
– the EGR vale - exchanger (see section **12A Fuel mixture "EGR valve of the exhaust gas - Exchanger"**).

Remove the high-pressure pipe (1) between the injection pump and the intermediate union on the inlet manifold.

REFITTING

NOTE:
Remove the blanking plugs at the last moment.

Rail-pump pipes

Fit and hand tighten the high-pressure pipe between the pump and the intermediate union on the inlet manifold.

Tighten the pipe unions (1) between the pump and the intermediate union on the inlet manifold to a torque of **3.5 daNm**, starting on the intermediate union side and then the pump side.

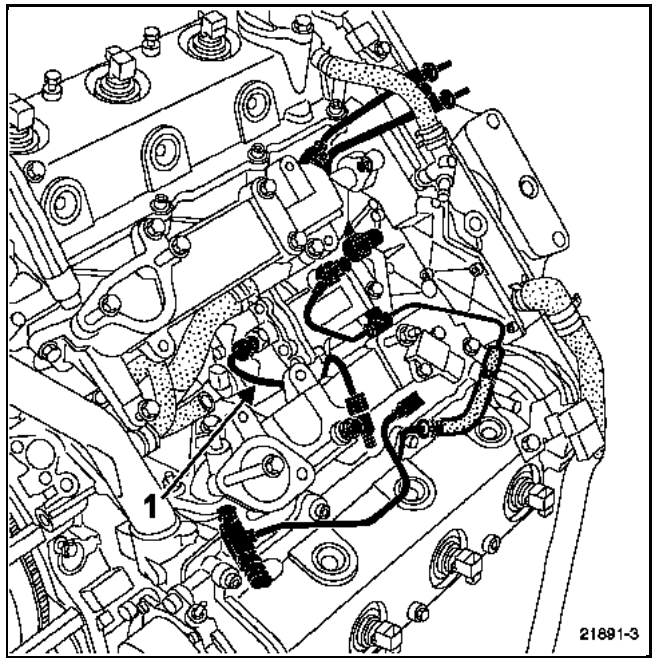

Refit the intercooler / EGR valve assembly (see section **12A Fuel mixture "Intercooler / EGR valve assembly"**).

Fit the injector rail. To do this:
– reconnect the pressure sensor connector,
– refit the heat shield,
– tighten the mounting bolts by hand.

Fit and hand tighten the pump pipe between the intermediate union and the rail.

GETtheMANUALS.org

Tighten:
– the rail mounting bolts (2) to a torque of **2.1 daNm**.
– the high pressure pipe unions (3) to a torque of **3.5 daNm**, starting with the union on the rail side,
– the pressure limiter union (4) to a torque of **2 daNm**.

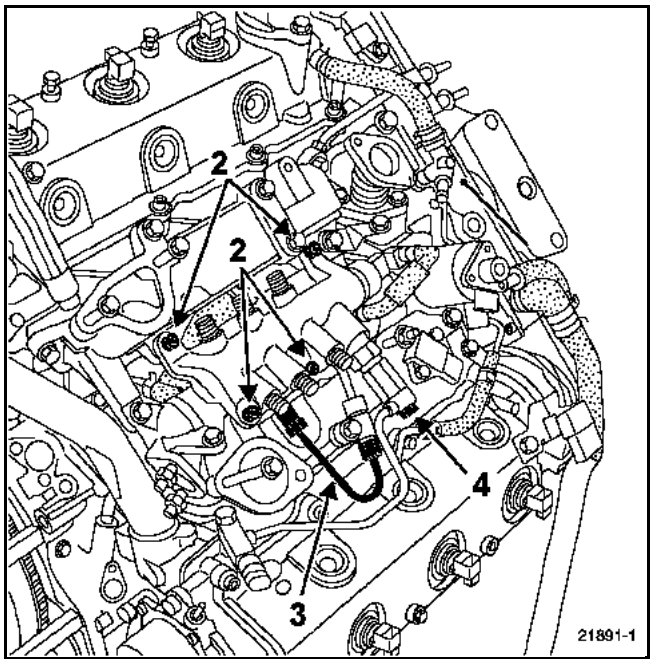

Injector-rail pipes

Undo the rail bolts by a few turns.

Fit and hand tighten all the injector-rail high-pressure pipes.

Fit the injector-rail high-pressure pipe retaining brackets (5) and then tighten to a torque of **0.9 daNm**.

Tighten the rail mounting bolts to a torque of **2.1 daNm**.

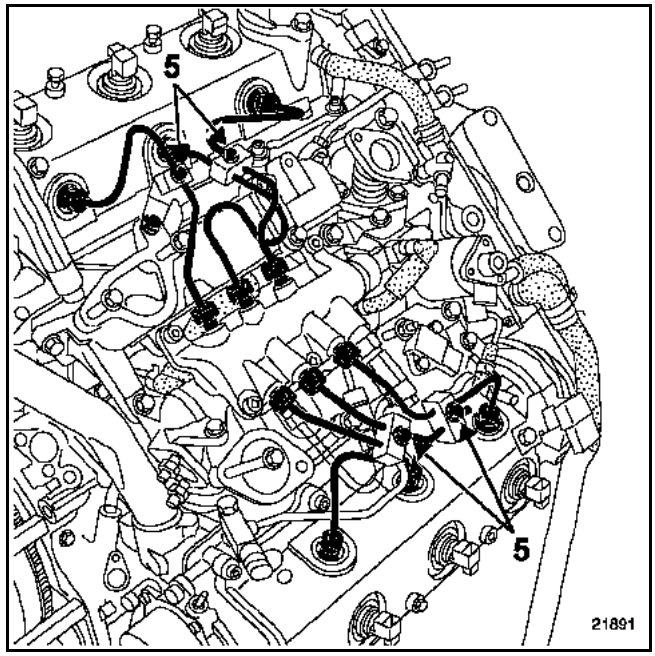

NOTE:
Tighten the high-pressure pipes one by one.

Tighten in the correct order to a torque of **3.5 daNm**:
– the high-pressure pipe union on the back row starting on the injector side,
– or the high-pressure pipe union on the front row starting on the injector side,

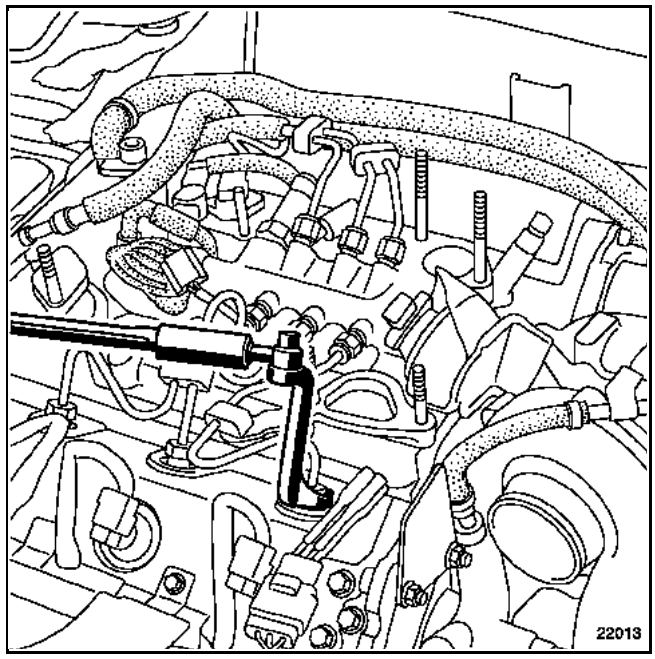

GETtheMANUALS.org

– and the high-pressure pipe unions on the rail.

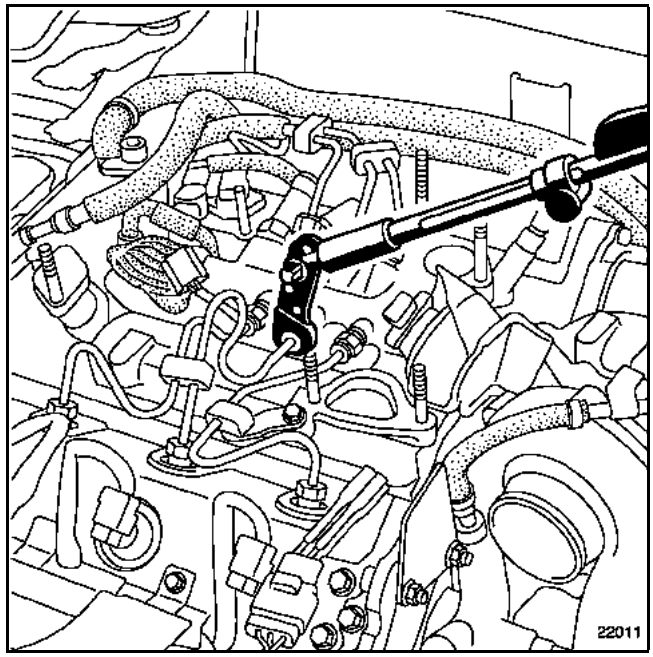

Refit in the reverse order to removal for the other refitting operations.

Reprime the diesel supply system using the priming bulb.

Test the sealing of the high-pressure circuit after it has been repaired (see Section **13B "Special notes"**).

GETtheMANUALS.org

SPECIAL TOOLING REQUIRED	
Mot. 1495	Tool for removing the lambda sensors

TIGHTENING TORQUES (in daNm)	
Pressure sensor	3.5 ± 0.5

IMPORTANT:
before any operation, connect the After-Sales fault finding tool, establish dialogue with the injection computer and check that the injector rail is not under pressure.

Take note of the fuel temperature.

Order the special high pressure injection circuit caps kit.

OBSERVE THE CLEANLINESS ADVICE CLOSELY

REMOVAL

Disconnect the battery.

Unclip the side partitions of the rubber flap.

Unclip the rubber flap from the rocker cover and push it as far back as possible.

Disconnect the pressure sensor.

Undo the pressure sensor with tool **Mot. 1495**.

Remove the pressure sensor.

Fit anti-pollution plugs.

REFITTING

Replace the seal.

Remove blanking plugs.

Screw in the sensor then tighten it to torque.

Connect the sensor connector.

Continue to refit the rail protector, referring to the removal - refitting method for the rail protector (see **Section 13B: Diesel injection: Rail protector**).

After carrying out any work, check that there are no leaks in the diesel circuit.
Proceed as follows:
- run the engine at idle speed until the engine cooling fan starts up,
- accelerate several times with no load,
- carry out a road test,
- switch the ignition off and check that there is no diesel fuel leakage,
- check that the absorbent soundproofing pads are not saturated with diesel fuel.

GETtheMANUALS.org

The pressure sensor (1) can be removed from the injector rail. If the pressure sensor develops a fault, the injector rail must be removed (see Section **13B Injector rail**).

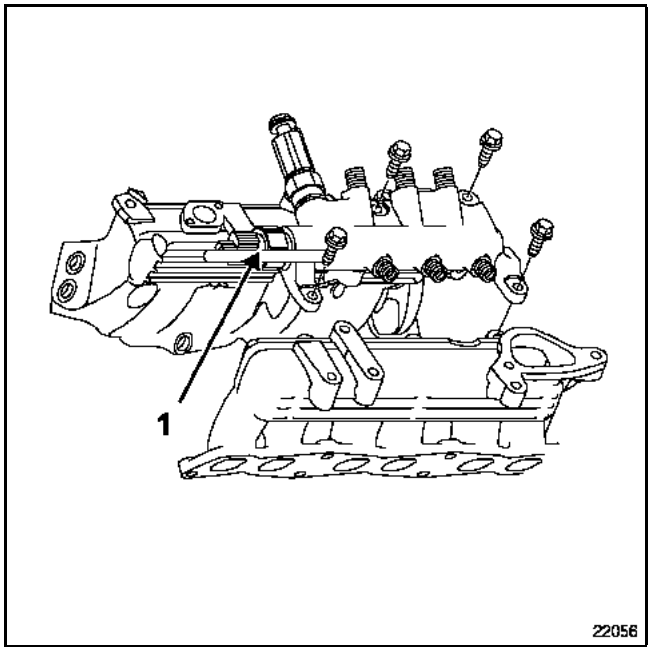

GETtheMANUALS.org

TIGHTENING TORQUE (in daNm)	
Pressure regulator	**0.6**

IMPORTANT:
Before any operation, connect the After-Sales fault finding tool, establish dialogue with the injection computer and check that the injection rail is no longer under pressure.

Take note of the fuel temperature.

Order the special high pressure injection circuit caps kit.

OBSERVE THE CLEANLINESS ADVICE CLOSELY

REMOVAL

Disconnect:
– the diesel fuel heater connector (1),
– the position sensor (2),
– the fuel temperature sensor (3),
– the pressure regulator connector (4).

Move the electric wiring harness aside.

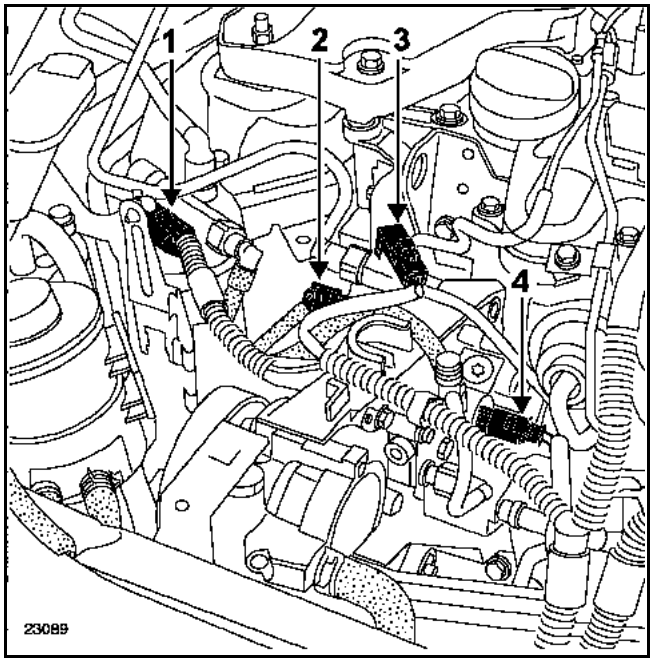

Disconnect the high pressure pump fuel supply pipe (5).

Fit anti-pollution plugs.

Remove the fuel supply pipe retaining bracket (6).

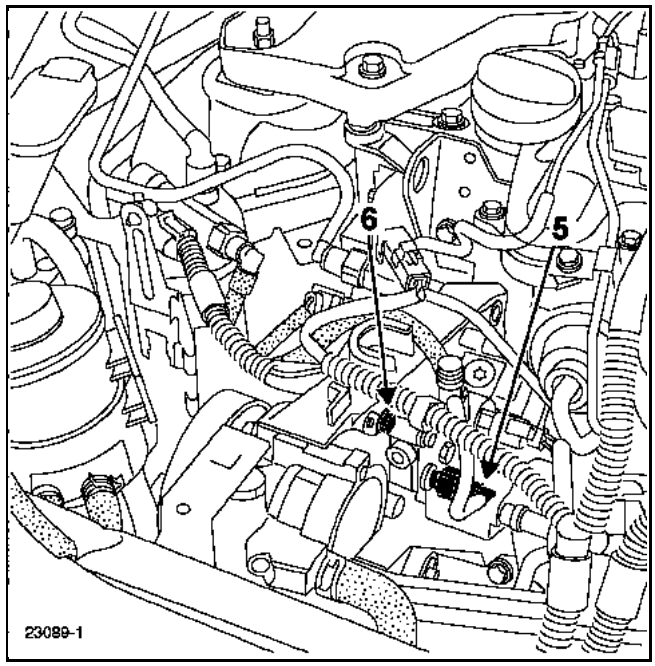

GETtheMANUALS.org

REMOVAL

Blow the area with compressed air to clean impurities away from the fuel pressure regulator.

Clean the area with brake cleaning product.

Remove:
– the three fuel pressure regulator mounting bolts (7),
– the fuel pressure regulator by hand (do not use a tool to lever it).

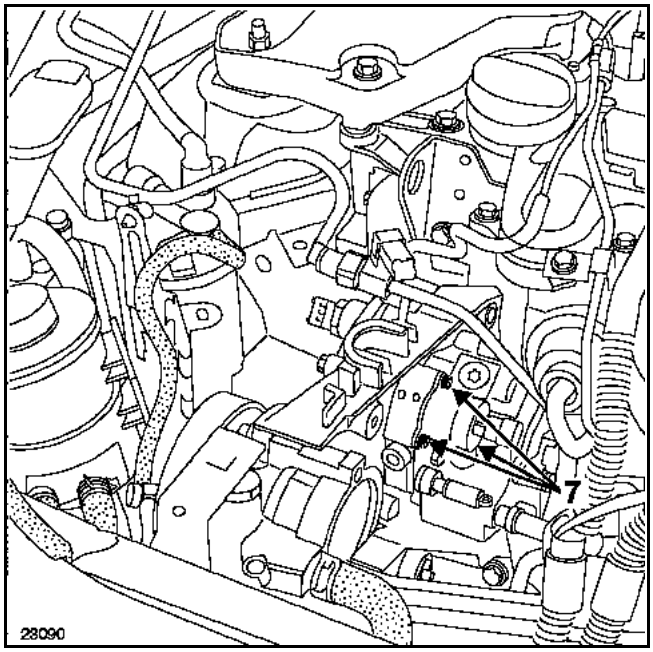

Clean and wipe the fuel pressure regulator bearing face on the high pressure pump, taking care not to contaminate it.

Rinse the fuel pressure regulator housing in the high-pressure pump by switching on the ignition several times or by operating the low pressure pump using the diagnostic tool in the "**Actuator commands**" menu. Use a container to collect any diesel that flows out.

REFITTING

– Preparing the new regulator:

  ● remove the protective cap and check the position of the gaskets, lubricate the O-rings with clean fuel.

    NOTE:
    Lubrication is very important in preventing external leakage.

– insert the regulator with a gentle twisting movement and slowly push it all the way in,

– pretighten the three new bolts to **0.3 daNm** then tighten to **0.6 daNm** using a torque wrench,

– clean the area with cleaning cloths.

Proceed with refitting in the reverse order to removal.

Use the fault finding tool to clear any faults which may be stored in the injection computer before restarting the engine.

After carrying out any work, check that there are no leaks in the diesel circuit.
Proceed as follows:
– run the engine at idle speed until the engine cooling fan starts up,
– accelerate several times with no load,
– carry out a road test,
– switch the ignition off and check that there is no diesel fuel leakage,
– check that the absorbent soundproofing pads are not saturated with diesel fuel.

GETtheMANUALS.org

EQUIPMENT REQUIRED
"Low torque" torque wrench

TIGHTENING TORQUE (in daNm)	
Diesel temperature sensor	2.3

IMPORTANT:
Before any operation, connect the After-Sales fault finding tool, establish dialogue with the injection computer and check that the injection rail is no longer under pressure.

Wait until the fuel temperature drops.

GETtheMANUALS.org

GENERAL INFORMATION

The rail protector consists of nine parts which isolate the high pressure injection system from the engine compartment.

THIS RAIL PROTECTOR ENSURES SAFE OPERATION AND REQUIRES SPECIAL ATTENTION WHEN BEING FITTED.

To ensure its safety function, the rail protector should consist of:
– two soundproofing pads (1) **to be replaced** if they are damaged or saturated with diesel,
– lower metal protector (2) fixed between the rail and the cylinder head,
– a diesel drain pipe (3) **to be replaced** if it is damaged or saturated with diesel,
– a rubber flap (4) fixed to the metal protector and the rocker cover,
– two side partitions (5),
– two retaining clips for attaching the side partitions to the rubber flap.

When working on the rail protector, ensure that the system components are correctly positioned after refitting.

FAILURE TO COMPLY WITH THESE INSTRUCTIONS MAY HAVE SERIOUS SAFETY-RELATED CONSEQUENCES.

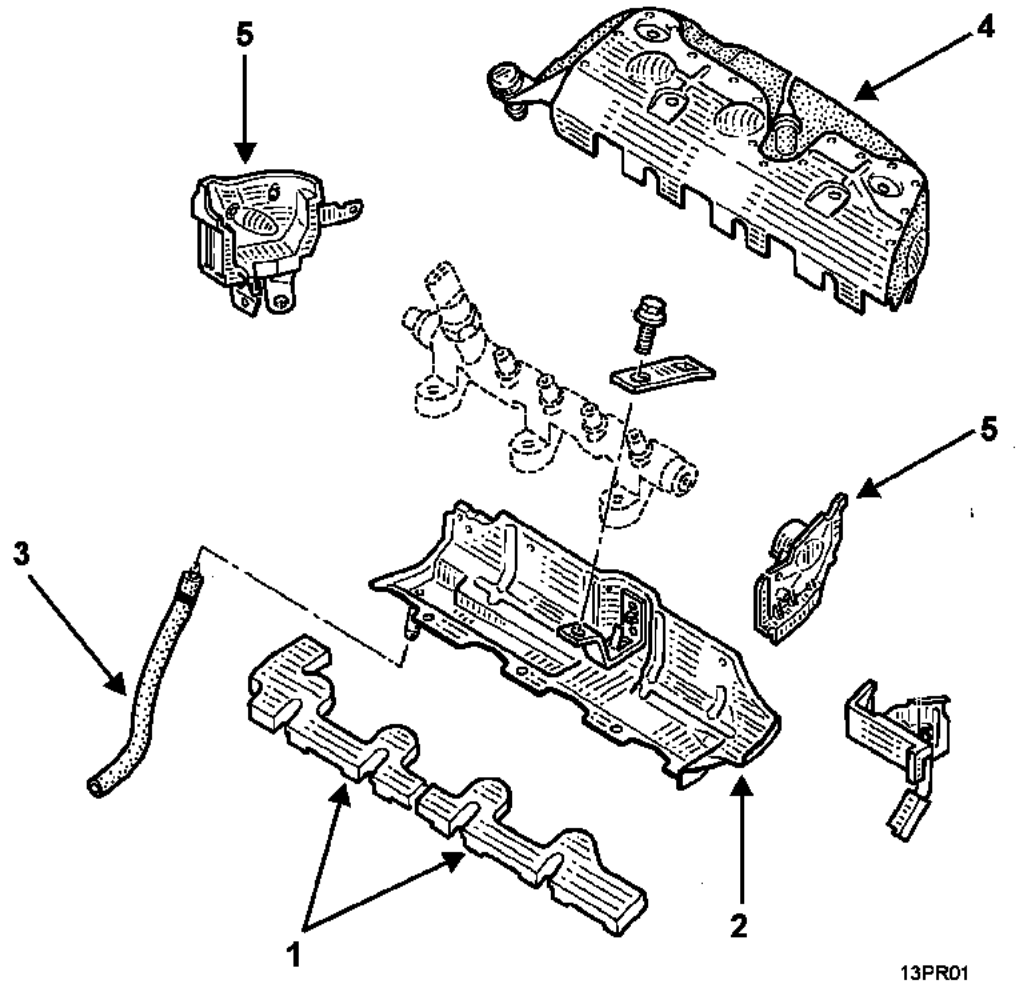

GETtheMANUALS.org

SPECIAL TOOLING REQUIRED	
Mot. 1566	Tool for removing and refitting high pressure pipes
EQUIPMENT REQUIRED	
"Low torque" torque wrench	

TIGHTENING TORQUES (in daNm)	
High pressure pipe nuts	2.5 ± 0.2
Injection rail mounting bolt	2.3 ± 0.3
Rail-pump pipe bracket bolt	2.5 ± 0.2

IMPORTANT:
Before any operation, connect the After-Sales fault finding tool, establish dialogue with the injection computer and check that the injection rail is no longer under pressure.

Take note of the fuel temperature.

Order the special high pressure injection circuit caps kit.

OBSERVE THE CLEANLINESS ADVICE CLOSELY

REMOVAL

Disconnect the battery.

Unclip the side partitions of the rubber flap.

Unclip the upper rubber protector from the rocker cover and push it as far back as possible.

Remove the soundproofing pads.

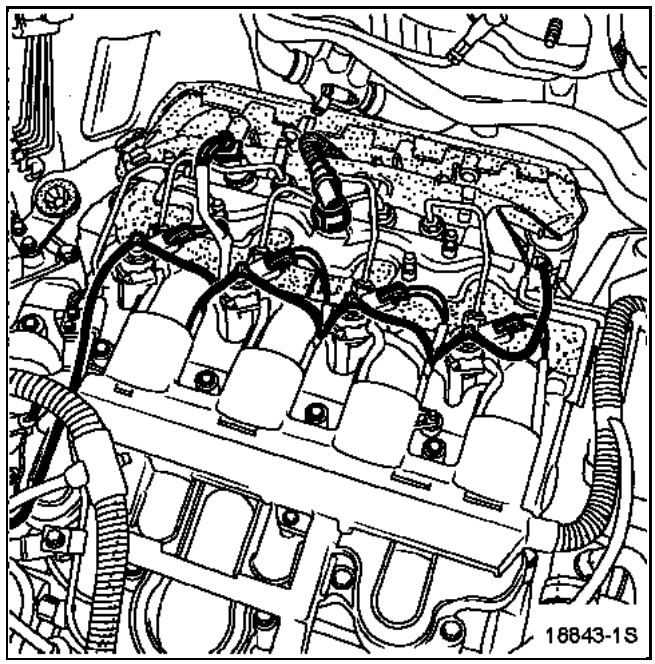

GETtheMANUALS.org

Disconnect the pressure sensor (1) and the injector wiring.

Remove:
– the injector diesel return pipe (2) (to be replaced),
– the injection pipe (3) between the high-pressure pump and the rail. WARNING: the cylinder head mounting clip (6) is very fragile,
– the injector pipes (4).

Fit anti-pollution plugs.

IMPORTANT:
When loosening the injection pipe unions (7) on the injector holder, hold the filter-rod supporting bolts (8) with a lock wrench.

Undo the injector rail bolts (5) without removing them.

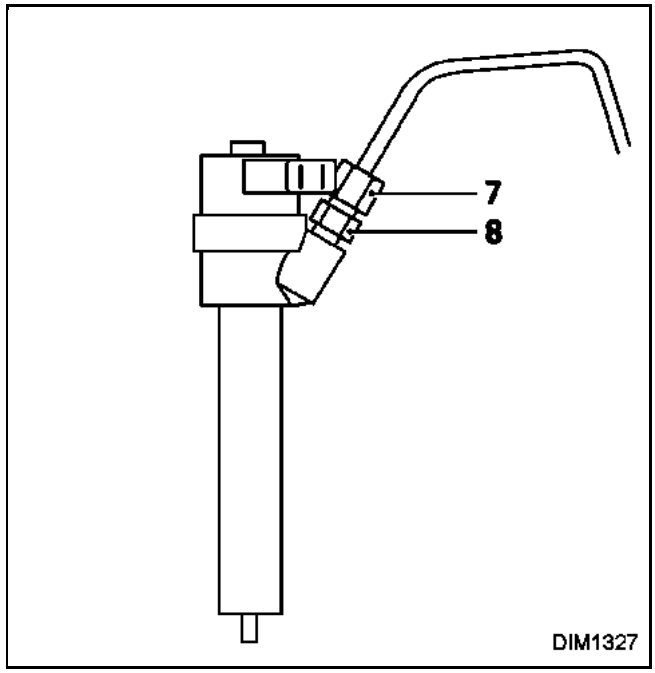

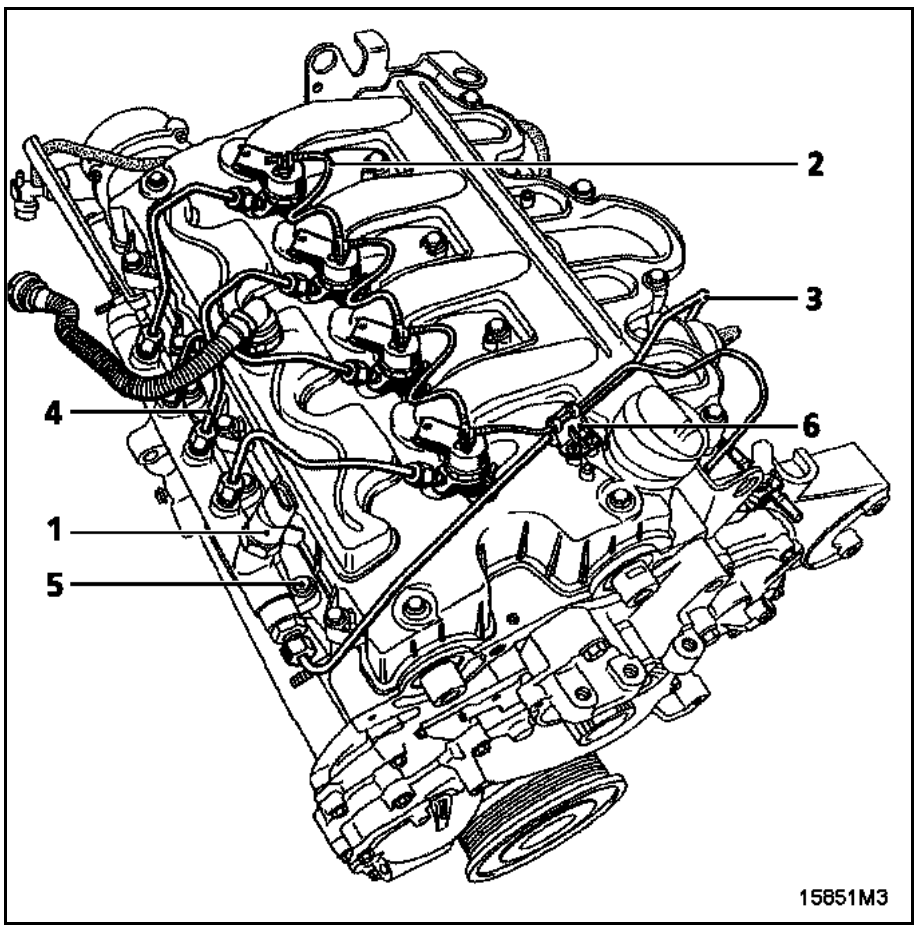

GETtheMANUALS.org

REMOVAL

Disconnect the diesel drain pipe (1).

Remove:
– the side partition mounting bolt (2),
– the lower metal protector mounting bolt (3),

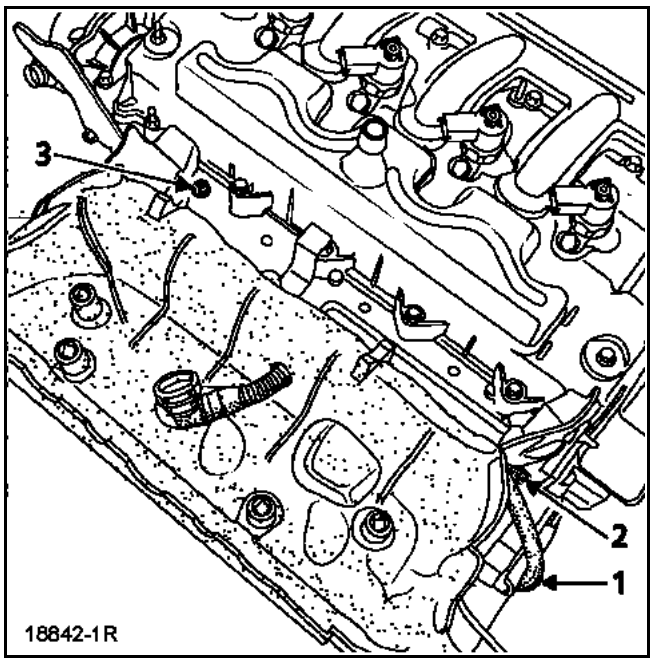

– the rail protector with the side partition, then remove the partition of the central section.

Separate the rubber flap from the lower metal protector.

REFITTING

Refit the rubber flap to the lower metal protector by pulling on the five rubber sockets (4). **Check that the rubber sockets are correctly positioned.**

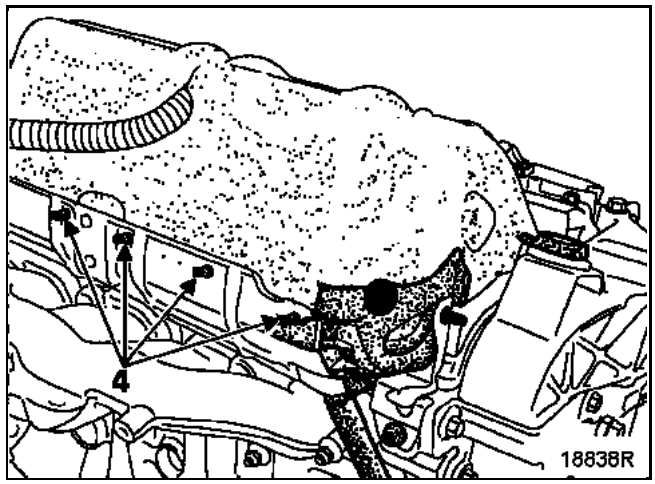

Put **Rhodorseal 5661** on the cylinder head in the area marked by a black line on diagram.

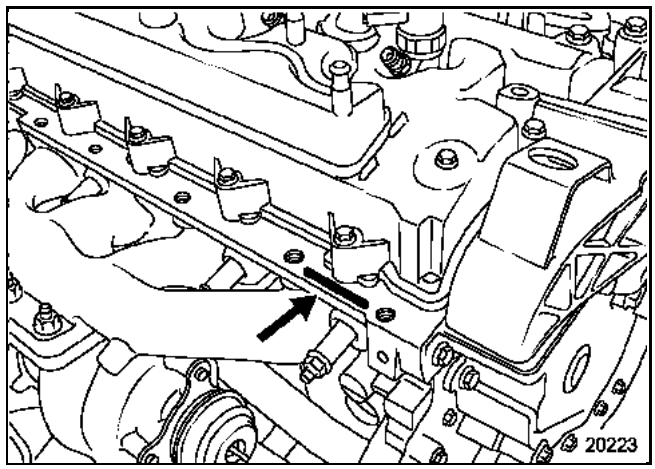

Refit the rubber flap/lower metal protector assembly to the engine by refitting the lower metal protector mounting bolt (3).

GETtheMANUALS.org

Refit the injection rail with its partition without tightening the rail mounting bolts.

Remove the caps from the rail, the injector holders, the pump and the injection pipes.

Fit the injection pipes between the rail and the injectors and between the pump and the rail, then pretighten by hand until they touch.

Tighten to a torque of:
– the three rail mounting bolts to **2.3 daNm**,
– the injection pipe unions on the injectors and the high pressure pump to **2.5 daNm**,
– the injection pipe unions on the rail to **2.5 daNm**.

Put **Rhodorseal 5661** on the cylinder head in the area marked by a black cross on the diagram.

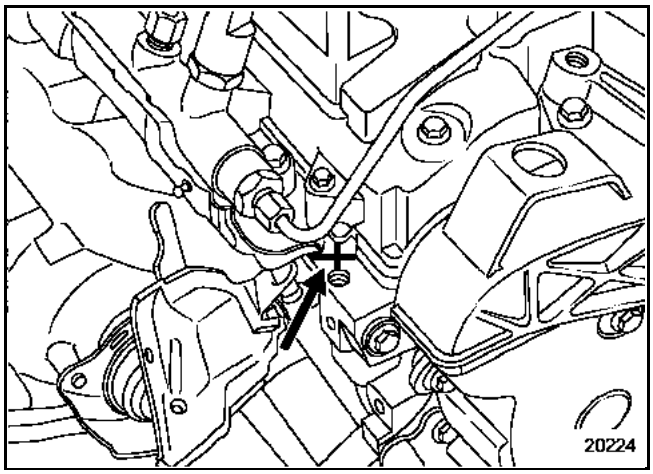

To refit the side partition on the lower metal protector it is **essential** that you use the following method:
– fit the lower strap (5),
– fit the rubber ring (6) of the partition onto the lower metal protector,
– then mount the upper section of the partition on the metal protector,

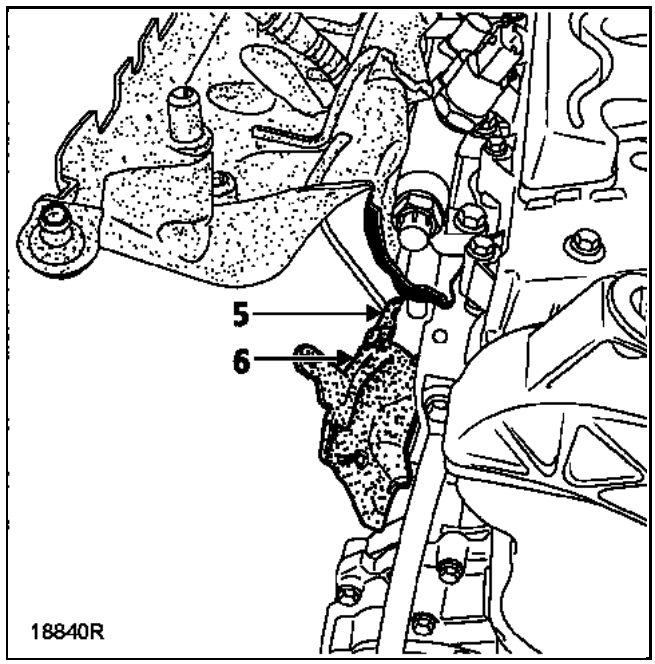

– fit the upper strap (7),
– refit the partition mounting bolts (8),
– reconnect the diesel drain pipe (9), checking that it is not blocked.

It is essential to replace this if it has been contaminated with diesel.

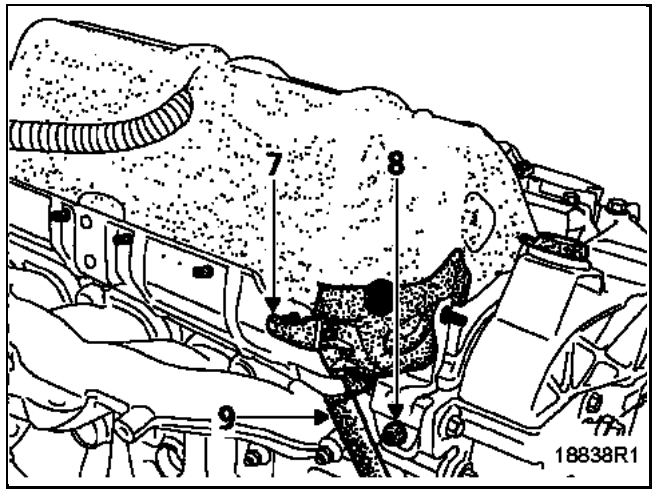

GETtheMANUALS.org

Refit:
– the sound-proofing pads, replacing the pieces if they are damaged or saturated with diesel,

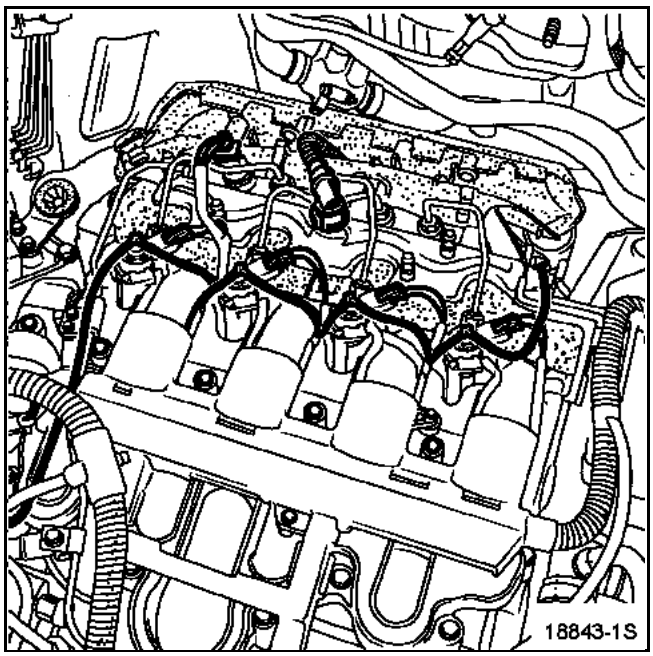

Check that the mark (10) on the rail partition is positioned correctly (in the axis of the high pressure rail outlets).

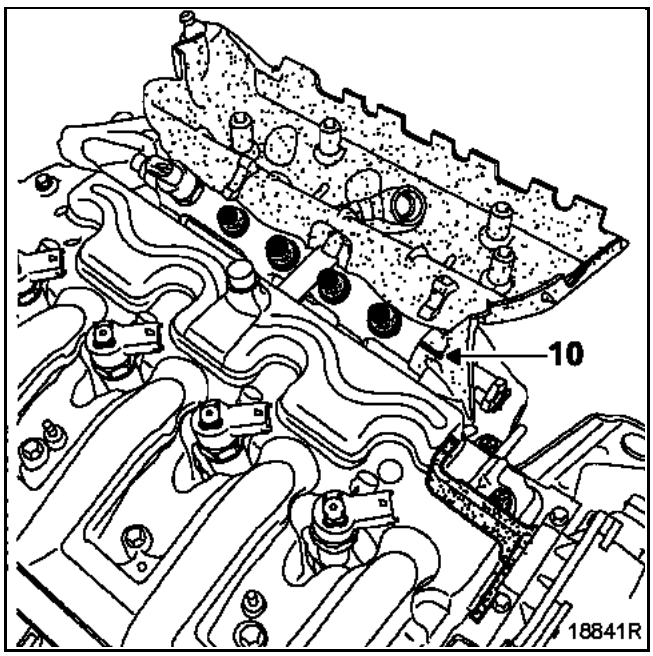

Reconnect the injectors and the rail pressure sensor.

Refit a new diesel return pipe ensuring that the mounting clips are properly fitted at the injectors and at the end of the rail at the overpressure valve.

Fold the rubber flap to the front and clip the side sealing partitions to it.

Check that the clip buttons are correctly fastened to the partitions and that the rubber flap end panels are correctly positioned.

IMPORTANT:
Check that the diesel drain pipe is correctly reconnected and replace it if it has been contaminated with diesel.

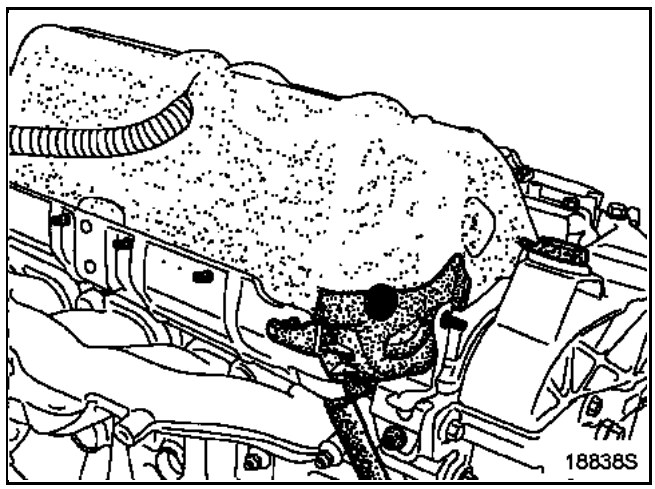

GETtheMANUALS.org

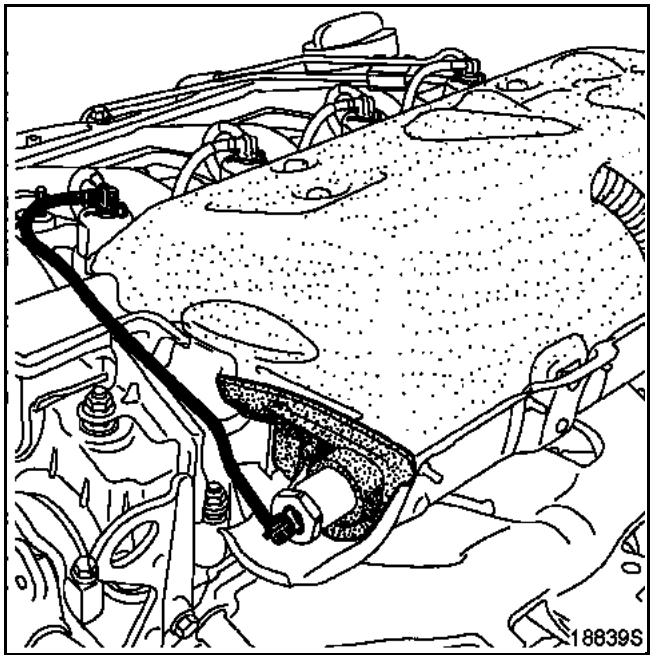

Reclip the rubber flap to the rocker cover and the engine mounting.

Check that the rubber flap is correctly positioned on the rocker cover studs and the engine mounting.

Re-prime the system by switching on the ignition several times, or run the low pressure pump with the fault finding tool using the "**Actuator Commands**" menu.

Use the fault finding tool to clear any faults which may be stored in the injection computer before restarting the engine.

After carrying out any work, check that there are no leaks in the diesel circuit.

Proceed as follows:
– run the engine at idle speed until the engine cooling fan starts up,
– accelerate several times with no load,
– carry out a road test,
– switch the ignition off and check that there is no diesel fuel leakage,
– check that the absorbent soundproofing pads are not saturated with diesel fuel.

GETtheMANUALS.org

GENERAL INFORMATION

The accelerator pedal potentiometer is built into in the accelerator pedal. To replace it you must replace the accelerator pedal.

There are two types of pedal: **with or without hard point**.

Cars equipped with cruise control/speed limiter have an accelerator pedal with a hard point at the end of their travel (kickdown).

This hard point makes it possible to deactivate the speed limiter function if the driver has to increase his speed.

IMPORTANT:

A pedal fitted with a hard point may be fitted in place of a pedal without a hard point. However, fitting a pedal without a hard point in place of a pedal with a hard point is prohibited.

REMOVAL

Disconnect the battery.

Remove:
– disconnect the accelerator pedal connector (1),
– remove the three pedal mounting screws (2),
– remove the pedal.

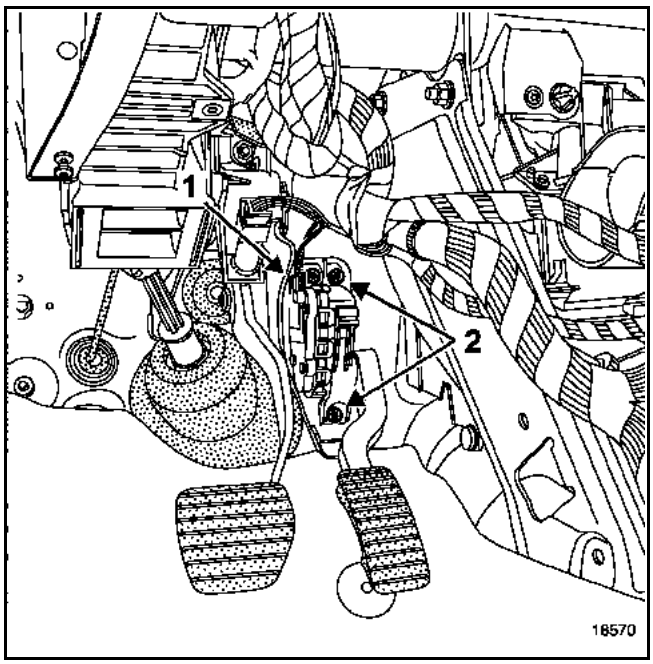

REFITTING

Refitting is the reverse of removal.

Allocation of tracks:

Track	Description
1	Track 2 earth
2	Track 1 earth
3	Track 1 signal
4	Track 1 supply
5	Track 2 supply
6	Track 2 signal

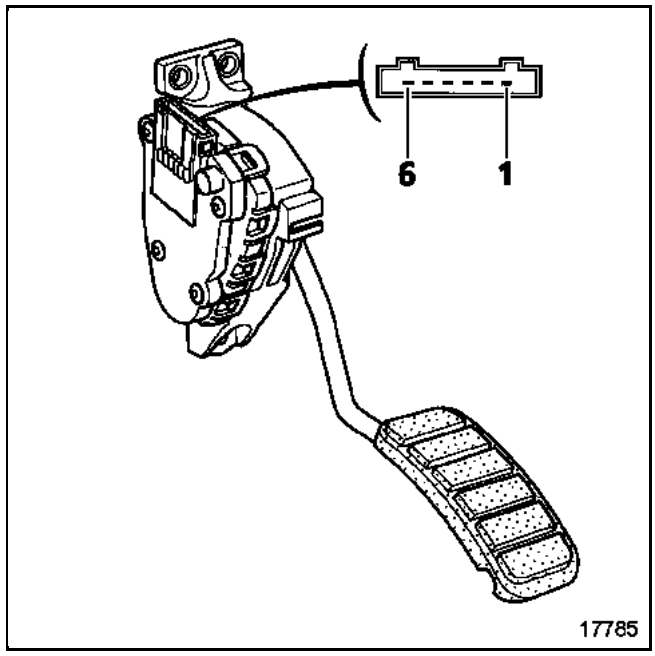

NOTE:

An accelerator position potentiometer fault causes changes in the idle speed or engine operation (see Section **13B "Idle speed adjustment"**).

GETtheMANUALS.org

SPECIAL TOOLING REQUIRED	
Mot. 1372	Tamperproof bolt extractor

GENERAL INFORMATION

The injection computer is located under the battery tray. To remove it, the battery tray must be removed, which is held in place by three tamperproof screws.

REMOVAL

Remove the engine covers.

Disconnect the battery.

P9X engine

Disconnect the air flowmeter connector (1).

Disconnect the oil vapour rebreathing pipe (2).

Remove the air inlet duct (3) complete with the flowmeter. To do this, remove:
– the two mounting bolts on the air flowmeter,
– the clip on the air resonator and then on the turbocharger.

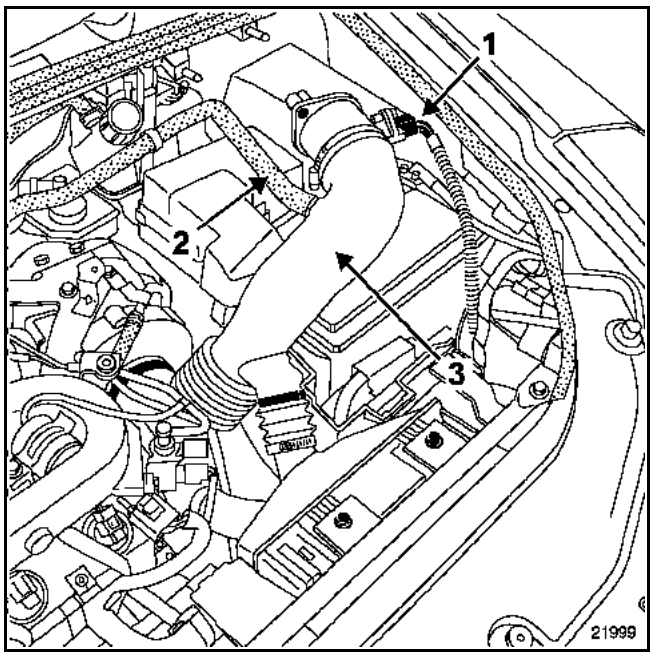

All types

Unclip then remove the relay unit from the side.

Remove the battery.

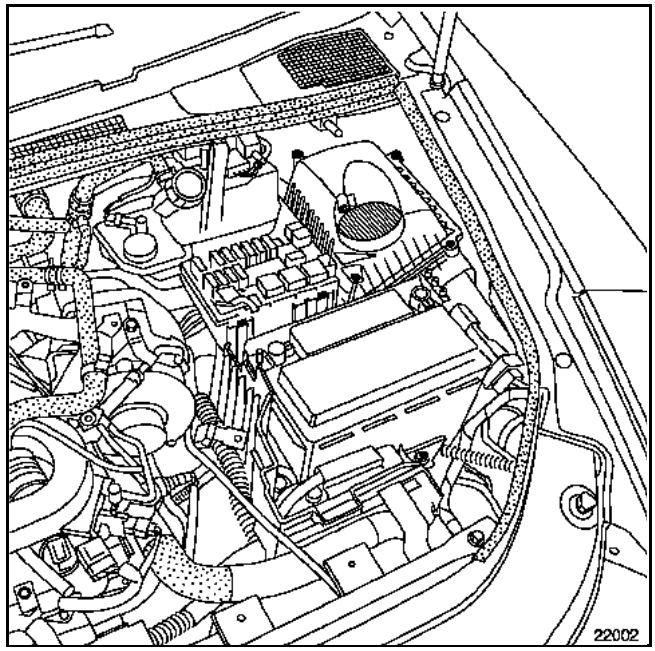

GETtheMANUALS.org

Disconnect then remove the automatic transmission computer (if fitted).

Remove the connector carrier on the battery tray.

Pierce the three tamperproof bolts using a **5-mm** diameter drill bit in the bolt shaft.

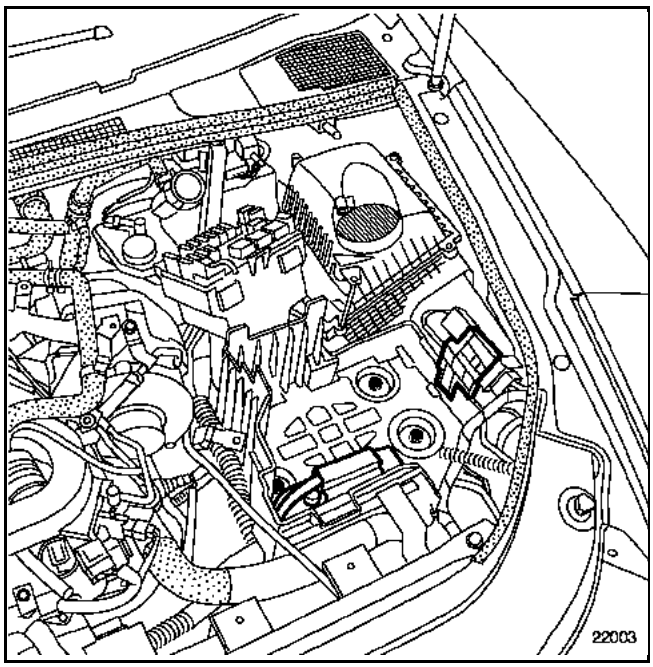

Remove:
– the three battery tray mounting screws, using tool **Mot. 1372**,

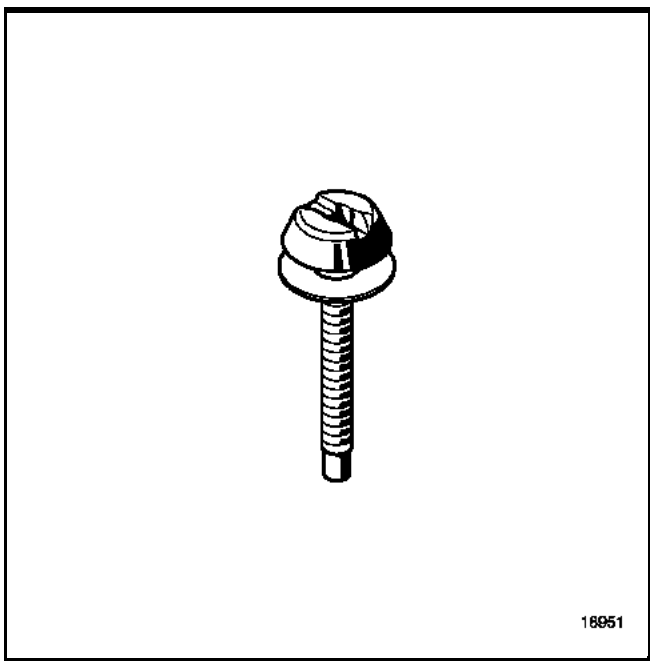

– the battery tray,
– the electric wiring harness mounting clamp (4),
– the computer mounting nuts (5),
– the computer and disconnect it.

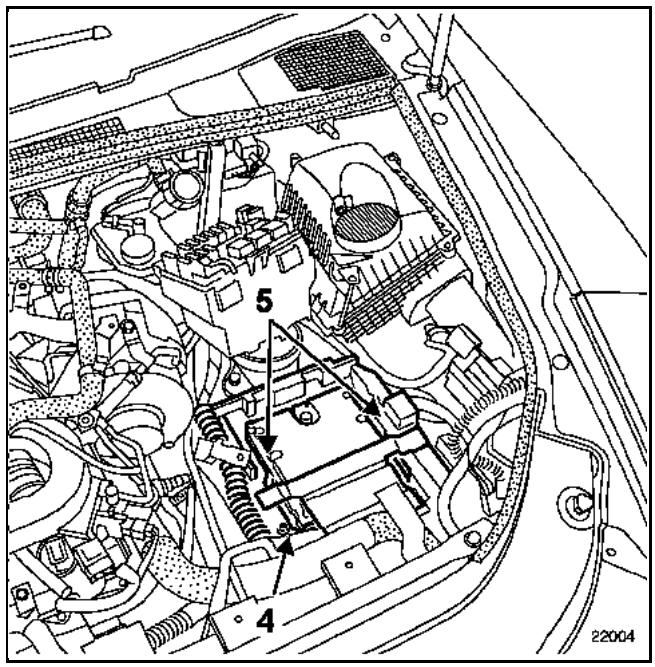

REFITTING

Proceed in the reverse order to removal.

Replace the tamperproof screws with new ones.

Carry out the programming on the immobiliser code following the procedure described in section **82A "Engine immobliser"**.

If necessary repair the faults that appear, then clear them.

Check that the vehicle is operating correctly.

GETtheMANUALS.org

REMOVAL

Remove the engine covers.

Disconnect:
– the battery,
– the air flowmeter connector (1),
– the oil vapour rebreathing pipe (2).

Remove the air inlet duct (3) complete with the flowmeter. To do this, remove:
– the two mounting bolts on the air flowmeter,
– the clip on the air resonator and then on the turbocharger.

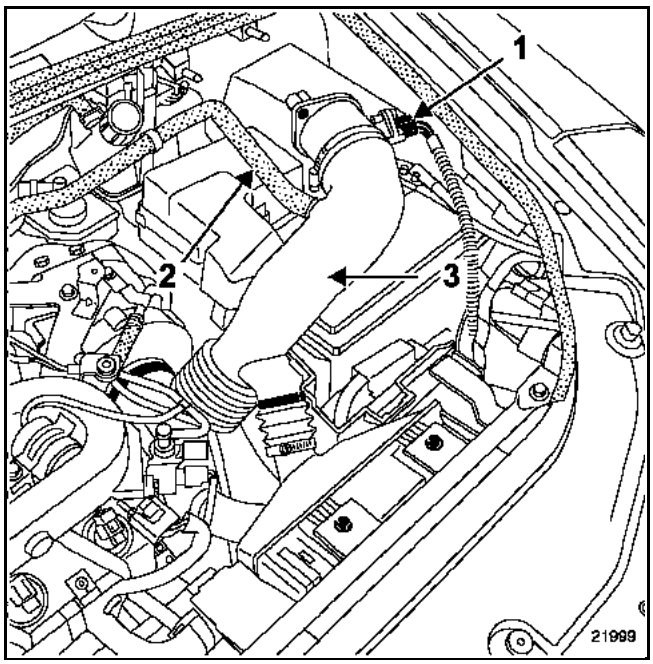

Unclip then remove the relay unit from the side.

Remove the battery.

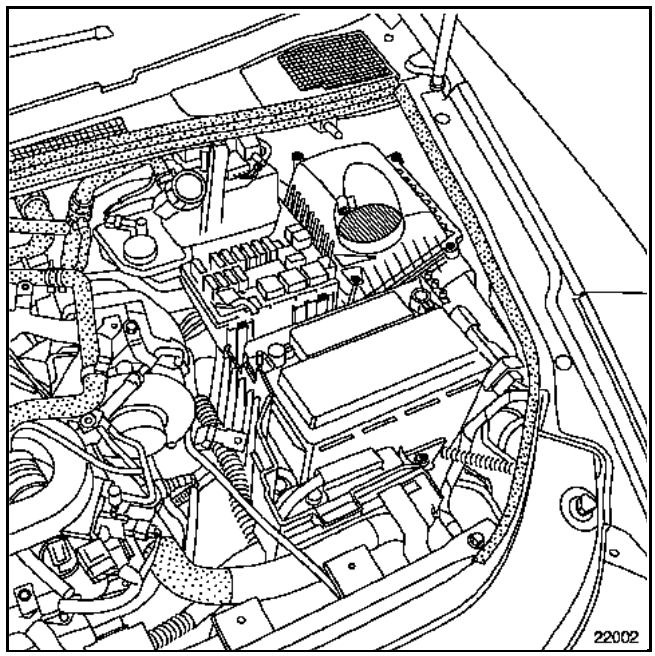

Release the connector carrier (4) from the side.

Remove:
– the air filter box (5),

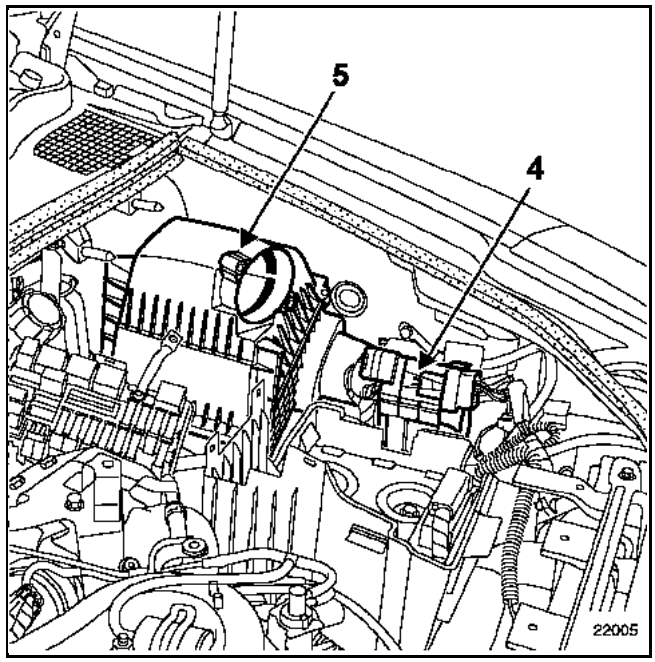

GETtheMANUALS.org

– the power computer (6) having disconnected it.

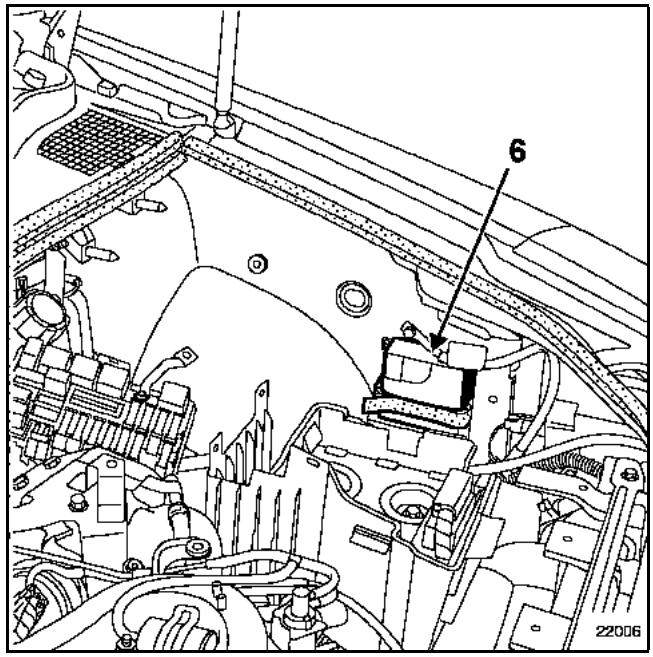

REFITTING

Proceed in the reverse order to removal.

Turn the engine on and read the fault codes using the fault finding tool.

If necessary repair the faults that appear, then clear them.

Check that the vehicle is operating correctly.

GETtheMANUALS.org

Vehicles with the high pressure diesel injection system are fitted with a glow plugs "on" tell-tale light, two injection warning lights and a coolant temperature warning light which can all be seen on the instrument panel.

The glow plugs "on" tell-tale light is represented by an orange coil along with the "diesel preheating" message. The severity 1 injection fault warning light is represented by an orange sine curve along with the "injection fault" message. The level 2 injection fault warning light is represented by an engine with the word "stop" in red along with the "switch off engine" message. The coolant temperature warning light is represented by a red thermometer along with the "coolant temperature" message.

PRINCIPLE OF WARNING LIGHT ACTIVATION

- The glow plugs "on" light illuminates when the ignition is switched on, remains on during the preheating phase and then goes out (see **Section 13C "Pre-postheating control"**).

- If an injection fault (severity 1) occurs, the "injection fault" warning light comes on, requiring an inspection by a Renault dealer. These faults are:
  – internal computer fault,
  – engine immobiliser fault,
  – engine speed synchronisation fault,
  – accelerator potentiometer fault,
  – air flowmeter fault,
  – vehicle speed sensor fault (see ABS system),
  – exhaust gas recirculation valve fault,
  – turbocharging pressure regulation solenoid valve fault,
  – main relay fault,
  – after ignition key fault,
  – injector fault,
  – injector correction fault (IMA),
  – sensor feed fault,
  – inlet flap fault,
  – swirl flap fault.

- When an injection fault of severity 2 occurs, the "switch off ignition" warning light illuminates. The engine must be switched off immediately if this happens. These faults are:
  – internal computer fault,
  – injector fault,
  – rail pressure sensor fault,
  – rail pressure regulator fault,
  – engine speed synchronisation fault.

- When the engine overheats, the coolant temperature warning light comes on.

GETtheMANUALS.org

Vehicles with the high pressure diesel injection system have fault symbols and written messages which appear clearly on the instrument panel display.

PRINCIPLE OF WARNING LIGHT ACTIVATION

- The glow plugs "on" light comes on when the ignition is switched on, remains on during the preheating phase and then goes out (see **Section 13 Pre/post-heating control**).

- When there is an injection fault (level 1), the orange symbol (indicated by a sine curve), appears along with the words FUEL INJECTION FAULT then SERVICE. Depending on the vehicle equipment, the voice synthesiser gives out the message "Level 1 faults".
  These faults are:
  – air flowmeter fault,
  – wastegate position sensor fault,
  – coolant temperature sensor fault,
  – rail pressure sensor fault,
  – atmospheric pressure sensor fault,
  – turbocharging pressure sensor fault,
  – accelerator pedal potentiometer fault,
  – engine speed sensor fault,
  – cylinder reference sensor fault,
  – exhaust gas recirculation valve fault,
  – injection locking relay feed voltage fault,
  – turbocharging pressure regulation solenoid valve fault,
  – diesel pressure regulator fault,
  – injector fault,
  – power computer fault,
  – injection computer fault.

- When an injection fault of severity 2 occurs, the red symbol (represented by an engine and the word "STOP") appears with the written message "SWITCH OFF IGNITION" followed by the written message "STOP". Depending on the vehicle equipment level, the voice synthesiser gives out the message "Level 2 faults". In this event the vehicle will stop immediately.
  These faults are:
  – engine speed sensor and cylinder reference sensor signal consistency fault,
  – injection locking relay feed voltage fault,
  – computer feed voltage fault,
  – diesel pressure regulator fault,
  – injector fault,
  – power computer fault,
  – injection computer fault.

- When the engine overheats, the engine temperature fault symbol appears on the display as "COOLANT TEMPERATURE" followed by "STOP". In this event the vehicle will stop immediately.

NOTE:
The orange OBD warning light (symbolised by an engine), displayed when the ignition is switched on, is never displayed when the engine is running.

GETtheMANUALS.org

This vehicle is fitted with a 3rd generation engine immobiliser system, controlled by a RENAULT card recognition system with random rolling code which requires a specific method for replacing the computer.

REPLACING AN INJECTION COMPUTER

See Section **13B Injection "Computer"** for computer removal and reinstallation methods.
See **Section 82A "Immobiliser"** for the immobiliser functions.

Injection computers are supplied without a code, but they can all be programmed with one.

When the computer is replaced, the vehicle code must be programmed in and then a check must be made to ensure that the immobiliser system is operational.

To do this, switch on the ignition for a few seconds without starting the engine, then switch it off. With the ignition off, the engine immobiliser function comes into operation after approximately **10 seconds** (the red engine immobiliser warning light flashes).

WARNING:

With this engine immobiliser system, the computer keeps its immobiliser code for life.

In addition, this system does not have a security code.

Consequently, it is forbidden to perform tests with computers borrowed from the stores or from another vehicle which must then be returned.

It will no longer be possible to decode them.

GETtheMANUALS.org

THIS VEHICLE IS FITTED WITH A VARIABLE OUTPUT COMPRESSOR

AIR CONDITIONING - INJECTION COMPUTER CONNECTION

The injection computer controls the compressor clutch, taking into account the power absorbed by the compressor and the pressure of the refrigerant in the circuit.

The data used for the air conditioning function is exchanged via the multiplex network:
– track **A A4** multiplex connection CAN L (passenger compartment),
– track **A B4** multiplex connection CAN H (passenger compartment).

When the air conditioning is switched on, the air conditioning computer requests authorisation to engage the compressor clutch. The injection computer either authorises or denies the compressor clutch, and controls the fan assembly.

When the air conditioning function is selected, the idling speed is not altered.

COMPRESSOR OPERATION PROGRAMMING

During certain operating phases, the injection computer disables the compressor.

Engine starting program

Compressor operation is forbidden when the engine is started for a period of between **2 seconds** and **8 seconds**.

Recovery of performance

During a significant change in the position of the accelerator pedal, if the engine speed is less than **3000 rpm** and if the vehicle speed is less than **70 mph (110 km/h)**, operation of the compressor is prohibited.

Recovery of output when the vehicle starts moving

If the potentiometer is greater than **46 %**, if the engine speed is less than **2250 rpm**, and if the vehicle speed is less than **20 km/h**, (in 1st gear), the compressor is cut off.

Anti-stalling function

During throttle-off, if the engine speed is below **675 rpm**, the compressor clutch is disengaged. It is re-engaged when the engine speed exceeds this figure.

Thermal protection strategy

The compressor does not engage in cases where the coolant temperature is greater than **+110 °C**.

GETtheMANUALS.org

INJECTION COMPUTER / AIR CONDITIONING COMPUTER CONNECTION

The compressor is of variable displacement type.

The injection computer authorises or disallows operation of the compressor depending on the information supplied by the air conditioning computer and the engine operating conditions.

The data used for the function is exchanged via the multiplex network:
– track **A 67** multiplex connection CAN H,
– track **A 48** multiplex connection CAN L.

When the air conditioning is switched on, the air conditioning control panel requests authorisation to engage the compressor clutch. The injection computer either authorises or inhibits engagement of the compressor clutch, controls the fan unit and orders fast idle speed. This speed is **750 rpm**.

COMPRESSOR OPERATION PROGRAMMING

During certain operating phases, the injection computer disables the compressor.

Engine starting program

Operation of the compressor is inhibited for **1 second** after the engine is started.

Recovery of performance

During a significant change in the position of the accelerator pedal, if the engine speed is less than **4000 rpm**, operation of the compressor is inhibited for **4.5 seconds**.

Thermal protection strategy

The compressor does not engage in cases where the coolant temperature is greater than **+113 °C**.

GETtheMANUALS.org

IDLE SPEED CORRECTION ACCORDING TO COOLANT TEMPERATURE

In all cases, this idling speed correction is deactivated **3 minutes** after the engine is started.

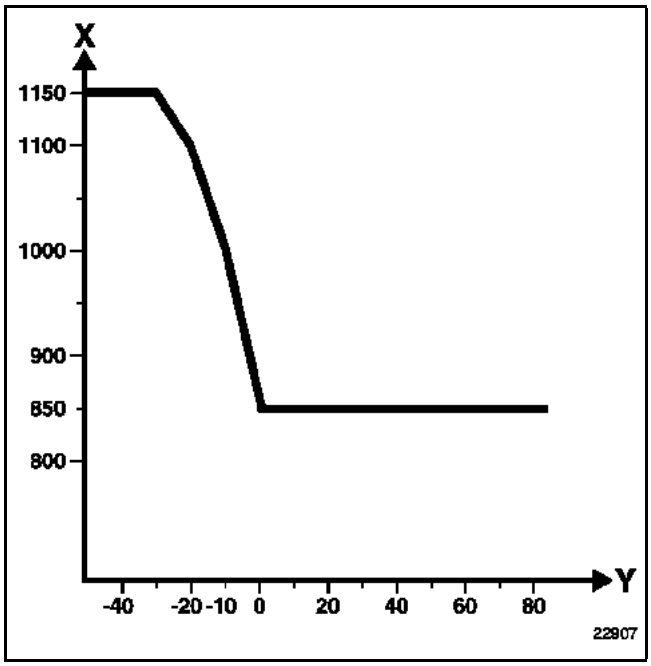

X: Engine speed in **rpm**.
Y: Coolant temperature in °**C**

IDLE SPEED CORRECTION WHEN THE POTENTIOMETER IS FAULTY

If the accelerator pedal potentiometer is faulty (both tracks), idle speed is set to **1200 rpm**.

If the signal from the accelerator pedal position potentiometer and the brake switch signal are inconsistent, the speed is changed to **1250 rpm**.

IDLE SPEED CORRECTION WHEN DRIVING

The idle speed when driving is **850 rpm**, with the vehicle moving at more than **1.5 mph (2.5 km/h)**.

GETtheMANUALS.org

IDLE SPEED CORRECTION ACCORDING TO COOLANT TEMPERATURE

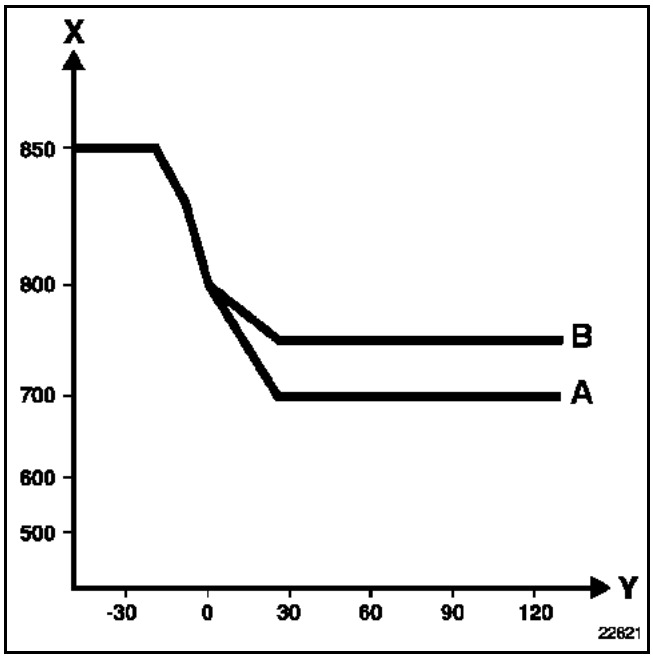

X: Engine speed in **rpm**.
Y: Coolant temperature in °**C**

A: without air conditioning
B: with air conditioning

IDLE SPEED CORRECTION IN THE EVENT OF A PEDAL POTENTIOMETER FAULT

If the accelerator pedal potentiometer is faulty, idle speed is held at **1000 rpm**.

If the information from the accelerator pedal position potentiometer and the brake switch does not correspond, the speed is changed to **1000 rpm**.

IDLE SPEED CORRECTION IN THE EVENT OF A COMPONENT FAULT

In the event of a fault, short circuit or signal incoherence on a component in the engine management system, the idle speed is increased to **1000 rpm** (see Workshop Repair Manual **Fault Finding: Interpretation of faults**).

IDLE SPEED CORRECTION ACCORDING TO BATTERY VOLTAGE

The aim of this correction is to compensate for the drop in voltage caused when the rear screen de-icer is switched on.

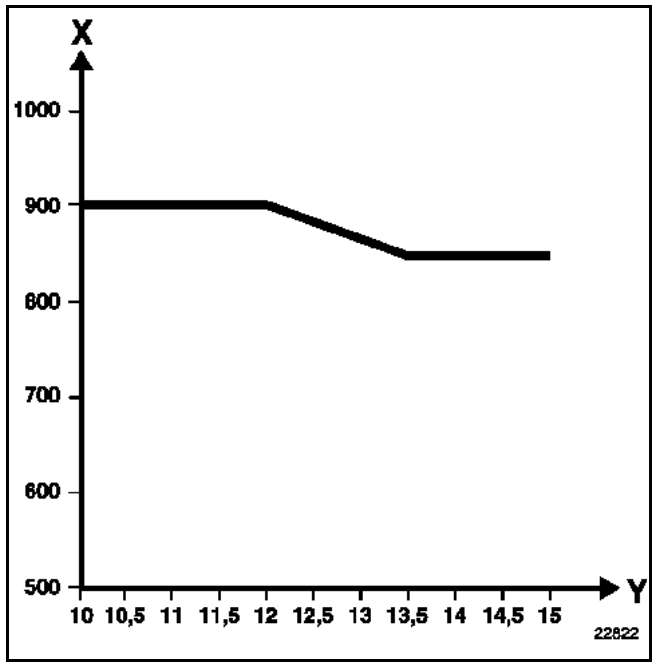

X: Engine speed in **rpm**.
Y: Battery voltage

GETtheMANUALS.org

The four thermoplungers are located in a plenum chamber mounted on the engine lifting bracket next to the vacuum pump.

The purpose of the system is to reheat the coolant.

The thermoplungers are supplied with **12 V** by three relays. One relay controls two thermoplungers, the two other relays control one thermoplunger each. This enables control of one, two, three or four thermoplungers as required.

The resistance of the thermoplungers is:
0.45 ± 0.05 Ω at **20 °C**.

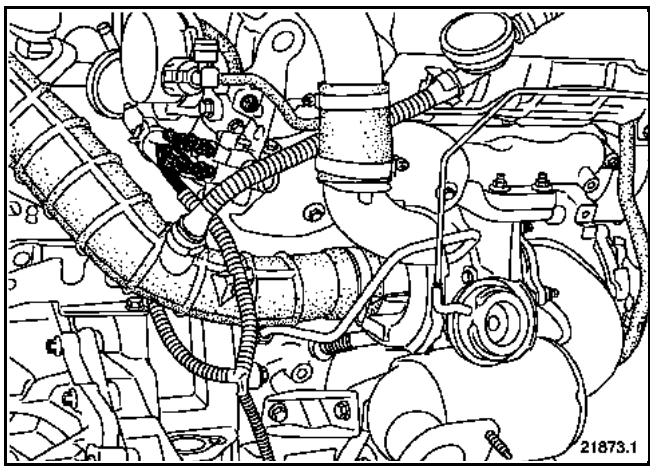

Control strategy

When the thermoplungers are operating, the idling speed is increased to **900 rpm**.

Thermoplungers cannot operate:
– preheating,
– if the engine speed is below **700 rpm**.

If the conditions mentioned above apply, the thermoplungers are controlled according to a cartographic map related to the air and coolant temperature.

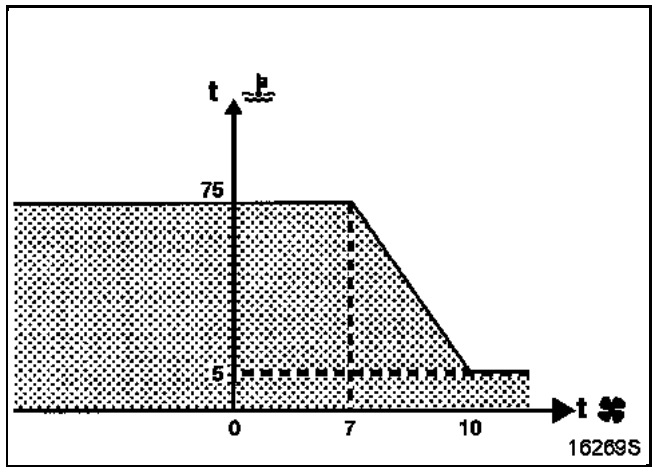

Unshaded area: thermoplunger not supplied
Shaded zone: thermoplunger supplied

GETtheMANUALS.org

The four thermoplungers are located in a plenum chamber mounted on the rear cylinder head.

The purpose of the system is to reheat the coolant.

The thermoplungers are supplied with **12 V** by three relays. One relay controls two thermoplungers, the two other relays control one thermoplunger each. This enables control of one, two, three or four thermoplungers as required.

The resistance of the thermoplungers is:
0.45 ± 0.05 Ω at **20 °C**.

Control strategy

When the thermoplungers are operating, the idling speed is increased to **900 rpm**.

Thermoplungers cannot operate:
– for **20 seconds** after the engine is started,
– during preheating,
– if the engine speed is below **600 rpm**.

If the conditions mentioned above apply, the thermoplungers are controlled according to a cartographic map related to the air and coolant temperature.

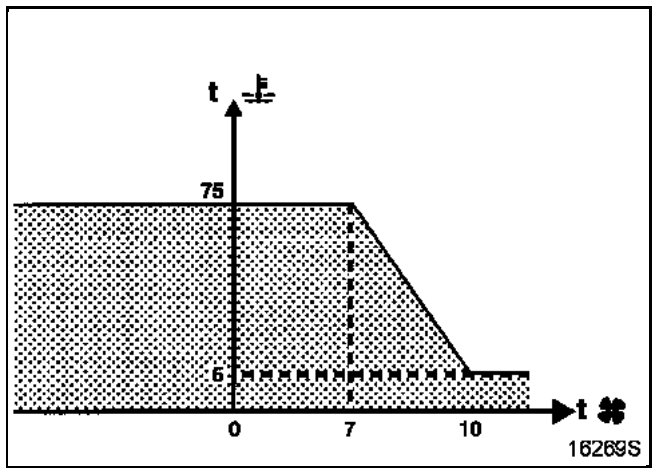

Unshaded area: thermoplunger not supplied
Shaded zone: thermoplunger supplied

GETtheMANUALS.org

THERMOPLUNGER CONTROL PROGRAMMING

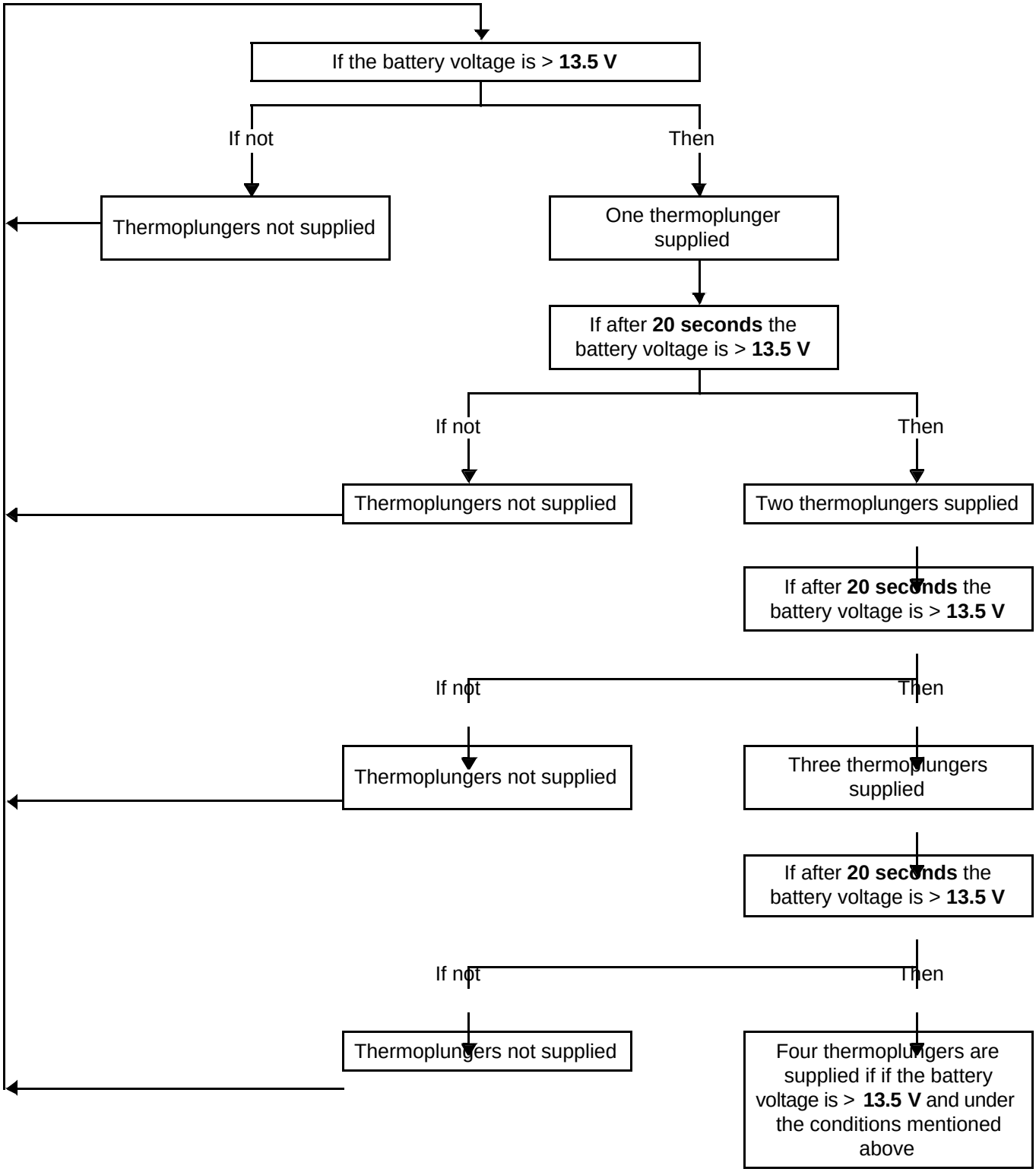

GETtheMANUALS.org

THERMOPLUNGER CONTROL STRATEGY

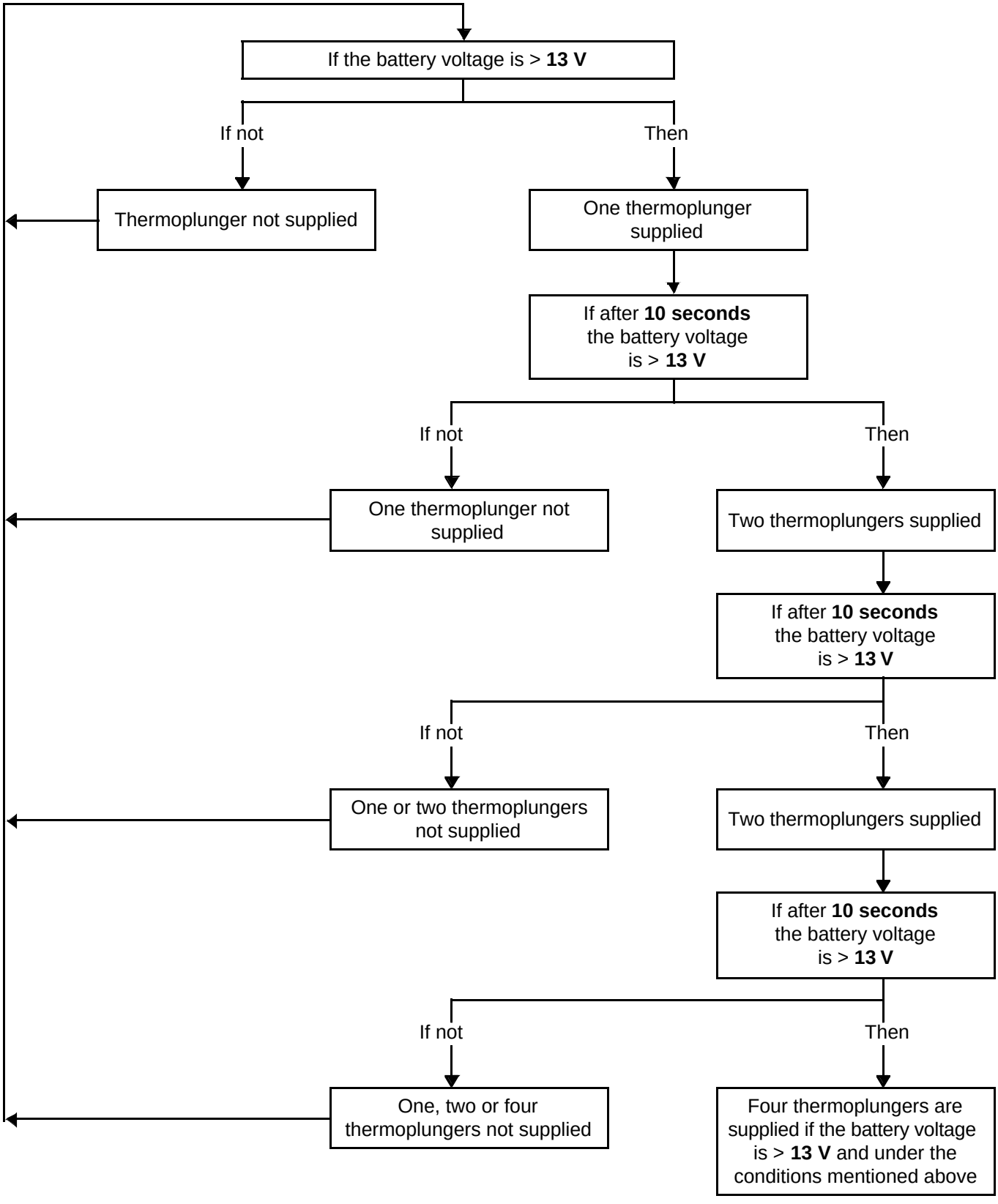

GETtheMANUALS.org

GENERAL INFORMATION

The cruise control or adaptive cruise control: can maintain a speed selected by the driver and can adapt vehicle speed to the speed of the moving vehicle in front in the case of adaptive cruise control. This function can be deactivated at any moment by depressing the brake pedal or the clutch pedal, or by using one of the system buttons.

Speed limiter: allows the driver to set a speed limit. The accelerator pedal has no effect above the set speed. The speed limit selected can be exceeded at any time by pressing the accelerator pedal beyond its point of resistance.

A warning light on the instrument panel lets the driver know the status of the cruise control/speed limiter with distance control:
– Green light: cruise control in operation.
– Amber light: speed limiter in operation.
– Indicator light flashing: the cruising speed cannot be maintained (e.g. going downhill).

To control these functions, the injection computer receives the following signals on the following tracks:
– **A F2:** Speed limiter On / Off
– **A D2:** Speed control On / Off or adaptive cruise control
– **A B2:** Steering wheel mounted switch supply
– **A A2:** Steering wheel switch signal
– **A F3:** Brake light switch open input
– **A E2:** Clutch switch input (depending on version)
– **A E1:** Pedal potentiometer 1 supply
– **A H2:** Pedal potentiometer 2 supply
– **A B3:** Pedal potentiometer 1 earth
– **A A3:** Pedal potentiometer 2 earth
– **A C1:** Pedal potentiometer 1 signal
– **A F1:** Pedal potentiometer 2 signal
– **A A4:** Multiplexing CAN L (passenger compartment)
– **A B4:** Multiplexing CAN H (passenger compartment)
– **B A1:** Multiplexing CAN H (engine)
– **B B1:** Multiplexing CAN L (engine)

The following signals are received by the injection computer via the multiplex network:
– Vehicle speed (ABS system).
– Brake switch closed signal (ABS).
– Which gear is engaged (Automatic gearbox)

The injection computer sends the following signals over the multiplex network:
– Cruise control or speed limiter setting to the instrument panel.
– Warning light coming on (amber, green or flashing).
– Gear change signals from the gearbox (depending on version).

The injection computer receives:
- signals from the accelerator pedal
- brake switch signal
- clutch switch signal
- Start/Stop switch signals
- signals from the steering wheel switches
- ABS computer signals
- signals from the automatic transmission computer.

The injection computer controls the solenoid injectors using these signals to maintain the speed set by the cruise control function and to adapt the vehicle speed to that of the vehicle in front in the case of adaptive cruise control, and not to exceed the cruising speed set by the speed limiter function.

GETtheMANUALS.org

GENERAL INFORMATION

The cruise control or adaptive cruise control: can maintain a speed selected by the driver and can adapt vehicle speed to the speed of the moving vehicle in front in the case of adaptive cruise control. This function can be switched off at any moment by depressing the brake pedal or by using one of the system buttons.

Speed limiter: allows the driver to set a speed limit. The accelerator pedal has no effect above the set speed. The speed limit selected can be exceeded at any time by pressing the accelerator pedal beyond its point of resistance.

A warning light on the instrument panel lets the driver know the status of the cruise control/speed limiter with distance control:
– Green light: cruise control in operation.
– Amber light: speed limiter in operation.
– Indicator light flashing: the cruising speed cannot be maintained (e.g. going downhill).

To control these functions, the injection computer receives the following signals on the following tracks:
– **A 23:** Speed limiter On / Off
– **A 81:** Speed control On / Off or adaptive cruise control
– **A 11:** Steering wheel switch earth
– **A 10:** Steering wheel switch signal
– **A 21:** Stop light switch open input

– **A 7:** Pedal potentiometer 1 supply
– **A 26:** Pedal potentiometer feed 2
– **A 31:** Pedal potentiometer earth 1
– **A 11:** Pedal potentiometer earth 2
– **A 27:** Pedal potentiometer signal 1
– **A 8:** Pedal potentiometer 2 signal
– **A 48:** CAN L multiplexing
– **A 67:** CAN H multiplexing

The following signals are received by the injection computer via the multiplex network:
– Vehicle speed (ABS system).
– Brake light switch closed signal (ABS system).
– Which gear ratio is engaged (Automatic transmission)

The injection computer sends the following signals over the multiplex network:
– Cruise control or speed limiter setting to the instrument panel.
– Warning light coming on (amber, green or flashing).
– Gear change signals from the gearbox (depending on version).

The injection computer receives:
- signals from the accelerator pedal
- brake switch signal
- signals from the Start / Stop switch
- signals from the controls at the steering wheel
- ABS system computer signals
- signals from the automatic transmission computer.

The injection computer controls the solenoid injectors using these signals to maintain the speed set by the cruise control function and to adapt the vehicle speed to that of the vehicle in front in the case of adaptive cruise control, and not to exceed the speed set by the speed limiter function.

GETtheMANUALS.org

CRUISE CONTROL OPERATION

Entry conditions
- switch on cruise control
- gear engaged >**2nd gear**
- minimum vehicle speed **18 mph (30 km/h)**, maximum **120 mph (200 km/h)** (for information purposes)
- cruise control warning light on (green)
- press on "+", "-" or "recall" button.

Output conditions
- press down on the accelerator pedal (temporary exit)
- brake or clutch pedal must be depressed
- press "0"
- switch on "Off"
- electronic stability program system must be switched on

DISTANCE CHECK ASSISTANCE OPERATION

Entry conditions
- switch on distance check assistance
- minimum vehicle speed **31 mph (50 km/h)** maximum **111 mph (180 km/h)** (for information purposes)
- cruise control warning light on (green)
- press on "+", "-" or "recall" button.

Output conditions
- press down on the accelerator pedal (temporary exit)
- brake pedal depressed
- press "0"
- switch on "Off"
- electronic stability program system must be switched on
- vehicle speed less than **18 mph (30 km/h)**

SPEED LIMITER OPERATION

Entry conditions
- switch on speed limiter
- gear engaged >**2nd gear**
- minimum vehicle speed **18 mph (30 km/h)**, maximum **120 mph (200 km/h)** (for information purposes)
- limiter warning light on (amber)
- press on "+", "-" or "recall" button.

Output conditions
- brief sharp pressure on the accelerator pedal (past the hard point).
- extended pressure on the brake pedal
- press "0"
- switch on "Off"
- electronic stability program system must be switched on

NOTE:
The warning light flashes to inform the driver that the set speed cannot be maintained.

Defect mode
When there is a breakdown or fault on:
The directional stability control system, the injection system, the Anti-lock braking system.
The cruise control/speed limiter and adaptive cruise control can no longer be activated.

GETtheMANUALS.org

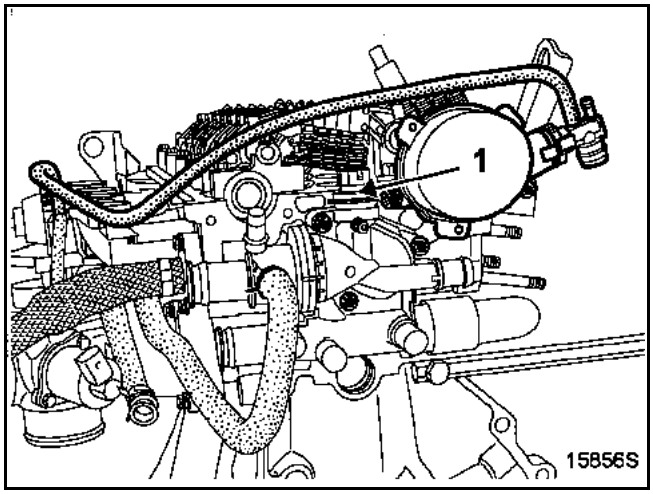

The coolant temperature sensor (1) (injection and coolant temperature indicator on the instrument panel) is a three-track sensor.
Two tracks for sending the coolant temperature signal to the computer (tracks **B E1** and **B K3**) and one track for display on the instrument panel.

This system allows the engine cooling fan to be controlled by the injection computer. It consists of a single temperature sensor used for the injection, the engine cooling fan, the temperature indicator and the temperature warning light on the instrument panel.

OPERATION

The injection computer controls the following according to the coolant temperature:
– the injection system,
– the engine cooling fan relay:
- the fan unit is switched on at slow speed if the coolant temperature exceeds **99°C** and is switched off when the temperature falls below **95°C**,
- the fan unit is switched on at high speed if the coolant temperature exceeds **102°C** and is switched off when the temperature falls below **99°C**,
- the fan assembly can be activated (at slow speed) for the air conditioning.

COOLANT TEMPERATURE WARNING LIGHT

The warning light is controlled by the injection computer on the multiplex network.

It illuminates when the coolant temperature exceeds **120°C** and goes out when the temperature falls below **115°C**.

GETtheMANUALS.org

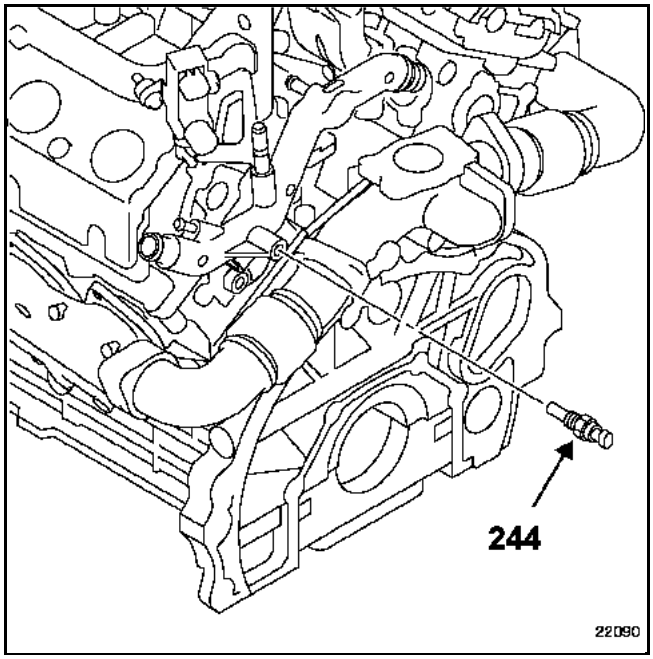

Coolant temperature sensor (244) (injection and coolant temperature indication on instrument panel).

This system allows the engine cooling fan to be controlled by the injection computer. It consists of a single temperature sensor used for the injection, the engine cooling fan, the temperature indicator and the temperature warning light on the instrument panel.

The coolant temperature information is sent to the instrument panel by the injection computer on the multiplex network.

OPERATION

The injection computer controls the following according to the coolant temperature:
– the injection system,
– the engine cooling fan relays:
- the fan unit is switched on at low speed if the coolant temperature exceeds **99°C** and is switched off when the temperature falls below **96°C**.
- the fan unit is switched on at high speed if the coolant temperature exceeds **102°C** and is switched off when the temperature falls below **99°C**,
- the fan unit can be controlled for the air conditioning.

COOLANT TEMPERATURE WARNING LIGHT (shared with the injection fault warning light)

The warning light is controlled by the computer via the multiplex network.

It lights up when the coolant temperature exceeds **120°C** and goes out at **117°C**.

GETtheMANUALS.org

OPERATING PRINCIPLE

The antipercolation system is controlled directly by the injection computer.

The coolant temperature signal is taken from the coolant temperature sensor of the injection system (see section **13B "Centralised coolant temperature management"**).

The injection computer switches to monitoring mode for **2 minutes** after the ignition is switched off.

If the coolant temperature exceeds **112 °C**, the fan low speed relay is energised.

If the coolant temperature falls back below **105 °C**, the fan assembly relay is cut off (the aseembly cannot operate for more than **10 minutes**).

GETtheMANUALS.org

ALLOCATION OF INJECTION COMPUTER INPUTS AND OUTPUTS

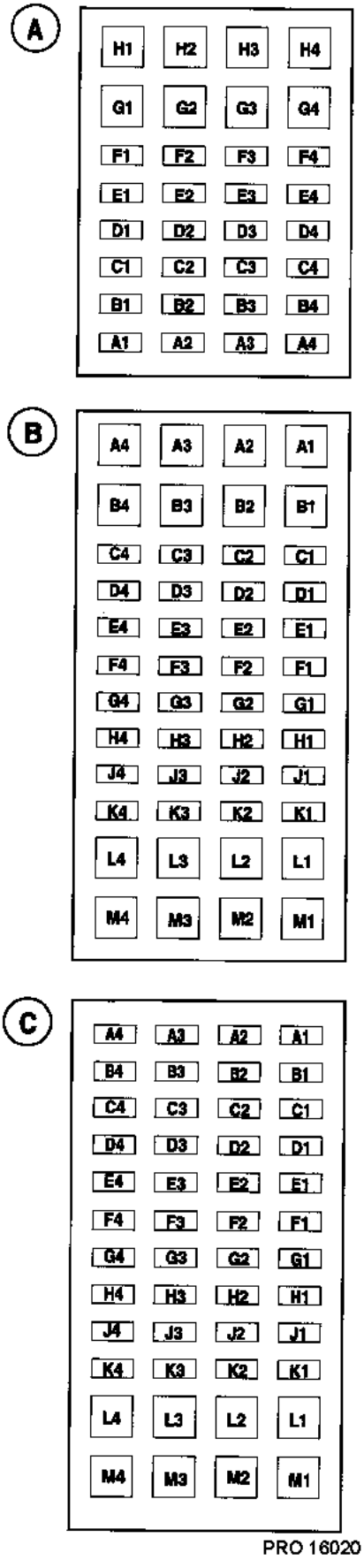

CONNECTOR A (grey)

A2	←	Cruise control/speed limiter sensor signal
A3	---	Pedal potentiometer earth (track 2)
A4	→←	UCH CAN L multiplex connection
B2	---	Cruise control/speed limiter supply
B3	---	Pedal potentiometer earth (track 1)
B4	→←	UCH CAN H multiplex connection
C1	←	Pedal potentiometer signal (track 1)
C3	→←	FAULT FINDING
D2	←	Cruise control or adaptive cruise control On / Off
E1	---	Pedal potentiometer supply (track 1)
E2	←	Clutch signal
F1	←	Pedal potentiometer signal (track 2)
F2	←	Speed limiter On / Off
F3	←	Brake signal (brake light switch open)
H2	---	Pedal potentiometer supply (track 2)

CONNECTOR B (brown)

A1	→←	Engine CAN H MULTIPLEX LINK (Automatic gearbox only)
B1	→←	Engine CAN L MULTIPLEX LINK (Automatic gearbox only)
B2	---	Exhaust gas recirculation valve position potentiometer earth
B3	←	Plugs fault finding input
C1	←	Turbocharging pressure sensor signal
C2	←	Exhaust gas recirculation valve position potentiometer signal
C3	→	Preheating relay control
D1	←	Diesel fuel pressure sensor signal
D3	←	Air temperature sensor signal
D4	→	Supply relay control (power latch)
E1	---	Coolant temperature sensor earth
E3	---	+ after ignition feed
F2	---	Exhaust gas recirculation valve position potentiometer supply
F3	→	Thermoplunger relay 2 control (two thermoplungers)
G1	---	Fuel temperature sensor earth
G2	---	Air flowmeter supply
G3	←	Engine speed sensor signal
H2	---	Diesel fuel pressure sensor supply
H3	←	Engine speed sensor signal
H4	←	Air flowmeter signal
J2	---	Turbocharging pressure sensor feed
J3	←	Fuel temperature signal
K3	←	Coolant temperature sensor signal
L1	→	Pressure regulator control
L2	→	Turbocharging pressure regulation solenoid valve control
L3	---	Power earth
L4	---	Power earth
M1	→	Exhaust gas recirculation solenoid valve control output
M2	---	+ After relay
M3	---	+ After relay
M4	---	Power earth

GETtheMANUALS.org

ALLOCATION OF INJECTION COMPUTER INPUTS AND OUTPUTS

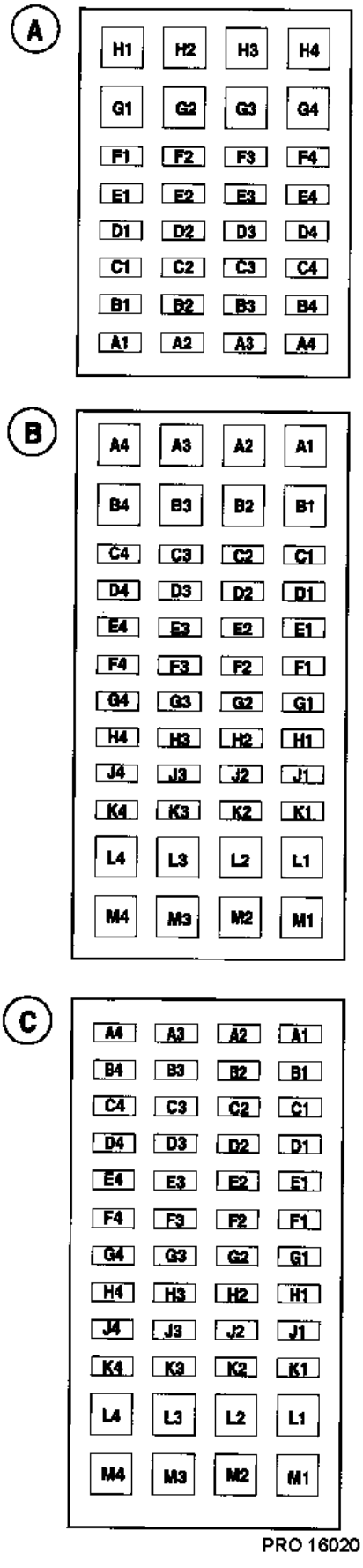

CONNECTOR C (black)

A1	→	Low pressure pump control
A2	→	Low speed fan assembly control relay
A3	---	Air flowmeter earth
A4	---	Turbocharging pressure sensor earth
B3	---	Diesel fuel pressure sensor earth
B4	→	High speed fan assembly control relay
C1	---	Camshaft sensor earth
E4	→	Thermoplunger relay 3 control (1 thermoplunger)
F4	→	Engine stop solenoid valve control
H4	→	Swirl flap solenoid valve control (swirl solenoid valve)
J4	→	Thermoplunger relay 1 control (1 thermoplunger)
K4	←	Camshaft position sensor signal
L1	→	Injector command 4
L2	---	Injector 3 feed
L3	---	Injector 2 feed
L4	→	Injector command 2
M1	→	Injector command 1
M2	→	Injector command 3
M3	---	Injector 1 feed
M4	---	Injector 4 feed

GETtheMANUALS.org

ALLOCATION OF COMPUTER TRACKS

CONNECTOR A

A1	---	Injection locking relay supply
A2	---	Injection locking relay supply
A3	---	Earth
A4	---	Earth
A5	---	Earth
A6	→←	Diagnostic socket
A7	---	Accelerator pedal potentiometer, track no. 1, + 5 V
A8	←	Accelerator pedal potentiometer, track no. 2, signal
A10	---	Cruise control - speed limiter control on the steering wheel
A11	---	Earth: inlet air temperature sensor, air flowmeter, accelerator pedal potentiometer track no. 2 and cruise control - speed limiter
A17	→	Thermoplunger 3 relay control
A18	→	Low-speed fan unit relay control
A19	→	Preheating unit control
A21	←	Stop switch signal
A23	←	Speed limiter On / Off switch
A24	---	+ 12 V
A26	---	Accelerator pedal potentiometer, track no. 2 and air flowmeter + 5 V supply
A27	←	Accelerator pedal potentiometer, track no. 1, signal
A29	←	Inlet air temperature sensor signal
A30	←	Air flowmeter signal
A31	---	Accelerator pedal potentiometer, track no. 1, earth
A36	→	Thermoplunger 1 relay control
A38	→	High-speed fan unit relay control
A39	→←	Diagnostic socket
A42	→	+ Starter control (UCH)
A44	→	Injector no. 5 control (power computer)
A45	→	Injector no. 3 control (power computer)
A46	→	Injector no. 1 control (power computer)
A48	→	CAN LOW multiplex connection
A49	←	Preheater unit diagnostic signal (plugs 1, 3 and 5)
A50	→←	Diagnostic line K
A56	→	Thermoplunger 2 relay control
A63	→	Injector no. 6 control (power computer)
A64	→	Injector no. 4 control (power computer)
A65	→	Injector no. 2 control (power computer)
A66	←	Power computer diagnostic return
A67	→←	CAN HIGH multiplex connection
A68	←	Preheater unit diagnostic signal (plugs 2, 4 and 6)
A76	→	Injection locking relay control
A81	←	Cruise control On / Off switch

GETtheMANUALS.org

CONNECTOR B

B82	←	Injector no. 2 resistance signal
B83	←	Injector no. 4 resistance signal
B84	←	Injector no. 6 resistance signal
B87	---	Wastegate position sensor earth, turbocharging pressure sensor, exhaust gas recirculation valve position sensor and rail pressure sensor
B90	←	Injector no. 1 resistance signal
B91	←	Injector no. 3 resistance signal
B92	←	Injector no. 5 resistance signal
B93	←	Turbocharging pressure sensor signal
B94	←	Exhaust gas recirculation valve position sensor signal
B95	---	Earth: coolant temperature sensor, diesel temperature sensor and injector resistors
B97	→	Turbocharging pressure regulation solenoid valve control
B98	---	Exhaust gas recirculation valve position sensor, turbocharging pressure sensor wastegate position sensor and arail pressure + 5 V supply
B99	←	Coolant temperature sensor signal
B100	←	Diesel fuel temperature sensor signal
B101	←	Wastegate position sensor signal
B102	---	+ cylinder makring sensor
B103	---	- cylinder marking sensor
B106	←	+ rail pressure sensor
B107	←	- rail pressure sensor
B110	---	Engine position and speed sensor earth
B111	←	Engine position and speed sensor signal
B114	---	Engine speed and position sensor and cylinder reference sensor shielding
B115	→	Exhaust gas recirculation valve solenoid valve control
B116	---	Pressure regulator supply
B120	→	Pressure regulator control 1
B121	→	Pressure regulator control 2

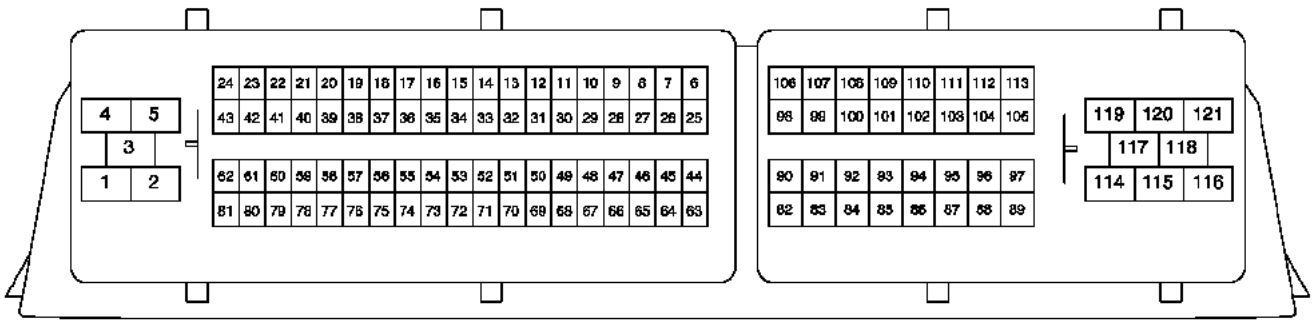

22820

GETtheMANUALS.org

CONNECTOR A

A1	---	+ Injection locking + 12 V after relay
A2	→←	Power computer diagnostic connection
A3	←	Injector no. 1 command
A4	←	Injector no. 2 command
A5	←	Injector no. 3 control
A6	←	Injector no. 4 commannd
A7	←	Injector no. 5 command
A8	←	Injector no. 6 command

CONNECTOR B

B1	---	Injector common supply
B2	→	Injector no. 6 command
B3	→	Injector no. 5 command
B4	→	Injector no. 4 command
B5	→	Injector no. 3 command
B6	→	Injector no. 2 command
B7	→	Injector no. 1 command
B8	---	Injector command unit earth

GETtheMANUALS.org

GENERAL INFORMATION

The preheating unit is an electronic relay consisting of a power circuit for each heater plug. It is controlled by track **B C3** of the injection computer.
It is located behind the wheel arch liner of the front left-hand wheel.

REMOVAL

Disconnect the battery.

Remove:
– the left hand front wheel,
– the front left-hand wheel arch liner.

Disconnect the pre/postheating unit connector (1).

Remove the pre-postheating unit.

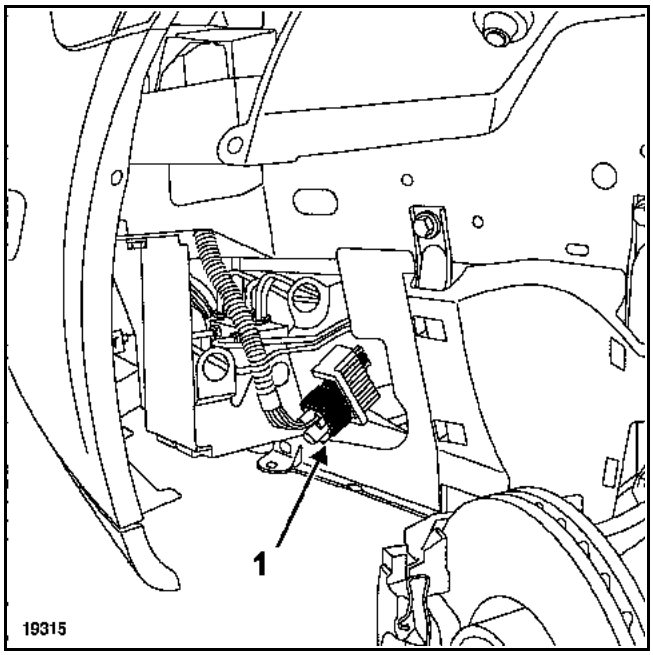

REFITTING

Proceed in the reverse order to removal.

ALLOCATION OF PREHEATING UNIT TRACKS

Track	Description
1	Spark plug 3 supply
2	Spark plug 4 supply
3	+ Battery feed
6	Power supply to spark plug no. 1
7	Power supply to spark plug no. 2
8	Control
9	Fault finding

GETtheMANUALS.org

GENERAL INFORMATION

The preheating unit consists of two electronic relays each comprising a power circuit for each heater plug.
It is controlled by track **A19** of the injection computer. Each relay controls a row of cylinders.
It is located behind the wheel arch liner of the front left-hand wheel.

REMOVAL

Disconnect the battery.

Remove:
– the left hand front wheel,
– the wheel arch liner.

Disconnect the two pre-postheating unit connectors (1).

Remove the pre-postheating unit.

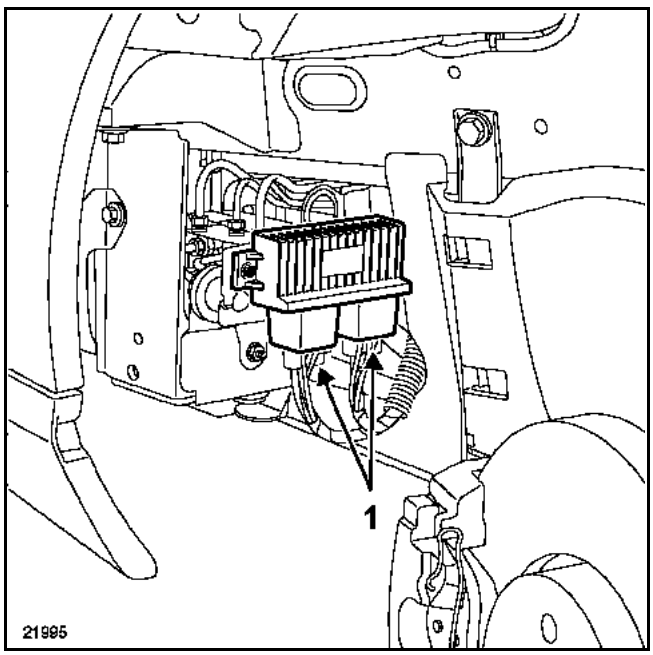

REFITTING

Proceed in the reverse order to removal.

ALLOCATION OF PRE/POSTHEATING UNIT TRACKS-

LH connector

Track	Description
1	Power supply to spark plug no. 1
2	Spark plug 3 supply
3	+ Battery 1
6	Spark plug 5 supply
8	Control
9	Fault finding1

RH connector

Track	Description
1	Power supply to spark plug no. 2
2	Spark plug 4 supply
3	+ Battery 2
6	Spark plug 6 supply
8	Control
9	Fault finding 2

GETtheMANUALS.org

The heater plug resistance is **0.6 Ω** (connector disconnected).

TIGHTENING TORQUE (in daNm)	
Pre-heater plugs	**1.5**

Spark plugs may be removed without having to open the high-pressure circuit.

REMOVAL

Unclip the spark plug electrical connector.

Clean the outside of the plug to avoid any impurities entering the cylinder.

Undo then remove the spark plugs using a long, radial **10 mm** socket or FACOM tool, part number **B10R10A** for example.

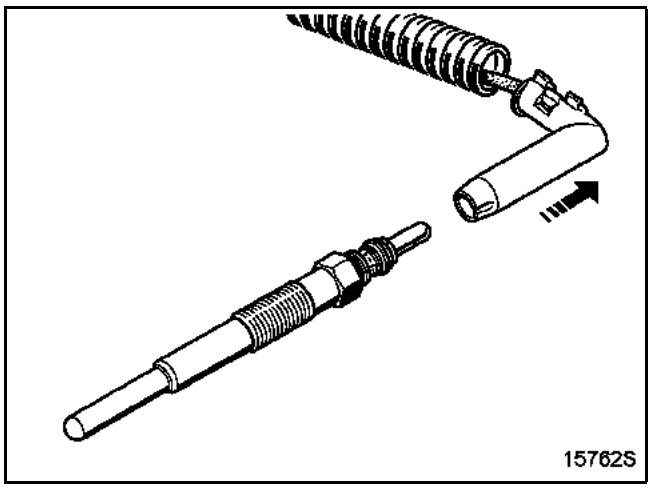

REFITTING

Proceed in the reverse order to removal.

Ensure that no contamination enters the cylinder during this operation.

GETtheMANUALS.org

The heater plug resistance is **0.6 ± 0.05 Ω**.

TIGHTENING TORQUE (in daNm)	
Pre-heater plugs	**1.8**

REMOVAL

Disconnect the battery.

Remove:
– the engine covers,
– the damper control solenoid valve mounting bolts.

Release the solenoid valve from the side.

Undo the nuts on the heater plugs without removing them.

Release the feed wires.

Clean the outside of the plug to avoid any dirt entering the cylinder.

Remove the spark plugs. To do this, use a heater plug spanner such as **Facom B10R12B**.

NOTE:
The high-pressure pipe bracket has to be undone and moved to remove the spark plug located on the front row, timing end.

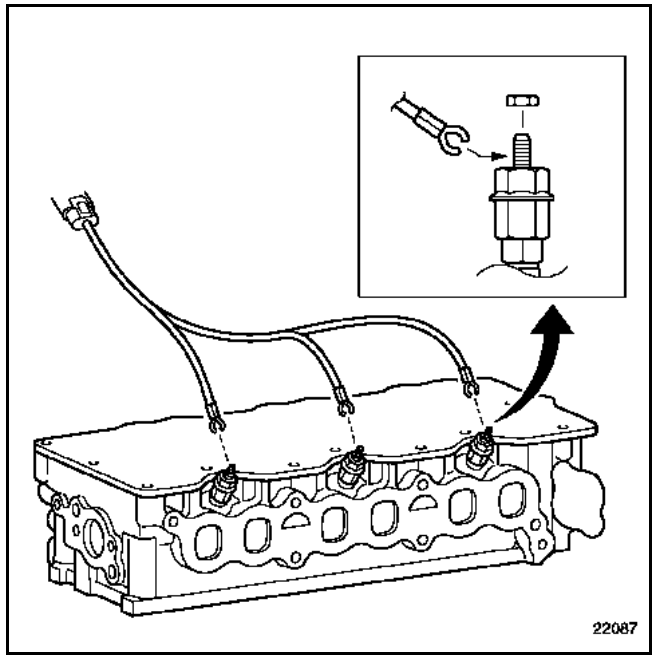

REFITTING

Proceed in the reverse order to removal.

Tighten the feed wire moutning nuts using a flexible extension, such as tool **Facom R216 150 mm** long.

GETtheMANUALS.org

The pre-postheating function is controlled by the injection computer.

PRE-POSTHEATING OPERATING PRINCIPLE

1) Switching on "preheating"

a) Variable preheating

The time period during which the warning light is lit and the spark plugs are supplied is dependent on the coolant temperature.

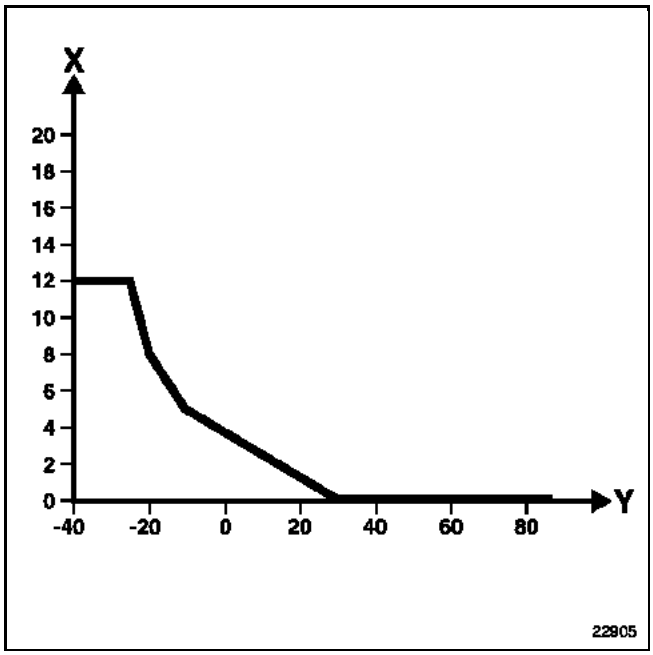

X: Time in seconds
Y: Coolant temperature in °**C**

In all cases, the glow plugs "on" tell-tale light cannot remain on for more than **12 seconds**.

b) Fixed preheating

After the warning light goes out the spark plugs continue to be supplied for a fixed period of **10 seconds**.

2) Starting the engine

The spark plugs continue to be supplied while the starter is being activated.

3) Engine running, "postheating"

During this phase, the spark plugs are supplied continuously according to the coolant temperature.

For idling speed without depressing the accelerator pedal.

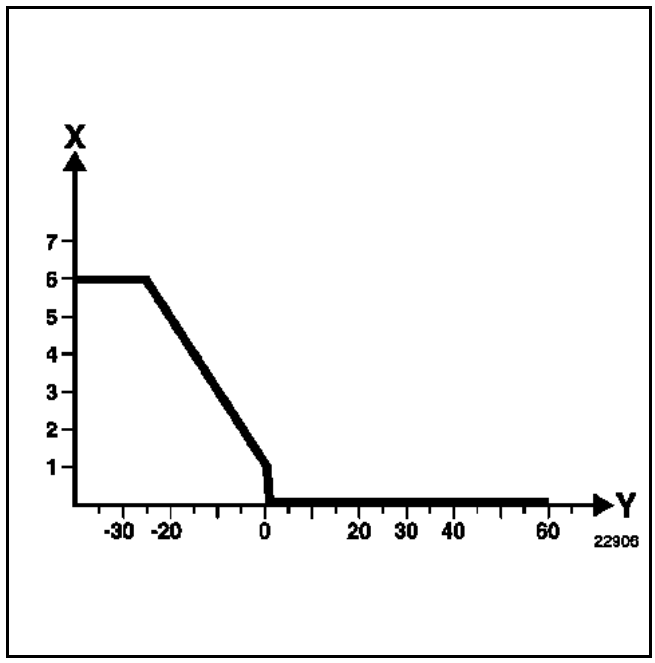

X: Time in seconds
Y: Coolant temperature in °**C**

GETtheMANUALS.org

The pre/posting heating function is controlled by the injection computer.

PRE-POSTHEATING OPERATING PRINCIPLE

1) Switching on the ignition Preheating

a) Variable preheating

The time period during which the warning light is lit and the heater plugs are supplied is dependent on the coolant temperature and atmospheric pressure.

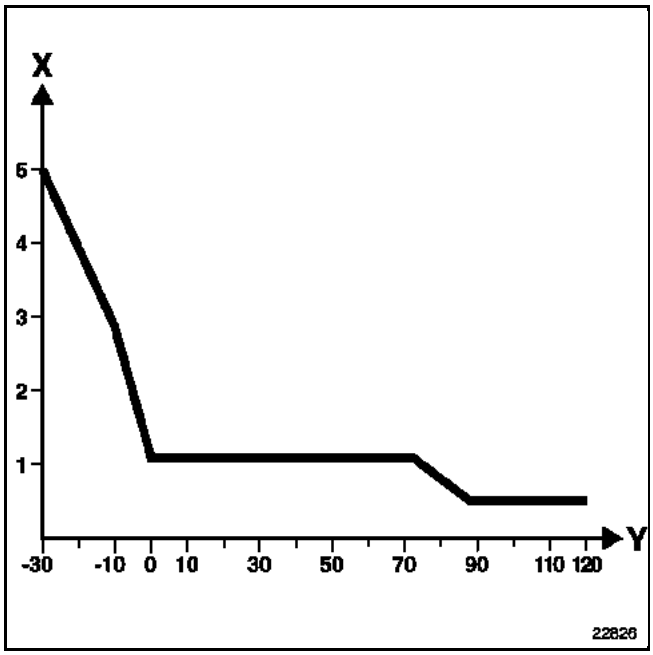

X: Time in seconds
Y: Coolant temperature in °**C**

In all cases, the glow plugs "on" tell-tale light cannot remain on for more than **10 seconds**.

b) Fixed preheating

After the warning light has gone out, the plugs are supplied for a further **10 seconds** regardless of the conditions if the "START" button is not pressed.
If the "START" button is pressed after this time period has elapsed, the UCH starts a new cycle of **1 second + 10 seconds**.

2) Starting the engine

The spark plugs continue to be supplied while the starter is being activated.

3) "Postheating" while the engine is running

During this phase, the spark plugs are supplied continuously according to the coolant temperature.

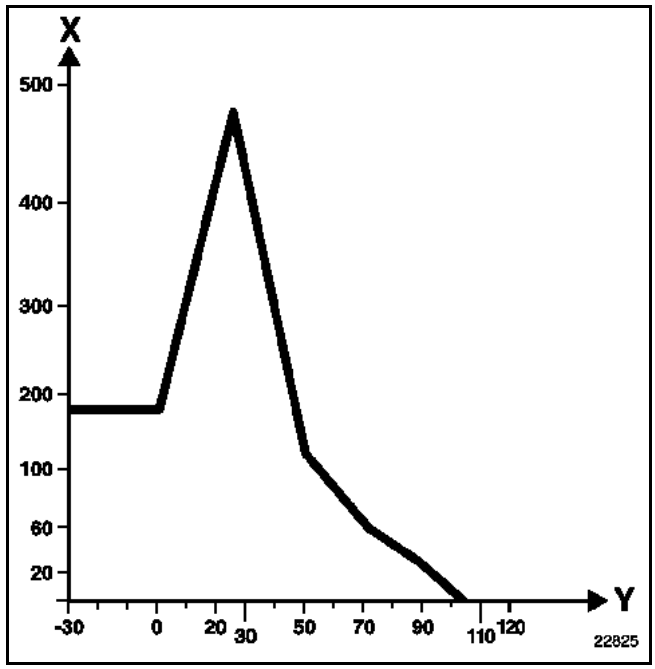

X: Time in seconds
Y: Coolant temperature in °**C**

For idle speed without pressing the accelerator pedal.

GETtheMANUALS.org

OPERATING DIAGRAM OF THE CIRCUIT

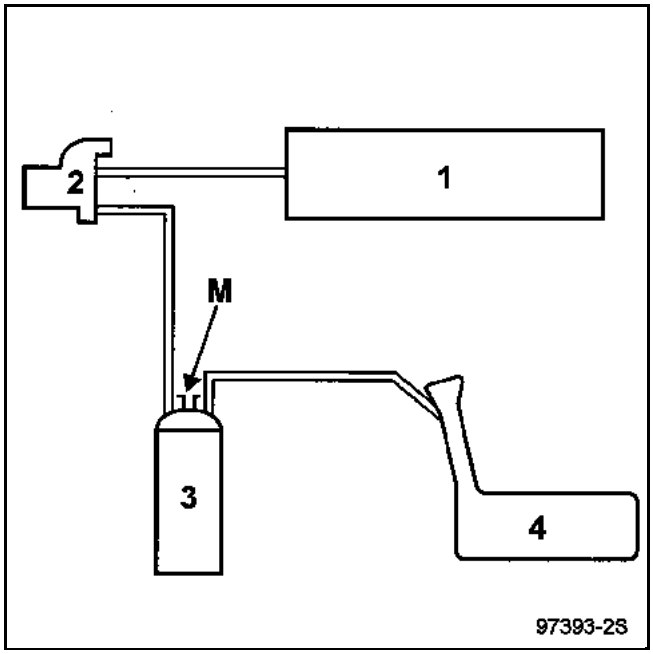

1 Inlet manifold
2 Absorber bleed solenoid valve
3 Absorber
4 Fuel tank
M Breather

Special notes on the F4R engine circuit

The circuit consists of a circuit A (turbocharger inlet) and a circuit B (throttle valve outlet) enabling it to rebreathe the fuel vapours regardless of the engine load.

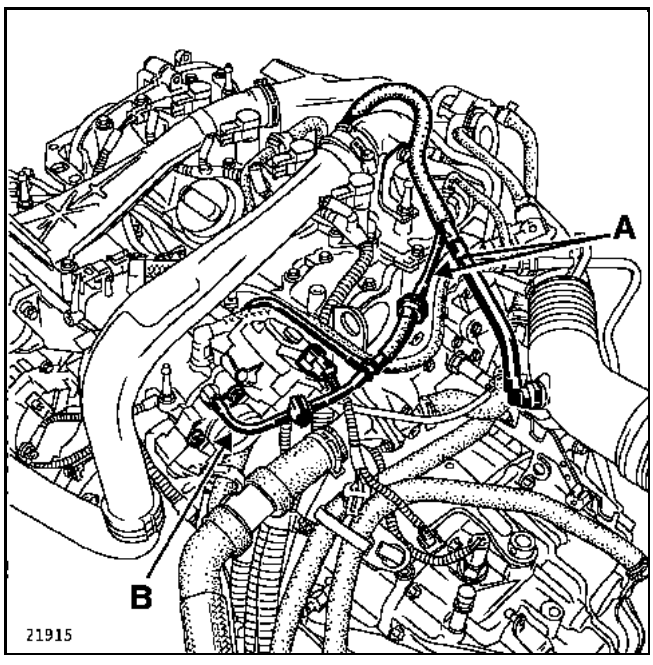

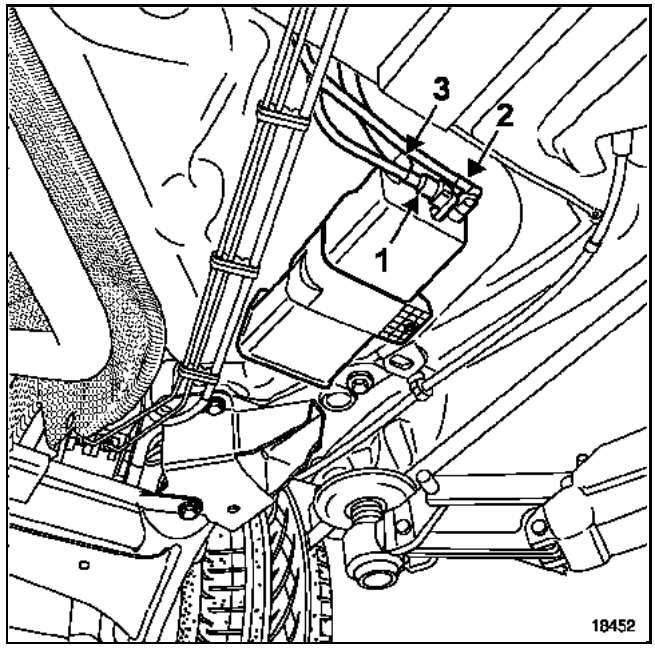

1 Rebreathing the fuel vapors coming from the tank
2 Rebreathing the fuel vapours going to the engine.
3 Tank breather

IMPORTANT: the breather must not be blocked during normal operation.

GETtheMANUALS.org

OPERATING PRINCIPLE

The air is vented from the tank through the fuel vapour absorber (canister).

The fuel vapours are trapped by the active charcoal contained in the absorber (canister) as they pass.

The fuel vapours trapped in the absorber are flushed out and burnt by the engine.

This is done by connecting the absorber and the inlet manifold through piping and a solenoid valve. This solenoid valve is located between the front right shock absorber cup and the power assisted steering on the **F4R Turbo engine** and on the inlet manifold next to the brake fluid reservoir on the **V4Y engine**.

The purpose of the solenoid valve is to open a passage of variable size (as a function of the OCR signal sent by the injection computer).

The variation in the passage made available to the fuel vapours in the solenoid valve is a result of the balance between the magnetic field created by the electrical supply to the coil and the return spring force attempting to close the solenoid valve.

CHECKING OPERATION OF FUEL VAPOUR REBREATHING

A system malfunction may result in an unstable idle or stalling of the engine.

Check the conformity of the circuit (see operating diagrams).

Check the condition of the pipes to the fuel tank.

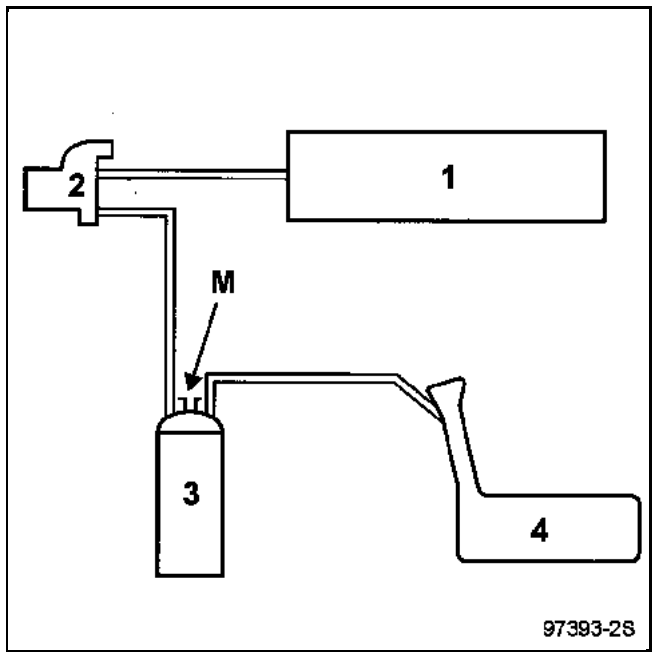

1 Inlet manifold
2 Absorber bleed solenoid valve
3 Absorber
4 Fuel tank
M Breather

GETtheMANUALS.org

BLEED CONDITIONS OF ABSORBER

On the **F4R** engine, the absorber bleed solenoid valve is controlled by **track C-E1** of the computer when:
– the engine is not at idle speed,
– the engine is in loop mode,
– the coolant temperature is greater than **55 ºC**,
– the air temperature is greater than **10 ºC**,

On the **V4Y**, engine the absorber bleed solenoid valve is controlled by **track B 89** of the computer when:
– the engine is not at idle speed,
– the engine is in loop mode,
– the coolant temperatue is above **40 °C**,

Canister bleed is not authorised during an On Board Diagnostic procedure.

The opening cyclic ratio of the canister bleed solenoid valve can be displayed on the diagnostic tool by consulting the canister bleed solenoid valve OCR signal parameter.

The solenoid valve is closed when the value is below **1.5%** (***F4R Engine***) and when the value is equal to **0%** (***V4Y Engine***).

REMOVING THE ABSORBER

The absorber (1) is located on the left section of the reservoir.

Disconnect:
– the pipe (2) bringing the fuel vapour from the tank,
– the pipe (3) taking the fuel vapours to the solenoid valve,
– the breather pipe (4).

Remove:
– the absorber mounting bolts (5),
– the absorber.

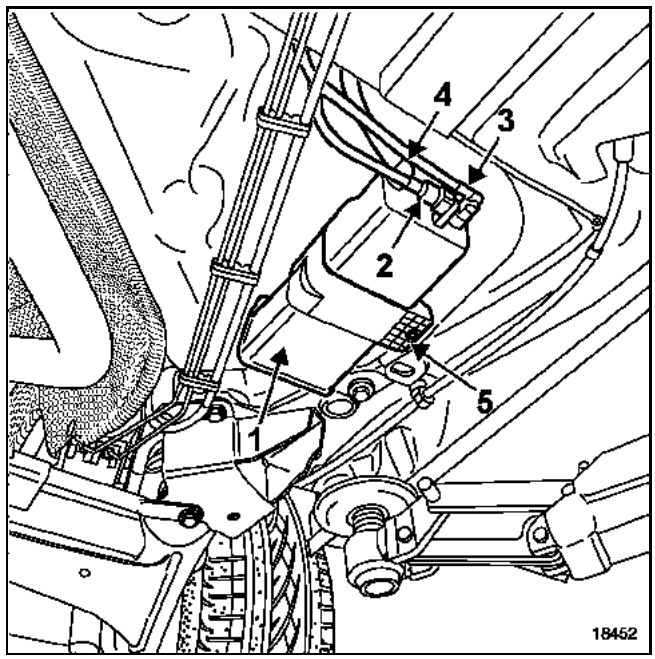

REFITTING

Refitting is the reverse of removal.

GETtheMANUALS.org

Check:
– at idle speed,
– by blocking, on the absorber, the circuit from the reservoir,
– connecting a pressure gauge (**Mot. 1311-01**) so that there is no vacuum pressure on the absorber breather outlet (M), (in the same way, the control value read by the diagnostic tool in parameter: **OCR canister bleed** stays minimal **X ≤ (1.5%) (*F4R engine*), X = 0% (*V4Y engine*).**

Is there a vacuum?

YES: with the ignition off, use a vacuum pump to apply a vacuum pressure of **500 mbar** to the solenoid valve output. The vacuum pressure should not vary by more than **10 mbar** for **30 seconds.**

Does the pressure vary?

YES: replace the solenoid valve as it is faulty.

NO: there is an electrical problem, check the circuit.

NO: in bleed conditions (see bleed conditions) an increase in the vacuum should be detected (at the same time, the value of the parameter should increase on the diagnostic tool).

CHECKING THE RESERVOIR/ABSORBER CONNECTION

It is possible to check this connection by connecting a vacuum pump to the pipe going to the absorber.

GETtheMANUALS.org

PRESENTATION OF CIRCUIT COMPONENTS

A The turbocharger inlet circuit is used for medium and heavy loads. The vapours are rebreathed by the vacuum in the inlet manifold.

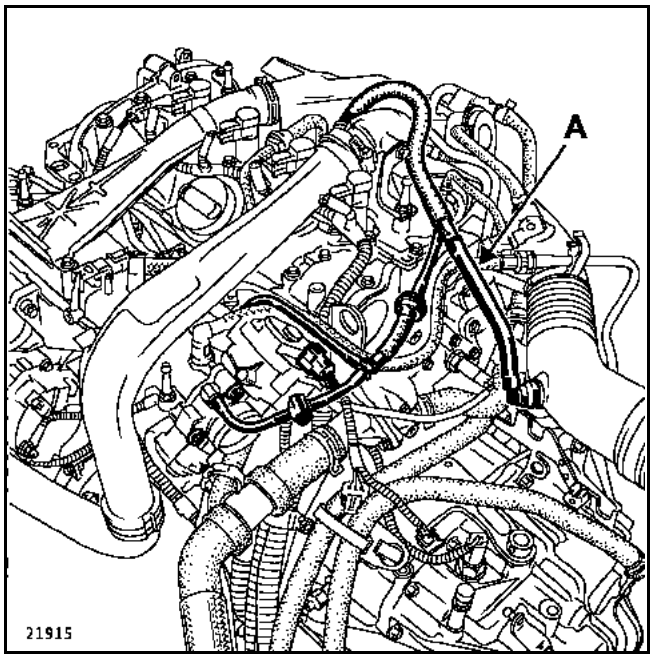

B The throttle valve outlet circuit is used for small loads. The vapours are rebreathed by the vacuum between the throttle and the engine.

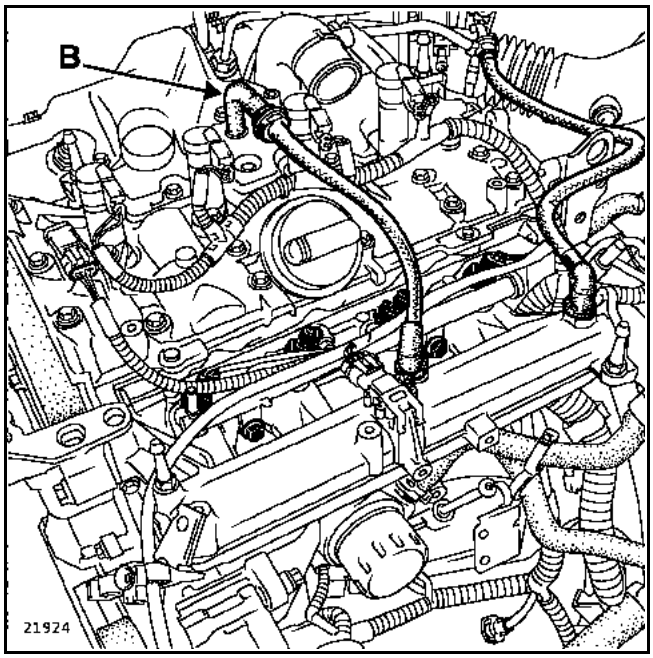

Oil vapour outlet holes:

A Upstream circuit oil vapour outlet hole.

B Downstream circuit oil vapour outlet hole.

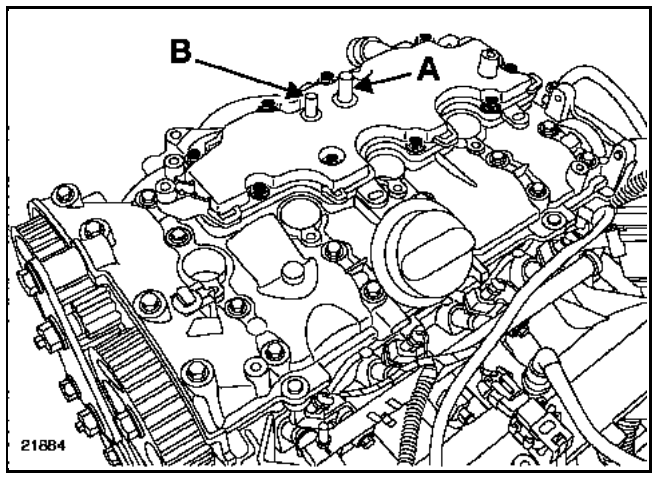

Oil vapour recovery plate located on the rocker cover.

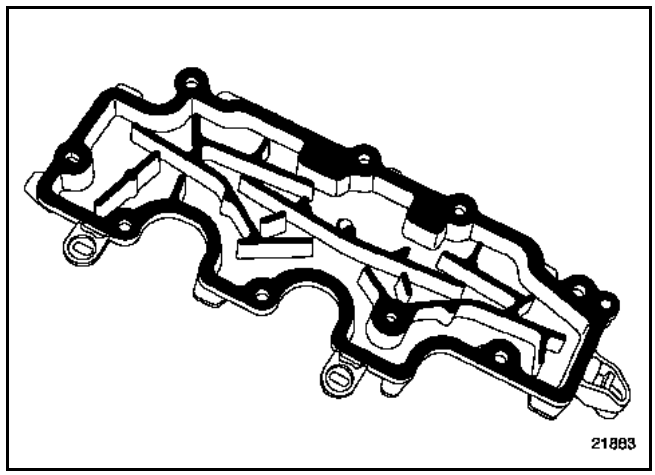

Refer to section **11A Top and front of engine for instructions on removal.**

GETtheMANUALS.org

CIRCUIT DIAGRAM

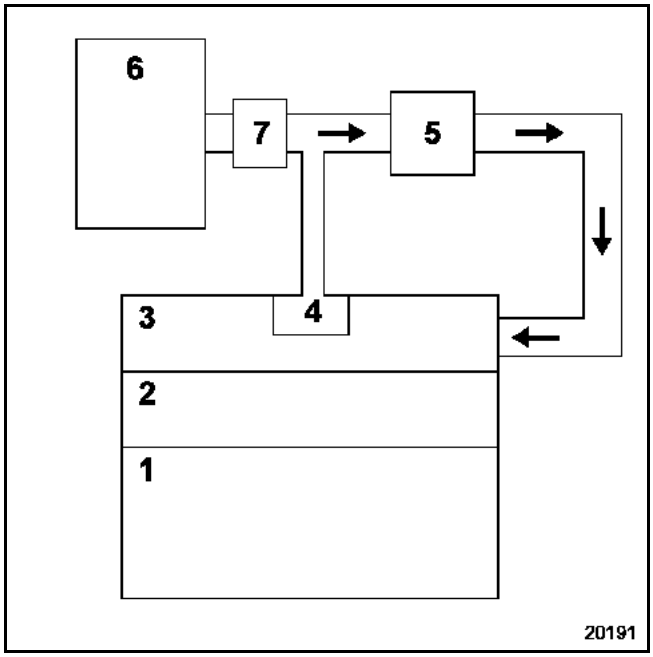

1 Engine
2 Cylinder head
3 Rocker cover/inlet manifold
4 Oil decanter (incorporated into the rocker cover)
5 Turbocharger
6 Air filter
7 Air flowmeter

CHECKING

To ensure the correct operation of the anti-pollution system, the oil vapour rebreathing circuit must be kept clean and in good condition.

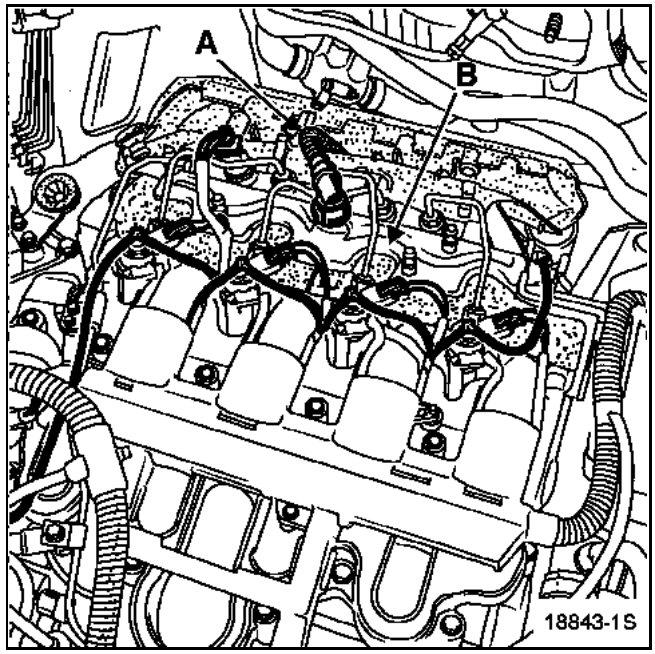

A Oil vapour rebreathing pipe linked to the inlet pipes.

B Oil decanter incorporated into the cylinder head cover/inlet manifold.

GETtheMANUALS.org

CIRCUIT DIAGRAM

A On small loads, the cool air located in the gas throttle inlet, clears the oil vapours located in the crankcase. The oil vapours are sucked up in small quantities by the vacuum in the gas throttle outlet, via a variable valve (C), then rebreathed into the cylinders.

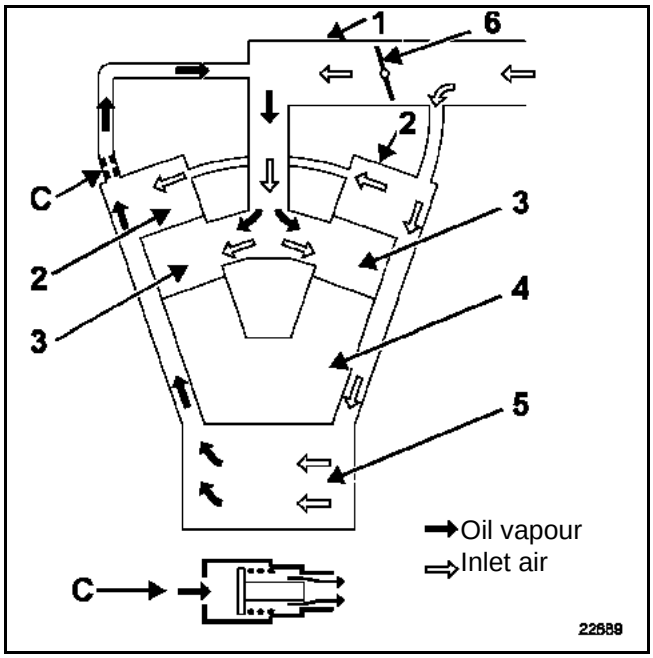

B On medium and heavy loads, the oil vapours are sucked towards the cylinders. The variable valve (C) allows a large quantity of oil vapour to pass through.

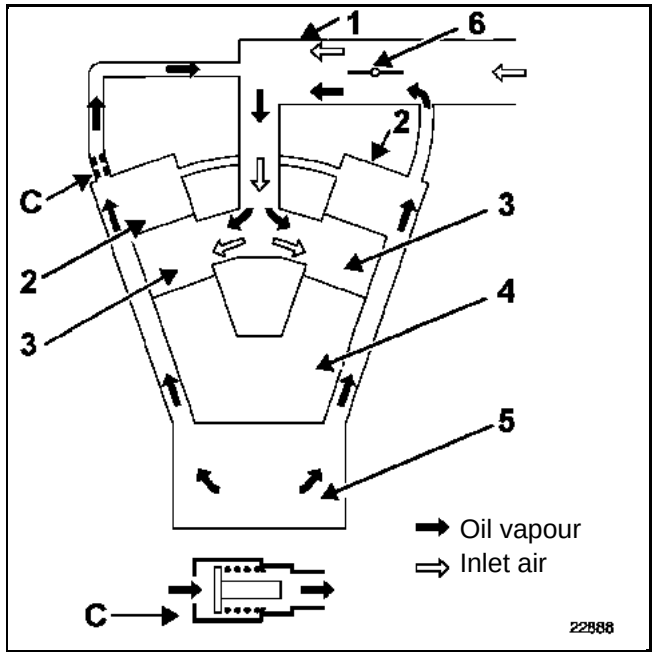

1 Inlet manifold
2 Rocker cover
3 Cylinder head
4 Engine block
5 Crankcase
6 Gas throttle

CHECKING

To ensure the correct operation of the anti-pollution system, the oil vapour rebreathing circuit must be kept clean and in good condition.

NOTE: the variable valve is located on the rear side of rock cover.In its resting position, it should be closed.

GETtheMANUALS.org

PRESENTATION

The crankcase gas returns to the inlet passing through a diaphragm valve.

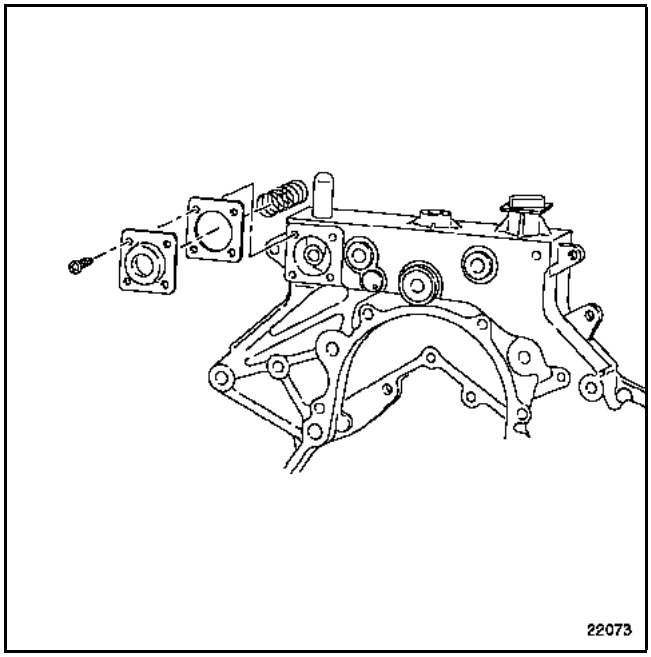

A When there is a low load, the vacuum pressure in the air inlet duct is below the spring set point. The oil vapours are rebreathed in large quantities by the vacuum in the air inlet tract.

B With medium and heavy loads, the vacuum pressure in the air inlet tract draws in the diaphragm valve, the rebreathing tract is blocked. The oil vapours are not sucked in.

GETtheMANUALS.org

CHECKING

To ensure the correct operation of the anti-pollution system, the oil vapour rebreathing circuit must be kept clean and in good condition.

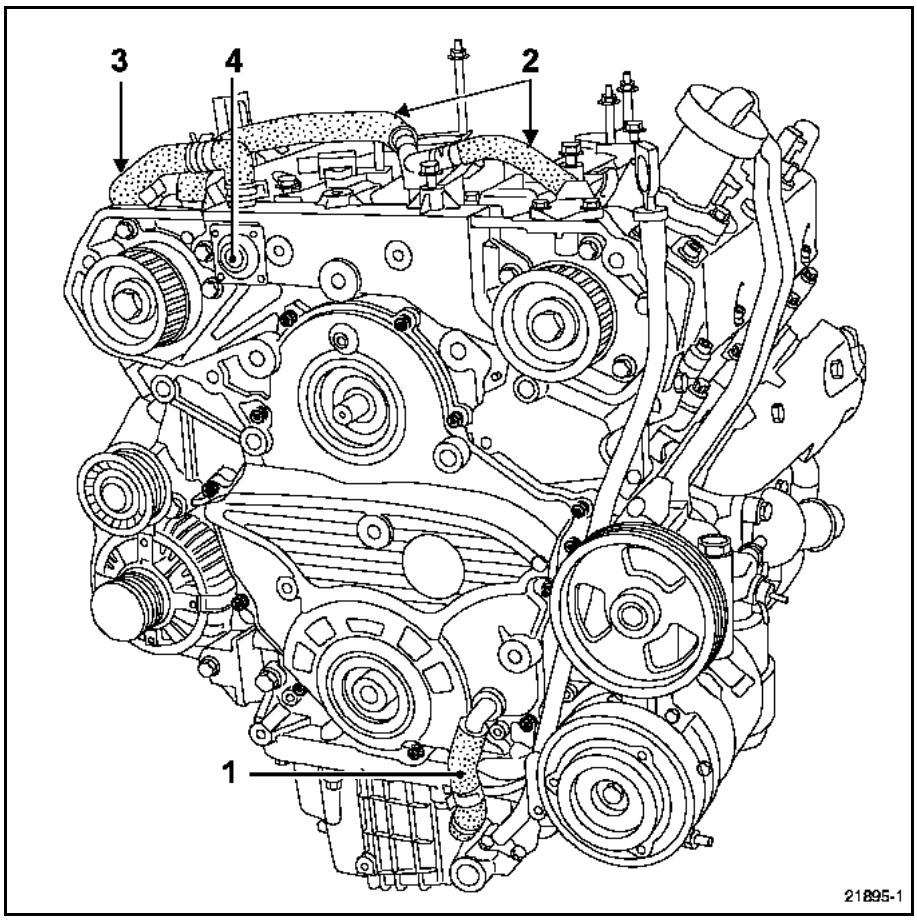

1 Crankshaft oil vapour rebreathing pipe
2 Rocker cover oil vapour rebreathing pipes
3 Oil vapour rebreathing pipe towards the intake pipes
4 Diaphragm valve

GETtheMANUALS.org

CIRCUIT DIAGRAM

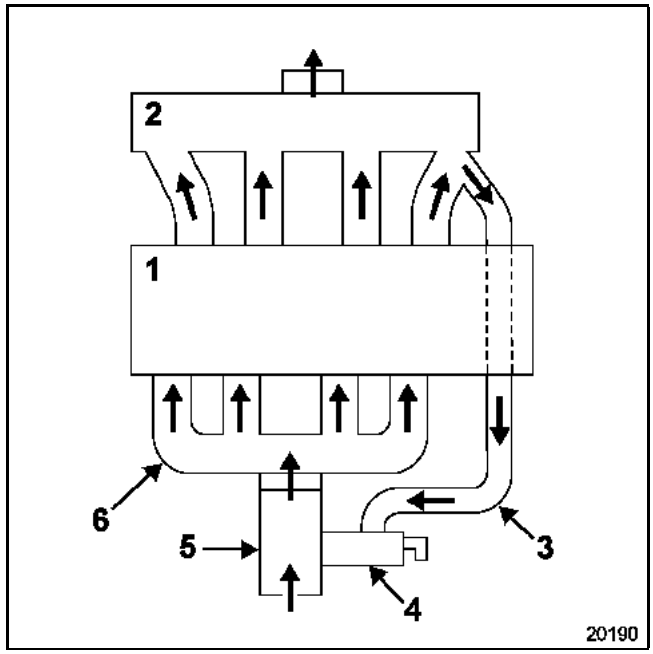

1 Cylinder head
2 Exhaust manifold
3 EGR pipe
4 EGR solenoid valve
5 Damper unit
6 Inlet manifold/rocker cover

REMOVAL

To remove the EGR valve, the air vent housing must be removed.See section **12A Fuel mixture Air vent housing.**

GETtheMANUALS.org

OPERATING PRINCIPLE

The valve is controlled by Opening Cyclic Ratio (OCR) signal issued by the injection computer. The **OCR** signal modulates the opening of the valve and consequently the quantity of exhaust gas directed back to the inlet manifold.

The computer continuously carries out a test to detect the position of the **EGR** valve flap.

OPERATING CONDITIONS

The parameters which determine the activation of the **EGR** solenoid valve are as follows:
– coolant temperature,
– air temperature,
– atmospheric pressure,
– accelerator pedal position,
– engine speed,
– air flow,
– injection flow rate,
– turbocharging pressure.

The EGR function is cut if:
– the battery voltage is below **8.9 volts**,
– The engine speed is above **900 rpm** when pedal is released (low pedal value),
– graph (engine speed/load) exceeds a given threshold,
– the vehicle speed is below **3 mph (5 km/h)**, and the engine speed is below **900 rpm** for **40 seconds**.

The EGR valve is not controlled after engine start-up by a graph of the coolant temperature.

X Time
Y Coolant temperature (°C)

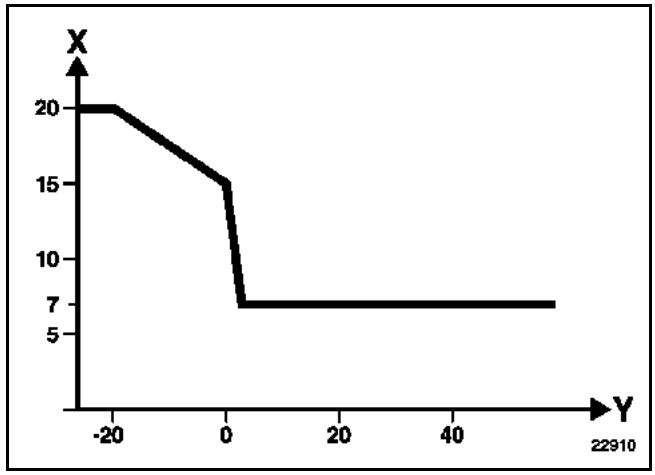

In the event of a fault, the EGR is cut:
– the coolant temperature sensor,
– the air temperature sensor,
– the atmospheric pressure sensor.

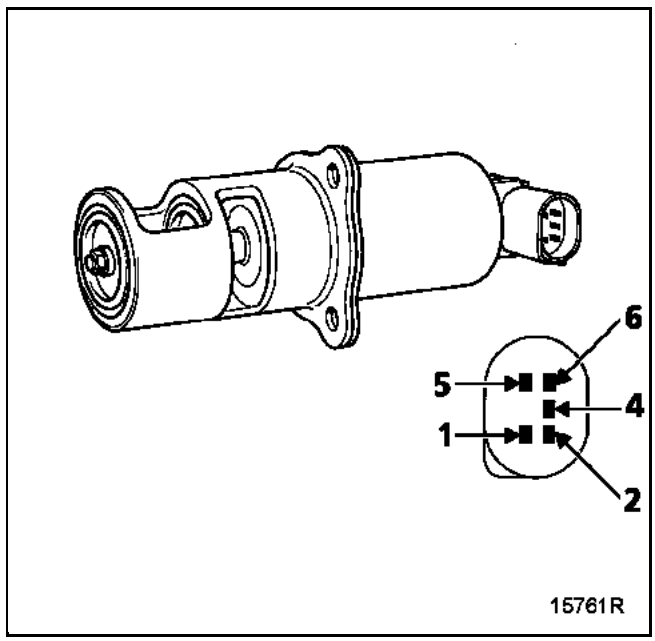

1 Solenoid feed
2 Sensor feed
4 Sensor earth
5 Solenoid earth
6 Sensor output

GETtheMANUALS.org

CIRCUIT DIAGRAM

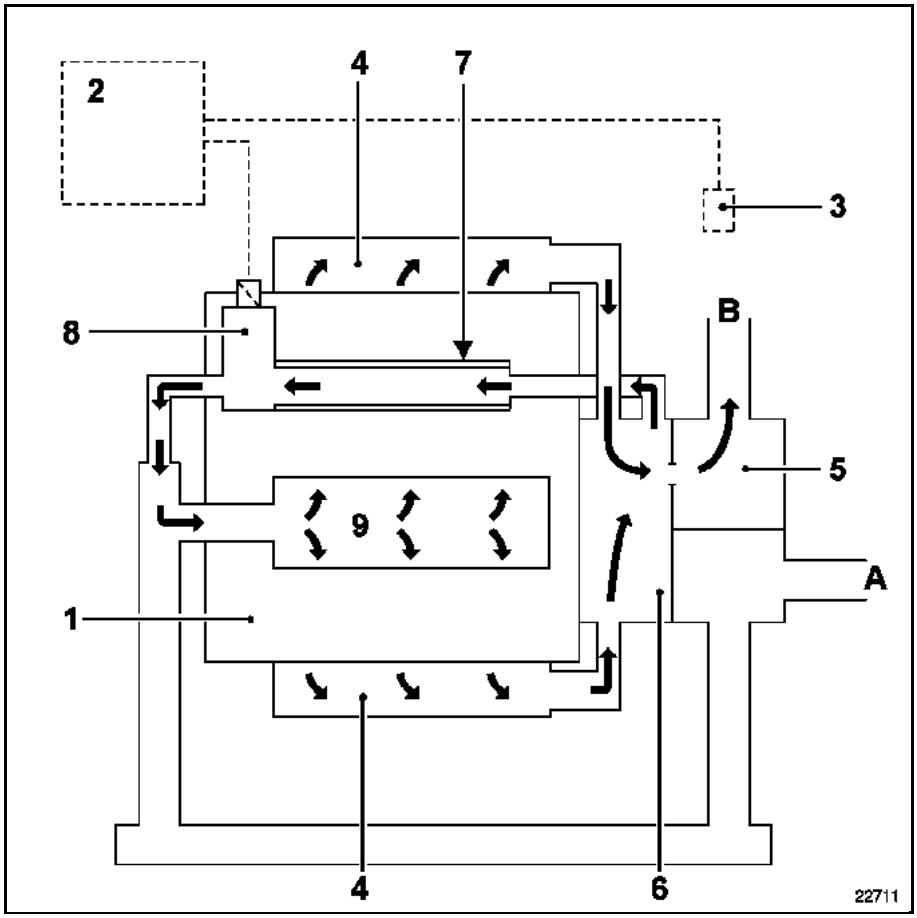

1 Engine
2 Injection computer
3 Coolant temperature sensor
4 Exhaust manifold
5 Turbocharger
6 Turbocharger manifold
7 EGR intercooler
8 EGR valve
9 Inlet manifold
A Inlet air
B Exhaust

REMOVING THE EGR SENSOR/INTERCOOLER ASSEMBLY

See section **12A EGR valve intercooler**.

PURPOSE OF THE EGR SYSTEM

Exhaust gas recirculation is used to reduce the nitrogen oxide (NOx) content of the exhaust gases.

The injection computer allows gas to pass by controlling a solenoid valve.

GETtheMANUALS.org

OPERATING PRINCIPLE

The valve is controlled by an Opening Cyclic Ratio (**OCR**) signal sent by the injection computer. The OCR signal modulates the opening of the valve and consequently the quantity of exhaust gas directed back to the inlet manifold.

The computer continuously carries out a test to detect the position of the EGR valve flap.

In order to reduce the percentage of polluting emissions, the P9X engine uses **a recirculated exhaust gas cooler**. The gases emitted in the cylinder by the EGR valve cross an intercooler cooled by the coolant fluid. This results in the combustion temperature lowering. In this way, NOx emissions are reduced.

TRACK ALLOCATION

Position sensor (1)
1 Sensor signal
2 Sensor earth
3 Sensor feed + **5 volts**

EGR solenoid valve (2)
1 EGR solenoid control
2 EGR solenoid valve feed **+ 12 volts**

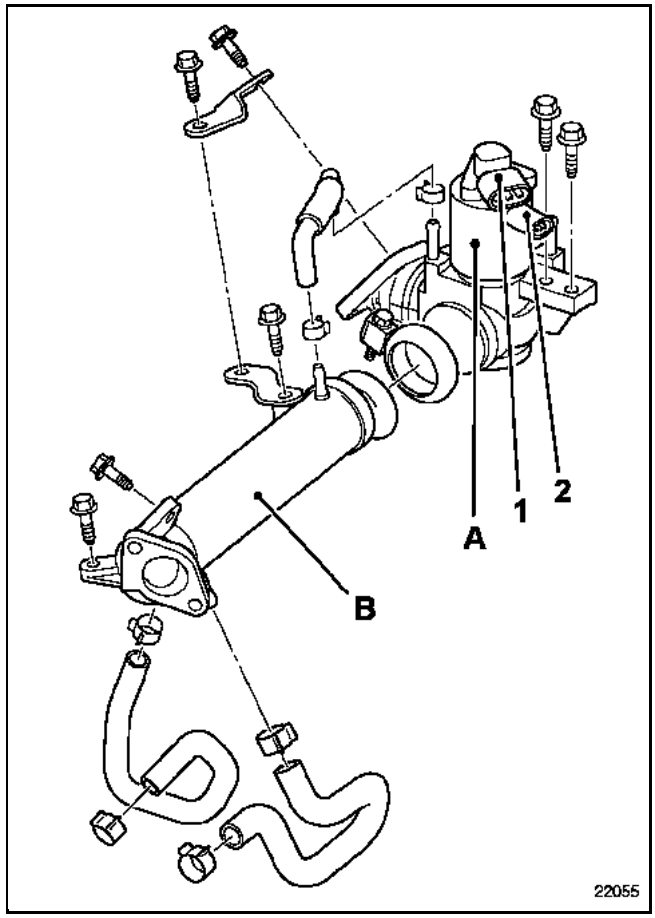

A EGR valve
B Intercooler

GETtheMANUALS.org

OPERATING CONDITIONS

The parameters which determine the activation of the EGR solenoid valve are as follows:
– coolant temperature,
– atmospheric pressure,
– accelerator pedal position,
– the engine speed.

THE EGR FUNCTION IS CUT:
– during the starting phase,
– during the pre/post heating stage,
– if the engine speed is **below 450 rpm**,
– if the coolant temperature is **above - 120°C**,
– if the coolant temperature is **below - 0°C**,
– if the atmospheric pressure is **below 884 mbar**,
– during acceleration: pressure difference on the pedal **above 5.5 %** and quantity of diesel injected **above 10 mm^3/stroke**,
– after the ignition is switched off (computer self supply period).

IN THE EVENT OF A FAULT WITH:
– the air flowmeter,
– the turbocharging pressure sensor,
– the atmospheric pressure sensor,
– the air or diesel temperature sensor,
– the EGR valve,
– the EGR solenoid valve position sensor,
– the wastegate position sensor,
– the turbocharging pressure adjustment solenoid valve,

The EGR valve operates in defect mode or is not supplied.

GETtheMANUALS.org

OPERATION - FAULT FINDING

These vehicles are equipped with alternators with internal ventilation and integral regulator. There is also a warning light on the instrument panel which has the following functions:
– the warning light comes on when the ignition is switched on,
– the light goes out when the engine starts,
– if the warning light illuminates while the engine is running it shows there is a "**charging**" fault.

FAULT FINDING

The warning light does not come on when the ignition is switched on.

Check:
– that all electrical connections are good;
– whether the bulb is blown (to find out, connect the circuit to earth; the bulb should light up).

The warning light comes on when the engine is running.

This indicates a charging fault which could be caused by:
– broken alternator drive belt or charging circuit,
– damage inside the alternator (rotor, stator, diodes or brushes),
– regulator fault,
– overvoltage.

The customer complains of a charging fault but the warning light is operating correctly.

If the regulated voltage is less than **13.5 V**, check the alternator. The fault could be caused by:
– damaged diode,
– broken wire,
– charred or worn tracks.

Checking the voltage

Connect a voltmeter to the battery terminals and read the battery voltage.

Start the engine and increase the engine speed until the voltmeter needle registers a stable regulated voltage.

This voltage should be between **13.5 V** and **14.8 V.**

Switch on as many power consumers as possible; the regulated voltage should be between **13.5 V** and **14.8 V.**

IMPORTANT: the battery and regulator must be disconnected when arc welding work is carried out on the vehicle.

GETtheMANUALS.org

IDENTIFICATION

ENGINE	ALTERNATOR	CURRENT
F4R Turbo	Valeo SG 12 B017 Valeo SG 12 B0030 Valeo SG 12 B068	125 A
G9T	Valeo SG 12 B0030 Valeo SG 12 B068	125 A
P9X	Denso	150 A
V4Y	Hitachi LR 1150-702	150 A

CHECKING

After **15 minutes** heating at **13.5 V**.

Engine speed (rpm)	125 amps	150 amps
800	**64 A**	-
2000	**81 A**	**102 A**
4000	**118 A**	**145 A**
6000	**123 A**	**151 A**

GETtheMANUALS.org

FAULT FINDING

Diagnostic tools make it possible to check the alternator by measuring the voltage and the output current, with or without electrical consumers.

NOTE: the workstation's ampermetric clamp is of the inductive type (measurement range:**0** to **1,000 A**). It is fitted without disconnecting the battery, which allows **computer memories and adjustment programs to be saved.**

Fit the ampermetric clamp directly to the alternator output, with the arrow on the clamp pointing towards the alternator (the station will detect an incorrect position).

Measurement is carried out in three stages:
– measurement of the battery voltage, ignition off,
– measurement of the regulated voltage and the output current, without consumers,
– measurement of the regulated voltage and the output current with maximum consumers.

When the test is complete, the values displayed are followed, where appropriate, by diagnostic messages:
– battery voltage, no load < **12.3 V** = battery discharged.

Without consumers:
– regulated voltage > **14.8 V** ⇒ regulator faulty,
– (regulated voltage, no load < **13.2 V**) or (charging current < **2A**) ⇒ charging fault.

With consumers:
– regulated voltage > **14.8 V** ⇒ regulator faulty,
– regulated voltage < **12.7 V** ⇒ it is necessary to check the alternator output against its specification:

Engine / Current (amps)	F4R turbo	G9T	P9X	V4Y
minimum voltage needed for alternator with all consumers switched on (3000 rpm.)	80 A	80 A	80 A	80 A

GETtheMANUALS.org

Fault finding (continued)

If the measured output is too low, check:
– the condition of the alternator (brushes,etc),
– battery connections,
– engine earth strap,
– the alternator is functioning correctly,
– belt tension.

If the measured output is correct but the regulated voltage is too low, the alternator is not faulty.

The cause of the problem can be attributed to one of the following sources:
– the vehicle has too many electrical power consumers,
– the battery is discharged.

GETtheMANUALS.org

REMOVAL

Put the car on a two-post lift.

Disconnect the battery and all electrical connections on the alternator.

Remove:
– the engine cover plates,
– the engine undertray,
– the power steering mounting and reservoir,
– the accessories belt (see information on the accessories belt tension in section **07A**).
– the pulley,
– the alternator mounting bolts, then remove it using a screwdriver.

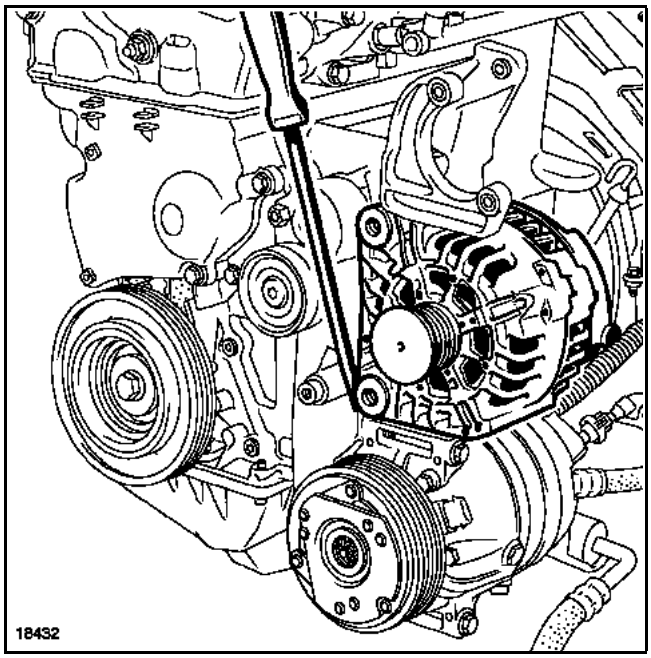

GETtheMANUALS.org

REFITTING

To install the alternator, compress the rings (A) using pliers or a vice.

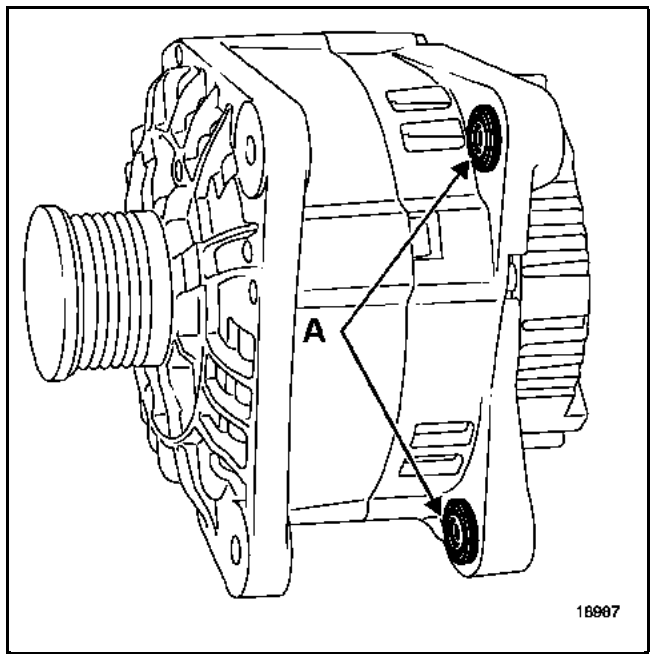

For information the tensioning procedure, refer to accessory belt tension in section **07A**.

GETtheMANUALS.org

REMOVAL

Put the car on a two-post lift.

Disconnect the battery.

Remove:
– the engine cover plates,
– the engine undertray,
– the front right wheel and the wheel-arch liner,
– the accessories belt.

For accessory belt removal refer to the information on accessory belt tension in section 07A.

Remove:
– the pulley,
– the alternator electrical connectors,
– the aluminium side members' stiffener,
– the air conditioning compressor connectors (1),
– the air conditioning compressor attachments(2).

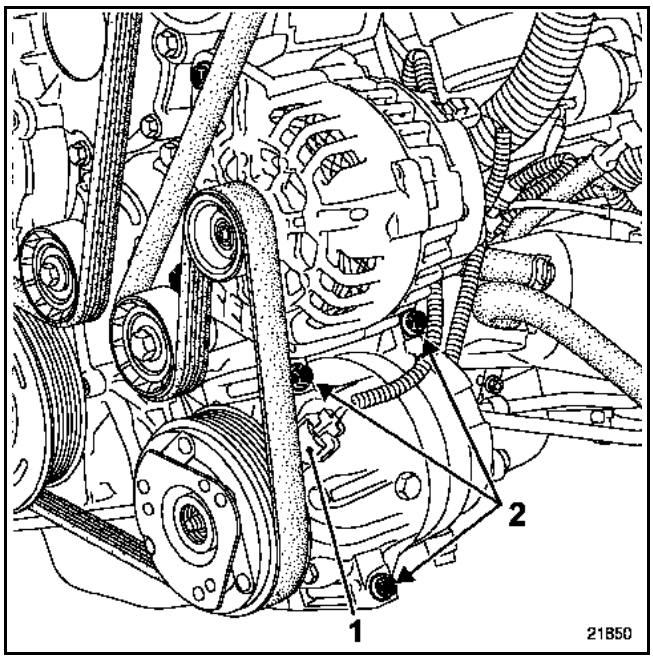

NOTE: To avoid deforming the pipes, make sure you attach the air conditioning compressor to the side members.

To detach the mounting remove the diesel filter and the power steering reservoir.

Remove the alternator attachments and then the alternator.

REFITTING

Refit in reverse order to removal.

To fit the alternator, compress the rings (A) using pliers or a vice.

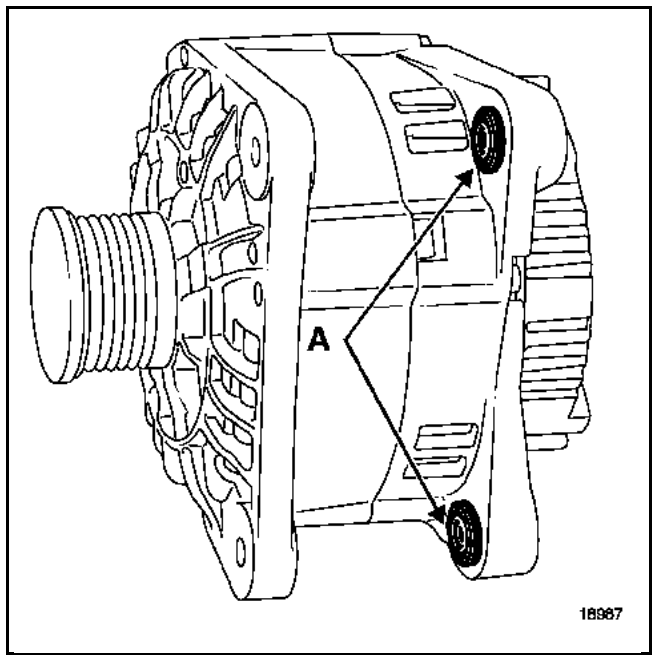

For information on the tensioning procedure refer to the information on accessory belt tension in section **07A**.

GETtheMANUALS.org

REMOVAL

Put the car on a two-post lift.

Disconnect the battery.

Remove:
– the engine undertray,
– the front right wheel,
– the mudguard,
– the accessories belt.

For accessory belt removal refer to the information on accessory belt tension in section 07A.

Remove the heat shield.

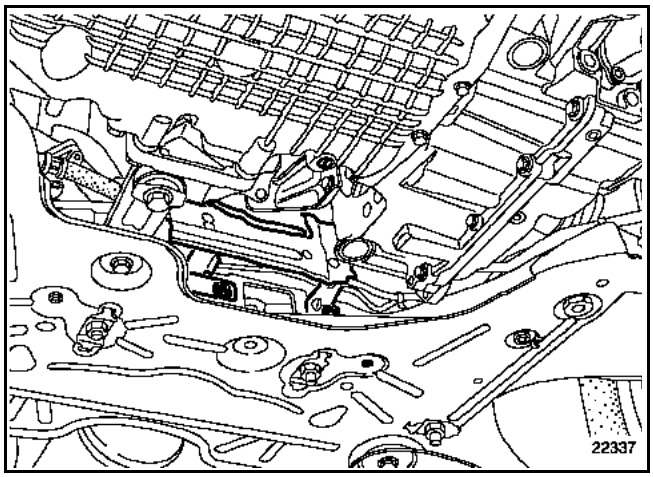

It is not necessary to completely remove the heat shield retaining bolt because the holes are open.

Remove:
– the torque reaction arm,
– the alternator connectors in (A),
– the alternator attachments in (B),
– the alternator.

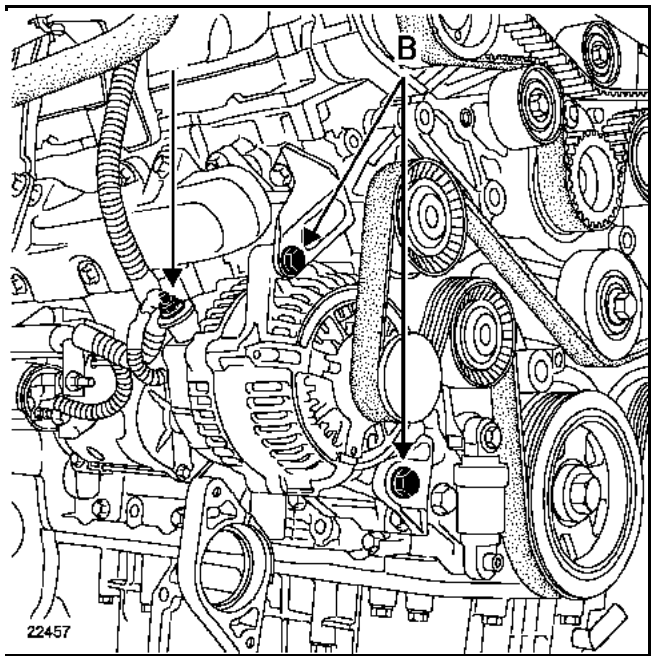

REFITTING

Proceed in the reverse order to removal.

To tighten torque on the torque reaction link refer to the information on suspended engine mounting in section **19A**.

For the tensioning procedure refer to the accessory belt tension in section **07A**.

GETtheMANUALS.org

REMOVAL

Put the car on a two-post lift.

Remove the engine covers.

Disconnect the battery.

Remove:
– the engine undertray,
– the front right wheel,
– the right-hand front wheel arch liner and side protector,
– the resonator,
– engine fan connectors,
– the engine fan,
– the accessory belt by unscrewing the pulley nut (A) and the tensioner (B),

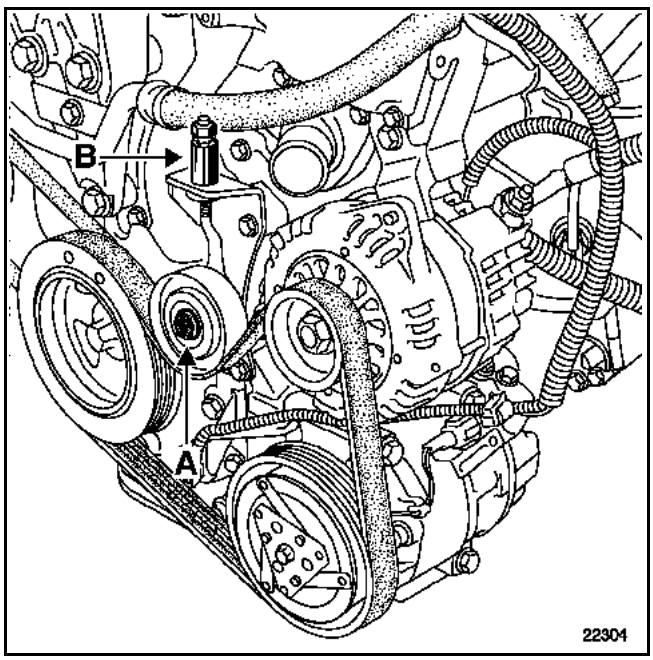

– the pulley,
– the alternator attachments and connections.

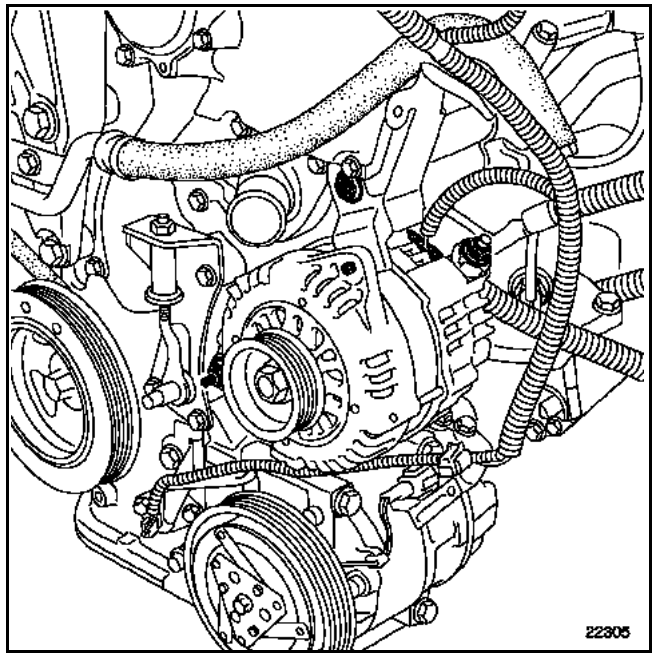

REFITTING

Proceed in the reverse order to removal.

For the tensioning procedure refer to the information on accessory belt tension in section **07A**.

GETtheMANUALS.org

IDENTIFICATION

ENGINE	STARTER
F4Rt	Bosch000106017
G9T	Valeo D7R53
P9X	Hitachi S14-41
V4Y	Hitachi S144877A

GETtheMANUALS.org

REMOVAL

Put the car on a two-post lift.

Disconnect the battery.

Remove:
– the engine cover,
– the engine undertray,
– the catalytic convertor rear strut,
– the oxygen sensor,
– the thermal shield mounting at (A).

Disconnect the starter motor feed.

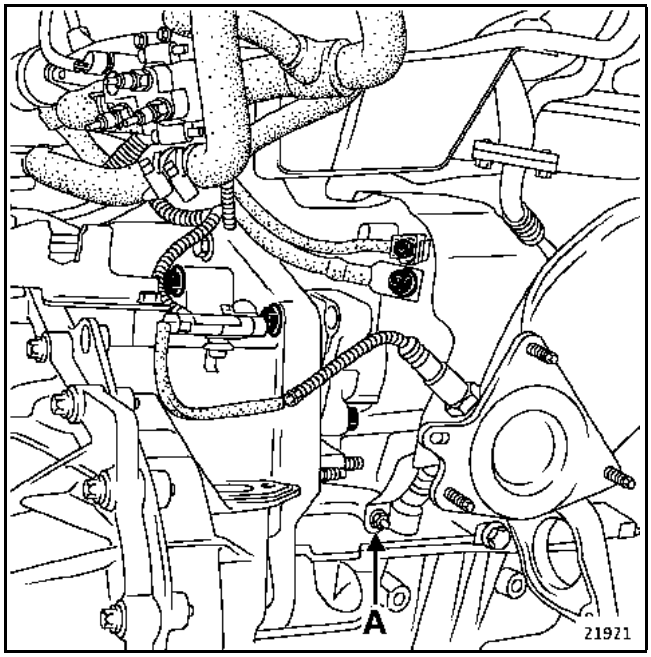

Remove the starter motor.

GETtheMANUALS.org

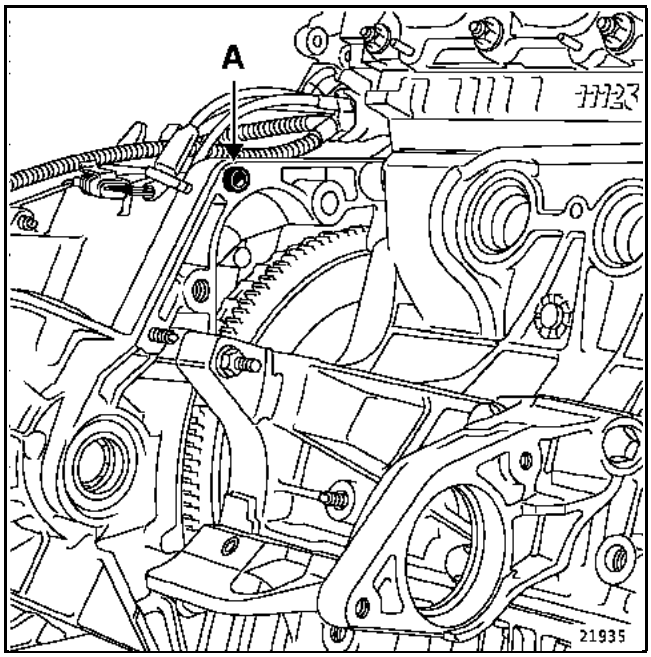

REFITTING

Proceed in the reverse order to removal.

Check that the centring dowel is in position (A).

GETtheMANUALS.org

REMOVAL

Put the car on a two-post lift.

Disconnect the battery.

Remove:
– the engine covers,
– the inlet hose (1),
– the damper hose (2),

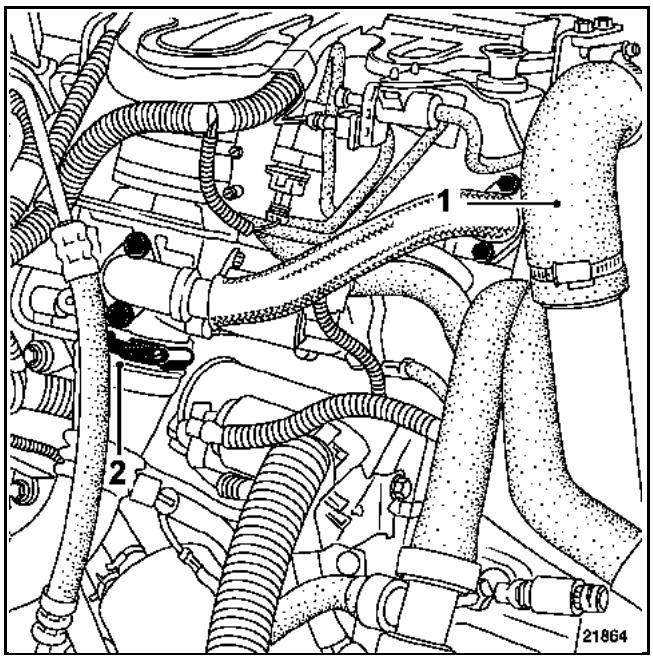

– the wiring harness bracket,
– starter electrical connections,
– the earth strap,
– starter motor.

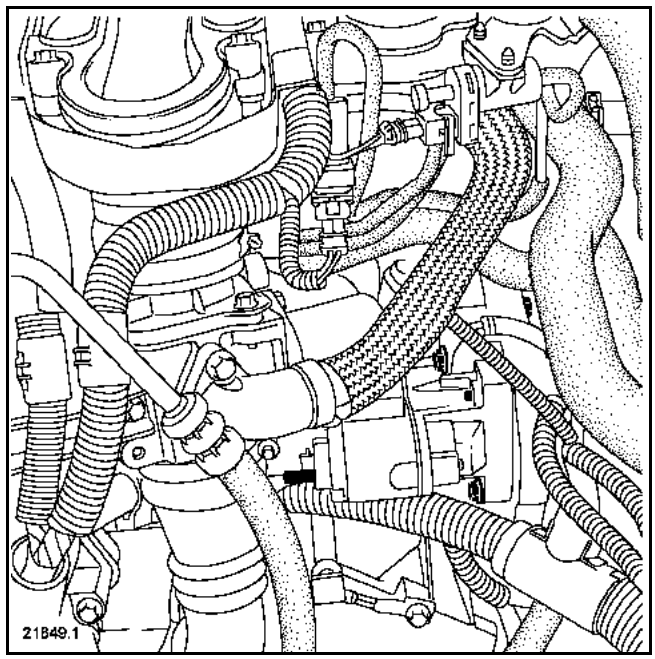

REFITTING

Refitting is the reverse of removal.

When refitting check that the centring dowel is in position.

GETtheMANUALS.org

REMOVAL

Put the car on a two-post lift.

Disconnect the battery.

Remove:
– the engine undertray,
– the starter motor connections.

Remove the wiring harness to gain access to the starter motor bolts.

Remove:
– the earth strap,
– the three starter motor mountings,

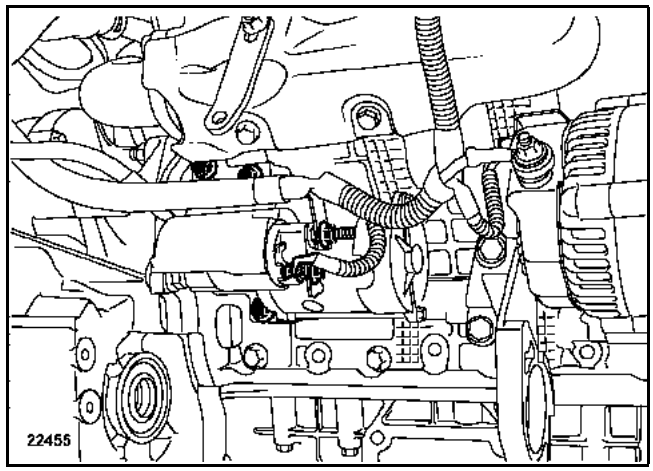

– starter motor.

REFITTING

Tighten the starter motor bolts to a torque of **5 daNm**.

Proceed in the reverse order to removal.

GETtheMANUALS.org

The removal/refitting of the starter motor does not present any particular difficulties, remove the two mountings at (A).

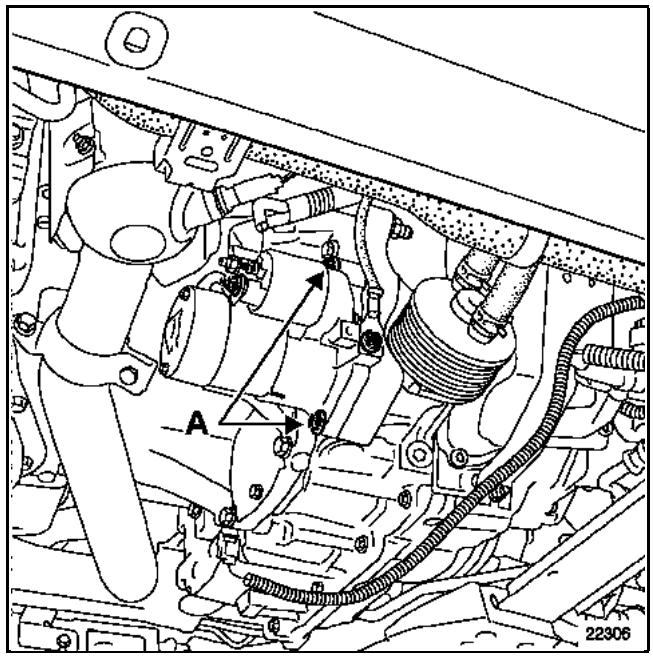

When refitting, check that the centring dowel is in position.

GETtheMANUALS.org

TIGHTENING TORQUES (in daNm)	
Ignition coil bolt	**1.5**
Spark plugs	**2.5 to 3**

DESCRIPTION

Static ignition is a system which increases the amount of power available to the spark plugs by eliminating all intermediaries between the spark plug and the coil.

The system also makes it possible to eliminate all moving components from the ignition.

The power module is incorporated in the injection computer. The ignition therefore uses the same sensors as the injection.

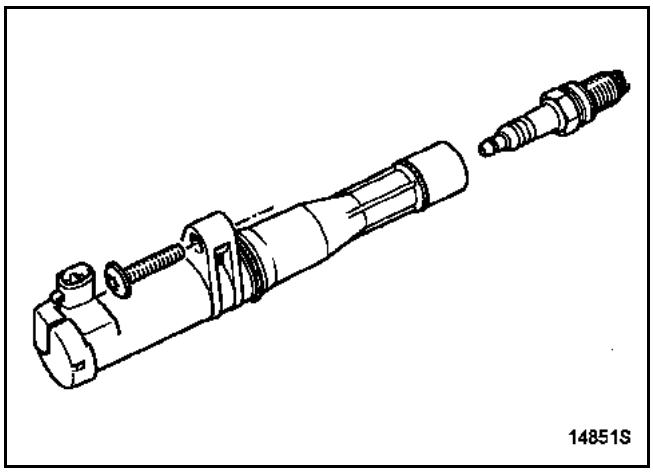

There are four ignition coils and each is mounted directly on the plug by a bolt on the cylinder head cover.

The coils are fed in series in pairs (twin static ignition) via tracks **C H2** and **C H3** of the injection computer:
– **track C H2** for cylinders (1) and (4),
– **track C H3** for cylinders (2) and (3).

REMOVING A COIL

Disconnect the battery.

Disconnect the ignition coils.

IMPORTANT:
take care not to damage the connectors (1); if they are damaged, they must be replaced.

Remove the coil fastening bolts (2).

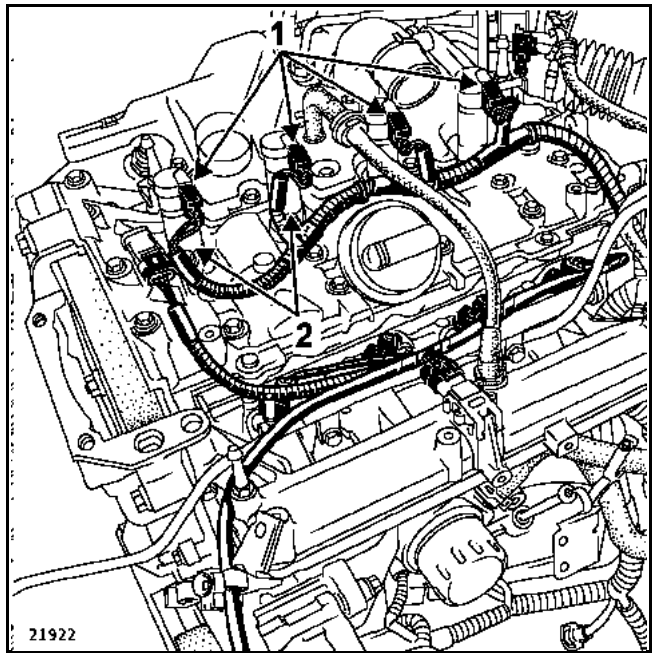

REFITTING

Proceed in the reverse order to removal. If necessary, replace the coil O-rings.

GETtheMANUALS.org

TIGHTENING TORQUES (in daNm)	
Ignition coil bolt	**0.7**
Spark plugs	**2.5 to 3**

DESCRIPTION

Static ignition is a system which increases the amount of power available to the spark plugs by eliminating all intermediaries between the spark plug and the coil.

The system also makes it possible to eliminate all moving components from the ignition.

The power module is incorporated in the injection computer. The ignition therefore uses the same sensors as the injection.

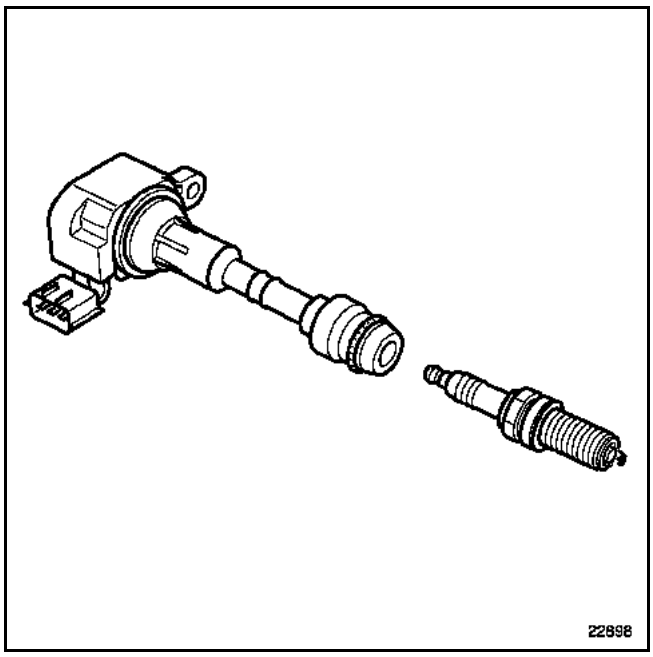

There are six ignition coils and each is mounted directly on the plug by means of a bolt on the cylinder head cover.

The firing order is: 1 - 2 - 3 - 4 - 5 - 6

The coils are fed one by one in series by **tracks B84, B85, B92, B93, B94** and **B95** of the injection computer:
– **track B84** for cylinder (5),
– **track B85** for cylinder (6),
– **track B92** for cylinder (1),
– **track B93** for cylinder (2),
– **track B94** for cylinder (3),
– **track B95** for cylinder (4),

REMOVING A COIL

Disconnect the battery.

To remove the coils from the rear cylinders, it is necessary to remove the inlet manifold (see **section 12A Fuel mixture: inlet manifold**).

Disconnect the ignition coils and remove the coil mounting bolts (1).

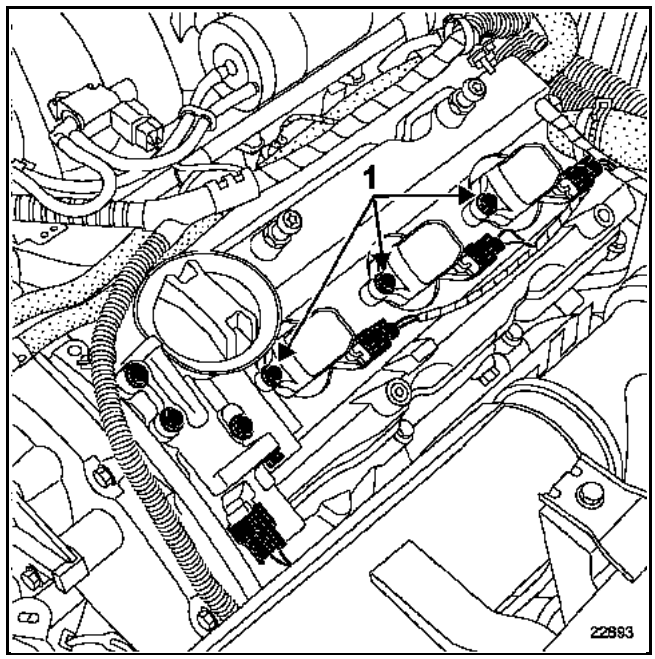

REFITTING

Proceed in the reverse order to removal. If necessary, replace the coil O-rings.

GETtheMANUALS.org

To remove the spark plugs, it is necessary to remove the ignition coils (see **section 17 Ignition Static ignition**).

To remove the spark plugs, use the plug spanner: **Elé. 1382**.

Engine	Marque	Type
F4R	CHAMPION	RC 8 PYCB
Flat skirt with seal		
Gap: **0.75 mm**		
Tightening torque: **2.5** to **3 daNm**		

Engine	Marque	Type
V4Y	NGK	PLFR5A
Flat skirt with seal		
Gap: **1.1 mm**		
Tightening torque: **2.5** to **3 daNm**		

GETtheMANUALS.org

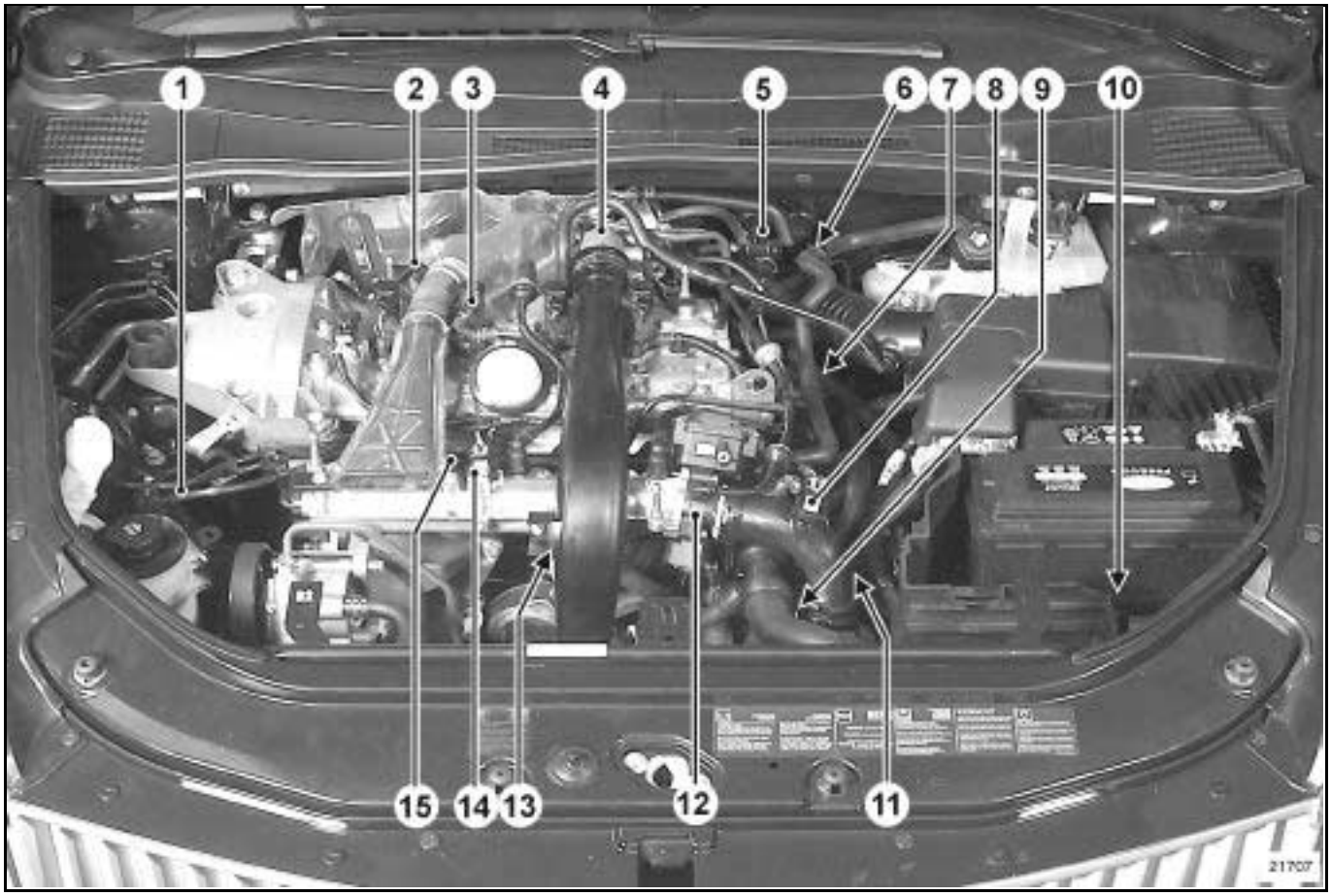

1 Fuel vapour recycling solenoid valve
2 Upstream oxygen sensor
3 Ignition coils
4 Turbocharger
5 Turbocharging pressure adjustment solenoid valve
6 Thermoplunger unit
7 Coolant temperature sensor
8 Turbocharger pressure sensor
9 TDC sensor
10 Injection computer
11 Air temperature sensor
12 Motorised throttle body
13 Pinking sensor
14 Manifold pressure sensor
15 Injector rail

GETtheMANUALS.org

1 Fuel vapour recycling solenoid valve

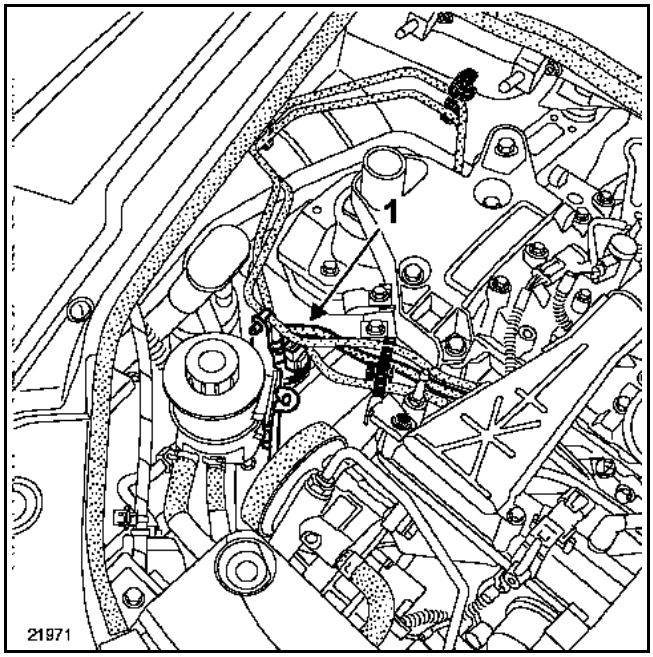

2 Upstream oxygen sensor
16 Downstream oxygen sensor

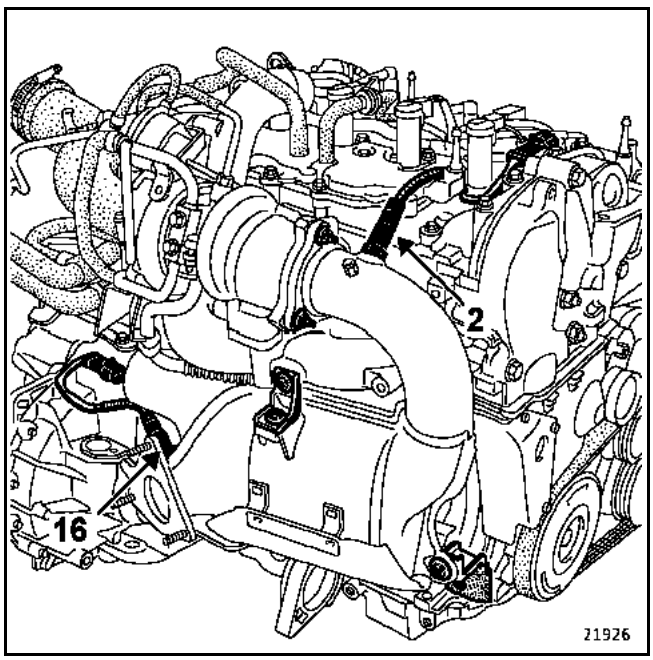

3 Ignition coil
14 Manifold pressure sensor

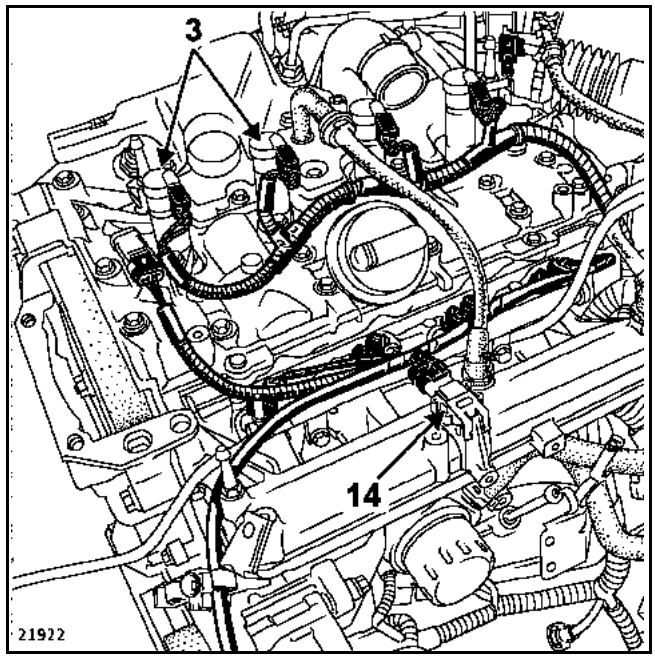

5 Turbocharging pressure adjustment solenoid valve
17 Turbocharging pressure regulation valve control diaphragm
18 Anti-pumping valve

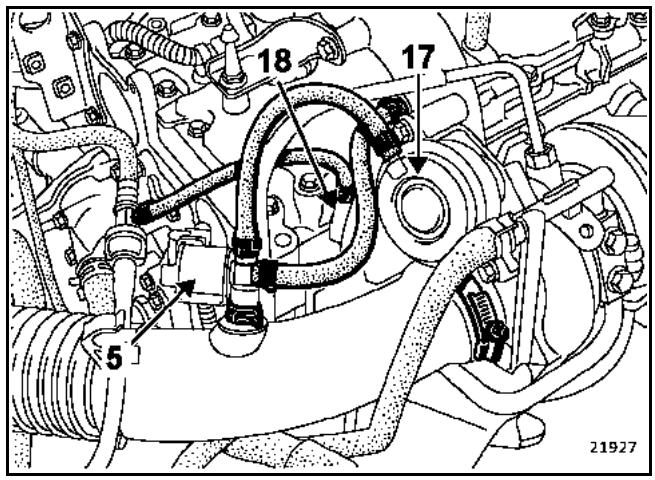

GETtheMANUALS.org

6 Thermoplunger unit

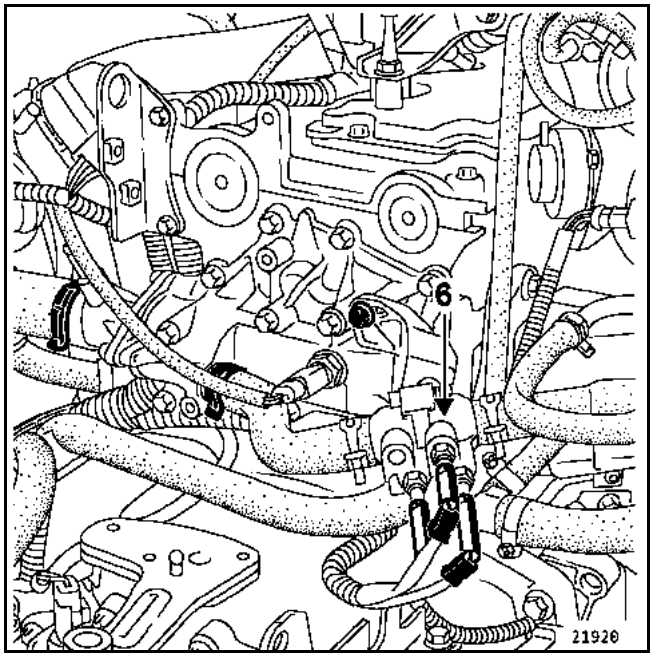

7 Coolant temperature sensor
8 Turbocharging pressure sensor
11 Air temperature sensor

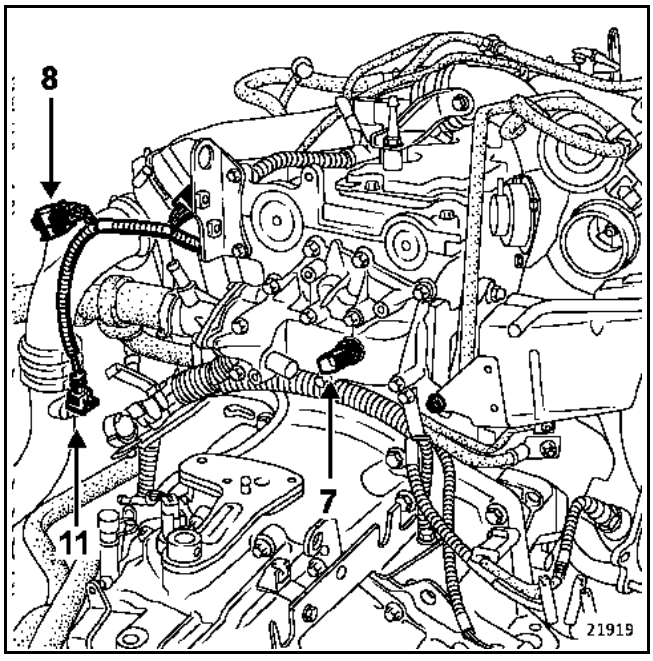

9 TDC sensor

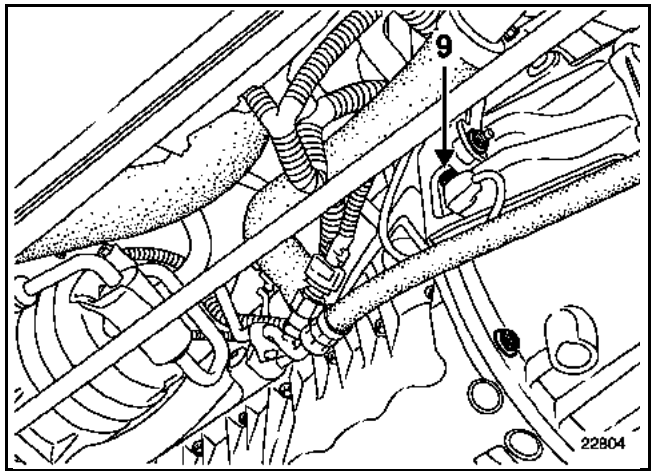

13 Pinking sensor
19 Oil pressure sensor

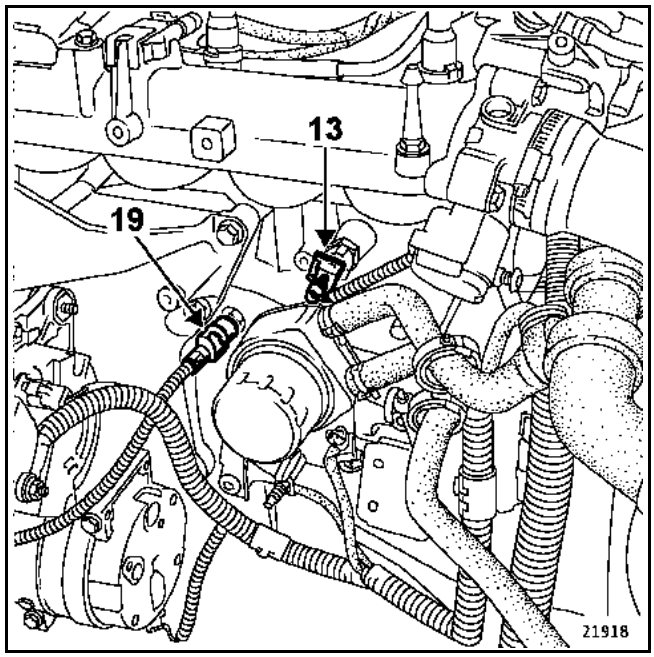

GETtheMANUALS.org

20 Fuel vapour absorber

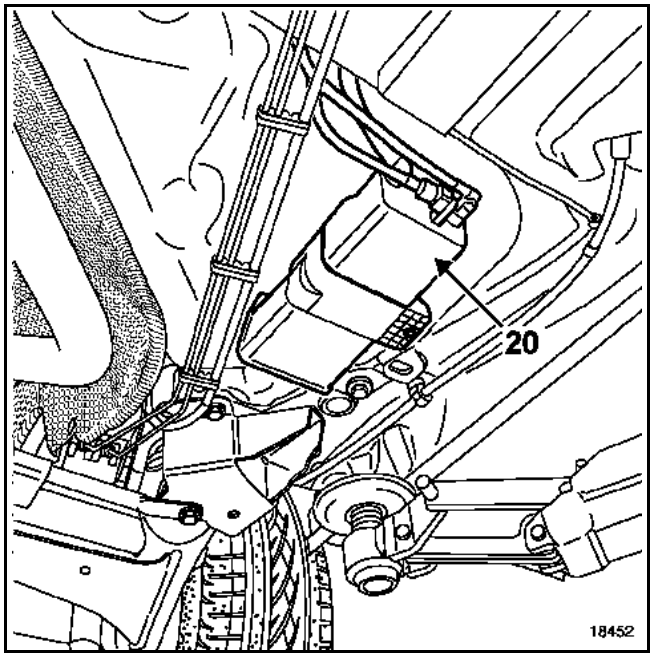

21 Accelerator pedal potentiometer

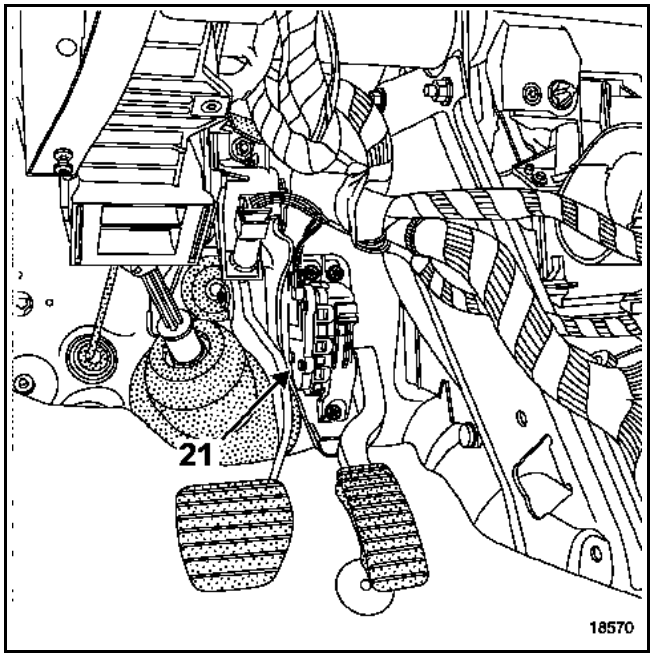

22 Injection relay

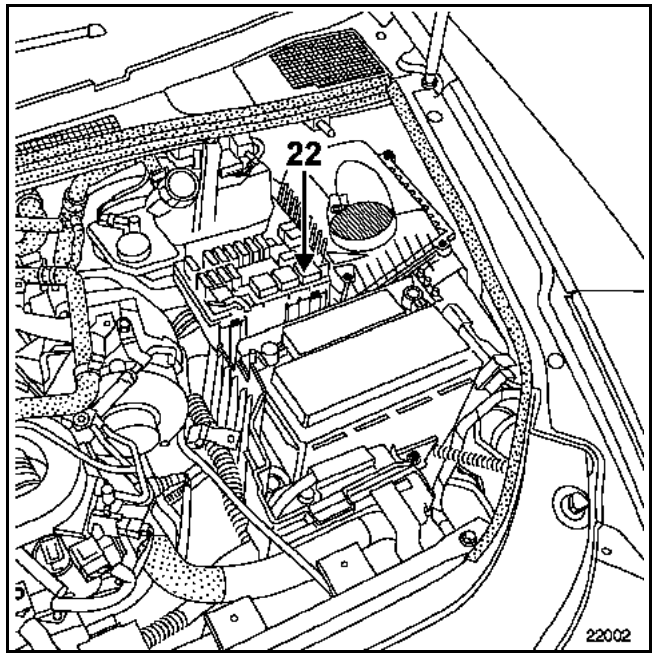

GETtheMANUALS.org

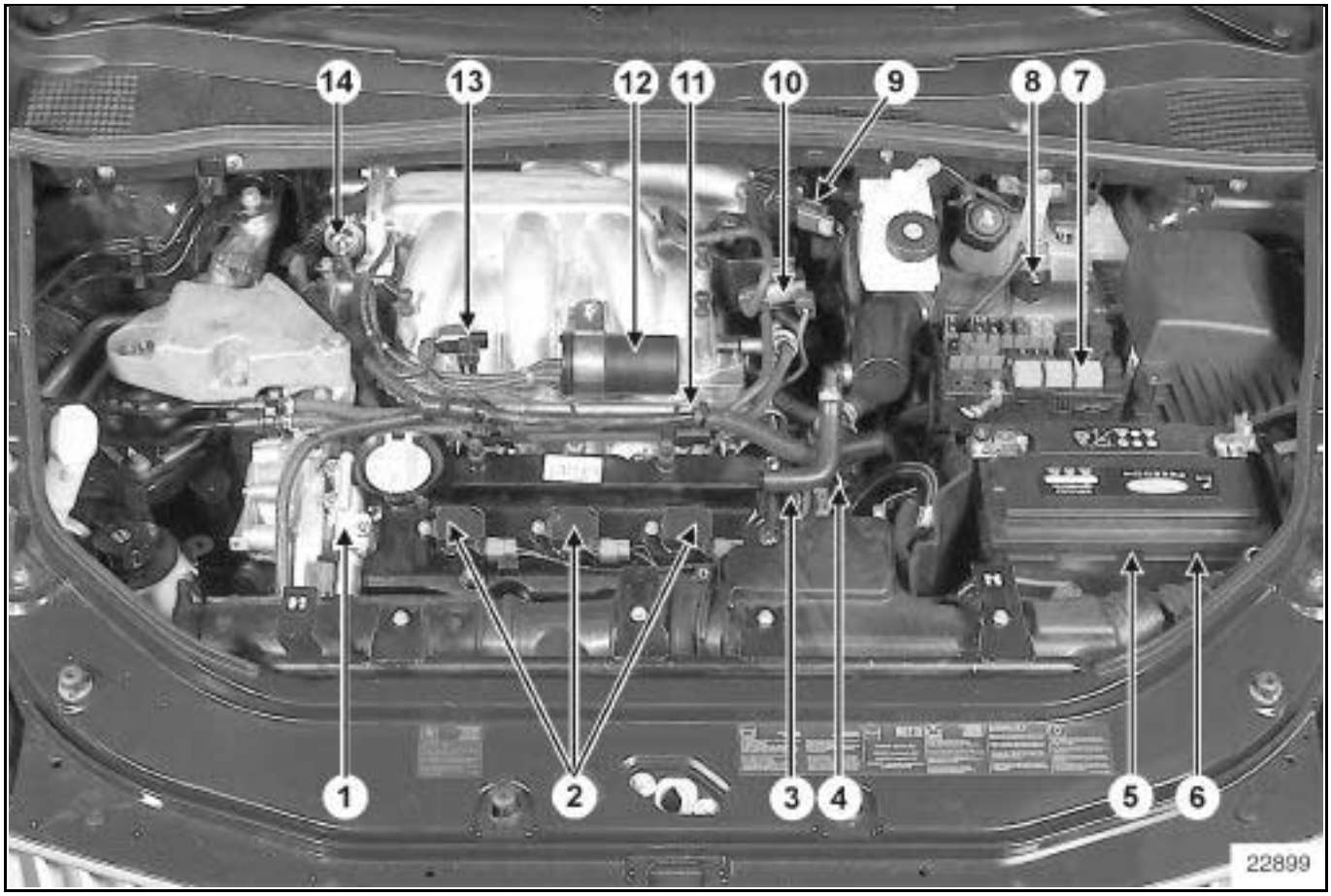

1 Camshaft dephaser
2 Ignition coils
3 Camshaft sensor
4 Coolant temperature sensor
5 Injection computer
6 Atmospheric pressure sensor
7 Relay unit
8 Air flowmeter with air temperature sensor
9 Motorised throttle body
10 Fuel vapour recycling solenoid valve
11 Injector
12 Vacuum canister
13 Air inlet flap control solenoid valve
14 Air inlet flap control diaphragm

GETtheMANUALS.org

1 Variable air inlet flap control diaphragm
2 Vacuum reservoir
3 Variable air inlet flap control solenoid valve
4 Fuel vapour recycling solenoid valve

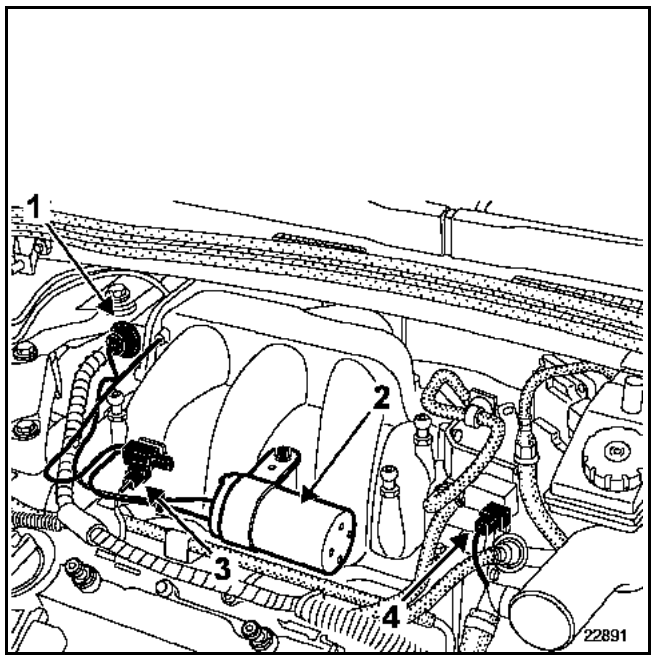

5 Camshaft dephaser (front cylinder)
6 Ignition coils

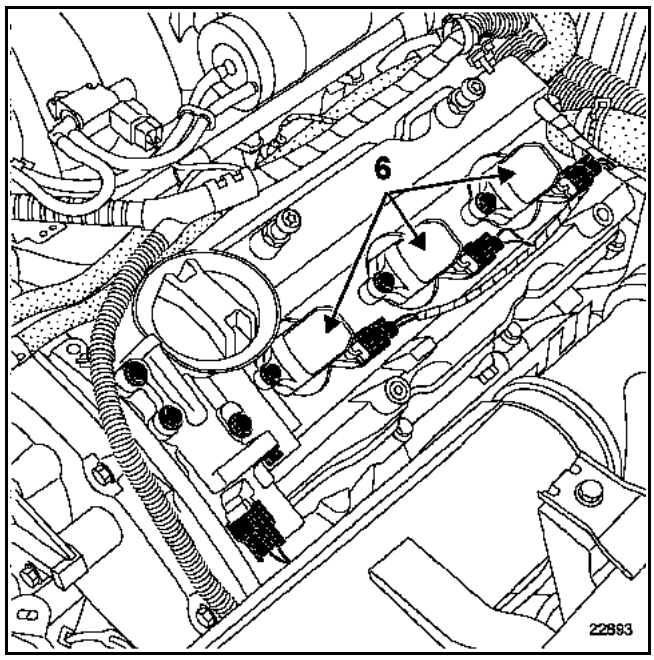

7 Coolant temperature sensor
8 Camshaft sensor
9 Pulse damper

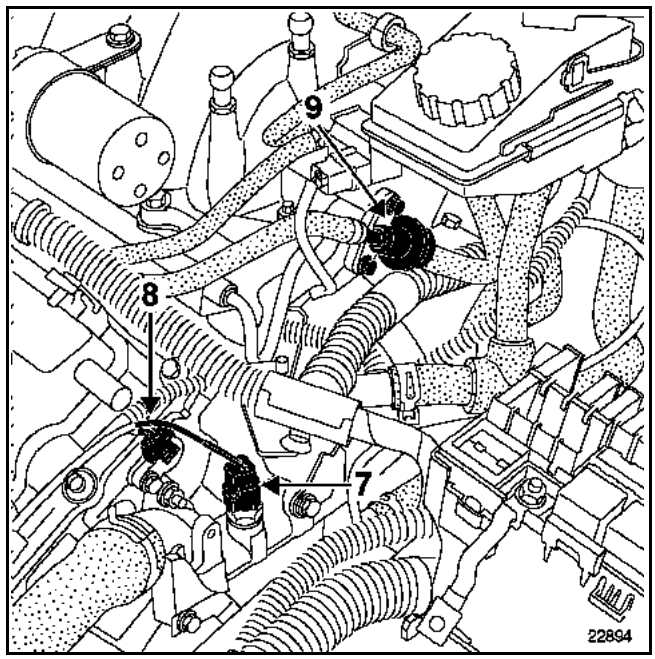

10 Injection computer
11 Atmospheric pressure sensor

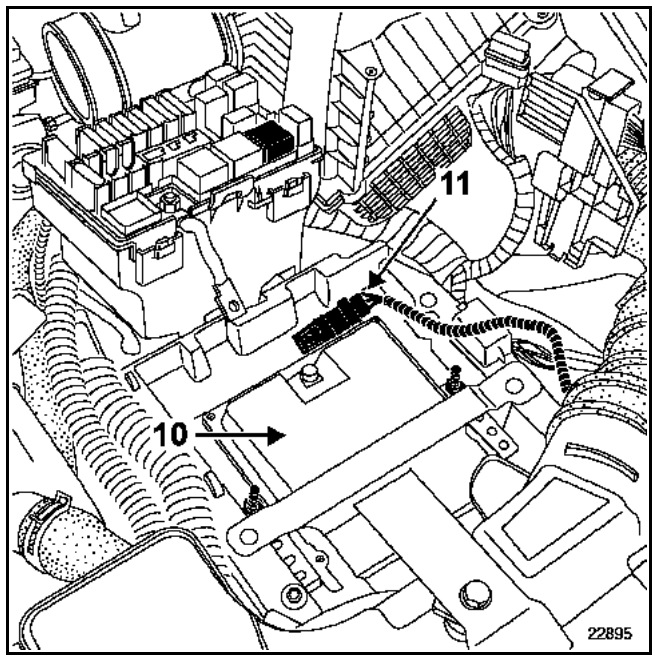

GETtheMANUALS.org

12 Air flowmeter with air temperature sensor
13 Injection locking relay
14 Fuel pump relay

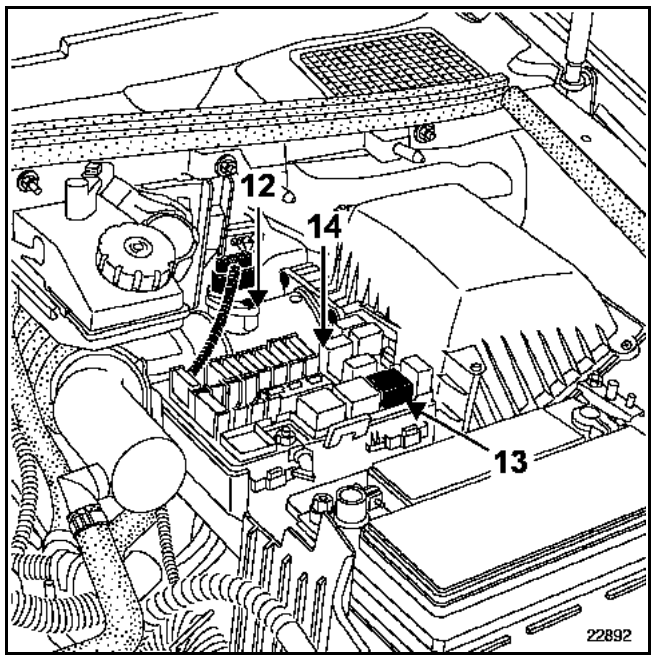

15 Upstream oxygen sensor (rear cylinders)

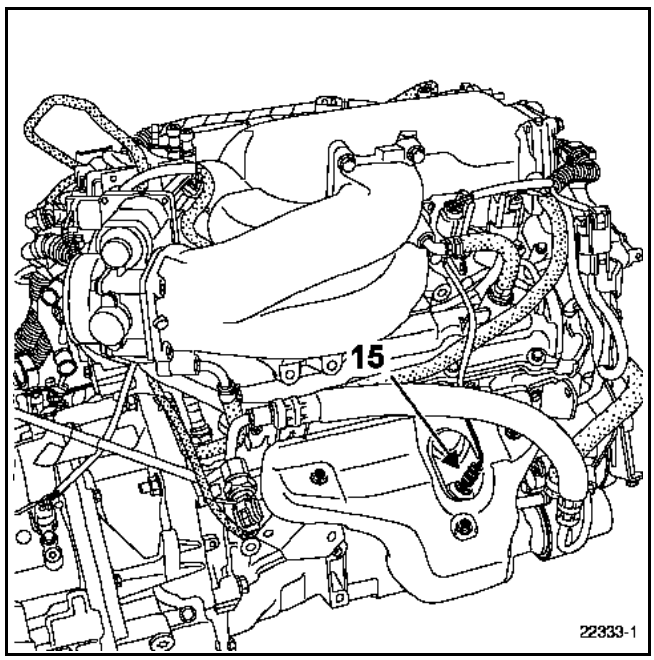

16 Upstream oxygen sensor (front cylinders)

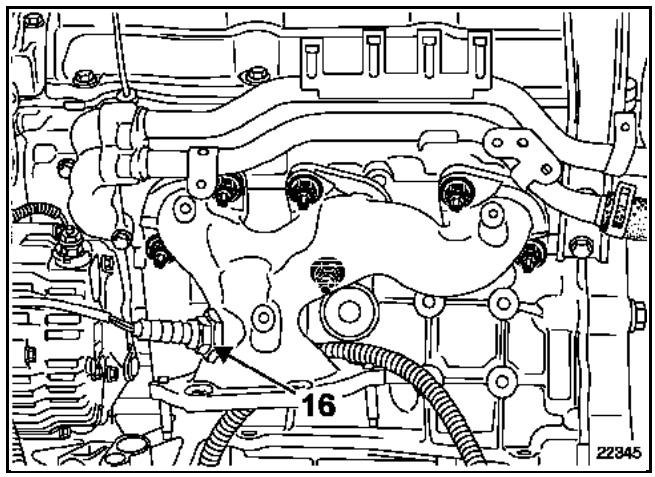

17 Downstream oxygen sensor (front cylinders)

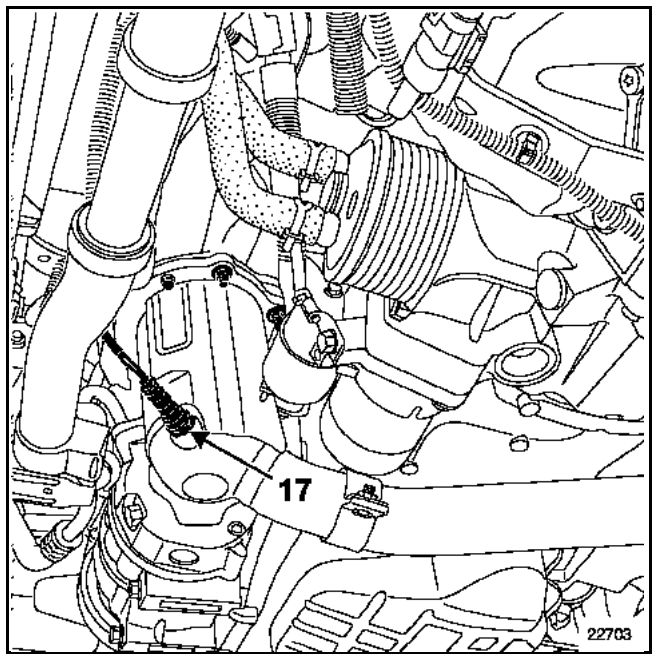

GETtheMANUALS.org

18 Fuel vapour absorber

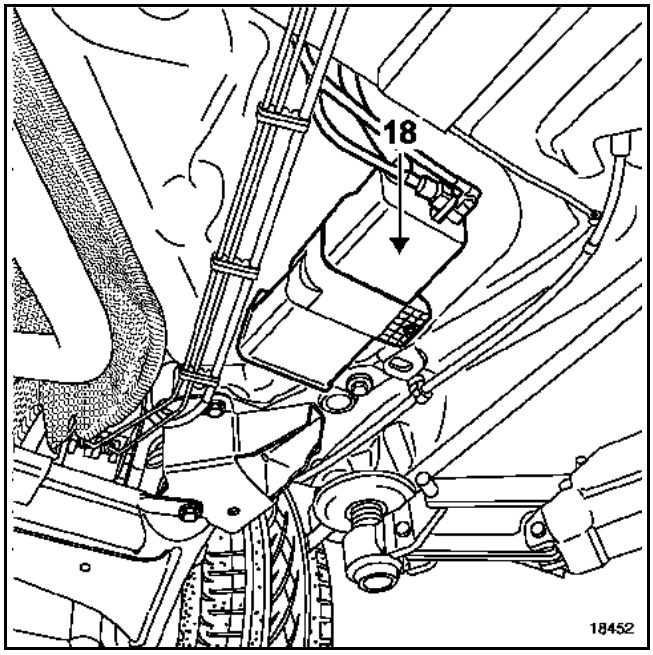

19 Pinking sensor

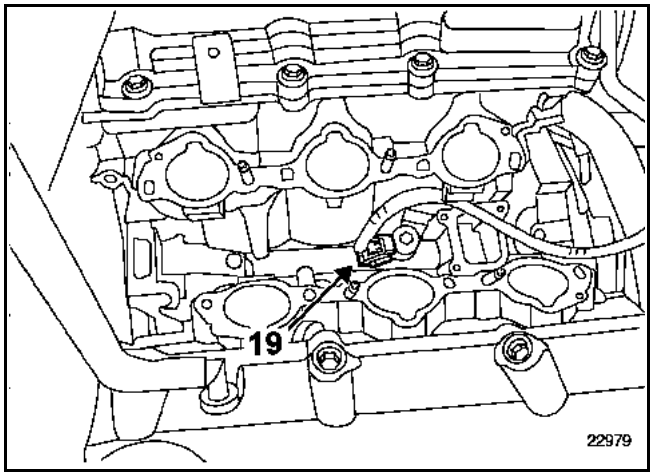

20 Power assisted steering pressure sensor

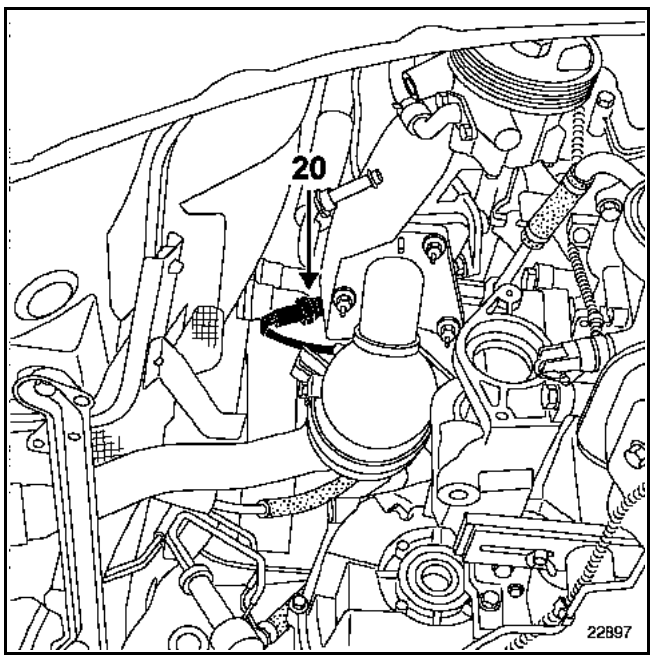

21 Injector rail

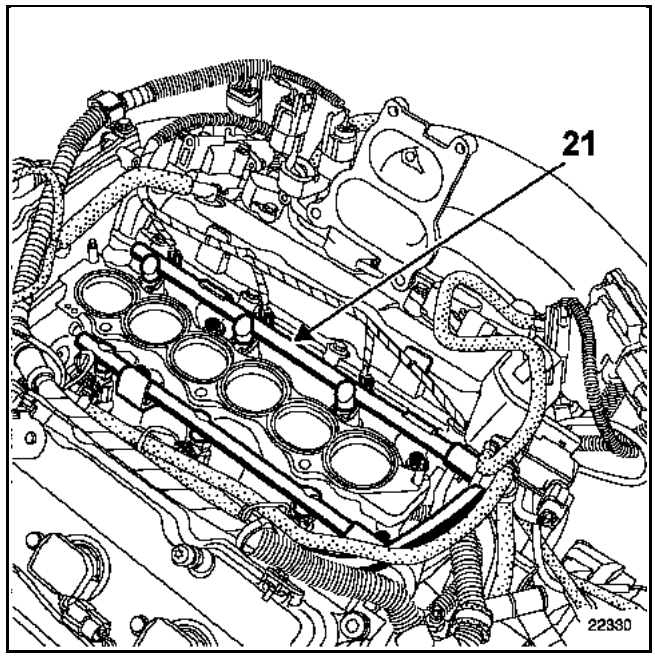

22 TDC sensor

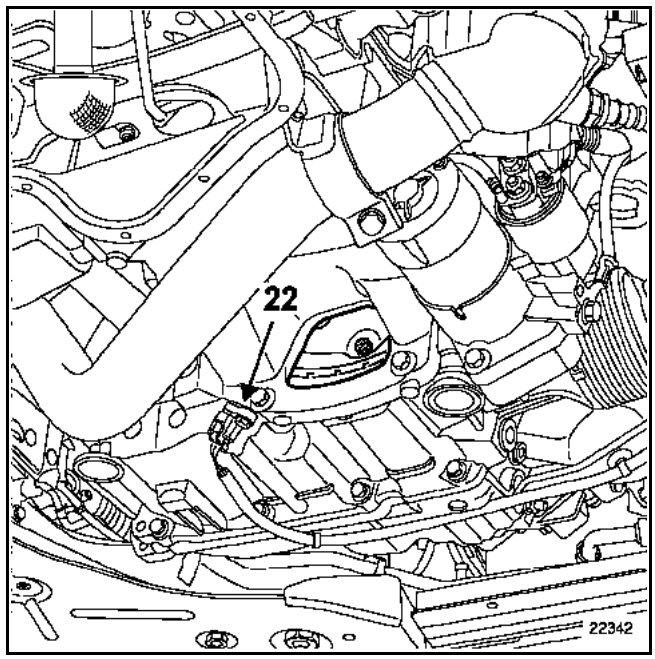

GETtheMANUALS.org

GENERAL INFORMATION

The accelerator pedal potentiometer is incorporated in the accelerator pedal. Its replacement therefore requires replacement of the accelerator pedal.

There are two types of pedal: **with or without kickdown point**.

Cars equipped with cruise control/speed limiter have an accelerator pedal with a point of resistance at the end of their travel (kickdown).

This kickdown point makes it possible to exit the speed limiter function if the driver has to increase his speed.

IMPORTANT:
it is possible to fit a pedal with a kickdown point in place of a pedal without a kickdown point. However, fitting a pedal without a kickdown point in place of a pedal with a kickdown point is forbidden.

REMOVAL

Disconnect:
– the battery,
– the accelerator pedal connector (1).

Remove:
– the three pedal mounting bolts (2),
– the pedal.

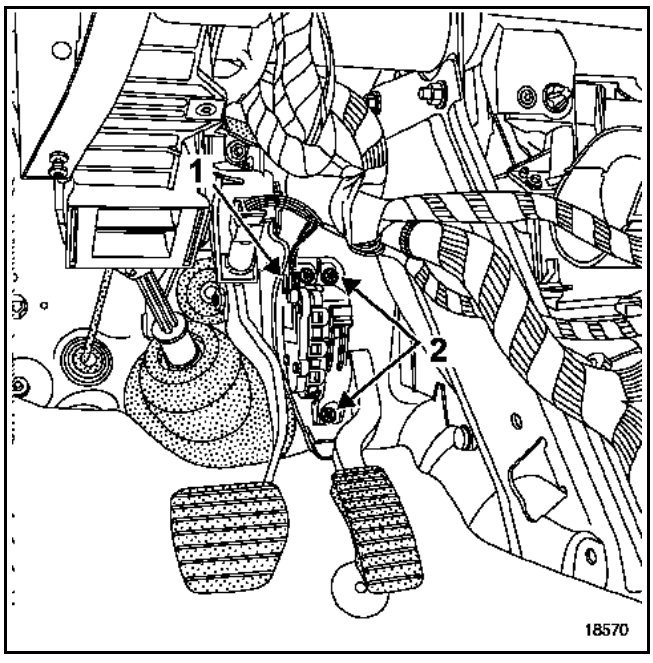

REFITTING

Proceed in the reverse order to removal.

Track	Description
1	Track 2 earth
2	Track 1 earth
3	Track 1 signal
4	Track 1 feed
5	Track 2 feed
6	Track 2 signal

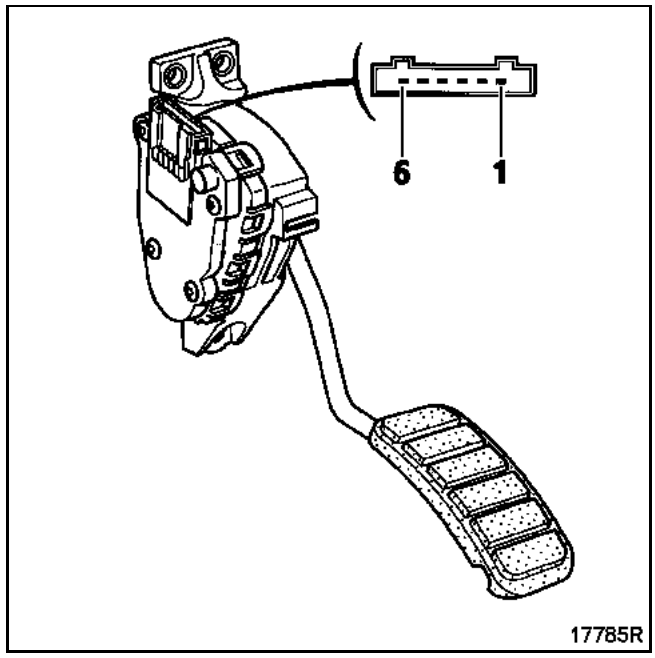

NOTE:
A fault on the accelerator position potentiometer causes changes in the idle speed or engine operation (see **Section 17B Idle speed correction**).

GETtheMANUALS.org

SPECIAL TOOLING REQUIRED	
Mot. 1372	Tamperproof bolt extractor

GENERAL INFORMATION

The injection computer is located under the battery tray. To remove it, it is necessary to remove the battery tray, which is held in place by three tamperproof bolts.

REMOVAL

Remove the engine covers.

Disconnect the battery.

Remove the battery.

Unclip the relay unit (1) from the battery tray and move it out of the way.

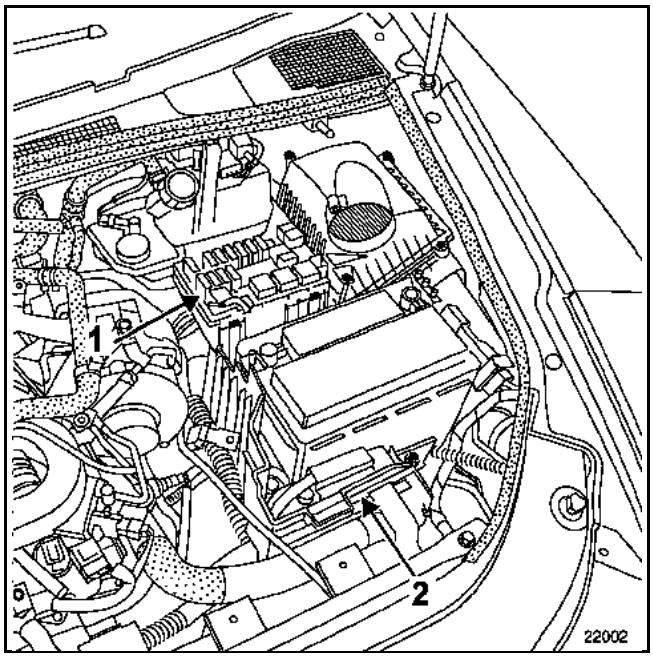

Disconnect and then remove the automatic transmission computer (2) (if fitted).

Unclip the connector holder (3) from the battery tray.

Pierce the three tamperproof bolts in the bolt shaft using a **5 mm** diameter drill bit.

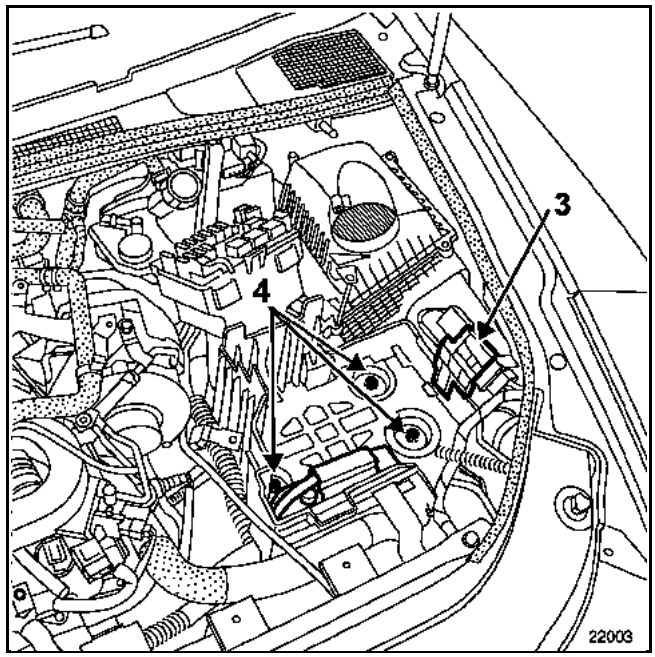

Remove:
– the three mounting bolts (4) from the battery tray using tool **Mot. 1372**,

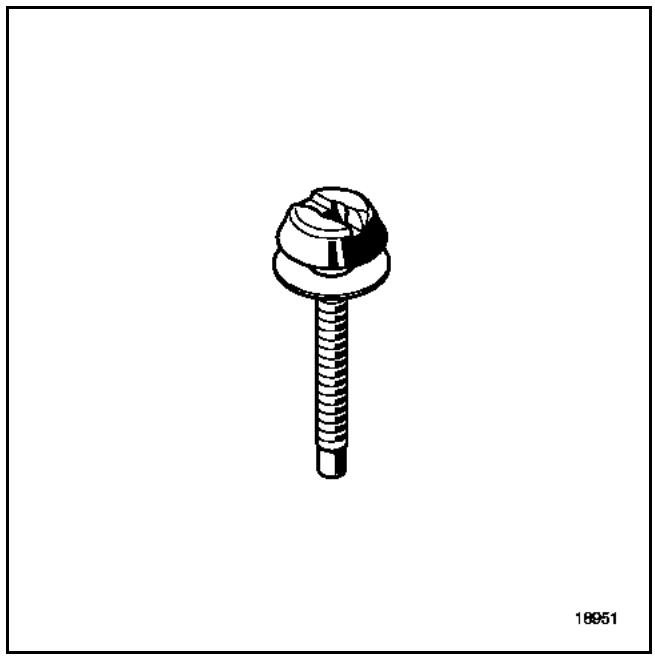

– the battery tray.

GETtheMANUALS.org

Remove:
– the electric wiring retaining strap (5),
– the computer mounting nuts (6),
– the computer and disconnect it.

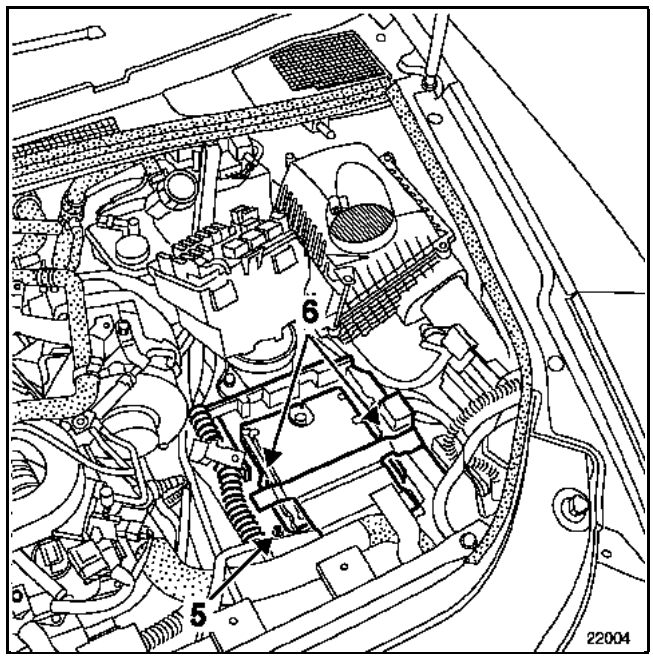

REFITTING

Proceed in the reverse order to removal.

Replace the tamperproof screws with new ones.

Program the immobiliser code following the procedure described in **section 82A Immobiliser "immobiliser"**.

GETtheMANUALS.org

SPECIAL FEATURES OF THE SAGEM "S 2000 T" MULTIPOINT INJECTION

- SAGEM "S 2000 T" type 112-track computer controlling the injection and the ignition.

- Multipoint injection operating in sequential mode without cylinder no. 1 marking sensor on camshaft. This means that phasing is controlled by software using the TDC sensor.

- Injection warning light on the instrument panel. Installation of a special injection warning light (**OBD O**n **B**oard **D**iagnostic warning light). Its presence is due to the fact that the **OBD O**n **B**oard **D**iagnostic fault finding system is fitted.

- Special precautions relating to the engine immobiliser:
  Installation of a 3rd generation immobiliser which requires a special method for replacing the computer.

- Fuel circuit without return to the tank (the pressure regulator is located on the pump/sender unit).

- Idle speed
  – nominal idle speed **750 rpm**
  – idle speed when automatic transmission is operating **750 rpm**
  Idle speed corrected according to:
  – the air conditioning,
  – the power assisted steering pressure switch,
  – battery voltage,
  – the heated windscreen,
  – the thermoplungers.

- Maximum engine speeds:
  When the coolant temperature is below **75 °C**, or for a maximum of **15 minutes**, the engine cut-off speed is **5900 rpm** which is the cut-off speed to protect a cold engine.

  Once the engine is warm, the cut-off returns to its normal value: **6200 rpm**

- Petrol vapour absorber bleed solenoid valve controlled by **O**pening **C**yclic **R**atio depending on the engine speed and manifold pressure.

- Control of the fan assembly and of the coolant temperature warning light on the instrument panel by the injection computer.

- Automatic configuration for the operation of the cruise control/speed limiter and for air conditioning operation.

- Use of two oxygen sensors located upstream and downstream of the catalytic converter.

- Motorised throttle body to regulate the airflow and the idle speed.

GETtheMANUALS.org

SPECIAL FEATURES OF THE HITACHI MULTIPOINT INJECTION

- HITACHI 121-track computer.
- Sequential multipoint injection controls the injectors one by one in firing order 1-2-3-4-5-6 (nos. 1 and 2 on the timing side, no. 1 on the rear bank).
- Static ignition with six pencil coils.
- Injection warning light on the instrument panel.
- Installation of a specific injection warning light (**OBD light O**n **B**oard **D**iagnostic) which is lit for **3 seconds** when the ignition is switched on. Its presence is due to the fact that the **OBD O**n **B**oard **D**iagnostic fault finding system is fitted.
- Special precautions relating to the engine immobiliser:
  Installation of a 3rd generation immobiliser which requires a special method for replacing the computer.
- Fuel circuit without return to the tank (the pressure regulator is located on the pump/sender unit).
- Idle speed
  – nominal idle speed **650 rpm**
- Idle speed corrected according to:
  – air conditioning, **700 rpm**
  – power assisted steering pressure switch **variable**
  – battery voltage, **variable**
- Maximum speed: **6600 rpm**
- Petrol vapour absorber bleed solenoid valve controlled by **O**pening **C**yclic **R**atio depending on operation of the engine.
- The fan unit and the coolant temperature warning light on the instrument panel are controlled by the injection computer (Central Coolant Temperature Management).
- Automatic configuration for the operation of the cruise control, distance check assistance and speed limiter and for air conditioning operation.
- Injection computer in control of the compressor depending on instructions from the air conditioning computer and engine operating conditions.
- Use of four oxygen sensors located upstream and downstream of the pre-catalytic converters.
- Continually variable inlet camshaft dephasers controlled by two solenoid valves managed by the computer according to engine speed and load.
- Motorised throttle body to regulate the airflow and the idle speed.
- Variable intake system for filling the cylinders with the optimum amount of air.

GETtheMANUALS.org

Vehicles are fitted with an injection warning light and a coolant warning light displayed on the instrument panel. With an **OBD O**n **B**oard **D**iagnostic warning light indicated by an orange engine displayed on the speedometer dial.

The injection fault warning light is indicated by an orange sine curve and the message "injection fault". The coolant warning light is indicated by a red thermometer along with the words "coolant temperature".

NOTE:
when the ignition is switched on, the **OBD** (**O**n **B**oard **D**iagnostic) warning light comes on then goes out after approximately **3 seconds**.

PRINCIPLE FOR WARNING LIGHTS COMING ON

- When there is an injection fault, the injection fault warning light comes on and you must contact a Renault dealer. These faults are:
  - turbocharging pressure sensor fault,
  - manifold pressure sensor fault,
  - air temperature sensor fault,
  - accelerator potentiometer fault,
  - internal computer fault,
  - motorised throttle body fault,
  - turbocharging pressure adjustment solenoid valve fault,
  - computer supply fault
  - turbocharging circuit fault.

- When the engine overheats , the coolant temperature warning light comes on.

- When a fault causing excessive pollution is detected, the **OBD** (**O**n **B**oard **D**iagnostic) warning light comes on:
  - **flashes** in the event of a fault which might cause damage to the catalytic converter (destructive misfires),
  - **continuously** if pollution standards are exceeded (polluting misfires, catalytic converter fault, oxygen sensor fault).

GETtheMANUALS.org

Vehicles that operate with the HITACHI fuel injection systems have fault symbols and written messages that appear clearly on an instrument panel display.

PRINCIPLE FOR WARNING LIGHTS COMING ON

- When there is an injection fault (level 1), the orange symbol (indicated by a sine curve), appears along with the words "FUEL INJECTION FAULT" then "SERVICE". Depending on the vehicle equipment, the voice synthesiser gives out the message "Level 1 faults". These faults are:
  - atmospheric pressure sensor fault,
  - camshaft sensor fault,
  - TDC sensor fault,
  - coolant temperature sensor fault,
  - air flowmeter fault,
  - accelerator pedal potentiometer fault,
  - motorised throttle body fault,
  - injector fault,
  - camshaft dephaser solenoid valve fault,
  - brake pedal switch fault,
  - variable air intake flap control solenoid valve fault
  - ignition coil fault,
  - sensor feed fault,
  - computer fault,
  - communication fault between the injection computer and automatic gearbox computer.

- When a serious injection fault occurs (level 2), the red symbol (indicated by an engine and the word "stop"), appears along with the message "SWITCH OFF ENGINE", then "STOP". Depending on the vehicle equipment level, the voice synthesiser issues the Level 2 faults message. In this event the vehicle must be stopped immediately. This fault is:
  - engine overheating fault.

- When the engine overheats, the engine temperature fault symbol appears on the display as "COOLANT TEMPERATURE" followed by "STOP". In this event the vehicle must be stopped immediately.

- When the ignition is switched on, the orange **O**n **B**oard **D**iagnostic warning light (represented by an engine), comes on for **3 seconds** then goes out.
  When a fault leading to excess exhaust gas pollution is detected, the orange **OBD** (**O**n **B**oard **D**iagnostic) warning light represented by an engine comes on:
  - **flashes** in the event of a fault which might cause damage to the catalytic converter (destructive misfires),
  - **continuously** if pollution standards are not maintained (polluting misfires, catalytic converter fault, oxygen sensor fault, fuel supply system fault, incoherence between the oxygen sensors and petrol vapour absorber fault).

GETtheMANUALS.org

This vehicle is fitted with a 3rd generation immobiliser system, controlled by a RENAULT card random rolling code recognition system, which requires a specific method for replacing the computer.

REPLACING AN INJECTION COMPUTER

See **Section 17B Injection Computer** for the procedure for removing and refitting the computer.

See **Section 82A Immobiliser** for the immobiliser functions.

Injection computers are supplied without a code, but they can all be programmed with one.

When the computer is replaced, the vehicle code must be programmed in and then a check must be made to ensure that the immobiliser system is operational.

To do this, switch on the ignition for a few seconds without starting the engine, then switch it off. With the ignition off, the engine immobiliser function comes into operation after approximately **10 seconds** (the red engine immobiliser warning light flashes).

WARNING:

With this engine immobiliser system, the computer keeps its immobiliser code for life.

In addition, this system does not have a security code.

Consequently, it is forbidden to perform tests with computers borrowed from the stores or from another vehicle which must then be returned.

It will no longer be possible to decode them.

GETtheMANUALS.org

THE COMPRESSOR IS OF VARIABLE DISPLACEMENT TYPE

AIR CONDITIONING - INJECTION COMPUTER CONNECTION

The injection computer controls the compressor clutch, taking into account the power absorbed by the compressor and the pressure of the refrigerant in the circuit.

The data used for the air conditioning function is exchanged via the multiplex network:
– **Track A A3** CAN L multiplex link (passenger compartment),
– **Track A A4** CAN H multiplex link (passenger compartment),

When the air conditioning is switched on, the air conditioning control panel requests authorisation to engage the compressor clutch. The injection computer either authorises or inhibits engagement of the compressor clutch, controls the fan unit and orders fast idle speed. This engine speed is **900 rpm**.

IMPORTANT:
The refrigerant fluid pressure and absorbed power values are never equal to **0**, whatever the state of the compressor, engaged or not.

COMPRESSOR OPERATION PROGRAMMING

During certain stages of operation, the injection computer prevents the compressor from operating.

Engine starting program

The compressor is prevented from operating for **10 seconds** after the engine is started.

Performance return programming during pulling away on a gradient.

To assist in pulling away on a gradient, the air conditioning compressor motor is not loaded for **10 seconds**.

Entry conditions
- Engine speed greater than **1600 rpm**
- AND vehicle speed less than **6 mph (10 km/h)**
- AND the throttle position is greater than **30 %**
- AND gearbox lower than **1st gear**

Output conditions
- **10 seconds** delay
- OR vehicle speed greater than **11 mph (18 km/h)**
- OR internal gearbox ratio above **1st gear**

Maximum engine speed protection programming

The compressor is disengaged if the engine speed is greater than **6304 rpm**.

Thermal protection program

The compressor does not engage if the coolant temperature is above **+ 115 °C** at high speed and full load.

GETtheMANUALS.org

THE COMPRESSOR IS OF VARIABLE DISPLACEMENT TYPE

AIR CONDITIONING COMPUTER - INJECTION COMPUTER CONNECTION

The injection computer controls the compressor depending on instructions from the air conditioning computer and engine operating conditions.

The data used for the function is exchanged via the multiplex network:
– **Track A12** CAN H multiplex link (passenger compartment).
– **Track A13** CAN L multiplex link (passenger compartment).

When the air conditioning is switched on, the air conditioning control panel requests authorisation to engage the compressor clutch. The injection computer either authorises or inhibits engagement of the compressor clutch, controls the fan unit and orders fast idle speed. This engine speed is **700 rpm**.

IMPORTANT:
The refrigerant fluid pressure and absorbed power values are never equal to **0**, whatever the state of the compressor, engaged or not.

COMPRESSOR OPERATION PROGRAMMING

During certain stages of operation, the injection computer prevents the compressor from operating.

Engine starting program

The compressor is prevented from operating for **10 seconds** after the engine is started.

Thermal protection program

The compressor does not engage if the coolant temperature is above **+ 115 °C**. It is engaged once again when the coolant temperature drops back below **110 °C**.

Recovery of performance

The compressor is disengaged for **5 seconds** if:

Entry conditions
– sharp pressure on the accelerator pedal, **above 67°**.

Output conditions
– **5-second** delay has passed,
– pressing the accelerator pedal, **below 59°**.

GETtheMANUALS.org

Engine overspeed protection programming

The compressor is disengaged if the engine speed exceeds **5400 rpm** then re-engaged when it drops below **4900 rpm**.

Anti-stall programming on the power-assisted steering

Engine coolant temperature **above 60°C**.

When the vehicle speed is less than **18 mph (30 km/h)** or when the accelerator pedal is in no load position, the compressor is disengaged for **5 seconds** if the power assisted steering is in use at the same time.

GETtheMANUALS.org

MOTORISED THROTTLE VALVE

The motorised throttle body carries out idle speed regulation and engine air inlet modulation functions. It is composed of an electric motor and two throttle position potentiometers.

When the engine is idling, the throttle position is adjusted according to the idle speed setting. This setting takes into account the major power consumers (air conditioning) and operating conditions (air temperature and coolant temperature).

When the driver depresses the accelerator pedal, his request is translated as the angle of the throttle opening. However, to improve driving pleasure, the throttle opening is not directly proportional to the driver's request.

To eliminate misfires, facilitate gear changes and perform the safety functions, the throttle valve modulates the engine torque.

MOTORISED THROTTLE BODY DEFECT MODES

The motorised throttle body has three types of defect mode.

- **Reduced Performance Mode:** this mode covers electrical faults for which there is a viable backup solution for the injection system (loss of one of the two tracks on the pedal or the throttle body).
  This mode results in reduced acceleration and limits the maximum opening of the throttle.

- **Loss of driver intervention mode:** this mode is also called the **Electrical Limp Home** mode. This mode is applied when the accelerator pedal signal disappears completely, but the injection computer still controls the intake of air to the engine (automatic throttle control is still operational).
  In this mode, the injection computer imposes a set engine speed for each gear ratio and imposes the idle speed when the brake pedal is pressed.

- **Mechanical Limp Home Mode:** this mode covers breakdowns which result in loss of the automatic throttle control (the throttle can no longer be controlled).
  In this case the throttle is in the mechanical rest position and the injection computer limits the engine speed by cutting off the injection.

NOTE:
Each of these modes results in illumination of the injection fault warning light on the instrument panel.

GETtheMANUALS.org

MOTORISED THROTTLE VALVE

The motorised throttle body carries out idle speed regulation and engine air inlet modulation functions. It is composed of an electric motor and two throttle position potentiometers.

When the engine is idling, the throttle position is adjusted according to the idle speed setting. This setting takes into account the major power consumers (air conditioning) and operating conditions (air temperature and coolant temperature).

When the driver moves the accelerator pedal, his request is translated as a call for torque which causes the throttle to open and the ignition to advance.

To eliminate misfires, facilitate gear changes and perform the safety functions, the throttle valve modulates the engine torque.

MOTORISED THROTTLE BODY DEFECT MODES

The motorised throttle body has three types of defect mode.

- **Reduced Performance Mode:** this mode covers electrical faults for which there is a viable backup solution for the injection system (loss of one of the two tracks on the pedal or the throttle body).
  This mode results in reduced acceleration and limits the maximum opening of the throttle.

- **Mechanical Limp Home Mode:** this mode covers breakdowns which result in loss of the automatic throttle control (the throttle can no longer be controlled) or faults related to loss of pedal signals.
  In these cases the throttle is in the mechanical rest position and the injection computer limits the engine speed by cutting off the injection.

NOTE:
Each of these modes results in illumination of the injection fault warning light on the instrument panel.

GETtheMANUALS.org

IDLE SPEED CORRECTION ACCORDING TO COOLANT TEMPERATURE

Coolant temperature in °C ± 1	-20°	20°	40°	80°	100°	120°
Engine speed in rpm	1072	976	896	752	752	848

ELECTRICAL CORRECTION ACCORDING TO BATTERY VOLTAGE AND ELECTRIC POWER BALANCE

The purpose of this adjustment is to compensate for the drop in voltage due to a power consumer being switched on when the battery is not charged sufficiently. It starts when the voltage falls below **12.7 V** and the engine speed may reach a maximum of **910 rpm**.

POWER ASSISTED STEERING PRESSURE SWITCH / INJECTION COMPUTER LINK

The injection computer receives a signal from the power assisted steering pressure switch and may increase the idle speed to compensate for this power consumption.

The idling speed is increased to **784 rpm**.

IDLE SPEED ADJUSTMENT ACCORDING TO THE HEATED WINDSCREEN SIGNAL

If the windscreen is selected and if the coolant temperature is lower than **60 °C**, the idle speed is fixed at **990 rpm**.

IDLE SPEED CORRECTION WHEN THERMOPLUNGERS ARE IN OPERATION

When the thermoplungers are operating (coolant temperature below **75°C**), the idle speed is fixed between **900 rpm and 1000 rpm**.

IDLE SPEED ADJUSTMENT WHEN THERE IS AN ACCELERATOR PEDAL POTENTIOMETER FAULT

If there is a fault on the two accelerator pedal position potentiometers, then the engine speed rises to about **1500 rpm**. When the brake pedal is depressed, this speed drops back to **750 rpm**.

ADJUSTMENT OF THE IDLE SPEED WHEN THERE IS A MOTORISED THROTTLE BODY FAULT

If there is a fault on the two throttle position potentiometers, the throttle body goes into limp-home mode (mechanical stop). The engine speed is then a maximum of **2500 rpm**.

NOTE:
After starting at cold and long operation at idle speed it is possible to notice a sharp drop in the engine speed of approximately **220 rpm**. This drop in engine speed is due to the presence of the automatic starter.

GETtheMANUALS.org

IDLE SPEED CORRECTION ACCORDING TO COOLANT TEMPERATURE

Coolant temperature in °C ± 1	-30	-20	- 10	0	10	30	40	50	60	70	90	110
Engine speed in rpm	1000	1000	950	950	950	950	850	800	750	650	650	650

ELECTRICAL CORRECTION ACCORDING TO BATTERY VOLTAGE AND ELECTRIC POWER BALANCE

The purpose of this adjustment is to compensate for the drop in voltage due to a power consumer being switched on when the battery is not charged sufficiently. It starts when the voltage falls below **12.8 V** for **10 seconds** and the engine speed may reach a maximum of **850 rpm**.

POWER ASSISTED STEERING PRESSURE SWITCH / INJECTION COMPUTER LINK

To compensate for the consumption of energy during a full lock manoeuvre, the injection computer receives a steering circuit pressure signal (track A18). It can increase the idle speed by several revs per minute.

IDLE SPEED ADJUSTMENT WHEN THERE IS AN ACCELERATOR PEDAL POTENTIOMETER FAULT

If there is a fault on the two accelerator pedal position potentiometer tracks, then the engine speed rises to **2000 rpm**.

ADJUSTMENT OF THE IDLE SPEED WHEN THERE IS A MOTORISED THROTTLE BODY FAULT

If there is a fault on the two throttle position potentiometer tracks, the throttle body enters Mechanical Limp Home Mode (throttle body mechanical stop).

The engine speed is limited to approximately **1800 rpm**.

GETtheMANUALS.org

ADAPTIVE IDLE SPEED CORRECTION

PRINCIPLE

Under normal hot engine operating conditions, the Opening Cyclic Ratio (OCR) value varies between a high value and a low value, so that the nominal idle speed is obtained.

It is possible that during variations in the operation of the vehicle (running in, engine wear, etc.), that the Opening Cyclic Ratio (OCR) could become close to the highest or lowest values.

The adaptive correction on the idle speed opening cyclic ratio (OCR) enables the engine's air requirement to be slowly varied, by bringing the opening cyclic ratio back to a nominal average value..

This adjustment only takes effect if the coolant temperature is above **75 ºC** and **32 seconds** after the engine has been started and during the idle speed regulation phase.

VALUE OF THE IDLING OPENING CYCLIC RATIO AND ITS ADAPTIVE CORRECTION

Nominal idle speed	**X = 750 rpm**
Idle speed plenum chamber pressure	X = **320 mbar**
Idling **Opening Cyclic Ratio**	**3 % ≤ X ≤ 30 %**
Idling adaptive **Opening Cyclic Ratio**	Min. stop: **- 7.8 %** Max. stop: **+ 7.8 %**

INTERPRETATION OF THESE PARAMETERS

If there is an excess of air (air intake or throttle stop incorrectly adjusted, etc.), the engine idling speed increases and the idle speed OCR value reduces in order to return to nominal idle speed; the adaptive adjustment value of the idle speed OCR signal reduces in order to reset the idle speed OCR signal.

If there is insufficient air (due to clogging, etc.), the logic is inverse: the idle speed OCR signal increases and the adaptive adjustment also increases in order to reset the idle speed regulation operation.

IMPORTANT:
After the computer memory has been cleared, it is imperative to start, stop, then leave the engine running at idle speed so that the adaptive adjustment can recalibrate itself correctly.

GETtheMANUALS.org

RICHNESS REGULATION

An engine using the "SAGEM S 2000 T" computer is equipped with two oxygen sensors, called the upstream and the downstream sensor.

SENSOR HEATING

Heating the oxygen sensors is controlled by the computer:
– the inlet manifold pressure is below a threshold which depends on a mapping of the engine speed,
– the road speed is below **83 mph (135 km/h)**,
– after a certain amount of engine operating time controlled by the mapping, depending on the engine's top dead centre (excluding No Load operation), and the coolant temperature.

Heating the oxygen sensors stops:
– if the vehicle speed is greater than **87 mph (140 km/h)** (value given for information purposes),
– when the engine is under heavy load.

UPSTREAM SENSOR VOLTAGE

Parameter reading: upstream oxygen sensor voltage on the diagnostic tool: the value displayed indicates the voltage sent to the computer by the oxygen sensor placed upstream of the catalytic converter. It is expressed in millivolts. When the engine is operating in a closed loop, the voltage must oscillate rapidly between two values:
– **100 mV ± 100** for a lean mixture,
– **800 mV ± 100** for a rich mixture.

The smaller the difference between the minimum and maximum values, the poorer the signal from the sensor (the difference is usually at least **500 mV**).

NOTE:
If the difference is small, check the sensor heater.

DOWNSTREAM SENSOR VOLTAGE

Parameter reading: downstream oxygen sensor voltage on the diagnostic tool: the value displayed indicates the voltage sent to the computer by the oxygen sensor placed upstream of the catalytic converter. It is expressed in millivolts.

The function of this sensor is to locate faults on the catalytic converter and to perform a second more precise check on the richness (slow regulation loop). This function is activated only after the engine has been operating for a certain time.

When the engine is operating in a closed loop, at stabilised speed, the voltage should vary within the range **600 mV ± 100**.

When the engine is decelerating, the voltage should be less than **200 mV**.

The voltage read on the diagnostic tool at idling speed should be ignored.

GETtheMANUALS.org

MIXTURE CORRECTION

The value given under the richness correction parameter on the diagnostic tool represents the average value of richness corrections made by the computer depending on the richness of the burnt mixture as seen by the oxygen sensor located upstream of the catalytic converter (the oxygen sensor actually analyses the oxygen content of the exhaust gases).

The correction value has a mid-point of **128** and limits of **0** and **255**:
– value less than **128** = request for mixture to be made leaner.
– value greater than **128** = request for mixture to be made richer.

ENTRY INTO RICHNESS REGULATION MODE

Loop phase

The richness regulation starts after a maximum timed starting period of **15 minutes** and when the coolant temperature is above **0 °C**.

Loop opening phase

In richness regulation mode, the operating phases during which the computer ignores the value of the voltage from the sensor are:
- at full load,
- under heavy acceleration,
- when decelerating with no load information,
- when the oxygen sensor is faulty.

DEFECT MODE WHEN THE OXYGEN SENSOR IS FAULTY

When the voltage from the oxygen sensor is incorrect (varying only slightly or not at all) during mixture regulation, the computer will only enter defect mode if the fault has been recognised as present for **3 minutes**. Only in that case will the fault be memorised. In this case the richness correction is **116 or 152**.

If an oxygen sensor fault is present and detected and if the fault has already been memorised, the system enters the open loop mode directly.

GETtheMANUALS.org

An engine using the **HITACHI** computer is equipped with two oxygen sensors, called the upstream and downstream sensor.

SENSOR HEATING

The upstream oxygen sensor heater is controlled by the computer if all of the following conditions are met:
– engine speed is below **2800 rpm.**
– the battery voltage is lower than **15 V**,
– after a starting period of **4 seconds**.
– if the oxygen sensors are not faulty.

The downstream oxygen sensor heater is controlled by the computer provided all of the following conditions are met:
– engine speed is below **3200 rpm.**
– the battery voltage is lower than **15 V**,
– after a starting period of **2 minutes**,
– if the oxygen sensors are not faulty.

UPSTREAM SENSOR VOLTAGE

Parameter reading: upstream oxygen sensor voltage on the diagnostic tool: the value displayed indicates the voltage sent to the computer by the oxygen sensor placed upstream of the catalytic converter. It is expressed in millivolts.

When the computer corrects the richness according to the two sensors, the engine is said to be in a closed loop.

When the engine is operating in a closed loop, the voltage must oscillate rapidly between two values:
– **100** and **600 mV** for a lean mixture,
– **350** and **800 mV** for a rich mixture.

The smaller the difference between the minimum and maximum values, the poorer the signal from the sensor.

NOTE:
If the difference is small, check the sensor heater.

DOWNSTREAM SENSOR VOLTAGE

Read the downstream oxygen sensor voltage parameter on the diagnostic tool: the value read represents the voltage supplied to the computer by the oxygen sensor downstream of the catalytic converter. It is expressed in millivolts.

The function of this sensor is to locate faults on the catalytic converter and to perform a second more precise check on the richness (slow regulation loop). This function is activated only after the engine has been operating for a certain time.

When the engine is operating in a closed loop, the voltage should vary within the range **430 mV and 480 mV**. When the engine is decelerating, the voltage should vary around **0 mV**.

The voltage read on the diagnostic tool at idling speed should be ignored.

GETtheMANUALS.org

MIXTURE CORRECTION

The value read on the diagnostic tool on parameters: **PR173** and **PR174**, **Richness regulation row 1** or **2**, indicates the average richness correction made by the computer according to the fuel mixture richness recorded by the oxygen sensor positioned upstream on the catalytic converter (the oxygen sensor gives a real analysis of the oxygen level in the exhaust gas).

The adjustment value has a midpoint of **100%**:
– value lower than **100%**: requires a leaner mixture,
– value greater than **100%**: requires a richer mixture.

ENTRY INTO RICHNESS REGULATION MODE

The mixture regulation starts after a given starting delay (depending on the coolant temperature), that can vary between **6 seconds** for a temperature above **80 °C** to **30 seconds** for a temperature below **- 10 °C**.

Loop opening phase

In richness regulation mode, the operating phases during which the computer ignores the value of the voltage from the sensor are:
– at full load,
– under heavy acceleration,
– during deceleration with injection cut-off,
– when the oxygen sensor is faulty.

DEFECT MODE WHEN THE OXYGEN SENSOR IS FAULTY

When the voltage from the oxygen sensor is incorrect (varying only slightly or not at all) during mixture regulation, the computer will only enter defect mode if the fault has been recognised as present for **3 minutes**. In this case, the **Richness regulation row 1 or 2 parameters are 100%**.

If an oxygen sensor fault is present and recognised and if the fault has already been stored, the system enters the open loop mode directly.

GETtheMANUALS.org

PRINCIPLE

In closed loop phase, the richness regulation adjusts the injection timing so as to obtain a mixture as close as possible to richness 1. The adjustment value is close to **128**, with limits of **0** and **255**.

Adaptive mixture adjustment makes it possible to offset the injection mapping to reset the richness regulation to **128**.

Adaptive adjustments take **128** as the average value after initialisation (erasing the memory) and have the following limit values:

Mixture adjustment	**60 ≤ X ≤ 190**
Operating adaptive richness	**82 ≤ X ≤ 224**
Idle adaptive richness	**32 ≤ X ≤ 224**

Conditions:
– engine warm: (coolant temperature above **70 ºC**),
– do not exceed an engine speed of **4000 rpm**,
– disconnect the fuel vapour absorber by the solenoid valve or block the inlet pipe on the engine.

Pressure zones which must be passed through during the test

There are five pressure zones to cover during road testing. These zones are defined by the following calibrations:

	Range No. 1 (mbar)	Range No. 2 (mbar)	Range No. 3 (mbar)	Range No. 4 (mbar)	Range No. 5 (mbar)
F4R ENGINE	**250 ---------- 400 ---------- 517 ---------- 635 ---------- 753 ---------- 1298**				
	Average 325	**Average 458**	**Average 576**	**Average 694**	**Average 1025**

Deactivation of the adaptive programs in the case of prolonged idle speed regulation with a hot engine

If the coolant temperature is above **80 °C** at idle speed for more than **10 minutes**, the adaptive programs are frozen until idling ends.

Following this test the adjustments will be operational. The test should be followed by normal, smooth and varied driving over **5** to **10 kilometres**.

After the test, record the values of the adaptive programs. Initially **128**, they may have changed. If not, repeat the readings taking care to observe the test conditions strictly.

INTERPRETATION OF VALUES OBTAINED FROM A ROAD TEST'

In the case of a lack of fuel (injectors clogged, pressure and flow of fuel too low, etc), the richness regulation increases to obtain a richness as close as possible to **1** and the adaptive richness correction increases until the richness correction again fluctuates at around **128**. If there is excess fuel, the opposite is true.

GETtheMANUALS.org

PRINCIPLE

In closed loop mode, the richness regulation (**PR173** and **174**) corrects the injection timing to give fuel metering which is as close as possible to richness **1**. The correction value is around **100 %**, with limits of **75 %** and **125 %**.

The adaptive richness correction (**PR177** and **178**) makes it possible to offset the injection mapping to reset the richness regulation to **100 %**.

Adaptive correction takes **100 %** as the average value after initialisation (erasing the memory) and has the following limit values: **74 %** and **139 %**.

Richness regulation bank 1 or 2	**75 % ≤ PR173 and 174 ≤ 125 %**
Richness regulation adaption bank 1 or 2	**74 % ≤ PR177 and 178 ≤ 139 %**

Programming conditions for adaptive richness correction:
– engine warm, coolant temperature above **70 ºC**),
– closed loop richness regulation,
– disconnect the fuel vapour absorber by the solenoid valve or block the inlet pipe on the engine.

Following this test the adjustments will be operational. The test should be followed by normal, smooth and varied driving over **5** to **10 kilometres**.

After the test, record the values of the adaptive programs. Initially **100 %**, they should have changed. If not, repeat the readings taking care to observe the test conditions strictly.

INTERPRETATION OF VALUES OBTAINED FROM A ROAD TEST'

If there is a lack of fuel, the richness regulation (**PR173** and **174**) increases to obtain a richness as close as possible to **1** and the adaptive richness correction increases until the richness correction again fluctuates at approximately **100 %**. If there is excess fuel, the opposite is true.

GETtheMANUALS.org

The fan unit is controlled by the injection computer.

ANTI-PERCOLATION FUNCTION

The anti-percolation system is controlled by the injection computer.

The coolant temperature signal used is the one from the injection system.

After the engine is switched off the system enters monitoring mode. If the coolant temperature exceeds the limit of **107 °C** during the **49 seconds** after the engine is switched off, the fan unit is controlled at slow speed.

If the coolant temperature falls below **85 °C**, the fan unit relay is cut off (the fan unit cannot be controlled for more than **10 minutes**).

OPERATION OF THE FAN UNITS

– The fan unit is switched on at slow speed if the coolant temperature exceeds **98 °C** and is switched off when the temperature falls below **95 °C**.
– the fan unit is switched on at high speed if the coolant temperature exceeds **102 °C** and is switched off when the temperature falls below **99 °C**,

OPERATION OF THE TEMPERATURE WARNING LIGHT

The temperature warning light lights up continuously if the coolant temperature exceeds **118 °C**. It goes out when the temperature drops below **115 °C**.

OPERATION OF THE ELECTRIC COOLANT PUMP (TURBOCHARGER COOLING)

The turbocharger cooling system is controlled by the injection computer.

The coolant temperature signal used is the one from the injection system.

After the engine is switched off the system enters monitoring mode. If the coolant temperature exceeds **107 °C** during the **3 minutes** following stopping the engine, the coolant pump is controlled.

If the coolant temperature falls below **80 °C**, the coolant pump control relay is cut off (the electric coolant pump cannot be controlled for more than **10 minutes**).

GETtheMANUALS.org

The fan unit is controlled by the injection computer.

ANTI-PERCOLATION FUNCTION

The anti-percolation system is controlled by the injection computer.

The coolant temperature signal used is the one from the injection system.

After the engine is switched off the system enters monitoring mode. If the coolant temperature exceeds the limit of **102 °C** during the **2 minutes** after the engine is switched off, the fan unit is run at slow speed.

If the coolant temperature falls below **95 °C**, the fan unit relay is cut off. The fan unit cannot be switched on for more than **10 minutes**.

OPERATION OF THE FAN UNITS

– The fan unit is switched on at slow speed if the coolant temperature exceeds **99 °C** and is switched off when the temperature falls below **95 °C**.
– the fan unit is switched on at high speed if the coolant temperature exceeds **102 °C** and is switched off when the temperature falls below **99 °C**.

OPERATION OF THE TEMPERATURE WARNING LIGHT

The temperature warning light is lit if the coolant temperature exceeds **118 °C** and goes out when the temperature falls below **114 °C**.

ENGINE SPEED RESTRICTION IN THE EVENT OF ENGINE OVERHEATING

If the engine overheats, the engine speed is restricted to about **6375 rpm**.

GETtheMANUALS.org

The camshaft dephasers are located on the inlet camshaft. Their function is to modify the timing adjustment.

They are **continuously** activated by the injection computer via two solenoid valves.

The valves are controlled by an **O**pening **C**yclic **R**atio) signal.

They authorise oil flow in order to control the dephasers during certain operational stages of the engine.

OPERATING CONDITIONS

The camshaft dephaser control solenoid valves are controlled if all of the following conditions are met:
– no speed sensor fault
– no injection system faults
– no camshaft position sensor fault
– after the engine has started,
– above idling speed,
– battery voltage between **10** and **16 V**,
– engine speed > **at 1200 rpm**,
– coolant temperature between **60** and **120 °C**.

GETtheMANUALS.org

The three thermoplungers are located on a water unit fixed on the cylinder head at the engine - gearbox joint.

The purpose of the system is to reheat the coolant.

The thermoplungers are supplied with **12 V** by two relays. One relay controls two thermoplungers, the other relay controls one thermoplunger. This enables control of one, two or three thermoplungers as required.

The resistance of the thermoplungers is:
0.45 ± 0.05 Ω at 20 °C.

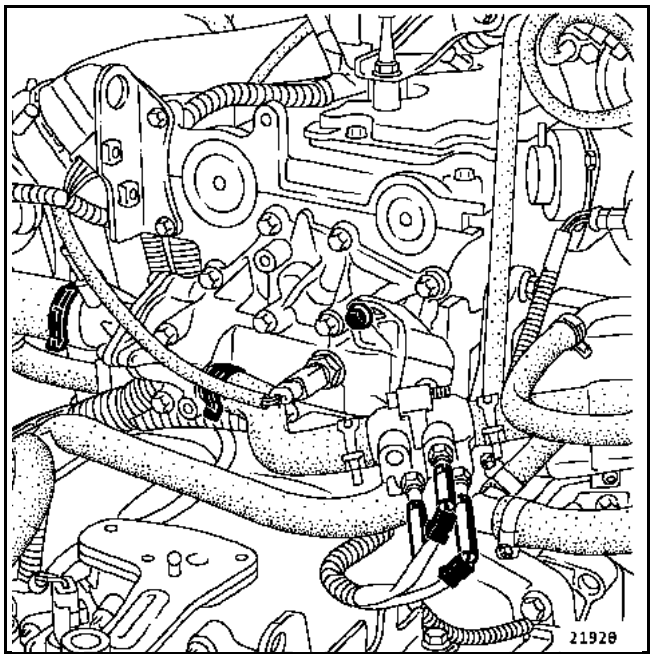

Control strategy

When the thermoplungers are operating, the idle speed is brought to **1000 rpm**.

Thermoplungers cannot operate:
– if heated windscreen is selected,
– if the temperature is greater than **75 °C**,
– if the battery voltage is less than **13 V**,

If the conditions mentioned above apply, the thermoplungers are controlled according to a mapping related to the air and coolant temperature.

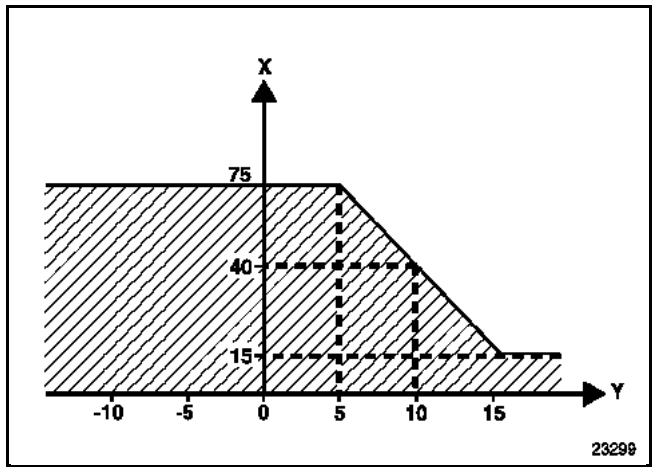

X Coolant temperature in ˚C
Y Air temperature in ˚C

Non shaded area: thermoplunger not supplied
Shaded area: thermoplunger supplied

GETtheMANUALS.org

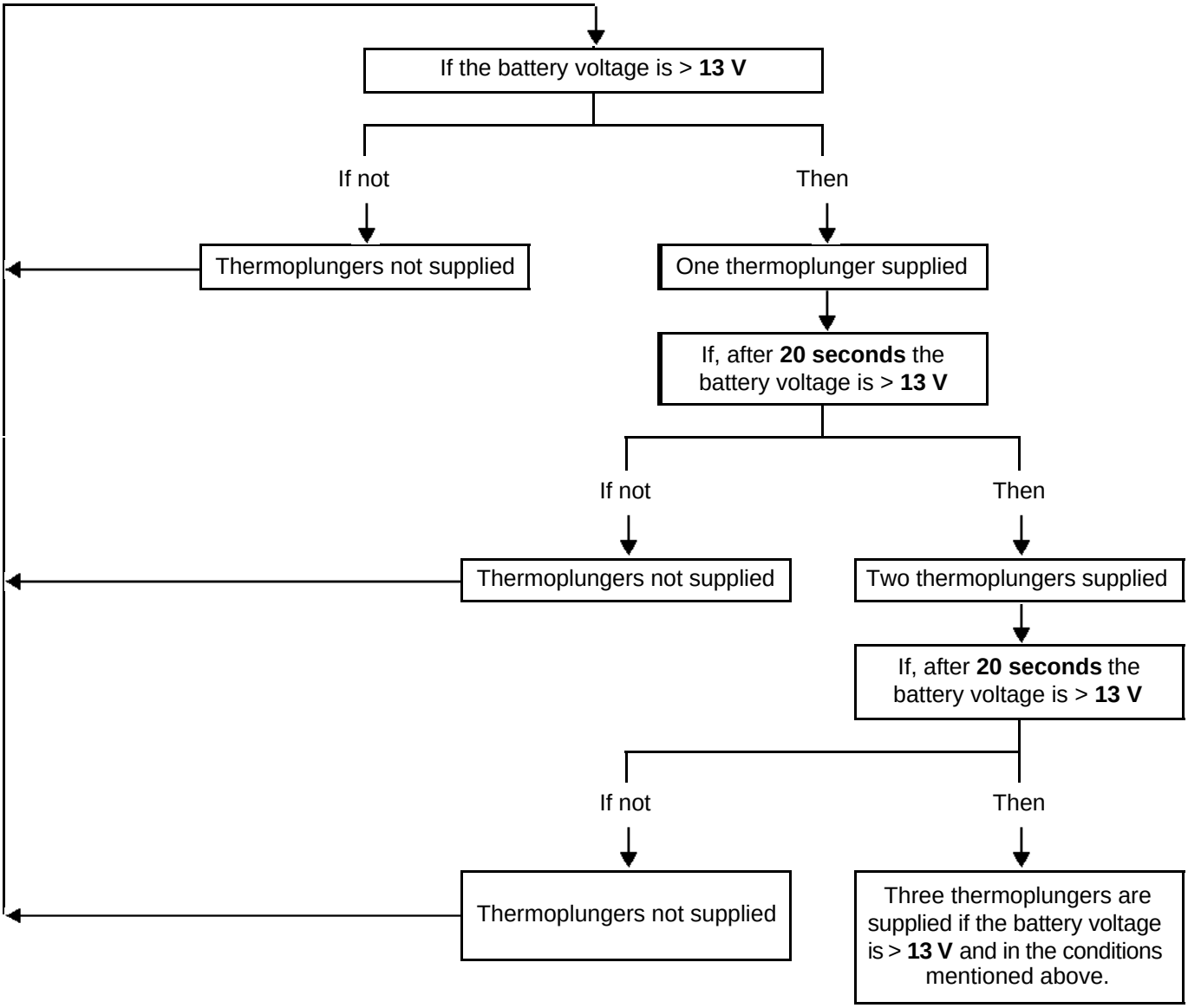

GETtheMANUALS.org

TURBOCHARGING PRESSURE REGULATION

The turbocharging pressure is adjusted via the position of the pressure regulation valve (wastegate).

PRINCIPLE

This pressure adjustment valve is linked via a rod to the wastegate diaphragm and is controlled by the injection computer via a solenoid valve. This solenoid valve is open in the rest position and is fitted to the inlet pipe between the air filter and turbocharger inlet.

In the rest position, (open), this solenoid valve links the turbocharger outlet (turbocharging pressure) and the pressure regulation valve control diaphragm.
The turbocharging pressure affects the diaphragm directly, the pressure regulation valve (wastegate) opens and the maximum possible pressure is between **1350 mbar - 1400 mbar** whatever the engine speed (minimum turbocharging for the engine).

When the solenoid valve is controlled, the turbocharging pressure signal (taken at the turbocharger outlet) is diverted to the compressor inlet. As a result, the diaphragm is not subject to turbocharging pressure, the pressure regulation valve (wastegate) closes back to a position imposed by the adjustment system.

In addition to turbocharging pressure management, the computer controls the engine for full load iso-torque operation.

This means that whatever the engine conditions (air temperature, atmospheric pressure etc) the maximum torque will always be **250 Nm** and the power **120 kW**. So for an air temperature of **20 °C**, the full load turbocharging pressure will be less than at **50 °C**. Except for controlled torque management, the turbocharging pressure can never exceed **1800 mbar**.

TURBOCHARGING PRESSURE REGULATION

The turbocharging pressure therefore depends on the position of the turbocharging pressure solenoid valve which is controlled with an Opening Cycle Ratio.

The turbocharging pressure is adjusted if:
– the coolant temperature is above **- 30 °C**,
– the turbocharging pressure is above **1100 mbar**.

IMPORTANT:
The closed solenoid valve value is never equal to **0**. The minimum value read is approximately **1.13 %** and the maximum value is not **100 %**, it is **98.8 %**.

GETtheMANUALS.org

ADAPTIVE CORRECTION OF THE TURBOCHARGING PRESSURE

Under normal operating conditions, the turbocharging pressure regulation solenoid valve OCR varies between a high and low value so that the desired turbocharging pressure is obtained.

It is possible that during variations in the operation (clogging up of the pipes, the solenoid valve, etc.) that the value of the **Opening Cyclic Ratio** could become close to the highest or lowest values.

The adaptive correction on the solenoid valve **Opening Cyclic Ratio** of the turbocharging pressure of the regulation enables these slow variations to be corrected, by bringing the OCR back to a nominal average value.

This correction is only effective if:
– the engine speed is greater than **2000 rpm**;
– the manifold pressure is stable, with a gap of less than **22 mbar**,
– the turbocharging pressure is above **1350 mbar**.

TURBOCHARGING PRESSURE REGULATION SOLENOID VALVE OCR VALUE AND ITS ADAPTIVE CORRECTION

Opening Cyclic Ratio turbocharging pressure regulation solenoid valve	**1.13 % ≤ X ≤ 98.83 %**
Adaptive **Opening Cyclic Ratio** turbocharging pressure regulation solenoid valve	Min. limit: **- 30 %** Max. limit: **+ 30 %**

GETtheMANUALS.org

GENERAL INFORMATION

The cruise control or distance control: Can maintain a speed selected by the driver and can adapt vehicle speed to the speed of the vehicle in front in the case of distance control. This function can be deactivated at any moment by depressing the brake pedal or the clutch pedal, or by using one of the system buttons.

Speed limiter: allows the driver to set a speed limit. The accelerator pedal will not function above the set speed. The speed limit selected can be exceeded at any time by pressing the accelerator pedal beyond its point of resistance.

A warning light on the instrument panel informs the driver of the status of the cruise control-speed limiter with distance control:
– Green light: cruise control in operation.
– Amber light: speed limiter in operation.
– Indicator light flashing: the set speed cannot be maintained (e.g. going downhill).

To control these functions, the injection computer receives the following signals on the following tracks:
– **A C3:** Speed limiter On/Off
– **A A2:** Cruise control or distance control assistance On/Off
– **A D2:** Steering wheel switch supply
– **A D3:** Steering wheel switch signal
– **A E4:** Stop switch open input
– **A C4:** Clutch switch input (depending on version)
– **A G2:** Pedal potentiometer 1 feed
– **A F2:** Pedal potentiometer 2 feed
– **A H3:** Pedal potentiometer 1 earth
– **A F4:** Pedal potentiometer 2 earth
– **A H2:** Pedal potentiometer 1 signal
– **A F3:** Pedal potentiometer 2 signal
– **A A3:** CAN L multiplexing (passenger compartment)
– **A A4:** CAN H multiplexing (passenger compartment)
– **B K4:** CAN H multiplexing (engine)
– **B K3:** CAN L multiplexing (engine)

The following signals are received by the injection computer via the multiplex network:
– The vehicle speed (Anti-lock Braking System).
– Stop switch closed signal (ABS).
– Which gear is engaged (Automatic Gearbox)

The injection computer sends the following signals over the multiplex network:
– Cruise control or speed limit setting to the instrument panel,
– Warning light illumination (amber, green or flashing).
– Gear change signals from the gearbox (depending on version).

The injection computer receives:
- signals from the accelerator pedal
- brake switch signal
- clutch switch signal
- signals from the Start/Stop switch
- signals from the steering wheel switches
- signals from the ABS computer
- signals from the automatic transmission computer.

The injection computer controls the motorised throttle using these signals to maintain the speed set by the cruise control function and to adapt the vehicle speed to the vehicle in front in the case of distance control, and not to exceed the speed set by the speed limiter function.

GETtheMANUALS.org

GENERAL INFORMATION

The cruise control or distance control: Can maintain a speed selected by the driver and can adapt vehicle speed to the speed of the moving vehicle in front in the case of distance control. This function can be deactivated at any moment by depressing the brake pedal or by using one of the system buttons.

Speed limiter: allows the driver to set a speed limit. The accelerator pedal will not function above the set speed. The speed limit selected can be exceeded at any time by pressing the accelerator pedal beyond its point of resistance.

A warning light on the instrument panel informs the driver of the status of the cruise control-speed limiter with distance control:
– Green light: cruise control in operation.
– Amber light: speed limiter in operation.
– Indicator light flashing: the set speed cannot be maintained (e.g. going downhill).

To control these functions, the injection computer receives the following signals on the following tracks:
– **A 29:** Speed limiter On/Off
– **A 30:** Cruise control or distance control On/Off
– **A 54:** Steering wheel switch earth
– **A 55:** Steering wheel switch signal
– **A 11:** Stop switch open input
– **A 43:** Pedal potentiometer feed 1
– **A 24:** Pedal potentiometer feed 2
– **A 37:** Pedal potentiometer earth 1
– **A 40:** Pedal potentiometer earth 2
– **A 38:** Pedal potentiometer signal 1
– **A 39:** Pedal potentiometer signal 2
– **A 13:** CAN L multiplexing (passenger compartment)
– **A 12:** CAN H multiplexing (passenger compartment)
– **A 32:** CAN L multiplexing (Engine)
– **A 31:** CAN H multiplexing (Engine)

The following signals are received by the injection computer via the multiplex network:
– The vehicle speed (Anti-lock Braking System)
– Stop switch closed signal (ABS)
– Which gear is engaged (automatic transmission)

The injection computer sends the following signals over the multiplex network:
– Cruise control or speed limit setting to the instrument panel
– Warning light illumination (amber, green or flashing)
– Gear change signals from the gearbox (depending on version).

The injection computer receives:
- signals from the accelerator pedal
- brake switch signal
- signals from the Start/Stop switch
- signals from the steering wheel switches
- signals from the ABS computer
- signals from the automatic transmission computer.

The injection computer controls the motorised throttle body using these signals to maintain the speed set by the cruise control function and to adapt the vehicle speed to the vehicle in front in the case of distance control, and not to exceed the speed set by the speed limiter function.

GETtheMANUALS.org

CRUISE CONTROL OPERATION

Entry conditions
- switch on cruise control
- internal gearbox ratio above **2nd gear**
- minimum vehicle speed **18 mph (30 km/h)**, maximum **120 mph (200 km/h)** (for information purposes)
- cruise control warning light on (green)
- press "+", "-" or "resume"

Exit conditions
- press down on the accelerator pedal (temporary exit)
- brake or clutch pedal must be depressed
- press "0"
- switch on "Off"
- electronic stability program system must be switched on

DISTANCE CONTROL OPERATION

Entry conditions
- switch on distance control
- minimum vehicle speed **31 mph (50 km/h)**, maximum **111 mph (180 km/h)** (for information purposes)
- cruise control warning light on (green)
- press "+", "-" or "resume"

Exit conditions
- press down on the accelerator pedal (temporary exit)
- depress the brake pedal,
- press "0"
- switch on "Off"
- electronic stability program system must be switched on
- vehicle speed less than **18 mph (30 km/h)**

SPEED LIMITER OPERATION

Entry conditions
- switch on speed limiter
- internal gearbox ratio above **2nd gear**
- minimum vehicle speed **18 mph (30 km/h)**, maximum **120 mph (200 km/h)** (for information purposes)
- limiter warning light on (amber)
- press "+", "-" or "resume"

Exit conditions
- brief sharp pressure on the accelerator pedal (past the point of resistance).
- extended pressure on the brake pedal
- press "0"
- switch on "Off"
- electronic stability program system must be switched on

NOTE:
A flashing warning light informs the driver that the set speed cannot be maintained.

Defect mode

When there is a breakdown or fault on:

The Electronic Stability Program system, the injection system, the ABS system.

The cruise control/speed limiter and cruise control with distance control can no longer be activated.

GETtheMANUALS.org

This vehicle is fitted with the **OBD (On Board Diagnostic)** fault finding system which has the following features:

When a fault causing excessive pollution is detected, a warning light on the instrument panel ("OBD" warning light) lights up. This warning light informs the driver that he must have the vehicle repaired.

This new computer diagnostic strategy operates as follows:

Only engine misfires are the subject of continuous fault finding. The other emission control components are tested once while driving (fault finding is not continuous). However, these test sequences are not always performed. The vehicle must drive under certain conditions for fault finding to be performed:
– temperature condition,
– speed condition (threshold, stability, etc.),
– delay after start,
– engine conditions (manifold pressure, engine speed, throttle angle, etc.).

The OBD management program supplements the management of conventional electrical failures. To meet this standard the requirements are:
– the OBD light coming on (or flashing for some faults),
– storing OBD faults.

CONSEQUENCES FOR FAULT FINDING AND REPAIRS

Special care is required when working on the car to prevent the OBD warning light from coming on after the car has been returned to the customer.

Some faults only appear when the car is being driven, when the adaptives are programmed: **it is therefore essential to validate the repair**.

In addition, the complexity of the system means that the customer has to be asked about the conditions which led to the illumination of the warning light. This information will enable faults to be found more quickly. The circumstances in which the fault occurred are recorded the computer's memory.

NOTE:
all electrical faults which result in exceeding the pollution limit cause the OBD warning light to come on.

The operational fault finding used for OBD is:
– diagnostics of misfires which destroy the catalytic converter,
– diagnostics of polluting misfires,
– fault finding for the upstream and downstream oxygen sensors,
– fault finding for the catalytic converter.

NOTE:
Misfire fault finding takes precedence over all other fault finding. This is performed almost continuously as soon as the driving conditions are reached.

IMPORTANT:
It is essential that the ignition is not switched off before the result is read on the diagnostic tool at the end of each test. Switching off the ignition causes incorrect interpretation of the results and loss of the information that the diagnostics have been performed.

GETtheMANUALS.org

CONDITIONS WHICH CAUSE ILLUMINATION OF "ON BOARD DIAGNOSTIC" WARNING LIGHT

● ELECTRICAL FAULT
Permanent illumination of the light after a fault is detected (depending on the component).

● **PERCENTAGE OF MISFIRES WHICH WILL DESTROY THE CATALYTIC CONVERTER**
Immediate illumination and flashing of the warning light.

● **CATALYTIC CONVERTER, OXYGEN SENSOR FAULT, MISFIRES**
Continuous illumination of the light after a fault is detected three times consecutively.

IMPORTANT:
Fault finding of the catalytic converter and the upstream oxygen sensor is sequential and takes place:
– once when driving (it lasts for several seconds per test),
– only under certain specific driving conditions.

During a road test, it may be the case that diagnostics for certain functions are not performed (e.g. when in a traffic jam).

⇒**Illumination of the light**
If the same **On Board Diagnostic** fault is detected during three consecutive driving periods or electrical fault.

⇒**The light flashes**
If misfires leading to destruction of the catalytic converter are detected.

⇒**The light goes out**
If the **On Board Diagnostic** fault does not reappear during three consecutive driving periods, the indicator light goes out (but the fault remains stored in the injection computer memory).
The fault must not be detected during **40 consecutive tests** for the fault to be cleared from the computer memory without the use of a diagnostic tool.

NOTE:
The fault may not be detected:
– if the fault is temporary,
– due to the way the customer drives, which does not include all of the fault detection conditions.

GETtheMANUALS.org

FAULT FINDING CONDITIONS

If, when the ignition is switched on and when the car is being driven, the air temperature read by the temperature sensor is not between **-7.5 °C and 119 °C**, or if the coolant temperature read by the sensor is not between **- 7.5 °C and 119 °C**, or if the difference between **1046 mbar** and the manifold pressure is more than **273 mbar** (altitude of about **2500 m**), then the **On Board Diagnostic** procedures are not authorised until the next time the ignition is switched on.

In order for the **On Board Diagnostic** system to function correctly, there must be no electrical faults in the injection system, even if the **On Board Diagnostic** warning light is not on.

When the catalytic converter and oxygen sensor fault finding procedures are in progress, the fuel vapour absorber bleed is closed and the richness adaptions are locked at their last value.

TEST PROCEDURE

– repair all electrical faults,
– erase all faults,
– program the injection,
– check the **On Board Diagnostic** system

FULL OBD INITIALISATION

– erase stored faults,
– erase **On Board Diagnostic** faults,
– erase programming.

PROGRAMMING REQUIRED FOR OBD FAULT FINDING

Engine target programming
This is programmed by:
– One deceleration with injection cut-off in **3rd gear** between **3500** and **3000 rpm** for at least **2 seconds**.
– A second deceleration with injection cut-off in **3rd gear** between **1800** and **1400 rpm** for at least **3 seconds**.
It is possible to carry out this programming procedure by decelerating from **3500 rpm** to **1400 rpm**.

Richness adaptives programming
The car must be driven while complying with the conditions specified in the **Injection: Adaptive mixture adjustment** section, for this programming to be carried out.

Torque/gas programming (State: Cylinder 1 detection):
To carry out this programming, the vehicle must be driven for **25 minutes**. Confirmation of the programming can be displayed on the diagnostic tool: **Target programming.....ACTIVE**.

GETtheMANUALS.org

The aim of detecting misfires is to detect a problem which would cause the **On Board Diagnostic** limit to be exceeded by **HC** pollutant emissions and which would damage the catalytic converter.

The diagnostic can detect:
– clogging or flooding of a spark plug,
– clogging of the injectors or an injector flow fault,
– a fault in the supply system (pressure regulator, fuel pump, etc.),
– a bad connection in the petrol or injection circuits (coil secondary, etc.).

Fault finding is performed by measuring the instantaneous variations in engine rotation speed.

Observation of a drop in torque detects misfires.

This fault finding is performed almost continuously while the car is being driven. If it is in operation, or if a fault is detected, other **On Board Diagnostic** diagnostics will be inhibited (catalytic converter and upstream oxygen sensor).

This fault finding strategy makes it possible to distinguish two types of fault:
– destructive misfires resulting in destruction of the catalytic converter. These cause the **OBD** warning light to come on immediately and flash,
– Polluting misfires which cause the On Board Diagnostic pollution limit to be exceeded. These cause the **OBD** warning light to come on if they are detected during three consecutive journeys.

DETECTION CONDITIONS

Before starting, the programming must be checked. The conditions prior to switching on the ignition and the current conditions must also be satisfied.

Destructive misfires are detected as soon as the coolant temperature exceeds -**7.5 °C**, over the three operating ranges between **idle speed** and **4500 rpm**.

The polluting combustion misfire test can also be carried out by maintaining the engine at idle speed with all the power consumers on for **10 minutes and 40 seconds**.

IMPORTANT:
It is essential that the ignition is not switched off before the result is read on the diagnostic tool at the end of this test. Switching off the ignition will lead to the results being misinterpreted.

CONFIRMATION OF THE REPAIR

– Misfiring being diagnosed . . . . . ACTIVE
– Polluting misfiring . . . . . No fault detected
– Destructive misfiring . . . . . No fault detected

If, after the test, the diagnostic tool has detected misfiring, refer to the fault finding procedure associated with this complaint.

GETtheMANUALS.org

The aim of catalytic converter fault finding is to detect a problem which would cause the **On Board Diagnostic** limit to be exceeded by **HC** pollutant emissions.

The ability of the catalytic converter to store oxygen indicates its condition. As the catalytic converter ages, its ability to store oxygen reduces along with its ability to treat pollutant gases.

CONDITIONS FOR STARTING FAULT FINDING

Fault finding of the catalytic converter can only take place after the **engine has been running** for **16 minutes and 30 seconds**, if all the conditions prior to switching on the ignition are satisfied and maintained:
– no electrical faults,
– no misfires detected,
– no catalytic converter fault finding performed since the ignition was switched on,
– programming done,
– main loop and double loop active,
– coolant temperature above **75 ºC**,
– car speed between **40 mph (63 kph)** and **81 mph (130 kph)**,
– pressure between **440** and **670 mbar**,
– engine speed read on the diagnostic tool is between **1472** and **3840 rpm**.

FAULT DETECTION

Fault finding is performed over a stabilised range in 5th gear at **43 mph (70 km/h)**. When the conditions for starting fault finding are satisfied, richness excitation peaks are applied, which has the effect of sending bursts of oxygen into the catalytic converter. If the catalytic converter is in good condition, it will absorb the oxygen and the downstream oxygen sensor value will remain at its average value. If it is worn, it will reject the oxygen and the oxygen sensor will start to vibrate. The voltage of the oxygen sensor will fluctuate. (The **On Board Diagnostic** warning light will light up after three journeys.)

The test cannot exceed **52 seconds** without exiting from the cycle again.

IMPORTANT:
It is essential that the ignition is not switched off before the result is read on the diagnostic tool at the end of this test. Switching off the ignition will lead to the results being misinterpreted.

CONFIRMATION OF THE REPAIR

– "On Board Diagnostic catalytic converter fault finding in progress" message .... ACTIVE
– "On Board Diagnostic catalytic converter fault finding: carried out" ..... ACTIVE
– "Catalytic converter operating fault" ..... INACTIVE
– "Confirmation of catalytic converter repair" ..... OK

If the diagnostic tool shows "Fault finding **On Board Diagnostic** catalytic converter: carried out ACTIVE" or "Confirmation of the repair to the catalytic converter... 1.DEF", the control cycle has not been performed correctly. In this case, repeat the cycle ensuring that the detection conditions are complied with.

If after the test, the diagnostic fault shows "Catalytic converter functional fault ... ACTIVE" or "Validation of catalytic converter repair ... 2DEF", refer to the fault finding method associated with this symptom.

GETtheMANUALS.org

The aim of oxygen sensor fault finding is to detect a problem which would cause the **On Board Diagnostic** limit to be exceeded by **HC, CO or NOx** pollutant emissions. It is carried out by measuring and comparing periods of upstream oxygen sensor vibration.

There are two types of possible faults of the upstream oxygen sensor:

– mechanical damage to an electrical component (breakage, cut in wire) which leads to an electrical fault,

– chemical damage to the component which causes the response time of the sensor to slow down, thus increasing its switching period.

When the required test conditions are met, the average of the sensor periods read is taken, subtracting the effects of interference, then compared with an average period of the **On Board Diagnostic** threshold.

TEST CONDITIONS

The fault finding procedure for the upstream oxygen sensor can only be carried out after **the engine has been running for 13 minutes and 40 seconds**, if the preliminary conditions on switching on the ignition are met and maintained:
– no electrical faults detected,
– programming done,
– no oxygen sensor fault finding performed since the ignition was switched on,
– no misfires detected,
– coolant temperature above **75 ºC**,
– average engine speed between **1440** and **3840 rpm**,
– pressure between **292** and **850 mbar**,
– vehicle speed between **40** mph and **81 mph (63 and 130 km/h)**.

FAULT DETECTION

Fault finding takes place during use by the customer, according to conditions previously described. The computer shows "oxygen sensor fault finding: in progress".

IMPORTANT:
It is essential that the ignition is not switched off before the result is read on the diagnostic tool at the end of this test. Switching off the ignition will lead to the results being misinterpreted.

CONFIRMATION OF THE REPAIR

– Have **On Board Diagnostic** oxygen sensor fault finding instruction in progress . . . . . ACTIVE
– **On Board Diagnostic** oxygen sensor fault finding: carried out . . . . . ACTIVE
– "Oxygen sensor operating fault" . . . . . INACTIVE
– "Validation of oxygen sensor repair" . . . . . OK

If the diagnostic tool shows "**On Board Diagnostic** oxygen sensor: not done ... ACTIVE" or "Validation of the repair to the oxygen sensor ... 1DEF", the control cycle has not been performed correctly. In this case, repeat the cycle ensuring that the detection conditions are complied with.

If after the test, the diagnostic tool shows "Oxygen sensor operating fault ... ACTIVE" or "Validation of repair ... 2.DEF", refer to the fault finding method associated with this symptom.

GETtheMANUALS.org

This vehicle is fitted with the **OBD** (**O**n **B**oard **D**iagnostic) fault finding system which has the following features:

When a fault causing excessive pollution is detected, a warning light on the instrument panel (**OBD** warning light) lights up. This warning light informs the driver that he must have the vehicle repaired.

This new computer diagnostic strategy operates as follows:

Only the fault finding procedures for misfires and the fuel supply circuit are carried out continuously. The other emission control components are tested once while driving (fault finding is not continuous). However, these test sequences are not always performed. The car must be driven under certain conditions for the test sequences to be executed:
– temperature condition,
– speed condition (threshold, stability, etc.),
– delay after starting,
– engine conditions (manifold pressure, engine speed, throttle angle, etc.).

The **OBD** (**O**n **B**oard **D**iagnostic) is managed alongside standard electrical faults. To meet this standard the requirements are:
– to light up the **OBD** (**O**n **B**oard **D**iagnostic) warning light (or cause it to flash in the case of some faults),
– stores **OBD** (**O**n **B**oard **D**iagnostic) faults.

CONSEQUENCES FOR FAULT FINDING AND REPAIRS

Special care is required when working on the vehicle to prevent the **OBD** (**O**n **B**oard **D**iagnostic) warning light from coming on after the vehicle has been returned to the customer..

Some faults only appear when the car is being driven, when the adaptives are programmed: **it is therefore essential to validate the repair**.

In addition, the complexity of the system means that the customer has to be asked about the conditions which led to the illumination of the warning light. This information will enable faults to be found more quickly. The circumstances in which the fault occurred are recorded the computer's memory.

NOTE:
All electrical faults that lead to pollution levels being exceeded cause the **OBD** (**O**n **B**oard **D**iagnostic) warning light to light up.

The functional fault finding operations used for the OBD (On Board Diagnostic) are:
– diagnostics of misfires which destroy the catalytic converter,
– diagnostics of polluting misfires,
– fault finding for the upstream and downstream oxygen sensors,
– diagnostics of the catalytic converter,
– fuel supply system fault finding

NOTE:
Misfire fault finding takes precedence over all other fault finding. This is performed almost continuously as soon as the driving conditions are reached.

IMPORTANT:
It is essential that the ignition is not switched off before the result is read on the diagnostic tool at the end of each test. Switching off the ignition causes incorrect interpretation of the results and loss of the information that the diagnostics have been performed.

GETtheMANUALS.org

CONDITIONS WHICH CAUSE ILLUMINATION OF "ON BOARD DIAGNOSTIC" WARNING LIGHT

- **ELECTRICAL FAULT**
  Permanent illumination of the light after several consecutive detections of a fault (one to two depending on the component).

- **PERCENTAGE OF MISFIRES WHICH WILL DESTROY THE CATALYTIC CONVERTER**
  Immediate illumination and flashing of the warning light.

- **CATALYTIC CONVERTER, OXYGEN SENSOR, MISFIRES AND FUEL SUPPLY CIRCUIT FAULTS**
  Illumination of the light after a fault is detected twice consecutively.

IMPORTANT:
Fault finding of the catalytic converter and the upstream oxygen sensor is sequential and takes place:
– once when driving (it lasts for several seconds per test),
– only under certain specific driving conditions.

During a road test, it may be the case that diagnostics for certain functions are not performed (e.g. when in a traffic jam).

⇒Illumination of the light
If the same **On Board Diagnostic** fault is detected during two consecutive driving periods or electrical fault.

⇒The light flashes
If misfires leading to destruction of the catalytic converter are detected.

⇒The light goes out
If the **On Board Diagnostic** fault does not reappear during two consecutive driving periods, the indicator light goes out (but the fault remains stored in the injection computer memory).
The fault must not be detected during **40 consecutive tests** for the fault to be cleared from the computer memory without the use of a diagnostic tool.

NOTE:
The fault may not be detected:
– if the fault is temporary,
– due to the way the customer drives, which does not include all of the fault detection conditions.

GETtheMANUALS.org

DIAGNOSTIC CONDITIONS

In order for the **OBD** (On Board Diagnostic), system to function correctly, there must be no electrical faults in the injection system, even if the **OBD** warning light is not on.

When the catalytic converter and oxygen sensor fault finding procedures are in progress, the fuel vapour absorber bleed is closed and the richness adaptions are locked at their last value.

TEST PROCEDURE

- repair all electrical faults,
- erase all faults,
- program the injection,
- check the OBD diagnostic system.

FULL OBD INITIALISATION

– erase stored faults,
– erase OBD faults,
– erase programming.

PROGRAMMING REQUIRED FOR OBD FAULT FINDING

Engine target programming
Engine target programming takes place automatically and cannot be carried out with the diagnostic tool.

Richness adjustment programming
To carry out this programming, refer to **the Petrol injection: adaptive richness correction section**.

GETtheMANUALS.org

The aim of detecting misfires is to detect a problem which would cause the **OBD** (On Board Diagnostic) limit to be exceeded by pollutant emissions and which would damage the catalytic converter.

The diagnostic can detect:
- clogging or flooding of a spark plug,
- clogging of the injectors or an injector flow fault,
- a fault in the supply system (pressure regulator, fuel pump, etc.),
- a bad connection in the petrol or injection circuits,
- a malfunction of the ignition coils.

Fault finding is carried out by measuring instantaneous variations in engine speed.
Observation of a drop in torque detects misfires.
This fault finding is performed almost continuously while the car is being driven.

This diagnostic strategy makes it possible to diagnose two types of fault:
– destructive misfires resulting in destruction of the catalytic converter. These cause the OBD warning light to light up immediately and flash,
– Polluting misfires which cause the On Board Diagnostic pollution limit to be exceeded. These cause the OBD warning light to come on if they are detected during two consecutive journeys.

IMPORTANT:
It is essential that the ignition is not switched off before the result is read on the diagnostic tool at the end of this test. Switching off the ignition will lead to the results being misinterpreted.

CONFIRMATION OF THE REPAIR

– DETECTION OF ENGINE MISFIRES	No fault detected
– CYLINDER MISFIRES 1, 2, 3, 4, 5 or 6	No fault detected

If after the test the diagnostic tool has found misfires, refer to the fault finding method associated to this symptom.

GETtheMANUALS.org

The aim of catalytic converter fault finding is to detect a malfunction which would cause pollutant emissions to exceed the **On Board Diagnostic** limit.

The ability of the catalytic converter to store oxygen indicates its condition. As the catalytic converter ages, its ability to store oxygen reduces along with its ability to treat pollutant gases.

CONDITIONS FOR STARTING FAULT FINDING

Catalytic converter fault finding can only be carried out if the conditions required prior to switching on the ignition are met and maintained:
– no electrical faults,
– no misfires detected,
– programming done,
– main loop and double loops active,
– engine speed read on the diagnostic tool is between **1000** and **2600 rpm**.
– coolant temperature between **70˚** and **100 ˚C**,
– vehicle speed greater than **20 mph (32 km/h)**.

FAULT DETECTION

Fault finding is carried out at a steady speed at between **15 % and 40 %** load and an engine speed between **1000 and 2600 rpm**. When the conditions for starting fault finding are satisfied, richness excitation peaks are applied, having the effect of sending bursts of oxygen into the catalytic converter. If the catalytic converter is in good condition, it will absorb the oxygen and the downstream oxygen sensor value will remain at its average value. If it is worn, it will reject the oxygen and the downstream oxygen sensor will start to vibrate. The voltage of the oxygen sensor will fluctuate. The On Board Diagnostic warning light will light up after two consecutive journeys.

Catalytic converter fault finding takes **60 seconds**.

IMPORTANT:
It is essential that the ignition is not switched off before the result is read on the diagnostic tool at the end of this test. Switching off the ignition will lead to the results being misinterpreted.

CONFIRMATION OF THE REPAIR

– On Board Diagnostic catalytic converter fault finding done	YES
– Catalytic converter no. 1 or 2	No fault detected

If the diagnostic tool shows "Fault finding" On Board Diagnostic catalytic converter: done" ... NO, then the control cycle has not been carried out correctly. In this case, repeat the cycle ensuring that the detection conditions are complied with.

If after the test, the diagnostic fault shows "CATALYTIC CONVERTER No. 1 or No. 2", refer to the fault finding method associated with this symptom.

GETtheMANUALS.org

The aim of the oxygen sensor fault finding is to detect a malfunction which would cause the **On Board Diagnostic** limit for hydrocarbon, carbon monoxide or nitrogen oxide pollutant emissions to be exceeded. It is carried out by measuring and comparing periods of upstream oxygen sensor vibration.

There are two types of possible faults of the upstream oxygen sensor:
– mechanical damage to an electrical component (breakage, cut in wire) which leads to an electrical fault,
– chemical damage to the component which causes the response time of the sensor to slow down, thus increasing its switching period.

When the required test conditions are met, the average of the sensor periods read is taken, subtracting the effects of interference, then compared with an average period of the On Board Diagnostic threshold.

TEST CONDITIONS

Upstream oxygen sensor fault finding can only be carried out if the conditions required prior to switching on the ignition are met and maintained:
– no electrical faults detected,
– no operational breakdown **On Board Diagnostic** (misfires, catalytic converter or fuel supply system) detected,
– programming done,
– coolant temperature between **70 °C and 100 °C**,
– average engine speed between **1200** and **3100 rpm.**
– engine load between **13 %** and **62 %**,
– car speed between **49.5 mph** (**80 km/h) and 75 mph (120 km/h)**,
– active closed loop richness regulation,
– battery voltage between **11** and **16 V**.

FAULT DETECTION

Fault finding takes place during use by the customer, under the conditions previously described. The computer shows "SENSOR FAULT FINDING COMPLETE".

IMPORTANT:
It is essential that the ignition is not switched off before the result is read on the diagnostic tool at the end of this test. Switching off the ignition will lead to the results being misinterpreted.

CONFIRMATION OF THE REPAIR

– SENSOR FAULT FINDING COMPLETE.	YES
– UPSTREAM OXYGEN SENSOR no. 1 or no. 2	No fault detected
– DOWNSTREAM OXYGEN SENSOR no. 1 or no. 2	No fault detected

If the diagnostic tool shows "OXYGEN SENSOR FAULT FINDING COMPLETE" ... NO, the control cycle has not been carried out correctly. In this case, repeat the cycle ensuring that the detection conditions are complied with.

If after the test, the diagnostic tool shows a "CATALYTIC CONVERTER No. 1 OR No. 2" fault or an "UPSTREAM OXYGEN SENSOR No. 1 OR No. 2" faults or "DOWNSTREAM OXYGEN SENSOR No. 1 or No. 2", refer to the fault finding method associated with this symptom.

GETtheMANUALS.org

This fault finding procedure continuously monitors the richness derivatives through the richness regulation adaptive values (programming).

TEST CONDITIONS

These conditions are fulfilled by a driving cycle that starts richness regulation of the upstream and downstream sensors.

The fault finding procedure can only be carried out if the preliminary conditions on ignition are met and maintained:
– no electrical faults detected,
– no **On Board Diagnostic** operational fault,
– coolant temperature between **70** and **100 °C**,
– coolant temperature at start higher than or equal to **-10 °C**,
– engine speed between **1000** and **3200 rpm**.
– engine load between **13** and **67 %**,
– car speed between **28** mph (**46 km/h) and 80 mph (130 km/h)**,
– battery voltage higher than or equal to **11 V**.

FAULT FINDING

Fault finding takes place during use by the customer, under the conditions previously described.

IMPORTANT:
It is essential that the ignition is not switched off before the results are read on the diagnostic tool at the end of this test. Switching off the ignition will lead to the results being misinterpreted.

CONFIRMATION OF THE REPAIR

– FUEL SUPPLY BANK A or B	No fault detected
– RICHNESS REGULATION BANK 1 or 2	No fault detected

If after the test, the fault finding procedure shows "FUEL SUPPLY BANK A or B" fault or "RICHNESS REGULATION BANK 1 or 2", refer to the fault finding method associated with this symptom.

GETtheMANUALS.org

ALLOCATION OF INJECTION COMPUTER INPUTS AND OUTPUTS

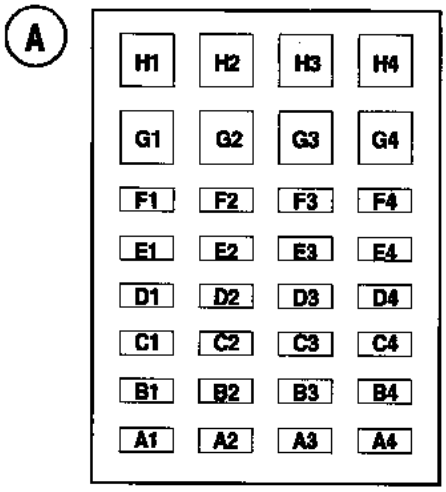

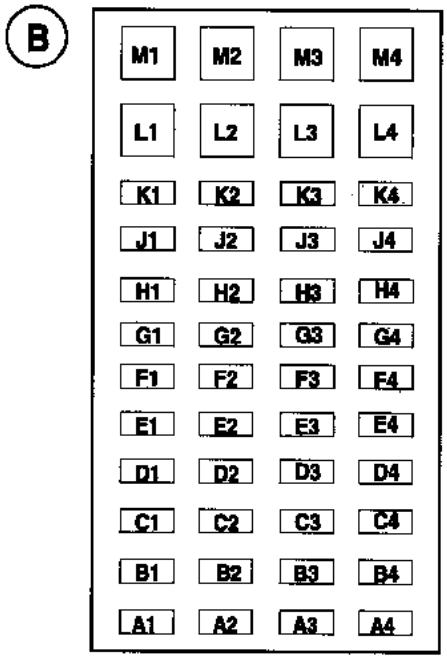

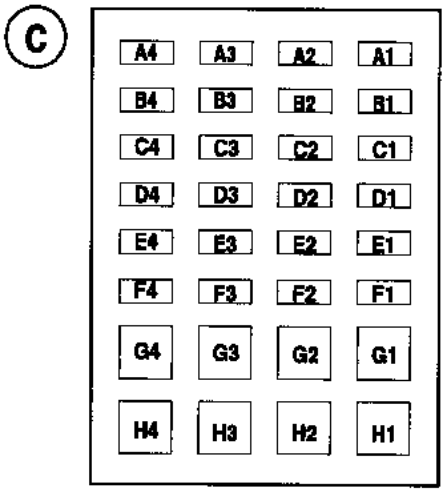

SE2009

CONNECTOR A (BLACK)

A2	←	Cruise control with distance check On/Off control
A3	→ ←	UCH CAN L MULTIPLEX CONNECTION
A4	→ ←	UCH CAN H MULTIPLEX CONNECTION
B4	→ ←	Fault finding
C3	←	Speed limiter On/Off switch
C4	←	Clutch signal
D2	---	Cruise control/speed limiter control supply
D3	←	Cruise control/speed limiter control sensor signal
E4	←	Brake signal
F2	---	Pedal potentiometer feed (track 2)
F3	←	Pedal potentiometer signal (track 2)
F4	---	Pedal potentiometer earth (track 2)
G2	---	Pedal potentiometer feed (track 1)
G4	---	Power earth
H2	←	Pedal potentiometer signal (track 1)
H3	---	Pedal potentiometer earth (track 1)
H4	---	Power earth

CONNECTOR B (BROWN)

A2	←	Pinking sensor signal
A4	---	+ after ignition
B2	---	Pinking sensor earth
C2	---	Pinking sensor screening
C4	←	Power assisted steering pressure switch signal
D3	←	Motorised throttle body potentiometer signal (track 2)
D4	→	Actuator (power latch) control relay
E1	---	Turbocharger pressure sensor earth
E2	←	Air temperature sensor signal
E3	---	Air temperature sensor earth
E4	←	Engine speed sensor signal
F1	←	Turbocharger pressure sensor signal
F2	←	Coolant temperature sensor signal
F3	←	Engine speed sensor signal
F4	---	Coolant temperature sensor earth
G1	---	Turbocharger pressure sensor supply
G2	---	Motorised throttle body potentiometer feed
G3	←	Motorised throttle body signal (track 1)
G4	---	Motorised throttle body potentiometers earth
H2	---	Manifold pressure sensor supply
H3	←	Manifold pressure sensor signal
H4	---	Manifold pressure sensor earth
J4	→	Additional heating control relay 2
K3	→ ←	Engine CAN L MULTIPLEX LINK (Automatic gearbox only)
K4	→ ←	Engine CAN H MULTIPLEX LINK (Automatic gearbox only)
L2	→	Injector 3 control
L3	→	Injector 2 control
L4	→	Injector 1 control
M1	---	Power earth
M2	→	Injector 4 control
M3	→	Motorised throttle body (-) control
M4	→	Motorised throttle body (+) control

GETtheMANUALS.org

ALLOCATION OF INJECTION COMPUTER INPUTS AND OUTPUTS

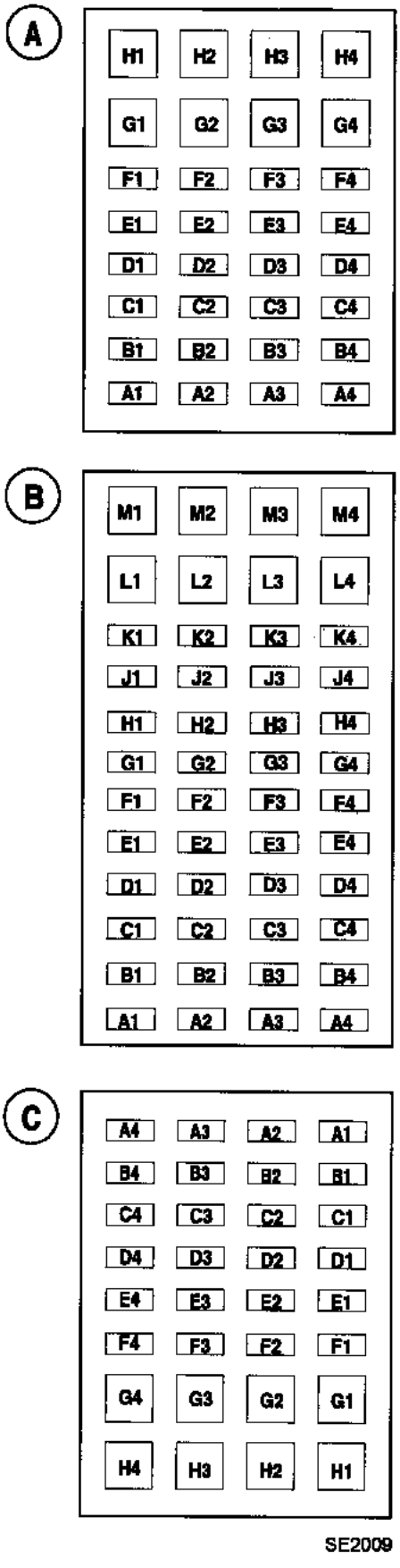

Connector C (grey)

A2	←	DOWNSTREAM oxygen sensor signal
B1	←	UPSTREAM oxygen sensor signal
B2	---	DOWNSTREAM oxygen sensor earth
C1	---	UPSTREAM oxygen sensor earth
C2	→	Turbocharger cooling coolant pump control relay
D1	→	Fuel pump control relay
D2	→	Additional heating control relay 1
D4	→	Turbocharging pressure regulation solenoid valve control,
E1	→	Fuel vapour absorber bleed solenoid valve control
F1	→	Low speed fan assembly control relay
F2	→	High speed fan assembly control relay
G1	→	UPSTREAM oxygen sensor heater control
G2	---	+ After relay supply
G3	→	DOWNSTREAM oxygen sensor heater control
H1	---	Power earth
H2	→	Cylinders 1 and 4 ignition coil control
H3	→	Cylinders 2 and 3 ignition coil control

GETtheMANUALS.org

Connector A

A1	---	Motorised throttle motor supply
A2	---	Earth
A3	---	Motorised throttle motor supply
A4	---	Earth
A5	---	Motorised throttle motor safety relay supply
A7	←	Variable air intake flap solenoid valve control
A9	---	+after ignition supply
A11	←	Brake switch signal
A12	→ ←	CAN HIGH multiplex link (passenger compartment)
A13	→ ←	CAN LOW multiplex link (passenger compartment)
A14	→ ←	Diagnostic line K
A15	---	Coolant temperature sensor earth
A16	←	Pinking sensor signal
A17	←	Inlet air temperature sensor signal
A18	←	Power assisted steering pressure sensor signal
A19	←	Motorised throttle potentiometer signal No. 2
A20	←	Motorised throttle potentiometer signal No. 1
A22	←	Atmospheric pressure sensor signal
A23	---	Motorised throttle potentiometers earth
A24	---	Accelerator pedal potentiometer supply track 2
A28	←	Engine speed signal
A29	←	Speed limiter On/Off signal
A30	←	Cruise control or distance control On/ Off signal
A31	→ ←	CAN HIGH multiplex link (Engine)
A32	→ ←	CAN LOW multiplex link (Engine)
A35	---	Pinking sensor earth
A36	←	Coolant temperature sensor signal
A37	---	Accelerator pedal potentiometer earth track No. 1
A38	←	Accelerator pedal potentiometer signal track No. 1
A39	←	Accelerator pedal potentiometer signal track No. 2
A40	---	Accelerator pedal potentiometer earth track No. 2
A43	---	Flowmeter, atmospheric pressure sensor, accelerator pedal potentiometer, power assisted steering pressure sensor and motorised throttle pressure sensor + 5 V supply
A44	→	Injection locking relay control
A45	→	High speed fan assembly relay control
A50	←	Camshaft sensor signal (rear bank)
A51	←	Camshaft sensor signal (front bank)
A52	---	Camshaft sensor earth (front bank)
A54	---	Steering wheel control earth (cruise control)
A55	←	Steering wheel control signal (cruise control)
A56	←	Air flowmeter signal
A57	←	Downstream oxygen sensor signal (front bank)
A58	←	Downstream oxygen sensor signal (rear bank)
A59	←	Upstream oxygen sensor signal (front bank)
A60	←	Upstream oxygen sensor signal (rear bank)
A62	---	Atmospheric pressure and power assisted steering pressure sensor earth
A63	→	Motorised throttle motor safety relay control
A64	→	Low speed fan relay control
A69	←	TDC sensor signal
A71	---	TDC sensor earth
A73	---	Camshaft sensor earth (rear bank)
A75	---	Air flowmeter earth and air temperature sensor
A76	---	Downstream oxygen sensor earth (front bank)
A77	---	Downstream oxygen sensor earth (rear bank)
A78	---	Upstream oxygen sensor earth (front bank)
A79	---	Upstream oxygen sensor earth (rear bank)

GETtheMANUALS.org

Connector B

B 84	→	Ignition coil no. 5 control
B 85	→	Ignition coil no. 6 control
B 89	→	Fuel vapour absorber bleed solenoid valve control
B 92	→	Ignition coil no. 1 control
B 93	→	Ignition coil no. 2 control
B 94	→	Ignition coil no. 3 control
B 95	→	Ignition coil no. 4 control
B 96	→	Fuel pump relay control
B 98	→	Injector No. 6 control
B 99	→	Injector No. 5 control
B 100	→	Injector No. 4 control
B 101	→	Downstream oxygen sensor heater control (front bank)
B 102	→	Downstream oxygen sensor heater control (rear bank)
B 103	→	Camshaft dephaser solenoid valve control (front bank),
B 104	→	Camshaft dephaser solenoid valve command (rear bank),
B 106	→	Injector No. 1 control
B 107	→	Injector No. 2 control
B 108	→	Injector No. 3 control
B 109	→	Upstream oxygen sensor heater control (front bank)
B 110	→	Upstream oxygen sensor heater control (rear bank)
B 113	---	Battery supply
B 115	---	Earth
B 116	---	Earth
B 117	---	+ 12 V supply after injection locking relay
B 118	---	Earth
B 119	---	+ 12 V supply after injection locking relay
B 120	---	+ 12 V return current after injection locking relay
B 121	---	Earth

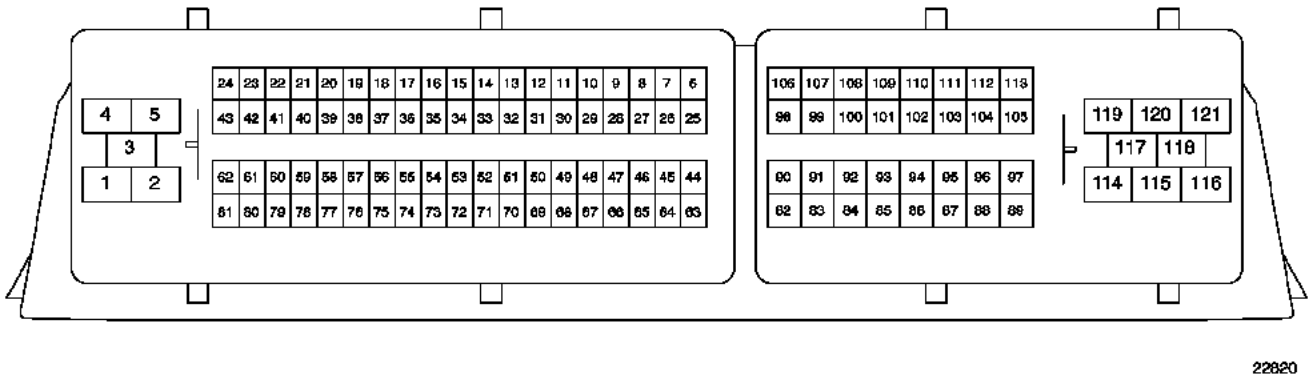

22820

GETtheMANUALS.org

VOLUME AND GRADE OF COOLANT

Engine	Volume (in litres)	Grade	Special notes
F4R	**6.8**	GLACEOL RX (type D) use coolant only	Protects down to **-20** °**C** ± **2** °**C** for temperate and very cold countries Protects down to **-37** °**C** ± **2** °**C** for cold countries
G9T	**7**		
P9X	**7**		
V4Y	**7.2**		

THERMOSTAT

Engine	Starts opening (in °C)	Finishes opening (in °C)
F4R	**89**	**99** ± **2**
G9T	**89**	**99** ± **2**
P9X	**82**	**92** ± **2**
V4Y	**82**	**92** ± **2**

GETtheMANUALS.org

Coolant flows continuously through the heater matrix, which contributes to the cooling of the engine.

FILLING

The following bleed screws must be opened:
– on the top of the radiator,
– on the heater hoses,
– on the hose between the coolant unit and the auxiliary heater (**G9T engine**),
– on the thermoplunger unit hose (**P9X engine**),
– on the coolant unit (**F4R and G9T engines**) at (A).

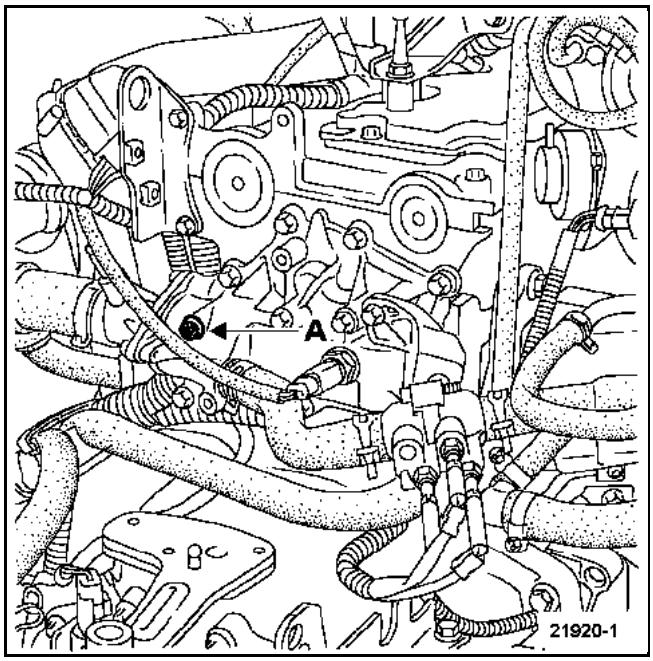

Fill the circuit through the expansion bottle opening.

Close the bleed screw as soon as the fluid runs out in a continuous jet.

Start the engine **(2 500 rpm)**.

Adjust the level by overflow for a period of about **4 minutes**.

Close the bottle.

BLEEDING

Let the engine run for about **20 minutes** at **2500 rpm**, until the fans start (time needed for automatic degassing).

Verify that the liquid level is at or near the **Maximum** mark.

DO NOT OPEN THE BLEED SCREW WHILST THE ENGINE IS RUNNING

REPLACE THE EXPANSION BOTTLE CAP WITH THE ENGINE WARM

GETtheMANUALS.org

SPECIAL TOOLING REQUIRED	
M.S. 554-01	Adapter for M.S. 554-07
M.S. 554-06	Adapter for M.S. 554-07
M.S. 554-07	Kit for testing cooling circuit sealing

1 - Testing the circuit tightness

Replace the expansion bottle valve with adapter **M.S. 554-01**.

Connect this to tool **M.S. 554-07**.

Warm up the engine then switch it off.

Pump to pressurise the circuit.

Stop pumping at **0.1 bar** less than the valve rating.

The pressure should not drop; if it does, look for the leak.

Slowly unscrew the union of tool **M.S. 554-07** to decompress the cooling circuit, then remove tool **M.S. 554-01** and refit the expansion bottle valve with a new seal.

2 - Checking the valve rating.

If liquid passes through the expansion bottle valve, the valve must be replaced.

Fit tool **M.S. 554-06** on pump **M.S. 554-07** and fit both onto the valve to be checked.

Increase the pressure, which should stabilise at the valve rating, with a test tolerance of **± 0.1 bar.**

Valve rating: 1.4 bar for F4R, G9T and V4Y engines, and 1.8 bar for P9X.

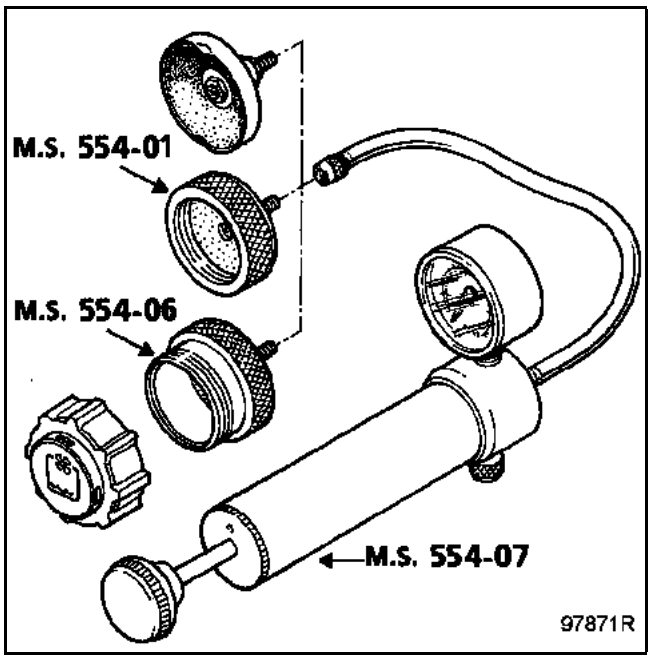

GETtheMANUALS.org

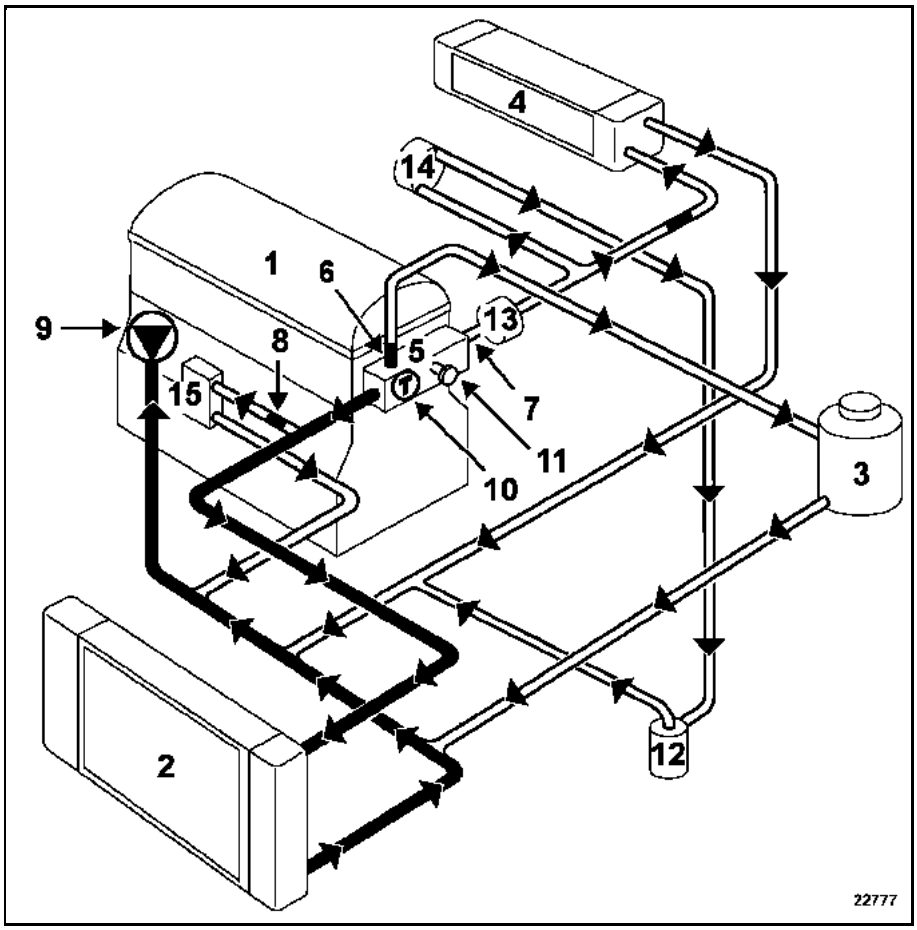

1 Engine
2 Radiator
3 Hot bottle with degassing after thermostat
4 Heater matrix
5 Thermostat mounting
6 Choke Ø **3 mm**
7 Choke Ø **9 mm**
8 Choke Ø **6 mm**
9 Coolant pump
10 Thermostat
11 Bleed screw
12 Electric coolant pump
13 Thermoplunger mounting (if fitted)
14 Turbocharger
15 Coolant/oil heat exchanger

The valve rating of the expansion bottle valve is **1.4 bar**.

GETtheMANUALS.org

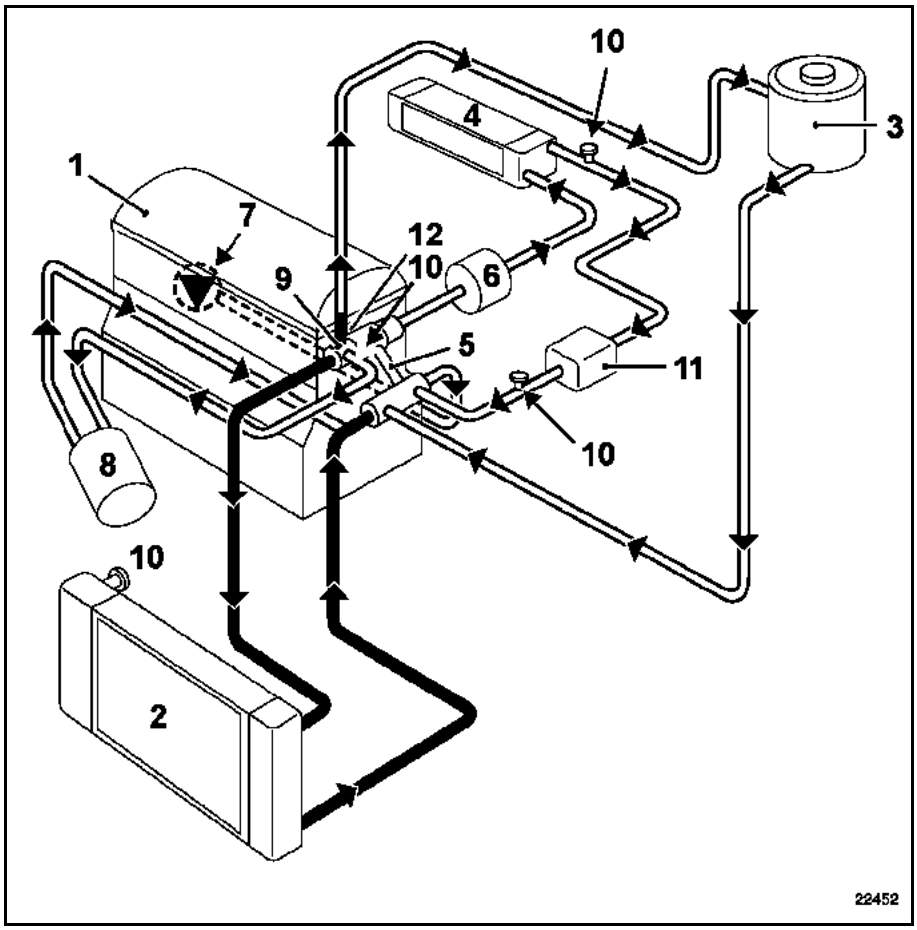

1 Engine
2 Radiator
3 Expansion bottle
4 Heater matrix
5 By-pass Ø **11 mm**
6 Thermoplunger support
7 Coolant pump
8 Coolant/oil heat exchanger
9 Thermostat
10 Bleed screw
11 Auxiliary heater (very cold country version only)
12 Choke Ø **3 mm**

The valve rating of the expansion bottle valve is **1.4 bar**.

GETtheMANUALS.org

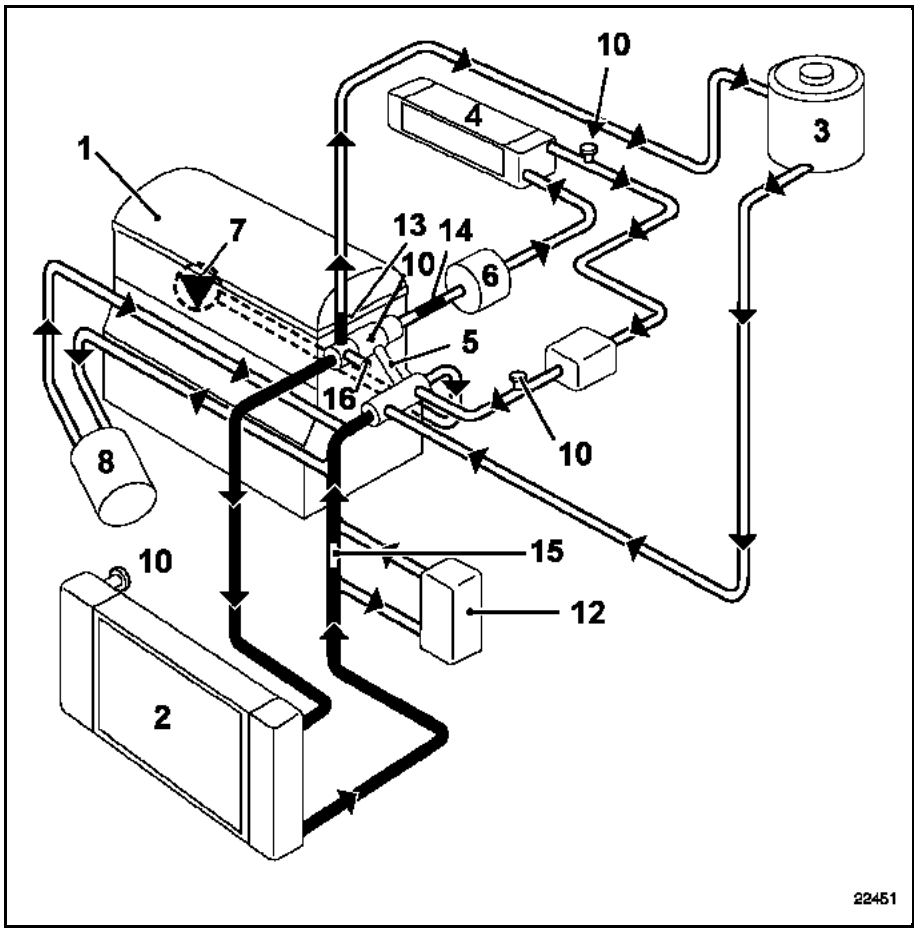

1 Engine
2 Radiator
3 Expansion bottle
4 Heater matrix
5 By-Pass Ø **11 mm**
6 Thermoplunger mounting
7 Coolant pump
8 Coolant/oil heat exchanger
9 Thermostat
10 Bleed screw
11 Auxiliary heater (very cold country version only)
12 Coolant/oil heat exchanger for automatic gearbox
13 Choke Ø **3 mm**
14 Choke Ø **8 mm**
15 Choke Ø **14 mm**
16 Plug

The valve rating of the expansion bottle valve is **1.4 bar**.

GETtheMANUALS.org

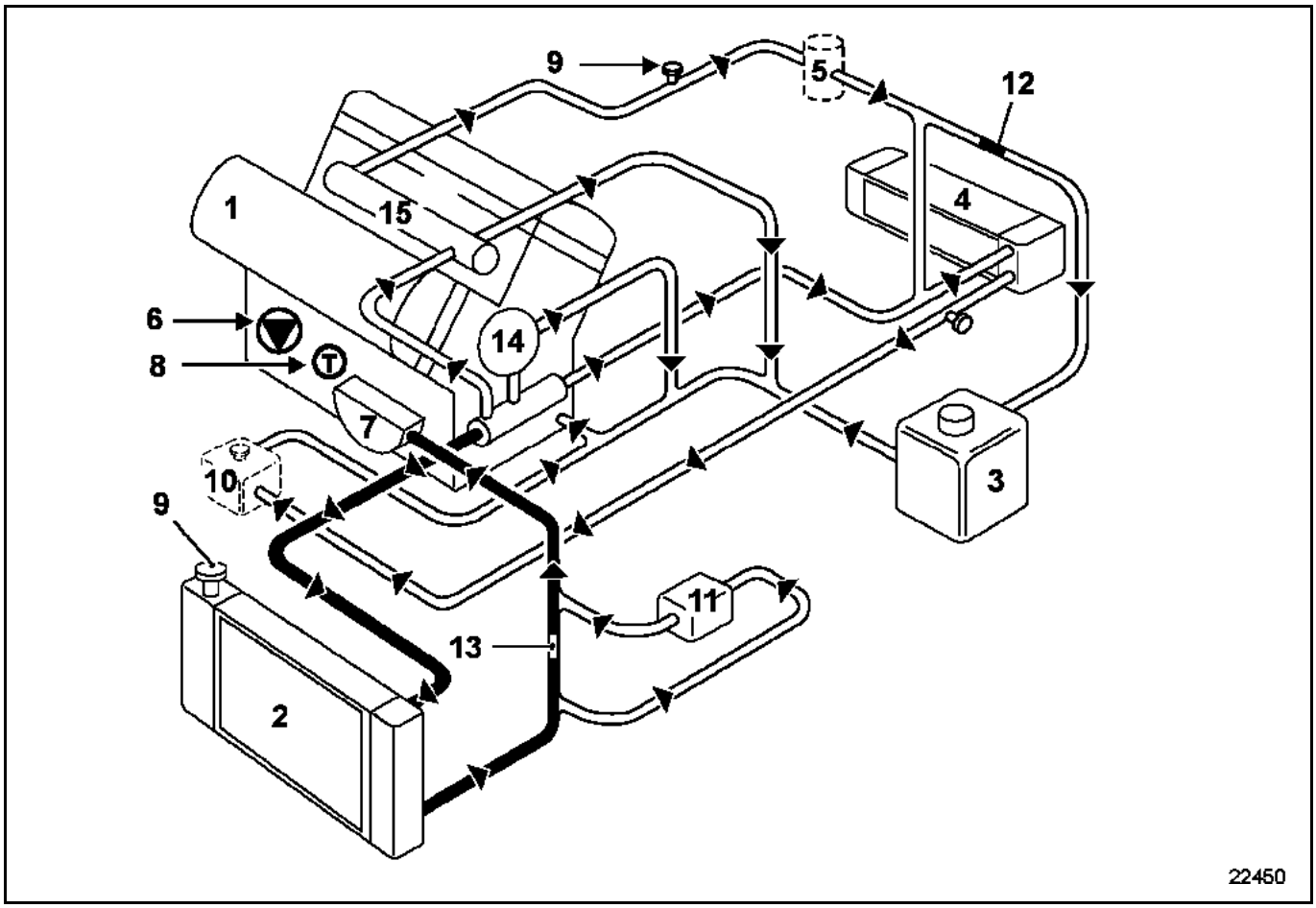

1 Engine
2 Radiator
3 Expansion bottle
4 Heater matrix
5 Thermoplunger mounting (Temperate countries version only)
6 Coolant pump
7 Coolant/oil heat exchanger
8 Thermostat
9 Bleed screw
10 Additional heater (cold country version only)
11 Coolant/oil heat exchanger for automatic gearbox
12 Choke Ø **3 mm** and length **10 mm**
13 Choke Ø **16 mm** and length **10 mm**
14 Turbocharger
15 EGR system

The valve rating of the expansion bottle valve is **1.8 bar**.

GETtheMANUALS.org

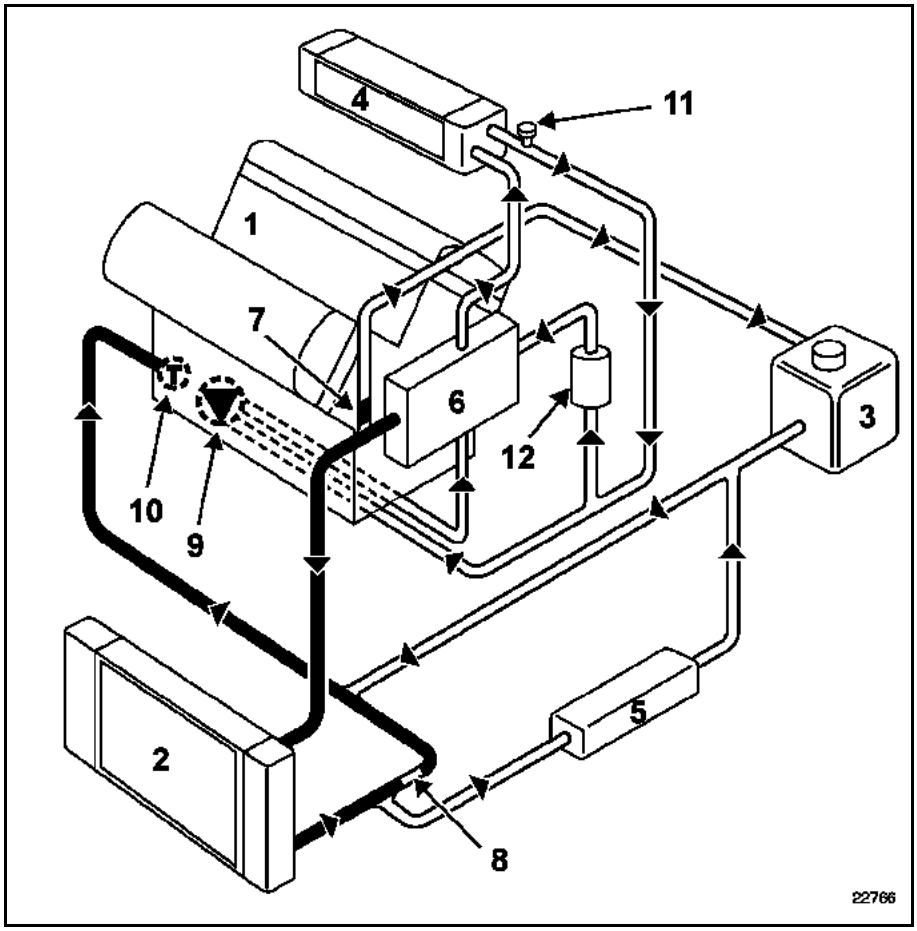

1 Engine
2 Radiator
3 "Hot" bottle with permanent degassing
4 Heater matrix
5 Automatic gearbox oil heat exchanger
6 Coolant outlet unit
7 Choke
8 Choke Ø **16 mm**
9 Coolant pump
10 Thermostat
11 Bleed screw
12 Air heater

The valve rating of the expansion bottle valve is **1.4 bar**.

GETtheMANUALS.org

TIGHTENING TORQUE (in daNm)	
Coolant unit mounting bolt	2.5

REMOVAL

Put the car on a two-post lift.

Disconnect the battery.

Remove the engine undertray.

Drain the cooling circuit through the bottom radiator hose.

Remove:
– thermostat mountings at (A),
– thermostat (B).

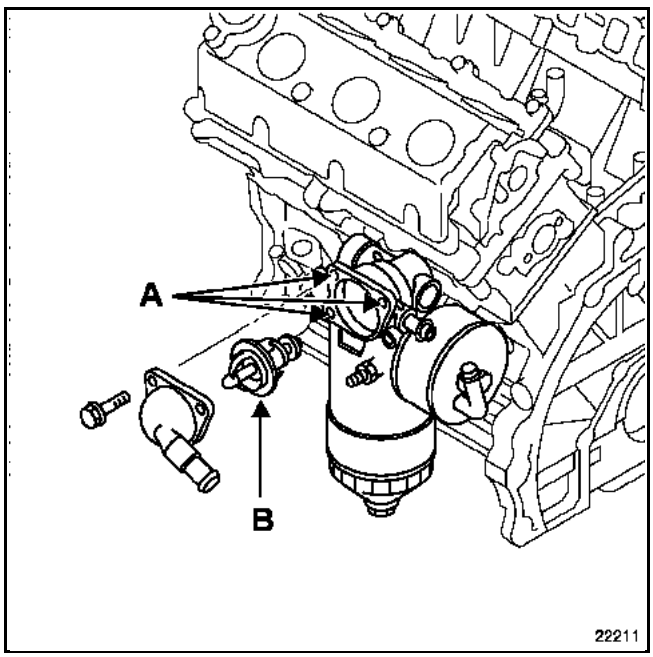

REFITTING

Refit the thermostat with a new seal in place.

NOTE: degassing aperture (C) must always be oriented facing vertically upwards.

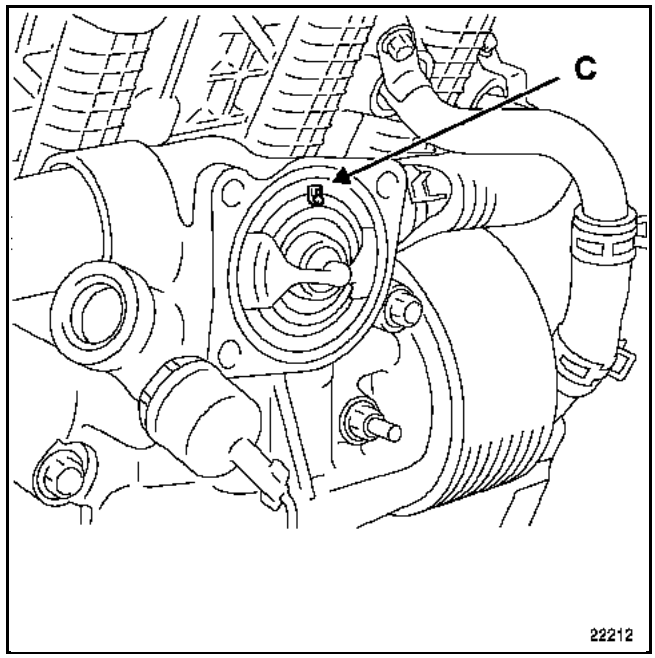

Tighten the coolant unit bolts to a torque of **2.5 daNm**.

Fill and bleed the cooling circuit (see Section **19A Filling - bleeding**).

GETtheMANUALS.org

SPECIAL TOOLING REQUIRED	
Mot. 1202-01 Mot. 1202-02	Hose clip pliers
Mot. 1448	Remote operation clip pliers for cooling system hose clips

REMOVAL

Put the car on a two-post lift.

Remove:
– the engine covers,
– the battery and the engine undertray,
– both front wheels,
– the upper impact bar,
– the air resonator (**V4Y only**) at (A),

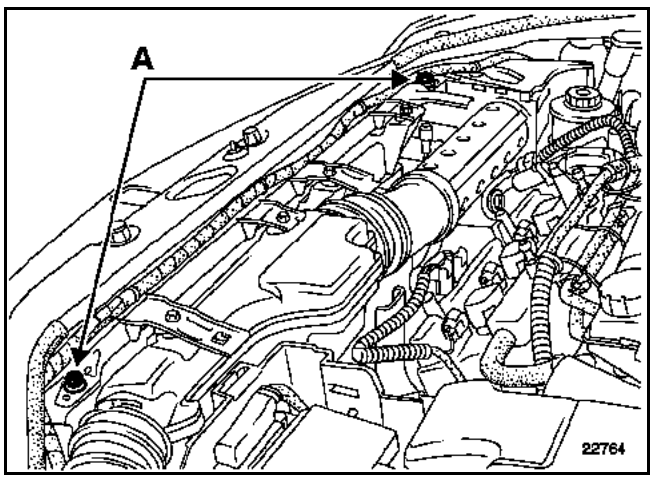

– the relay board at (1),
– the battery tray at (2),

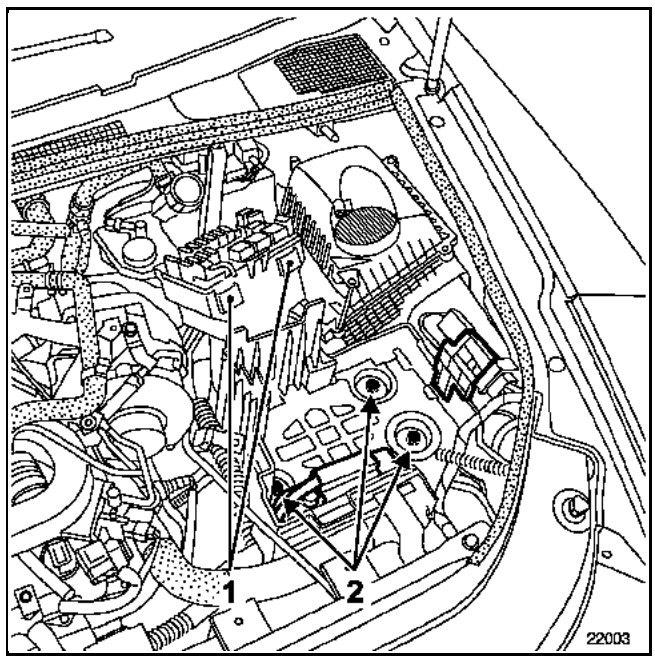

– the fan assembly connectors,
– the fan assembly resistor connections (**G9T only**),
– the fan assembly.

Drain the cooling circuit through the bottom radiator hose.

Remove:
– the front bumper (see Section **54A.A Front bumper**),
– the two headlamps,
– the upper cross member,
– the radiator top hose,
– the two radiator scoops,

GETtheMANUALS.org

– the air hoses on the damper (**G9T only**) at (3),

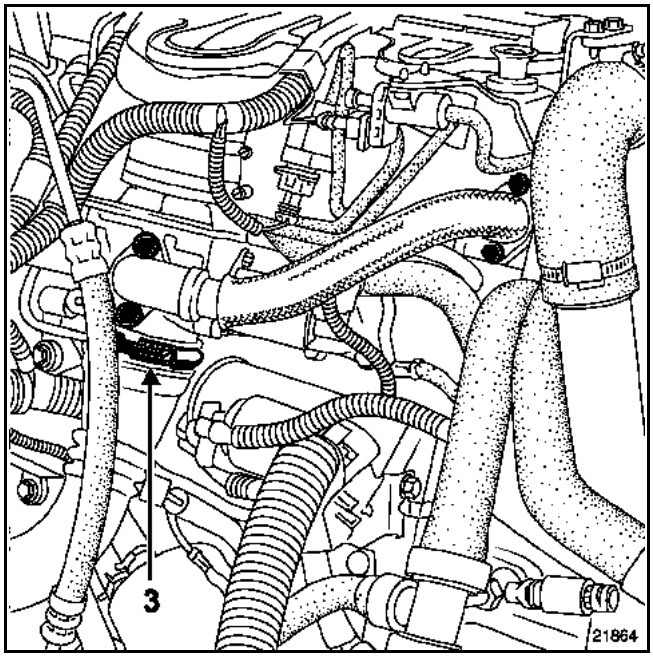

– the two power assisted steering pipe mountings (1),
– condensor connector (2).

Unclip the air-air exchanger condenser at (4) then move it to one side attaching it to the front cross member.

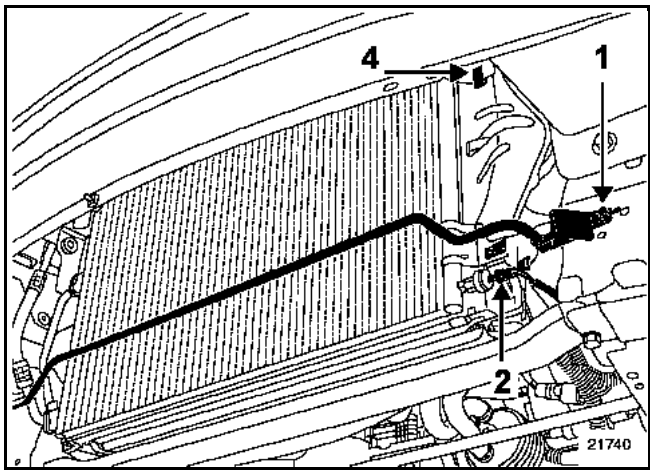

Remove the two hoses on the air cooler (except for **V4Y**).

Unclip the radiator cooler then remove it.

Unpin the two ower radiator lmountings.

Remove the radiator.

REFITTING

Refit in the reverse order to removal.

Ensure that the fins of the radiator, the condenser or the cooler are not damaged during removal; protect them if necessary.

Fill and bleed the cooling circuit (see Section **19A Filling - bleeding**).

Reprogramming is essential after the battery has been disconnected (see **Section 80A Battery special notes**).

GETtheMANUALS.org

SPECIAL TOOLING REQUIRED	
Mot. 1202-01 Mot. 1202-02	Hose clip pliers
Mot. 1448	Remote operation clip pliers for cooling system hose clips

TIGHTENING TORQUE (in daNm)	
Water pump bolts	0.9

REMOVAL

Put the vehicle on a two-post lift.

Disconnect the battery.

Drain the cooling circuit through the radiator bottom hose.

Remove:
– the timing belt (see **Section 11A: Timing belt**),
– the coolant pump.

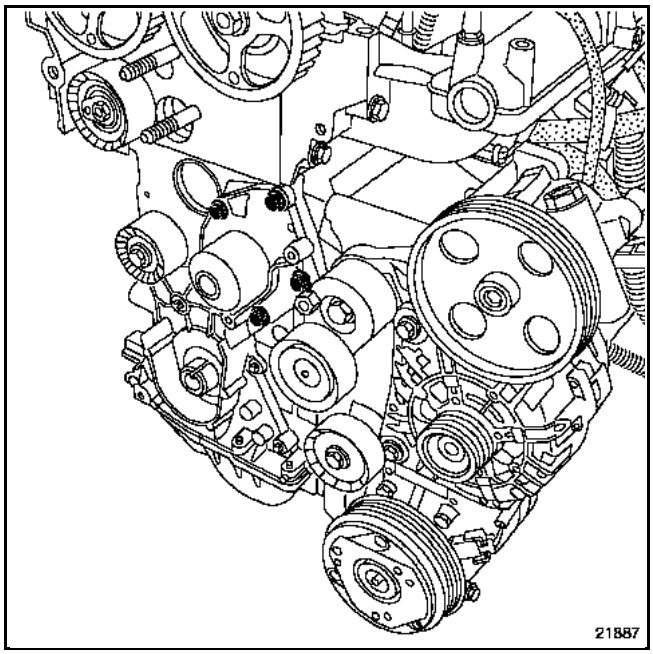

CLEANING

It is very important not to scratch the sealing faces.

Use **Décapjoint** to dissolve any remains of the seal still adhering.

Wear gloves whilst carrying out the following operation.

Apply the product to the part to be cleaned, wait approximately 10 minutes, then remove the product using a wooden spatula.

Do not allow this product to drip on to the paintwork.

GETtheMANUALS.org

NOTE: put a drop of Loctite FRENETANCH on bolts (3) and (4).

Fit the new seal.

Finger tighten the coolant pump mounting bolts in the recommended order shown below, then tighten them to a torque of **0.9 daNm** in tightening order shown.

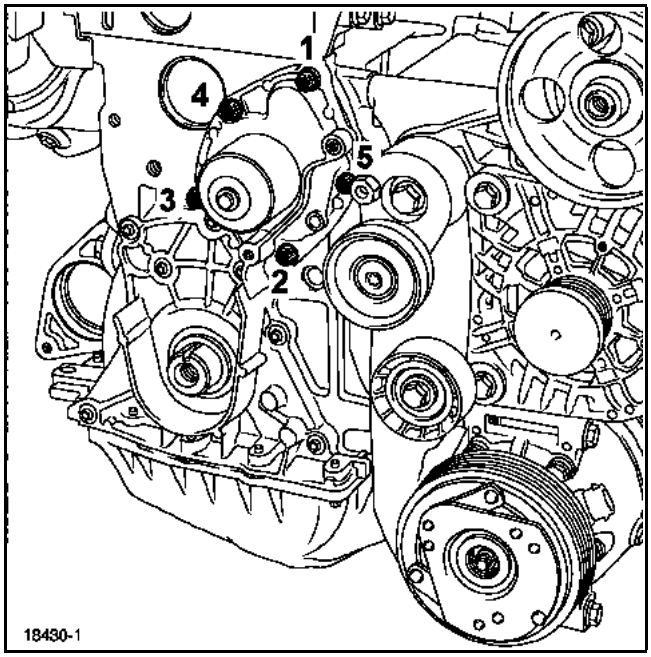

Refit the timing belt (it is essential to follow the method described in **Section 11A Timing belt**),

Fill and bleed the cooling circuit (see **Section 19A Filling and bleeding**).

GETtheMANUALS.org

SPECIAL TOOLING REQUIRED	
Mot. 1202-01 Mot. 1202-02	Hose clip pliers
Mot. 1448	Remote operation clip pliers for cooling system hose clips
EQUIPMENT REQUIRED	
Sprocket-wrench (e.g. FACOM U 14L)	

TIGHTENING TORQUES (in daNm)	
The coolant pump hub nut	5
The coolant pump mounting bolt	1
The coolant pump cover mounting bolt	1

REMOVAL

Put the vehicle on a two-post lift.

Disconnect the battery.

Fit the engine support tool **Mot. 1367-02**.

Drain:
– the cooling circuit through the radiator bottom hose,
– the engine oil (do not refit the oil drain plug).

Remove:
– the front right wheel,
– the mudguard,
– the front right suspended engine mounting.

Lower the engine to remove the coolant pump cover without damaging the engine tie-bar or the exhaust pipe.

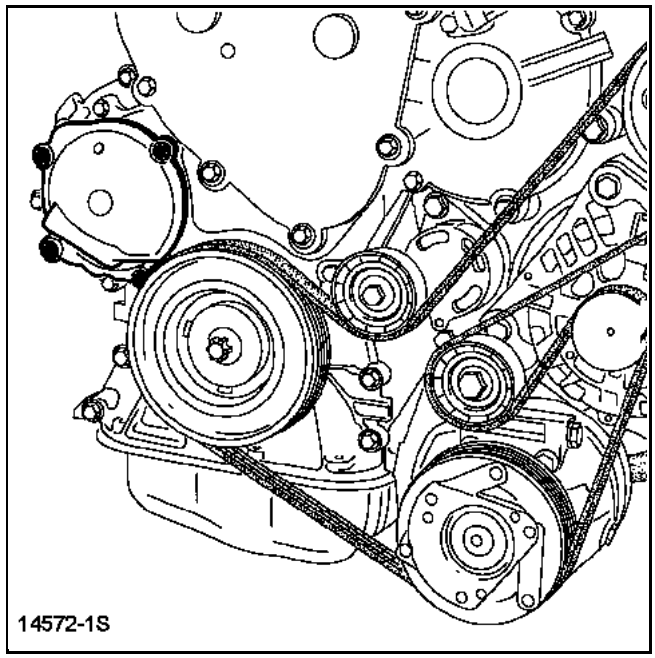

Remove:
– nut (1) of the coolant pump hub (lock the crankshaft with a screwdriver).

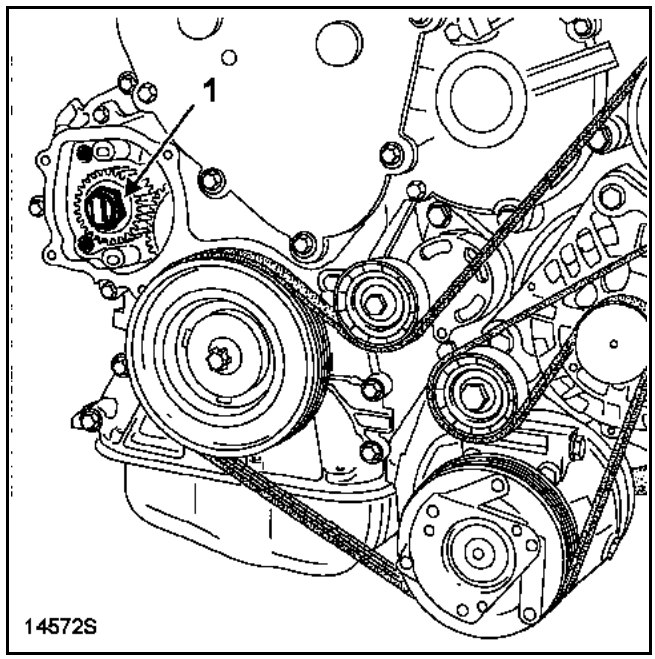

GETtheMANUALS.org

Remove:
– the sprocket from the coolant pump using the general purpose puller,

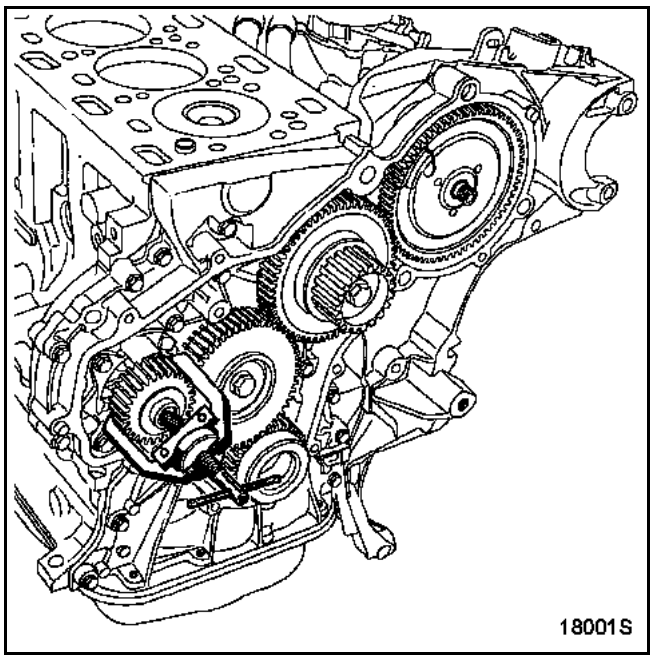

– the coolant pump bolts (2),

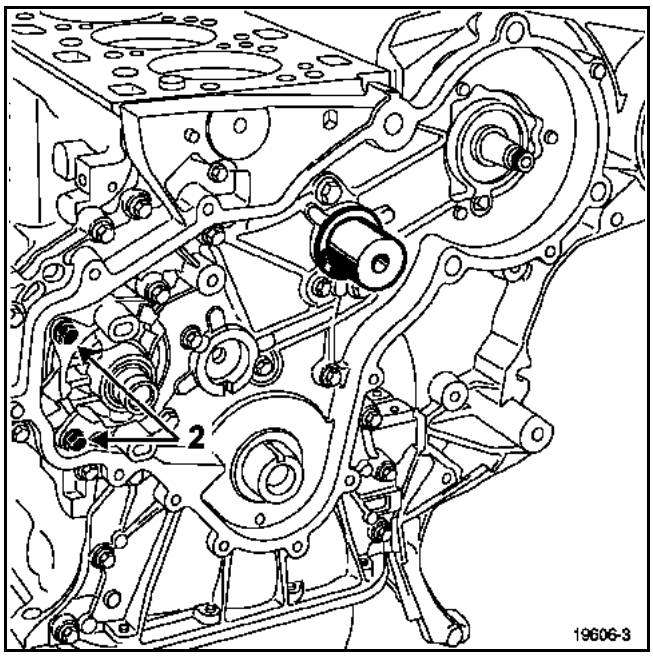

– the coolant pump.

WARNING: some coolant will escape into the oil sump. Make sure the sealing surface of the coolant pump is clean and that the coolant is drained from the sump.

REFITTING

Refit the coolant pump (fitted with a new seal) by pressing down on the bosses (3) to fit the pump properly to the lower timing cover.

Tighten the bolts (4) to a torque of **1 daNm**.

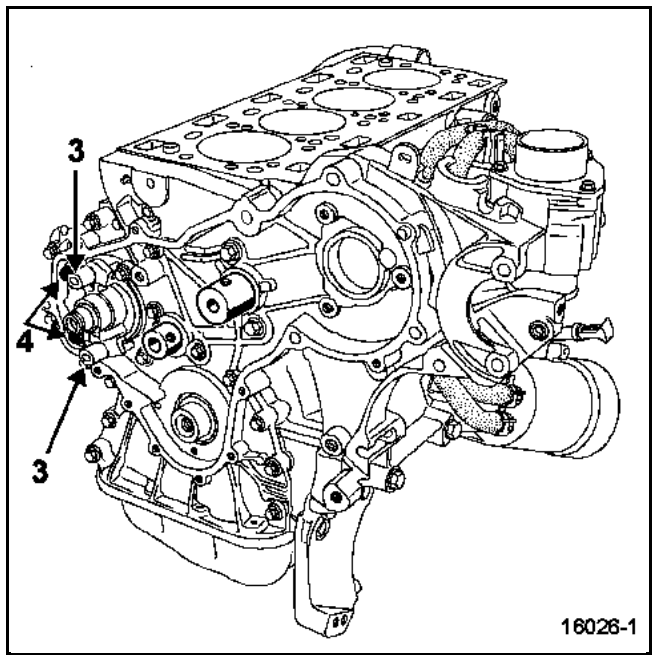

Refit:
– the coolant pump gear by tightening the nut to a torque of **5 daNm**,
– the coolant pump cover by tightening the bolts to a torque of **1 daNm**,

Top up the engine oil.

Fill and bleed the cooling circuit (see **Section 19A Filling - bleeding**).

GETtheMANUALS.org

SPECIAL TOOLING REQUIRED	
Mot. 1376	Pin for locking engine rotation
Mot. 1367-02	Tool for securing engine from below
Mot. 1453	Tool for supporting engine from above
Mot. 1202-01 Mot. 1202-02	Hose clip pliers
Mot. 1448	Remote operation clip pliers for cooling system hose clips
Mot. 1651	Tool for fitting seal, timing end
Mot. 1653	High pressure pump seal fitting tool
EQUIPMENT REQUIRED	
Torque wrench	

TIGHTENING TORQUES (in daNm)	▽
Water pump bolts	1.1
Gear train mounting bolt	3.5
Gear train housing mounting bolt	2.5
Injection pump pulley nut	16
Crankshaft accessories pulley bolt	23.5

Put the vehicle on a two-post lift.

Disconnect the battery.

Drain the cooling circuit through the radiator bottom hose.

Engine oil must be changed when refitting to remove coolant from the sump.

REMOVAL

Disconnect the front right driveshaft by removing:
- the driveshaft relay bearing bracket,
- the steering ball joint,
- the lower ball joint,
- the mounting bolts of the shock absorber base,
- the brake calliper mountings then attach it to the suspension spring,
- the ABS sensor connector.

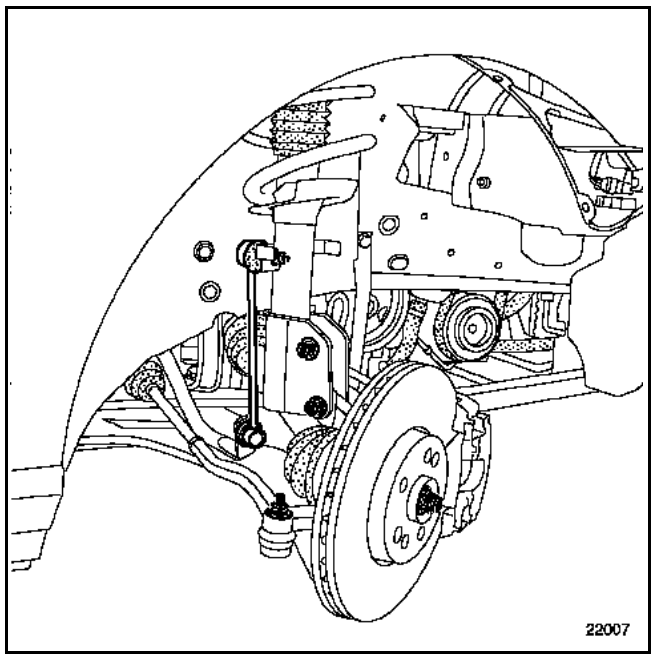

GETtheMANUALS.org

Remove:
– the accessories belt (see **Section 07A Accessories belt tension**),
– the pulleys (1),
– the tensioning device (2),

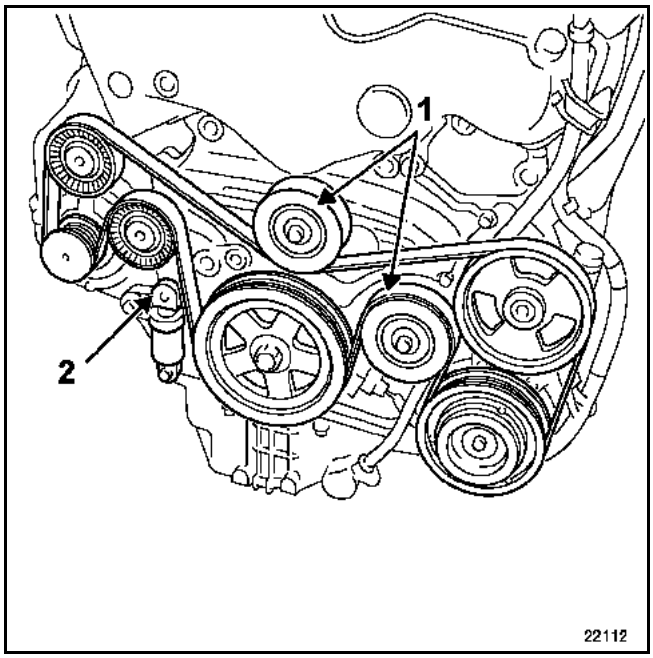

– the timing belt (see **Section 11A Timing belt**),
– the pulleys (3),
– the tension wheel (4).

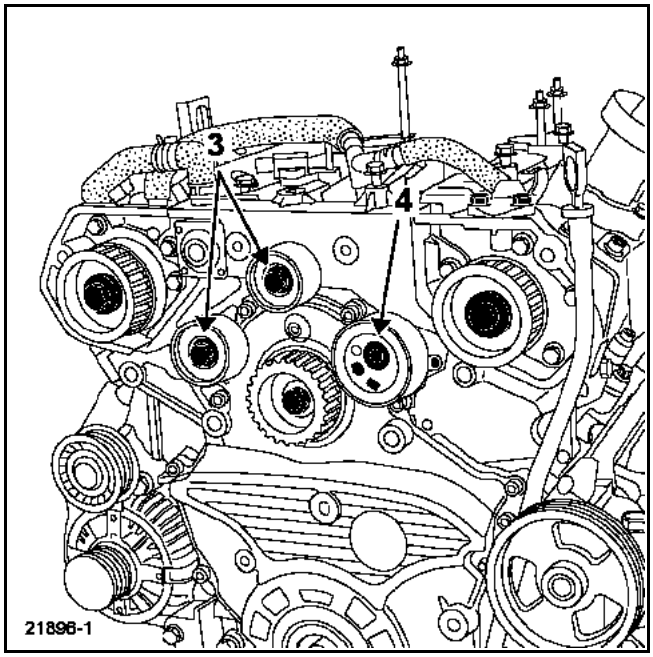

Ensure that the static and moving marks for the crankshaft accessories pulley are aligned.

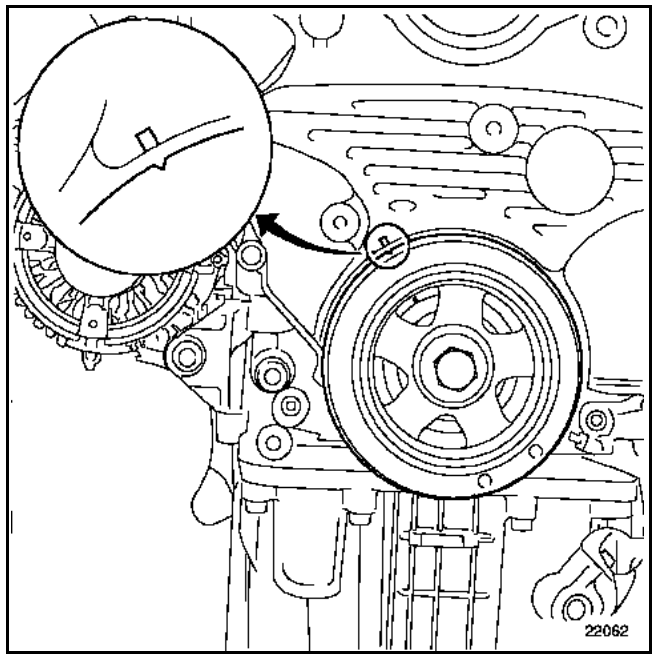

Rotate the crankshaft slowly in an anti-clockwise direction to bring the engine to its locking point (access hole to the converter bolts).

Lock the engine against rotation by inserting **Mot. 1376** in the access hole to the converter bolts.

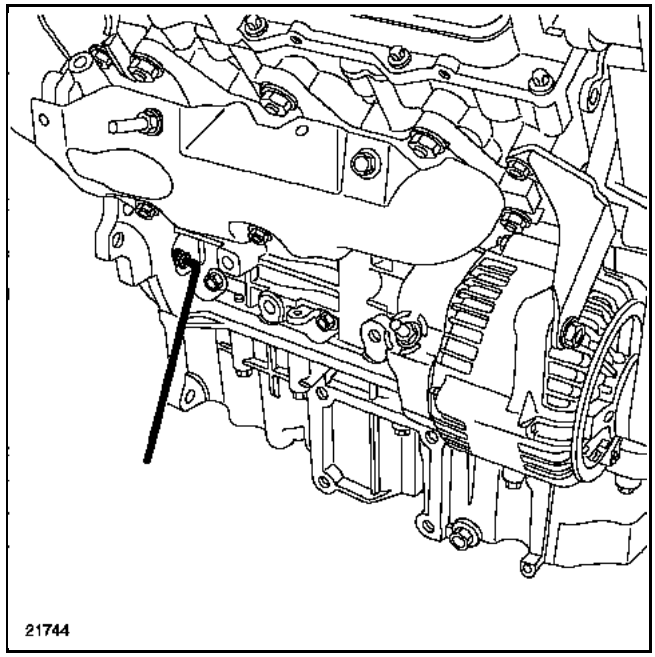

GETtheMANUALS.org

Undo:
– the crankshaft accessories pulley mounting bolt,
– high pressure pump gear mounting bolt (5).

Remove:
– the high pressure pump gear,
– engine locking tool **Mot. 1376**.

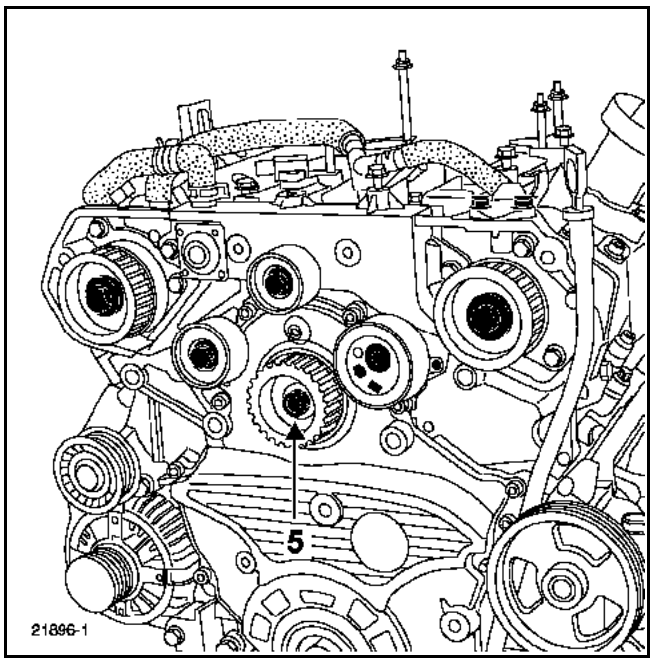

Rotate the engine to bring it to Top Dead Centre again.

Ensure that the static and moving marks for the crankshaft accessories pulley are aligned.

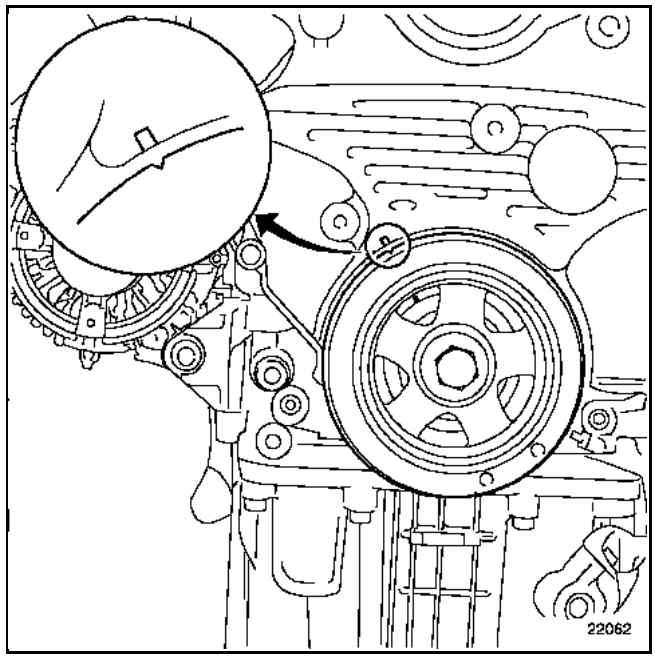

Remove:
– the crankshaft pulley at (6),
– the oil vapour recirculation pipe at (7),
– the crankshaft position sensor at (8),
– the crankshaft position sensor.

Plug the oil vapour recirculation pipe.

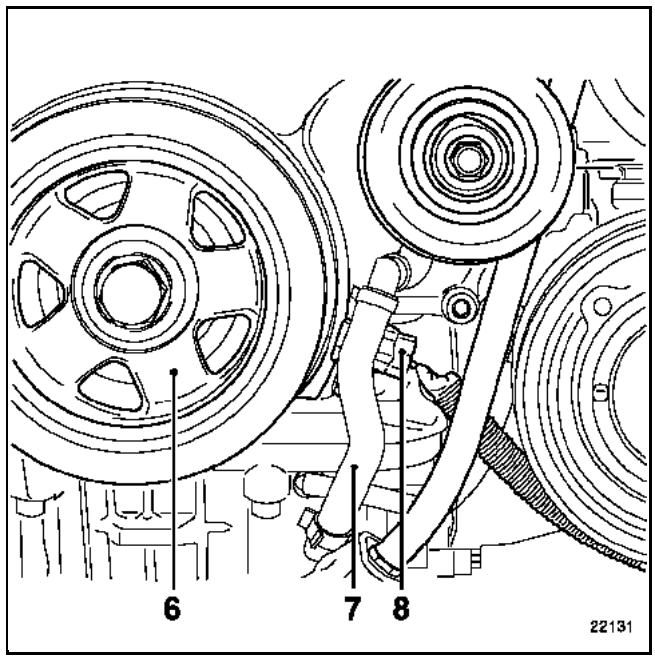

GETtheMANUALS.org

Remove:
– the gear train housing mountings,
– the plug at (9),

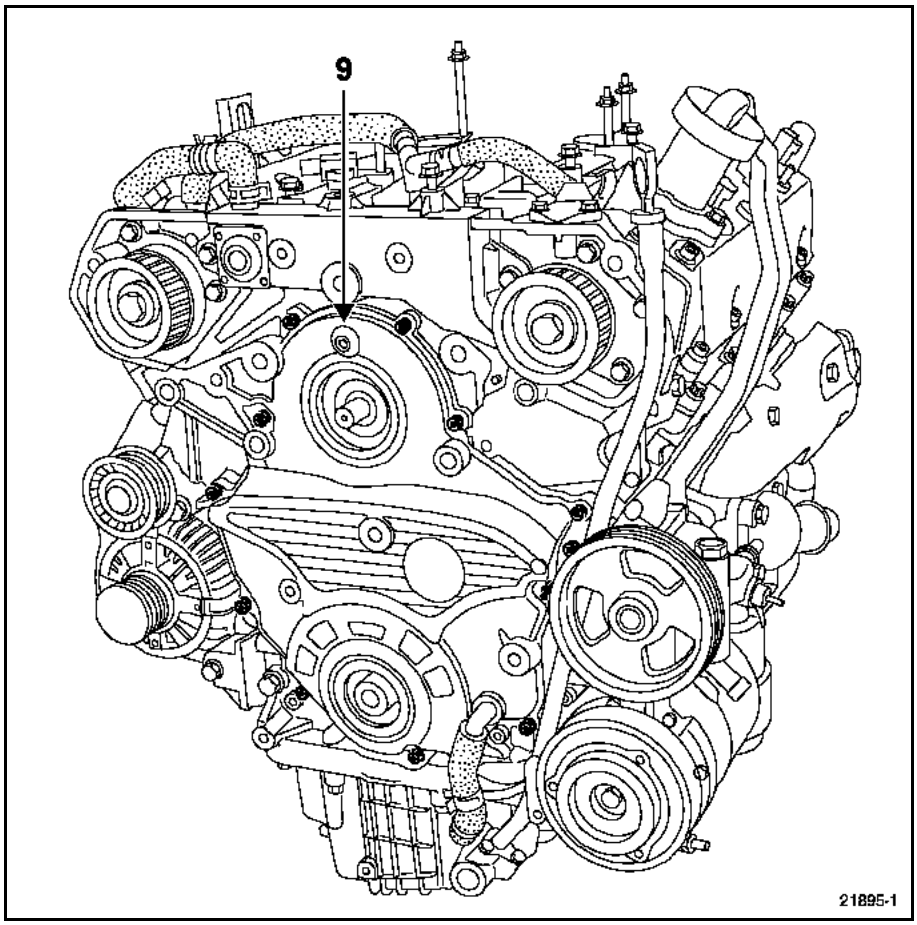

– the gear train housing.

GETtheMANUALS.org

Remove:
– the Top Dead Centre target in front of the oil pump gear,
– timing gears (A) and (B),
– the play compensation sprocket by tightening two **M6x100x50** bolts at (C) to extract it.

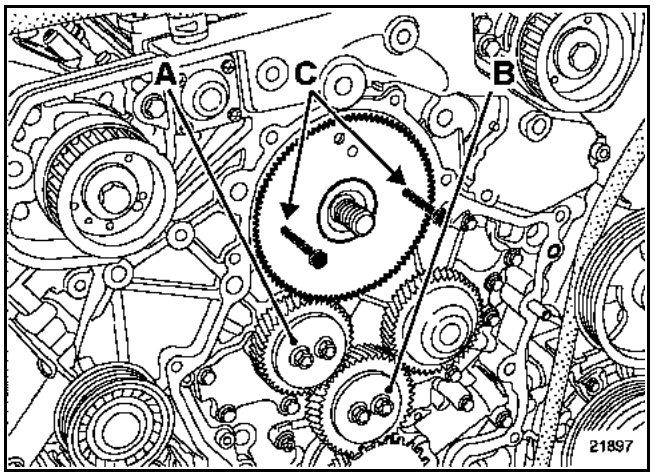

Recover the play compensation spring.

Remove:
– the injection pump pulley, by tightening two **M6x100x50** bolts (D) to force it from the pump shaft,

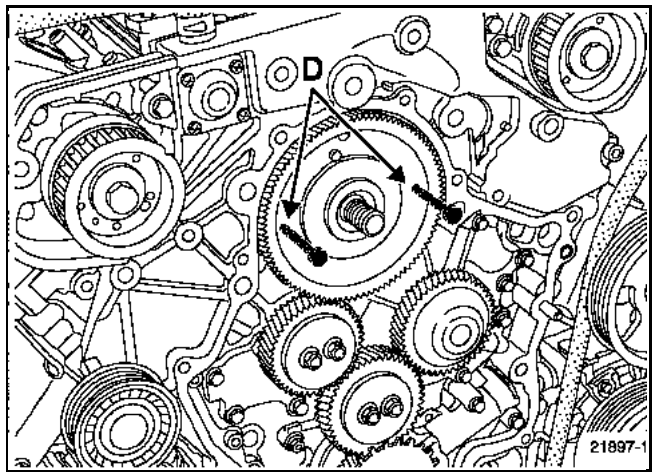

– the coolant pump.

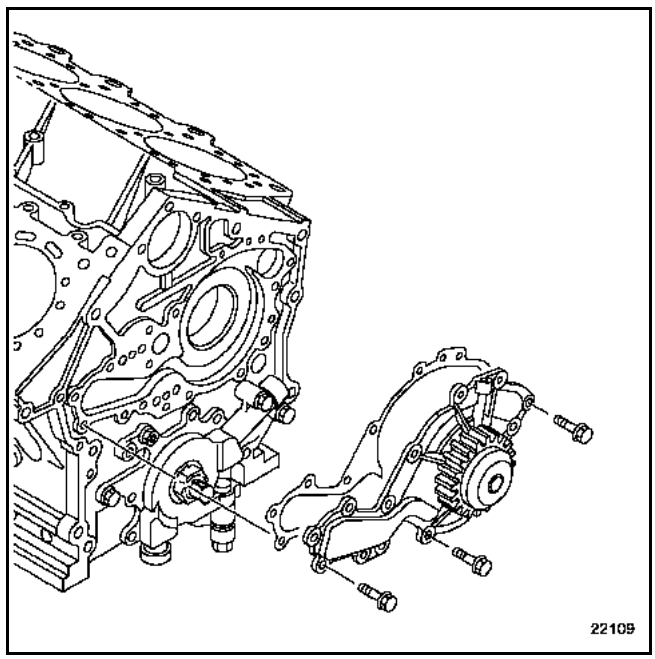

GETtheMANUALS.org

CLEANING

It is very important not to scratch the mating surfaces of any aluminium components.

Use **Décapjoint** to dissolve any part of the seal which remains stuck to the gear train housing.

Apply the product to the part to be cleaned, wait approximately 10 minutes, then remove the product using a wooden spatula.

REFITTING

TAKE CARE when fitting the seal, it is very important to position it correctly under rib (E) and on centring pins (F).

Refit:
– the coolant pump seal,

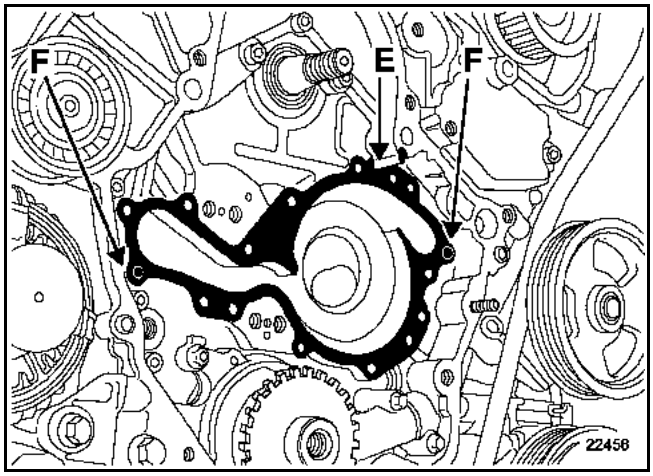

– the coolant pump by tightening the bolts to a torque of **1.1 daNm**.

METHOD FOR ADJUSTING PLAY COMPENSATION ON THE INJECTION PUMP PULLEY

In a vice:
– Fit the spring into the injection pump pulley.

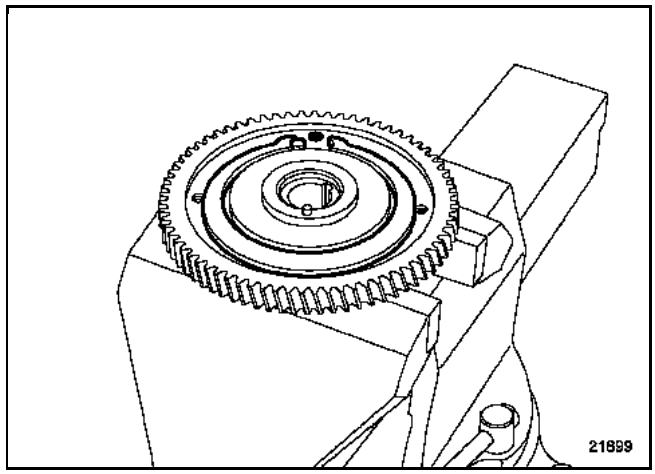

GETtheMANUALS.org

Tighten two bolts (**M6x100x50**) at (G) in the play compensation sprocket.

Fit the play compensation sprocket onto the injection pump pulley.

Rotate the play compensation sprocket using a screwdriver to align it with the injection pump pulley.

Screw one **M6x100x15** screw into (H) to join the assembly when the holes are in alignment.

NOTE: the retaining bolt in may be of local fabrication (a slot in the bolt head can be used to remove it).

Remove the two bolts used to position the screwdriver.

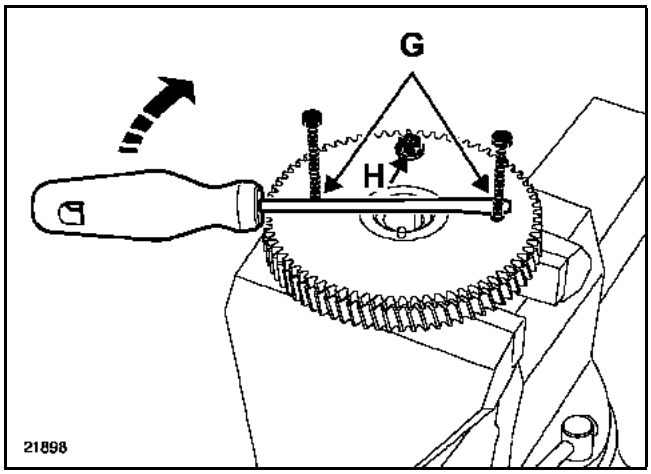

Refit the two aligned pulleys to the engine.

GETtheMANUALS.org

METHOD FOR GEAR TRAIN TIMING

Refit the two intermediate gears (1) and (2), aligning their reference marks with those on the gears of the oil pump (3) and the injection pump (4).

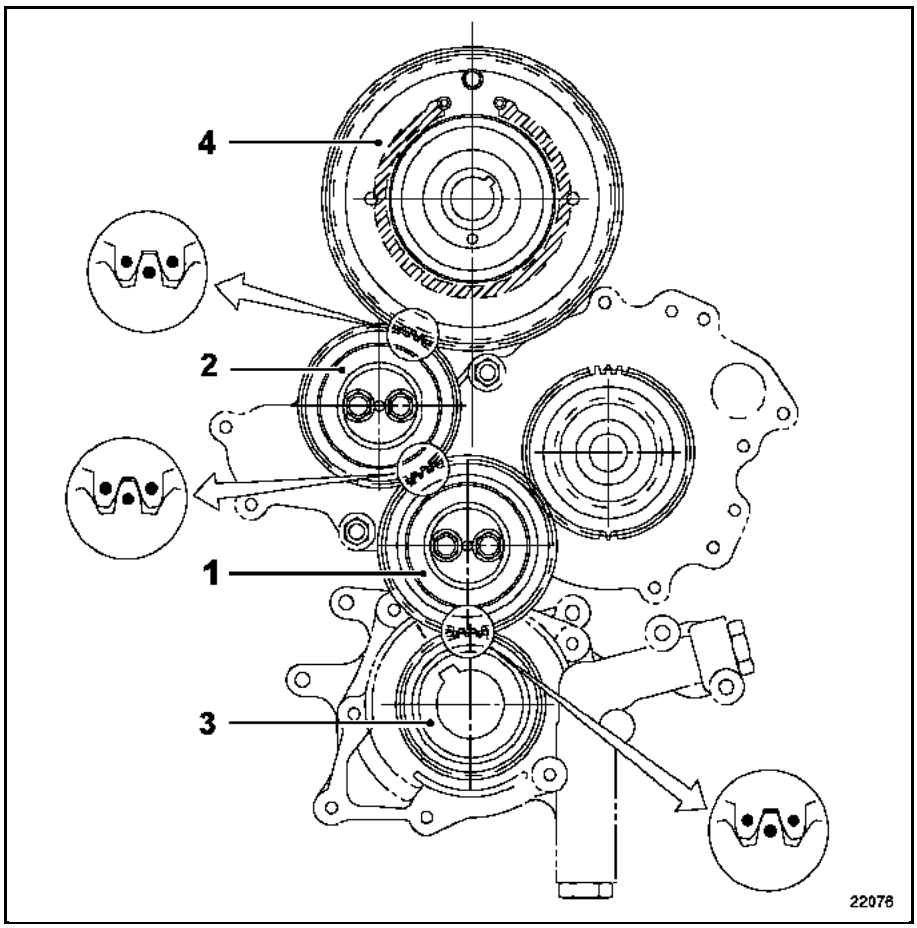

Tighten the two intermediate gear bolts to a torque of **3.5 daNm**.

Refit the Top Dead Centre target in front of the oil pump gear with the marking facing outwards.

GETtheMANUALS.org

Refit the gear train housing by applying a **3 mm** diameter bead of **THREEBOND** as in the diagram below having first:
– cleaned and degreased the sealing surfaces,
– removed the crankshaft accessories pulley seals and the high pressure pump gear seals from the gear train housing.

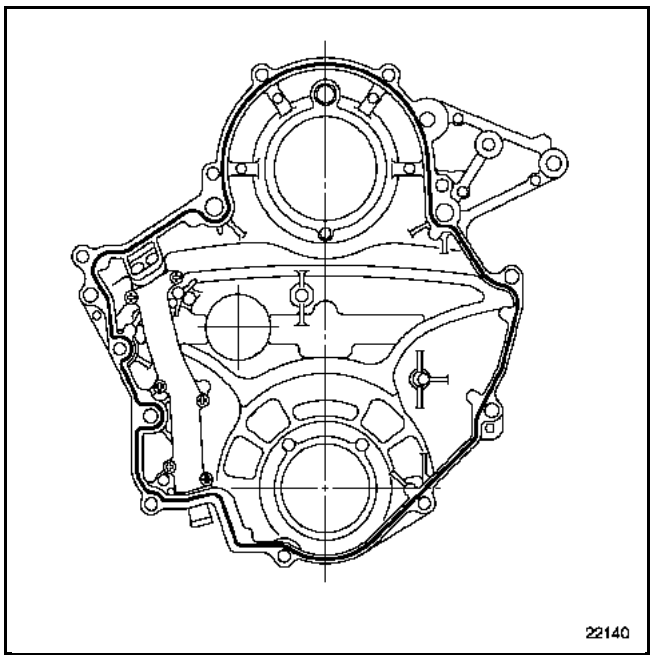

Tighten the housing bolts to a torque of **2.5 daNm** in the order recommended below.

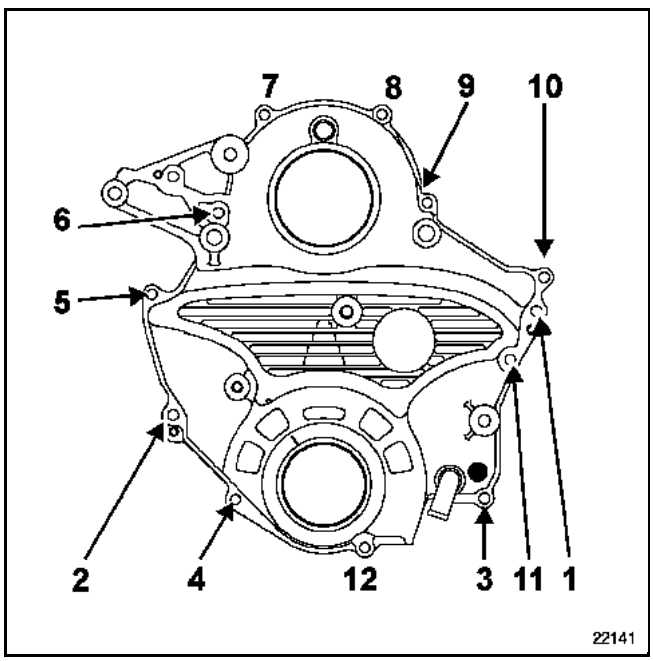

Remove the manufacturer's bolts through opening (5).

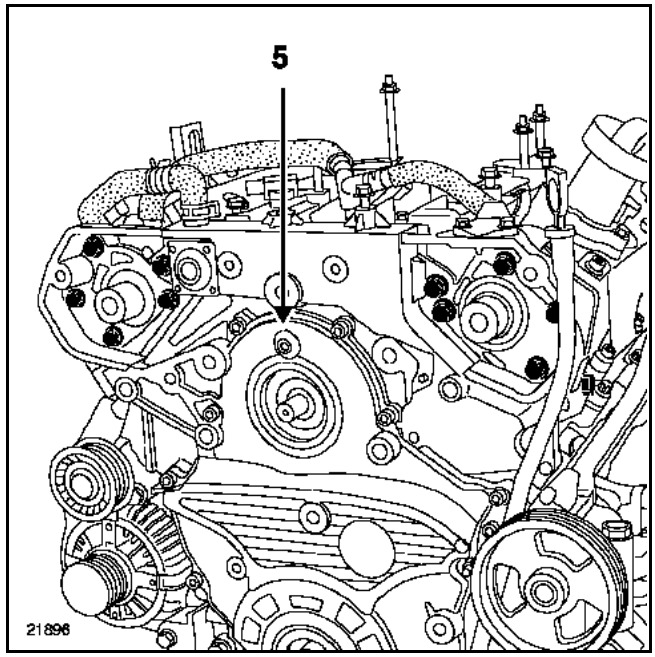

Refit the plug.

Fit the new seal:
– for the crankshaft accessories pulley using tool **Mot. 1651**,

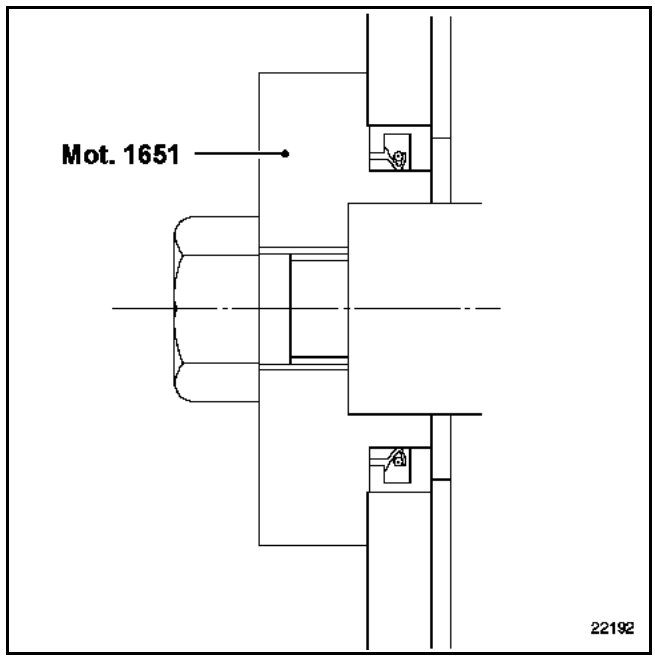

GETtheMANUALS.org

– for the high pressure pump gear using tool **Mot. 1653**.

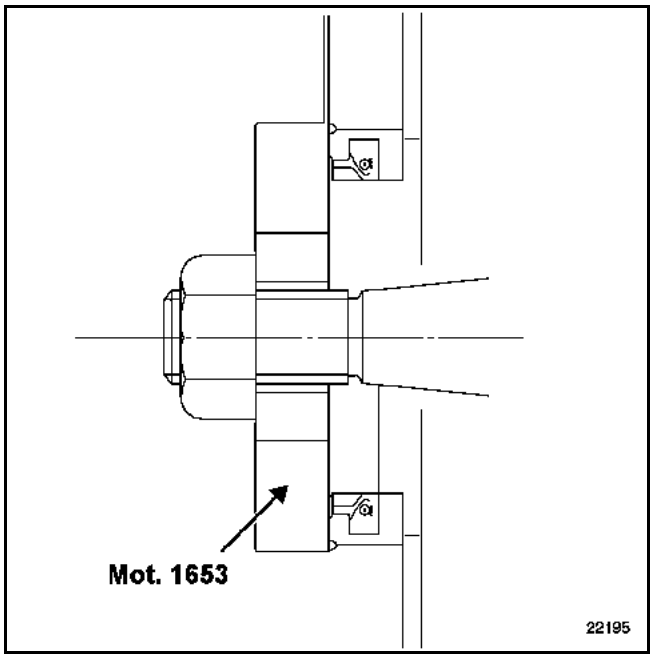

Fit the crankshaft accessories pulley, align the mounting bolt.

Ensure that the static and moving crankshaft accessories pulley marks and the high pressure pump gear marks are aligned.

Rotate the crankshaft slowly in an anti-clockwise direction to bring the engine to its locking point.

Fit tool **Mot. 1376**.

Refit:
– the injection pump pulley gear, tightening it to a torque of **16 daNm**,
– the crankshaft pulley, tightening it to a torque of **23.5 daNm**.

Remove tool **Mot. 1376**.

Rotate the engine to bring it to Top Dead Centre again.

Ensure that the static and moving marks:
– for the crankshaft accessories pulley,
– of the injection pump gear,
are aligned.

Refit:
– the timing belt tensioner wheels,
– the timing belt tension wheel,
– the timing belt (see **Section 11A Timing belt**),
– the accessories belt tensioning device,
– the accessories belt tensioner wheels,
– the accessories belt (see **Section 07A Accessories belt tension**),
– the suspended engine mounting(see **Section 19A Suspended engine mounting**).

Fit the front right driveshaft (see **Section 29A Transmission**).

Drain the oil from the engine.

NOTE: it is important to ensure that there is no longer any coolant in the sump before filling with oil.

Perform the following operations:
– fill and bleed the cooling system (see Section **19A Filling - bleeding**).
– top up the engine oil.

Continue the refitting procedure in the reverse order to removal.

GETtheMANUALS.org

SPECIAL TOOLING REQUIRED	
Mot. 1202-01 Mot. 1202-02	Hose clip pliers
Mot. 1448	Remote operation clip pliers for cooling system hose clips
Mot. 1372	Set for removing tamperproof screws
Mot. 1390	Adjustable engine support tool
T. Av. 476	Ball joint extractor tool
EQUIPMENT REQUIRED	
Torque wrench	

TIGHTENING TORQUES (in daNm)	
Water pump bolts	0.9
Coolant pump housing bolt	1.1
Chain tensioner housing bolt	1.1
Chain tensioner bolt	0.8

This operation involves removing the fan assembly.

REMOVAL

Put the vehicle on a two-post lift.

Disconnect the battery.

Remove:
- the engine (see **Section 10A Engine and gearbox**),
- the accessories belt (see **Section 07A Accessories belt tension**).
- the tension wheel and its mounting at (A),

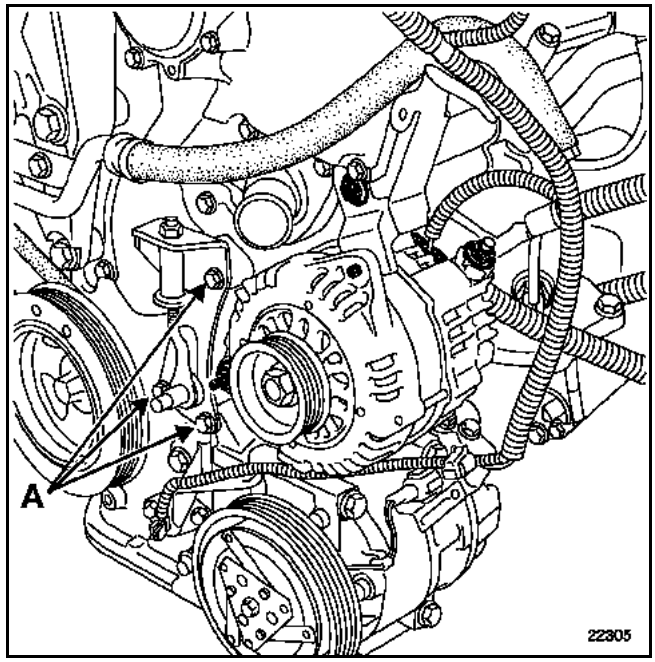

GETtheMANUALS.org

– Set the engine at Top Dead Centre.

Remove:
– the coolant pump housing at (B),
– the timing tensioner housing at (C),

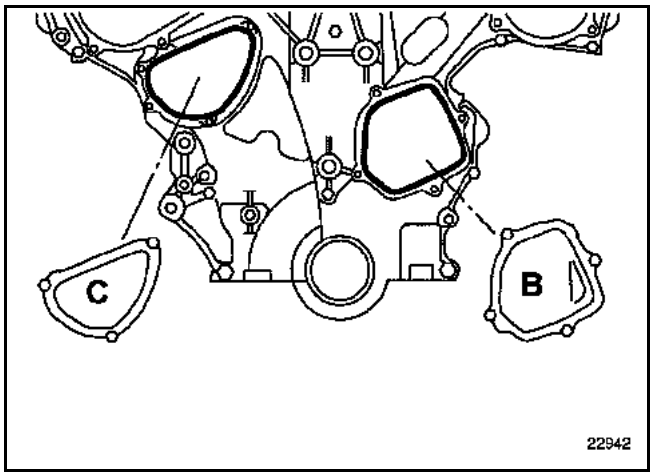

– the camshaft dephaser housings, then mark the position of the dephasers at Top Dead Centre,
– the chain tensioner at (D) (see **Section 11A Timing chain**),

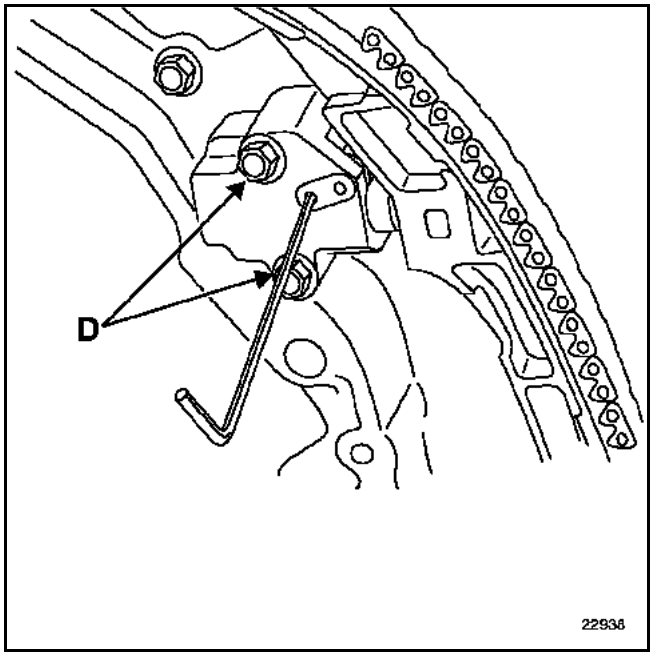

– the coolant pump mountings at (E),

Rotate the engine anti-clockwise approximately twenty degrees.

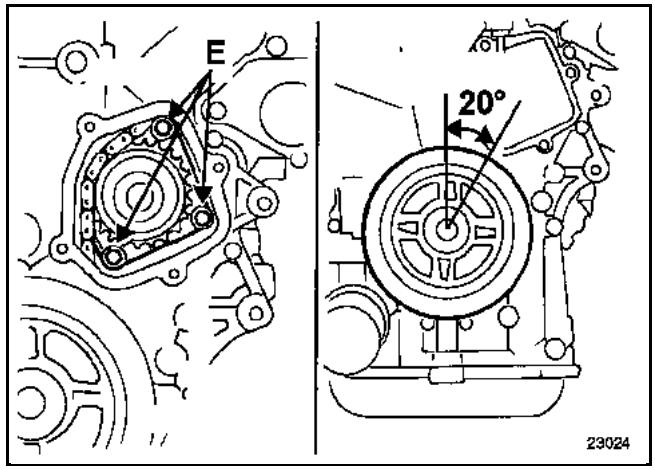

Remove the coolant pump.

NOTE: **before refitting the pump, apply engine oil to seal (1) and coolant to seal (2).**

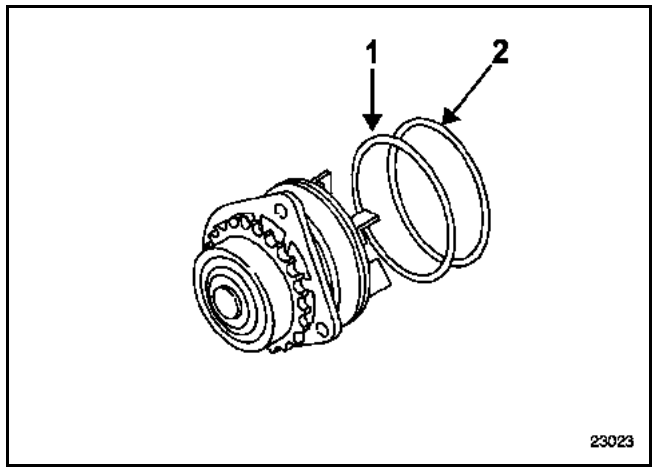

GETtheMANUALS.org

REFITTING

NOTE: take care not to damage the seals when refitting the pump.

Refit the coolant pump.

Reprime the timing chain tensioner with engine oil.

Refit the timing chain tensioner.

Clean the coolant pump cover and the timing chain tensioner cover using a scraper.

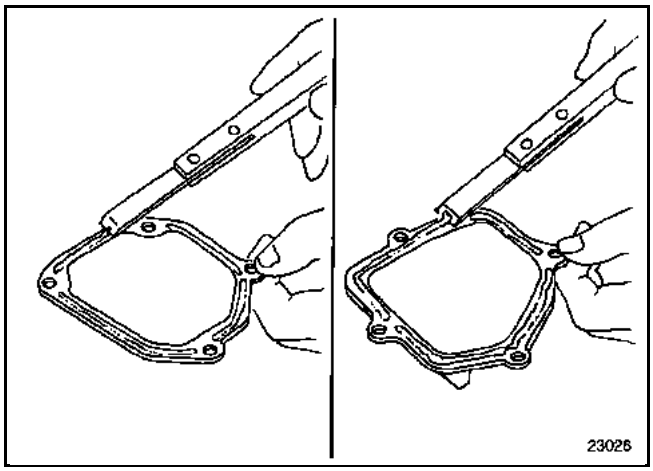

Apply a **3 mm** thick bead of **Loctite 518**.

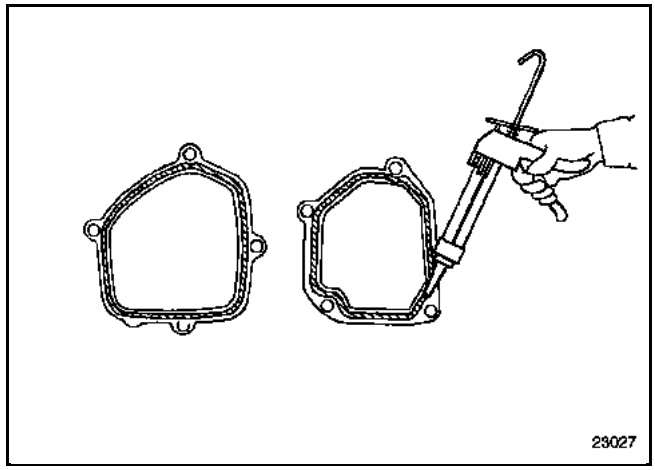

Run the engine for **3 minutes** without exceeding **3000 rpm**, in order to bleed the chain tensioner lubrication circuit.

NOTE: pinking may occur during the operation.

Refitting is the reverse of removal.

Refit the engine (see the procedure described in Section **10A Engine and gearbox**).

Fill and bleed the cooling circuit (see Section **19A Filling and bleeding**).

GETtheMANUALS.org

The exhaust system is stainless steel throughout.

During operation, the catalytic converter reaches high temperatures, and consequently, it is vital not to park the vehicle in a place where combustible materials could come into contact with it and be ignited.

All damaged heat shields must be replaced.

WARNING:
– the sealing between the exhaust manifold gasket face and the catalytic converter must be perfect.
– any gasket removed must be **REPLACED**,
– the catalytic converter must not be subjected to mechanical shock during removal or refirring, as this could damage it.

EXHAUST UNDERBODY MOUNTING

When removing the silencer, remove:
– acoustic damping bar (1),
– silencer - expansion chamber collar (2),

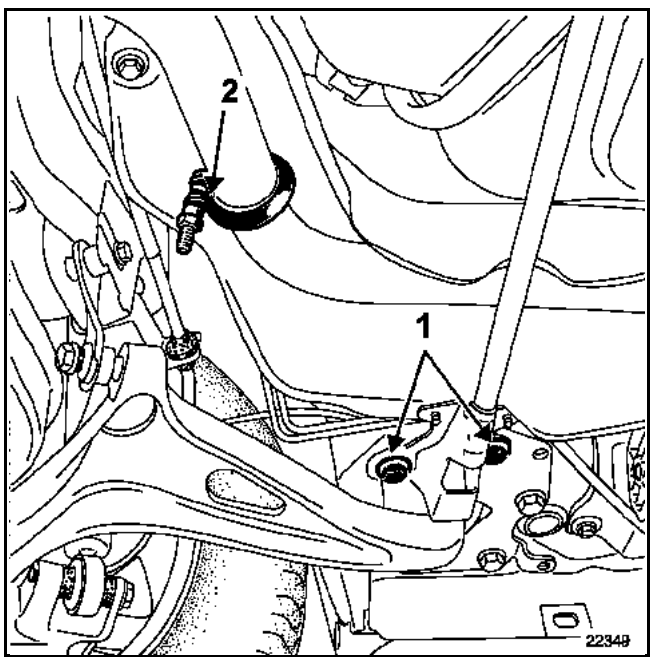

– the two mounting nuts (3) for the silencer silentbloc fittings.

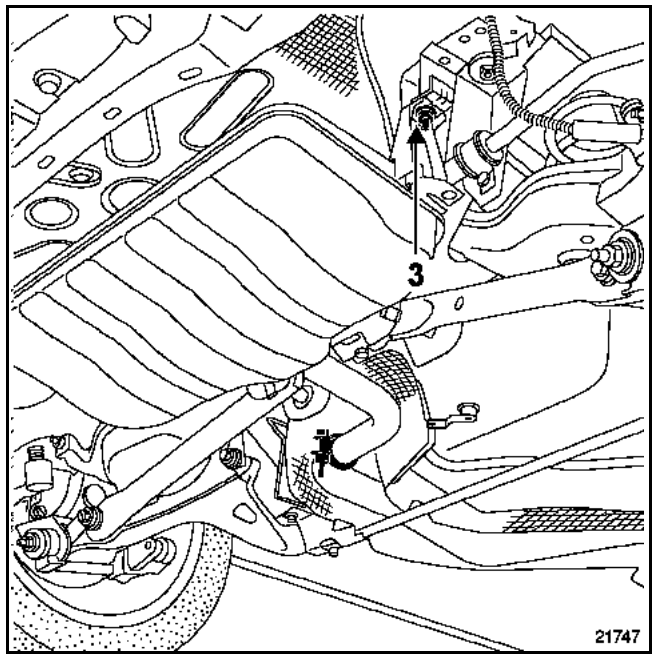

When refitting the collars position them so that their tightening surface acts on both pipes equally.

Ensure that the collar bolt is torque tightened to: **2.5 daNm** to prevent the pipes from being deformed and the collars from leaking. Also ensure the correct torque tightening value of the acoustic damping bar (**6.2 daNm**).

REPLACING EXHAUST PIPE COMPONENTS

Removal of the various components is not particularly difficult.

There are one (or more) cut off points between the catalytic converter inlet and the silencer outlet.

No cutting zone is therefore required to replace the various components.

GETtheMANUALS.org

EXHAUST PIPE LAYOUT

F4R Turbo engine

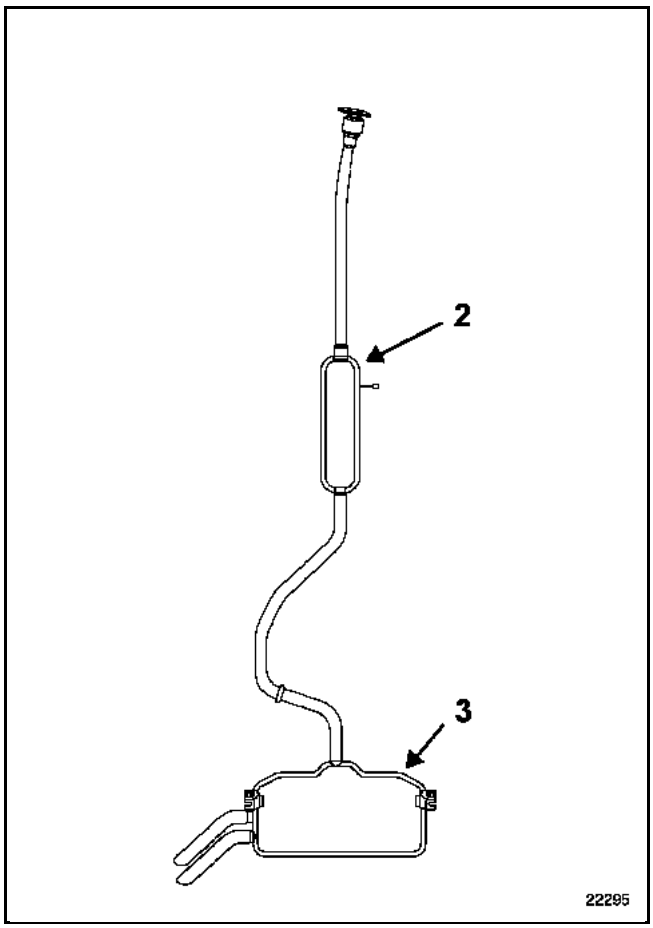

G9T engine

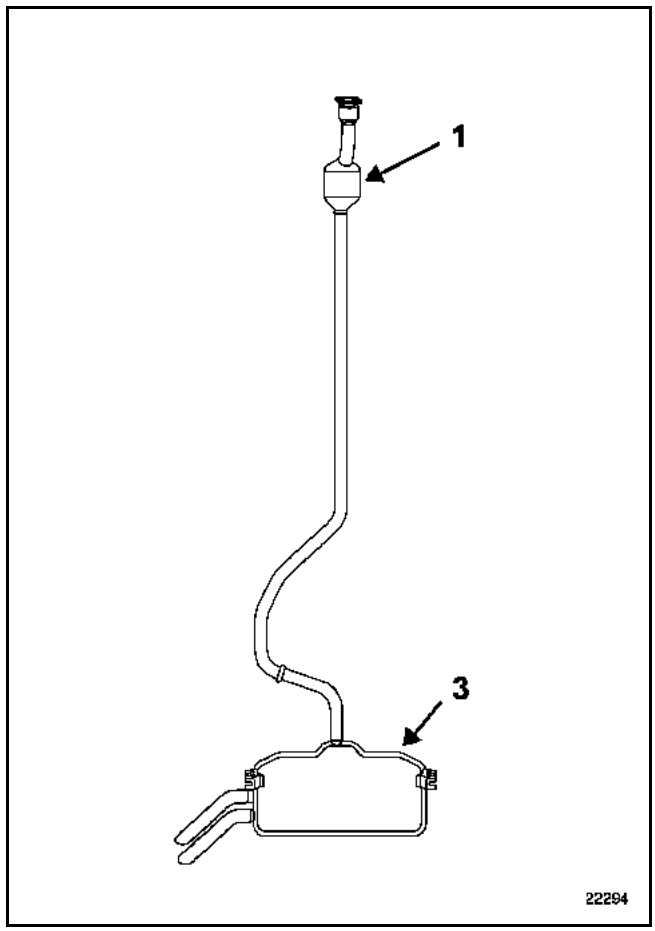

1 Catalytic converter
2 Expansion chamber
3 Silencer

GETtheMANUALS.org

EXHAUST PIPE LAYOUT

P9X engine

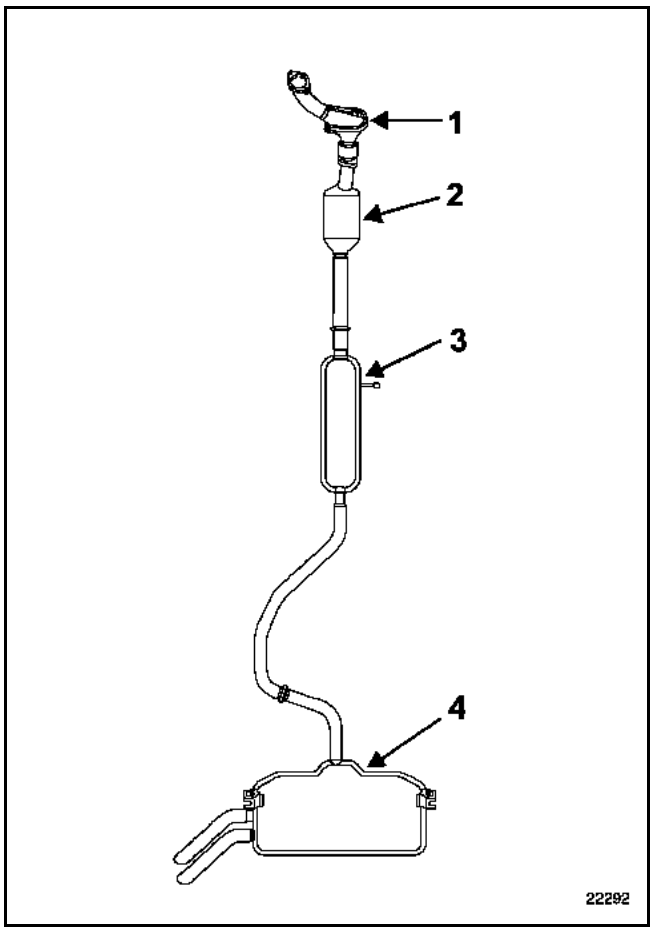

V4Y engine

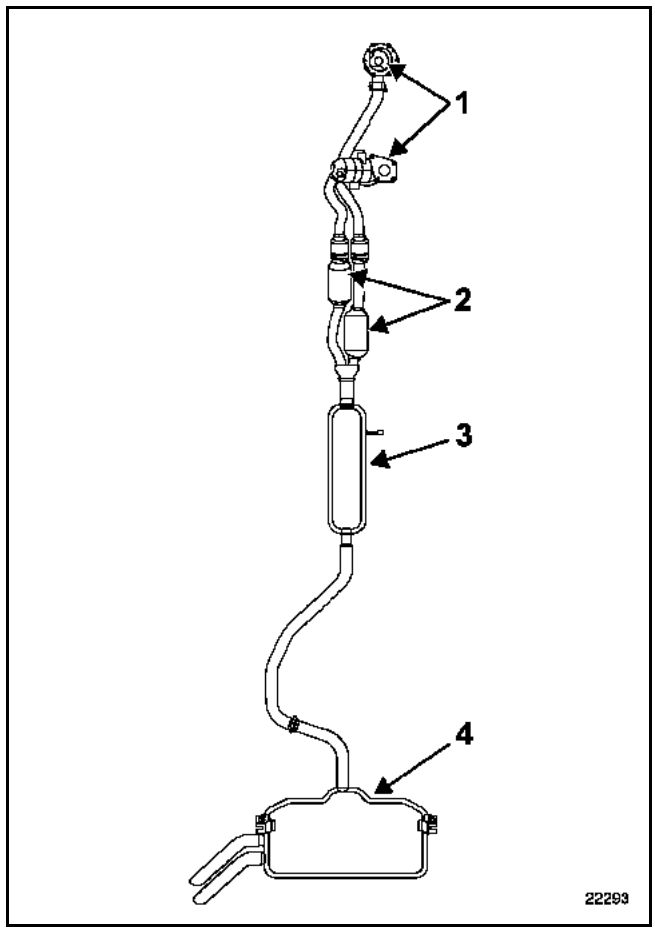

1 Precatalytic converter
2 Catalytic converter
3 Expansion chamber
4 Silencer

GETtheMANUALS.org

TIGHTENING TORQUES (in daNm)	
Three-point bracket nuts	2.1
Nuts securing catalytic converter to the turbocharger	3.2
Engine tie-bar	
sub-frame side	10.5
engine side	18
Turbocharger heat shield air duct	0.8
Three-point bracket brace	2.1
Catalytic converter brackets	0.8

REMOVAL

Put the vehicle on a two-post lift.

Disconnect the battery.

Removal of the catalytic converter requires the removal of the right-hand driveshaft (see **Section 29A Transmission: Driveshaft**).

Remove:
– the two engine tie-bar bolts (1),

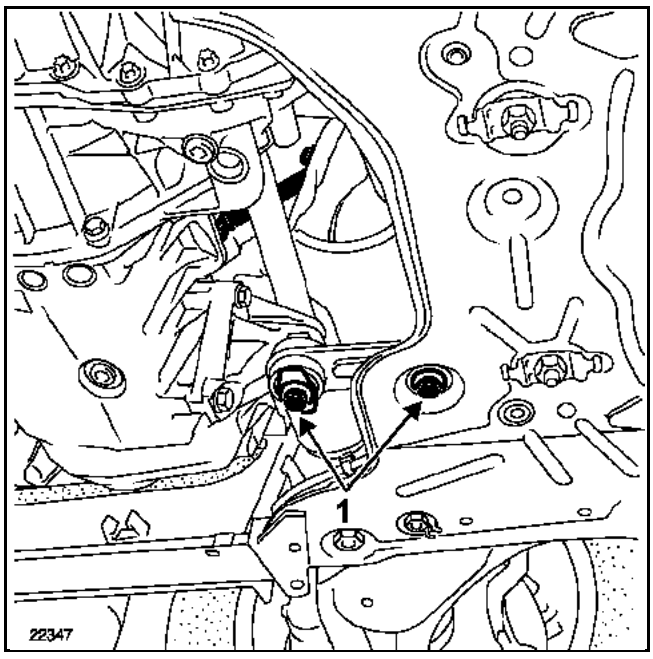

– the engine tie-bar mounting,
– the driveshaft bearing.

– the four turbocharger heat shield air duct bolts (2),

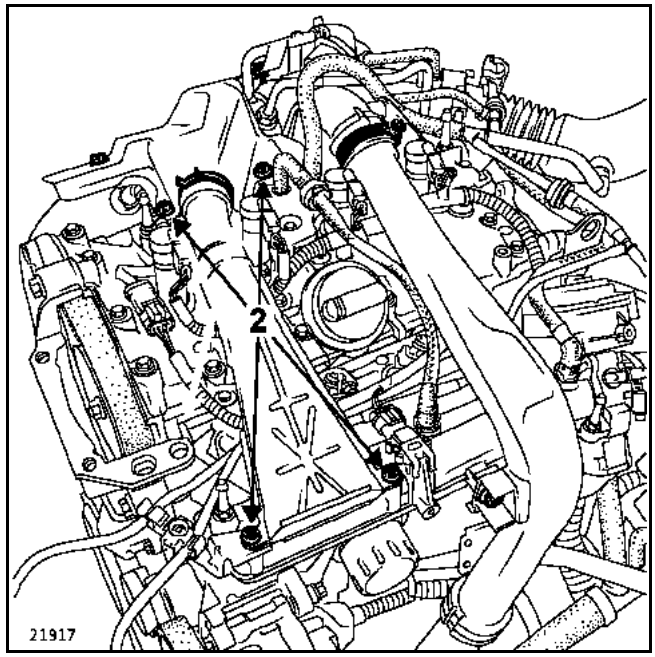

– the two oxygen sensors (3),
– the two catalytic converter brackets (4),
– the catalytic converter three-point bracket brace on the unit (5),
– the three nuts (6) securing the catalytic converter to the turbocharger.

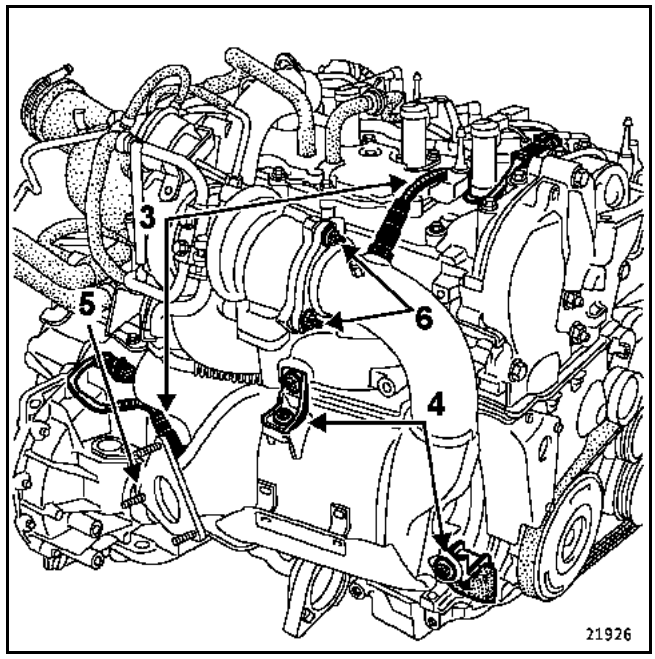

GETtheMANUALS.org

Remove the three exhaust bracket mounting nuts (7).

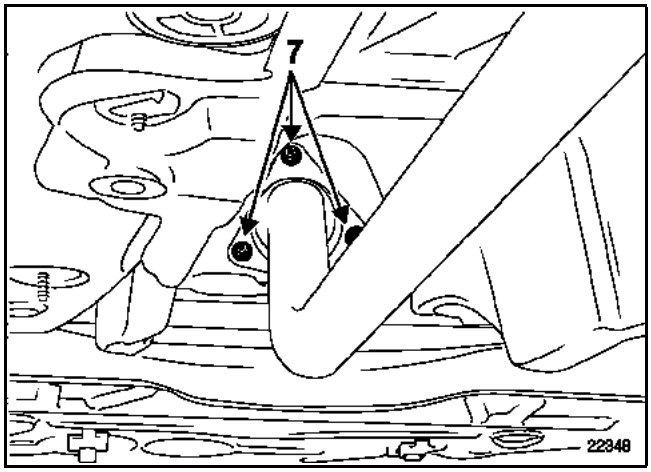

Remove the catalytic converter.

REFITTING

Position the catalytic converter nuts on the turbocharger.

Torque-tighten in order:
– the catalytic converter brackets,
– the catalytic converter nuts on the turbocharger,
– the exhaust pipe bracket.

Proceed in the reverse order to removal.

Replace the exhaust and turbocharger bracket seals.

GETtheMANUALS.org

TIGHTENING TORQUES (in daNm)	
Nuts securing the catalytic converter to the expansion chamber	2.1
Nuts securing catalytic converter to the turbocharger	4.4
Pre-converter stay bolt	2.1
Engine tie-bar	
sub-frame side	10.5
engine side	18
Acoustic damping bar bolt	6.2

REMOVAL

Removal of the catalytic converter requires the removal of the right-hand driveshaft (see **Section 29A Transmission: Driveshaft**).

Remove:
– acoustic damping bar (1),
– exhaust pipe collar (2),

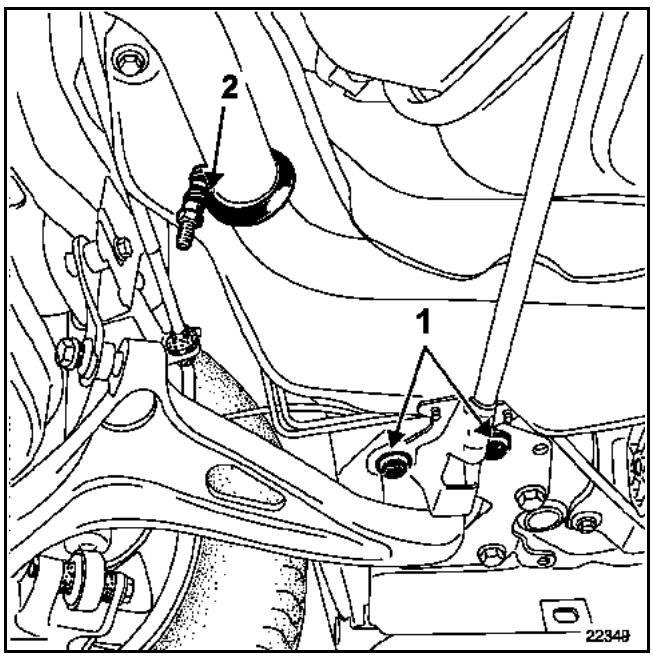

– the two-point flange (3) between the catalytic converter and expansion chamber.

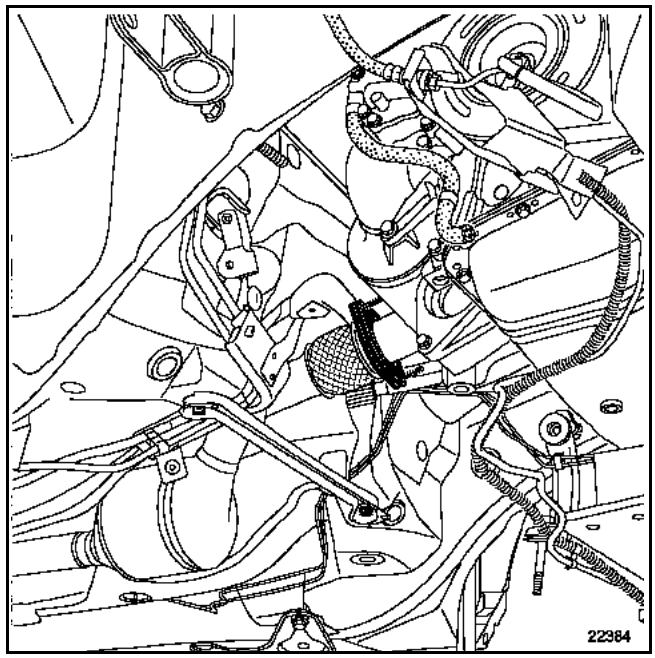

– the exhaust pipe,
– the engine tie-bar (4),

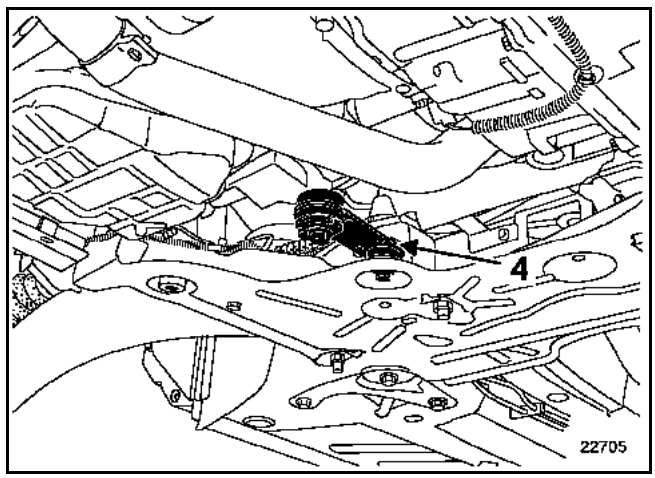

– the driveshaft bearing.

GETtheMANUALS.org

– the three nuts connecting the turbocharger to the catalytic converter (6),
– the two catalytic converter stays (7),

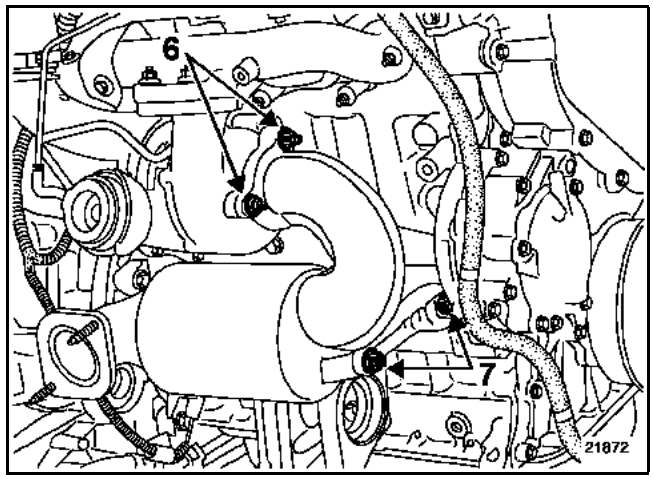

REFITTING

Proceed in the reverse order to removal.

Replace the seals with new ones.

Observe the tightening torques.

The other components involve no particular difficulties.

GETtheMANUALS.org

TIGHTENING TORQUES (in daNm)	
Catalytic converter/pre-converter flange bolts	2.1
Catalytic converter/expansion chamber collar	2.1
Heat shield mounting bolts	

REMOVAL

Put the vehicle on a two-post lift.

Disconnect the battery.

Remove:
– the under-engine fairing,
– the two heat shield mounting bolts using a spanner through the sub-frame (1),

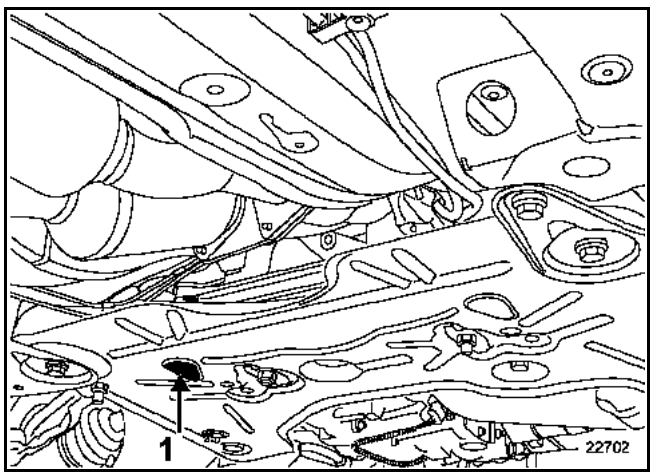

– the four heat shield retaining clips (2).

Withdraw the heat shield back.

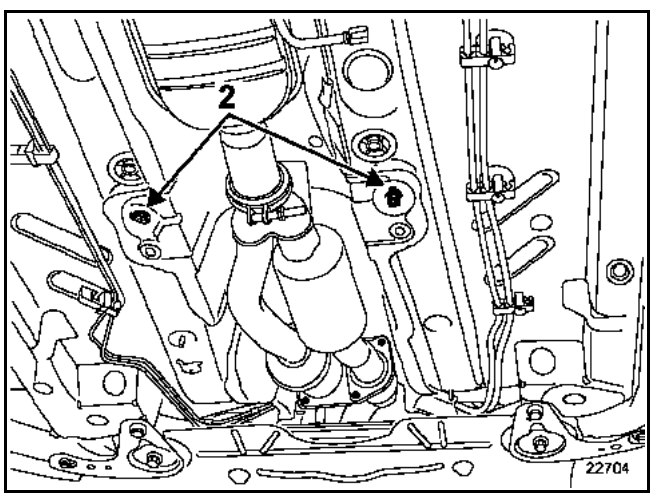

Place a component jack under the exhaust pipe to support it and keep it in place.

Remove:
– the four catalytic converter/pre-converter bolts (3),
– the collar fixing the catalytic converter to the expansion chamber (4),

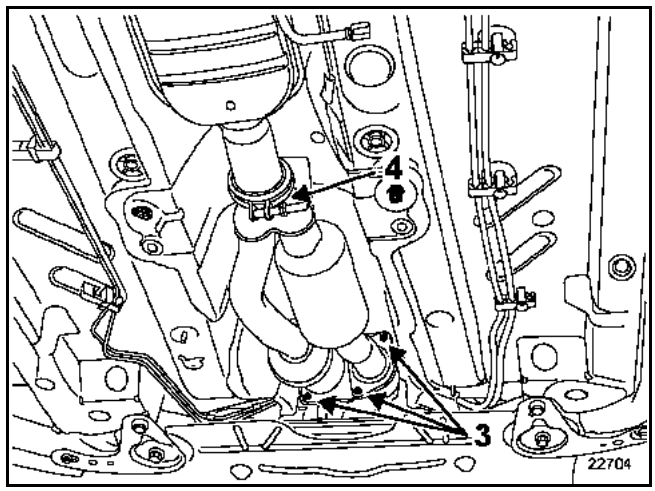

– the catalytic converter.

REFITTING

Proceed in the reverse order to removal.

Replace the gasket with a new gasket.

Fit a new collar.

Observe the tightening torques.

GETtheMANUALS.org

TIGHTENING TORQUES (in daNm)	
Catalytic pre-converter bolts	2.1
Oxygen sensors	4.4
Pre-converter stay bolts	2.1
Catalytic converter/pre-converter flange nuts	2.1

REMOVAL

Put the vehicle on a two-post lift.

Disconnect the battery.

Remove:
– oxygen sensor (1),

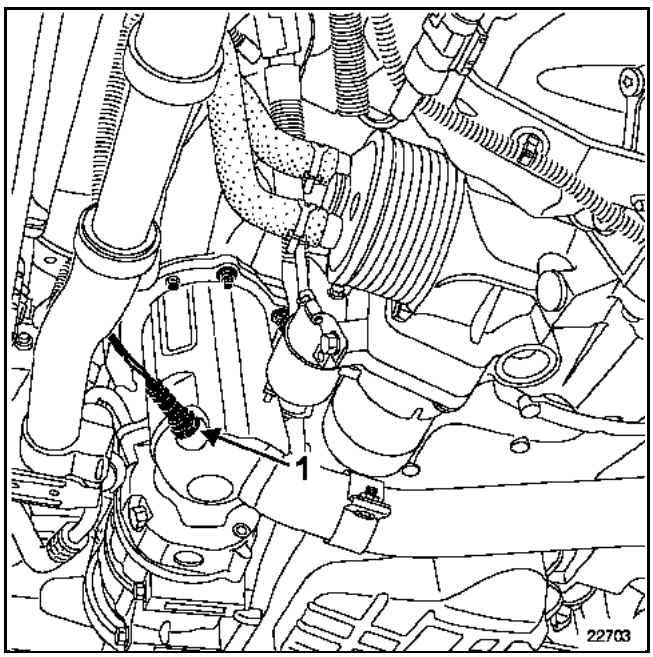

– the front exhaust manifold heat shield,

– front catalytic pre-converter mounting bracket (2),

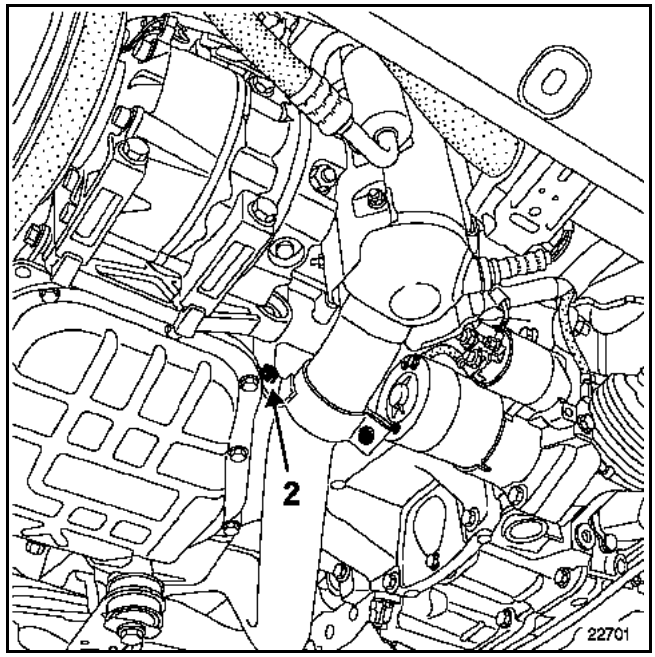

– pre-converter mounting bolts (3).

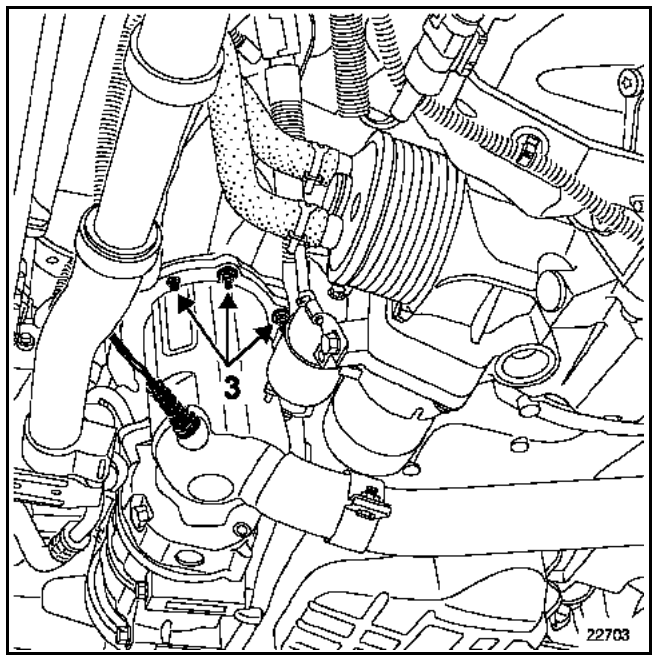

REFITTING

Proceed in the reverse order to removal.

Replace the catalytic pre-converter/converter gasket with a new one.

GETtheMANUALS.org

TIGHTENING TORQUES (in daNm)	
Oxygen sensors	4.4
Catalytic converter/pre-converter flange nut	2.1
Catalytic pre-converter bolts	2.1

REMOVAL

Removal of the catalytic pre-converter requires the removal of the front catalytic pre-converter (see **Section 19 Exhaust: Front catalytic pre-converter**) and the right-hand driveshaft (see **Section 29A Transmission: Driveshaft**).

Disconnect the oxygen sensor.

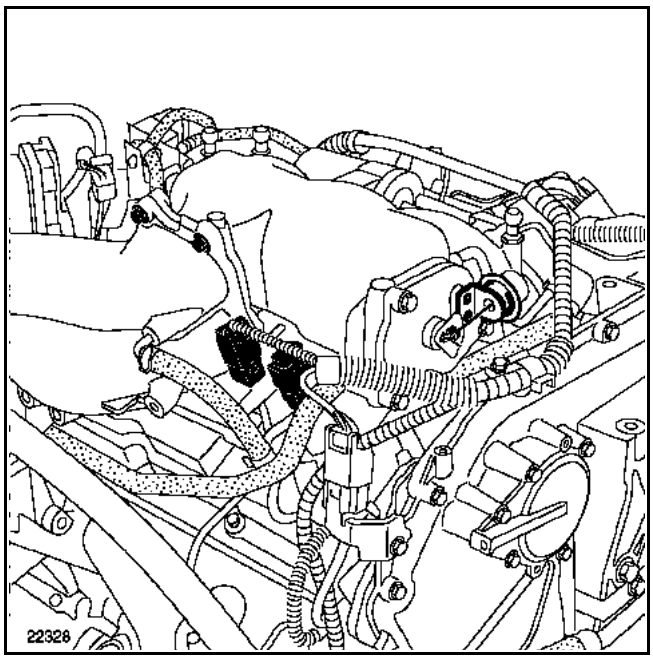

Remove:
– the driveshaft bearing,
– the engine tie-bar mounting,
– catalytic pre-converter/converter bolts (1),
– catalytic converter bracket (2),

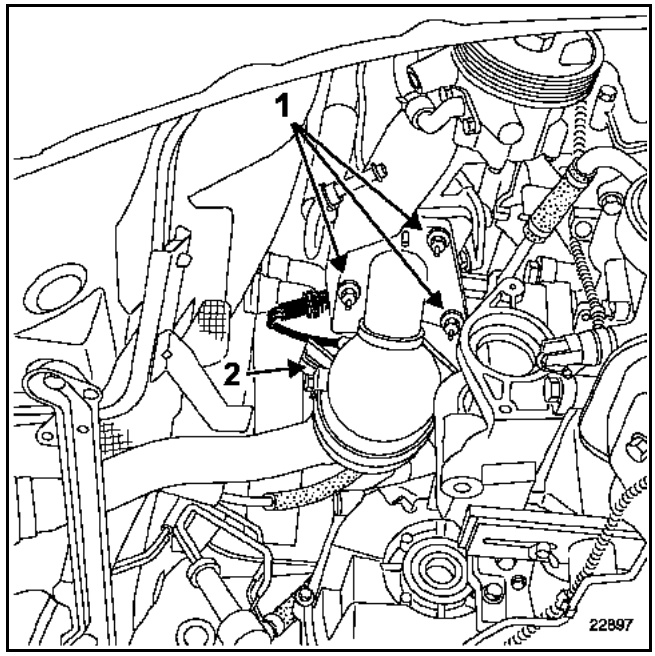

– the two catalytic pre-converter/converter nuts (3).

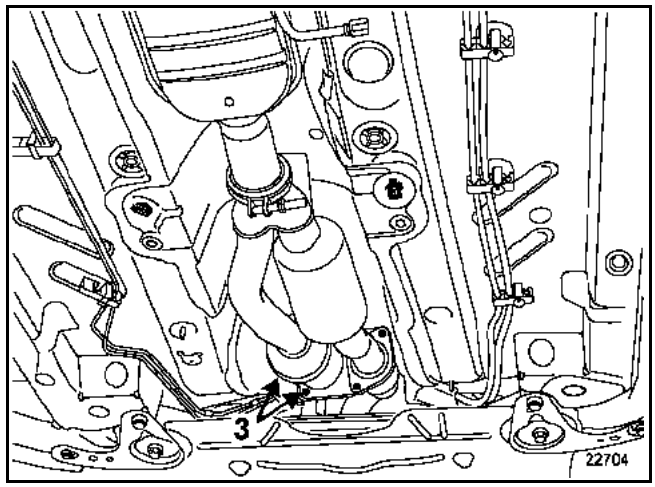

REFITTING

Refit:
– the catalytic converter/pre-converter flange nuts,
– rear exhaust manifold/catalytic pre-converter bolts.

Replace the gasket with a new gasket.

GETtheMANUALS.org

TIGHTENING TORQUES (in daNm)	▽
Shield mountings	2.1
Studs	0.7
Exhaust downpipe mounting nuts	2.1
Pre-converter stay mountings	2.1
Catalytic pre-converter bracket mountings	2.1

REMOVAL

Put the car on a two-post lift.

Remove the engine covers.

Disconnect the battery.

Remove:
– heat shields (1),

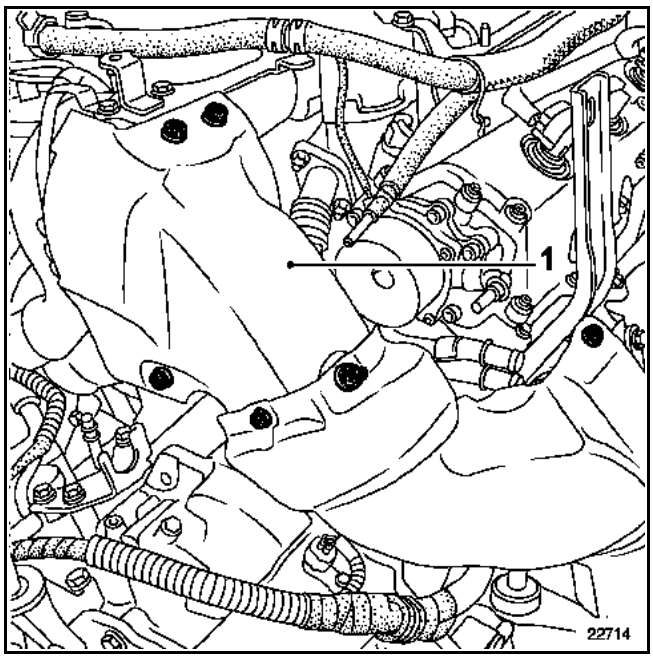

– exhaust downpipe mountings (2),

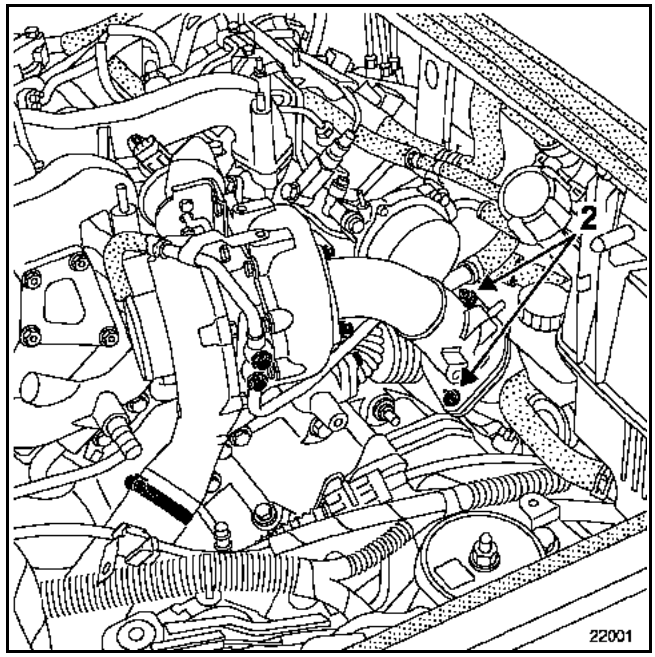

– the catalytic converter (see the operation concerned).

Release the heat shield backwards. To do this, remove:
– heat shield retaining plate mountings (3),
– the retaining plate,
– the four heat shield retaining clips (4).

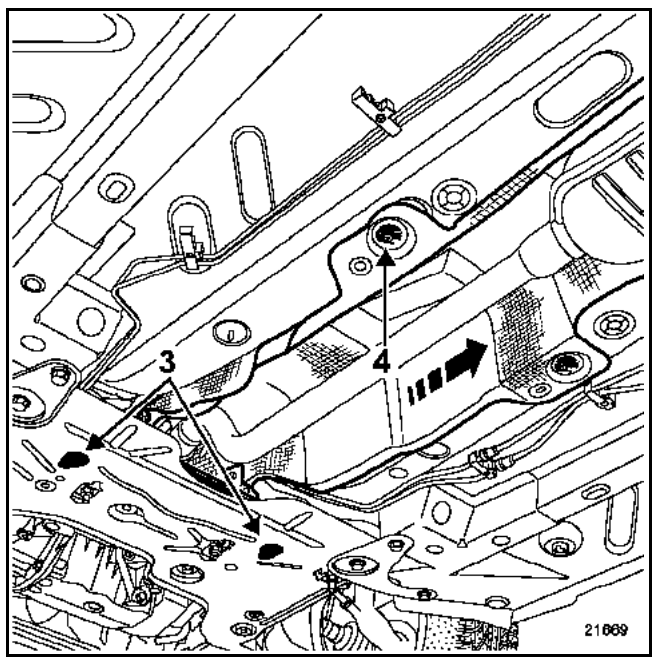

GETtheMANUALS.org

Unclip the gearbox control cable on the heat shield.

Remove:
– the heat shield,
– the catalytic pre-converter stay (5) and plate (6),
– the pre-converter.

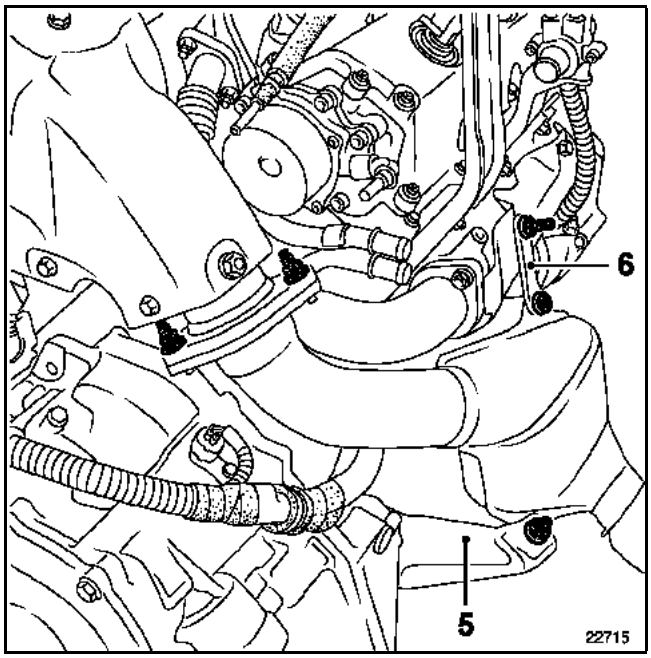

REFITTING

Refitting is the reverse of removal.

Replace the seals.

GETtheMANUALS.org

SPECIAL TOOLING REQUIRED
INTERCO pneumatic siphoning pump, for petrol or diesel tank draining system (see EQUIPMENT catalogue).

IMPORTANT:
During this operation, it is essential to:
– refrain from smoking or bringing incandescent objects close to the work area,
– use suitable protection against petrol splashes caused by the residual pressure in the pipes,
– protect sensitive areas from petrol.

DRAINING THE FUEL TANK (petrol version)

Remove:
– the bench seat squab and the booster cushion (see remove/refit tank),
– the pump-sender unit assembly plastic access cover.

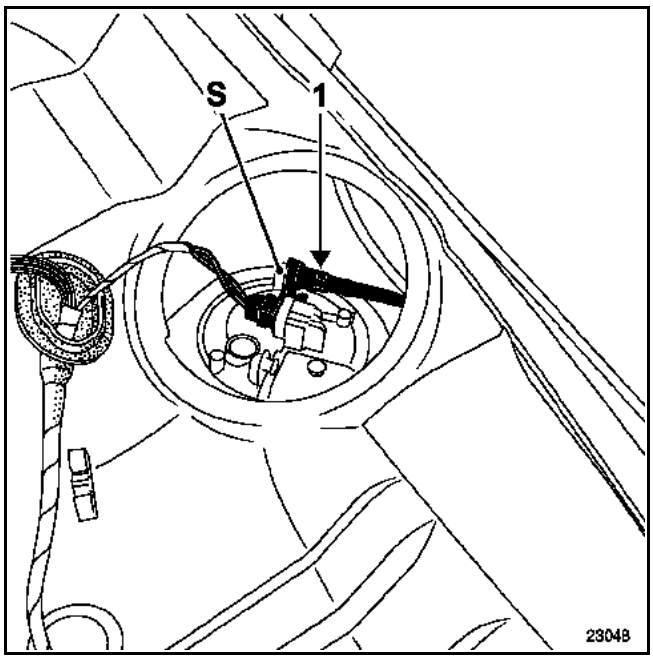

Disconnect the quick-release union (1), and fit to gauge outlet (S) a piece of tubing which is long enough to reach a container outside the vehicle.

In the engine compartment, disconnect the fuel pump relay located in the engine compartment connection unit (relay (A) for **FR4** engine, relay (B) for **V4Y**) engine.

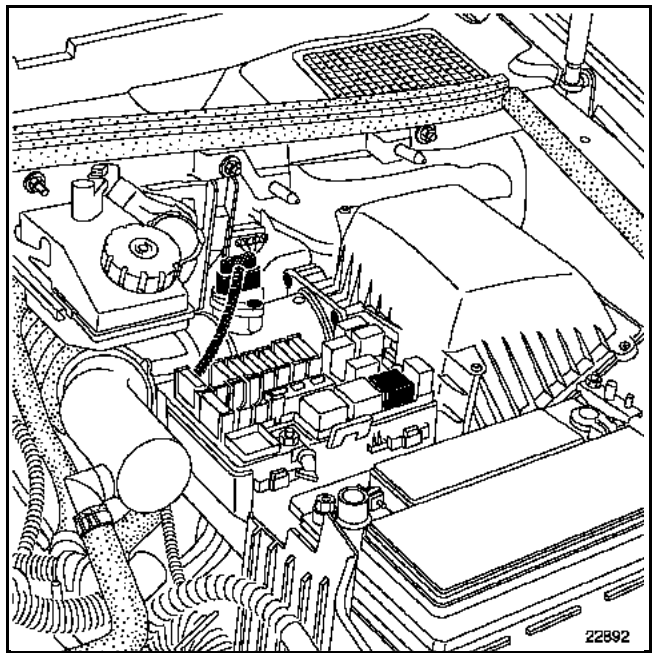

Shunt tracks (3) and (5) and let the fuel flow until it runs out in intermittent jets.

Disconnect the shunt.

Reconnect the relay.

Disconnect the battery.

NOTE: it is also possible to use an **INTERCO** pneumatic decanting pump (see **EQUIPMENT** catalogue).

GETtheMANUALS.org

DRAINING THE FUEL TANK (diesel version)

Since certain diesel versions are not fitted with an electric fuel pump, a manual pump must be used to drain the tank.

For example, you can use the **INTERCO** pneumatic pump (see **EQUIPMENT** catalogue).

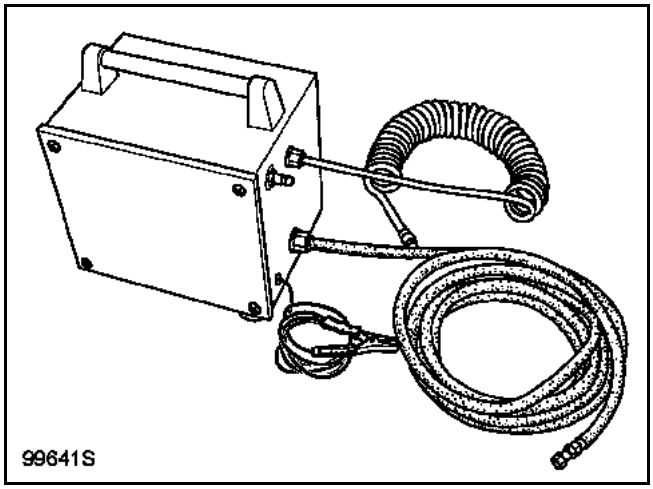

Remove:
– the bench seat squab and the booster cushion (see remove/refit tank),
– the sender plastic access cover.

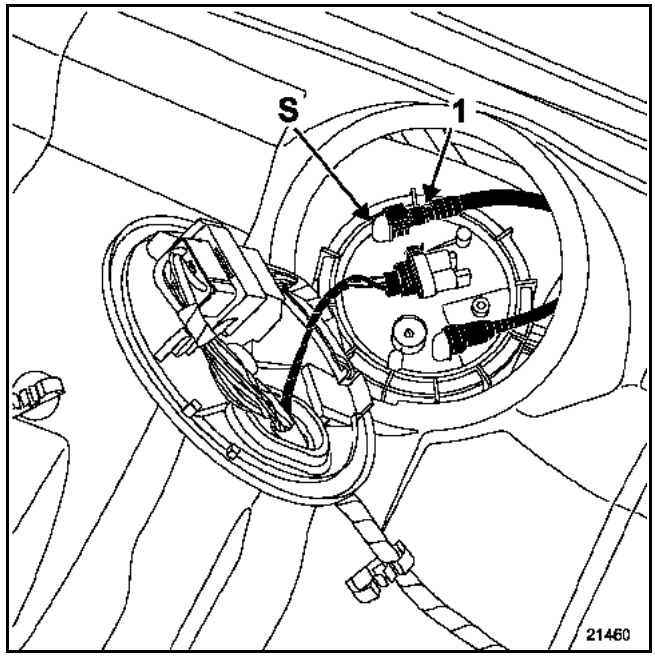

Disconnect the quick-release union (1) and connect the rubber tubing of the pneumatic pump to outlet (S).

Drain the tank.

GETtheMANUALS.org

TIGHTENING TORQUES (in daNm)	
Seat squab securing nuts	**4.4**
Seatback mounting bolt and seat squab booster cushion	**4.4**
Heat shield mounting	**2.1**
Acoustic damping bar	**6.2**
Fuel tank mounting	**2.1**

IMPORTANT:
During this operation, it is essential to:
– refrain from smoking or bringing incandescent objects close to the work area,
– use suitable protection against petrol splashes caused by the residual pressure in the pipes,
– protect sensitive areas from petrol.

NOTE: to access the sender located on the tank, it is necessary to remove the bench seat squab and the seat squab booster cushion.

REMOVAL

Put the vehicle on a two-post lift.

Disconnect the battery.

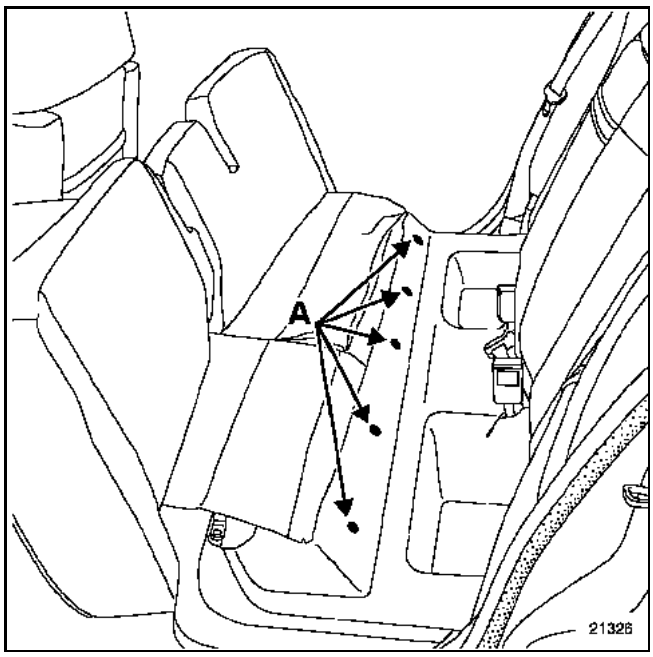

Remove the seat squab of the rear bench seat. To do this, proceed as follows:
– tilt the two bench seat cushions.
– remove the clips (A), then remove the trim.

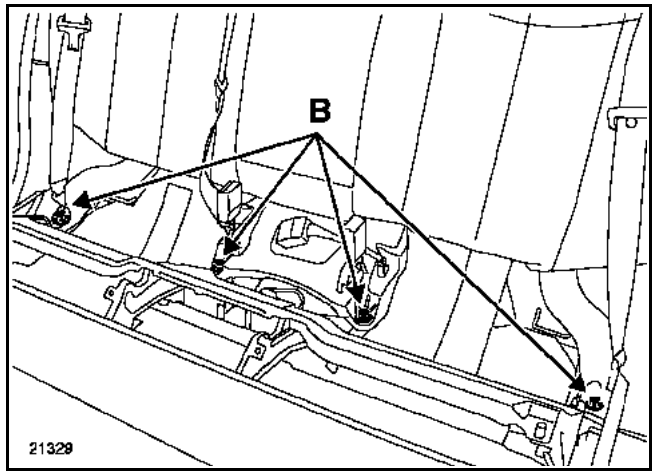

Remove the seatback and booster cushion mountings (B) to the body.

Release the tyre pressure monitor unit without disconnecting the connector (depending on equipment).

Release the seat squab booster cushion.

GETtheMANUALS.org

Remove the pump-sender assembly plastic access cover.

Disconnect:
– the electric parking brake electrical connector (1),
– the electric connector (2),
– the quick-release union(s) (3).

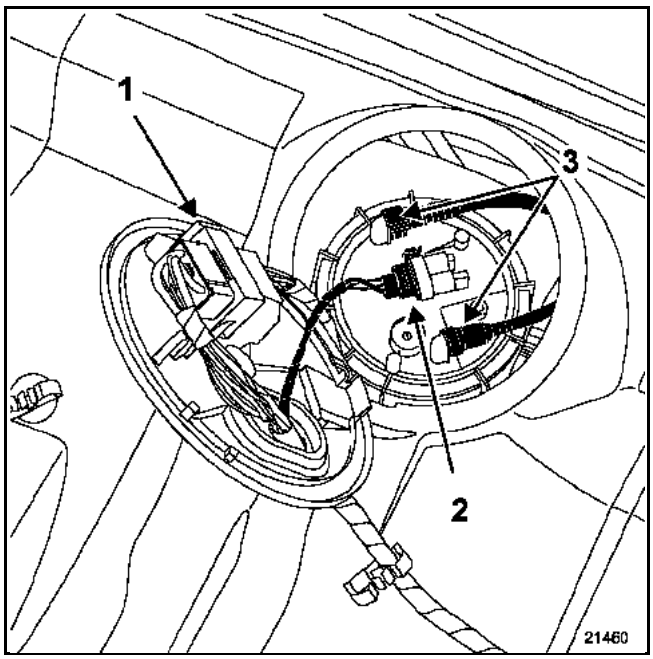

Raise the vehicle.

Remove the offside rear wheel.

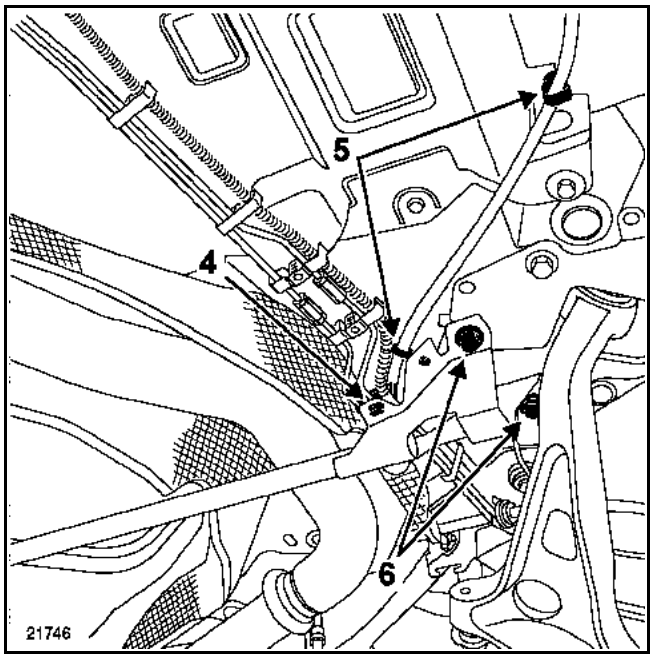

Release:
– the brake pipe clip (4),
– the parking brake cable clips (5).

Remove:
– the acoustic damping bar from the body (6),

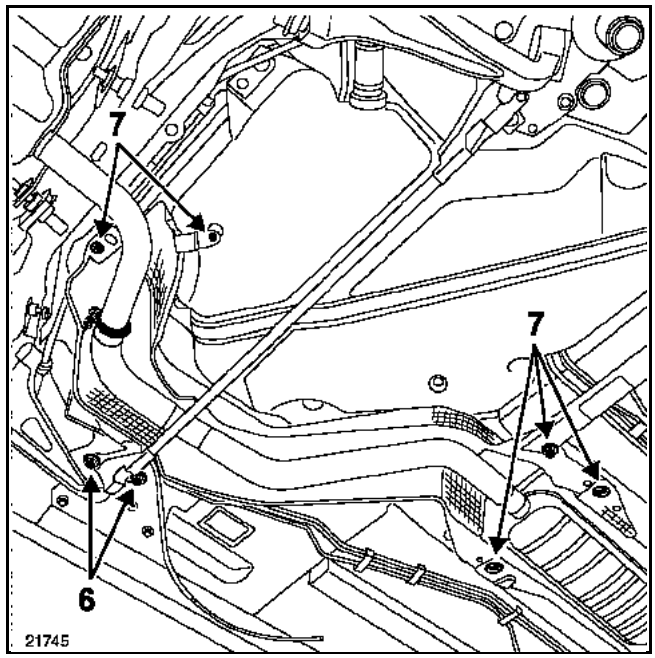

– the intermediate silencer (see operation concerned),
– the heat shield mountings, then remove the heat shield (7).

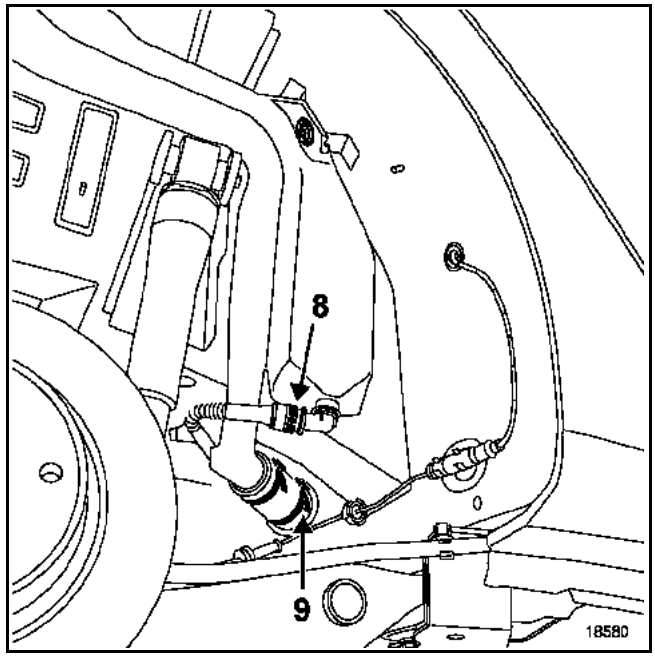

Disconnect the backflow preventer pipe (8).

Remove the filler neck clip (9).

GETtheMANUALS.org

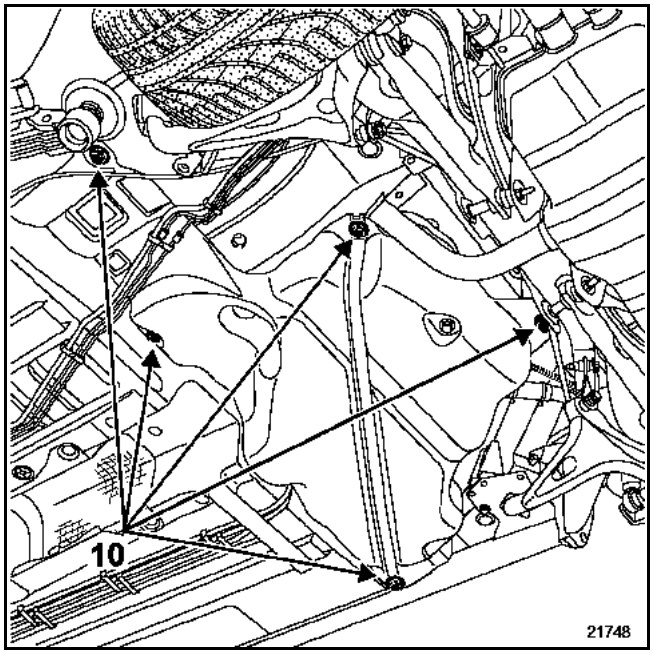

Position the component support.

Remove the fuel tank mountings (10).

With the help of another person, remove the tank, tipping it onto its side.

IMPORTANT: take care not to pull out the brake pipes.

Release:
– the fuel tank electric wiring harness and its conduits,
– the fuel tank.

REFITTING

Proceed in the reverse order to removal, taking care to:
– Observe the tightening torques.
– Replace all the clamps.
– Avoid pinching the pipes.
– Fit the quick release unions by hand and ensure they are correctly latched.
– Refit the heat shield correctly.

GETtheMANUALS.org

SPECIAL TOOLING REQUIRED
Clip-removing pliers

REMOVAL

Disconnect the battery.

Remove:
– the offside rear wheel
– the offside rear wheel arch liner.

Disconnect the backflow prevention pipe (1).

Remove:
– the filler pipe collar (2),
– the filler neck mounting bolt (3),

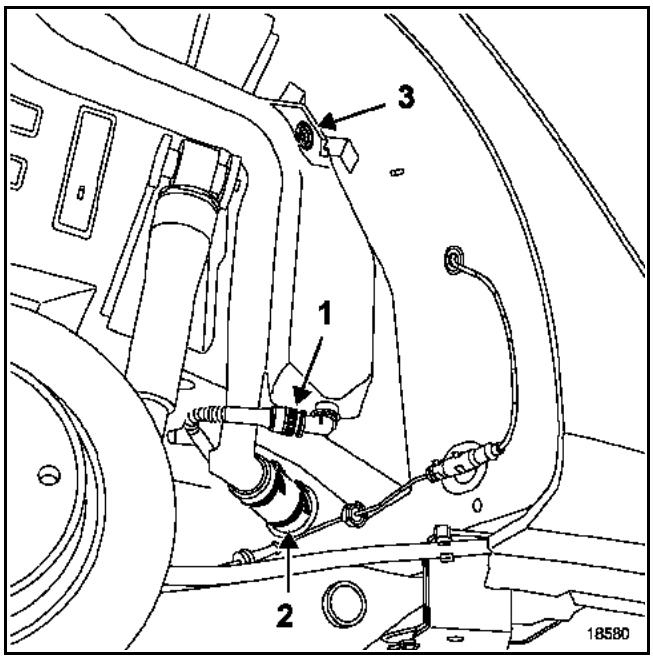

– the filler neck mounting bolts (4),
– the filler neck.

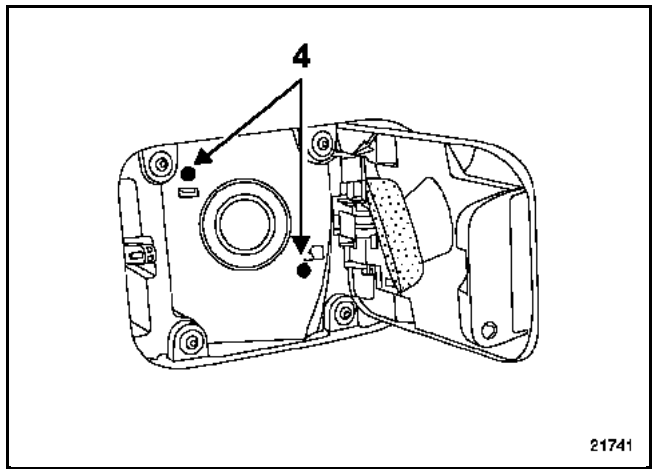

REFITTING

Replace the filler pipe collar with a new one.

Refit in reverse order of removal.

GETtheMANUALS.org

TIGHTENING TORQUES (in daNm)	▽
Seat squab securing nuts	**4.4**
Seatback mounting bolt and seat squab booster cushion	**4.4**
Heat shield mounting	**2.1**
Acoustic damping bar	**6.2**
Fuel tank mountings	**2.1**

IMPORTANT:
During this operation, it is essential to:
– refrain from smoking or bringing incandescent objects close to the work area,
– use suitable protection against petrol splashes caused by the residual pressure in the pipes,
– protect sensitive areas from petrol.

NOTE: it is not necessary to remove the fuel tank to remove the pump-sender assembly. It is accessible from the rear seat. To do this, remove the bench seat seat squab and the seat squab booster cushion (see fuel tank removal operation).

REMOVAL

Remove the pump-sender assembly plastic access cover.

Disconnect:
– the electric parking brake electrical connector (1),
– the electrical connector (2),
– the quick-release union(s) (3).

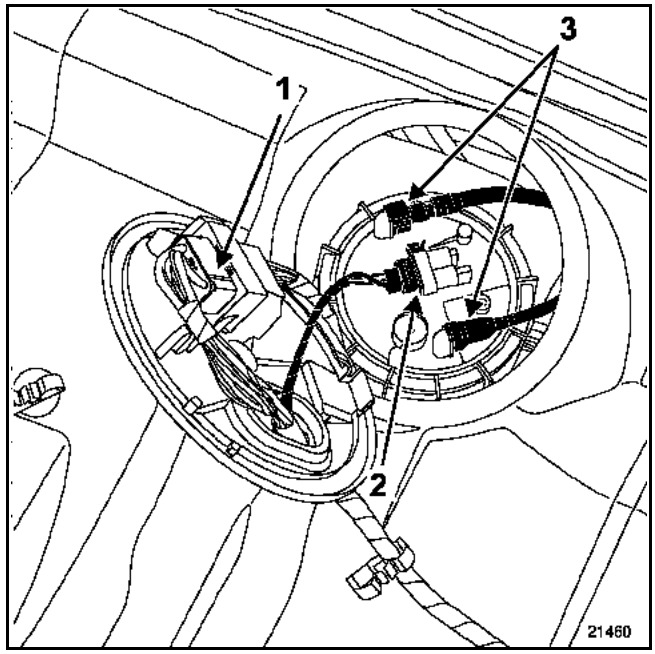

Remove the sender unit mounting nut using tool **Mot. 1397** tool.

Allow any fuel in the sender unit to drain, then remove the pump-sender assembly, taking care not to damage the float.

NOTE: if it is anticipated that there will be several hours will elapse between removal and refitting of the pump-sender assembly, screw the nut back on the fuel tank to prevent any distortion.

REFITTING

Replace the O-ring seal.

Replace the pump-sender assembly, positioning the mark on the sender opposite the three raised lines on the tank.

GETtheMANUALS.org

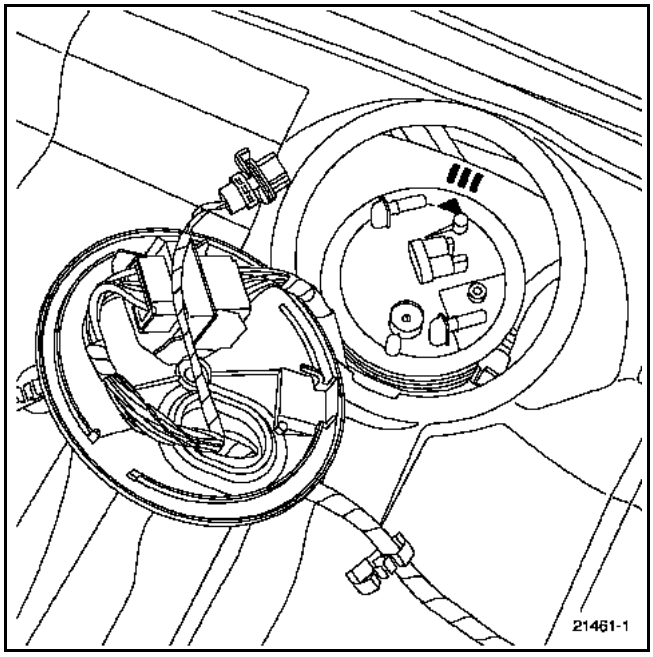

Position the nut and tighten it until the mark on it corresponds with the mark on the tank and the mark on the pump/sender assembly.

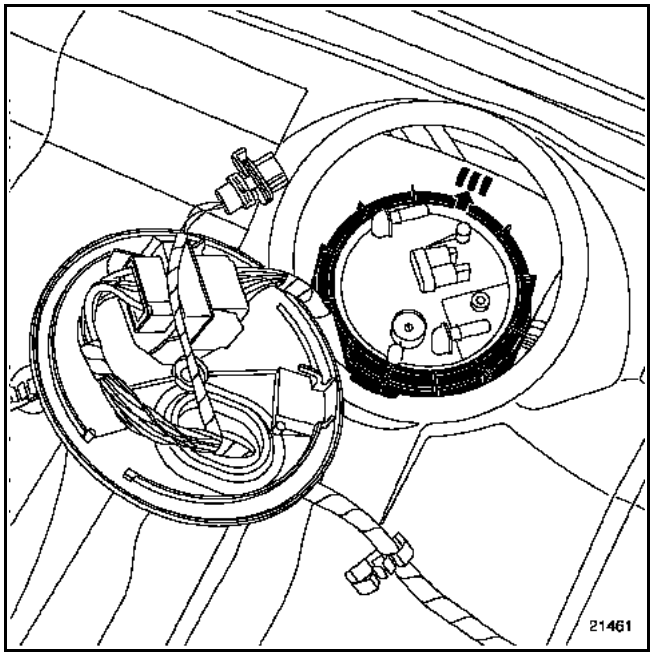

Reconnect the quick-release unions.

Reconnect the electrical connectors.

Refit:
– the plastic blanking cover,
– the seat squab booster cushion, then the seat squab

ALLOCATION OF CONNECTOR TRACKS

Fuel pump-sender unit assembly

Track	Description
A1	Sender + signal
A2	Not used
B1	Sender - signal
B2	Not used
C1	+ pump
C2	- pump

GETtheMANUALS.org

In the petrol version, the pump, the fuel filter and the pump and sender unit form an inseparable assembly.

In diesel versions, the **PX9** engine has no submerged pump in the tank, only a sender unit. Conversely, the **G9T** engine has a pump immersed in the fuel tank.

To remove the sender, refer to the **Pump-sender** section.

Checking the sender unit

Value across terminals A1 and B1 (in Ω) +10 Ω	Height (H) (mm)		Approximate tank capacity (in l)
	Unleaded petrol	Diesel	
20	210	202.5	80
87.5	166.5	159.5	62
155	132	125	44
222	94	88	26
256.3	65	65	17
290	44.5	40	8

Ensure that the resistance varies when the float is moved.

Measuring height H

Place the removed sender unit on a flat surface.
H is the height measured between the sender unit float pin and the sealing face.

NOTE: all the above values are given merely as an indication.

GETtheMANUALS.org

GENERAL

The fuel filter is located inside the tank; it forms part of the pump-sender assembly and cannot be separated.

If it needs to be replaced, then the whole pump-sender assembly must be replaced.

It is designed to provide efficient filtration for the whole life of the vehicle.

Nevertheless, checking the fuel supply pressure and the pump delivery will provide a diagnostic check of the pump-sender assembly performance.

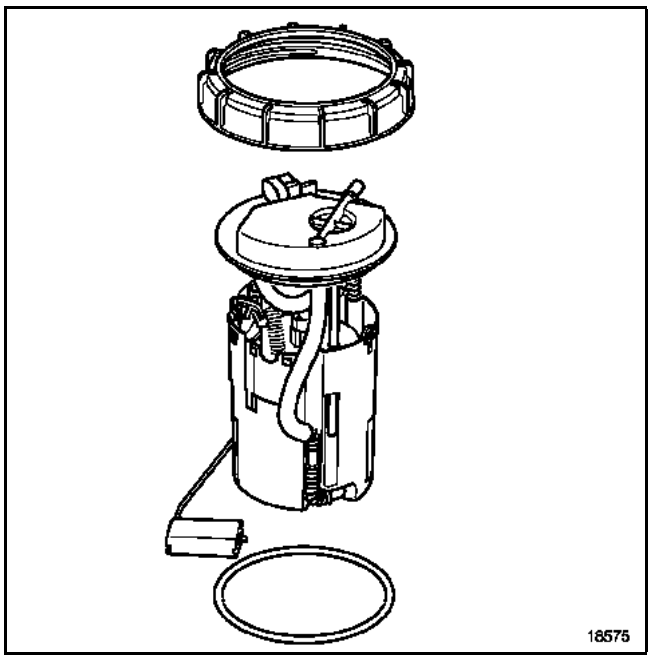

A Filter

GETtheMANUALS.org

TIGHTENING TORQUES (in daNm)

A	2.1
B	4.4
C	6.2
D	10.5
E	18
F	10.5

G	6.2
H	6.2
I	10.5
J	4.4

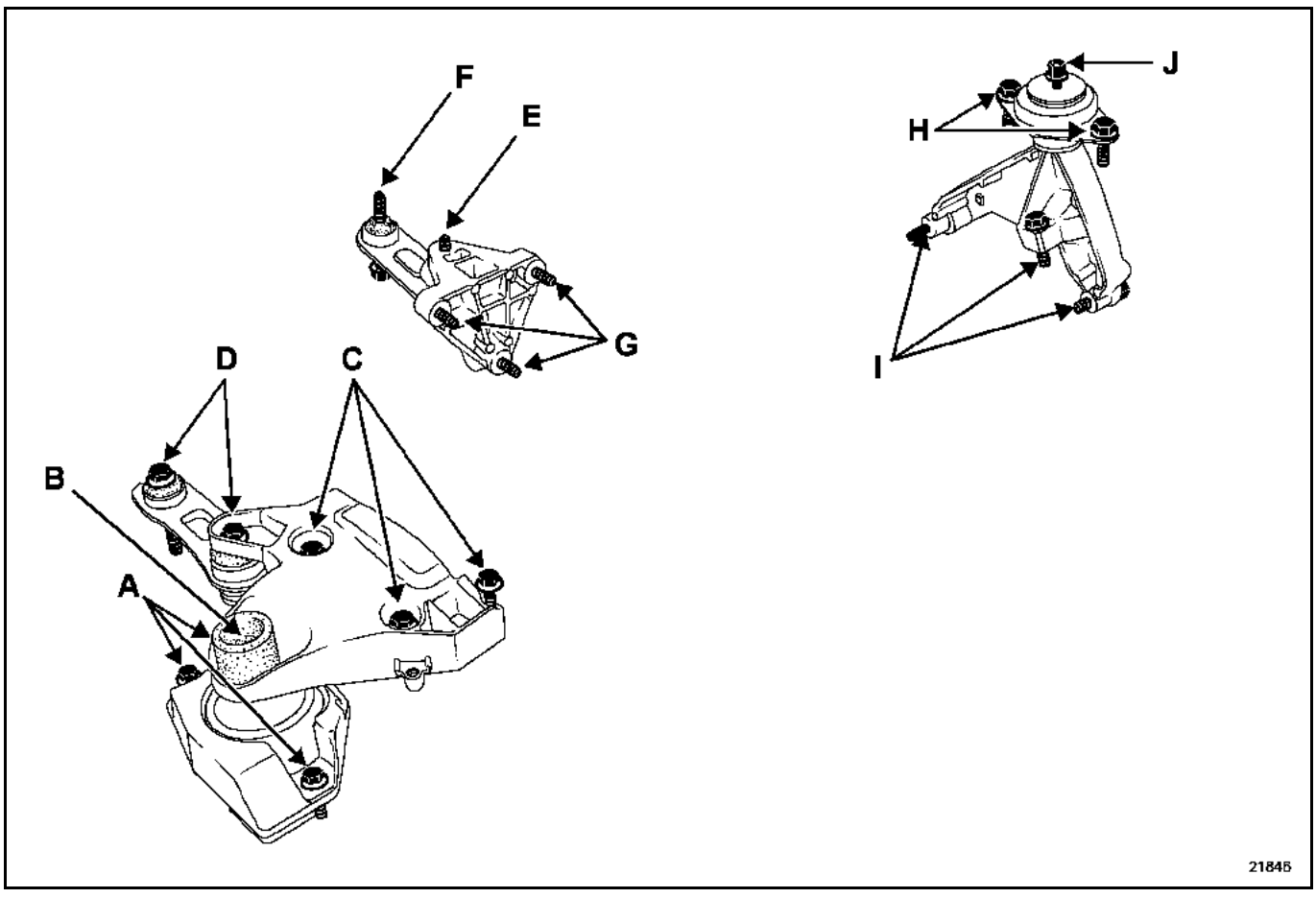

GETtheMANUALS.org

TIGHTENING TORQUES (in daNm)

A	**2.1**
B	**4.4**
C	**10.5**
D	**6.2**
E	**10.5**
F	**18**
G	**10.5**
H	**4.4**
I	**6.2**

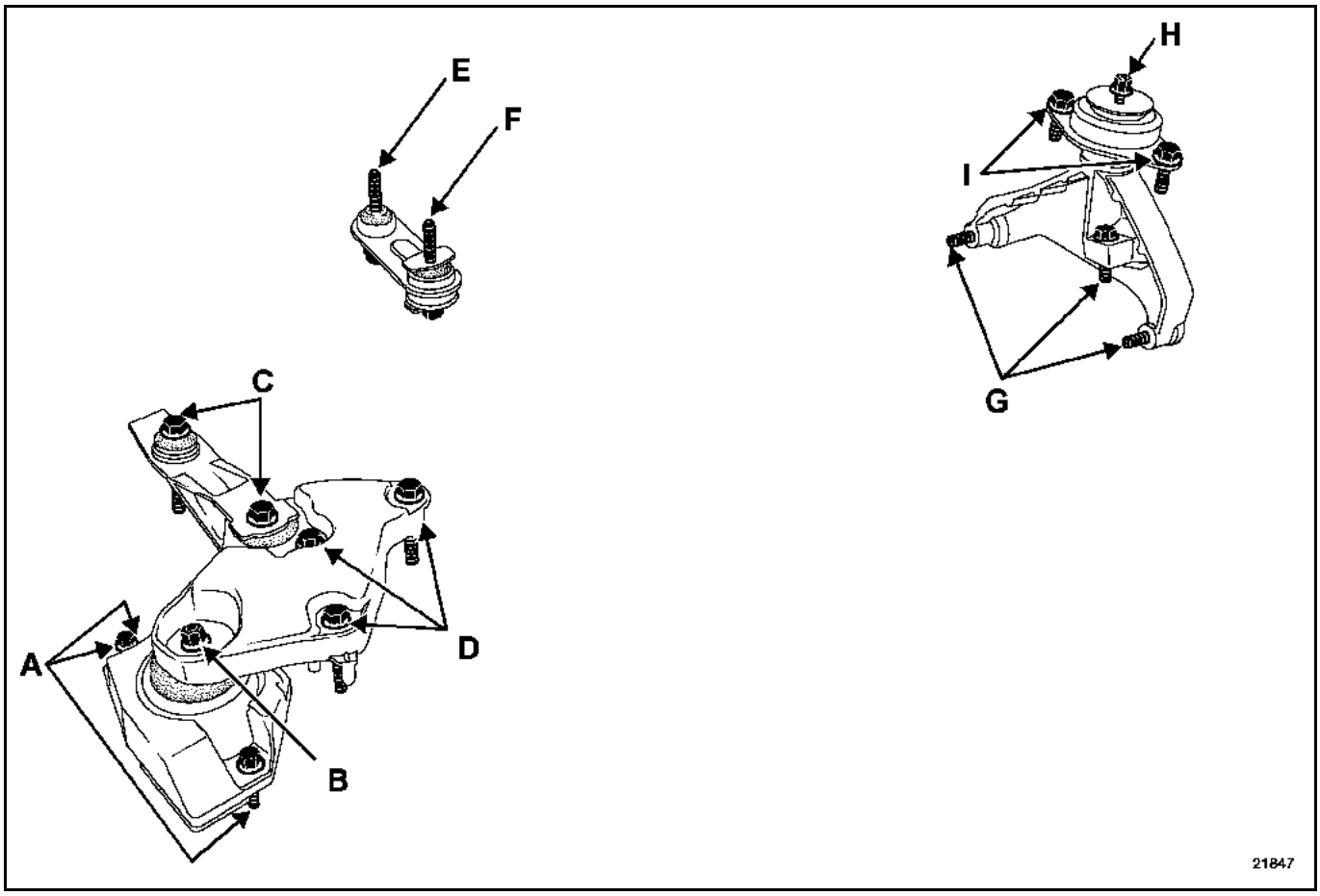

These tightening torques apply to **G9T** engines fitted with a **PK6** manual gearbox.

For the **G9T** fitted with a **SU1** automatic gearbox, only the torque of the gearbox mounting is different: it changes from **10.5** to **6.2 daNm**.

GETtheMANUALS.org

TIGHTENING TORQUES (in daNm)

A	2.1
B	4.4
C	10.5
D	6.2
E	10.5
F	18
G	6.2
H	4.4
I	6.2

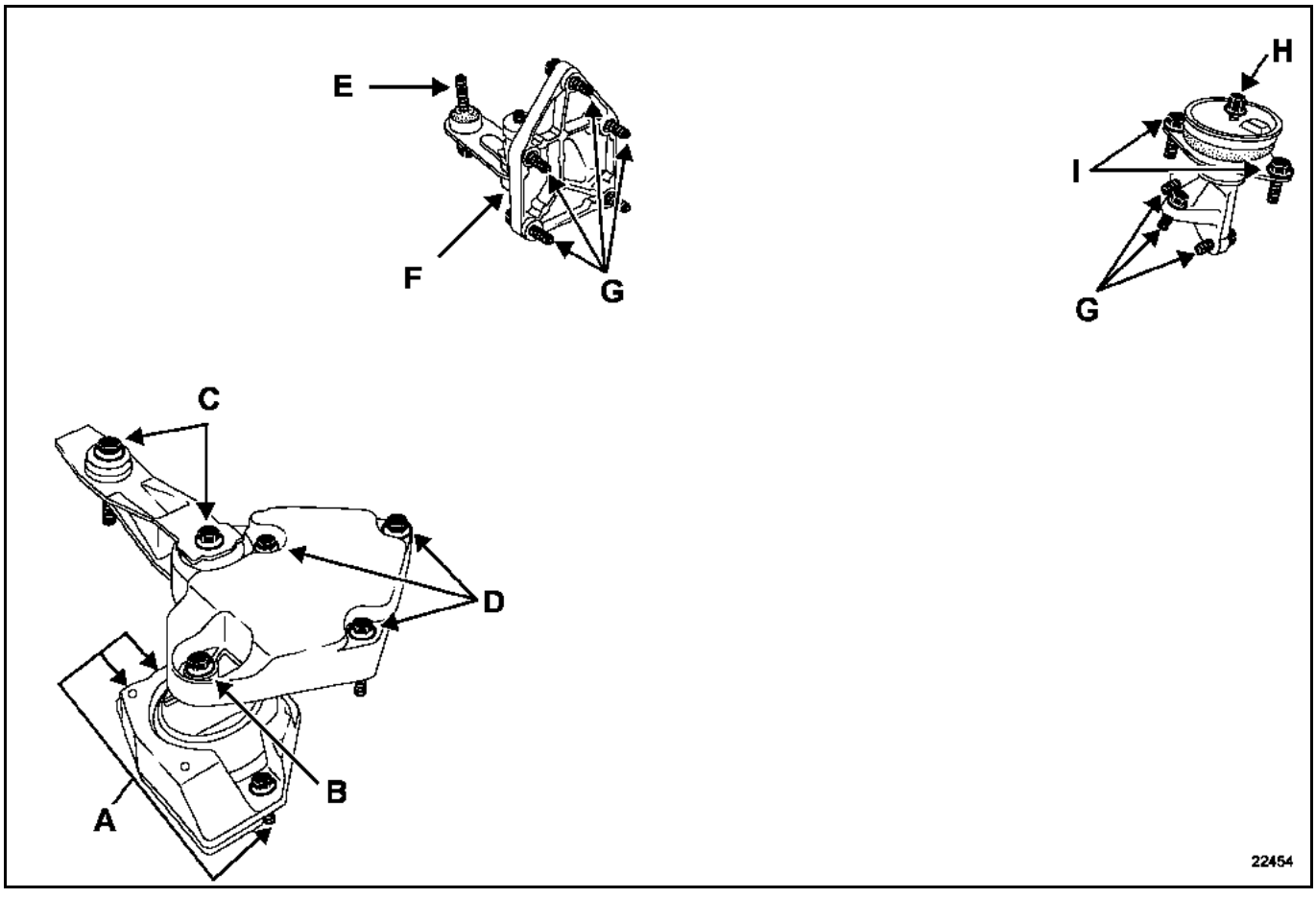

GETtheMANUALS.org

TIGHTENING TORQUES (in daNm)

A	2.1
B	4.4
C	6.2
D	10.5
E	4.4
F	10.5

G	18
H	6.2
I	6.2

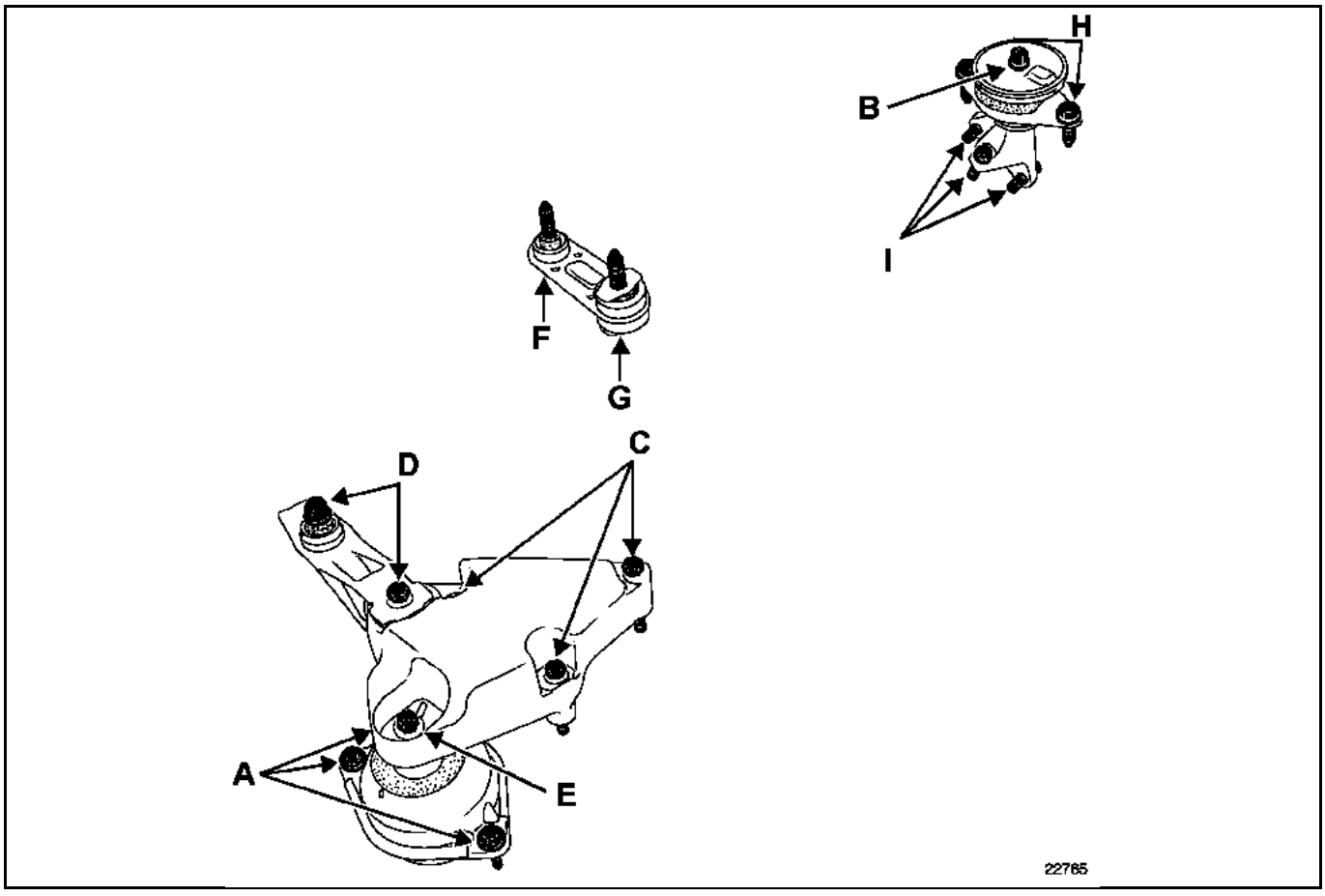

GETtheMANUALS.org

VEL SATIS

2 Transmission

20A CLUTCH

21A MANUAL GEARBOX

23A AUTOMATIC GEARBOX

29A DRIVESHAFT

BJ0E - BJ0J - BJ0K - BJ0P - BJ0V - BJ0M

77 11 311 042 **DECEMBER 2001** **EDITION ANGLAISE**

"The repair methods given by the manufacturer in this document are based on the technical specifications current when it was prepared.

The methods may be modified as a result of changes introduced by the manufacturer in the production of the various component units and accessories from which his vehicles are constructed."

All copyrights reserved by Renault.

Copying or translating, in part or in full, of this document or use of the service part reference numbering system is forbidden without the prior written authority of Renault.

© RENAULT 2001

GETtheMANUALS.org

Transmission

Contents

	Page
20A CLUTCH	
Identification	20A-1
Exploded view	20A-2
Mechanism - Disc	20A-4
Stop	20A-10
Steering wheel	20A-12
Clutch shaft bearing	20A-14
21A MANUAL GEARBOX	
Ratios	21A-1
Lubricants	21A-2
Consumables	21A-3
Parts always to be replaced	21A-3
Special features	21A-4
Gearbox (Removal - Refitting)	21A-5
Clutch shaft lip seal	21A-22
Differential output seal	21A-23

	Page
23A AUTOMATIC GEARBOX	
Identification	23A-1
Gears	23A-2
Use	23A-3
Consumables	23A-4
Parts to be systematically replaced	23A-4
Oil	23A-5
Oil change	23A-6
Topping up - Levels	23A-7
Checking the setting point of the converter	23A-8
Hydraulic distributor	23A-9
Gearbox (Removal - Refitting)	23A-13
Drive plate	23A-22
Differential output seal	23A-24
Converter seal	23A-26
Selector shaft seal	23A-27
Multifunction switch	23A-28
Computer	23A-32
Speed sensor (input)	23A-33
Speed sensor (output)	23A-35
Wiring (bulkhead)	23A-36
Solenoid valves	23A-38
29A DRIVESHAFTS	
Front driveshaft	29A-1

GETtheMANUALS.org

VEHICLE TYPE	ENGINE TYPE	MECHANISM	PLATE
BJ0K	F4R Turbo engine	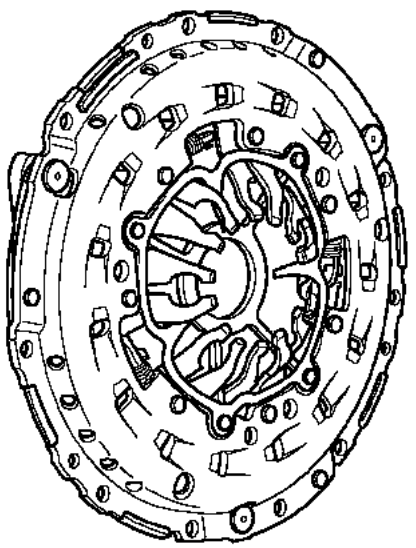 22428	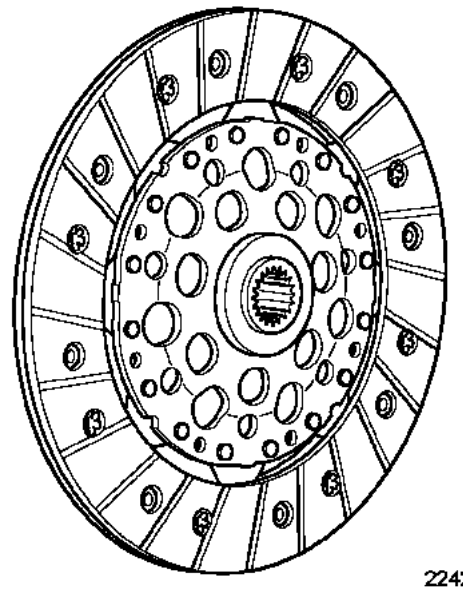 22429
BJ0M BJ0G BJ0F BJ0E	G9T ENGINE	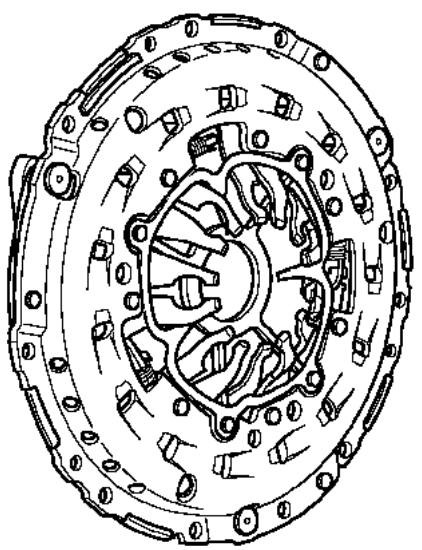 22428	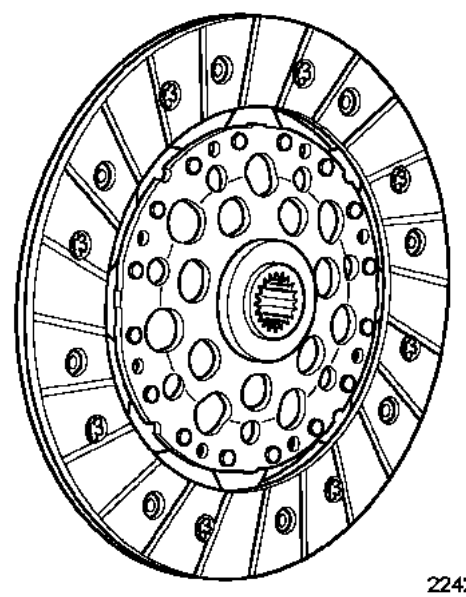 22429

GETtheMANUALS.org

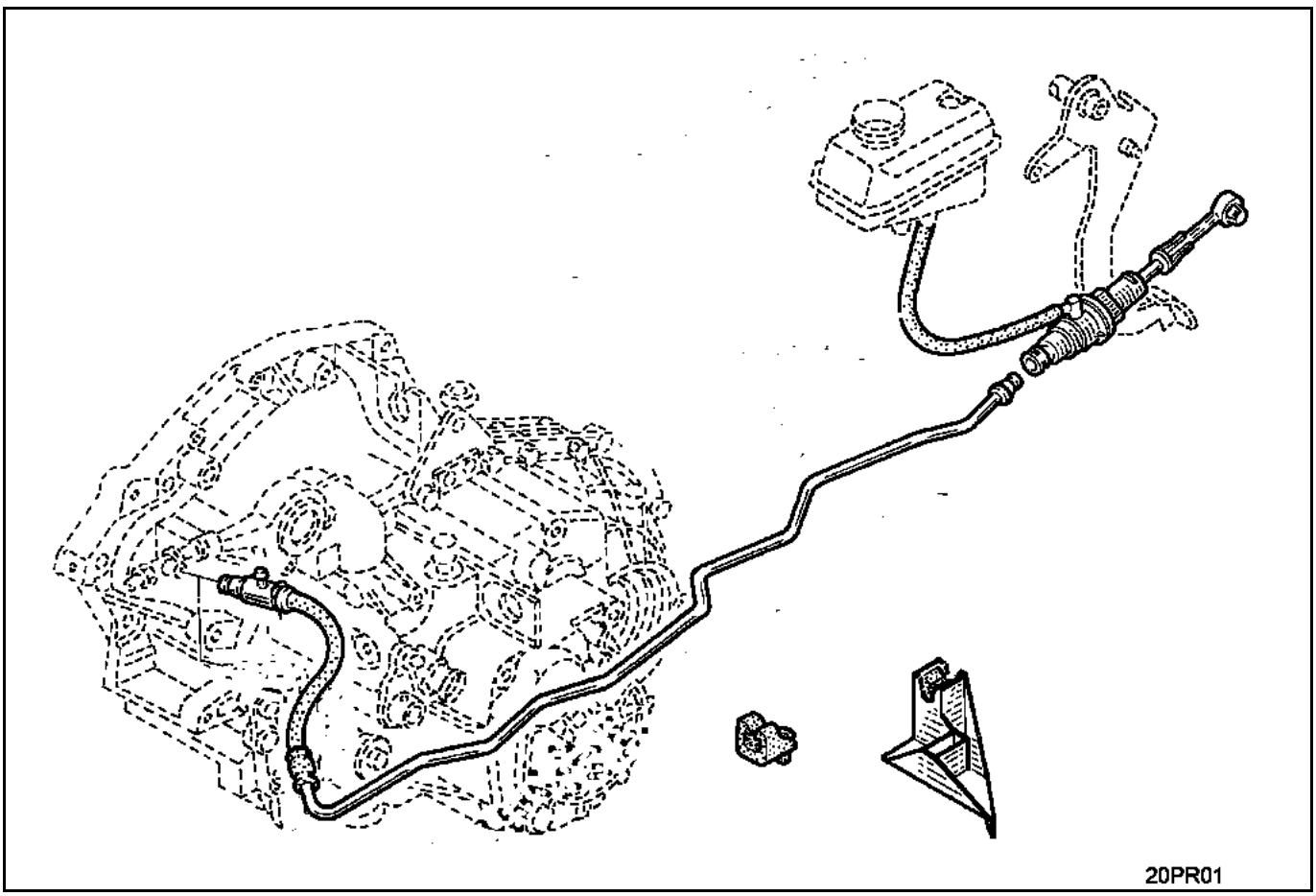

GETtheMANUALS.org

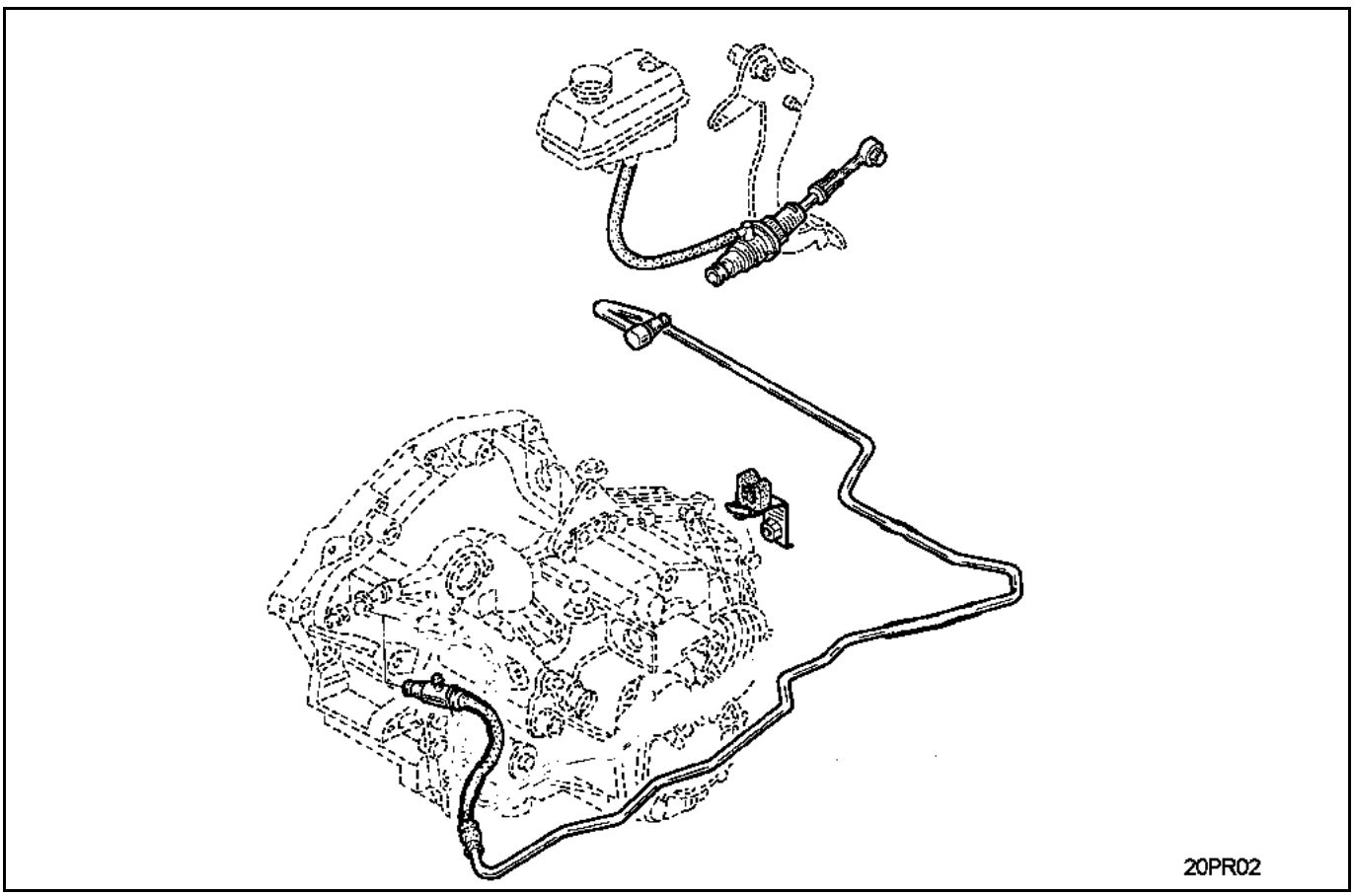

GETtheMANUALS.org

REPLACEMENT

This operation is carried out after removing the sub-frame and disconnecting the gearbox from the engine.

SPECIAL TOOLING REQUIRED	
Mot. 1431	Immobilising tool
Mot. 1453	Engine mountings
Emb. 1604	Self-adjusting clutch mechanism compressors
EQUIPMENT REQUIRED	
Hydraulic jack	

TIGHTENING TORQUES (in daNm)	
Bolt securing the mechanism to the engine flywheel	1.2
Shock absorber bolts	18
Front hub nut	28
Starter motor casing bolt	4.4
Gearbox casing edge bolt to gearbox	4.4
Wheel bolt	11

REMOVAL

Fit the flywheel immobiliser tool **Mot. 1431**.

Remove the mechanism mounting bolts and remove the mechanism along with the clutch plate.

Check and replace any faulty parts.

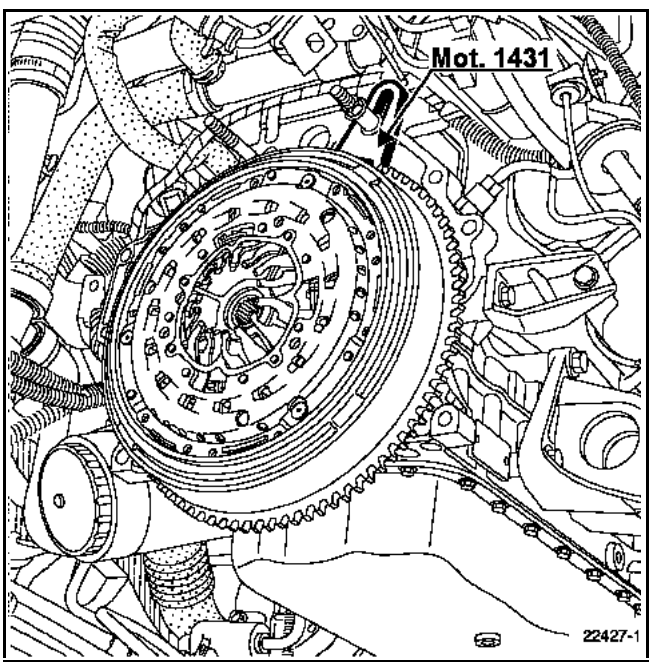

Use tool **Emb. 1604** to refit the mechanism.

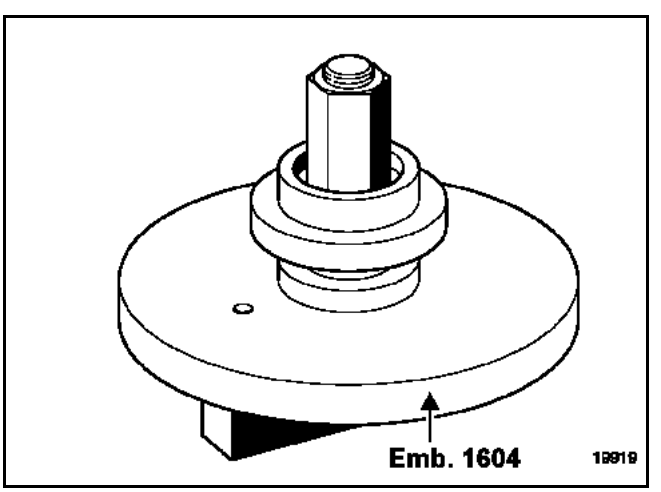

GETtheMANUALS.org

REFITTING

For automatic take-up clutch mechanisms, the clutch mechanism must be compressed with tool **Emb. 1604** in accordance with the method described below.

Place the baseplate of tool **Emb. 1604** in a vice.

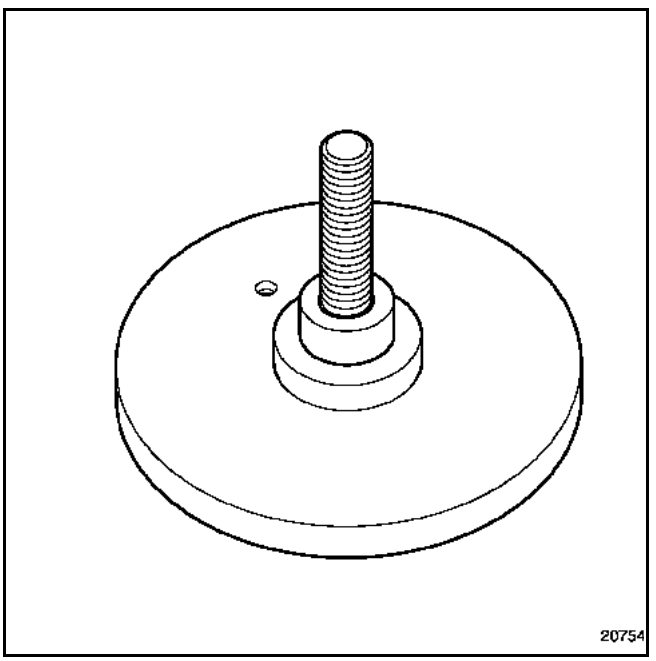

Place the mechanism on the baseplate then the thrust ball bearing (4) and (5).

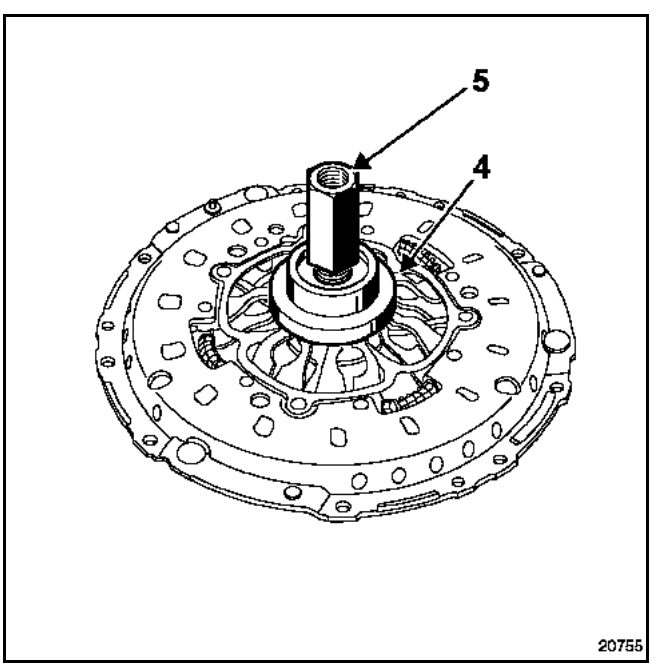

Tighten the nut fully.

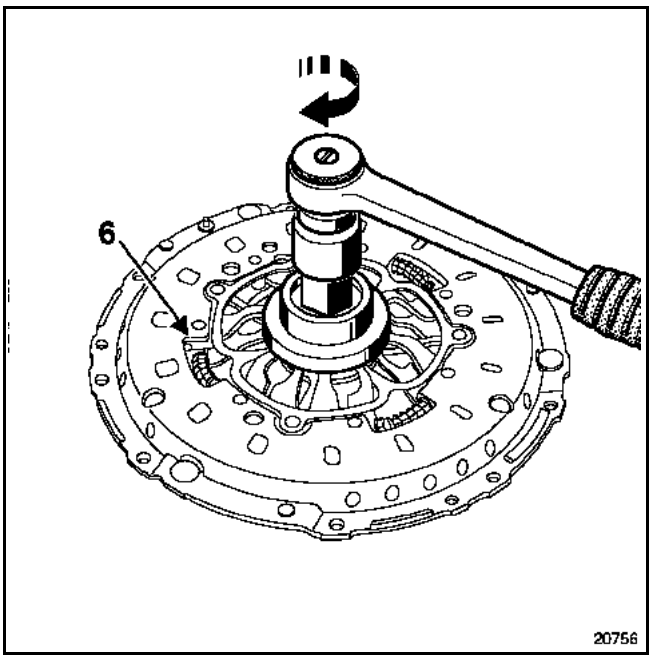

Insert clip pliers in (6).

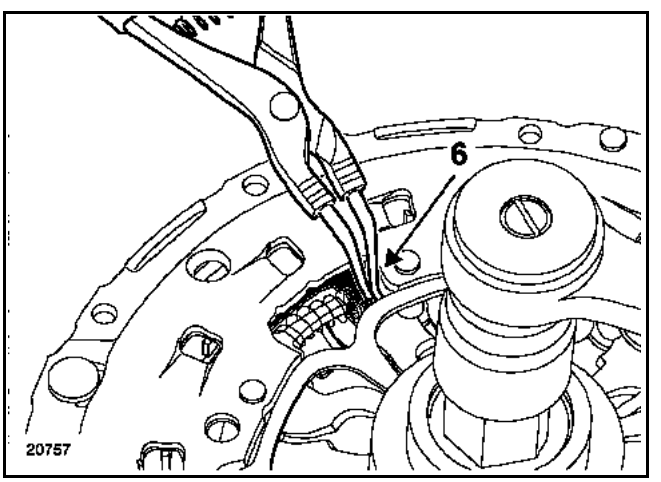

GETtheMANUALS.org

Compress springs (7), and release the mechanism by completely unscrewing nut (6) while maintaining pressure on the springs.

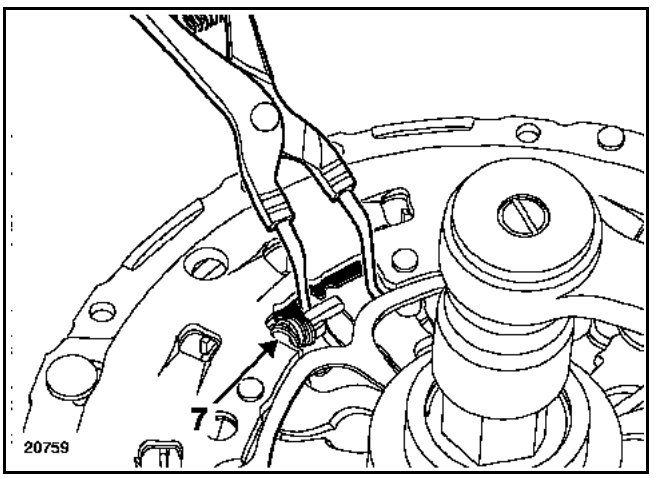

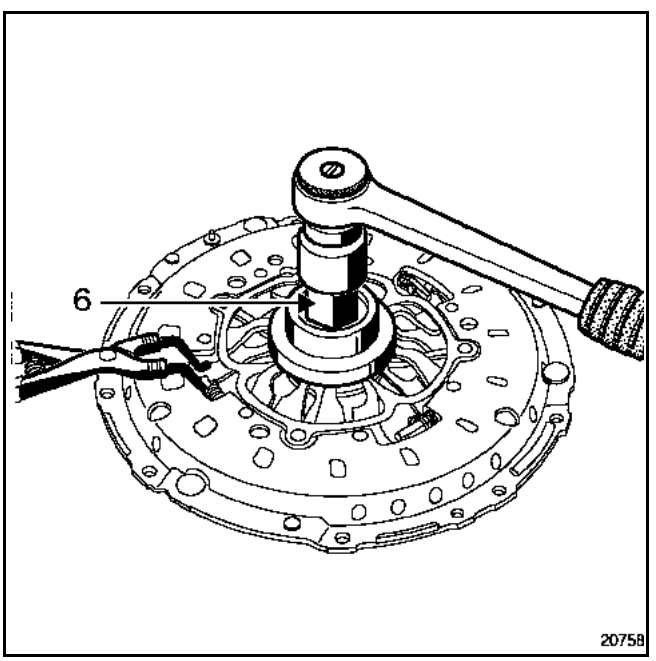

Remove the mechanism from the base plate (checking that the springs are correctly compressed).

Precautions that must be taken when repairing the clutch:

Clean the clutch shaft splines and refit the assembly without lubricant.

Degrease the friction face of the flywheel.

Insert the plate (offset (A) from the hub on the flywheel side).

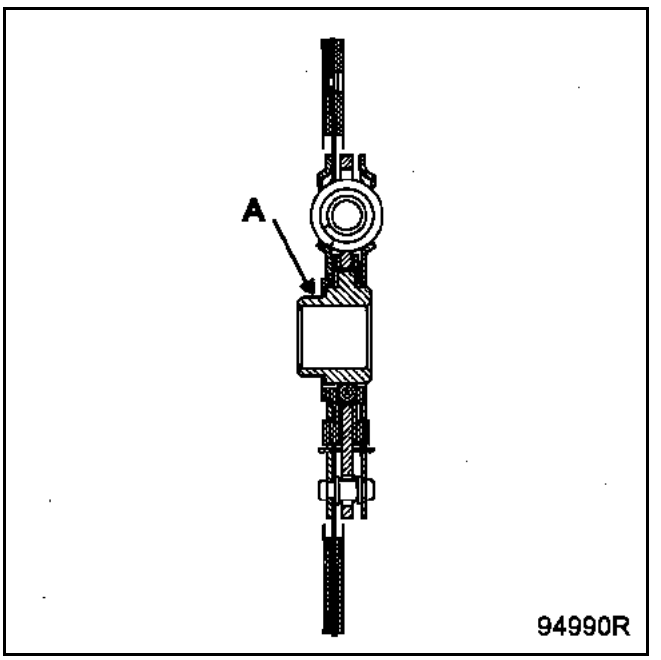

ALIGNMENT

Use the plastic centring tool found in the clutch kit.

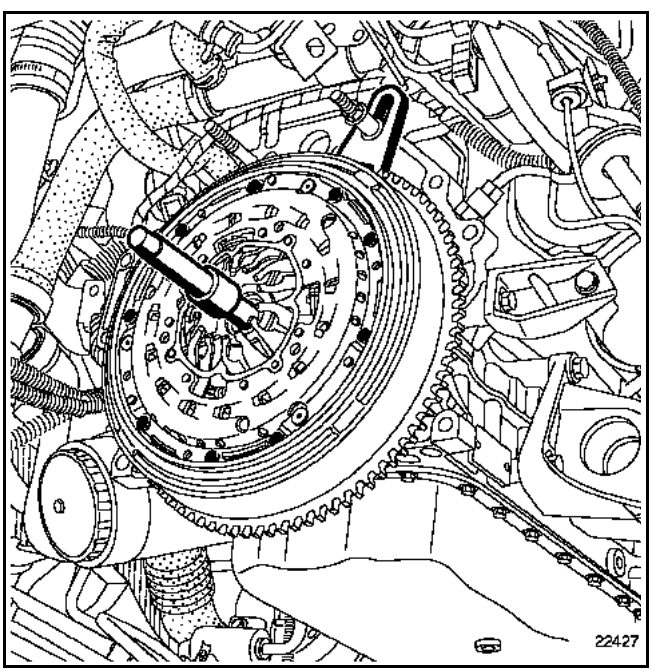

Fit the mechanism back on the flywheel, gradually tightening the bolts to a torque of **1.2 daN.m.**

Remove the immobilising tool **Mot. 1431**.

GETtheMANUALS.org

REPLACEMENT

This operation is carried out after removing the sub-frame and disconnecting the gearbox from the engine.

SPECIAL TOOLING REQUIRED	
Mot. 582-01	Immobilising tool
Mot. 1453	Engine mountings
Emb. 1604	Self-adjusting clutch mechanism compressors
EQUIPMENT REQUIRED	
Hydraulic jack	

TIGHTENING TORQUES (in daNm)	
Bolt securing the mechanism to the engine flywheel	1.2
Shock absorber bolts.	18
Front hub nut	28
Starter motor and casing bolt	4.4
Gearbox casing edge bolt to gearbox	4.4
Wheel bolt	11

REMOVAL

Fit immobilising tool **Mot. 582**.

Remove the mechanism mounting bolts and remove the mechanism along with the clutch plate.

Check and replace any faulty parts.

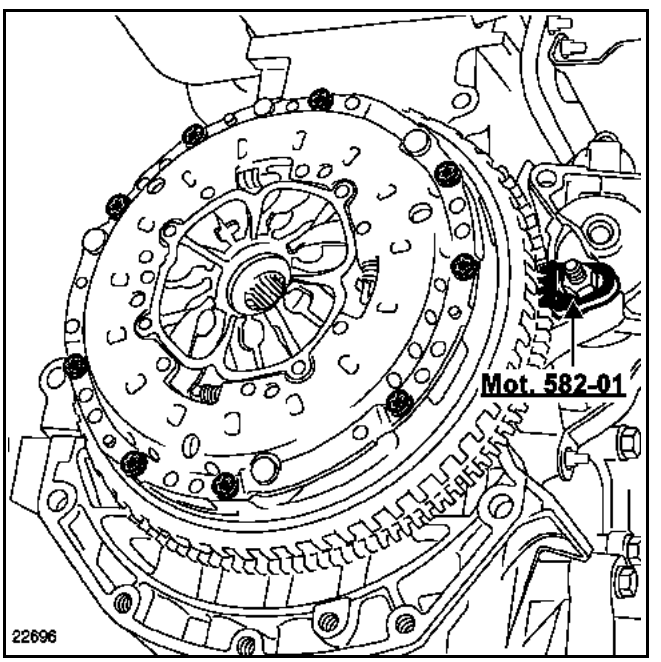

Use tool **Emb. 1604** to refit the mechanism.

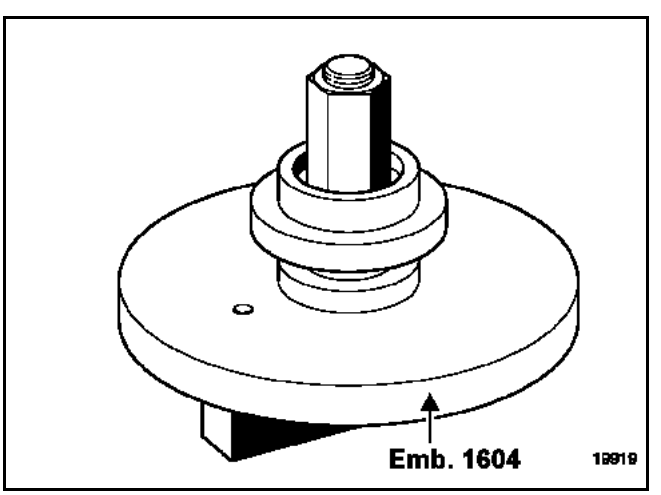

GETtheMANUALS.org

REFITTING

For automatic take-up clutch mechanisms, the clutch mechanism must be compressed with tool **Emb. 1604** in accordance with the method described below.

Place the baseplate of tool **Emb. 1604** in a vice

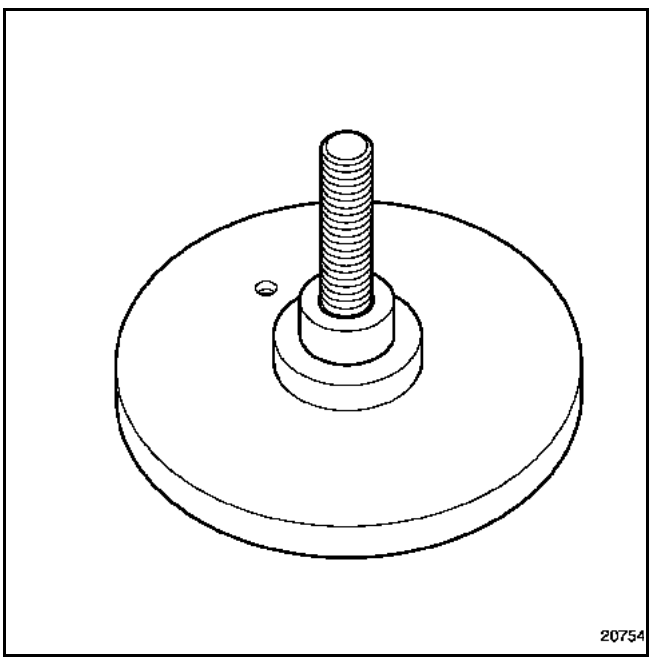

Place the mechanism on the baseplate, then the thrust ball bearing (4) and (5).

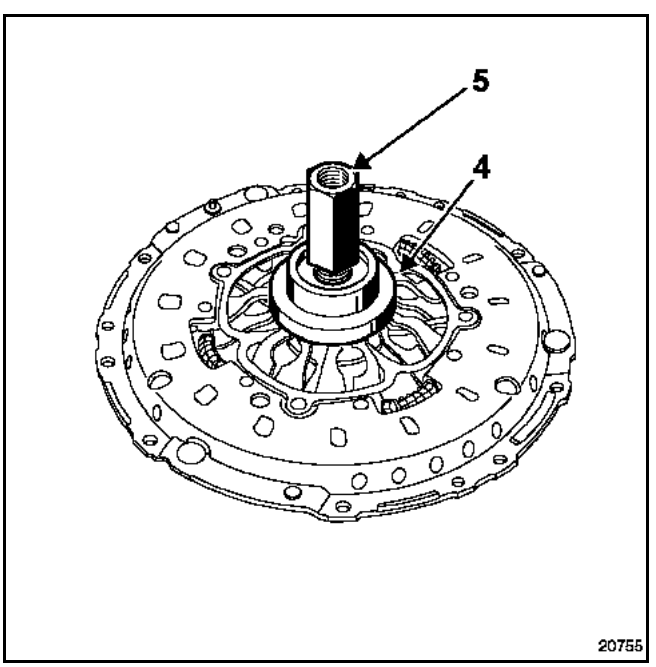

Tighten the nut fully.

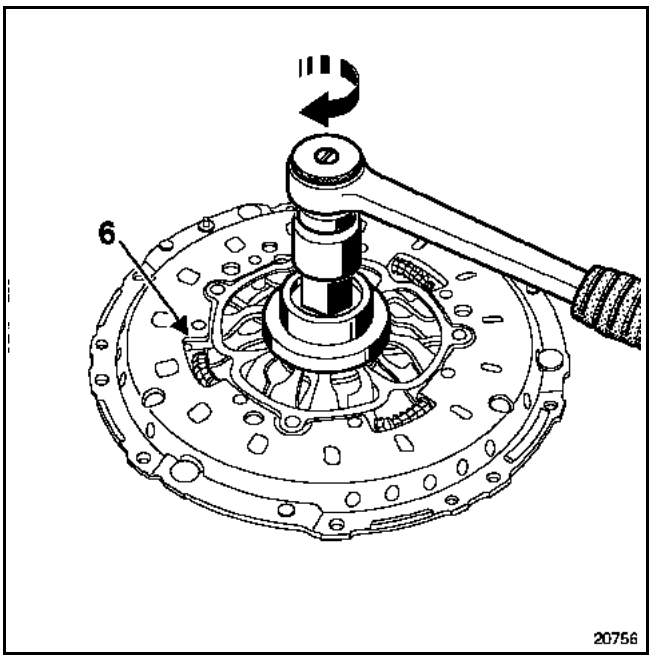

Insert clip pliers in (6).

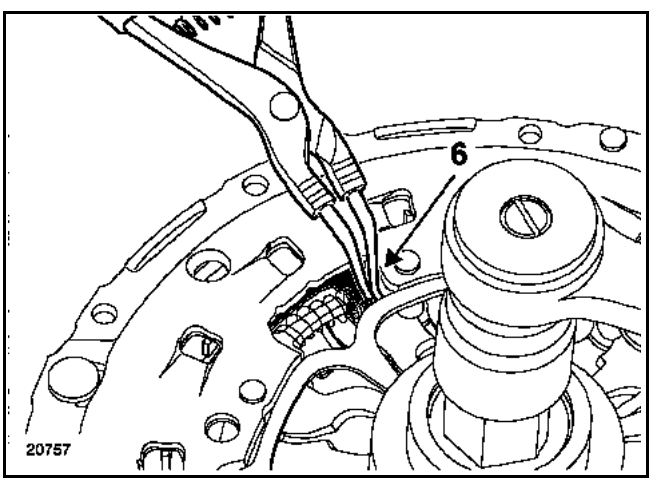

GETtheMANUALS.org

Compress the springs (7), then release the mechanism by completely unscrewing the nut (6) while maintaining pressure on the springs.

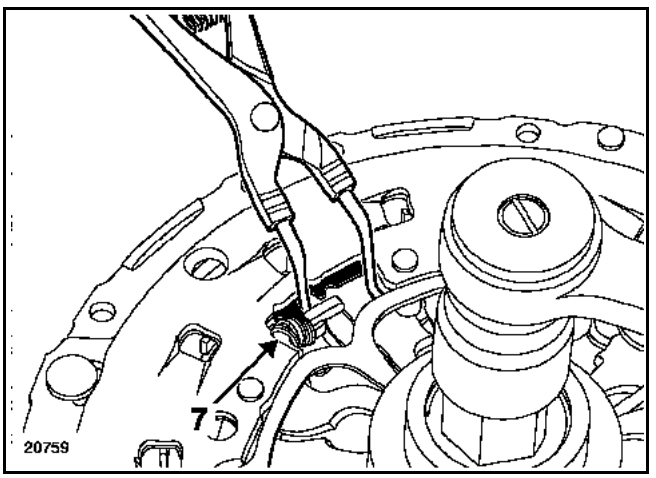

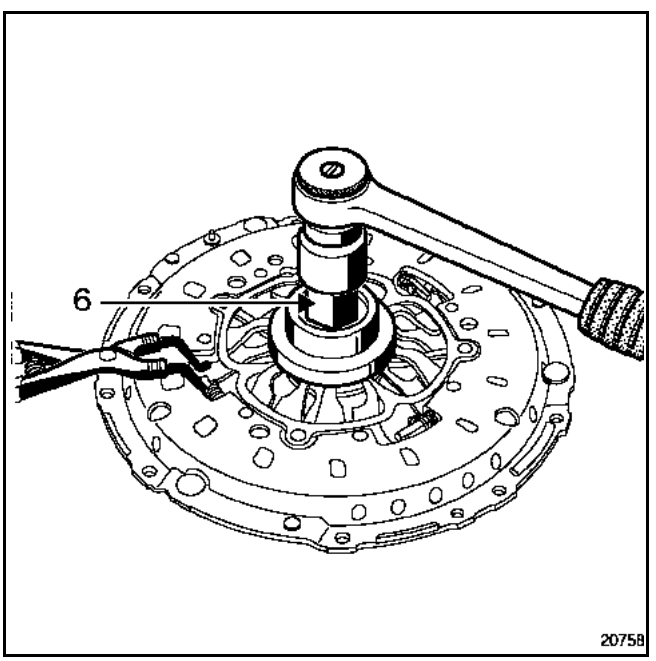

Remove the mechanism from the base plate (checking that the springs are correctly compressed).

Precautions that must be taken when repairing the clutch:

Clean the clutch shaft splines and **refit the assembly without lubricant.**

Degrease the friction face of the flywheel.

Fit the plate (offset (A) from the hub on the flywheel side).

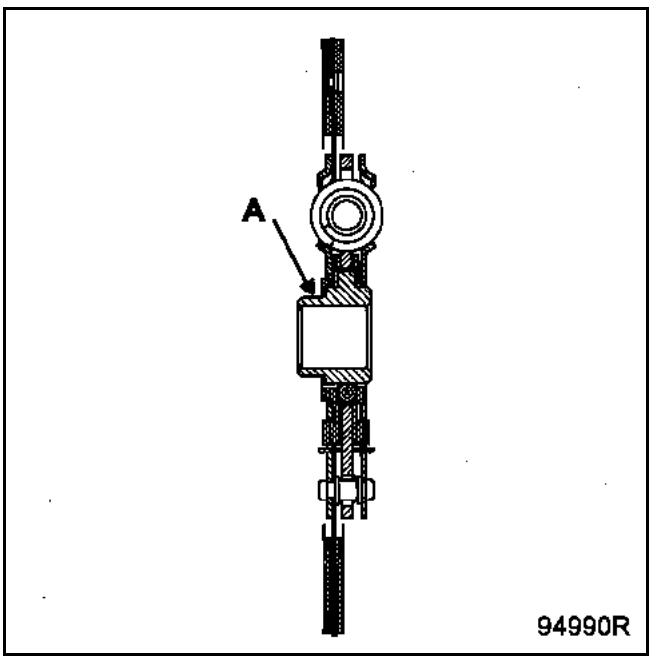

ALIGNMENT

Use the plastic centring tool found in the clutch kit.

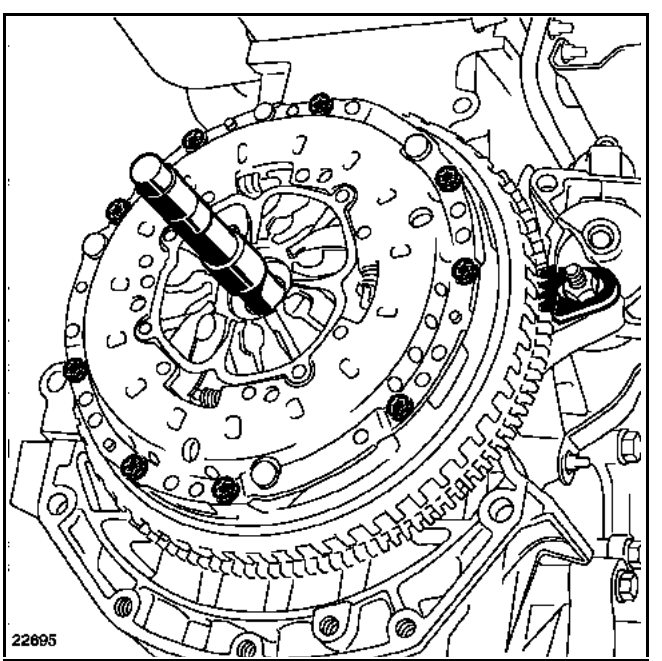

Fit the mechanism back on the flywheel, gradually tightening the bolts to a torque of **1.2 daN.m.**

Remove immobilising tool **Mot. 582-01**.

GETtheMANUALS.org

REPLACEMENT

This operation is carried out after the gearbox has been disconnected from the engine.

REMOVAL

Remove:
– the bleed screw (clip A),
– the thrust bearing (screws B).

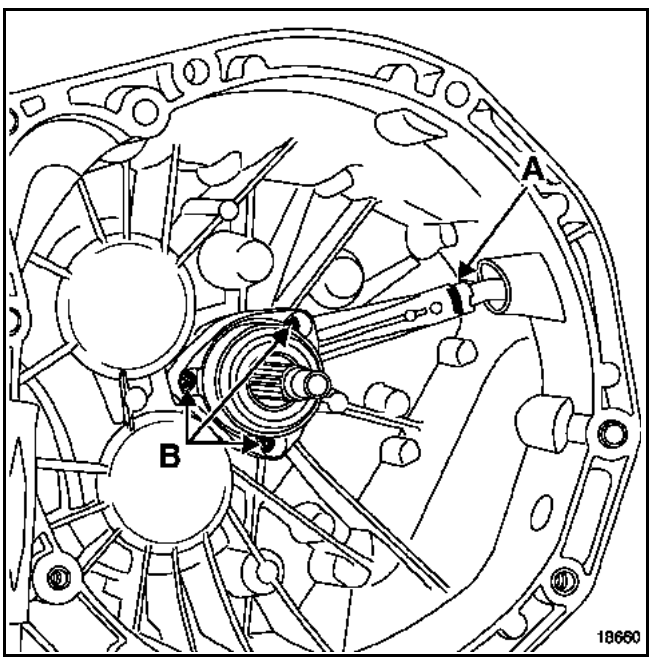

REFITTING

Refit:
– the end stop,
– the bleed screw.

Ensure the thrust bearing slides correctly.

GETtheMANUALS.org

REPLACEMENT

This operation is carried out after the gearbox has been disconnected from the engine.

REMOVAL

Remove:
– the bleed screw (clip A),
– the thrust bearing (screws B).

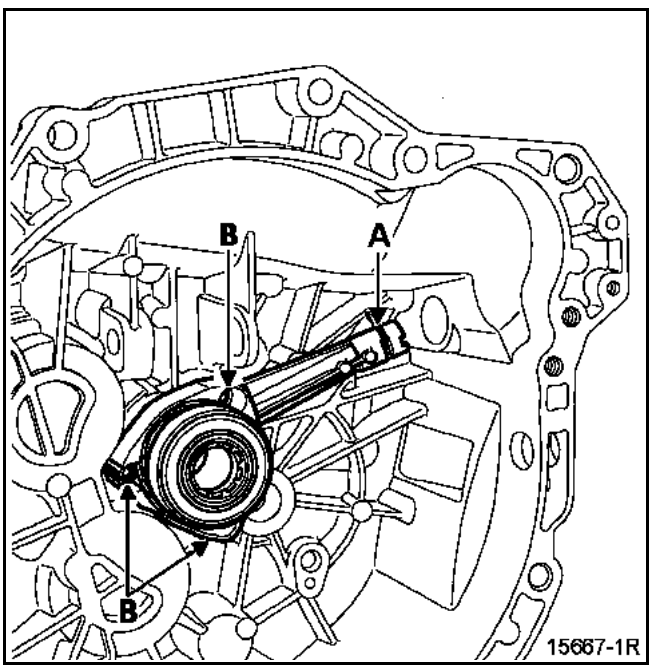

REFITTING

Refit:
– the thrust bearing,
– the bleed screw.

Ensure the thrust bearing slides correctly.

GETtheMANUALS.org

REPLACEMENT

This operation is carried out after the gearbox has been disconnected from the engine and the clutch has been removed.

SPECIAL TOOLING REQUIRED	
Mot. 1431	**Immobilising tool**

TIGHTENING TORQUE (in daNm)	
Flywheel bolts	**6**

REMOVAL

Fit the locking tool **Mot. 1431**.

Replace the flywheel if it has been damaged.

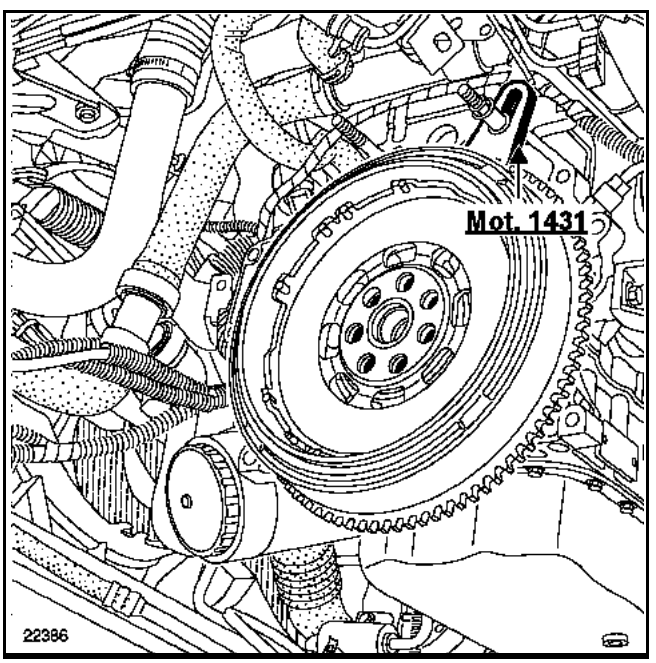

REFITTING

Clean the crankshaft mounting bolt threads

Degrease the bearing face of the flywheel on the crankshaft.

Cement the flywheel bolts using **Loctite FRENETANCH and tighten them to the recommended torque**.

GETtheMANUALS.org

REPLACEMENT

This operation is carried out after the gearbox has been disconnected from the engine and the clutch has been removed.

SPECIAL TOOLING REQUIRED	
Mot. 582-01	Immobilising tool

TIGHTENING TORQUE (in daNm)	
Flywheel bolts	6

REMOVAL

Fit immobilising tool **Mot. 582-01**.

Replace the flywheel if it has been damaged.

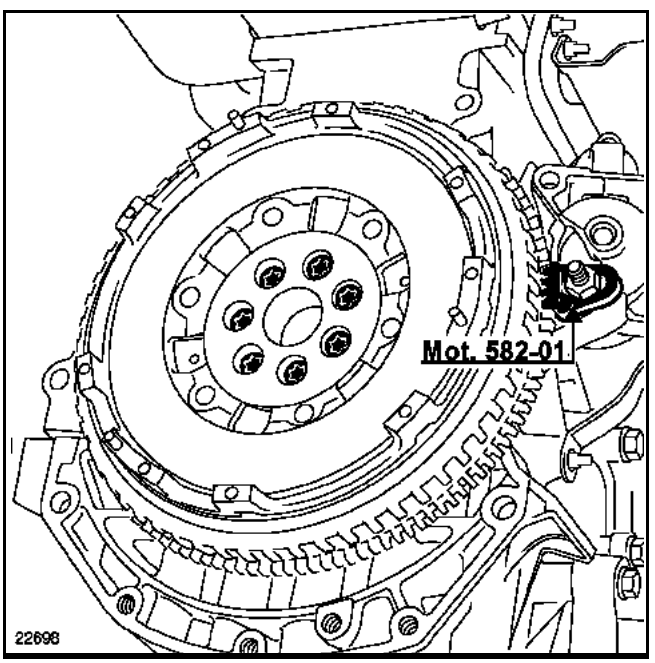

REFITTING

Clean the crankshaft mounting bolt threads.

Degrease the bearing face of the flywheel on the crankshaft.

Cement the flywheel bolts using **Loctite FRENETANCH and tighten them to the recommended torque**.

GETtheMANUALS.org

REPLACEMENT

This operation is carried out after the gearbox has been disconnected from the engine and the clutch and flywheel have been removed.

EQUIPMENT REQUIRED
Bearing extractor

REMOVAL

Use a general purpose puller to remove the bearing.

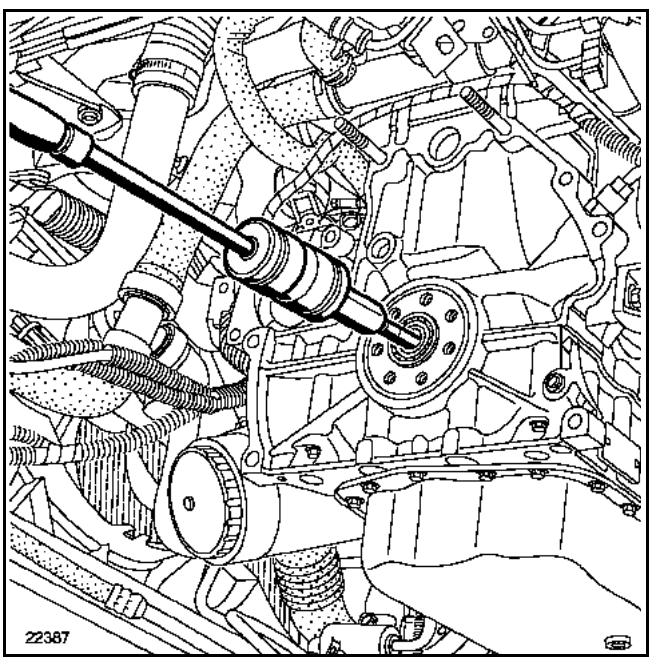

REFITTING

Fit the new bearing. The bearing is lubricated, so only clean the external diameter.

Coat the external bearing diameter with **loctite FRENBLOC**.

Fit the bearing with a tube applying pressure on the outer cage.

GETtheMANUALS.org

PK 6 GEARBOX

Suffix	Engine	Differential ratio	1st	2nd	3rd	4th	5th	6th	Reverse gear
PK6-013	Turbocharged F4R	16:67	11:43	19:40	29:43	39:43	39:35	41:31	27:47
PK6-004	G9T	17:64	11:43	19:40	31:43	41:40	41:31	47:30	27:47

GETtheMANUALS.org

CAPACITY (in litres)

PK6	2.4 ± 0.15

VISCOSITY GRADE

TRANSELF TRP 75 W80W

PK6

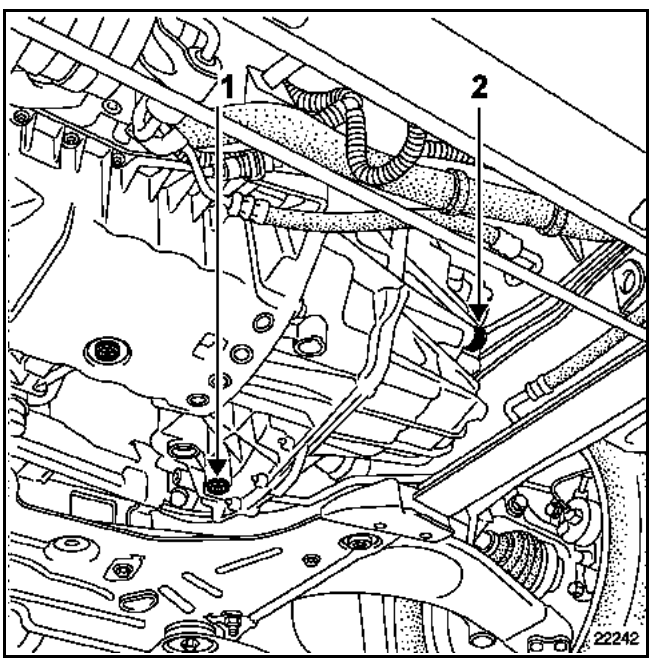

1 Drain plug
2 Filler plug

GEARBOX LEVEL GAUGE

The level is at mark A.

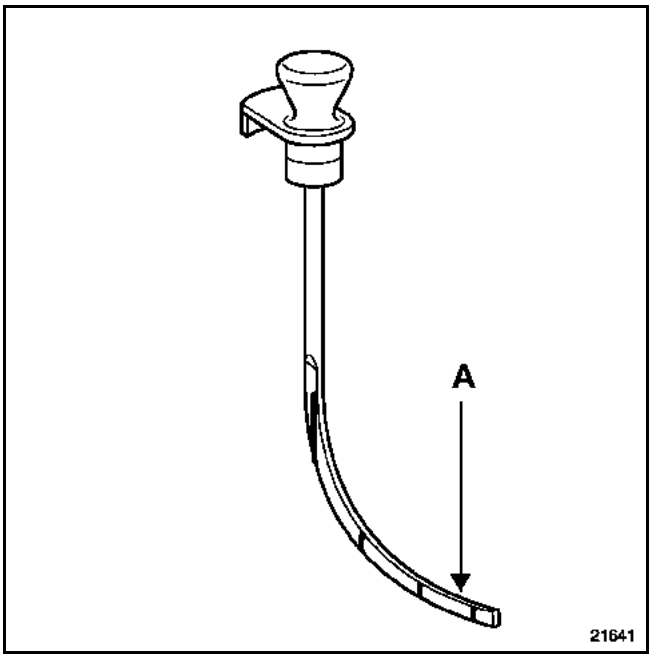

The level is checked using tool **B. Vi. 1631**.

NOTE:
Do not top up by overfilling. An excess of oil could impair the operation of the gearbox.

GETtheMANUALS.org

PK6

TYPE	PACKAGING	PART NUMBER	COMPONENT
MOLYKOTE BR2	**1 kg** tin	**77 01 421 145**	Right-hand sunwheel splines
RHODORSEAL 5661	**100 g** tube	**77 01 404 452**	Threaded plugs and switches

Part to be systematically replaced:

When it has been removed:
– the lip seal.

GETtheMANUALS.org

GEAR SELECTION GRIDS

PK6

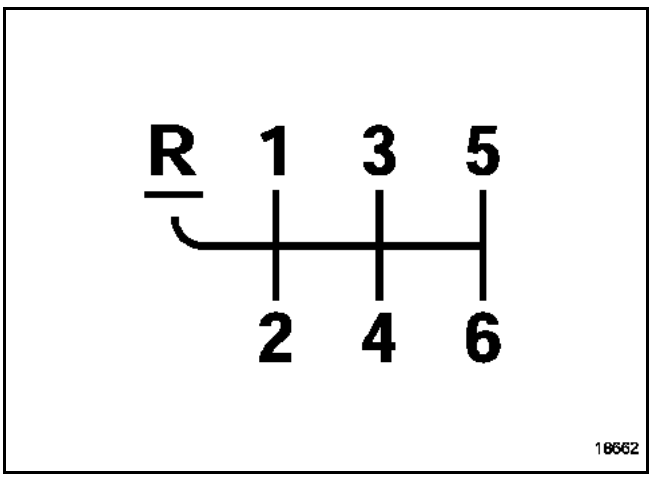

To select reverse gear, lift the collar (A) and move the lever.

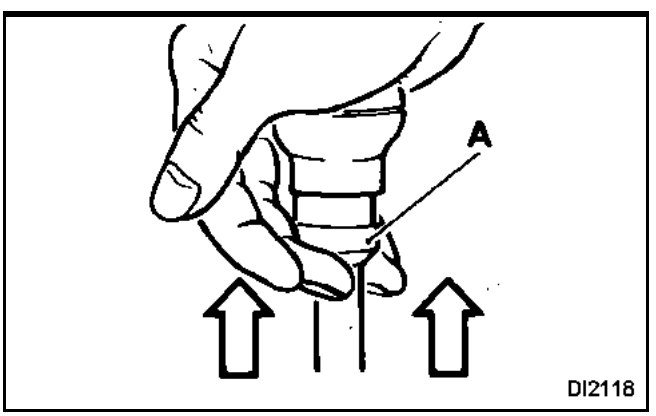

IMPORTANT:
It is FORBIDDEN to remove the breather valve (D) to fill the gearbox with oil.

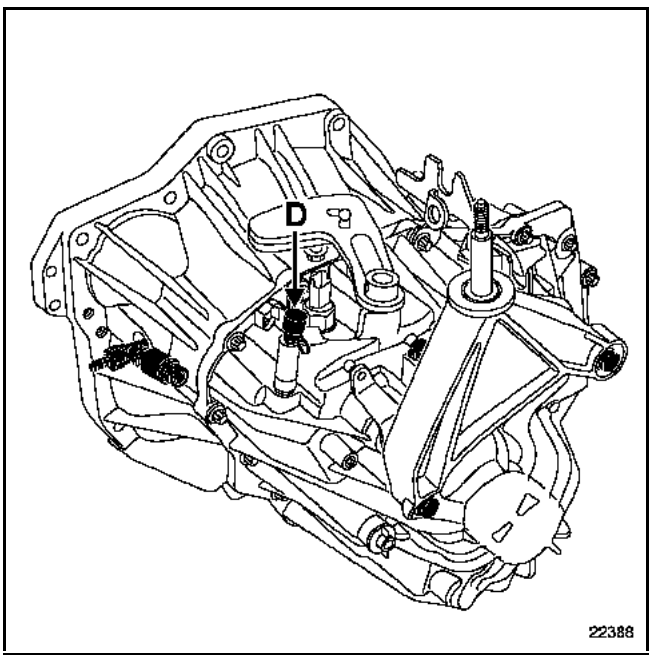

GETtheMANUALS.org

SPECIAL TOOLING REQUIRED	
Mot. 1453	Engine retaining device
Mot. 1531	Tool for centring flywheel
Mot. 453-01	Hose clamp pliers (hose)
EQUIPMENT REQUIRED	
Hydraulic jack	

TIGHTENING TORQUES (in daNm)	
Wheel bolt	11
Brake calliper column bolt	0.7
Steering ball joint nut	3.7
Lower ball joint nut	11
Shock absorber base bolt	18
Driveshaft gaiter bolt	3
Suspended mounting bolt on body	4.5
Suspended mounting bolt on gearbox	10.5
Sub-frame front mounting bolt	18
Sub-frame rear mounting bolt	18
Tie-rod mounting on side member	10.5
Tie-rod mounting on side cross member	21
Upper front mounting on the bracket	6.2
Lower front mounting on the bracket	10.5
Rear sub-frame tie-rod mounting bolt	10.5
Engine tie-bar sub-frame bolt	10.5
Engine tie bar engine bolt	10.5
Starter motor bolt	4.4
Bolts around the gearbox	4.4
Filler plug	0.1 7
Drain plug	2.4

GETtheMANUALS.org

REMINDER

Before disconnecting the battery, you must:

– switch off the ignition,
– switch off all consumers,
– wait until the fan stops (after + after ignition is cut off),
– if the vehicle is fitted with Carminat, wait until the system has completely shut down (approximately **1 minute**) before disconnecting the battery.

IMPORTANT:
There is a risk that Carminat will not work if this delay is not respected.

GETtheMANUALS.org

REMOVAL

Put the vehicle on a two-post lift.

Open the bonnet and remove:
– the engine covers,
– the fuse box cover (A),

Disconnect the battery.

Remove:
– the battery bolt (B),
– the connections (C) on the air unit,

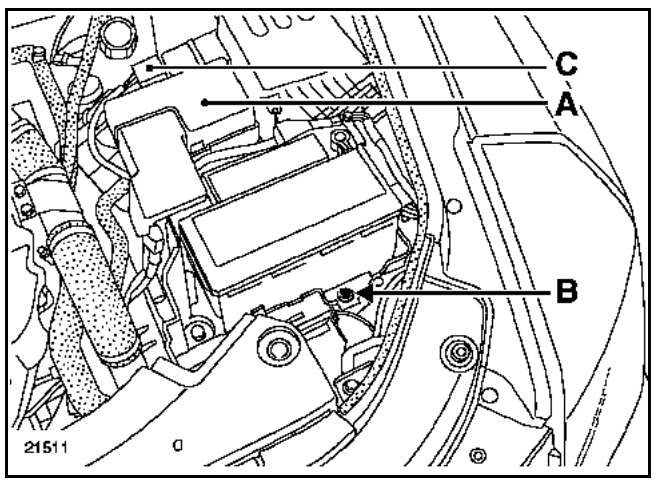

– the fuses and the fuse holder,
– the battery mounting fuse box,
– the electric wiring harness on the battery mounting at (D),
– the battery mounting bolt (E).

To do this, drill out the three tamperproof bolts using a **5 mm** diameter drill bit in the bolt shaft.
Then remove the bolts using tool **Mot. 1372**.

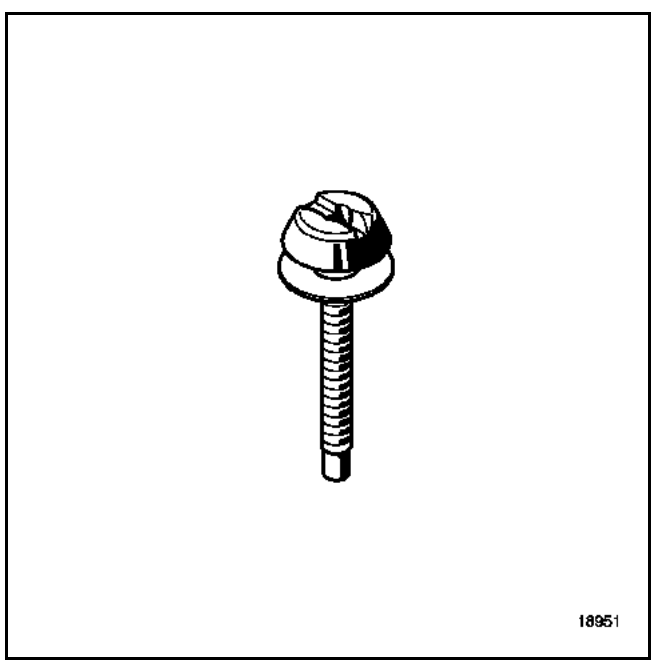

NOTE:
Replace all the bolts when refitting.

Release:
– air duct (1),
– the air duct (2) with the air filter unit,

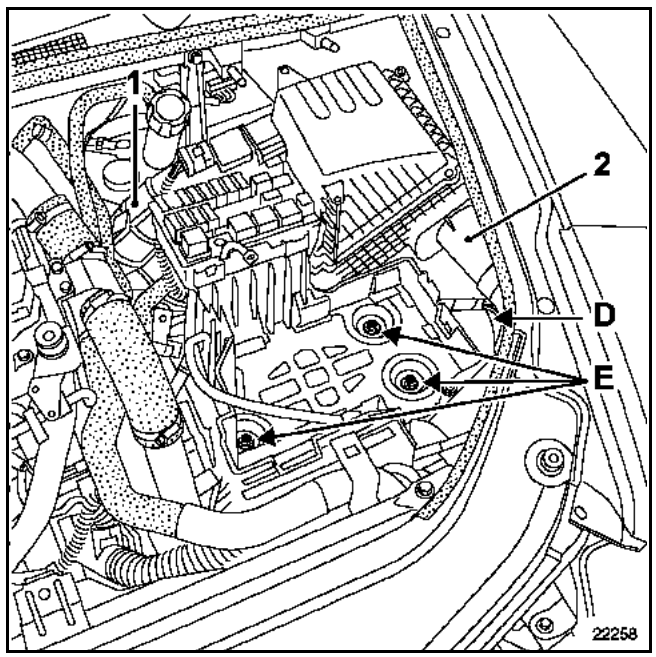

– the computer (nuts 3) to remove the computer connectors,
– the electric wiring harness on the computer tray to remove it.

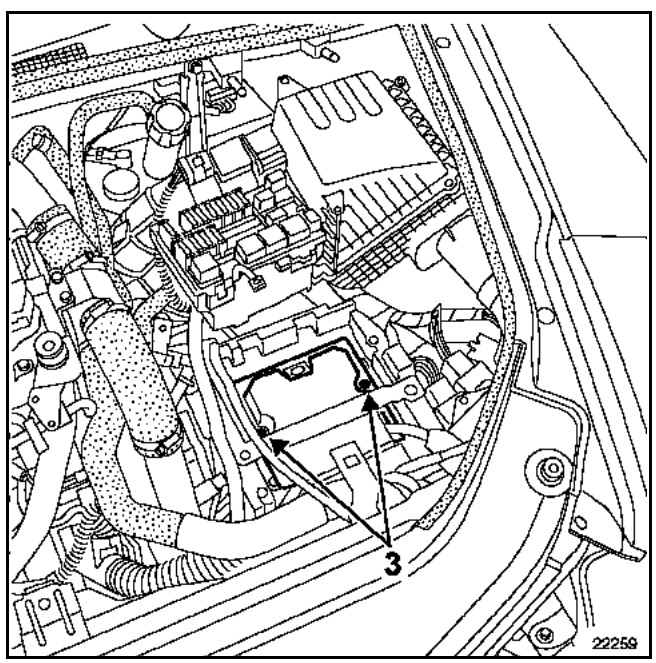

Drain the brake fluid reservoir down to the connector of the clutch master cylinder pipe using a syringe.

GETtheMANUALS.org

Unclip the clutch pipe at (1) and (2).

Remove:
– the reverse gear connector (A),
– the gear control cables (B) and remove them from their mounting on the gearbox.

Remove the different wiring harnesses that may be damaged when the engine is taken down.

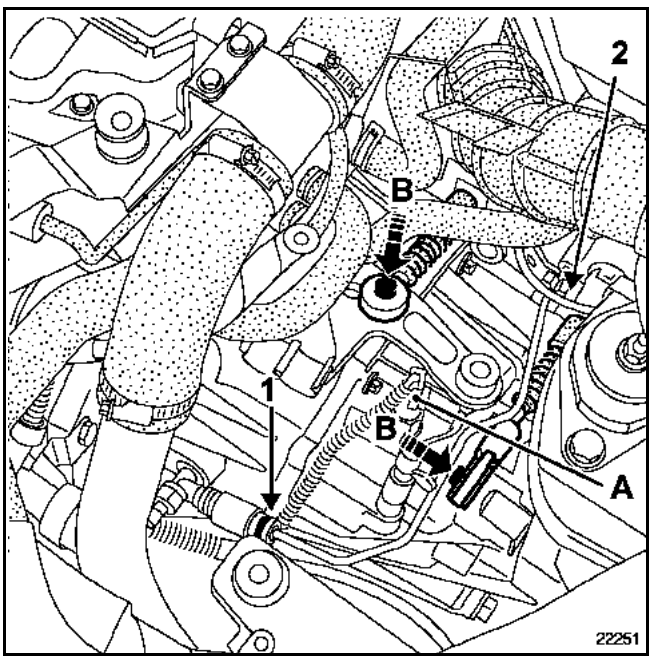

Remove:
– the wheels;
– the engine undertray.

Drain the gearbox.

Unclip the brake pipes.

Remove:
– the left and right-hand mudguards,
– the protectors on the tie-rods,
– the brake callipers, securing them to the suspension spring to protect the hose,
– the wheel sensors (if the vehicle is fitted with Anti-lock Braking System) and release the ABS wiring harness from the sub-frame arms,
– the nut from the position sensor linkage (for vehicles fitted with Xenon lamps),
– the height sensor retaining plate (3).

Left-hand side of the vehicle

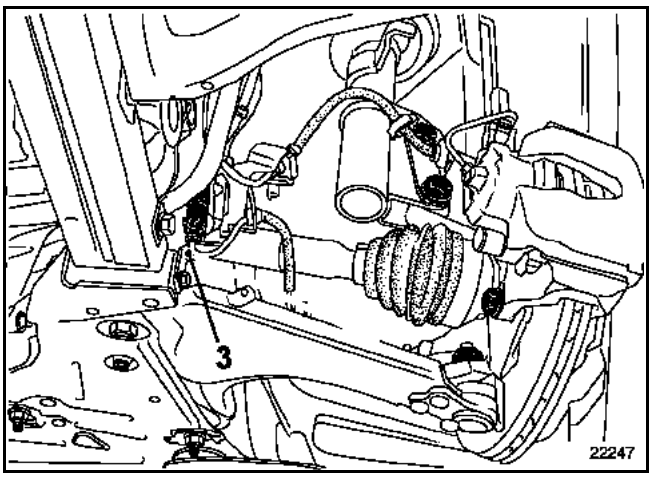

Remove:
– the driveshaft mountings on the gearbox,
– the steering ball joint (C),
– the upper nut (D) from the anti-roll bar tie-rod.

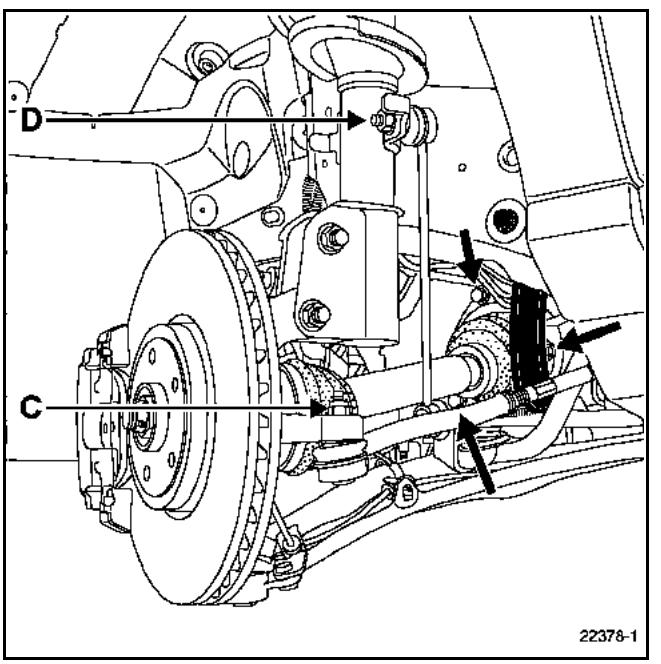

GETtheMANUALS.org

Remove:
– the lower ball joint (F) using a cut-down Allen key if the nut cannot be slackened.

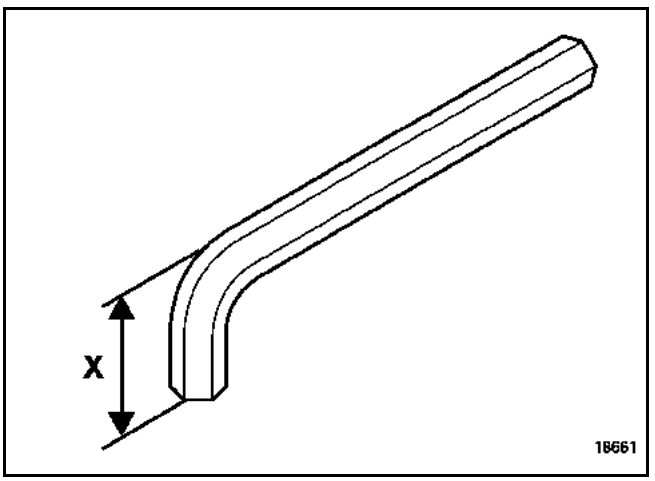

X = 25 mm

– the shock absorber base mountings (E),

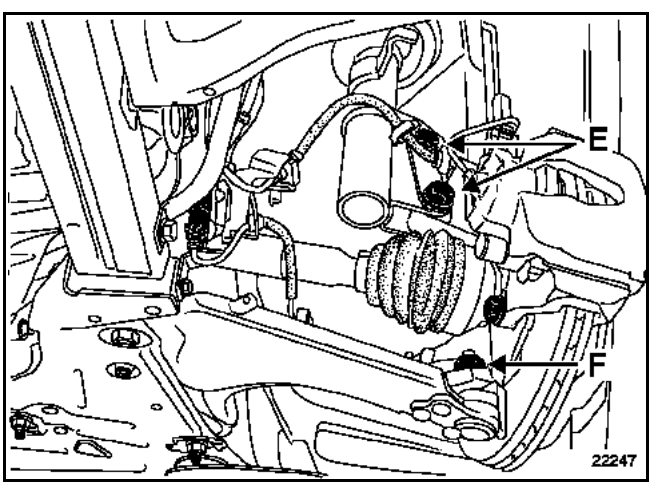

Remove the driveshaft, taking care to protect the gaiters.

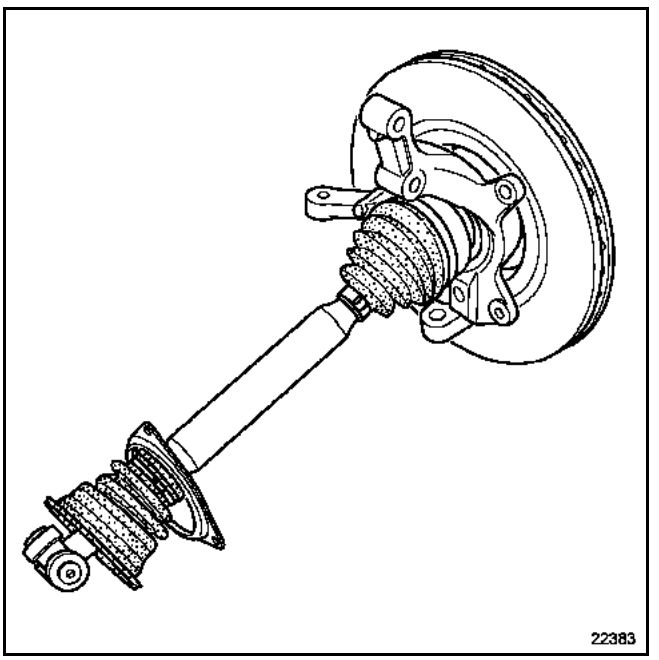

Right-hand side of the vehicle

Remove:
– the intermediate bearing mountings on the engine arm,
– the steering ball joint (A),
– the upper nut (B) from the anti-roll bar tie-rod.

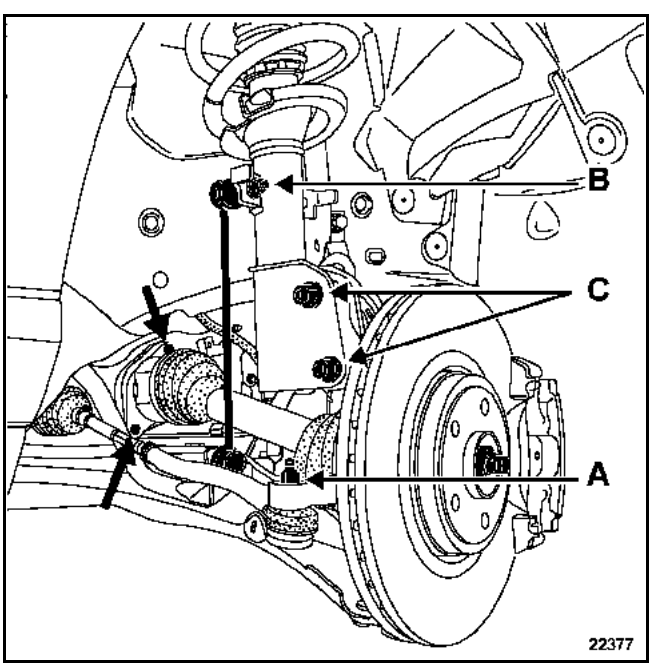

GETtheMANUALS.org

Undo:
– the lower ball joint, using a cut-down Allen key if the nut cannot be slackened.
– the shock absorber base mountings (C),

Remove the driveshaft, taking care to protect the gaiters.

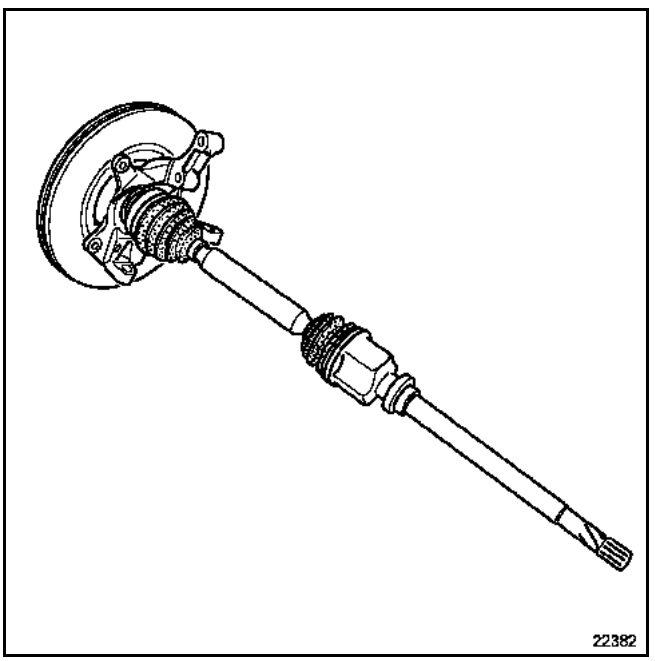

Remove the transverse bar (D) fitted on the side members.

On each side of the vehicle, remove:
– the tie-rod bolts (1) on the side member,
– the side member bolts (2) and remove the sidemembers.

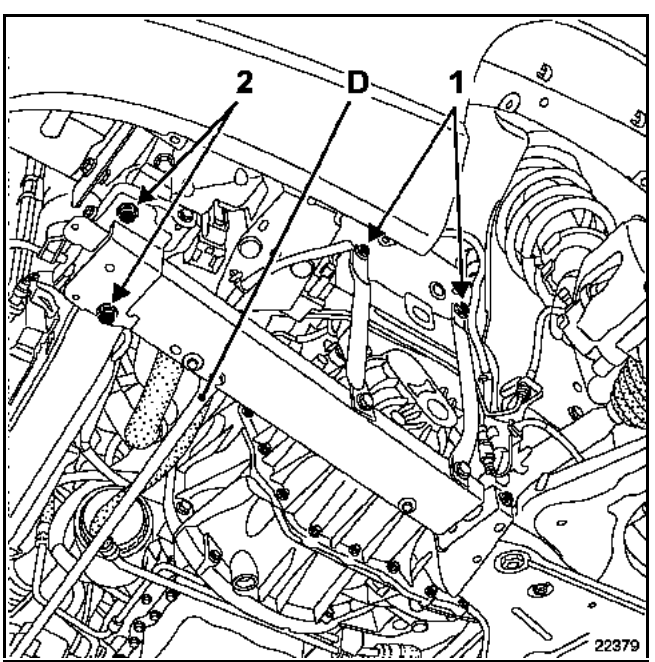

Slacken the sub-frame tie-rod mounting bolts on the body.

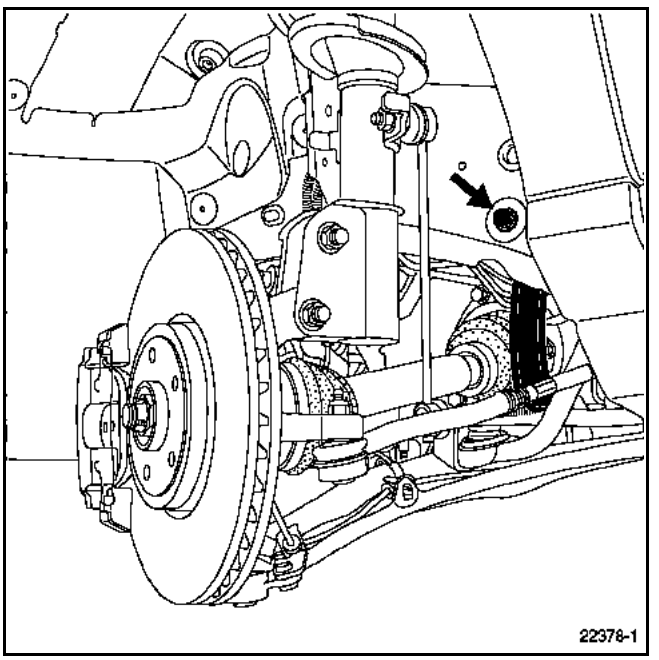

Remove:
– the acoustic tie-rod bolts,
– the sub-frame rear mounting bolts.

Unclip:
– the rear brake pipes on the sub-frame,
– the torque reaction arm,
– the steering heat shield.

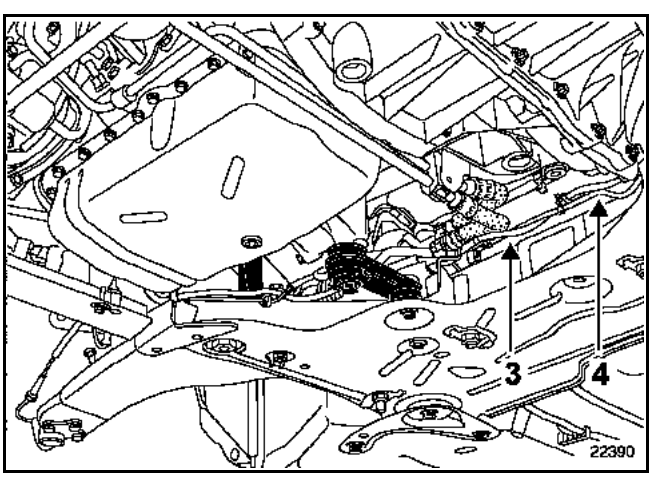

On the sub-frame, release the ABS wiring harness and the brake fluid supply hose at (3) and (4).

GETtheMANUALS.org

Remove the expansion chamber (see exhaust pipe: **catalytic converter Section 19B**).

Tilt the sub-frame slightly to remove the steering rack mountings.

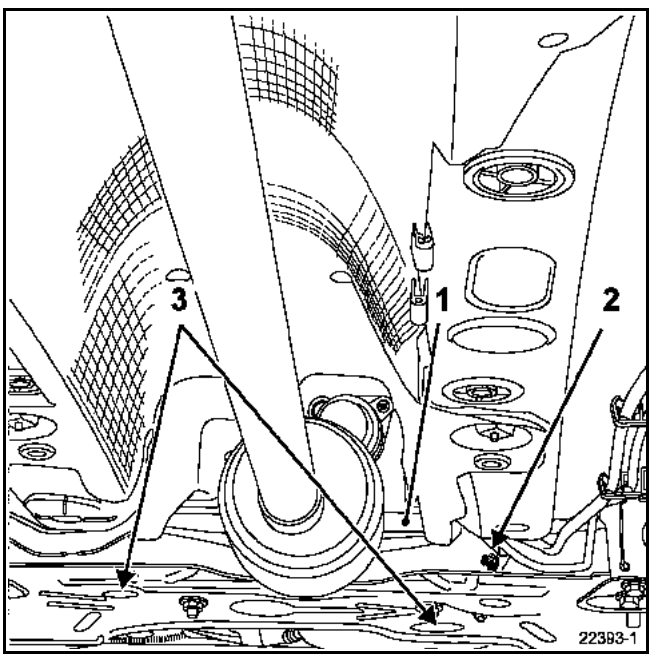

Remove:
- the exhaust heat shield plate (1),
- the diesel hose mounting bolt (2) on the sub-frame,
- the two exhaust heat shield retaining bolts (3).

Place a component jack under the sub-frame.

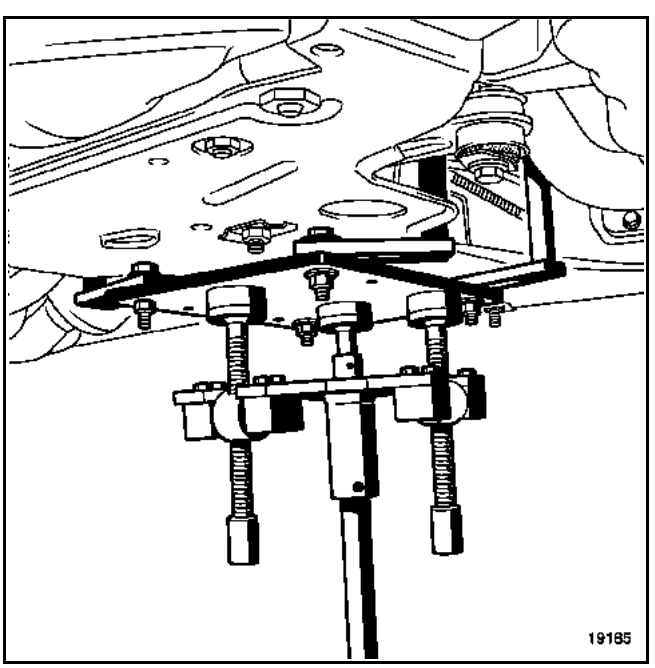

Fit the steering rack.

Remove:
- the two sub-frame tie-rods (first release the hoses on the left-hand side) or the bolt from the tie-rod fitted on the sub-frame,
- the engine sub-frame,
- the TDC sensor connections (4),
- the power assisted steering pipe mountings at (5) and open the mounting bracket (6),
- the gear box cover plate (7).

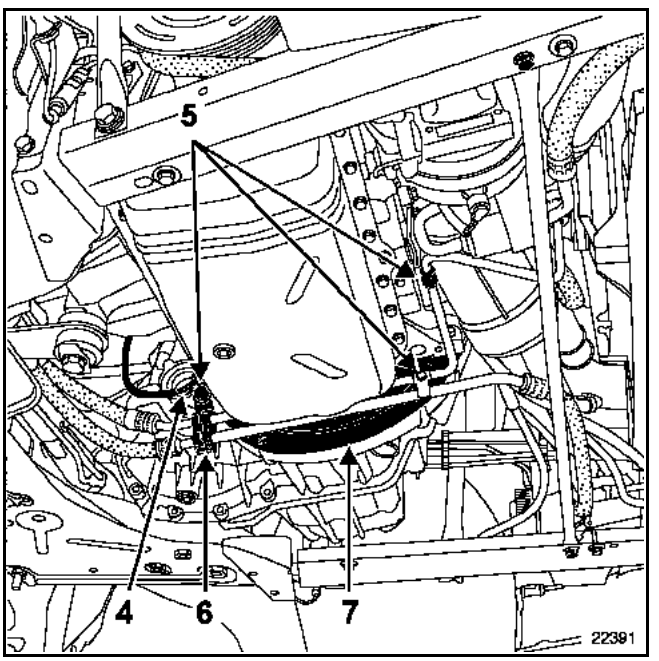

Special notes for right-hand drive vehicles

In addition, remove the mounting bracket (C).

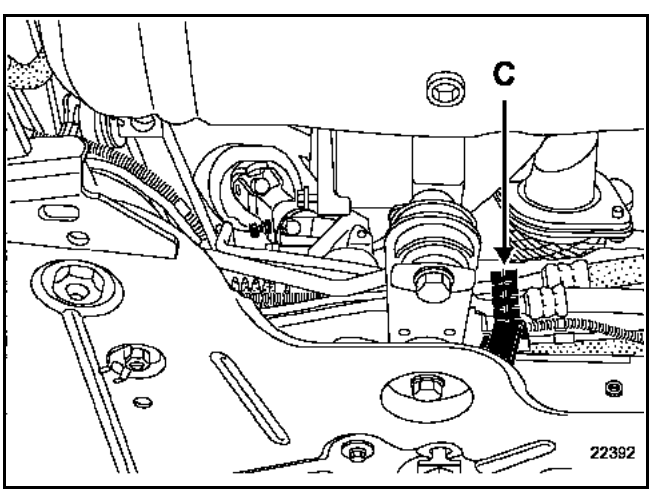

GETtheMANUALS.org

Remove:
– the bolts from the starter and release it while attaching it (it is not necessary to dismantle the starter wiring harness),

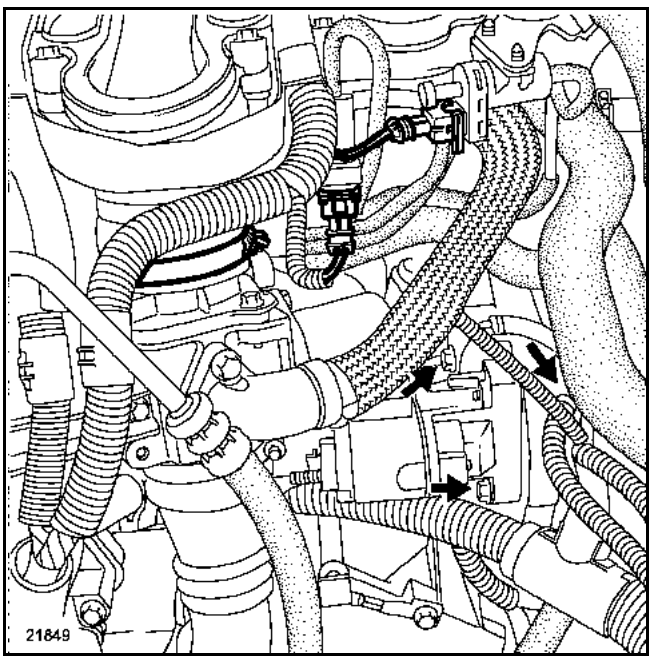

– the torque reaction arm (A) connected to the suspended engine mounting,
– the two side covers located at (B) to install the engine mounting.

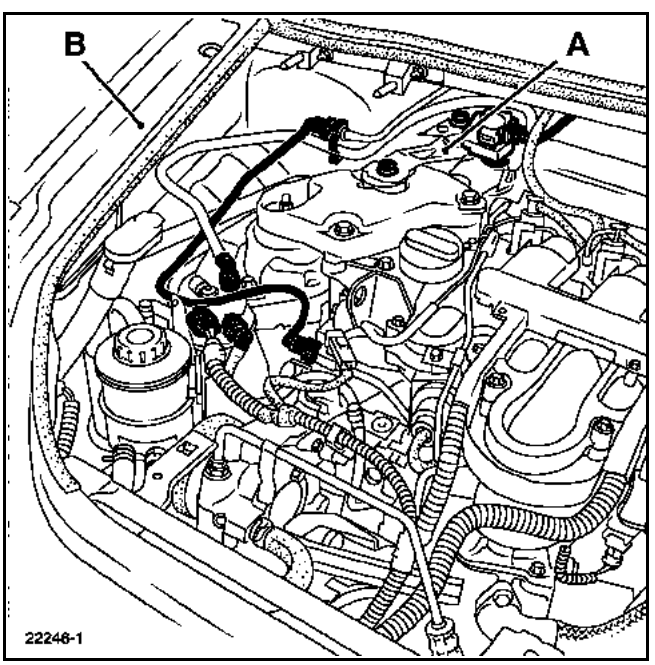

Position the engine support tool **Mot. 1453** with the retaining straps.

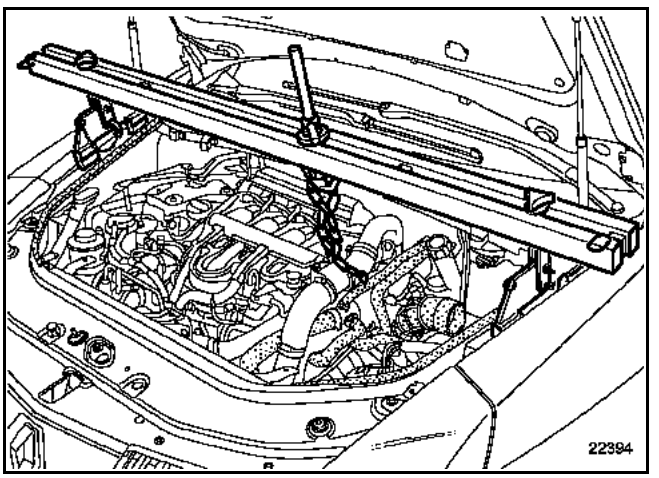

Remove:
– the nut (C),
– the two bolts for the rubber mounting (D),
– the rubber mounting,

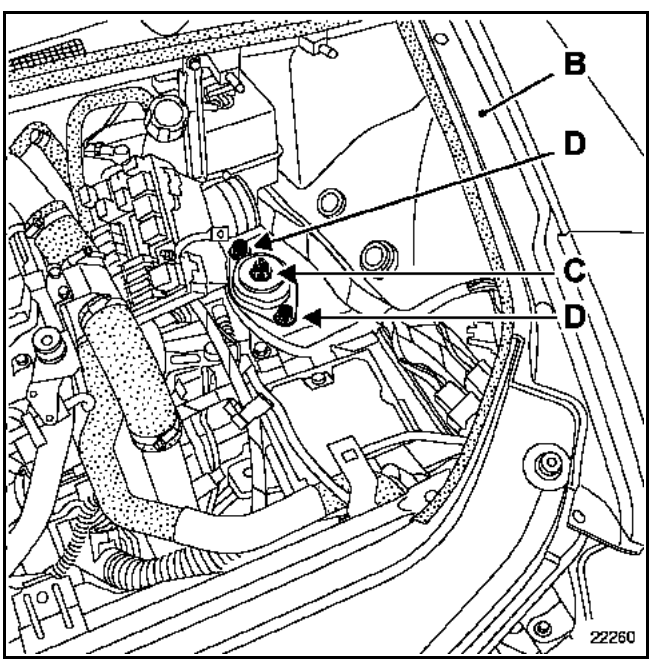

– the upper mountings of the gearbox.

GETtheMANUALS.org

Remove the gearbox mounting.

Position the hydraulic jack.

Remove the lower mountings of the gearbox.

For reasons of safety, removal of the gearbox is a two-person job.

REFITTING

If the clutch has been removed, refer to **Section 20**.

Ensure that the engine/gearbox centring stud is fitted.

IMPORTANT:
Do not grease the clutch shaft splines.

Refit the gearbox support tightening the mounting bolts in the correct order.

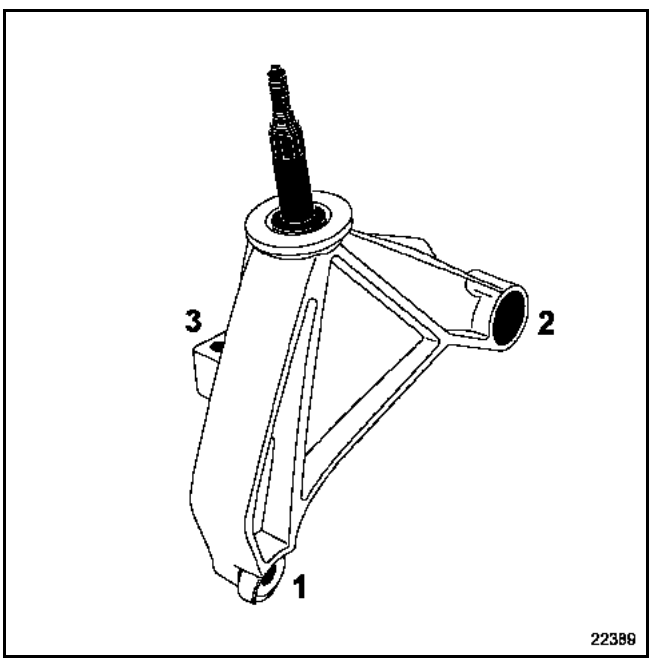

Refitting is the reverse of removal.

Refill:
– the gearbox (see the Technical Note on **Lubricants**),
– the brake fluid reservoir.

Bleed the clutch system (see **Section 37A: Clutch master cylinder**).

IMPORTANT:
Ensure the brake pipes are correctly secured to the shock absorber bases.

IMPORTANT:

- Battery: reinitialize the electrical components (see **Section 80A: Special notes on the battery**).
- Adjusting the front axle geometry (see **Section 07B: Adjusting the axle assemblies**).
- If the vehicle is fitted with Xenon lamps, reinitialize the computer and the body height sensor (see **Section 80C: Headlights with Xenon bulbs**).
- If the vehicle is fitted with range finding equipment, reinitialize the range finder (see **Section 83D: Adaptive cruise control**).

GETtheMANUALS.org

REMOVAL

Put the vehicle on a two-post lift.

Open the bonnet and remove:
– the engine covers,
– the fuse box cover (A).

Disconnect the battery.

Remove:
– the battery bolt (B),

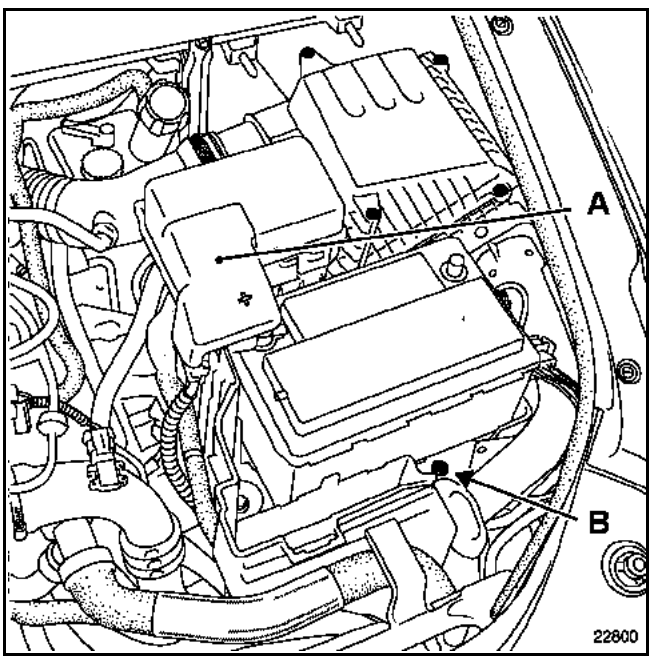

– the fuses and the fuse holder,
– the battery mounting fuse box,
– the air duct,
– the electric wiring harness on the battery mounting at (C).

To do this, drill out the three tamperproof bolts using a **5 mm** diameter drill bit in the bolt shaft.
Then remove the bolts using tool **Mot. 1372**.

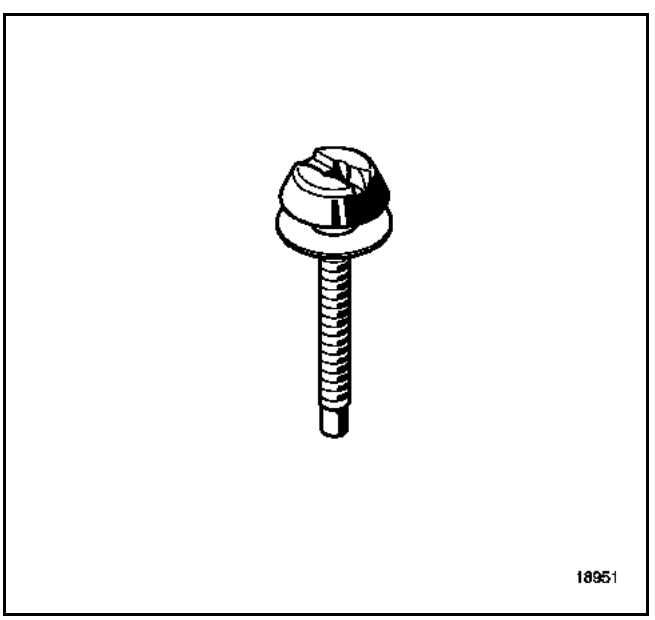

NOTE:
Replace all the bolts when refitting.

– the battery mounting bolt (D),
– the air filter unit.

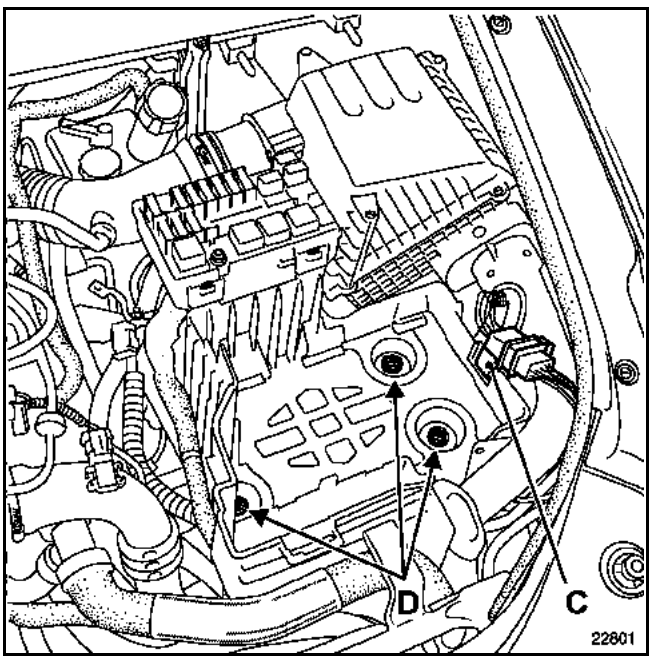

Release:
– the electric wiring harness (1) on the computer tray to remove it.
– the computer (nuts 2) to remove the computer connectors.

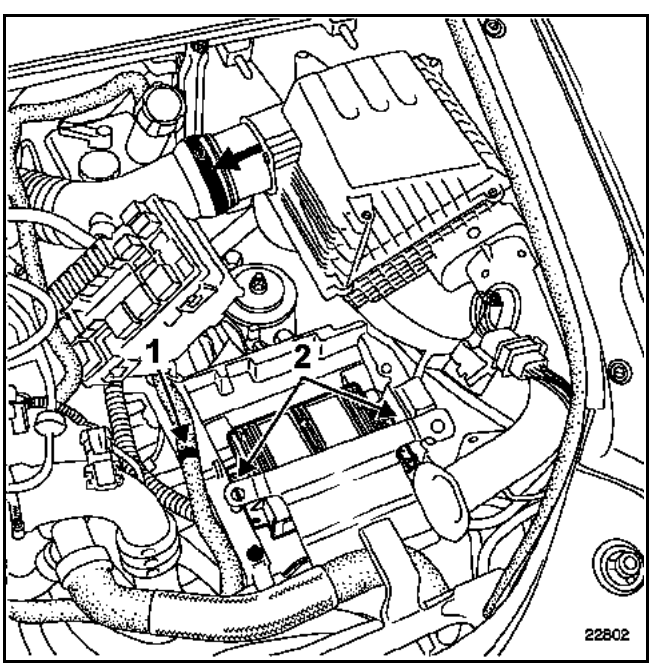

Drain the brake fluid reservoir down to the connector of the clutch master cylinder pipe using a syringe.

GETtheMANUALS.org

Remove the clutch hose after you have removed the clip (1) on the clutch slave cylinder and unclip the hose at (2).

Remove:
– the reverse gear connector (A),
– the gear control cables (B) and remove them from their mounting onthe gearbox.

Remove the various wiring harnesses that may be damaged when the engine is taken down.

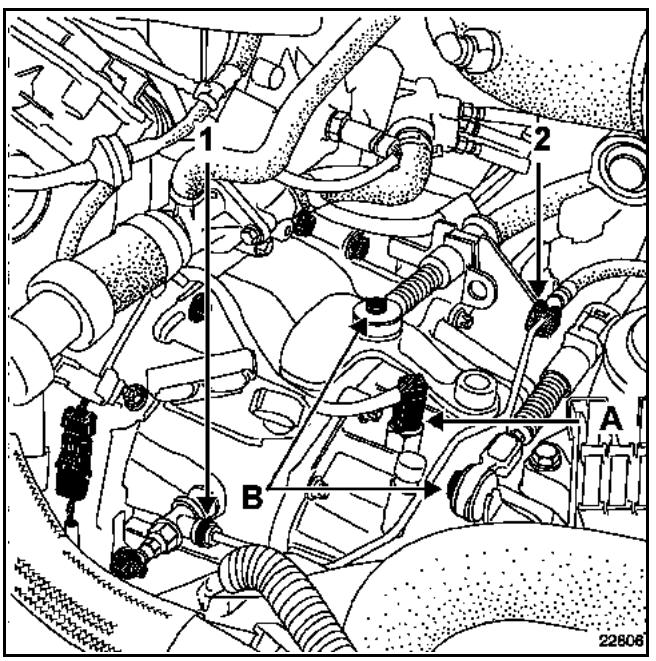

Remove:
– the wheels;
– the engine undertray.

Drain the gearbox.

Unclip the brake pipes.

Remove:
– the left and right-hand wheel arch liners and the two protectors on the tie-rods,
– the brake callipers, securing them to the suspension spring to protect the hose,
– the wheel sensors (if the vehicle is fitted with Anti-lock Braking System) and release the ABS wiring harness from the sub-frame arms,
– the nut (3) from the position sensor linkage if the vehicle is fitted with Xenon lamps,
– the height sensor retaining plate (4).

Left-hand side of the vehicle

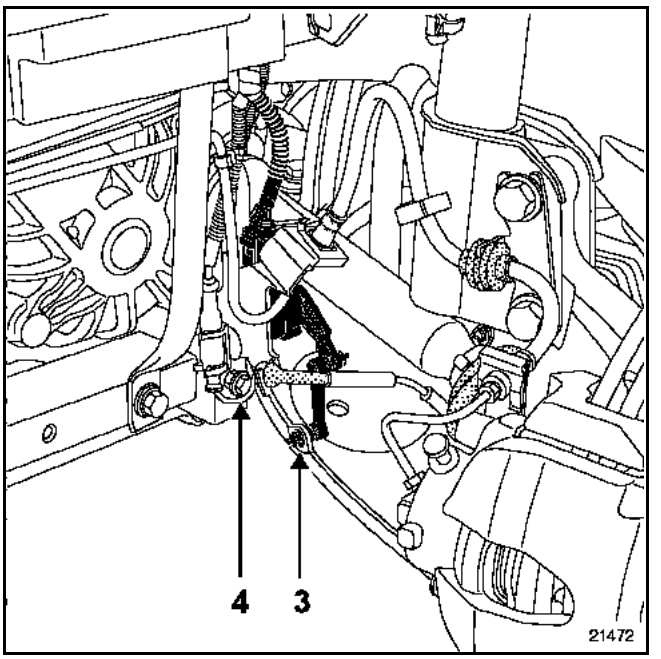

Remove:
– the driveshaft mountings on the gearbox,
– the steering ball joint (C),
– the upper nut (D) from the anti-roll bar tie-rod.

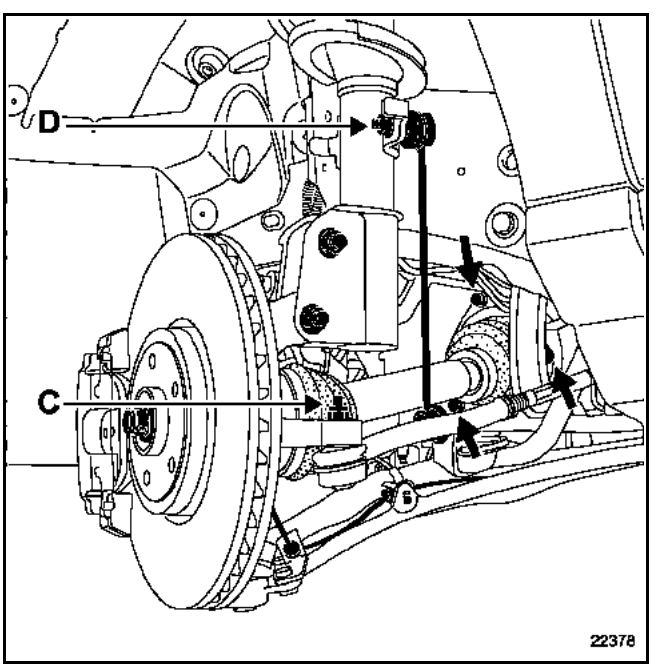

GETtheMANUALS.org

Remove:
– the lower ball joint (F) using a cut-down Allen key if the nut cannot be slackened and release it.

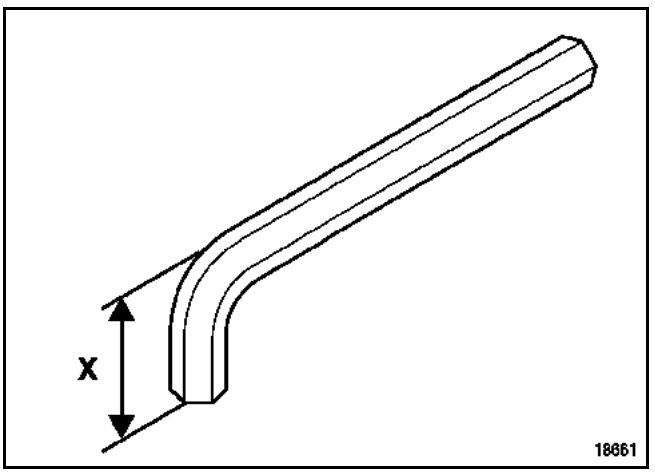

X = 25 mm

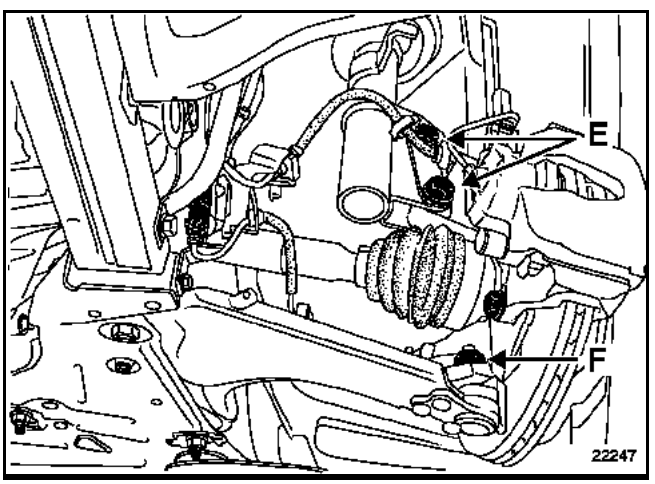

– the shock absorber base mountings (E),

Remove the driveshaft, taking care to protect the gaiters.

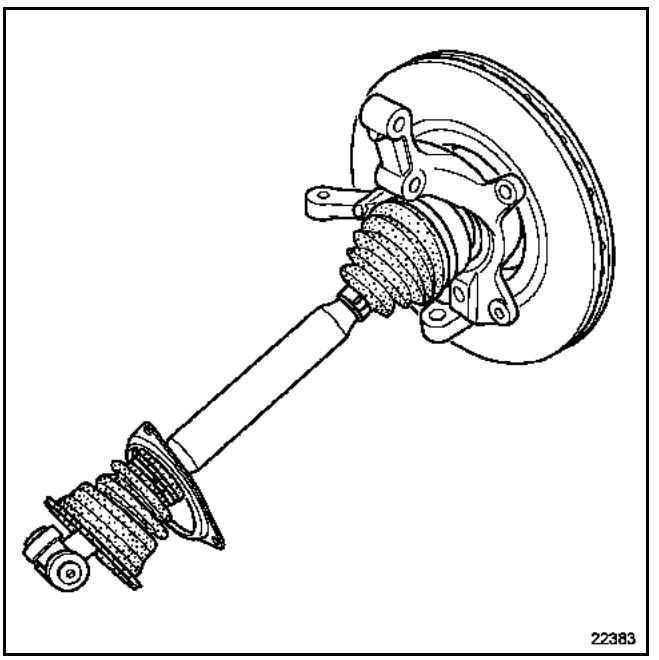

Right-hand side of the vehicle

Remove:
– the intermediate bearing mountings (1) on the engine arm,
– the steering ball joint (A),
– the upper nut (B) from the anti-roll bar tie-rod.

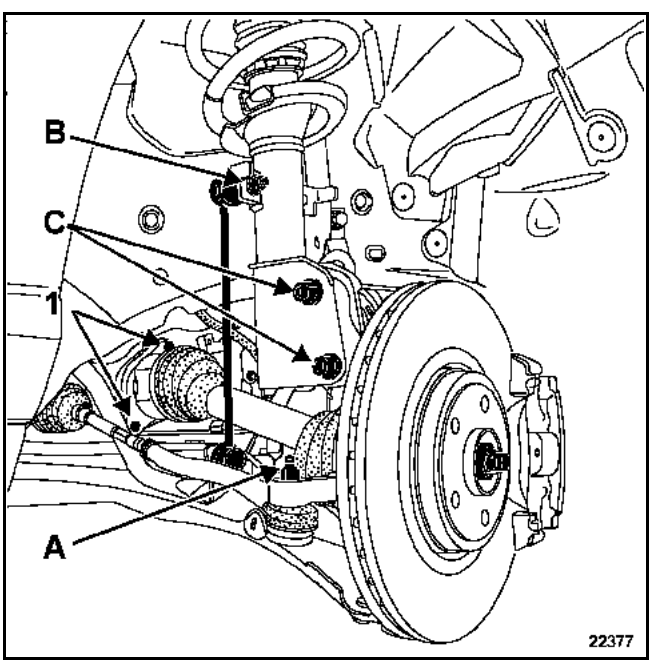

GETtheMANUALS.org

Undo:
– the lower ball joint, using a cut-down Allen key if the nut cannot be slackened.
– the shock absorber base mountings (C),

Remove:
– the driveshaft, taking care to protect the gaiters,

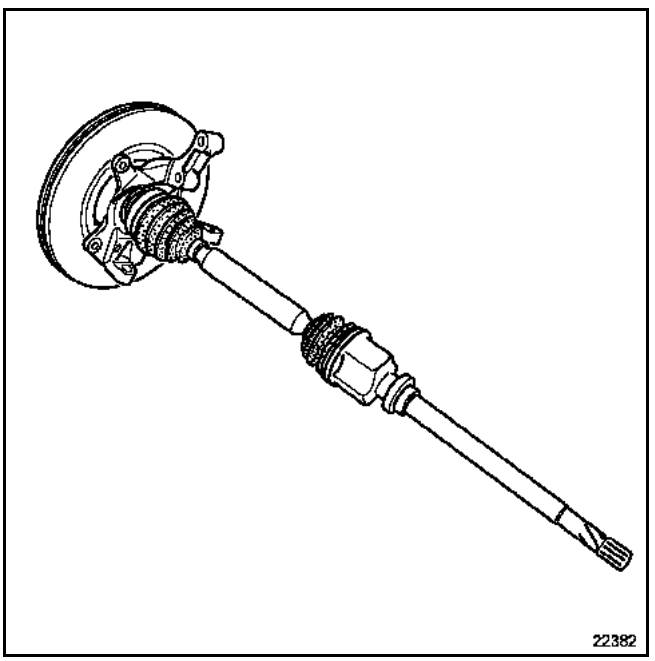

– the transverse bar (D) fitted on the side members.

Release the power assisted steering hose on the side member.

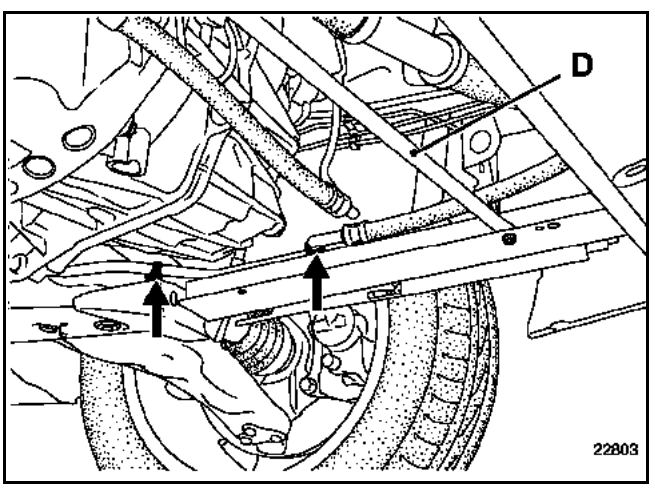

On each side of the vehicle, remove:
– the tie-rod bolts (1) on the side member,
– the side member bolts (2) and remove the side members.

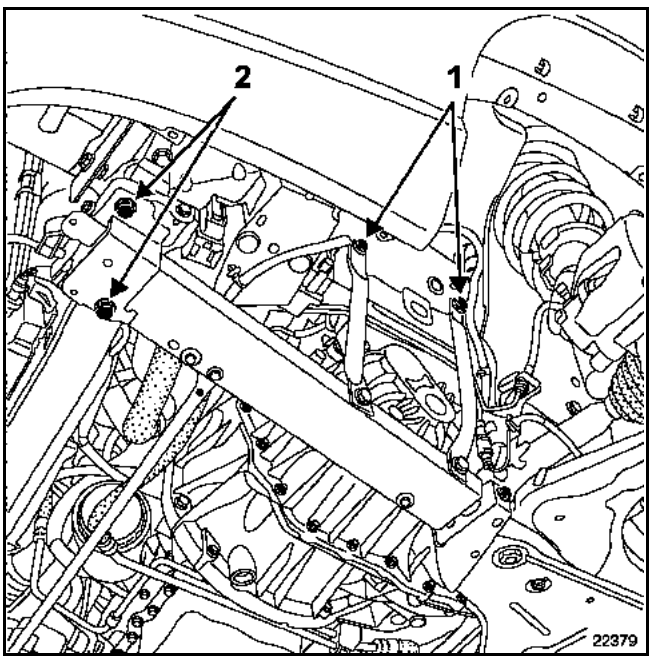

Slacken the sub-frame tie-rod mounting bolts on the body.

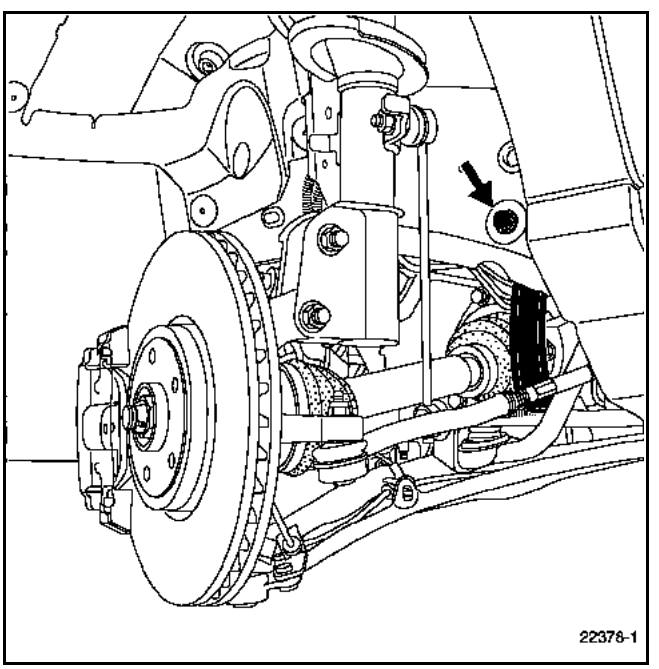

GETtheMANUALS.org

Remove:
– the two bolts from the exhaust heat shield at (3),
– the acoustic tie-rod bolts,
– the sub-frame rear mounting bolts.

Release:
– the rear brake hoses on the sub-frame,
– the torque reaction arm,
– the heat shield on the steering rack,

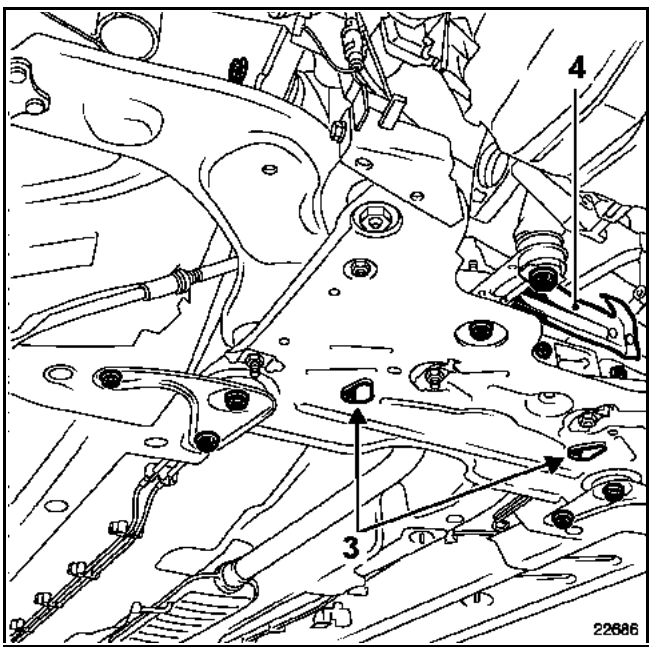

– the heat shield (4) to release the ABS wiring harness and the brake fluid supply hose fitted on the sub-frame.

Tilt the sub-frame and remove the bolts from the steering rack.

Place a component jack under the sub-frame.

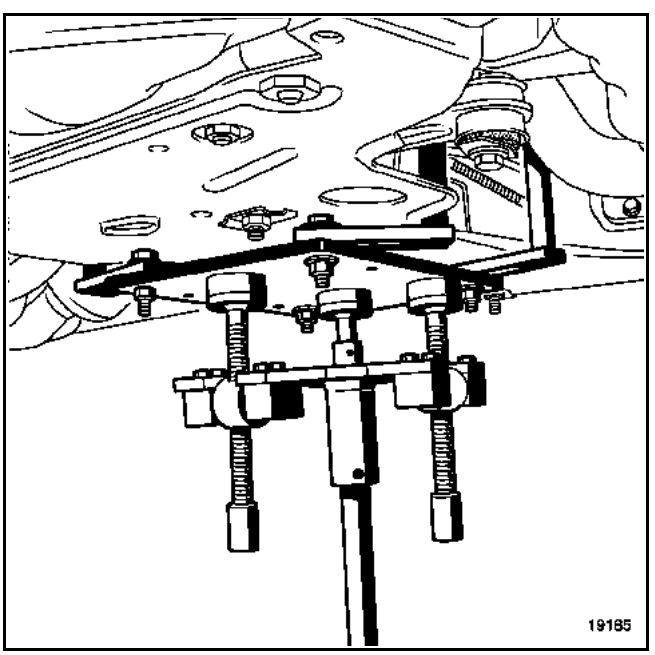

Fit the steering rack.

Remove:
– the two sub-frame tie-rods (on the left-hand side: release the hoses on the tie-rod) or remove the bolt from the tie-rod fitted on the sub-frame,
– the engine sub-frame,
– the catalytic converter mounting stay.

Release the coolant pump (nut 1) with its wiring harness at (2), (without removing the coolant pipes). Fasten it.

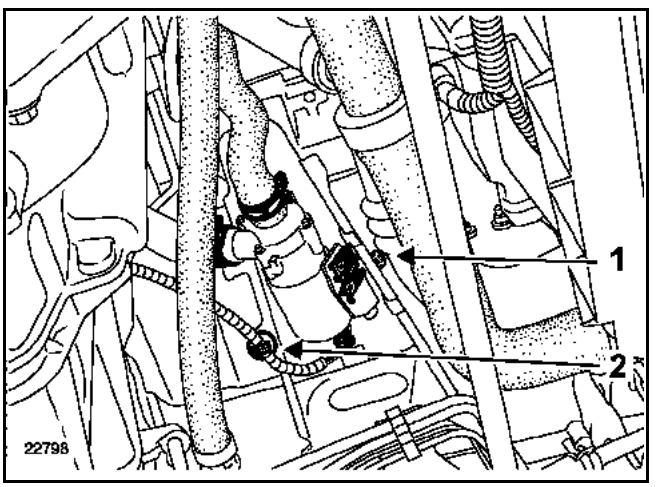

Release the coolant pipe.

Remove the electric wiring harness on the thermoplunger plugs.

Remove the nut (A) to release the electric wiring harness.

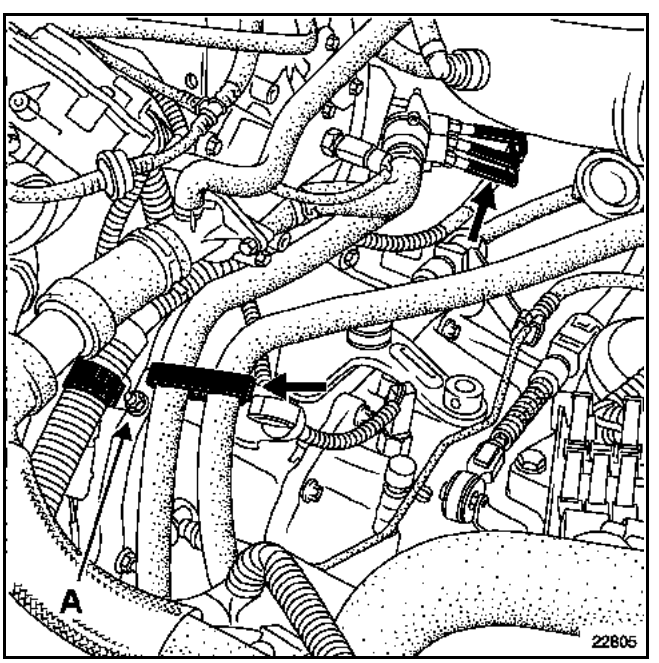

GETtheMANUALS.org

Remove:
– the connections (1) to the starter,
– the starter bolts (2),
– the oxygen sensor connections (3),

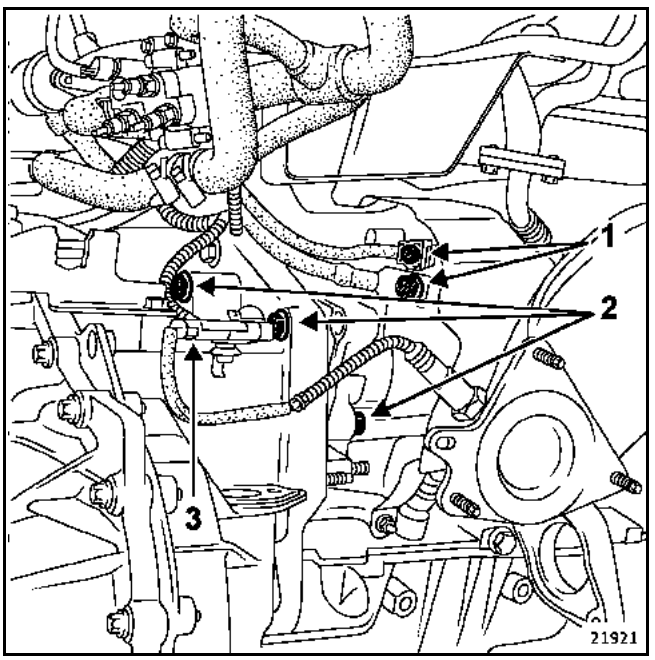

– the torque reaction arm (B) fitted on the suspended engine mounting.

Release:
– the mounting bracket hoses (C),
– the petrol vapour absorber solenoid valve (D).

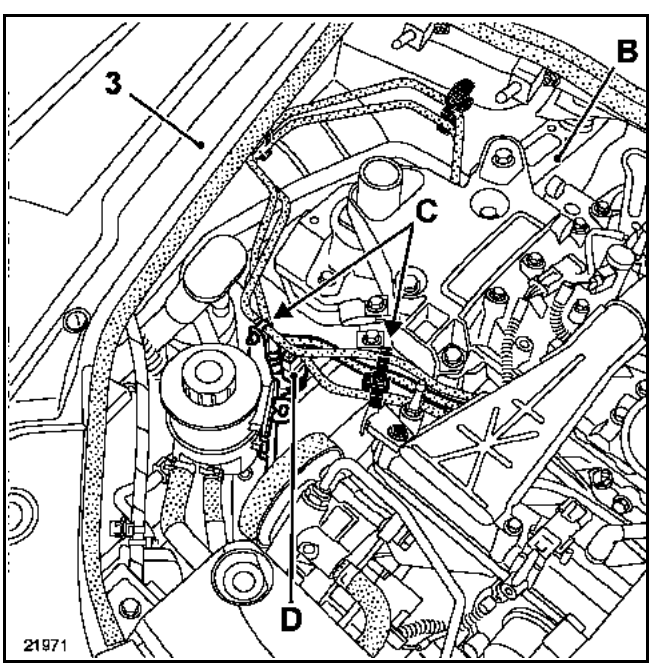

Remove the two side covers (3).

Position the engine support tool **Mot. 1453** with the retaining straps.

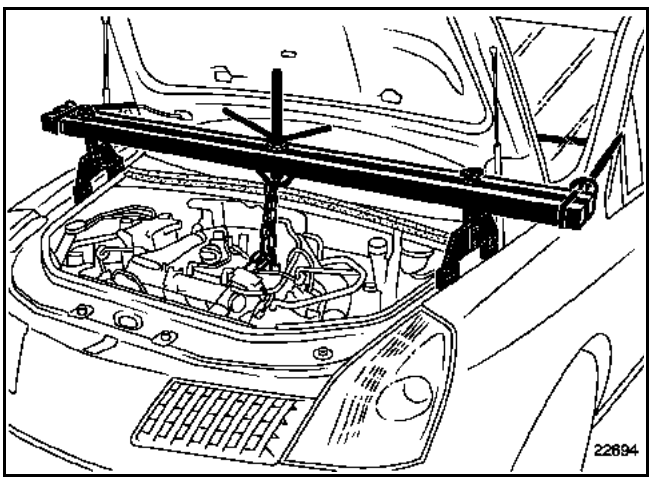

Remove the connections (4).

Remove the upper mounting from the gearbox.

Remove the electric wiring harness assembly.

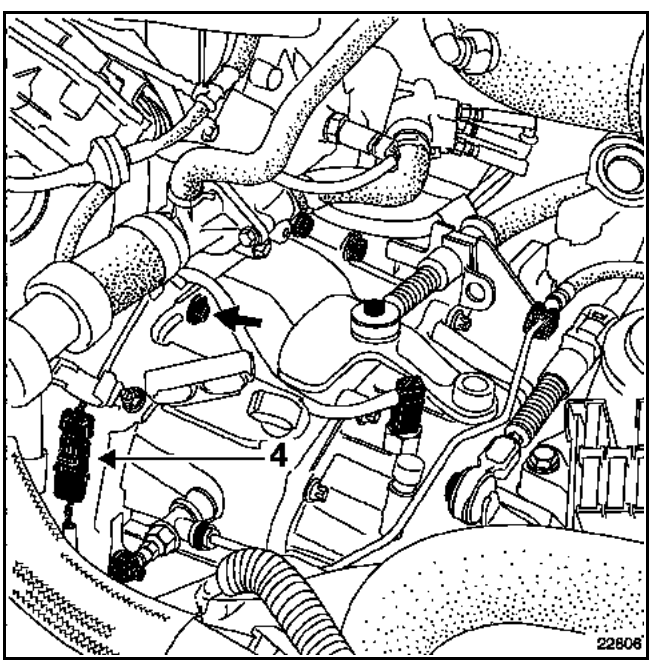

GETtheMANUALS.org

Remove:
– the power assisted steering pipe retaining bolt (A),
– the gearbox mounting nut (B),
– the two bolts for the rubber mounting (C),
– the rubber mounting.

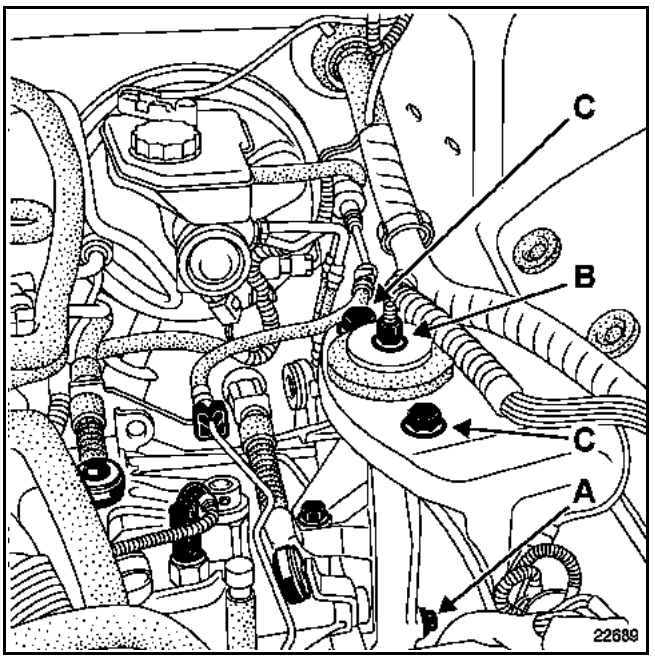

Tilt the engine and gearbox assembly.

Remove:
– the gearbox mounting,

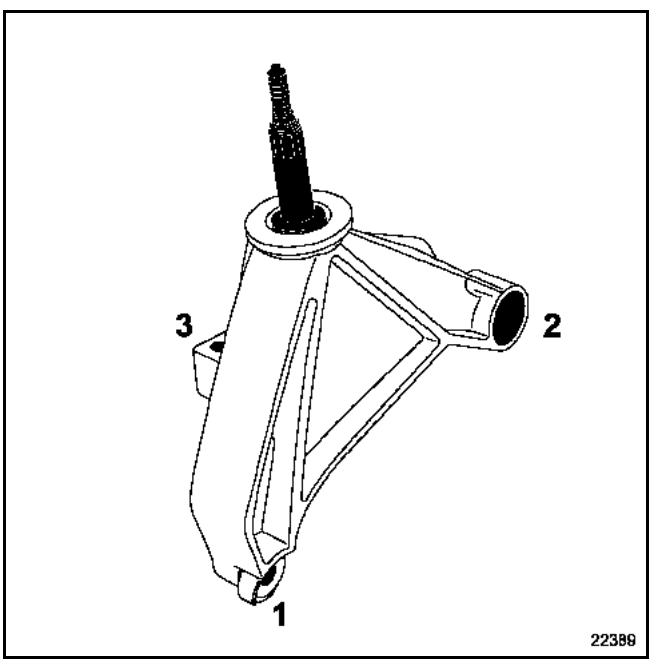

– the last bolt (2) from the starter (push back the starter and fasten it).

Position the hydraulic jack.

Remove:
– the lower mountings of the gearbox.
– the gearbox (remove the power assisted steering pipes taking care not to damage them).

REFITTING

If the clutch has been removed, refer to **Section 20**.

Ensure that the engine/gearbox centring stud is fitted.

IMPORTANT:
Do not coat the clutch shaft splines.

Refit the gearbox support tightening the mounting bolts in the correct order.

Refitting is the reverse of removal.

Refill:
– the gearbox (see the Technical Note on **Lubricants**),
– the brake fluid reservoir.

Bleed the clutch system (see **Section 37A: Clutch master cylinder**).

IMPORTANT:
Ensure the brake pipes are correctly secured to the shock absorber bases.

GETtheMANUALS.org

IMPORTANT:

- Battery: reinitialize the electrical components (see **Section 80A: Special notes on the battery**).
- Adjusting the front axle geometry (see **Section 07B: Adjusting the axle assemblies**).
- If the vehicle is fitted with Xenon lamps, reinitialize the computer and the body height sensor (see **Section 80C: Headlights with Xenon bulbs**).
- If the vehicle is fitted with range finding equipment, reinitialize the range finder (see **Section 83D: Adaptive cruise control**).

GETtheMANUALS.org

REPLACEMENT

This operation is carried out after the gearbox has been disconnected from the engine.

SPECIAL TOOLING REQUIRED	
B. Vi. 1236	**Primary shaft oil seal fitting tool**

REMOVAL

Using a ∅ **2.5 mm** drill bit, drill a hole in the gasket.

WARNING: DO NOT SCRATCH THE SHAFT OR THE SEAL BEARING SURFACE.

Insert a screw into the seal and extract the seal using a pair of pliers.

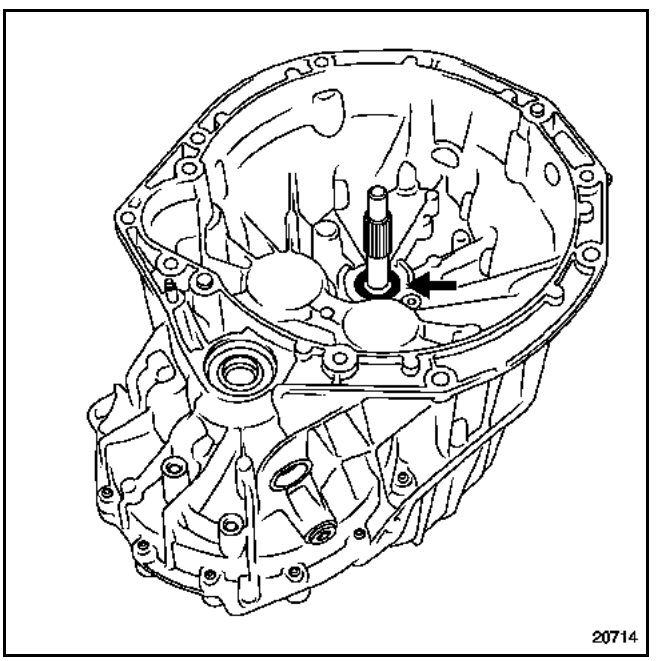

REFITTING

Fit a new seal along with its protector using tool **B. Vi. 1236**.

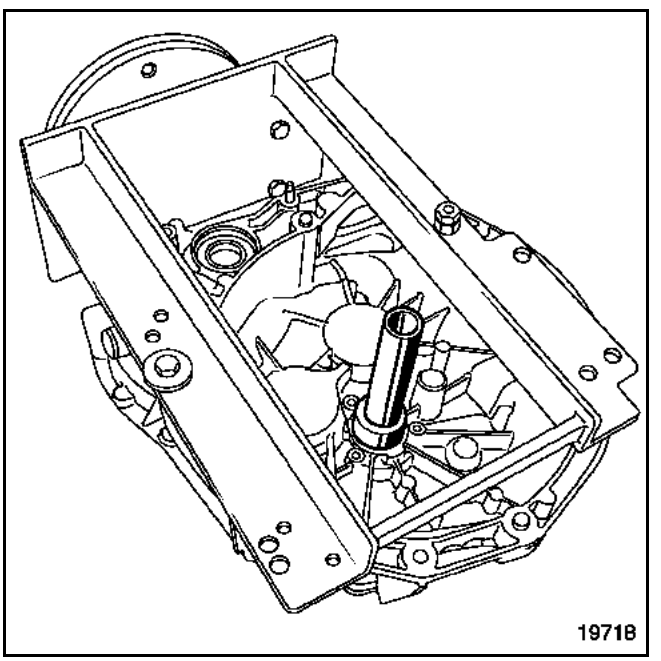

Remove the protector.

Refit the guide tube.

GETtheMANUALS.org

SPECIAL TOOLING REQUIRED	
B. Vi. 1630	Mandrel for fitting differential seal for PK gearbox
B. Vi. 1235	Mandrel for fitting differential seal for PK gearbox

TIGHTENING TORQUES (in daNm)		
Shock absorber base mounting bolts	M16x200	18
Wheel bolt		11

CONSUMABLES
Loctite FRENBLOC: Brake calliper mounting bolt **MOLYKOTE BR2:** Right-hand sunwheel splines

REMOVAL

Remove the engine undertray.

Drain the gearbox.

Remove:
– the wheel arch liner side protectors,
– the front right-hand wheel,
– the upper bolt (3) of the shock absorber base and slacken the lower bolt (4),
– the wheel speed sensor,

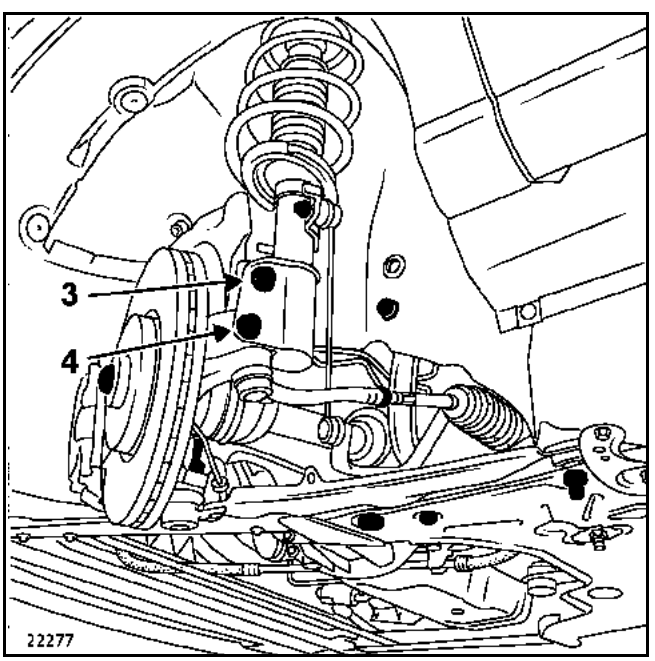

– the intermediate bearing flange.

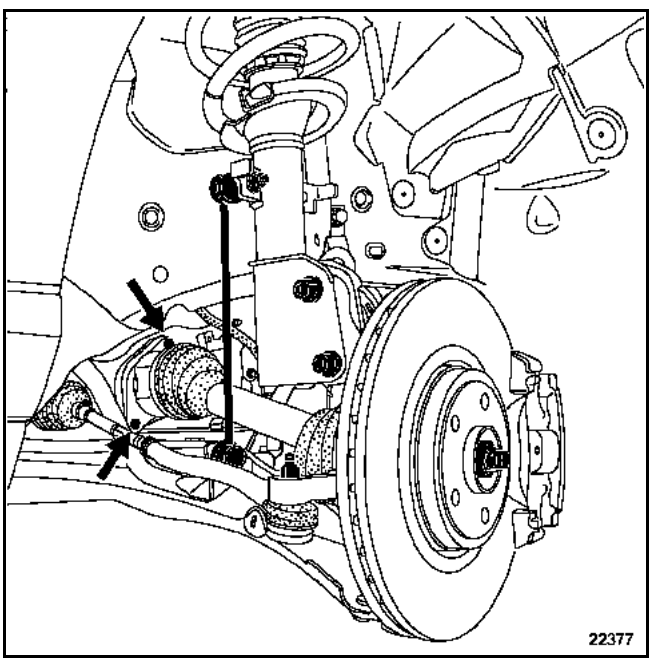

Tilt the stub axle carrier and disconnect the driveshaft (take care not to damage the gaiters during this operation - see **Section 29**).

GETtheMANUALS.org

REPLACING THE SEAL

Remove the O-ring from the sunwheel.

Tap the base of the lip seal using a drift and a small hammer to pivot it in its housing.

Then dislodge the seal using pliers taking care not to damage the splines of the sunwheel.

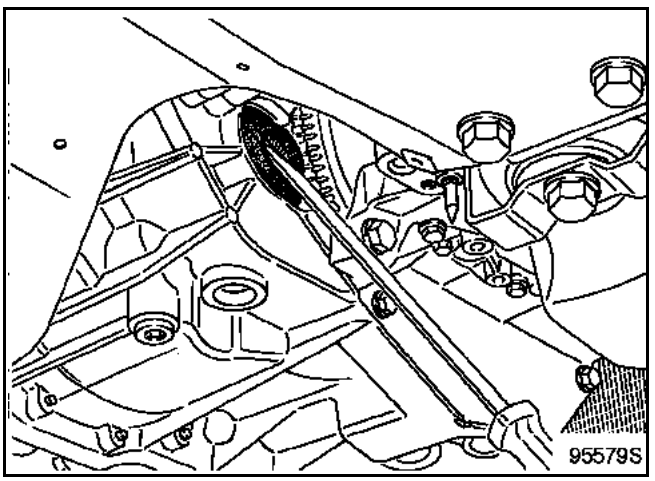

REFITTING

Fit the new seal using tool **B. Vi. 1235**.

NOTE:
Do not lubricate the seal.

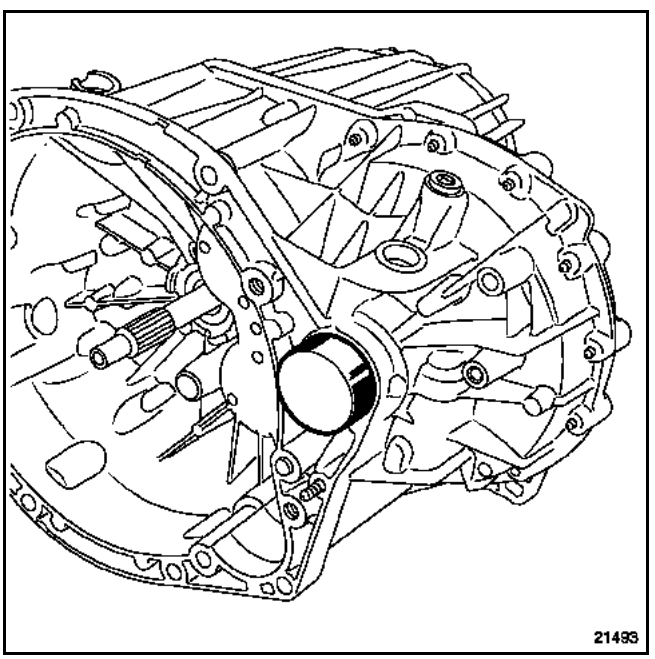

Refit the driveshaft in the reverse of removal.

For vehicles fitted with new seals, refit them using **B. Vi. 1630**.

Then gently remove the protective ring to clip it in the neck of the driveshaft.

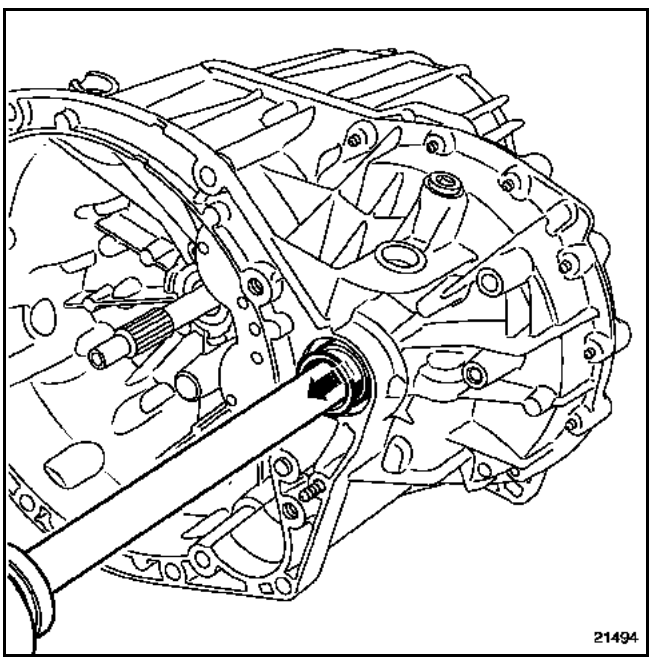

Top up the level of the gearbox (see Section **21: Lubricants**).

GETtheMANUALS.org

SU1

Automatic transmission identification plate.

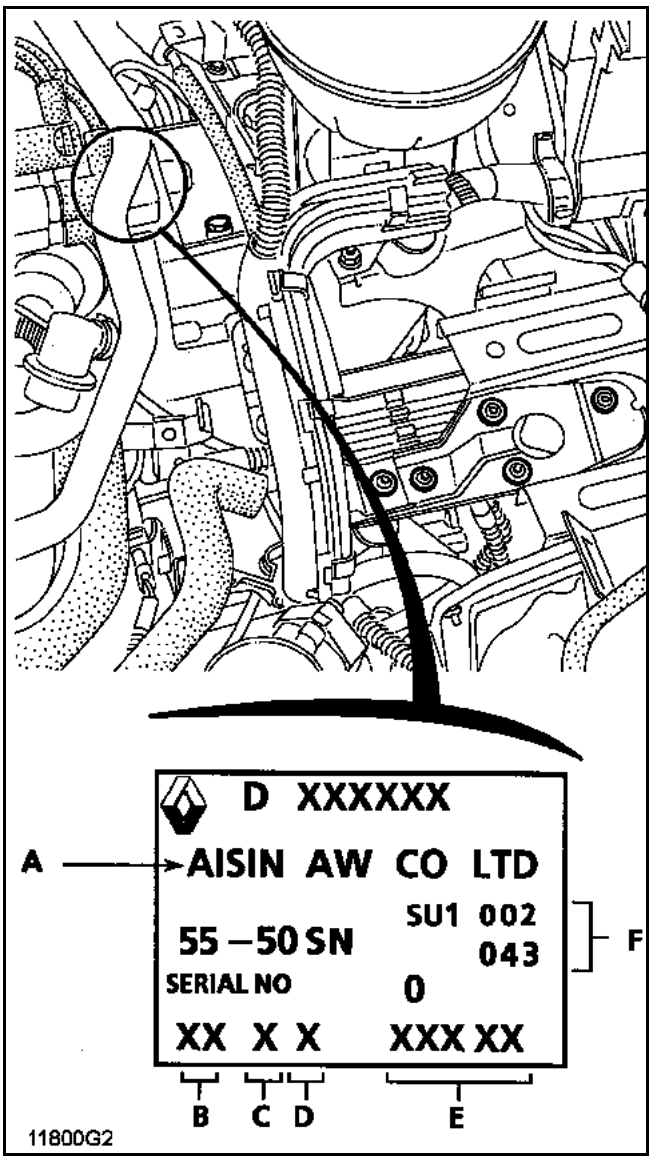

A Manufacturer (Aisin Warner)
B Year of fabrication
C Month of production (Eg.: A = 1, B = 2.... M = 12, except I)
D Gearbox model (55-50 SN)
E Sequential number for one month's production.
F Automatic gearbox suffix

GETtheMANUALS.org

SU1				
Suffix	**Vehicle type**	**Engine**	**Step down**	**Final drive**
001	**BJ0J**	**P9X701**	**56/57**	**25/61**
010	**BJ0V**	**V4Y701**	**56/57**	**25/61**

GETtheMANUALS.org

SPECIFICATIONS

Weight: **90 kg**

VEL SATIS is fitted with an automatic gearbox **SU1** equipped with Shift Lock and Lock Up systems.

The aim of the Shift Lock is to prevent the gear selector lever from being moved without the brake pedal simultaneously being depressed. **For repair operations when the battery is faulty, refer to the notice on board the vehicle.**

The aim of the Lock Up is to connect the automatic gearbox directly to the engine. This function is carried out by a mini "clutch" in the converter. Lock Up is controlled by the automatic transmission computer.

As the automatic transmission is lubricated under pressure, lubrication is only provided when the engine is running.

Consequently, and to avoid serious damage, it is essential to comply with the following instructions:

– never coast the vehicle with the ignition off (i.e. when going down a hill), we cannot stress enough the damage that this may cause,
– never push the vehicle (i.e. to reach a petrol station, except when following the precautions in the **Towing** section).

In addition, the vehicle can only be driven if the engine is running. It is therefore impossible to start the engine of a vehicle with an automatic gearbox by pushing the vehicle.

TOWING

The vehicle should, in preference, be towed in all cases on a tow truck or with the front wheels raised.

However, if this is not possible, the vehicle may as an exception be towed at a speed below **12 mph (20 km/h)** for a maximum distance of **20 miles (30 km)** (lever in N).

IMPORTANT

TOWING WEIGHT (towing a caravan, boat, etc.).

The towed weight must be no more than:

1300 kg for **SU1** automatic transmission.

Exceeding this maximum load on a gradient of **7%** will cause the engine oil and gearbox oil maximum oil temperature to be passed, resulting in a drop in oil pressure and therefore quickly damaging the engine and gearbox.

GETtheMANUALS.org

SU1

Description	Component concerned
MOLYKOTE BR2 grease	Driveshaft relay shaft splines Converter centrer

Parts to be systematically replaced

Parts to be replaced when they have been removed:
– self-locking nuts,
– gaskets,
– rubber seals,
– converter bolts.

GETtheMANUALS.org

SU1

The oil level should be checked every **6000 miles (10 000 km)** in case there is a slight oil leak.

It is only necessary to top up the level in the event of a slight leak.

Capacity in litres

	Mechanism
Total volume*	7.6

* Quantities are given as guidelines. They may vary depending on the temperature.

GETtheMANUALS.org

DRAINING

Oil change is carried out through cap (D).

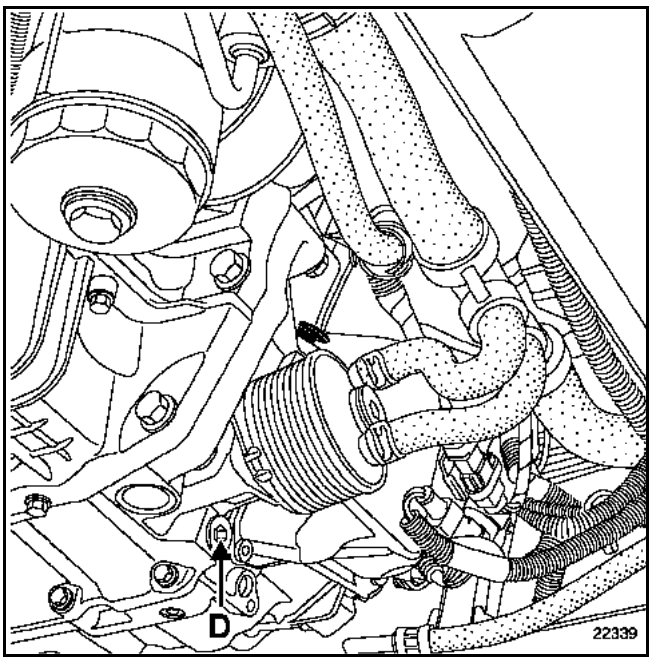

GETtheMANUALS.org

Filling is carried out through gauge hole (A).

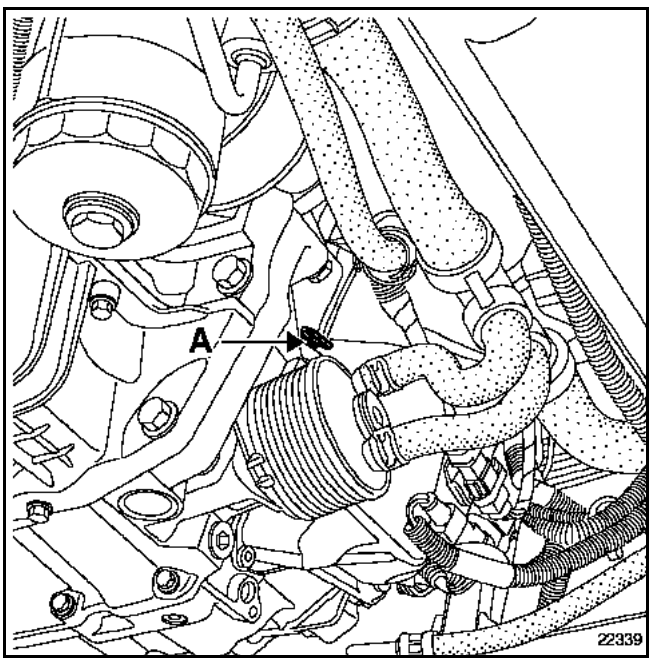

Use a funnel with a **15/100** filter to prevent impurities from entering the system.

The level MUST be checked following the method described below:

1 Place the vehicle on level ground.
2 Fill up the automatic transmission with the same quantity of oil as that measured when draining the oil, to reach an approximate level (about **3.3 litres**).
3 Run the engine at idling speed.
4 Connect the diagnostic tool and establish dialogue with the automatic transmission computer.
5 When a temperature of **75°C ± 1°C** is reached, remove the gauge, the level should be in the area between the two upper graduations (G) (on the **75°C** side).

   If it is not, add oil with the engine running (ensure that the oil is checked at **75°C** and check the level again).

NOTE: the dipstick has a reading at **35°C**, this can only be used for checking and topping up the oil when the engine is running. It is essential to confirm this using the diagnostic tool.

G = maximum level zone

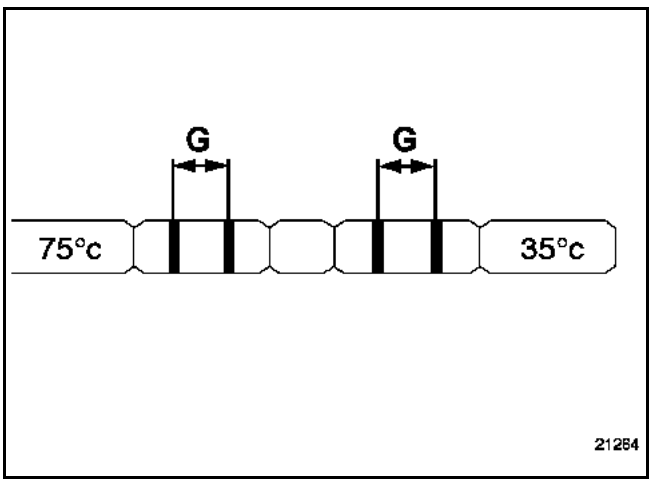

GETtheMANUALS.org

Put the vehicle on a two-post lift.

Lift the vehicle until the wheels are raised off the ground by a few centimetres.

Connect the diagnostic tool.

Establish dialogue with the automatic transmission computer

Monitor the transmission oil temperature parameter.

The check should be carried out when the oil temperature is between **60ºC** and **80ºC**.

Start the engine and put the lever in (D).

Monitor the engine speed parameter:

Establish dialogue with the computer.

Accelerate fully keeping the brakes on.

The front wheels should not rotate.

WARNING: Full load should not be maintained for more than **five seconds**. Beyond this, there is a **high risk of destroying** the converter or the automatic gearbox.

IMPORTANT: Once the measurement has been taken, release the accelerator and **keep the brakes applied until the engine speed is stabilised at idle speed** (risk of damage to the automatic transmission if this is not done).

The engine speed should stabilise at:

P9X 701: 2400 ± 150 rpm

V4Y 701: 2750 ± 150 rpm

A setting point outside the tolerance requires the converter to be replaced.

NOTE: a setting point which is too low may be associated with a lack of engine power.

GETtheMANUALS.org

TIGHTENING TORQUES (in daNm)	
Cover mounting bolt	1.2
Induction cover mounting bolt	1
Distributor mounting bolt	1
Dipstick mounting bolt	0.5

REMOVAL

Put the vehicle on a two-post lift.

Disconnect the battery.

Remove the engine undertray.

Drain the automatic transmission through the plug (A).

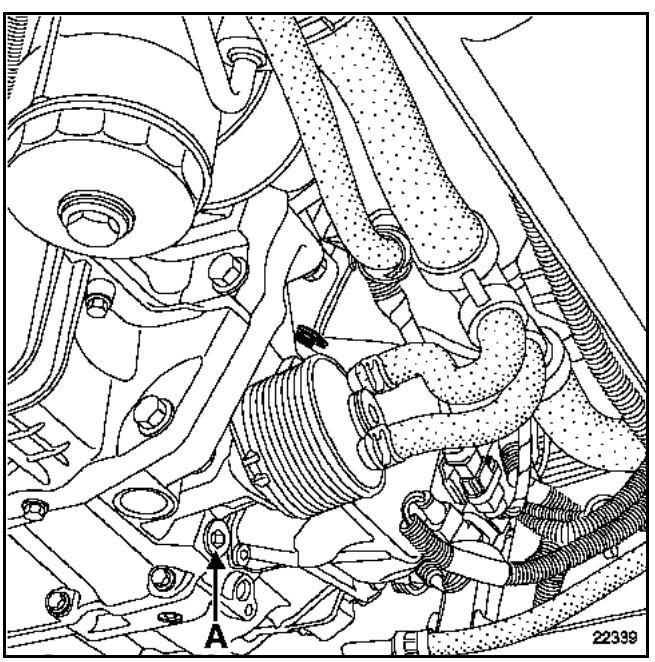

Remove:
– the battery;
– the fuse box,
– the automatic transmission computer,
– the battery mounting.

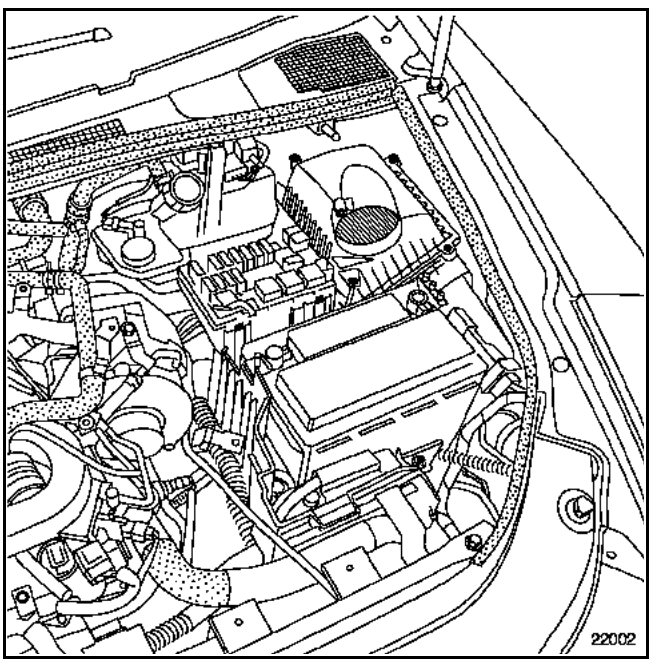

Release:
– the injection computer,
– the injection computer tray.

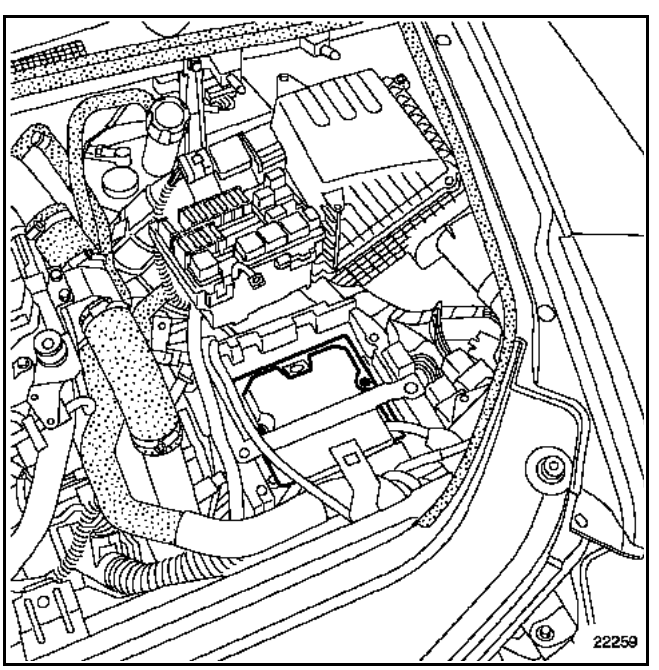

GETtheMANUALS.org

Disconnect the harness (1).

Remove:
– the wiring channel support (2) and release it,
– the engine undertray.

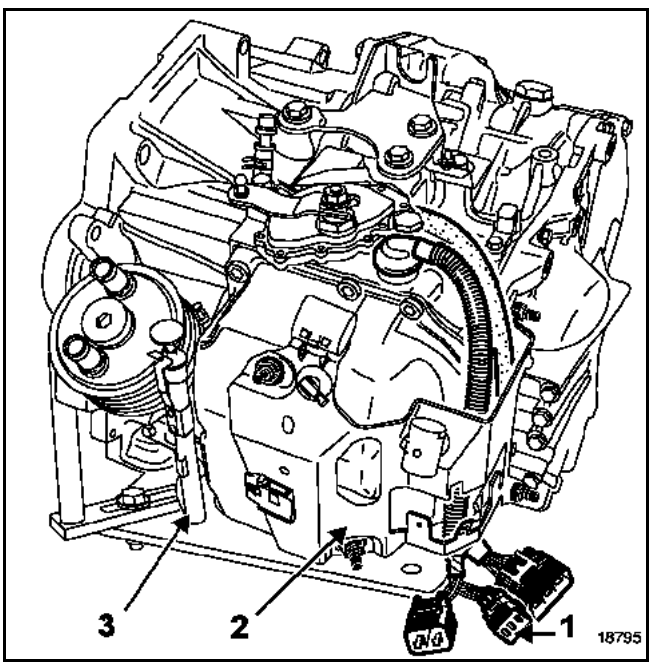

Place a clean container under the automatic gearbox to collect the oil.

Remove the housing (4) from the hydraulic distributor, by releasing it with a very thin blade (without damaging the contact surfaces).

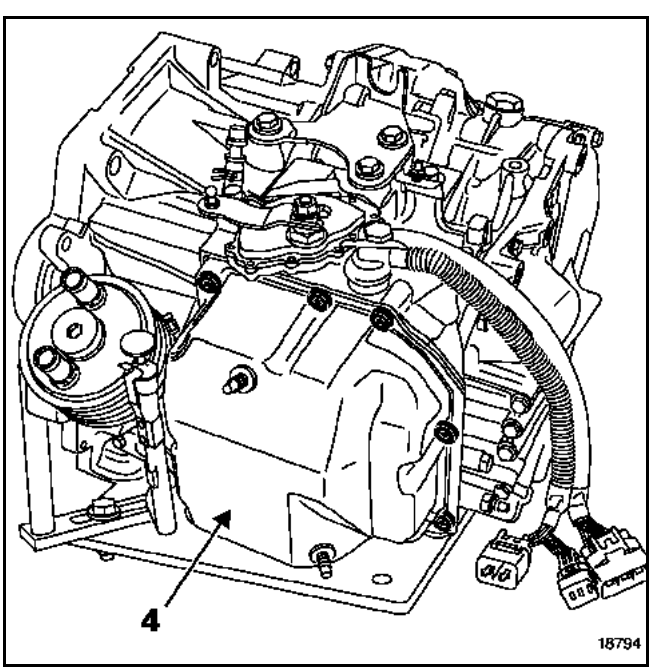

Disconnect and separate the bulkhead (G).

Remove:
– the six mounting bolts (5) of the hydraulic distributor,

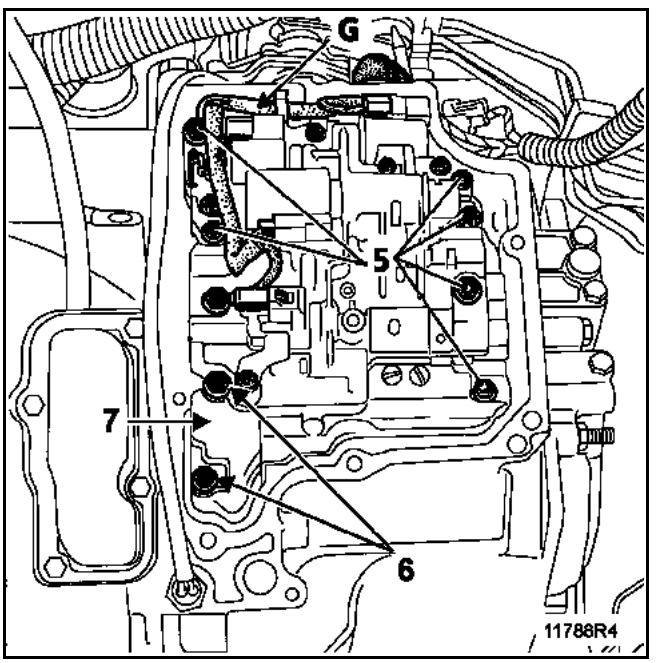

– the mounting bolts (6), the induction cover (7) and the paper gasket,

GETtheMANUALS.org

– the distributor by tilting it slightly in order to release the control (H) from the automatic gearbox selector,

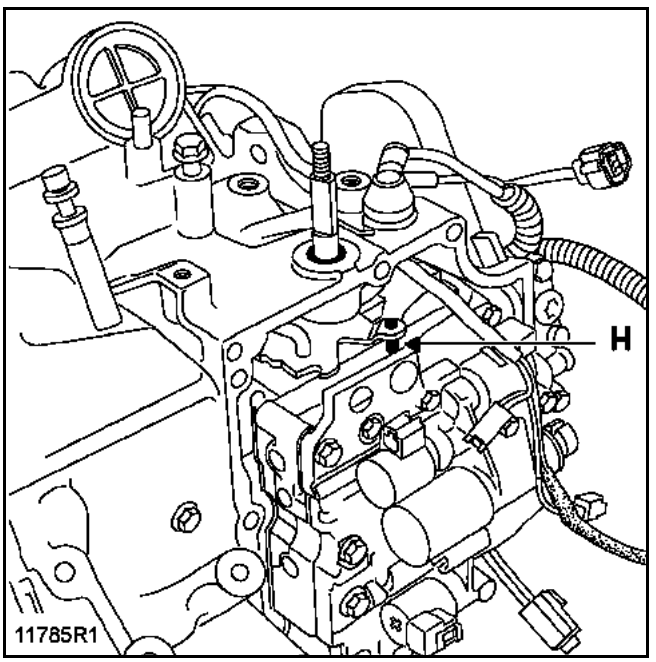

– the two seals (J) ensuring that no dirt enters the automatic gearbox.

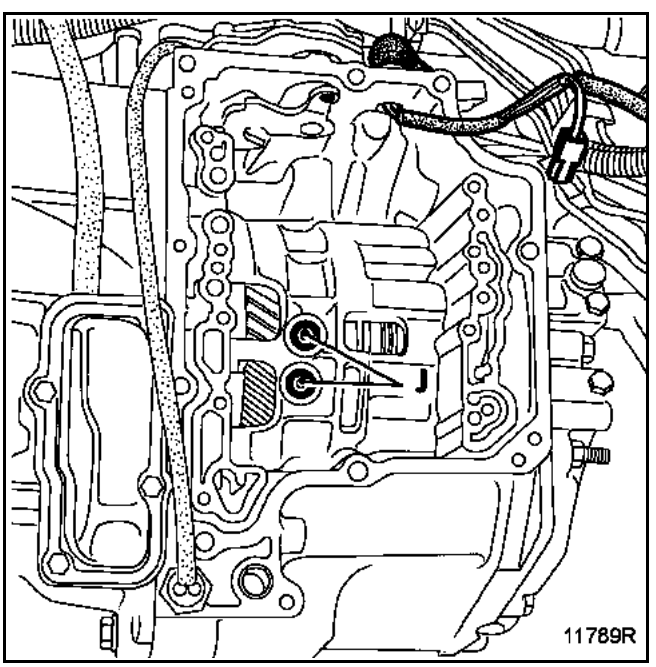

REFITTING

Clean the sealing surfaces on the automatic gearbox, taking care not to damage the surface.

Clean the sealing surfaces of the hydraulic distributor housing.

Clean the bolts of the hydraulic distributor, ensuring that all remaining glue particles are removed.

The seals (J) and the paper gasket of the induction cover must be replaced.

Refit in the reverse order to removal.

Tighten the bolts of the distributor to the recommended torque.

WARNING: the bolts are of different lengths.

GETtheMANUALS.org

Clean the surfaces of the automatic gearbox housing.

Apply a bead of **LOCTITE FRENETANCH** of approximately **3 mm** thickness.

Put a drop of **Loctite FRENETANCH** on the bolts of the hydraulic distributor housing and tighten them to the recommended torque in the order shown below.

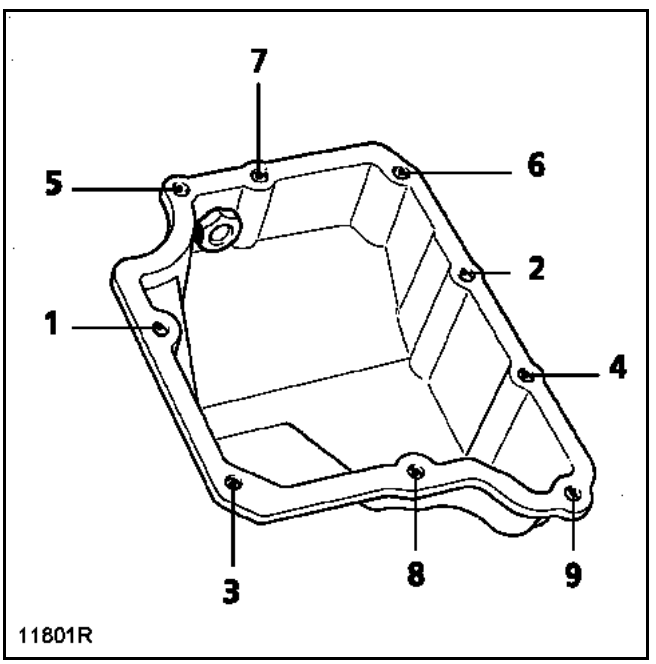

Fill the automatic gearbox with oil, following the instructions (see relevant section).

GETtheMANUALS.org

SPECIAL TOOLING REQUIRED	
Mot. 1367	Engine retaining device
Mot.1367-02	Engine support
T. Av. 476	Ball joint extractor
Mot. 1372	Set for removing tamperproof screws

EQUIPMENT REQUIRED
Hydraulic jack

TIGHTENING TORQUES (in daNm)	
Wheel bolt	11
Brake caliper mounting bolt	10.5
Steering ball joint nut	3.7
Lower ball joint nut	11
Shock absorber base bolt	18
Suspended mounting nut on body	4.5
Suspended mounting screw on box	6.2
Front left side member bolt	4.4
Sub-frame/engine tie-bar bolt	10.5
Starter mounting bolt	4.4
Engine/engine tie-bar bolt	18
Gearbox edge bolt Ø 10	4.4
Gearbox edge bolt Ø 12	6.2
Gearbox edge nut	6.2
Gearbox edge studs	0.6
Torque converter starter plate	2 + 40°
Engine sub-frame	10.5
Steering shaft yoke mounting bolt	2.5

REMOVAL

This method applies only to the V4Y engine.

Put the vehicle on a two-post lift.

Disconnect the battery.

Remove:
– the front wheels,
– the style cover,
– the battery,
– the fuse box,
– the automatic transmission computer,
– the battery tray,
– the wiring harness from the battery tray,
– the air hose on the flowmeter,
– the air distribution unit and the flowmeter,
– the upper engine tie-bar.

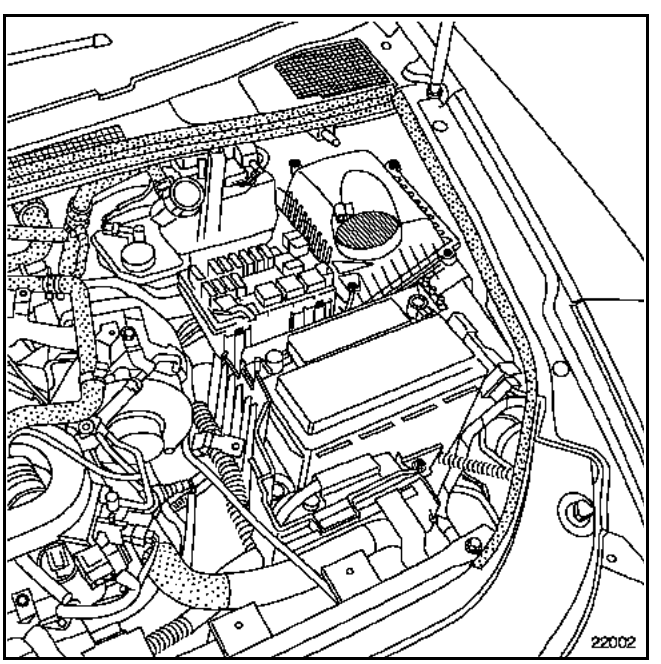

GETtheMANUALS.org

Remove the injection computer with its support from the side.

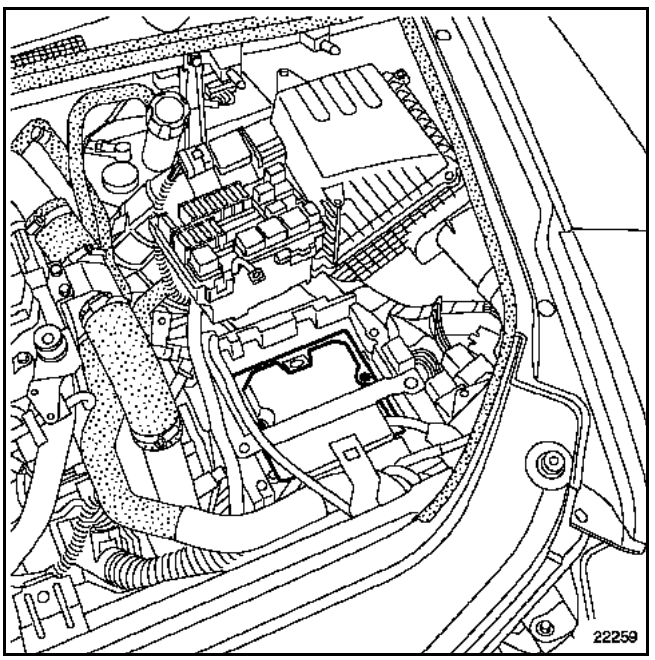

Disconnect:
– the ball joint (1) from the multifunction switch cable,
– the cable (2) of the multifunction switch by releasing the sleeve stop.

NOTE: do not move the orange ring during this operation. This could break during removal or refitting. If this happens, DO NOT REPLACE THE CONTROL CABLE, as its absence will not affect the operation of the system.

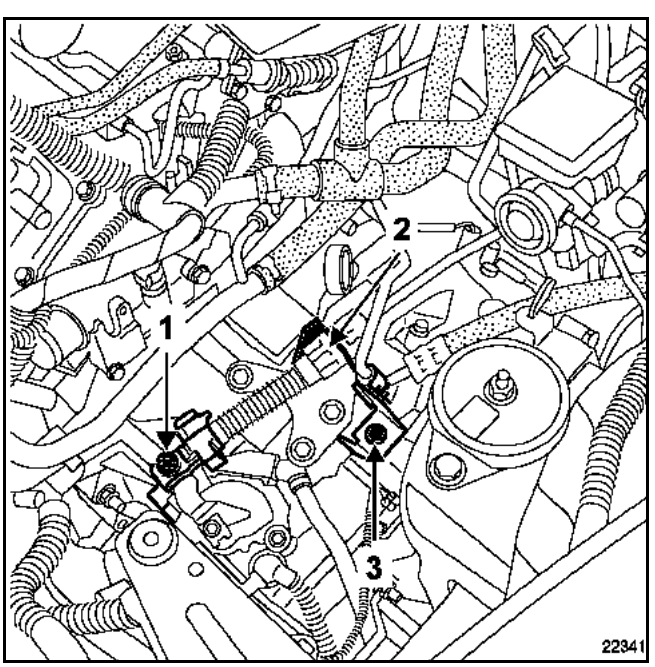

– remove the lug (3).

Disconnect:
– the input speed sensor connector (4),
– the output speed sensor connector (5).

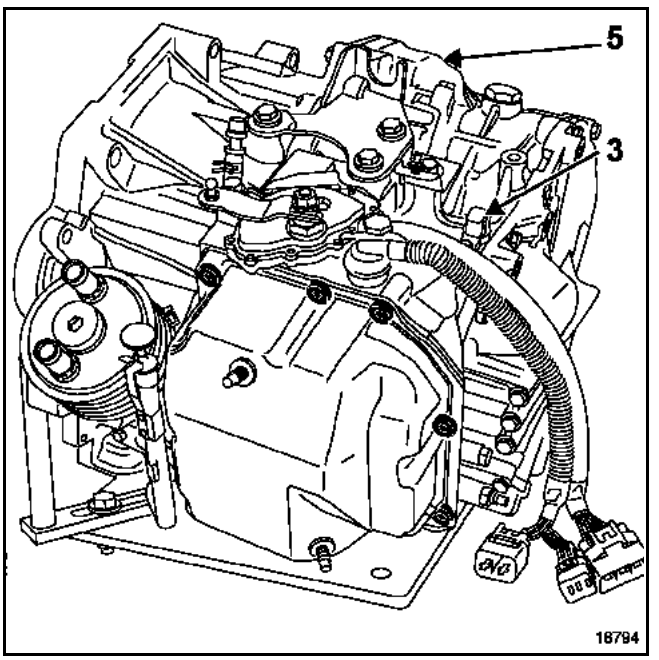

Fit the hose clamps and disconnect the water exchanger.

Remove the TDC located under the gearbox.

Unfasten the harness from the gearbox.

Remove:
– the TDC sensor,
– the engine undertray,
– the wheel arches,
– the left and right driveshafts,
– the engine tie-bar (6),

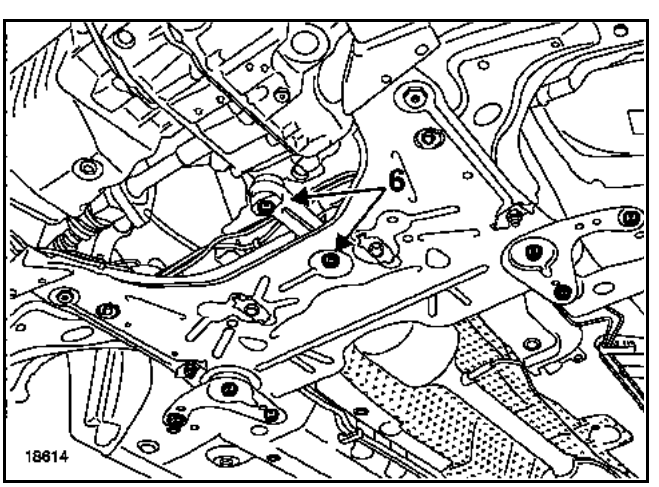

GETtheMANUALS.org

– the left-hand tie-rods (7),
– the aluminium side member (8).

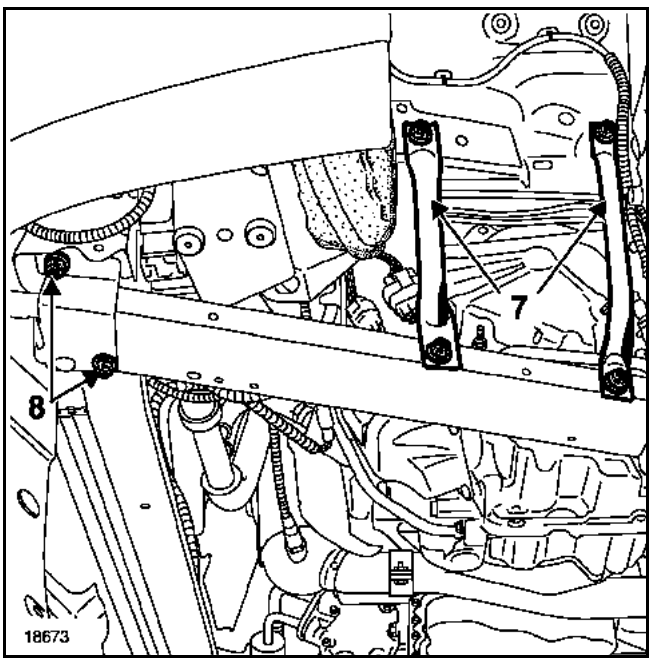

Remove the sub-frame (see **section 31**).

Release the automatic gearbox harness (1).

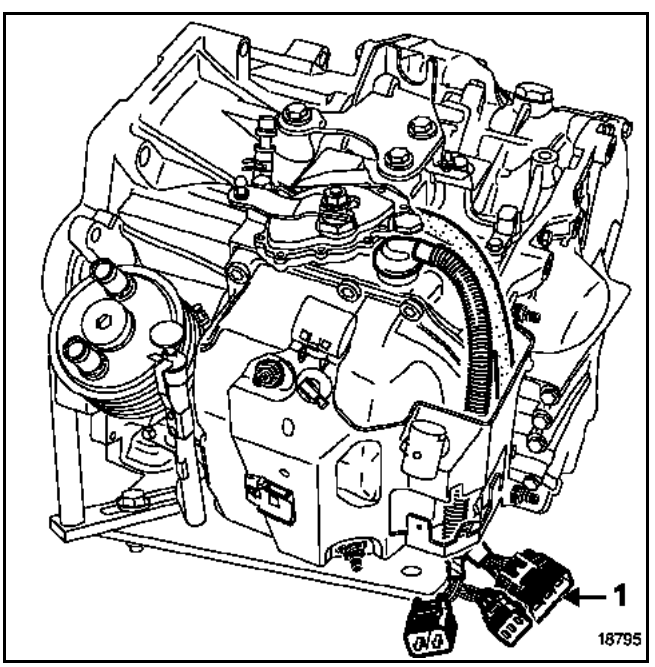

Remove the converter protection plate.

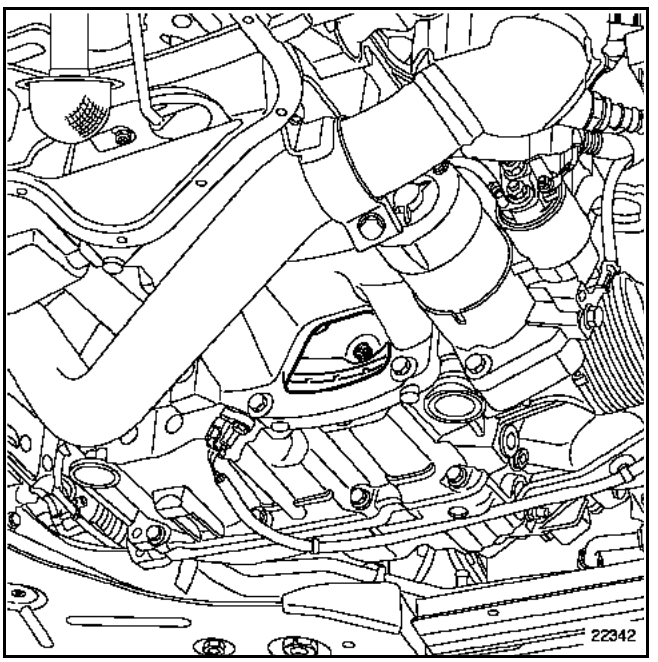

Rotate the crankshaft in a clockwise direction to access the six starter plate / converter connecting bolts and remove them.

Remove the starter motor.

Remove the front precatalyzer (see **section 19B Exhaust**).

Put engine support tools **Mot. 1367 and 1367-02** in position.

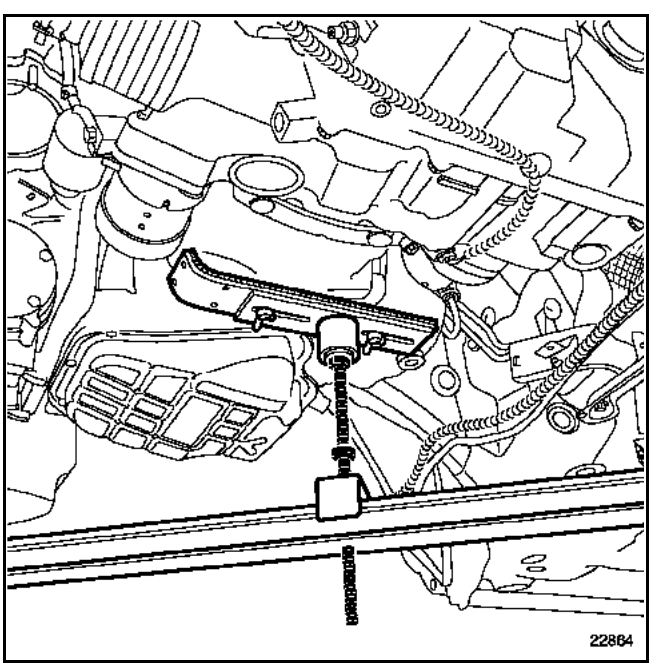

GETtheMANUALS.org

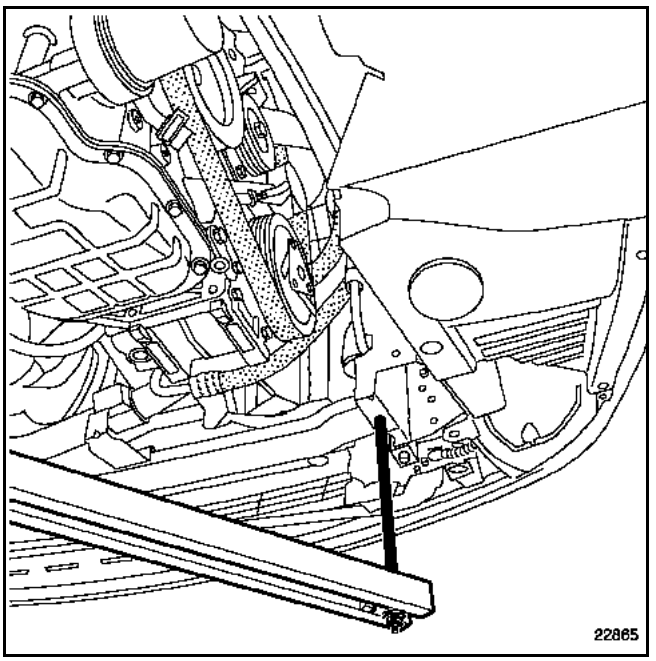

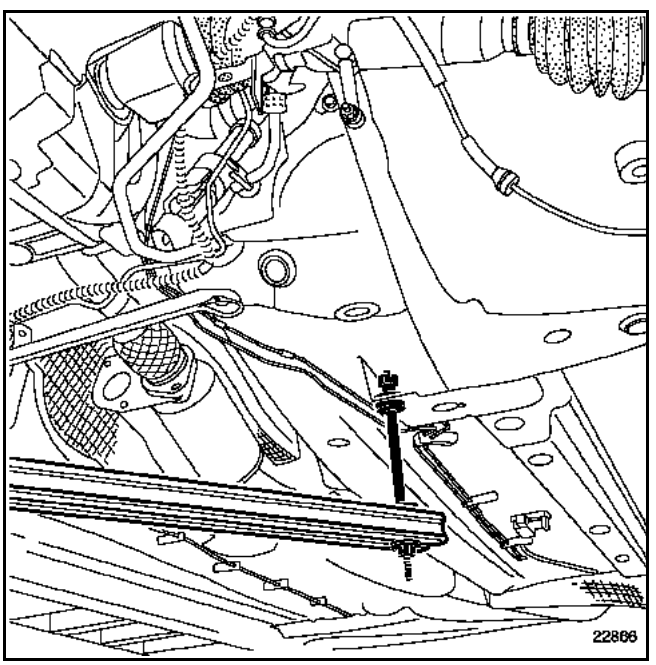

IMPORTANT: the engine mounting must be positioned as illustrated.

Remove:
– the upper gearbox edge bolts and studs,
– the gearbox mounting,
– tilt the engine / automatic gearbox assembly as low down as possible.

IMPORTANT: Be careful not to damage the air conditioning compressor.

Position the hydraulic jack.

Remove the lower gearbox edge bolts and studs.

Disconnect the automatic gearbox from the engine, taking care not to release the converter.

GETtheMANUALS.org

REFITTING

Put the vehicle and automatic gearbox in position D.

Refitting is the reverse of removal.

Special notes:

Check that the starter plate is not damaged (**warping tolerance 0.2 mm** on the external diameter).

Check that there is a centring dowel on either side of the cylinder block.

Using **MOLYKOTE BR2**, grease the converter centring pin in the crankshaft.

IMPORTANT: check that the converter is correctly inserted into the automatic gearbox using a flat rule and a tape measure. Check that the distance (X) between the stud and the rule is approximately 14 mm and that the contact surfaces are clean.

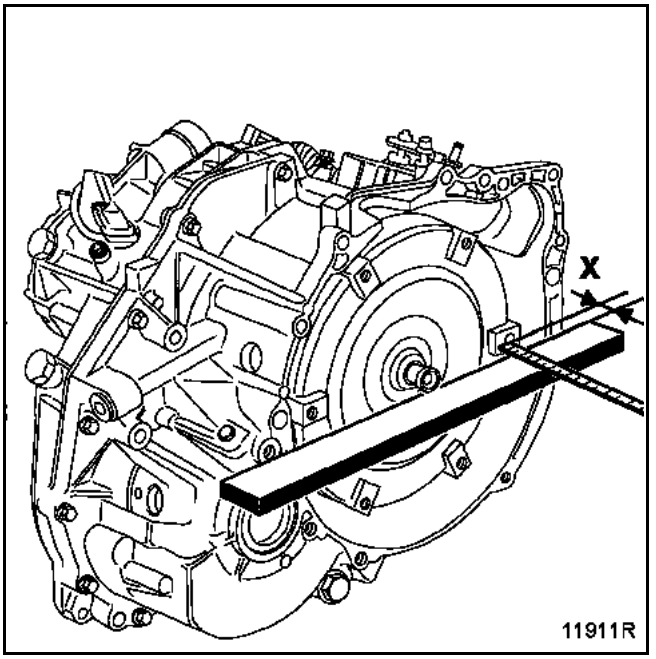

The six torque converter mounting bolts must be replaced.

Position the starter plate using a socket spanner on the crankshaft pulley.

Use the correct order when tightening the mounting bolts on the gearbox support (see section **19D Suspended engine mounting**).

GETtheMANUALS.org

NOTE: when refitting the driveshafts, ensure that they are inserted straight so as not to damage the differential seals.

TIGHTEN ALL THE BOLTS, NUTS AND STUDS TO THE RECOMMENDED TORQUE.

Check and if necessary adjust the control cable (see relevant section).

GETtheMANUALS.org

SPECIAL TOOLING REQUIRED	
Mot.1202-01	Pliers for large hose clips
Mot.1202-02	Pliers for large hose clips
Mot. 1372	Set for removing tamperproof screws
Mot. 1448	Remote operation clip pliers for cooling system hose clips
Mot. 1390	Adjustable engine support tool
T. Av. 476	Ball joint extractor tool
EQUIPMENT REQUIRED	
Workshop hoist	

TIGHTENING TORQUES (in daNm and/or °)	
Gearbox edge bolt	6.2
Gearbox edge nut	6.2
Converter bolt	2+40°
Gearbox edge stud	0.6
Starter mounting bolt	4.4

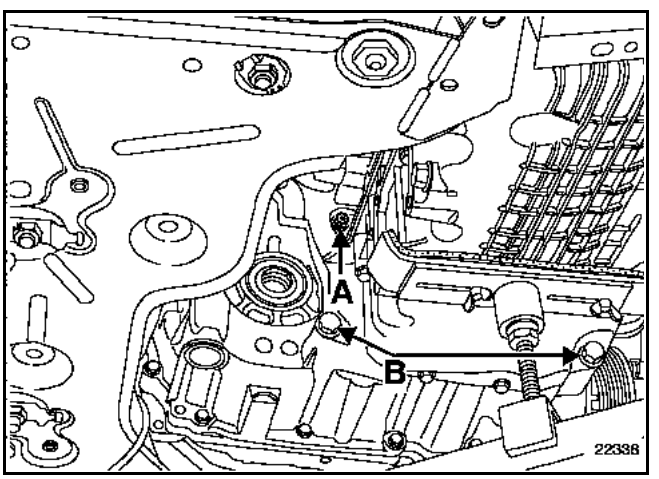

REMOVAL

This method applies only to the P9X engine.

During this operation, the vehicle must be secured to the lift with a strap to prevent it from becoming unbalanced.

Refer to Section 02 Underbody lift for positioning the belt.

REMOVING/REFITTING THE AUTOMATIC GEARBOX requires the removal/refitting of the engine and gearbox assembly (See section 10A: engine and lower engine assembly "Engine and gearbox").

NOTE: to assist separation of the engine and the gearbox, it is advisable to remove:
– the converter bolts (A) and the gearbox edge lower bolts (B) before removing the engine and gearbox assembly.

GETtheMANUALS.org

REFITTING

Put the vehicle and automatic gearbox in position D.

Refitting is the reverse of removal.

Special notes:

Check that the starter plate is not damaged (**warping tolerance 0.2 mm** on the external diameter).

Check for the presence of the centring dowels (F).

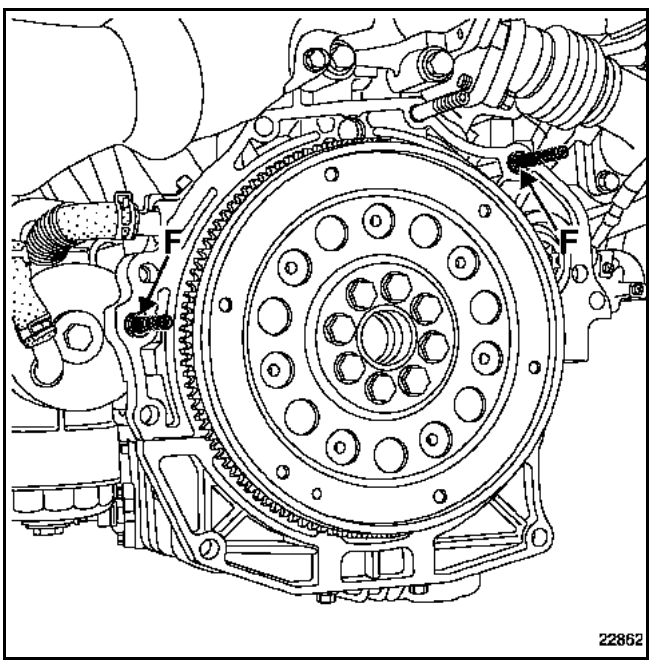

Using **MOLYKOTE BR2**, grease the converter centring pin in the crankshaft.

IMPORTANT: check that the converter is correctly inserted into the automatic gearbox using a flat rule and a tape measure. Check that the distance (X) between the stud and the rule is approximately 26.5 mm and that the contact surfaces are clean.

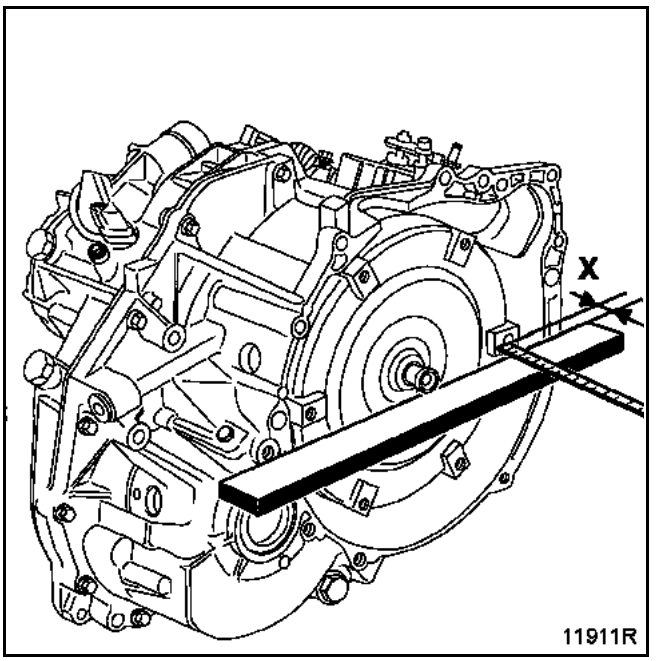

The six torque converter mounting bolts must be replaced.

Position the starter plate using a socket spanner on the crankshaft pulley.

Use the correct order when tightening the mounting bolts on the gearbox support (see section **19D Suspended engine mounting**).

GETtheMANUALS.org

NOTE: when refitting the driveshafts, ensure that they are inserted straight so as not to damage the differential seals.

TIGHTEN ALL THE BOLTS, NUTS AND STUDS TO THE RECOMMENDED TORQUE.

Check and if necessary adjust the control cable (see relevant section).

GETtheMANUALS.org

SPECIAL TOOLING REQUIRED	
Mot. 919-02	Flywheel locking tool
EQUIPMENT REQUIRED	
Engine support tool	

TIGHTENING TORQUE (in daNm and/or º)	
Starter plate bolt	4.5 + 50° ± 5°

This operation can only be performed after having removed the automatic gearbox (see relevant section).

REMOVAL

Position tool **Mot. 919-02**.

Remove:
– the eight bolts (V),
– the starter plate.

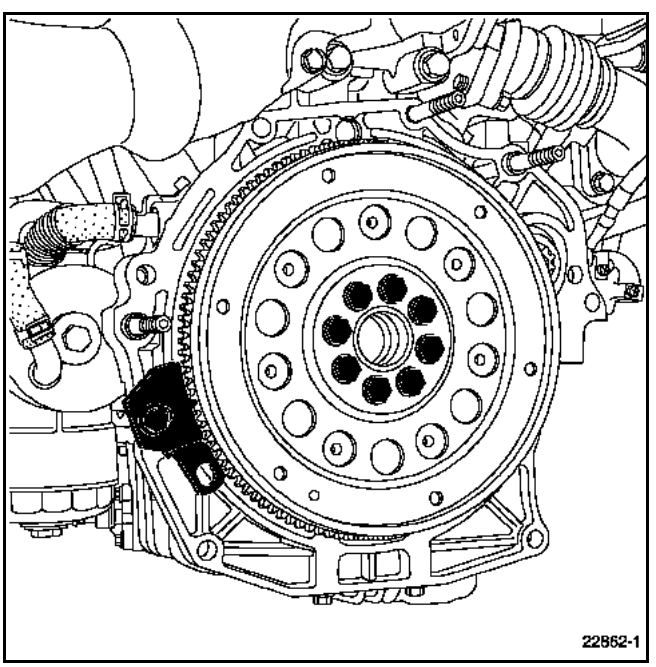

The maximum permissible warping on the starter plate is **0.2 mm** on the external diameter.

REFITTING

Fit the starter plate, ensuring it is correctly positioned in relation to the centring pin (**3**).

Insert the bolts into the starter plate and tighten them to the recommended torque (angular tightening).

Fit tool **Mot. 919-02** in order to lock the starter plate correctly.

TIGHTEN ALL THE BOLTS, NUTS AND STUDS TO THE RECOMMENDED TORQUE.

GETtheMANUALS.org

EQUIPMENT REQUIRED
Engine retaining tool

TIGHTENING TORQUE (in daNm and/or º)	
Starter plate bolt	4.5 + 50° ± 5°

This operation can only be performed after having removed the automatic gearbox (see relevant section).

REMOVAL

Remove:
– the eight bolts (V),
– the starter plate.

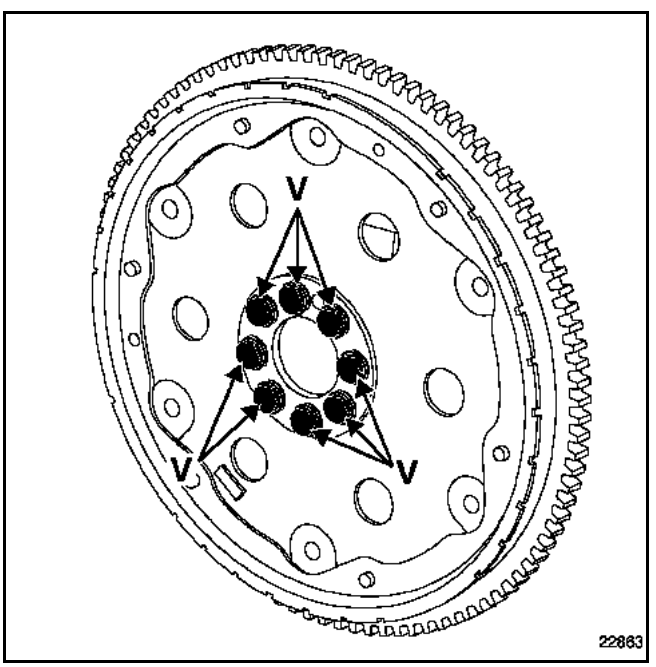

The maximum permissible warping on the starter plate is **0.2 mm** on the external diameter.

REFITTING

Fit the starter plate, ensuring it is correctly positioned in relation to the centring pin (3).

Insert the bolts into the starter plate and tighten them to the recommended torque (angular tightening).

Fit tool **Mot. 582** in order to lock the starter plate correctly.

TIGHTEN ALL THE BOLTS, NUTS AND STUDS TO THE RECOMMENDED TORQUE.

GETtheMANUALS.org

SPECIAL TOOLING REQUIRED	
Mot. 1367	Engine retaining device
Mot.1367-02	Engine support
Mot. 1372	Set for removing tamperproof screws
T. Av. 476	Ball joint extractor tool
B. Vi. 1611	Differential output seal mounting tool

THIS METHOD APPLIES ONLY TO THE V4Y ENGINE.

REMOVAL

The removal/refitting of the automatic transmission is necessary for the replacement of the differential output seal.

To carry out this operation, refer to section **23A Automatic gearbox - Removing/refitting**.

NOTE: to make the gearbox oil change easier, it is advisable to carry out this operation before removing the automatic transmission from the vehicle.

To carry out this operation, refer to section **23A Automatic gearbox - Oil changes**.

REFITTING

The seal is inserted in position with tool **B. Vi. 1611.**

Guide the assembly until the tool is touching the automatic gearbox housing.

Refit the gearbox to the vehicle by referring to Section **23A Automatic gearbox - Removing/refitting**.

TIGHTEN ALL NUTS, BOLTS AND STUDS TO THE RECOMMENDED TORQUE.

Fill the automatic gearbox and check the level.

To carry out this operation, refer to section **23A Automatic gearbox - Filling up**.

GETtheMANUALS.org

SPECIAL TOOLING REQUIRED	
T. Av. 476	Ball joint extractor tool
B. Vi. 1611	Differential output seal mounting tool

TIGHTENING TORQUES (in daNm)	
Brake caliper column bolts	0.7
Lower ball joint nut	11
Shock absorber base bolt	18
Wheel bolt	11
Steering ball joint nut	3.7
Drain plug	2.2

The right-hand driveshaft must be removed to replace a differential output seal.

REMOVAL

Put the vehicle on a two-post lift.

Disconnect the battery.

Drain the automatic gearbox (see section **23A Automatic gearbox - Oil changes**).

Remove the faulty differential output seal using a screwdriver or a hook, taking care not to scratch the contact surfaces.

Warning: do not drop the spring of the seal into the automatic gearbox.

REFITTING

The seal is inserted in position with tool **B. Vi. 1611.**

Guide the assembly until the tool is touching the automatic gearbox housing.

Refitting is the reverse of removal.

TIGHTEN ALL NUTS, BOLTS AND STUDS TO THE RECOMMENDED TORQUE.

Fill up the automatic gearbox and check the level (see section **23A Automatic gearbox - Filling up**).

GETtheMANUALS.org

SPECIAL TOOLING REQUIRED	
B. Vi. 465	Tool for extracting a converter seal
B. Vi. 1402	Tool for centring a converter ring (from kit B. Vi. 1400-01)

This operation is carried out with the automatic gearbox removed.

REMOVAL

Remove:
– the converter,
– the sealing ring (A) using tool **B. Vi. 465,** with the ring marked 1, by inserting it straight and then turning it through approximately half a turn and extracting the seal by progressively tightening the extractor bolt.

IMPORTANT: TAKE CARE to remove the spring from the seal.

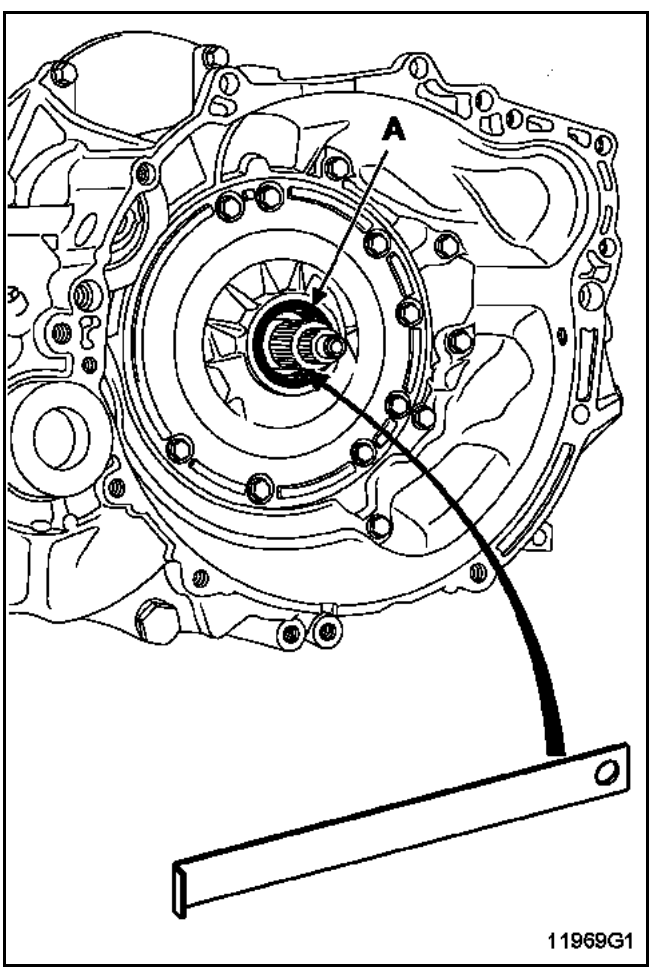

REFITTING

The lip seal (oiled) is inserted in position with tool **B. Vi. 1402**; take care not to introduce any dirt when inserting the seal.

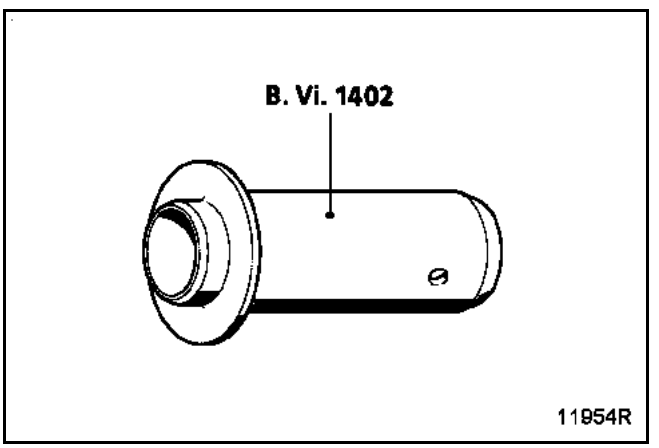

Refit the converter, lubricating its channel with automatic transmission oil.

Check using a ruler: distance X must be approximately **14 mm** for the **V4Y** engine and **26.5 mm** for the **P9X** engine.

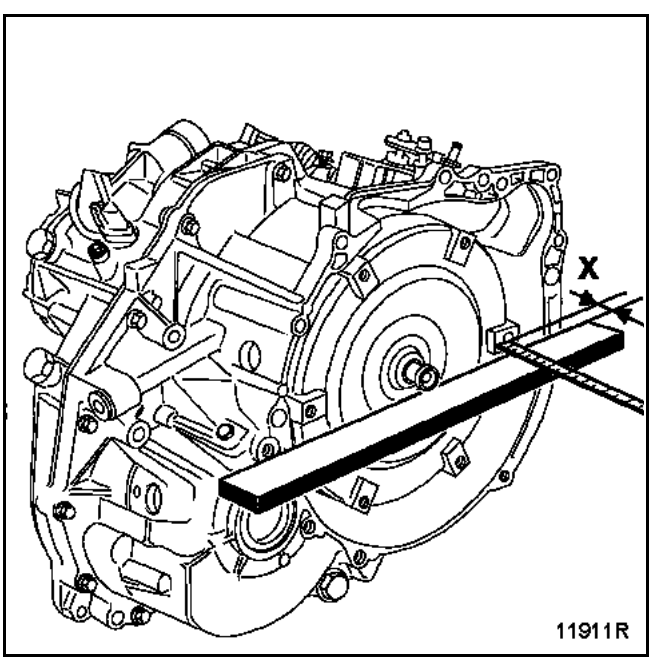

GETtheMANUALS.org

SPECIAL TOOLING REQUIRED
B. Vi. 1401 Guide tube

This operation is performed after having removed the multifunction switch (see relevant section).

REMOVAL

Remove selector shaft seal (A) using a small screwdriver, taking care not to damage the shaft and the seal face.

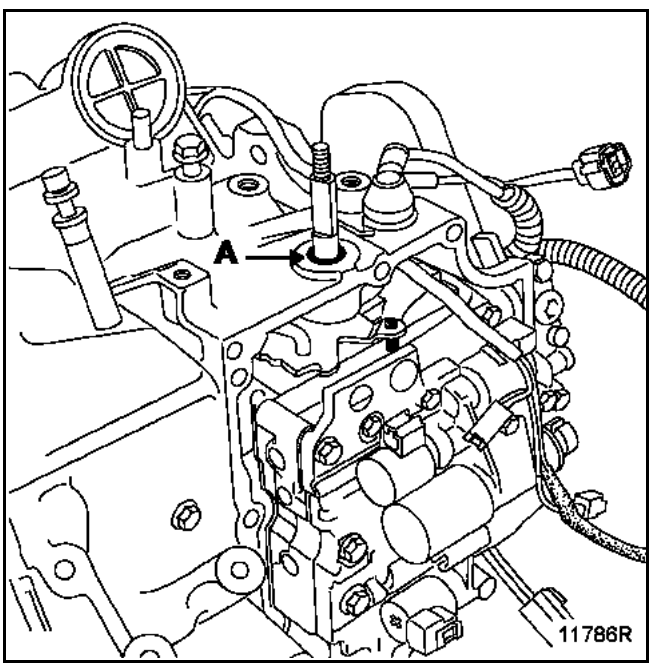

REFITTING

Refit the seal (lubricated with automatic gearbox oil).

Insert tool **B. Vi. 1401** and tap it gently with a rubber mallet to ensure it is inserted fully.

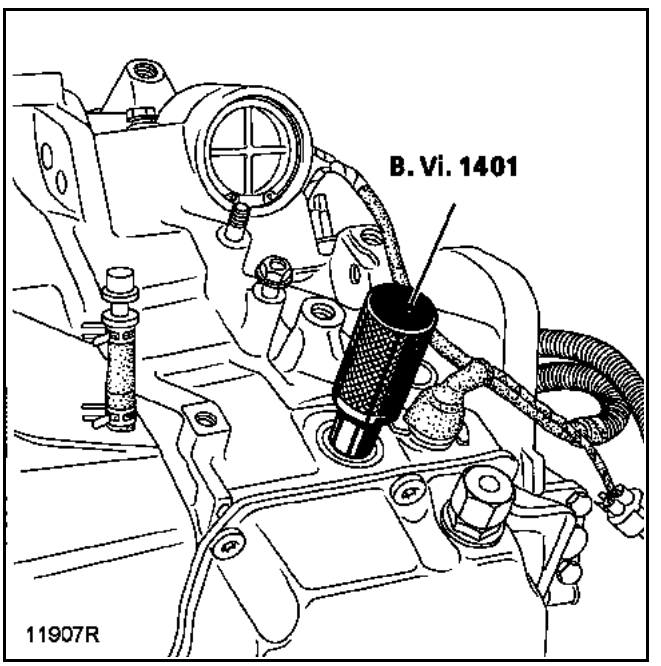

GETtheMANUALS.org

SPECIAL TOOLING REQUIRED	
B. Vi. 1612	Multifunction switch adjusting tool

TIGHTENING TORQUES (in daNm)	
Multifunction switch mounting bolt	2.5
Dipstick guide-tube mounting bolt	0.5
Selector lever mounting bolt	1.5

REMOVAL

Put the vehicle on a two-post lift.

Shift the lever to N.

Remove:
– the engine covers,
– the battery (A),
– the fuse box (B)
– the automatic gearbox computer,
– the battery tray (C),
– the wiring harness from the battery support.

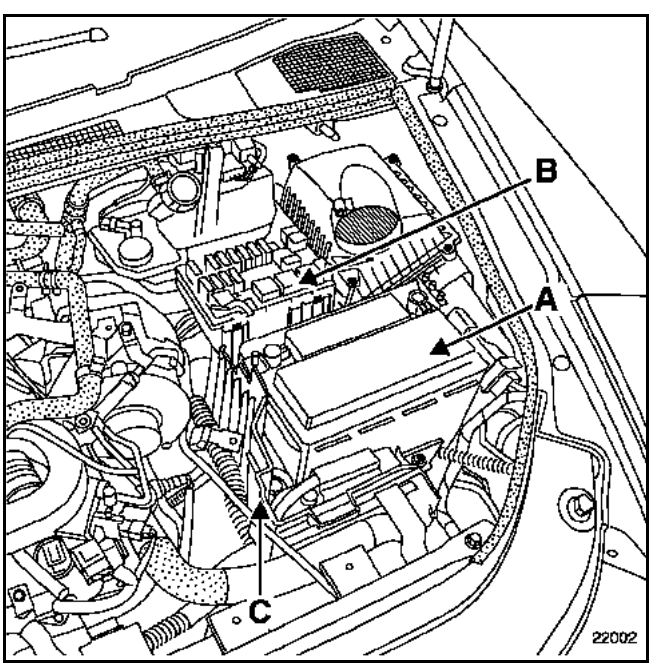

Remove the injection computer and its support.

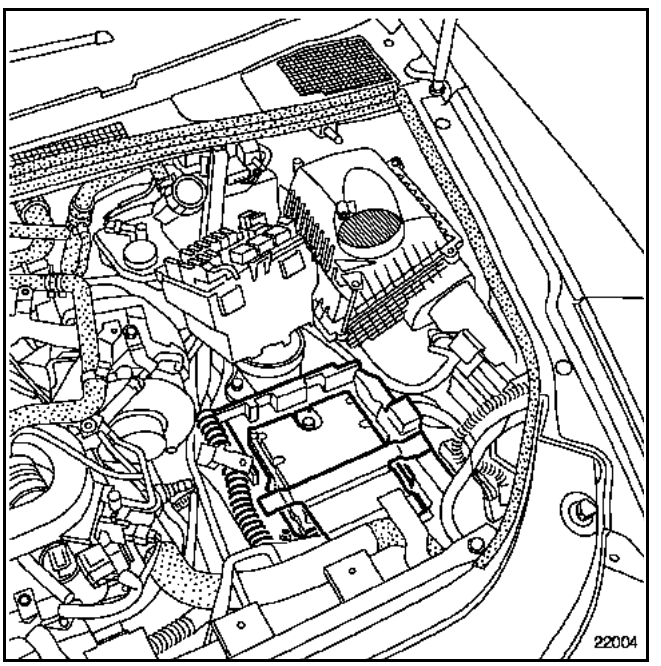

Unclip and disconnect the wiring (D).

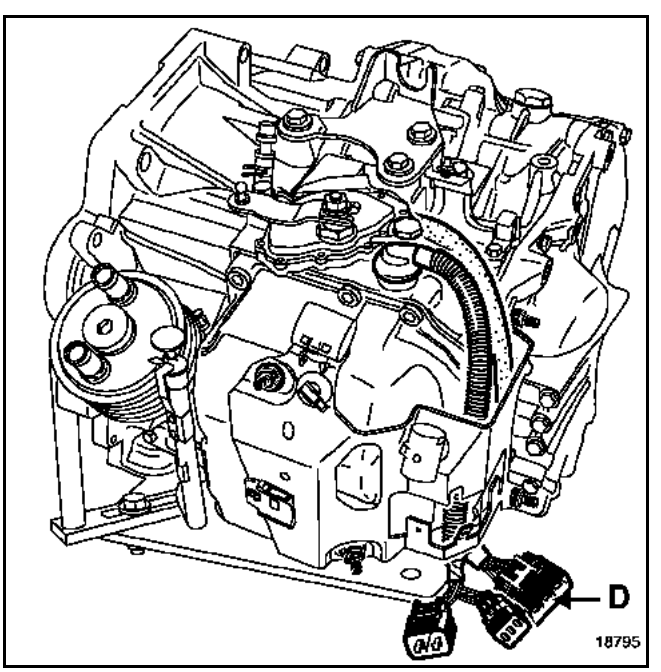

GETtheMANUALS.org

Remove:
– the control cable,

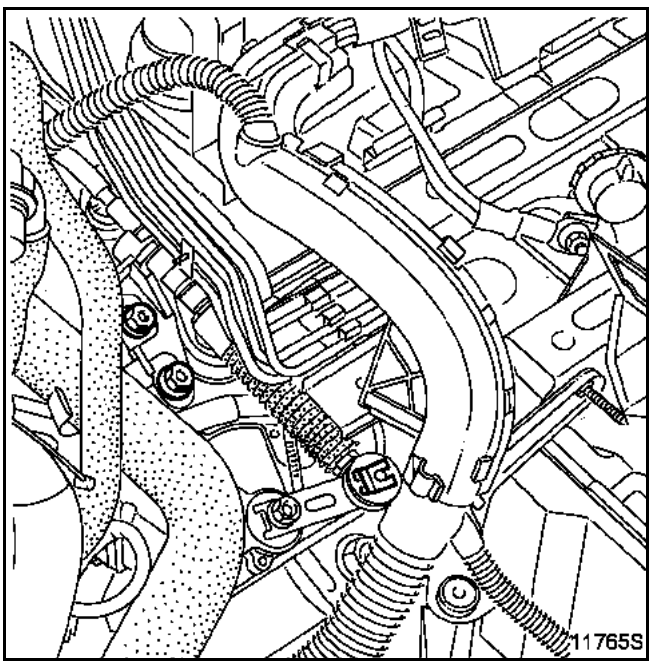

– the selector lever (D), holding it using a flat spanner at (E) on the selector shaft and slacken the nut (2).

Release the lock washer and remove the nut (3).

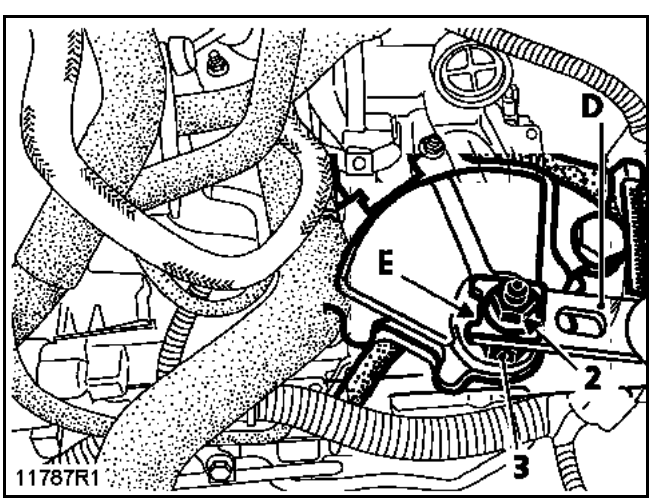

IMPORTANT: never slacken the selector lever bolt without holding it as this may damage the automatic gearbox.

Remove the two bolts (4) and release the multifunction switch.

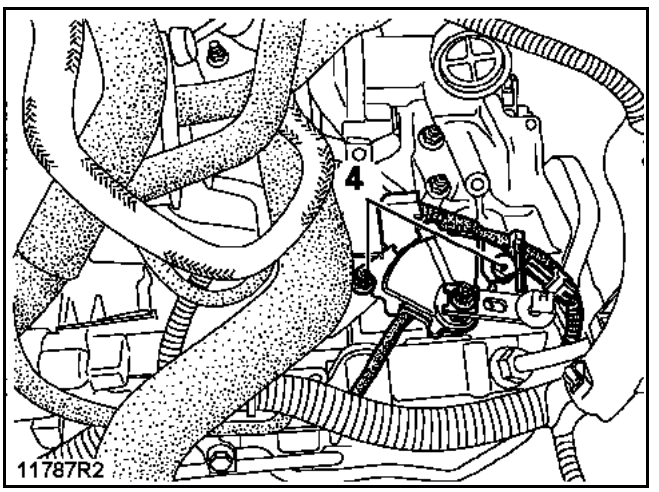

REFITTING

Refitting is the reverse of removal.

Ensure the wiring is correctly positioned when refitting.

Replace the selector shaft seal if it is damaged (see relevant section).

NOTE: it is important to remember to lock the selector shaft nut.

Tighten all nuts and bolts to the recommended torque.

Adjust the multifunction switch (see relevant section).

Check and if necessary adjust the control cable (see relevant section).

Check that it works and that the gears can be changed correctly.

GETtheMANUALS.org

ADJUSTMENT

Shift the lever to N.

Remove:
– the style cover,
– the battery (A),
– the fuse box (B),
– the automatic gearbox computer,
– the battery tray (C),
– the wiring harness from the battery support.

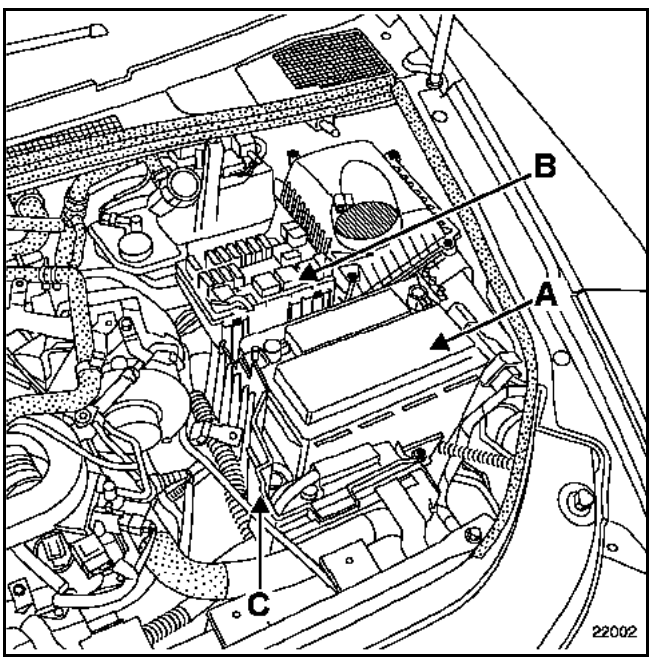

Remove the injection computer and its support.

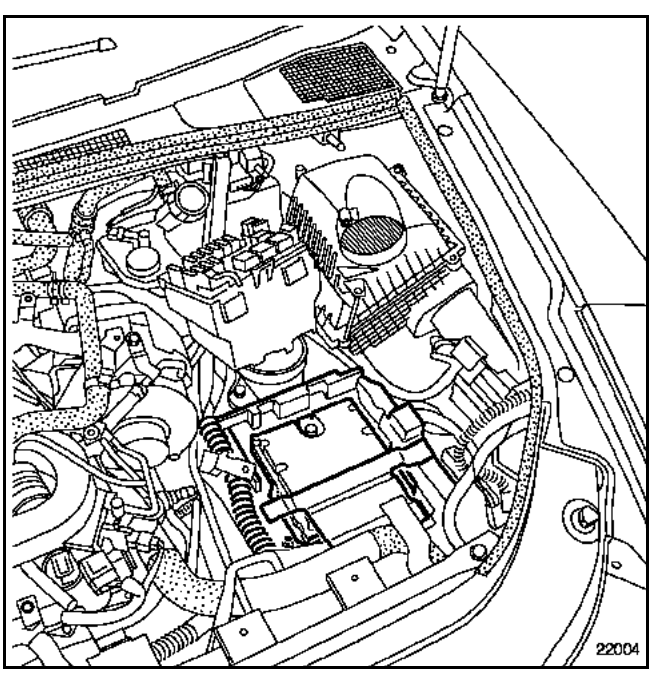

Remove:
– the control cable,

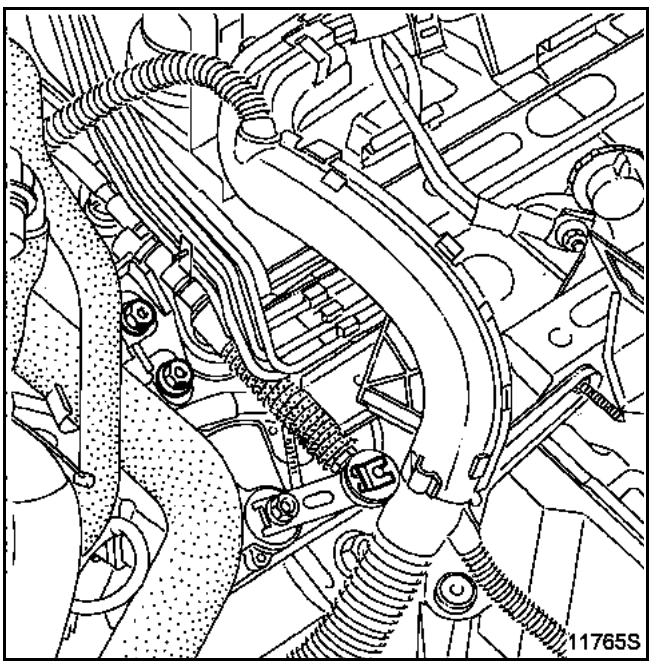

– the selector lever (D), holding it using a flat spanner at (E) on the selector shaft and slacken the nut (2).

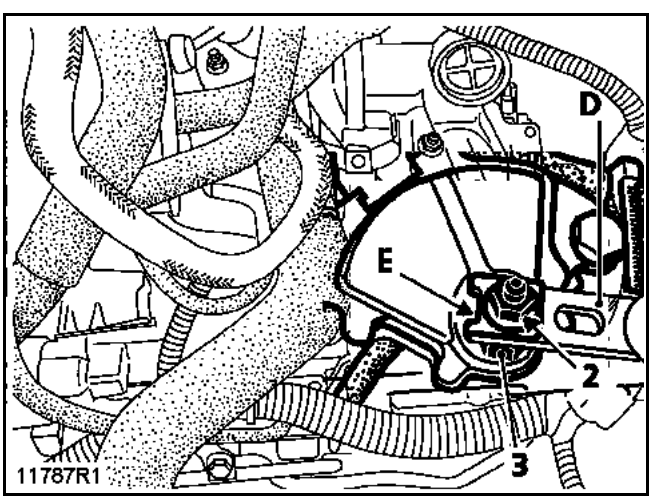

IMPORTANT: never slacken the selector lever bolt without holding it as this may damage the automatic gearbox.

GETtheMANUALS.org

Slacken both bolts (4).

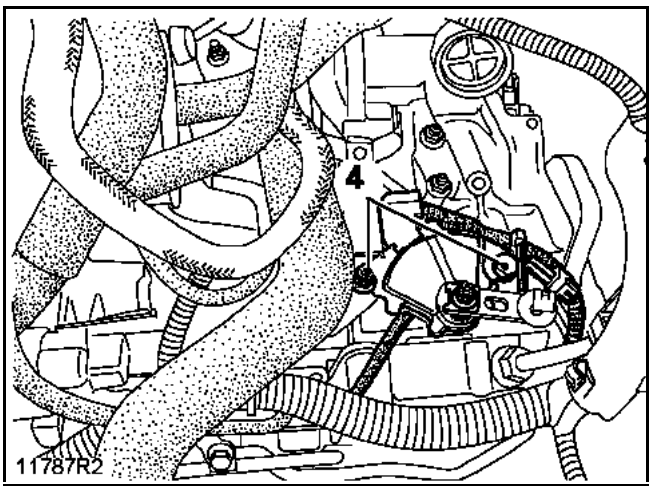

Check that the selector shaft is in position N and position tool **B. Vi. 1612** on the selector shaft.

Line up the mark (M) engraved on the multifunction switch with the slot (A) of the tool.

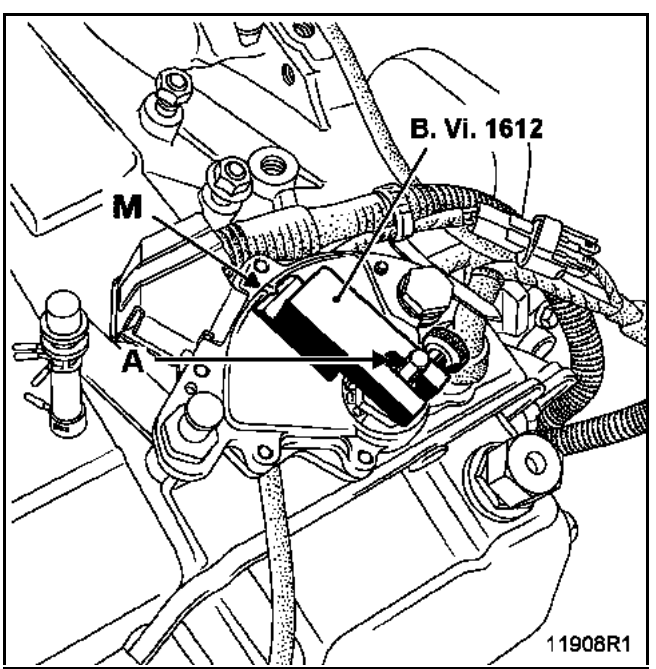

Tighten the two multifunction switch mounting bolts.

REFITTING

Refitting is the reverse of removal.

Ensure the wiring is correctly positioned when refitting.

Tighten the bolts to the correct torque.

Check that it works and that the gears can be changed correctly.

GETtheMANUALS.org

LOCATION

This is located between the battery and the left-hand headlight (A).

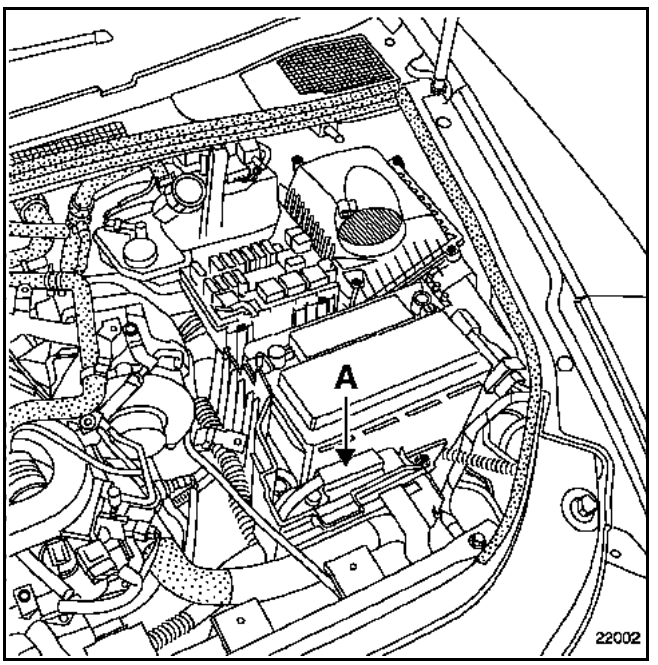

The cover must be removed from the battery to access the computer.

GETtheMANUALS.org

TIGHTENING TORQUE (in daNm)	
Input sensor mounting bolt	0.55

REMOVAL

Put the vehicle on a two-post lift.

Disconnect the battery.

Remove:
– the engine covers,
– the battery (A),
– the fuse box (B),
– the automatic gearbox computer,
– the battery tray (C),
– the wiring harness from the battery support.

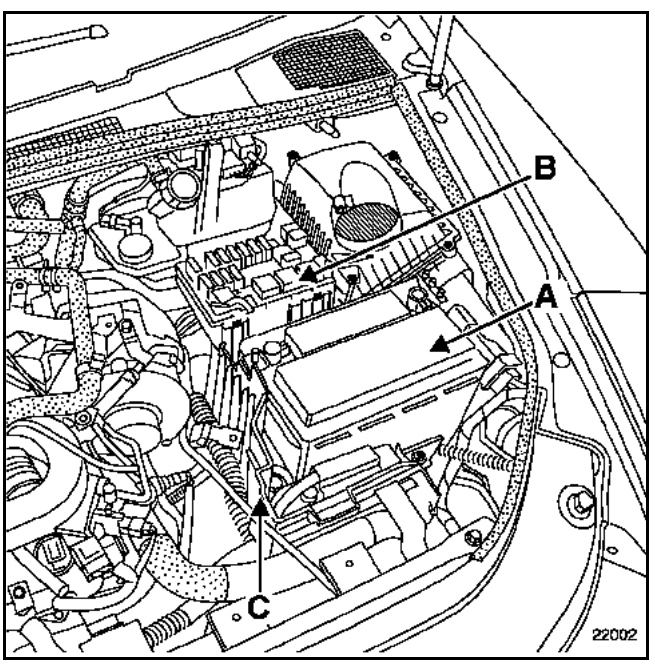

Remove the injection computer and its support.

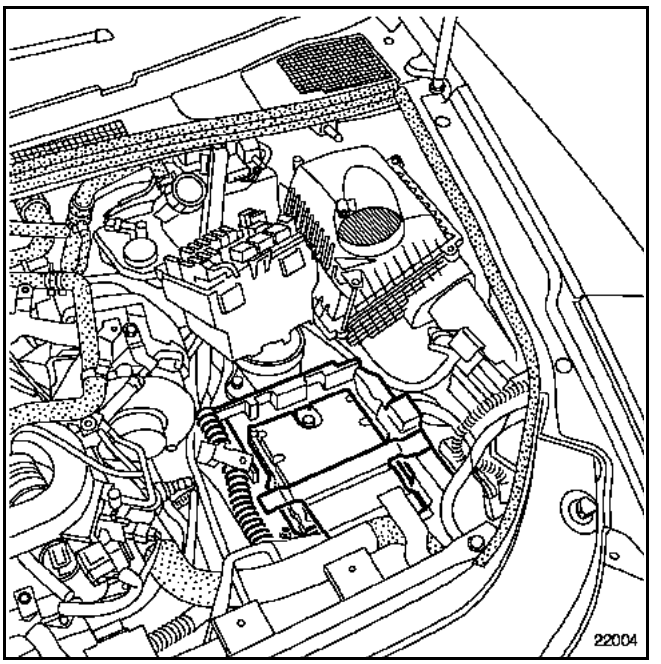

GETtheMANUALS.org

Clean the area around the sensor to prevent dirt from entering the automatic gearbox.

Loosen and remove the speed sensor (D).

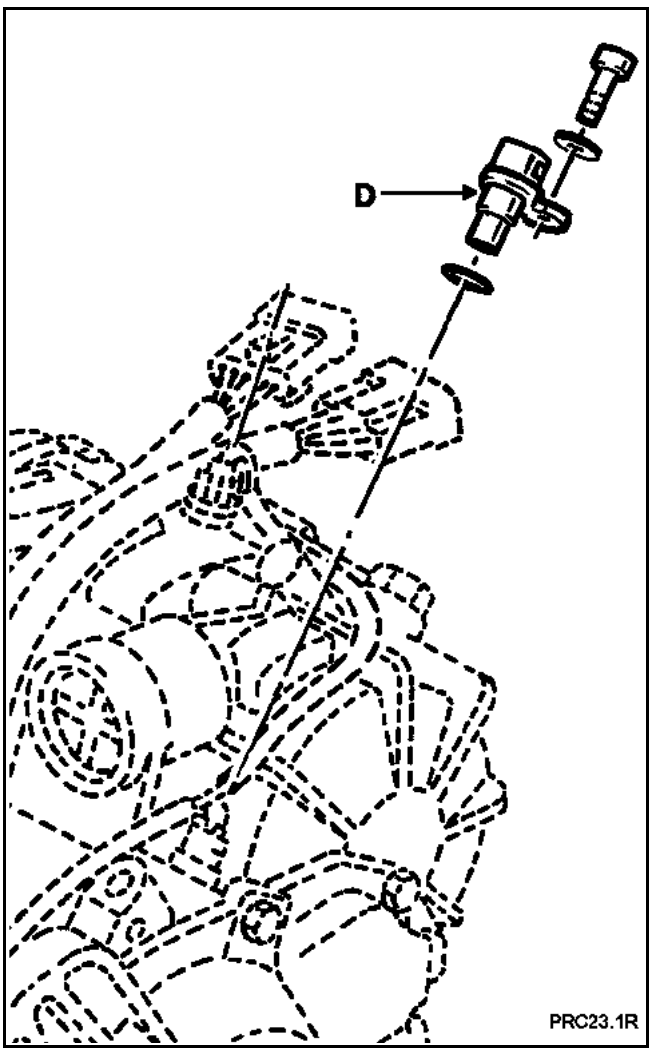

REFITTING

Oil the O-ring of the speed sensor.

Refitting is the reverse of removal.

TIGHTEN ALL THE BOLTS TO THE RECOMMENDED TORQUE.
Speed sensor: 0.5 daNm.

GETtheMANUALS.org

TIGHTENING TORQUE (in daNm)	
Speed sensor (output)	0.55

REMOVAL

Disconnect the battery.

Clean the area around the sensor to prevent dirt from entering the automatic gearbox.

Disconnect the sensor (A) and remove it.

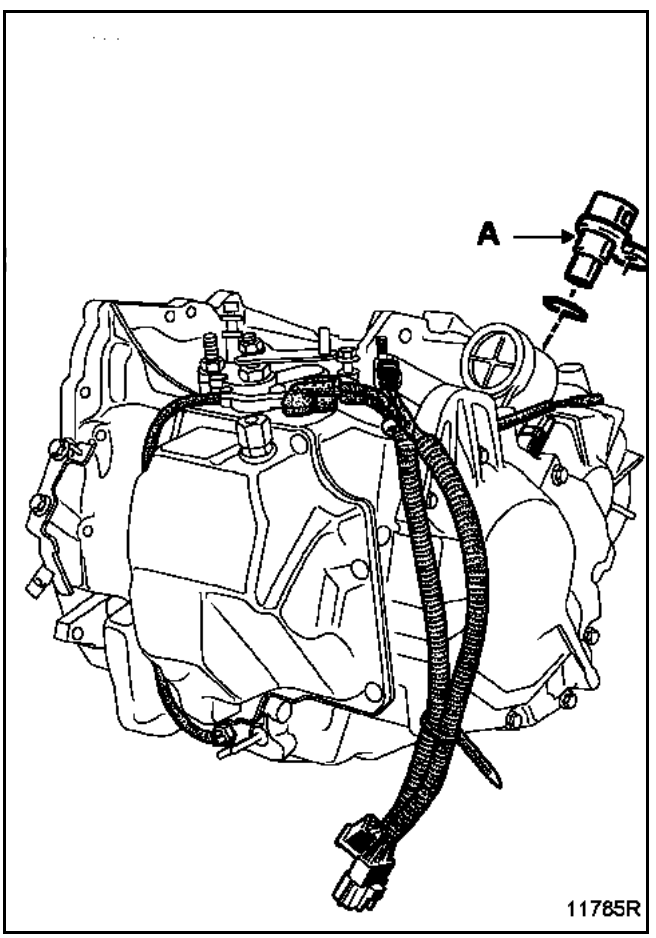

REFITTING

Oil the O-ring of the speed sensor.

Refitting is the reverse of removal.

Tighten the speed sensor to a torque of 0.5 daNm.

GETtheMANUALS.org

TIGHTENING TORQUE (in daNm)	
Cover mounting bolt	1.2

REMOVAL

Put the vehicle on a two-post lift.

Disconnect the battery.

Remove the engine undertray.

Drain the automatic gearbox (see the relevant section).

Remove:
– the battery;
– the fuse box,
– the automatic gearbox computer,
– the battery mounting.

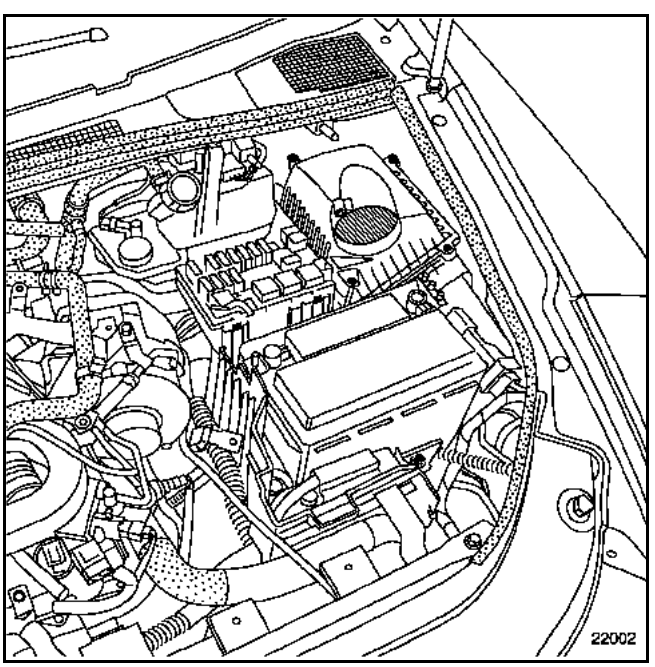

Remove the injection computer and its support.

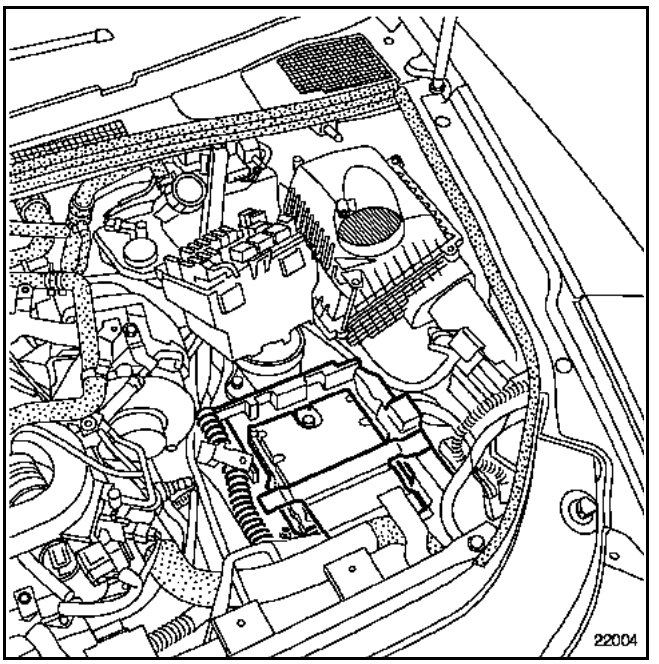

GETtheMANUALS.org

Disconnect the harness (1).

Remove:
– the wiring channel support (2) and release it,

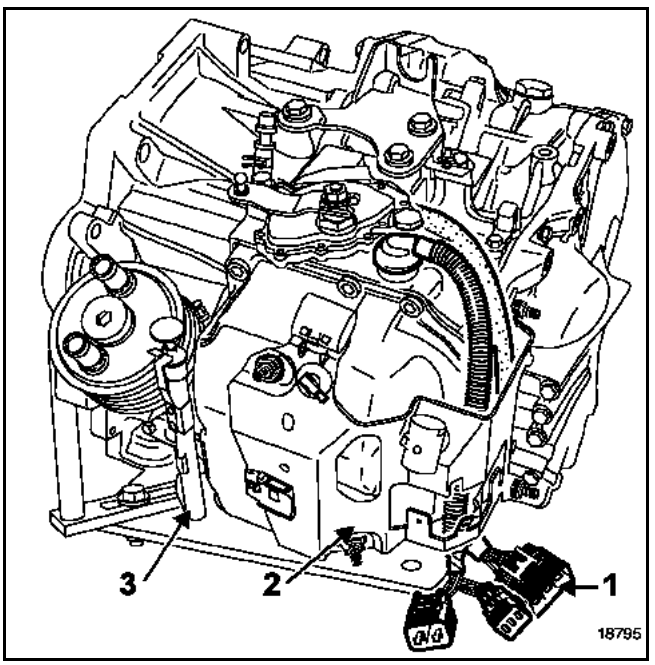

Place a clean container under the automatic gearbox to collect the oil.

Remove the housing (4) from the hydraulic distributor, by releasing it with a very thin blade (without damaging the contact surfaces).

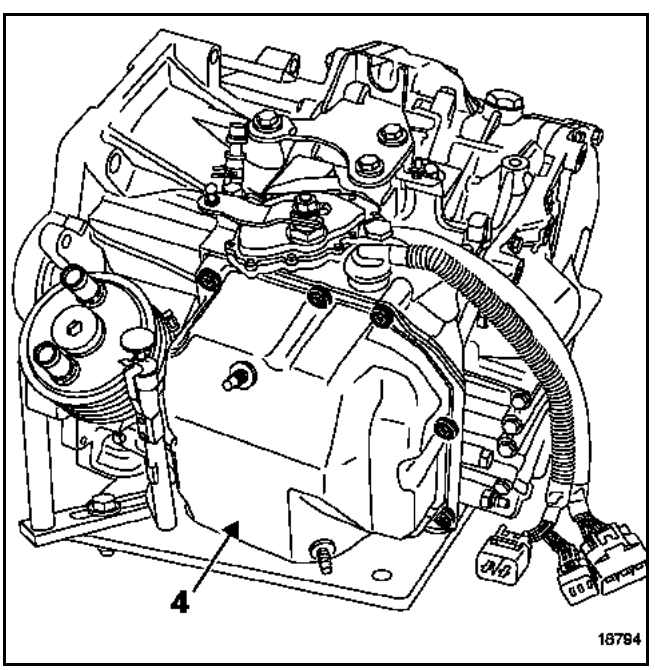

Disconnect and separate the transverse seal (A).

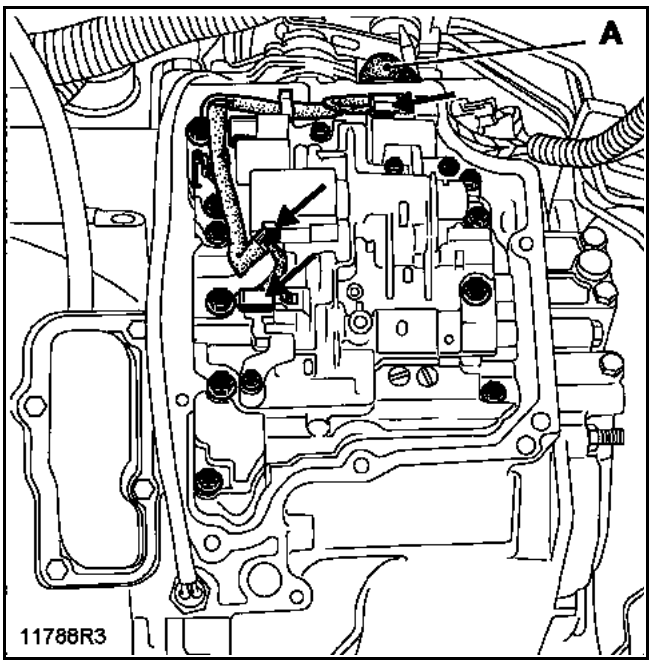

NOTE: be careful when routing the wiring as it must be replaced in the same position (the speed sensors do not have polarity reversal protection).

REFITTING

Refit in the reverse order to removal, following the instructions given in the various sections relating to this operation.

Fill with oil (see section **Filling - Levels**).

GETtheMANUALS.org

TIGHTENING TORQUES (in daNm)	
Housing mounting bolt	1.2
Distributor mounting bolt	1
Solenoid valve mounting bolt	1

REMOVAL

This operation is performed after having removed the distributor housing (see relevant section).

There is no specific procedure for removing the solenoid valves and it is the same for all:

S1 = sequence solenoid valve

S2 = sequence solenoid valve

S3 = converter lock-up solenoid valve.

Remove:
– the socket (D),
– the bolt (1),
and remove the solenoid valve.

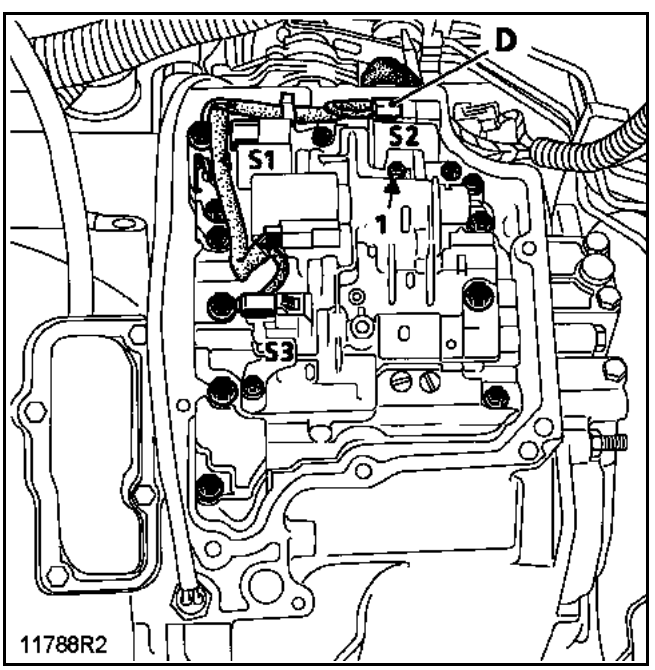

REFITTING

Refit in the reverse order to removal and tighten to the correct torque.

Check that the wiring is correctly inserted in the clips.

Special notes:

Put Vaseline on the solenoid valve seals for better positioning.

Fill the automatic gearbox with oil, following the instructions (see relevant section).

GETtheMANUALS.org

DRIVESHAFT PK GEARBOX

A Driveshaft right-hand side
B Driveshaft left-hand side

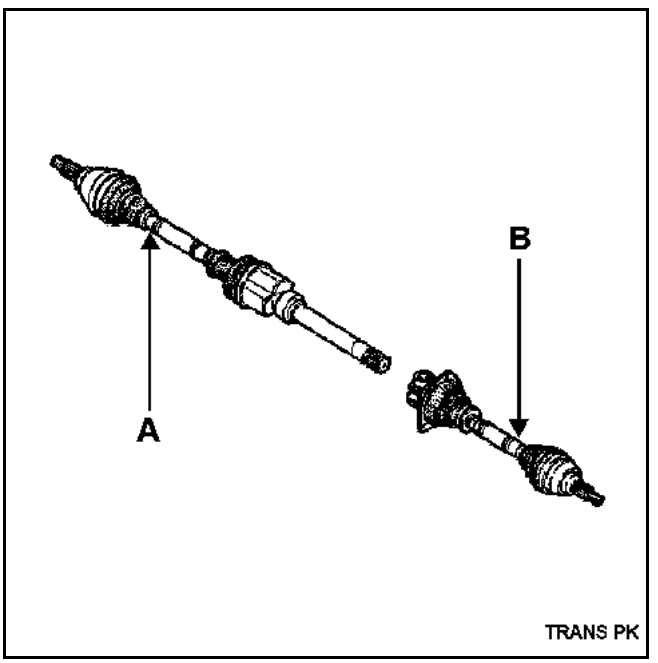

DRIVESHAFT SU1 GEARBOX

A Driveshaft right-hand side
B Driveshaft left-hand side

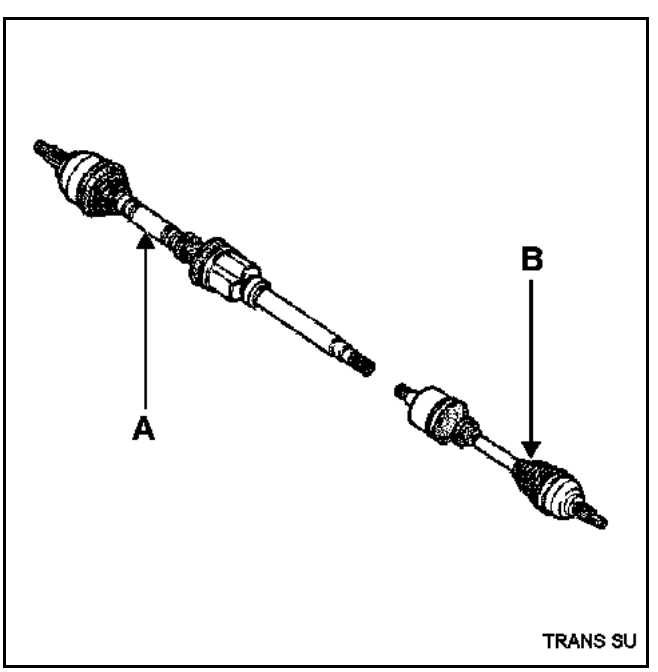

GETtheMANUALS.org

SPECIAL TOOLING REQUIRED	
T. A.v. 476	Ball joint extractor
Rou. 604-01	Hub locking tool

TIGHTENING TORQUES (in daNm)	
Shock absorber lower bolt	18
Track rod end nut	3.7
Wheel bolts	11
Mounting bolt on gearbox	3
Mounting bolt on intermediate bracket	3

REMOVAL

Wheel side

Put the vehicle on a two post lift.

Remove:
– the front wheels,
– the hub nut,

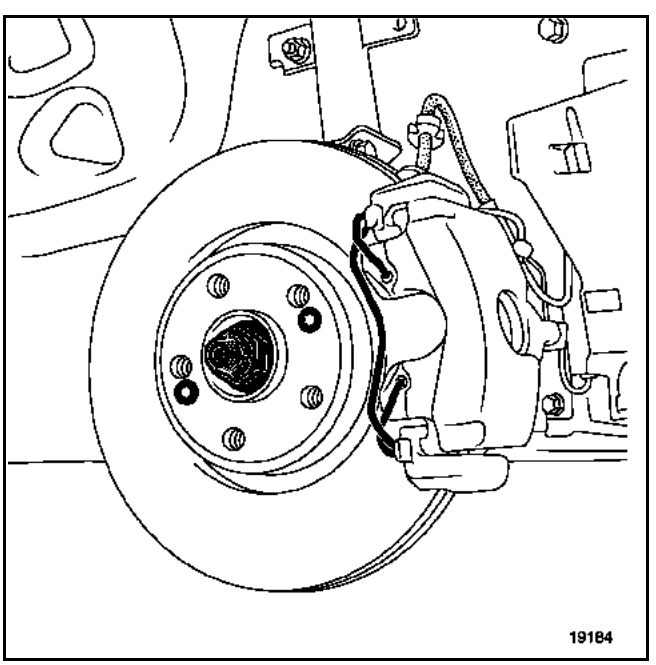

– the track rod end nut (A),
– the shock absorber lower mounting bolts (B).

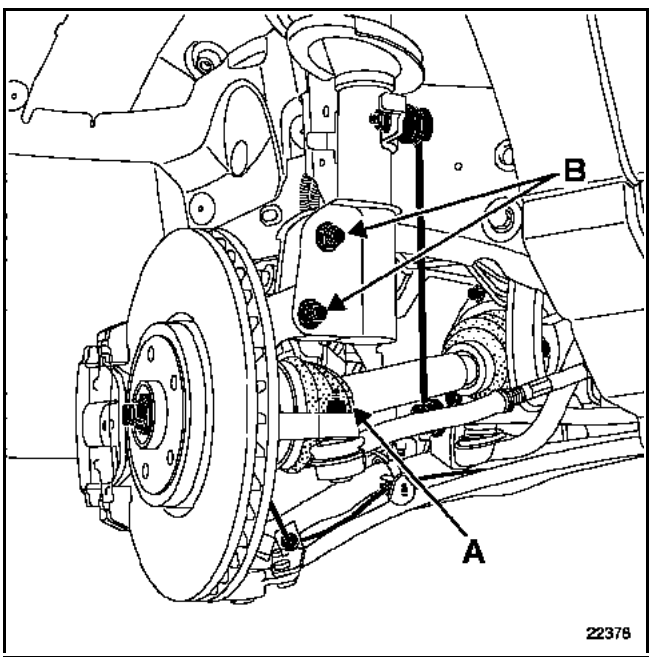

Push the driveshaft back into the stub-axle carrier, whilst tilting the stub axle carrier.

NOTE: mind the flexible brake hose.

Remove the driveshaft (wheel side).

Refit one of the shock absorber lower mounting bolts to avoid damaging the flexible brake hose.

GETtheMANUALS.org

REMOVAL

Right-hand side

Drain the gearbox.

Remove:
– the two intermediate bearing mounting bolts on the lower engine,

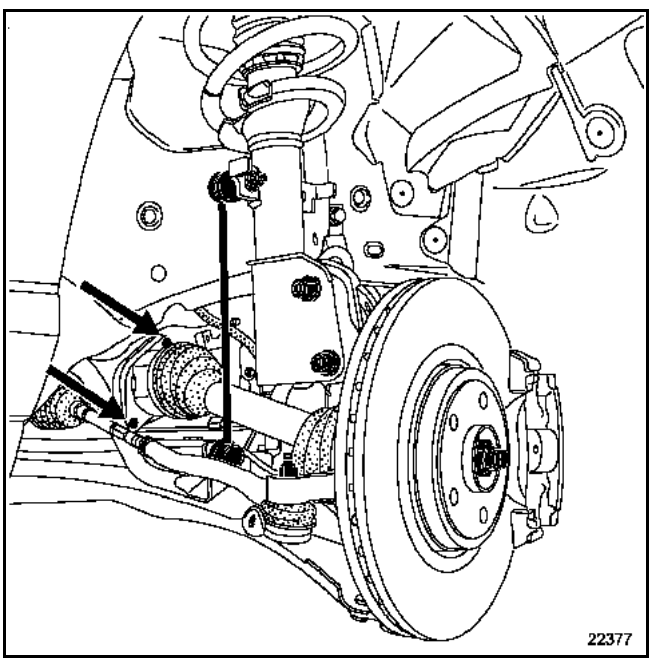

– the driveshaft on the gearbox side.

NOTE: if the bearing is jammed in the bearing relay, drive it out with a sledgehammer and automatically replace the bearing (see **Chapter 29A: Relay shaft bearing**).

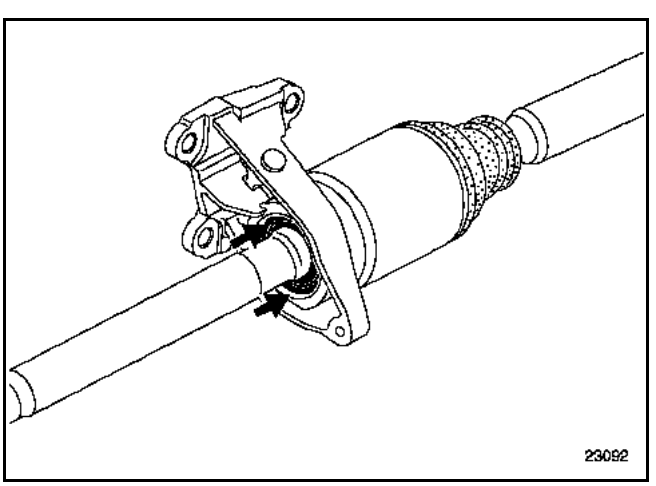

REFITTING

NOTE:
– Clean the bore of the bearing into which the bearing is inserted.
– Check the condition of the contact surface of the lip seal on the relay shaft.
– It is recommended that the differential output lip seal is automatically replaced (see corresponding section).

Proceed in the reverse order to removal.

Left-hand side

Drain the gearbox.

Remove:
– the three gaiter mounting bolts on the gearbox,

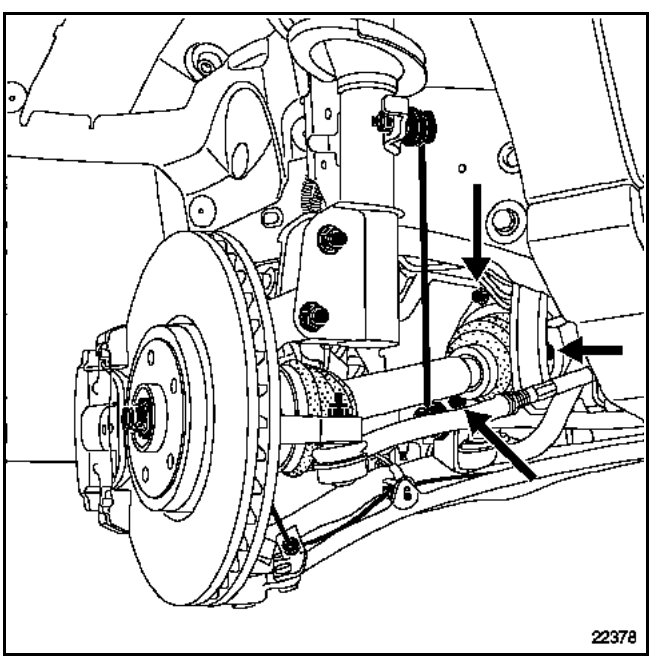

– the driveshaft on the gearbox side.

REFITTING

Proceed in the reverse order to removal.

GETtheMANUALS.org

SPECIAL TOOLING REQUIRED	
T. A.v. 476	Ball joint extractor
Rou. 604-01	Hub locking tool

TIGHTENING TORQUES (in daNm)	
Shock absorber lower bolt	18
Track rod end nut	3.7
Wheel bolts	11
Mounting bolt on intermediate bracket	3

REMOVAL

Wheel side

Put the vehicle on a two post lift.

Remove:
– the front wheels,
– the hub nut,

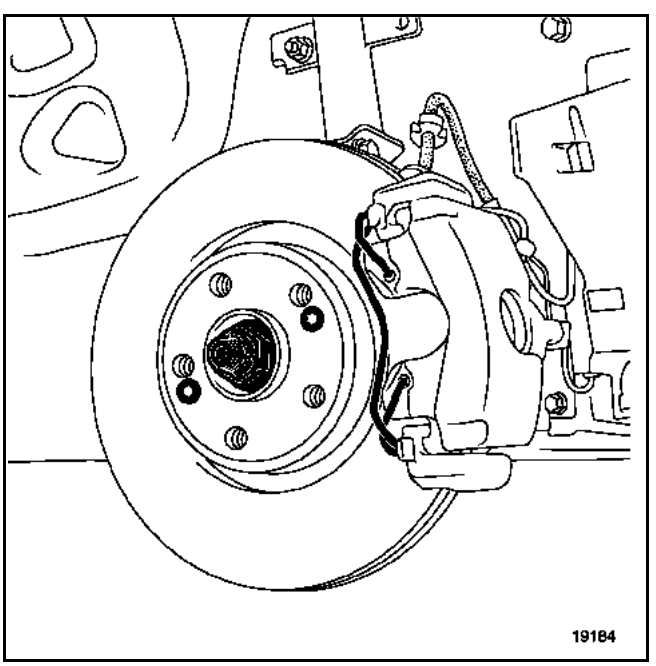

– the track rod end nut (A),
– the shock absorber lower mounting bolts (B).

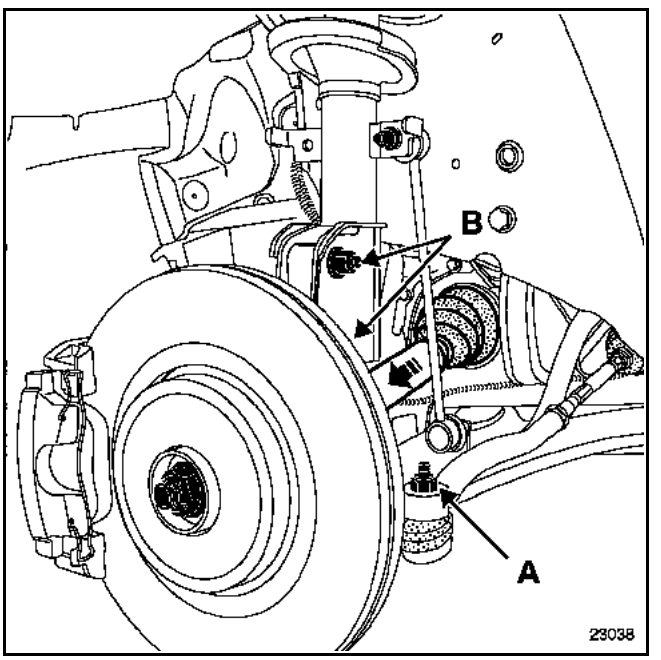

Push the driveshaft back into the stub-axle carrier, whilst tilting the stub-axle carrier.

NOTE: mind the flexible brake hose.

Remove the driveshaft (wheel side).

Refit one of the shock absorber lower mounting bolts to avoid damaging the flexible brake hose.

GETtheMANUALS.org

REMOVAL

Right-hand side

Remove:
– the two retaining plate mounting bolts on the intermediate bearing,

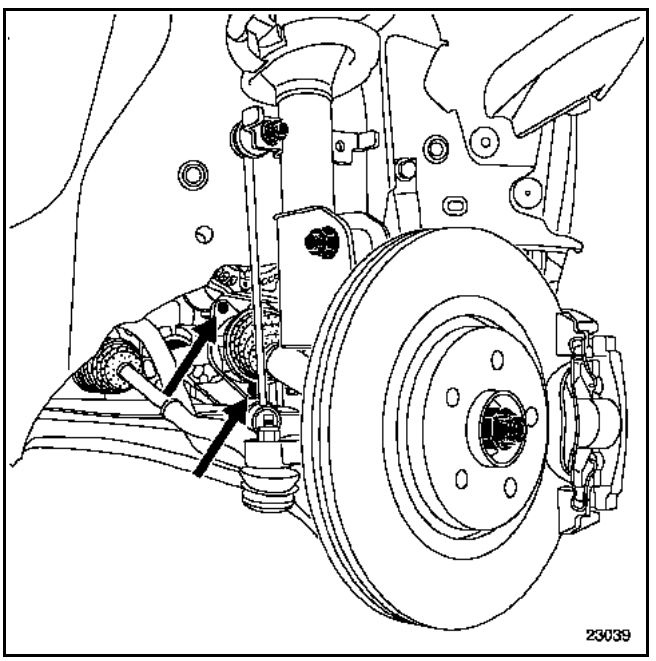

– the driveshaft on the gearbox side.

NOTE: if the bearing is jammed in the bearing relay, drive it out with a sledgehammer and automatically replace the bearing (see **Section 29A: Relay shaft bearing**).

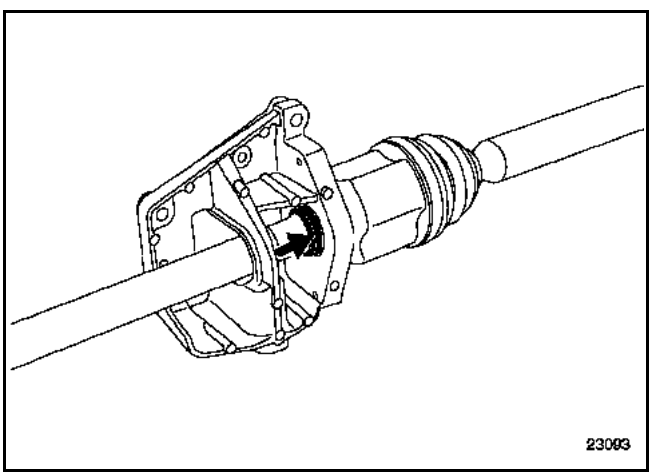

Above, intermediate bearing V4Y, intermediate bearing P9X is identical to the G9T and F4R.

REFITTING

NOTE:
– Clean the bore of the bearing into which the bearing is inserted.
– Check the condition of the contact surface of the lip seal on the relay shaft.
– It is recommended that the differential output lip seal is automatically replaced (see corresponding section).

Proceed in the reverse order to removal.

Left-hand side

Remove the driveshaft (gearbox side).

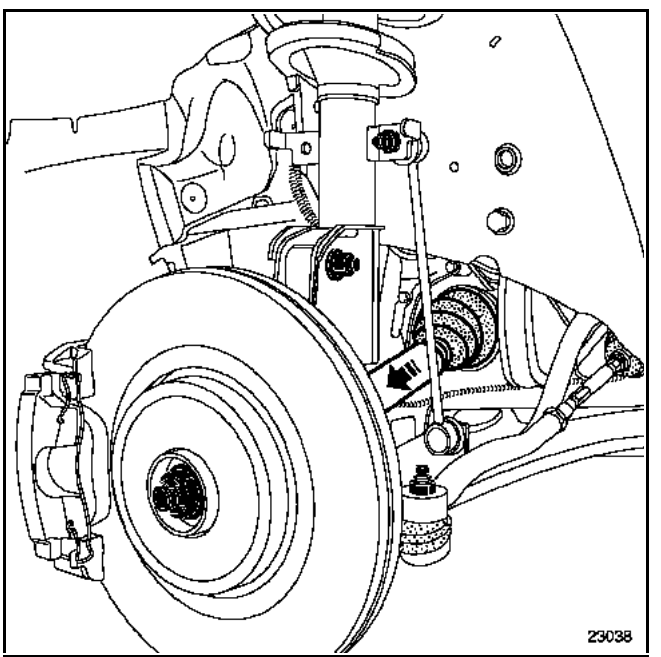

REFITTING

Proceed in the reverse order to removal.

GETtheMANUALS.org

RELAY SHAFT BEARING

REPLACEMENT

Remove the whole driveshaft.

Extract the bearing with a press using an extractor for support.

Take care not to scratch the contact surface of the lip seal on the relay shaft.

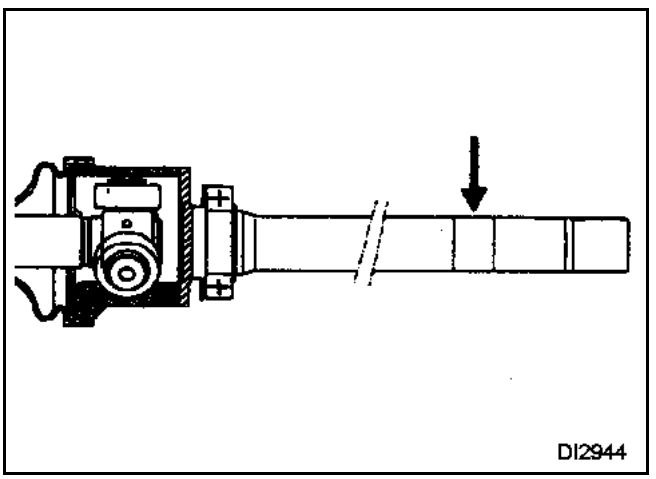

REFITTING

Lubricate the section of the shaft into which the bearing is inserted.

Engage the new bearing then position it fully in the shaft using a tube (see diagram below) so that it makes contact with the inner bearing ring.

Before refitting the driveshaft, clean and grease the bearing hole into which the bearing is inserted.

GETtheMANUALS.org

VEL SATIS

3 Chassis

30A GENERAL INFORMATION

31A FRONT AXLE MOUNTINGS

33A REAR AXLE MOUNTINGS

35A WHEELS AND TYRES

35B TYRE PRESSURE MONITOR

36A STEERING ASSEMBLY

36B POWER ASSISTED STEERING

37A MECHANICAL ELEMENT CONTROLS

37B AUTOMATIC PARKING BRAKE

38C ANTI-LOCK BRAKING SYSTEM

BJ0E - BJ0J - BJ0K - BJ0M - BJ0P - BJ0V

77 11 311 062 **Edition 2 - DECEMBER 2001** **EDITION ANGLAISE**

"The repair methods given by the manufacturer in this document are based on the technical specifications current when it was prepared.

The methods may be modified as a result of changes introduced by the manufacturer in the production of the various component units and accessories from which his vehicles are constructed.

All copyrights reserved by Renault.

Copying or translating, in part or in full, of this document or use of the service part reference numbering system is forbidden without the prior written authority of Renault.

© RENAULT 2001

GETtheMANUALS.org

Chassis

Contents

		Page
30A	**GENERAL INFORMATION**	
	General diagram of braking circuits	30A-1
	Brake circuit unions and pipes	30A-2
	Brake fluid	30A-3
	Composition and dimensions of braking components	30A-4
	Bleeding the brake circuit	30A-5
	Features of the anti-roll bars	30A-6
	Tightening torques	30A-7
	Underbody heights	30A-12
31A	**FRONT AXLE MOUNTINGS**	
	Brake pads	31A-1
	Brake calliper	31A-2
	Brake calliper mount	31A-4
	Brake disc	31A-5
	Stub-axle carrier	31A-6
	Spring and shock absorber assembly	31A-7
	Spring and shock absorber	31A-9
	Lower arm	31A-11
	Anti-roll bar	31A-13
	Sub-frame axle	31A-16
33A	**REAR AXLE MOUNTINGS**	
	Brake pads	33A-1
	Brake calliper	33A-3
	Brake calliper mount	33A-5
	Brake disc	33A-7
	Rear axle	33A-8
	Special tooling	33A-9
	Shock absorber	33A-10
	Stub-axle carrier	33A-11
	Vertical arm	33A-12
	Lower arm	33A-13
	Longitudinal arm	33A-14
	Longitudinal arm bearing	33A-16
	Anti-roll bar tie-rod	33A-17
	Anti-roll bar	33A-18
	Spring	33A-19
	Rear axle	33A-21
	Upper arm	33A-25
	Sub-frame	33A-27
35A	**WHEELS AND TYRES**	
	Specifications	35A-1
	Wheel balancing	35A-4
35B	**TYRE PRESSURE MONITOR**	
	General Information	35B-1
	Tyre pressure sensor	35B-3
	Radio frequency reception	35B-6
	Computer	35B-7
	Display	35B-8
	Programming	35B-10

GETtheMANUALS.org

Page

36A STEERING ASSEMBLY

Axial ball joint 36A-1

36B POWER ASSISTED STEERING

Steering rack 36B-1
Steering column 36B-5
Power assisted steering pump 36B-11
Pump pulley 36B-16
Pump hub 36B-17
Pump pulley 36B-18
Procedure without pressure switch 36B-19
Procedure with pressure switch 36B-20

37A MECHANICAL ELEMENT CONTROLS

Master cylinder 37A-1
Brake servo 37A-4
Air filter - Brake servo non-return valve 37A-7
Vacuum pump 37A-8
Brake hose 37A-9
Brake pedal position sensor 37A-10
Emergency brake assist 37A-11
Pedal assembly reduction gearing 37A-12
Exploded view of clutch master and slave cylinders 37A-16
Clutch master cylinder 37A-18
Clutch slave cylinder 37A-27
Clutch control pipes 37A-29

Right-hand drive - F4R engine
Master cylinder supply pipe 37A-31
Slave cylinder supply pipe 37A-35

Right-hand drive - G9T engine
Master cylinder supply pipe 37A-37
Slave cylinder supply pipe 37A-40
Clutch pedal 37A-43
Control unit 37A-49
External gear control 37A-57

Page

37B PARKING BRAKE

Introduction 37B-1
Emergency control handle 37B-4
Control unit 37B-5
Brake cables 37B-9
Handle 37B-13
Clutch pedal travel sensor 37B-14

38C ANTI-LOCK BRAKING SYSTEM

Specifications 38C-1
Regulation unit 38C-2
Hydraulic unit 38C-4
ABS computer 38C-6
Steering wheel angle sensor 38C-7
Yaw speed and transverse acceleration sensor 38C-10
Wheel speed sensors 38C-11
Pressure sensors 38C-13
Bleeding the brake circuit 38C-14

GETtheMANUALS.org

NOTE: the diagram below shows the general layout; in no case should it be taken as reference for the take-off points and allocation of circuits. When replacing one of the components of a vehicle's braking circuit, always mark the pipes before removing them so that they can be reconnected in their original positions.

"X"-SHAPED BRAKING CIRCUIT

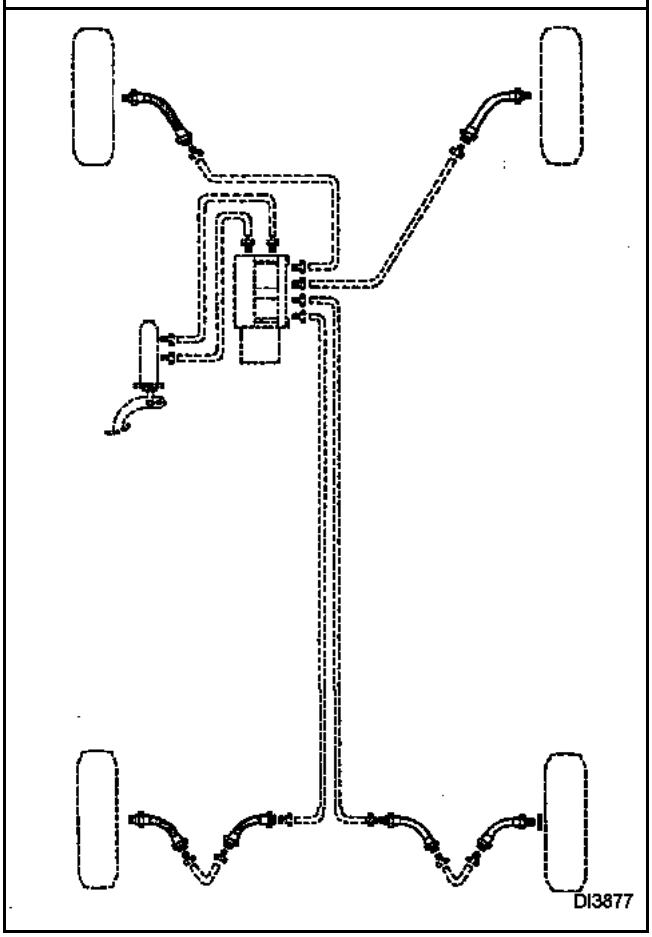

GETtheMANUALS.org

The pipes between the master cylinder, callipers and the hydraulic unit are connected using threaded unions with a METRIC THREAD.

Consequently, only parts specified in the Parts Catalogue for this vehicle should be used.

Parts identification:
- SHAPE of steel or copper PIPE end piece (A).
- SHAPE of the component CONNECTING POINTS (B).
- GREEN or BLACK coloured pipe UNIONS: hexagonal exterior, 6 x **11 mm** (C).

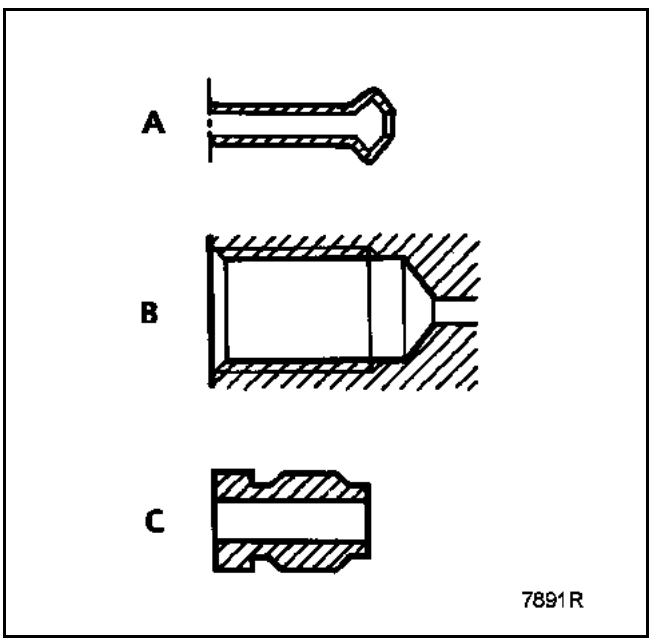

GETtheMANUALS.org

SPECIFICATIONS

Complies with **SAE J 1703-DOT4** standards (1).

BRAKE FLUID REPLACEMENT FREQUENCY

Our braking technology, in particular for our disc brakes (hollow pistons that transmit little heat, a low quantity of fluid in the cylinder, sliding callipers that remove the need for a fluid reserve in the least cooled area of the wheel), has enabled us to prevent the risk of vapour lock as far as possible, even in case of heavy braking (in mountainous areas). Current brake fluids do deteriorate slightly during the first few months of use, however, due to a slight take-up of moisture, so the fluid needs changing: see the vehicle's warranty and servicing booklet.

Topping up the level

Brake pad wear will cause a gradual drop in the brake fluid level in the reservoir. There is no point compensating for this drop, since the level will rise again when the pads are next changed. However, the level should not of course be allowed to fall below the minimum mark.

Approved brake fluids

Mixing two incompatible brake fluids in the braking circuit may can be a major risk of leaks, mainly due to deterioration of the cups. To prevent this risk, be sure to only use brake fluids that have been checked and approved by our laboratories and which comply with standard **SAE J 1703 DOT 4** (1).

(1) To get the best out of vehicles equipped with ESP, RENAULT recommends a brake fluid with low viscosity when cold (**maximum 750 mm^2/s at - 40°C**).

GETtheMANUALS.org

FRONT BRAKES (mm)	
Piston diameter	**60**
Disc diameter	**324**
Disc thickness	**28**
Minimum disc thickness*	**25.4**
Maximum disc run-out	**0.2**
Brake pad thickness (including support)	**17.5**
Minimum brake pad thickness (including support)	**8**
REAR BRAKES (mm)	
Piston diameter	**38**
Disc diameter	**300**
Disc thickness	**11**
Minimum disc thickness*	**9.5**
Maximum disc run-out	**0.2**
Brake pad thickness (including support)	**16.6**
Minimum brake pad thickness (including support)	**8**
MASTER CYLINDER (mm)	
Diameter	**25.4**

(*) Brake discs cannot be reground. If they are excessively worn or scored they must be replaced.

GETtheMANUALS.org

SPECIAL TOOLING REQUIRED
Braking circuit bleeding device (approved by Renault) Fault finding tool

To work properly a braking circuit must be free of gas (external air in circuit, steam, etc.). Whenever the circuit has been opened, therefore, the air contained in the circuit must be bled out when the circuit is closed.

As the brake fluid ages (see servicing frequency) it absorbs a significant amount of moisture which may create steam in the circuit, under certain extreme conditions. This ageing process means that the circuit must be drained completely and then the air contained in it must be bled out.

Prerequisites for any braking circuit air bleeding:
– check the circuit sealing,
– fill the brake fluid reservoir (1) to its maximum level,
– depress the brake pedal several times to bring the moving parts of the braking system into contact (pistons, brake shoes, discs),
– add brake fluid (1) to top up the level in the reservoir,
– set up the bleeding device and top up the brake fluid level (1) to maximum (consult the driver's handbook, the recommended pressure setting being between **2 bar** and **2.5 bar**).

There are two distinct types of braking circuit air bleed:
– a "conventional" air bleed; this does not bleed air from the hydraulic unit regulation circuit (2),
– a hydraulic unit regulation circuit air bleed (2); this bleed should only be carried out if the brake pedal travel is deemed correct after a "conventional" bleed (3), then becomes incorrect.

The two air bleed procedures can be looked up in **section 38C**.

(1) Brake fluid **SAE J 1703 DOT4**
To get the best out of vehicles equipped with ESP, Renault recommends a brake fluid with low viscosity when cold (maximum **750 mm^2/s at - 40°C**).
(2) The regulation circuit is an internal part of the hydraulic unit. It is isolated from the conventional circuit until the solenoid valves are activated by the computer or the fault finding tool.
(3) Confirmed by a road test with the hydraulic unit regulation activated.

GETtheMANUALS.org

FRONT AXLE

Bar diameter (mm)	Marking colour
23.5	No marking

REAR AXLE

Bar diameter (mm)	Marking colour
21	ORANGE
22	PURPLE

GETtheMANUALS.org

FRONT AXLE

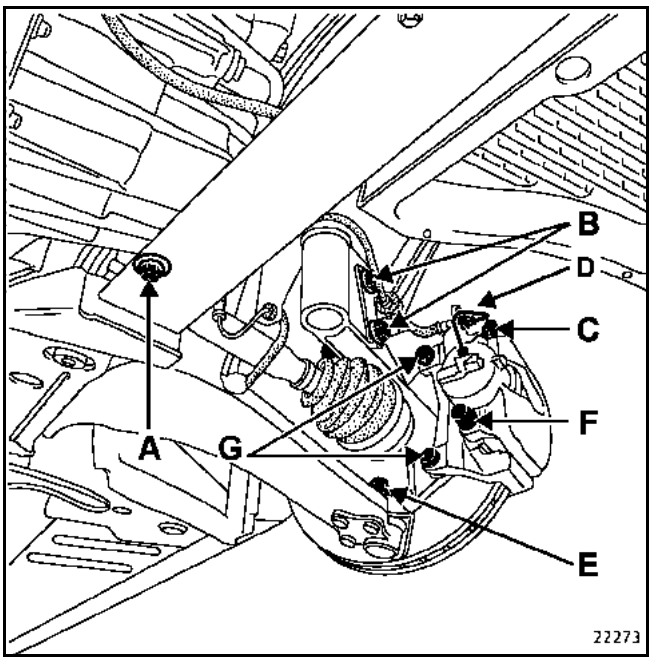

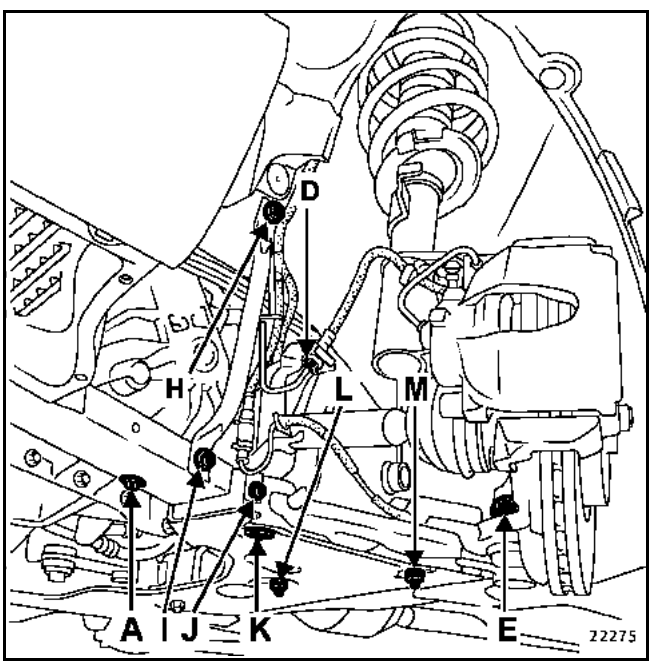

	TIGHTENING TORQUES (in daNm)	
A	Side member mounting bolt	2.1
B	Spring and shock absorber assembly lower mounting bolt	18
C	Bleed screw	0.8
D	Brakes hydraulic union	1.4
E	Lower ball joint mounting nut	11
F	Brake calliper (guide pin) bolt	2.8
G	Calliper support mounting bolts	10.5
H	Side member reinforcement upper mounting bolt	4.4
I	Side member reinforcement lower mounting bolt	4.4
J	Guide mounting bolt	2.1
K	Lower arm front mounting bolt	18
L	Steering rack mounting bolt	18
M	Lower arm rear mounting bolt	18

GETtheMANUALS.org

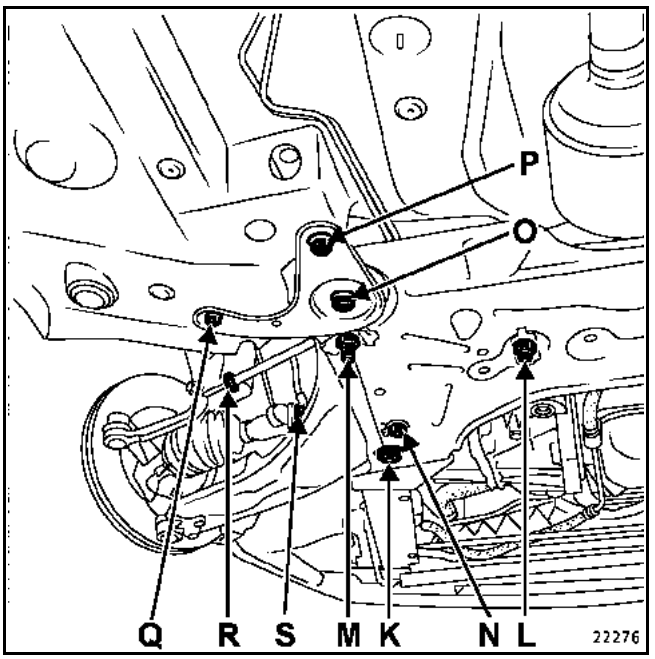

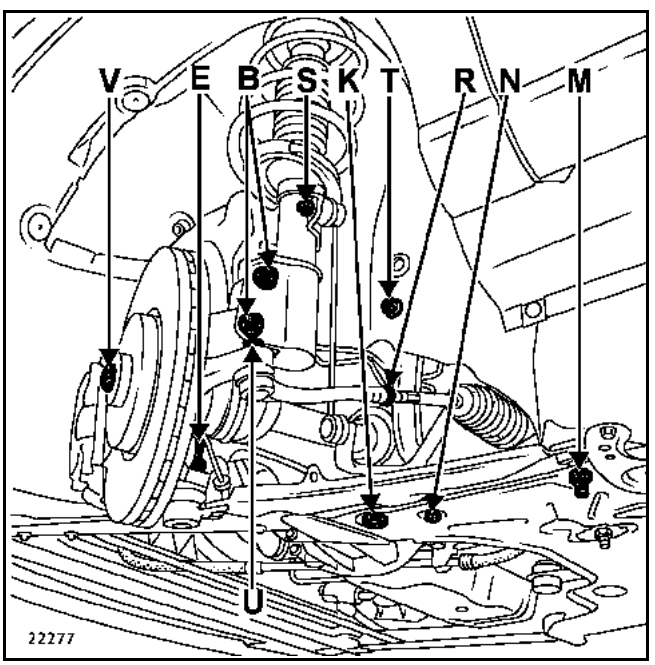

TIGHTENING TORQUES (in daNm)		
B	Spring and shock absorber assembly lower mounting bolt	18
E	Lower ball joint mounting nut	11

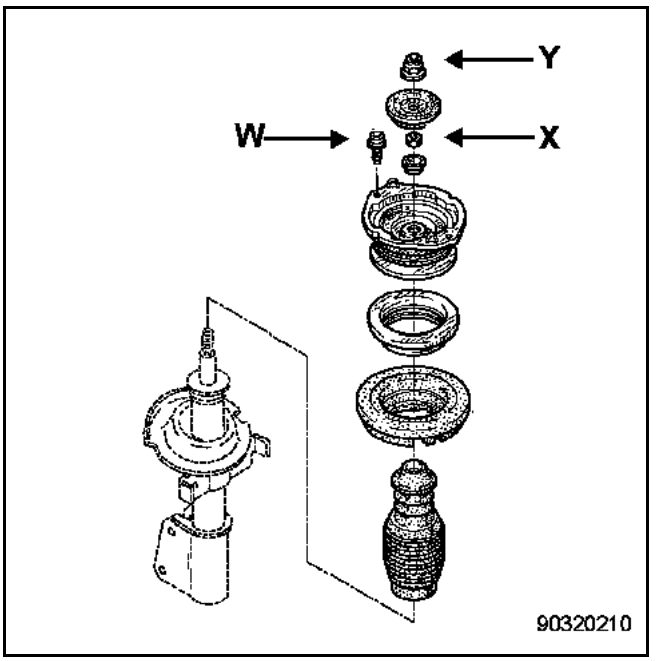

TIGHTENING TORQUES (in daNm)		
K	Lower arm front mounting bolt	18
L	Steering rack mounting bolt	18
M	Lower arm rear mounting bolt	18
N	Front tie-rod lower mounting bolt	10.5
O	Sub-frame rear mounting bolt	10.5
P	Rear tie-rod rear mounting bolt	10.5
Q	Rear tie-rod outer mounting bolt	2.1
R	Axial ball joint lock nut	6.2
S	Anti-roll bar tie rod nut	4.4
T	Front tie-rod upper mounting bolt	6.2
U	Track rod end nut	3.7
V	Stub-axle nut	28
W	Filtration unit mounting bolt	2.1
X	Shock absorber mounting nut	2.1
Y	Rebound stop mounting nut	6.2
	Anti-roll bar bearing mounting bolts	2.1

GETtheMANUALS.org

REAR AXLE

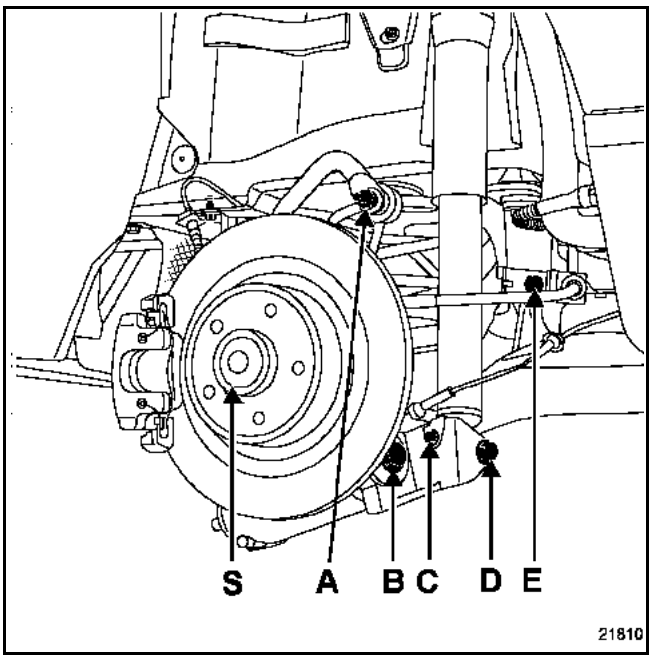

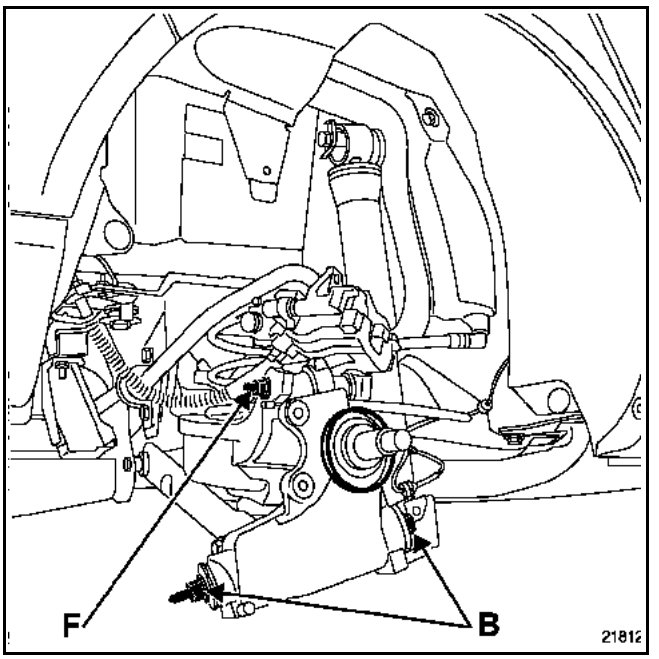

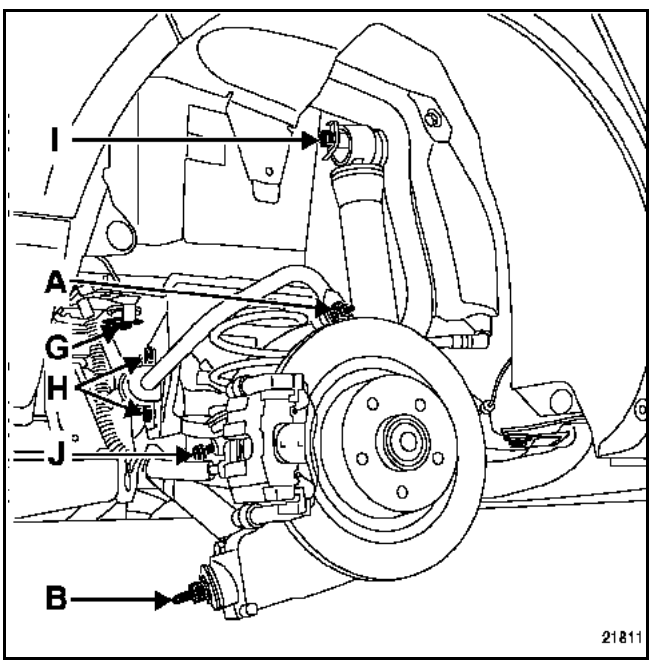

TIGHTENING TORQUES (in daNm)		
A	Anti-roll bar tie rod upper mounting nut	6.2
B	Stub axle carrier lower mounting bolt	23
C	Speed sensor wiring harness guide mounting bolt	0.8
D	Shock absorber lower mounting bolt	10.5
E	Parking brake cable guide mounting bolt	0.8
F	Stub axle carrier upper mounting bolt	10.5
G	Sub-frame mounting bolt	6.2
H	Anti-roll bar bearing mounting bolts	6.2
I	Shock absorber upper mounting bolt	10.5
J	Calliper bleed screw	0.8
S	Stub-axle nut	28

GETtheMANUALS.org

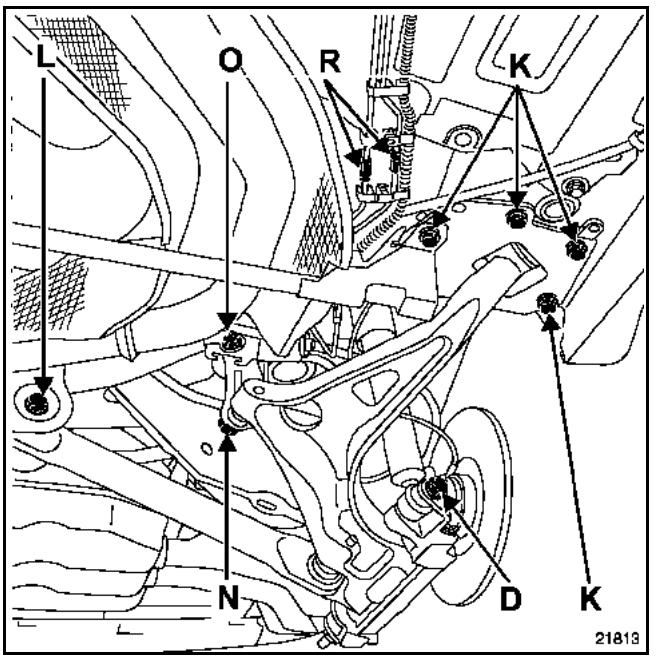

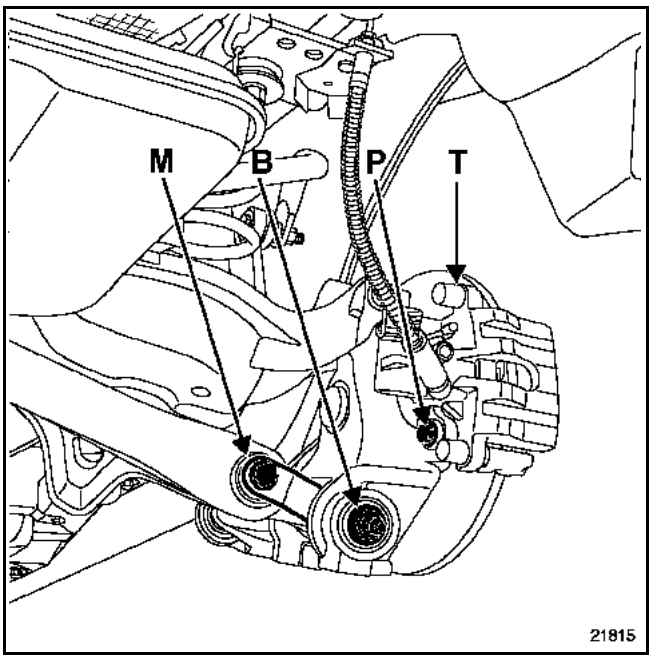

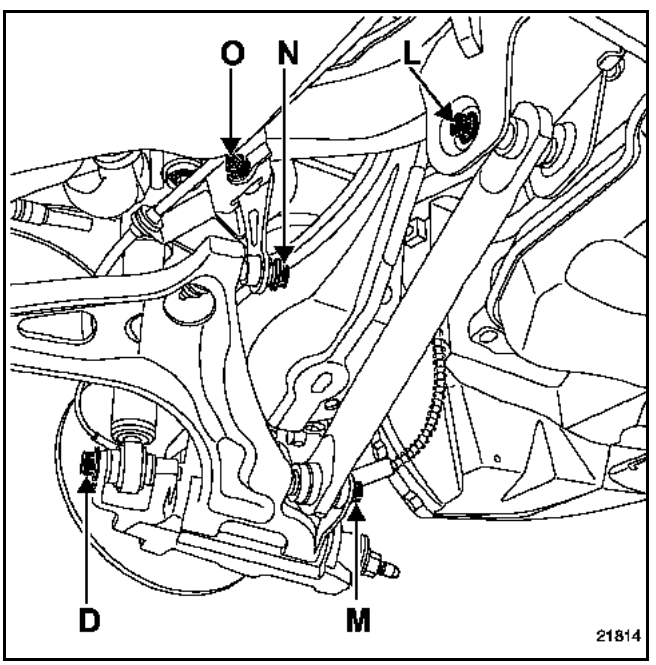

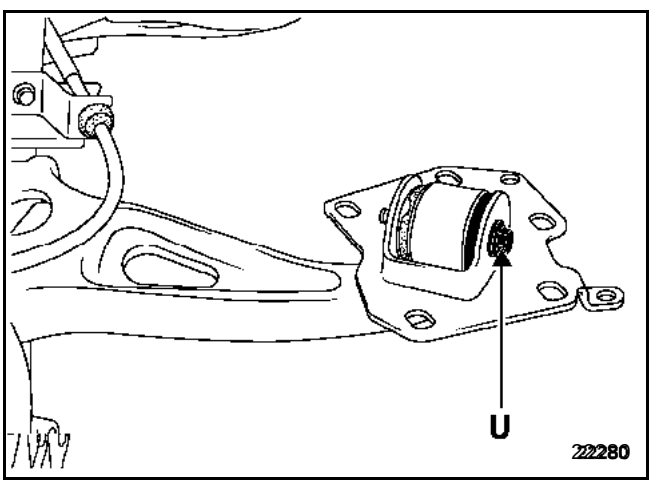

TIGHTENING TORQUES (in daNm)		
B	Stub axle carrier lower mounting bolt	28
D	Shock absorber lower mounting bolt	10.5
K	Longitudinal arm bearing mounting bolts	6.2
L	Lower arm upper mounting bolt	10.5

TIGHTENING TORQUES (in daNm)		
M	Lower arm lower mounting bolt	10.5
N	Vertical arm lower mounting bolt	10.5
O	Vertical arm upper mounting bolt	6.2
P	Calliper support mounting bolt	10.5
R	Brakes hydraulic union	1.4
T	Calliper mounting bolt (guide pin)	2.8
U	Lower arm - bearing mounting bolt	10.5

GETtheMANUALS.org

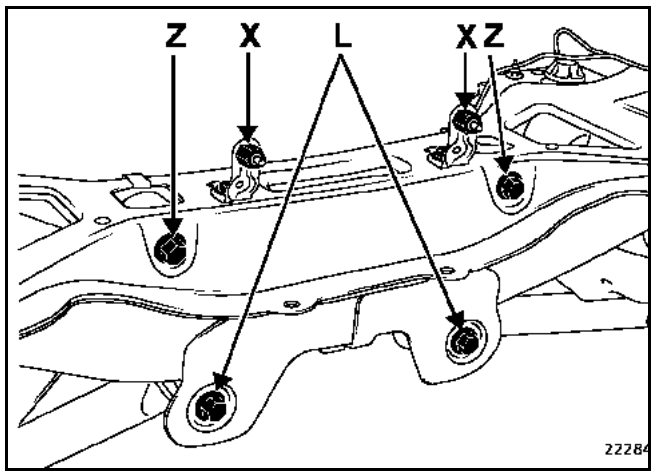

TIGHTENING TORQUES (in daNm)		
L	Lower arm upper mounting bolt	10.5
X	Filtration element mounting nut	0.8
Z	Upper arm mounting bolt	10.5

STEERING COLUMN

TIGHTENING TORQUES (in daNm)	
Steering wheel mounting bolt	4.4
Column upper mounting bolt	2.1
Steering column universal joint bolt	2.1

HYDRAULIC BRAKE CONTROL

TIGHTENING TORQUES (in daNm)	
Brake servo mounting nuts	2.1
Master cylinder mounting nuts	2.5
Master cylinder outlet pipes	1.4
Hydraulic unit mounting bolts	0.9
Hydraulic unit piping union	1.4

AUTOMATIC PARKING BRAKE CONTROL

TIGHTENING TORQUE (in daNm)	
Control unit mounting nuts	0.9

GETtheMANUALS.org

Measuring points

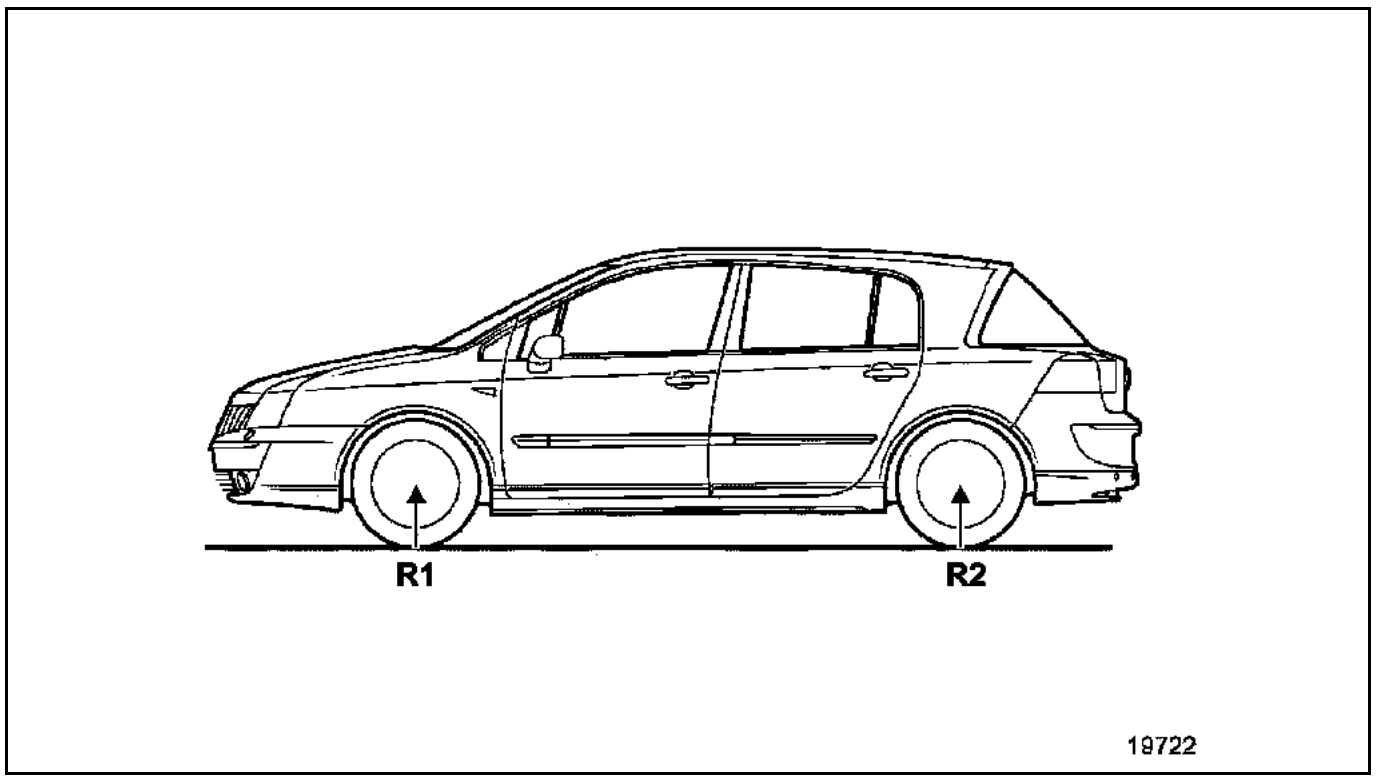

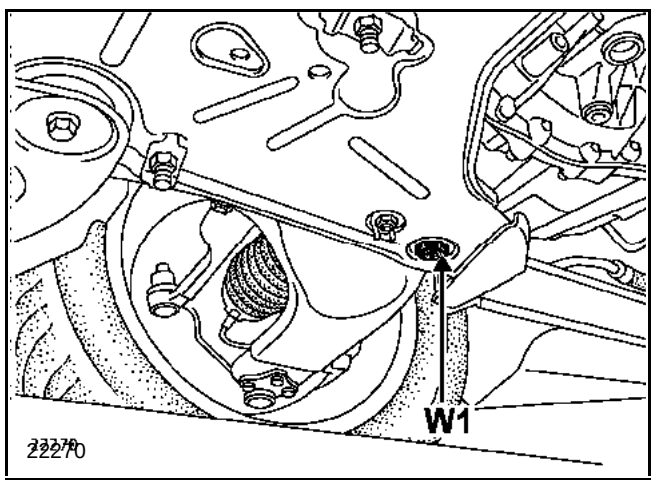

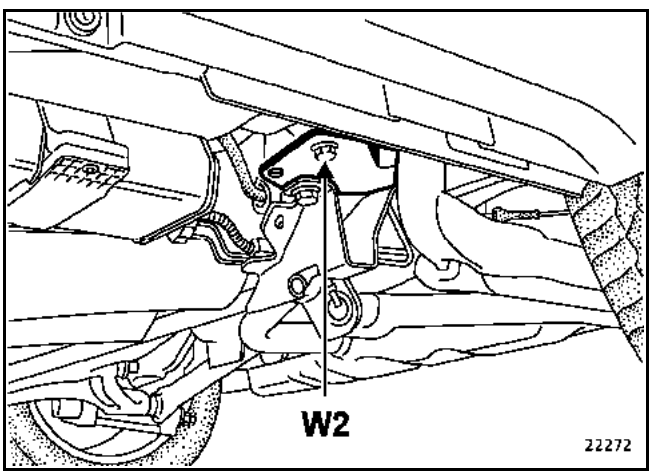

R1 and **R2** are taken between the ground and the wheel axes.
W1 is taken between the ground and the lower face of the lower arm front mounting nut.
W2 is taken between the ground and the longitudinal arm bearing bolt head furthest from the wheel.

GETtheMANUALS.org

SPECIAL TOOLING REQUIRED	
Rear brake calliper piston return tool - BREMBO type1190-01	**Brake calliper piston return tool**

TIGHTENING TORQUES (in daNm)	
Mounting bolt	**2.8**
Wheel bolt	
∅ 12	**11**
∅ 14	**13**

Put the vehicle on a two post lift.
Remove the front wheels.

REMOVAL

Remove:
– the spring on the front face of the calliper,
– the flexible brake pipe from the shock absorber,

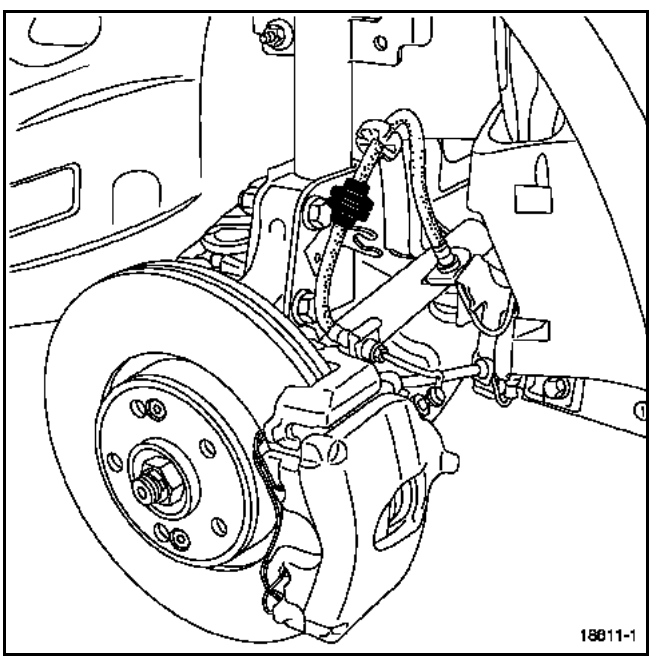

– the two plugs at the end of the pillars,
– both pillar bolts.

Hang up the calliper. Remove the pads.

REFITTING

IMPORTANT: Make sure the flexible brake pipe and wheel speed sensor wiring are properly mounted, if they have been unfastened.

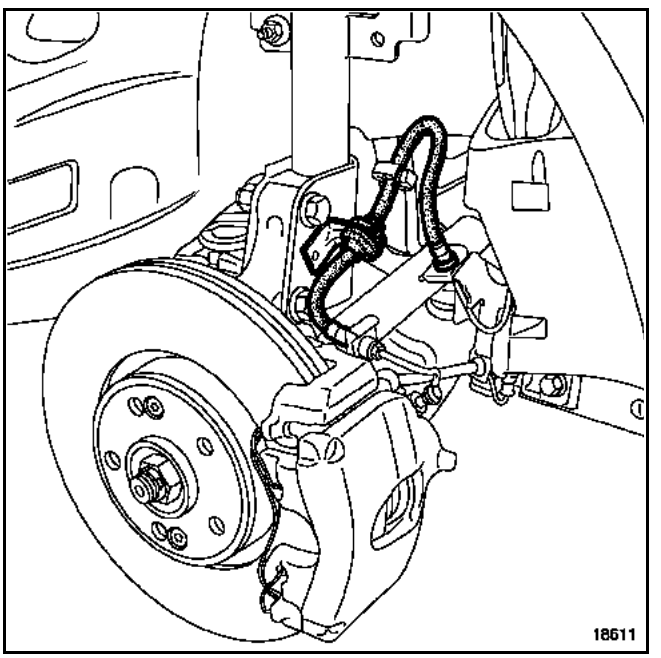

Check the condition of the braking components.

Push the piston back using tool **Fre. 1190-01** until it is at the bottom of its bore.

Fit the new trim pieces, beginning with the internal trim.

Refit:
– the bottom pillar bolt,
– the top pillar bolt,
– the spring on the front face of the calliper, starting from the bottom.

IMPORTANT: Press the brake pedal several times to bring the pistons into contact with the brake pads and discs.

GETtheMANUALS.org

SPECIAL TOOLING	
Rear brake calliper piston return tool - BREMBO type1190-01	**Rear brake calliper piston return tool**

TIGHTENING TORQUES (in daNm)	
Wheel bolt	
∅ 12	**11**
∅ 14	**13**
Brake calliper mounting bolt (pillars)	**2.8**
Flexible brake pipe	**1.4**

REMOVAL

Put the vehicle on a two post lift.

Fit a pedal press to limit brake fluid running out.

Remove the front wheels.

Remove:
– the spring on the front face of the calliper,
– the hose mounting bracket on the calliper,
– the calliper flexible brake pipe,
– the two plugs at the end of the pillars,
– the two pillar bolts (for calliper mounting),
– the calliper,
– the pads.

Check condition of flexible brake pipe. Replace if necessary. The flexible brake pipe must also be replaced when the calliper is replaced.

Check condition of brake pads, disc, piston dust seals, and guide dust seals.

REMINDER: when replacing brake pads or discs, the brake pads and disc on the opposite side must be changed.

Clean the calliper mountings and callipers.

REFITTING

Push the piston back using tool **Fre. 1190-01** until it is at the bottom of its bore.

Refit:
– the brake pads,
– the calliper,
– the pillar bolts.

GETtheMANUALS.org

Tighten to the recommended torque.

Refit the flexible brake pipe. Tighten to the recommended torque.

IMPORTANT: Press the brake pedal several times to bring the pistons into contact with the brake pads and discs.

Perform a partial circuit bleed of the brakes, if the compensation reservoir has not been drained completely during the operation. Otherwise perform a complete bleeding operation (see **bleeding method**).

Refit the wheels.

Tighten the wheel bolts to the recommended torque.

REPAIR

Any scoring of the calliper bore systematically requires the replacement of the complete calliper.

Remove the rubber dust seal.

Remove the pistons using compressed air, taking care to insert a wooden block between the calliper and the pistons to prevent damage to the pistons. Any trace of impact on the end panel will render the piston unfit for use.

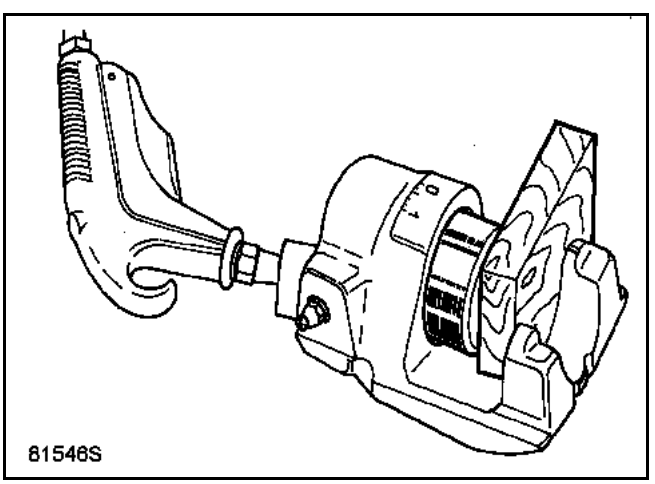

Using a flexible strip with a rounded edge (such as a feeler gauge), remove the rectangular section seal from the calliper groove.

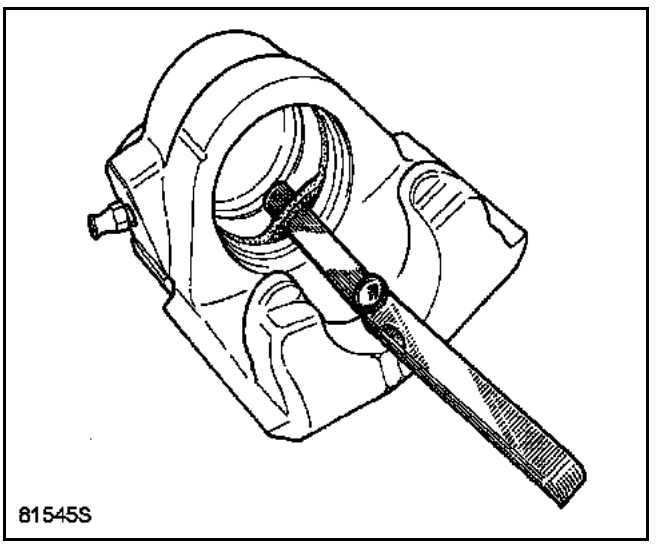

GETtheMANUALS.org

SPECIAL TOOLING	
Rear brake caliper piston return tool - BREMBO type1190-01	**Tool for pushing calliper pistons back**

TIGHTENING TORQUES (in daNm)	
Wheel bolt	
∅ 12	**11**
∅ 14	**13**
Calliper support mounting bolt	**10.5**
Flexible brake pipe	**1.4**

REMOVAL

Put the vehicle on a two post lift.

Fit a pedal press to limit brake fluid running out.

Remove the front wheels.

Remove:
– the calliper bracket mounting bolts,
– the brake pads,
– the calliper mounting.

Check condition of flexible brake pipe. Replace if necessary. The flexible brake pipe must also be replaced whenever the calliper is replaced.

Check condition of brake pads, disc, piston dust seals, and guide dust seals.

REMINDER: when replacing brake pads or discs, the brake pads and disc on the opposite side must be changed.

Clean the calliper mountings and callipers.

REFITTING

Push the piston back using tool **Fre. 1190-01** until it is at the bottom of its bore.

Refit:
– the calliper mounting,
– the calliper support mounting bolts.

Tighten to the recommended torque.

Refit:
– the brake pads,
– the calliper,
– the calliper mounting bolts.

Tighten to the recommended torque.

IMPORTANT: Press the brake pedal several times to bring the pistons into contact with the brake pads and discs.

Perform a partial circuit bleed of the brakes, if the compensation reservoir has not been drained completely during the operation. Otherwise perform a complete bleeding operation (see bleeding method).

Refit the wheels.

Tighten the wheel bolts to the recommended torque.

GETtheMANUALS.org

TIGHTENING TORQUES (in daNm)	
Brake disc mounting bolt	**1.5**
Calliper yoke bolt	**10.5**
Wheel bolt	
Ø 12	**11**
Ø 14	**13**

REMOVAL

Put the vehicle on a two post lift.

Remove:
– the front wheels,
– the calliper (see **calliper removal method**).

Hang up the calliper.

IMPORTANT: Make sure the flexible brake pipe and wheel speed sensor wiring are properly mounted, if they have been unfastened.

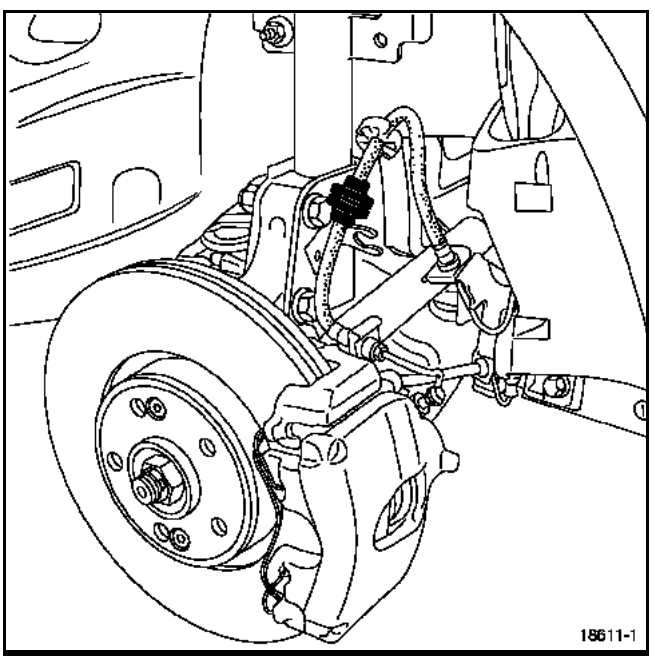

Remove:
– the two disc mounting bolts (V),

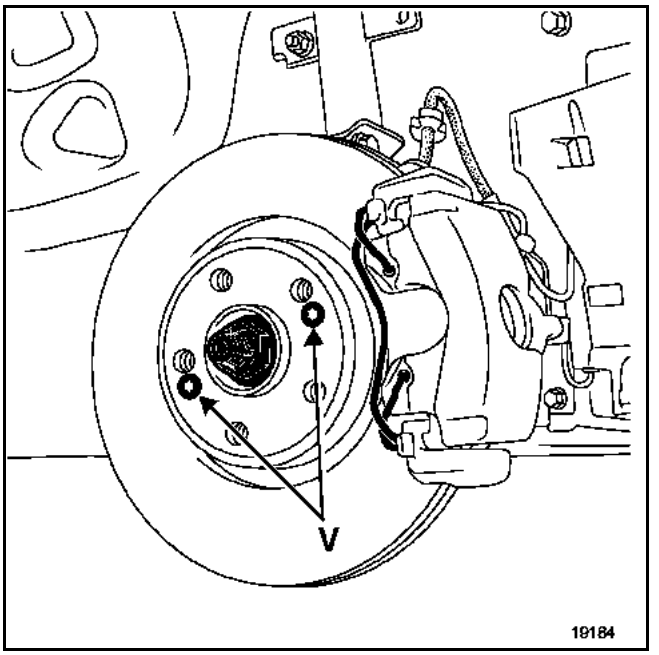

– the disc.

REFITTING

Carry out the removal procedure in reverse.

IMPORTANT: Press the brake pedal several times to bring the pistons into contact with the brake pads and discs.

Refit the wheels.

Tighten the wheel bolts to the recommended torque.

GETtheMANUALS.org

SPECIAL TOOLING REQUIRED	
T.Av. 476	Ball joint extractor
Rou. 604-01	Wheel hub locking tool

TIGHTENING TORQUES (in daNm)	
Shock absorber lower bolt	18
Lower ball joint nut	11
Track rod end nut	3.7
Brake disc mounting bolt	1.5
Calliper yoke bolt	10.5
Hub nut	28
Wheel bolt ∅ 12 ∅ 14	 11 13

REMOVAL

Put the vehicle on a two post lift.

Remove the front wheels.

Unclip the wheel speed sensor on the stub axle carrier.

Remove the calliper (see **calliper removal method**).

Hang up the calliper.

Remove:
– the hub nut (E),
– the two brake disc mounting bolts,
– the disc,
– track rod end nut (P),
– lower ball joint nut (D),
– shock absorber lower mounting bolts (J).

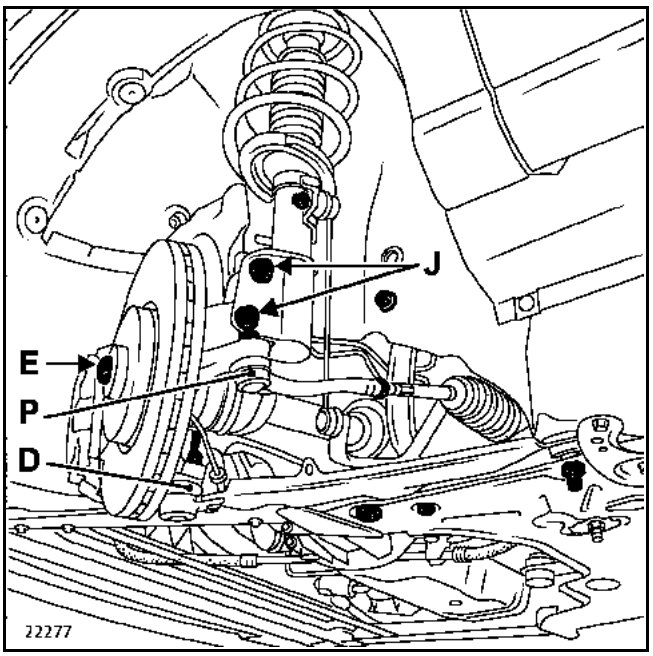

– the stub axle carrier.

REFITTING

Carry out the removal procedure in reverse.

The calliper fork bolts must be coated with a product such as **FRENEBLOC** before they are fitted.

IMPORTANT: Press the brake pedal several times to bring the pistons into contact with the brake pads and discs.

N.B.: if the vehicle is equipped with discharge bulbs, it is essential to initialise the system. See repair method in Section 80C, "Initialisation".

GETtheMANUALS.org

TIGHTENING TORQUES (in daNm)	
Shock absorber upper mounting bolt	2.1
Shock absorber rod nut	6.2
Shock absorber bolt	18
Lower ball joint nut	11
Anti-roll bar return linkage nut	4.4
Wheel bolt ∅ 12 ∅ 14	 11 13

REMOVAL

Put the vehicle on a two post lift.

Remove the front wheels.

Unfasten the shock absorber flexible brake pipe.

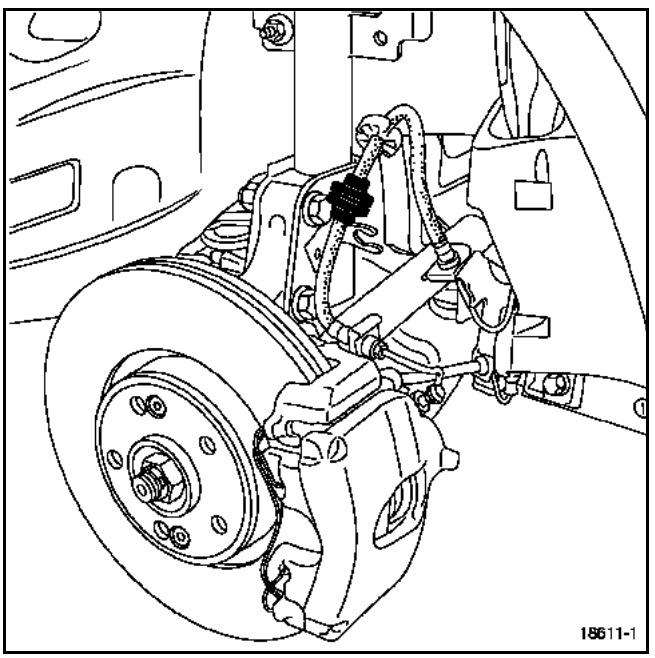

Remove:
– the upper mounting (H) of the stabiliser bar return linkage,
– track rod end nut (P),
– the shock absorber lower mounting bolts (J).

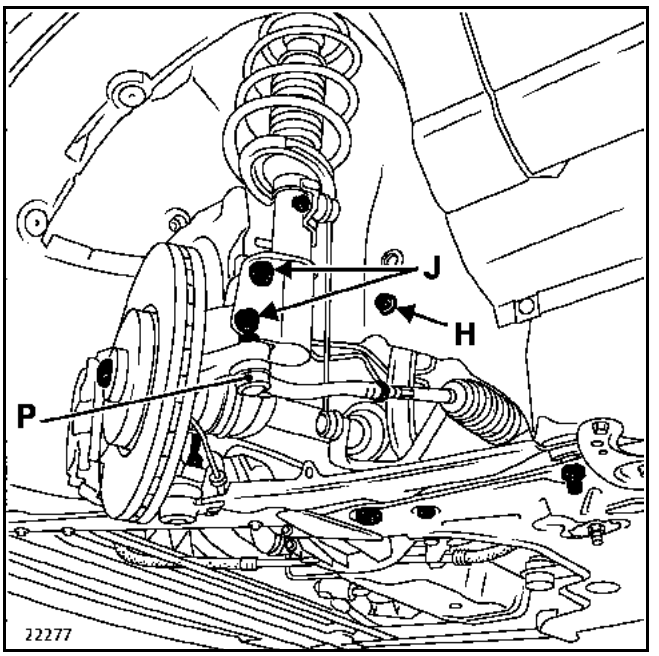

Left-hand side

Remove:
– the plastic grille,

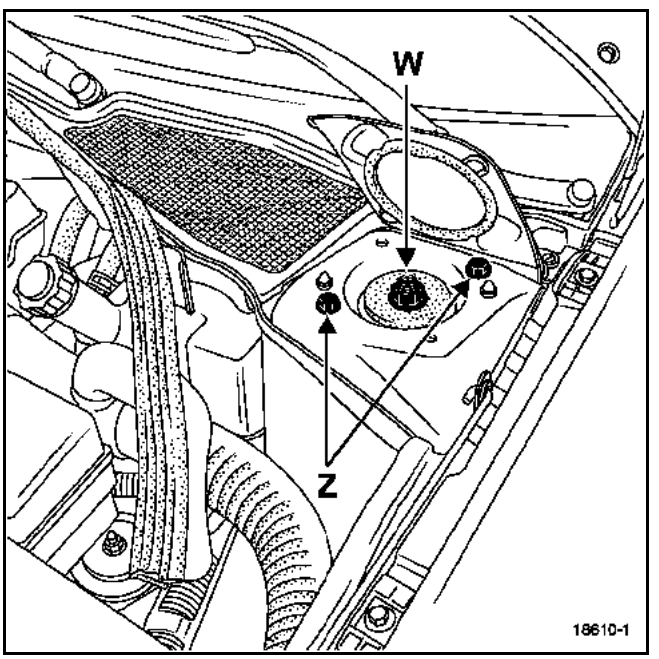

– the shock absorber rod mounting nut (W),
– the shock absorber rod upper thrust bearing,
– the two upper mounting bolts (Z) fastening the shock absorber to the body,
– the shock absorber and spring assembly.

GETtheMANUALS.org

Right-hand side

Remove:
– the plastic grille,
– the clip (K).

Raise the plastic cover (L) to access the shock absorber rod nut.

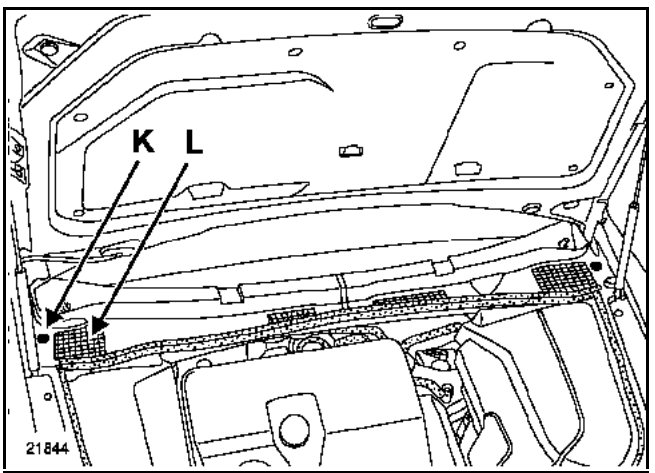

Remove:
– the shock absorber rod mounting nut,
– the shock absorber rod upper thrust bearing,
– the two upper mounting bolts fastening the shock absorber to the body,
– the shock absorber and spring assembly.

REFITTING

IMPORTANT: Make sure the flexible brake pipe and wheel speed sensor wiring are properly mounted, if they have been unfastened.

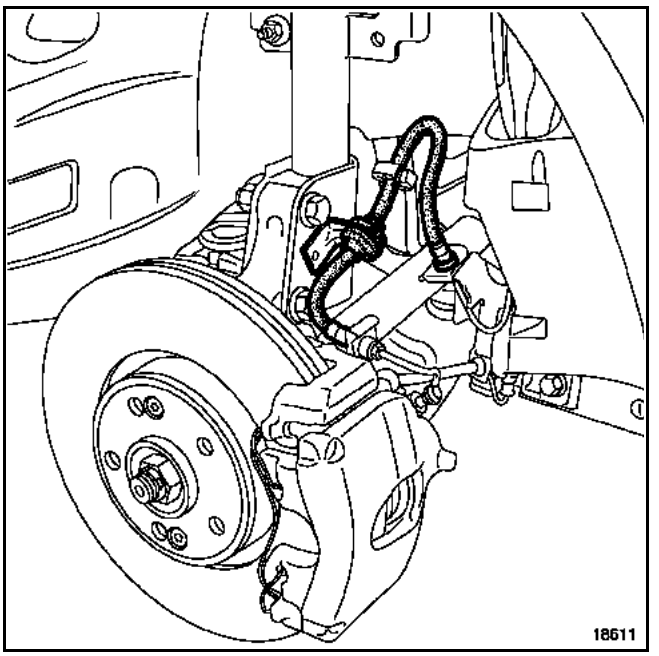

Carry out the removal procedure in reverse.

Tighten to the recommended torque.

N.B.: if the vehicle is equipped with discharge bulbs, it is essential to initialise the system. See repair method in Section 80C, "Initialisation".

GETtheMANUALS.org

SPECIAL TOOLING REQUIRED	
Sus. 578	Spanner for shock absorber mounting head flat
EQUIPMENT REQUIRED	
Compressor spring Tool for removing the shock absorber rod nut	

TIGHTENING TORQUE (in daNm)	
Shock absorber rod nut	2.1

REMOVAL

Place the appropriate cups on the compression tool and position the assembly on the spring.

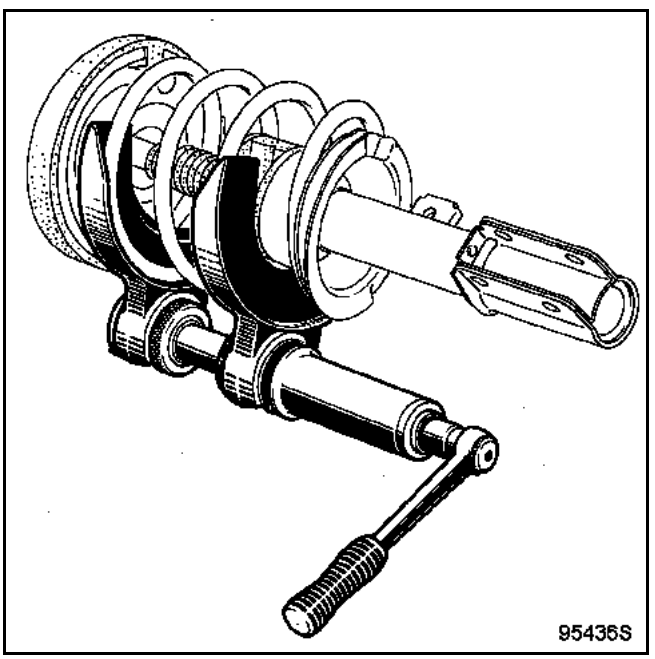

Press down on the spring until it detaches onto the cup mountings.

Using the tool, remove the shock absorber rod nut.

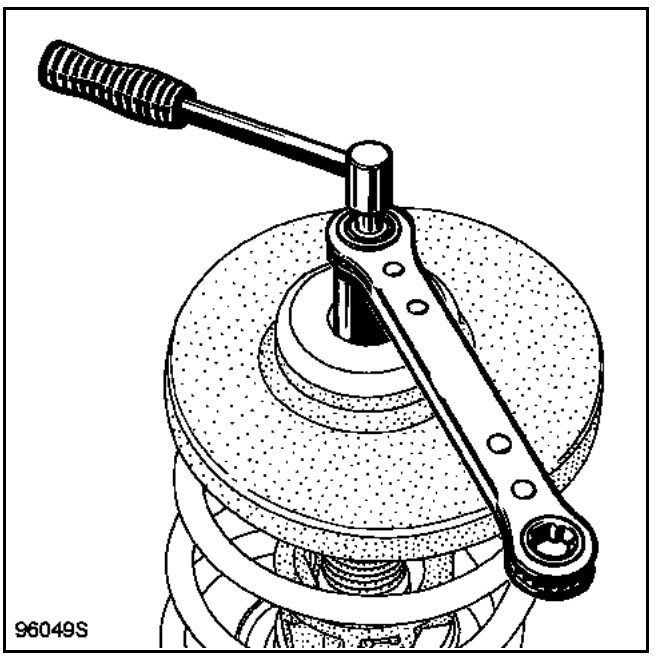

GETtheMANUALS.org

Separate the elements that make up the spring and shock absorber assembly.

REFITTING

Precautions to take before assembly:

Shock absorbers are stored horizontally. Under these conditions, it is possible that shock absorbers designed to work vertically become drained.

As a result, you just need to manually pump the shock absorber rod a few times in a vertical position before fitting the spring.

When the spring is to be replaced, respect the position of the spring and the tool cups in order to refit it easily.

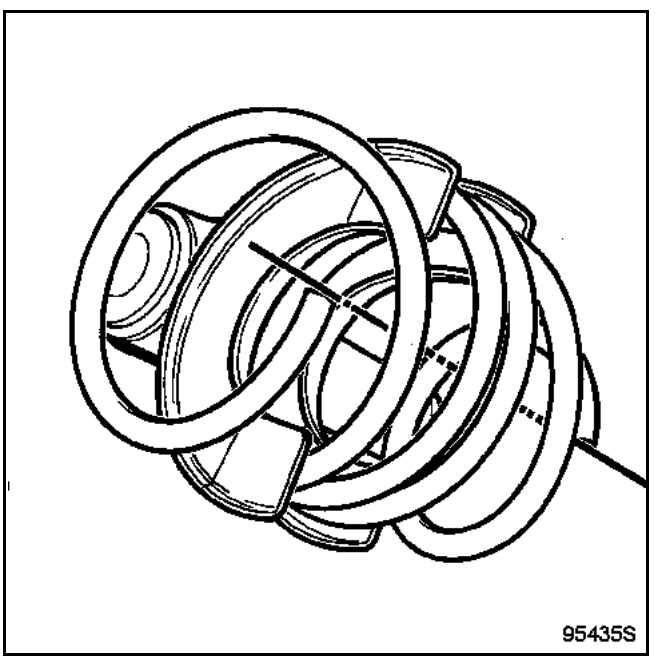

Follow the order and the direction of fitting of the constituent parts.

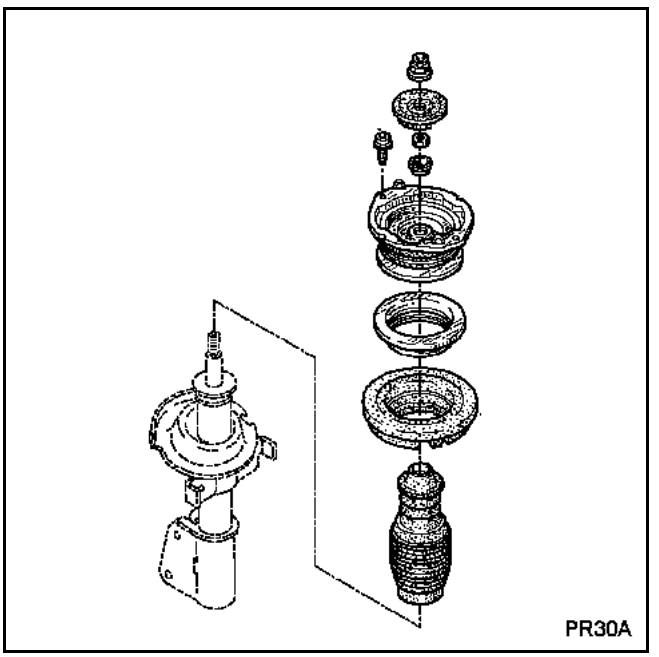

Torque tighten the new nut.

Decompress the spring and retrieve the tool.

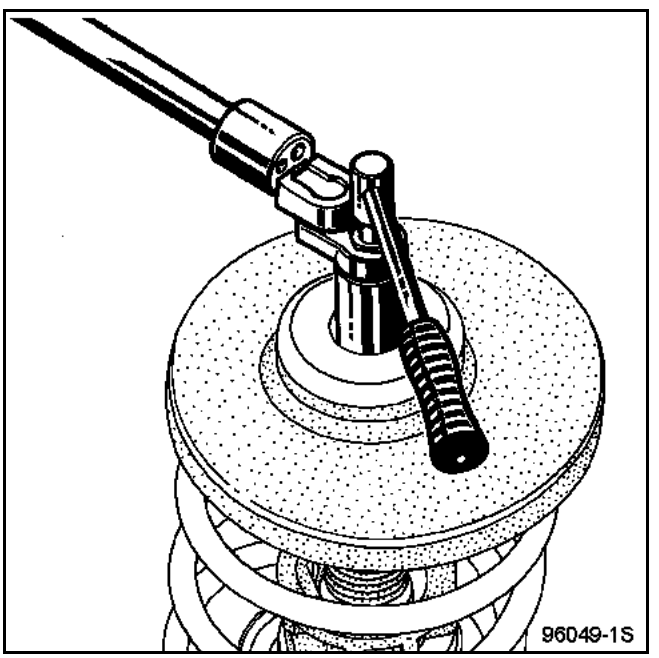

GETtheMANUALS.org

TIGHTENING TORQUES (in daNm)	
Front mounting bolt for lower arm on sub-frame	10.5
Rear mounting bolt for lower arm on sub-frame	10.5
Lower ball joint nut	11
Stabiliser bar return linkage nut	4.4
Track rod nut	3.7
Steering shaft yoke bolt	2.1
Wheel bolt ∅ 12 ∅ 14	11 13
Aluminium side member mounting bolt	4.4
Engine sub-frame tie-bar bolt	10.5
Engine tie-bar bolt	18

IMPORTANT: if the bolts from the sub-frame or the arms are removed, they must be replaced and tightened to torque.

REMOVAL

Put the vehicle on a two post lift.

Remove:
– the engine undertray,
– the lower mountings of the bumpers,
– the wheels.

Fit a steering wheel immobiliser.

Remove:
– the front mudguards,
– both left-hand tie-rods,

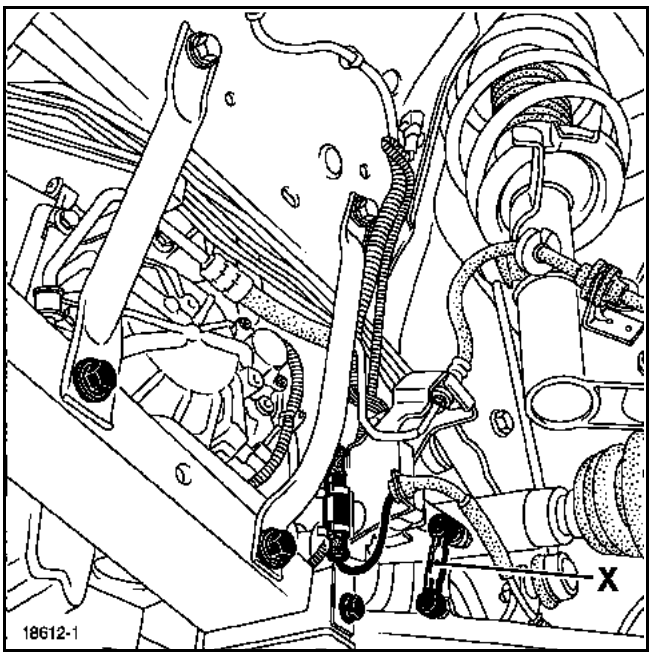

– the right-hand tie-rod,
– the bolts from the flexible brake pipe mounting bracket and wheel speed sensor,
– the linkage (X) for the discharge bulb position sensor if fitted to the vehicle.

Unclip the wheel speed sensors from the lower arm.

Remove:
– the bolts (G),
– the aluminium side members,

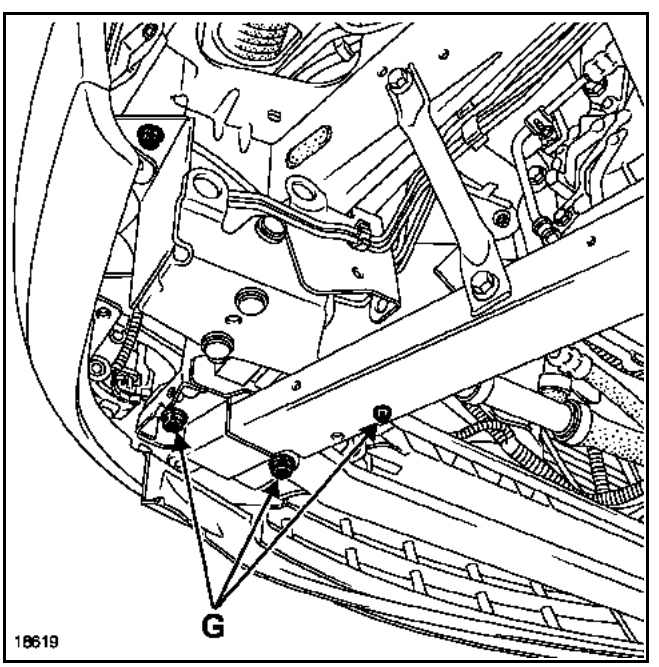

GETtheMANUALS.org

– the lower nut (H) of the stabiliser bar return linkage,
– the lower ball joint nut (D).

Loosen the upper bolt (U) on the front tie-rod.

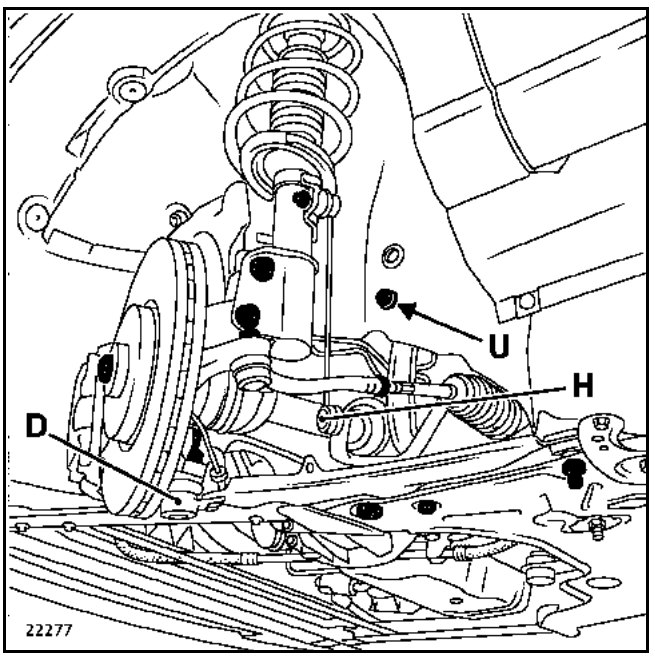

Remove:
– the steering shaft yoke bolt,
– the engine tie-bar bolts (Y),

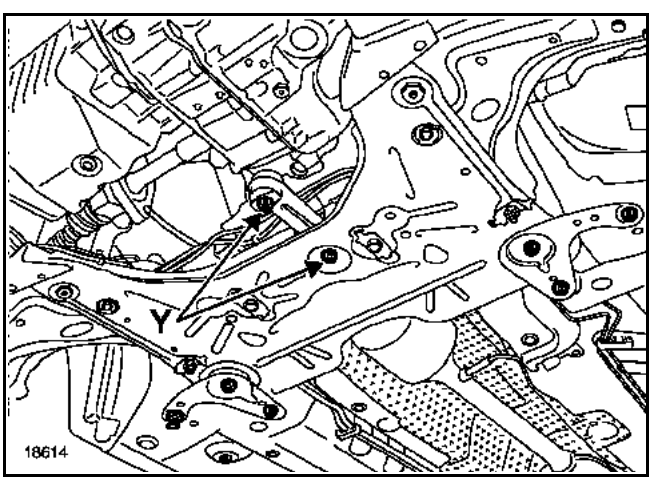

– the acoustic tie-rod bolts,
– the sub-frame rear mounting bolts.

Tilt the sub-frame forward.

Remove the two mounting bolts (C) and (B) from the lower arm.

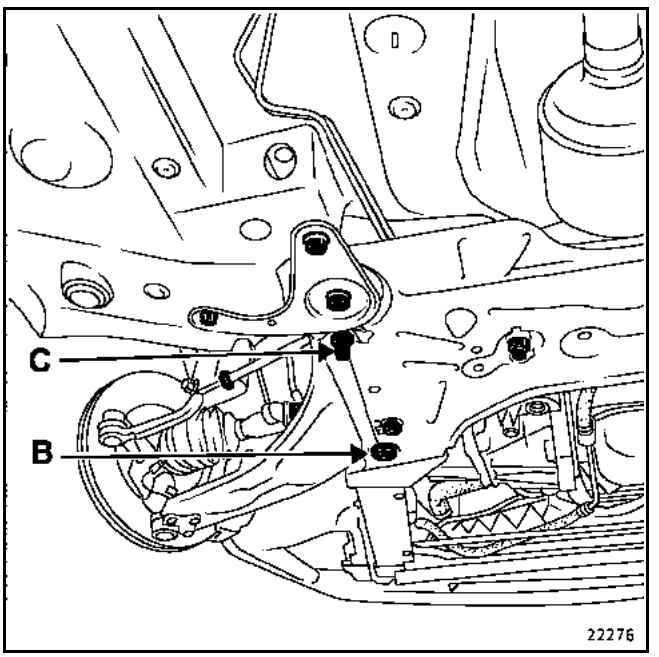

REFITTING

Replace bolts on the:
– arm,
– sub-frame,
– steering shaft yoke.

Carry out the removal procedure in reverse.

Tighten to the recommended torque.

IMPORTANT: THE STEERING SHAFT FORK BOLT REQUIRES ADJUSTMENT OF THE STEERING COLUMN. See repair method 36B, "steering column" section

N.B.: if the vehicle is equipped with discharge bulbs, it is essential to initialise the system. See repair method in Section 80C, "Initialisation".

GETtheMANUALS.org

SPECIAL TOOLING		
Mot.	453-01	Hose clamp pliers (hoses)
Tav.	476	Steering ball joint extractor
EQUIPMENT REQUIRED		
Hydraulic jack		

TIGHTENING TORQUES (in daNm)	
Anti-roll bar bearing bolt	2.1
Sub-frame mounting bolt on body	10.5
Front tie-rod upper mounting bolt	6.2
Mounting bolt for acoustic tie-rod on sub-frame	10.5
Mounting bolt for acoustic tie-rod on side cross member	10.5
Engine sub-frame tie-bar bolt	10.5
Engine tie-bar bolt	18
Anti-roll bar return linkage nut	4.4
Track rod end nut	3.7
Lower ball joint nut	11
Aluminium side member mounting bolt	4.4
Mounting bolt for tie-rod on aluminium side member	4.4
Steering shaft yoke bolt	2.1
Wheel bolt ∅ 12 ∅ 14	 11 13
Tie-rod bolt for placing on fork	3.2

The anti-roll bar is also called a stabiliser bar.

IMPORTANT: if the bolts from the sub-frame or the arms are removed, they must be replaced and tightened to torque.

REMOVAL

Put the vehicle on a two post lift.

Fit a steering wheel immobiliser.

Disconnect the battery.

Remove the wheels.

Remove:
– the engine undertray,
– the front mudguards,
– both left-hand tie-rods,

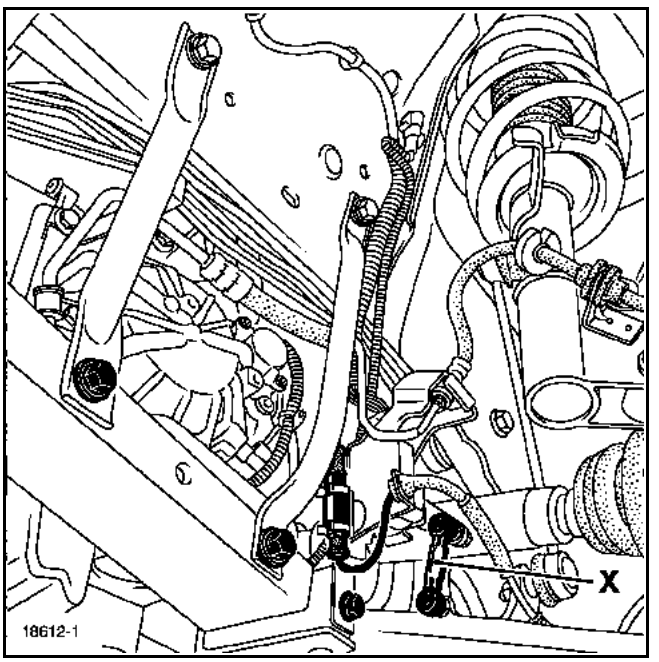

– the right-hand tie-rod,
– the bolts from the brake pipe mounting bracket and wheel speed sensor,
– the linkage (X) for the discharge bulb position sensor, if fitted to the vehicle.

Unclip the wheel speed sensors from the lower arm and sub-frame.

Remove:
– the return stabiliser bar linkage nuts (H),
– the track rod end nuts (P),
– the lower ball joint nuts (D).

GETtheMANUALS.org

Loosen bolts (U) on the front tie-rod.

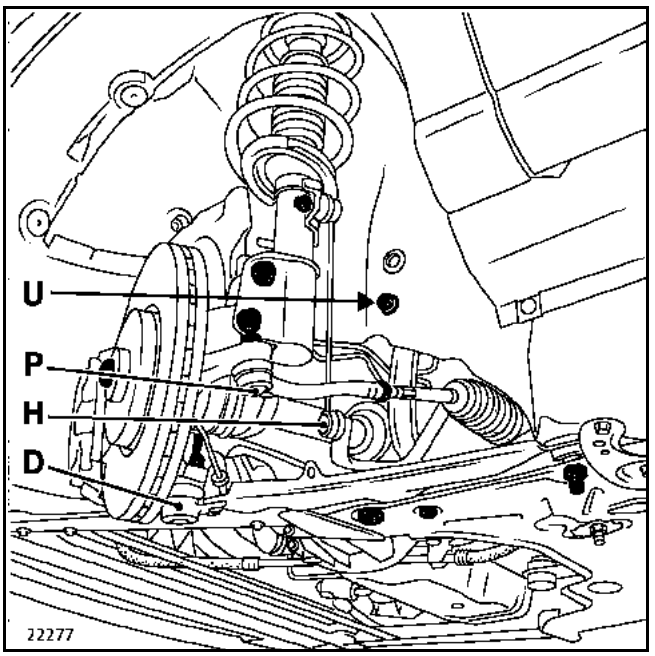

Place the hose clamp pliers **Mot. 453-01** on the low pressure hose of the power assisted steering circuit, as close as possible to the steering rack.

Remove:
– the bolts (G) from the aluminium side members,
– both aluminium side members,

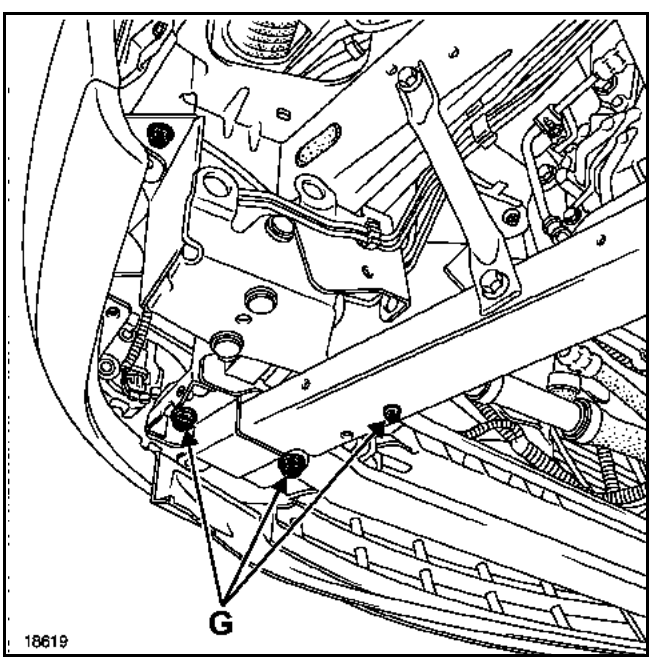

– the steering shaft yoke bolt,
– the mounting bolts for the power assisted steering pipes on the steering rack,
– the engine tie-bar bolts (Y),
– the tie-bar bolts (R), (S), (T) for placing on fork,
– the sub-frame rear mounting bolts.

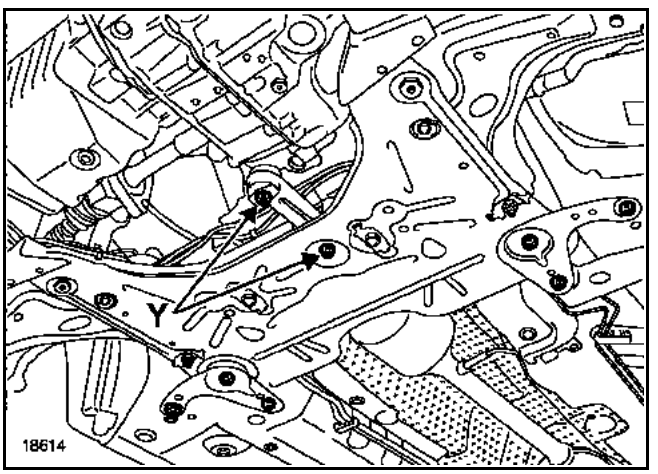

Place a component jack under the sub-frame.

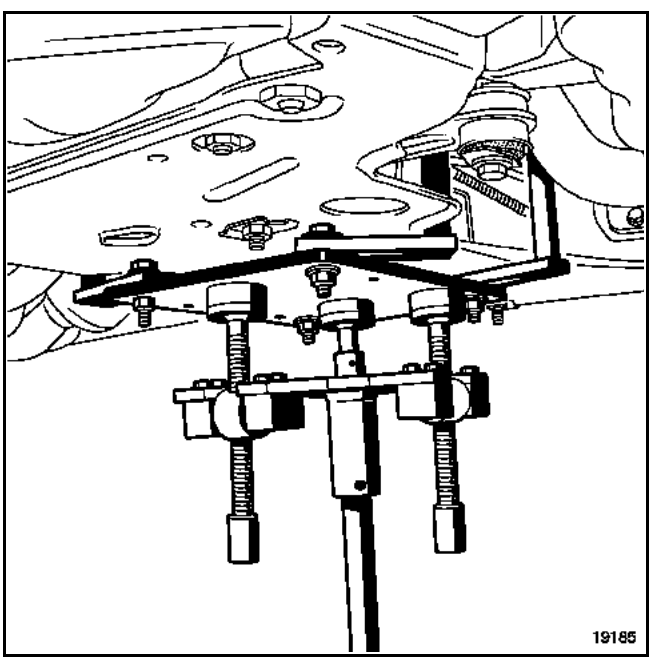

GETtheMANUALS.org

Remove the heat shield fasteners from the steering rack.

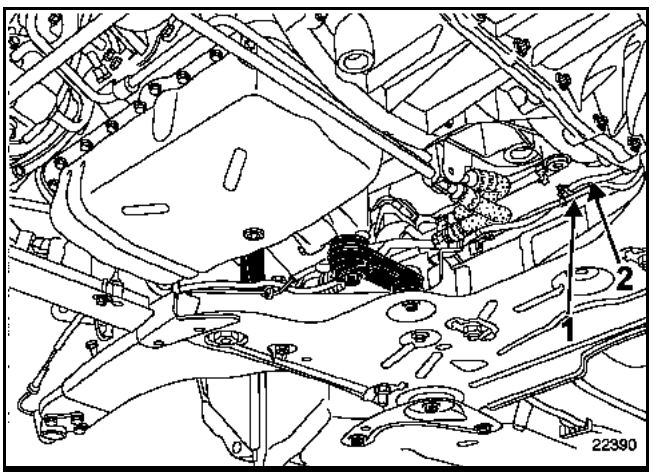

Unclip:
– the brake pipes (1),
– the wires (2) from the wheel speed sensors attached to the steering rack heat shield.

Remove the tie-rod bolts (U).

Lower the sub-frame by **20 cm**.

Remove the four stabiliser bar bolts.

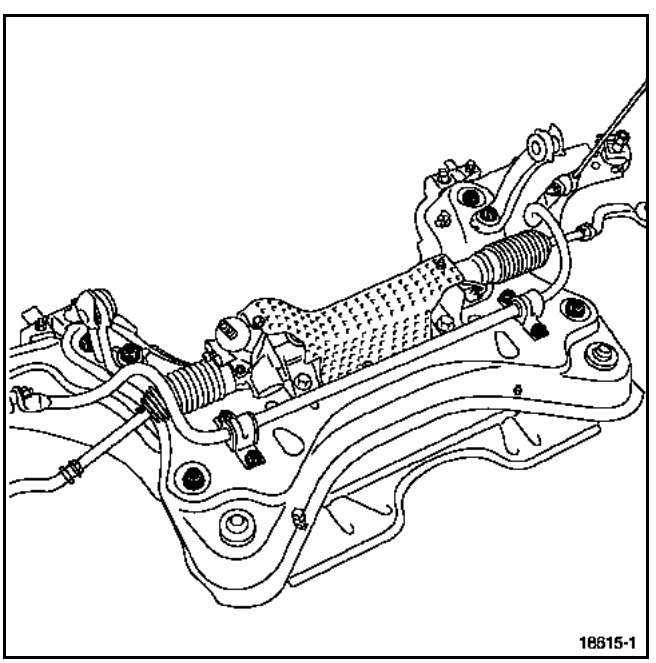

REFITTING

Fit the new sub-frame.

Replace:
– the sub-frame bolts,
– the steering shaft yoke bolt,
– the steering shaft yoke nut.

Carry out the removal procedure in reverse.

Tighten to the recommended torque.

IMPORTANT: Fitting the steering shaft yoke bolt requires adjustment of the steering column. See repair method 36B, "steering column" section.

N.B.: if the vehicle is equipped with discharge bulbs, it is essential to initialise the system. See repair method 80C, "Initialisation" section.

GETtheMANUALS.org

SPECIAL TOOLING		
Mot.	453-01	Hose clamp pliers (hoses)
Tav.	476	Steering ball joint extractor
EQUIPMENT REQUIRED		
Hydraulic jack		

TIGHTENING TORQUES (in daNm)	
Anti-roll bar bearing bolt	2.1
Sub-frame mounting bolt on body	10.5
Front tie-rod upper mounting bolt	6.2
Mounting bolt for acoustic tie-rod on sub-frame	10.5
Mounting bolt for acoustic tie-rod on side cross member	10.5
Engine tie-bar bolt on the sub-frame	10.5
Engine tie-bar bolt	18
Anti-roll bar return linkage nut	4.4
Track rod end nut	3.7
Lower ball joint nut	11
Aluminium side member mounting bolt	4.4
Mounting bolt for acoustic tie-rod on aluminium side member	4.4
Steering shaft yoke bolt	2.1
Wheel bolt ∅ 12 ∅ 14	 11 13

IMPORTANT: if the bolts from the sub-frame or the arms are removed, they must be replaced and tightened to torque.

REMOVAL

Put the vehicle on a two post lift.

Fit a steering wheel immobiliser.

Disconnect the battery.

Remove:
– the wheels,
– the engine undertray,
– the front mudguards,
– both left-hand tie-rods,

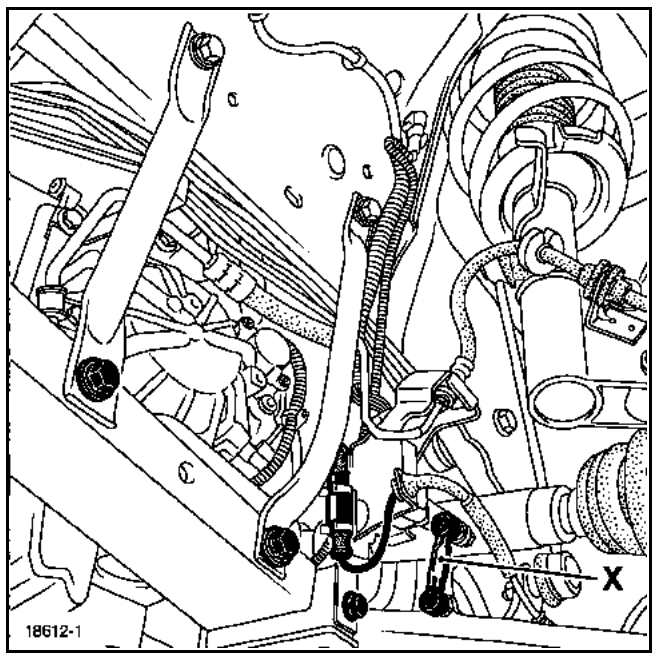

– the right-hand tie-rod,
– the bolts from the brake pipe mounting bracket and wheel speed sensor,
– the linkage (X) for the discharge bulb position sensor, if fitted to the vehicle.

Unclip the wheel speed sensors from the lower arm and sub-frame.

Remove:
– the return stabiliser bar linkage nuts (H),
– the track rod end nuts (P),
– the lower ball joint nuts (D).

GETtheMANUALS.org

Loosen bolts (U) on the front tie-rod.

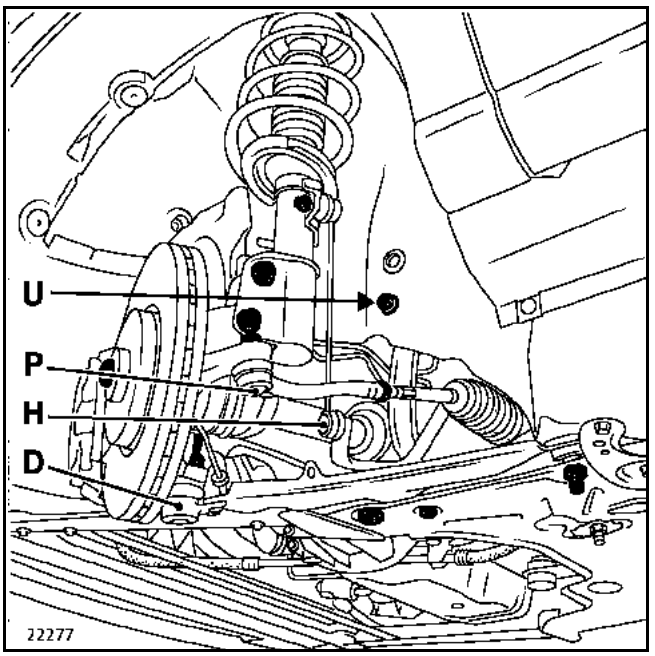

Place the hose clamp pliers **Mot. 453-01** on the low pressure hose of the power assisted steering circuit, as close as possible to the steering rack.

Remove:
– the bolts (G) from the aluminium side members,
– both aluminium side members,

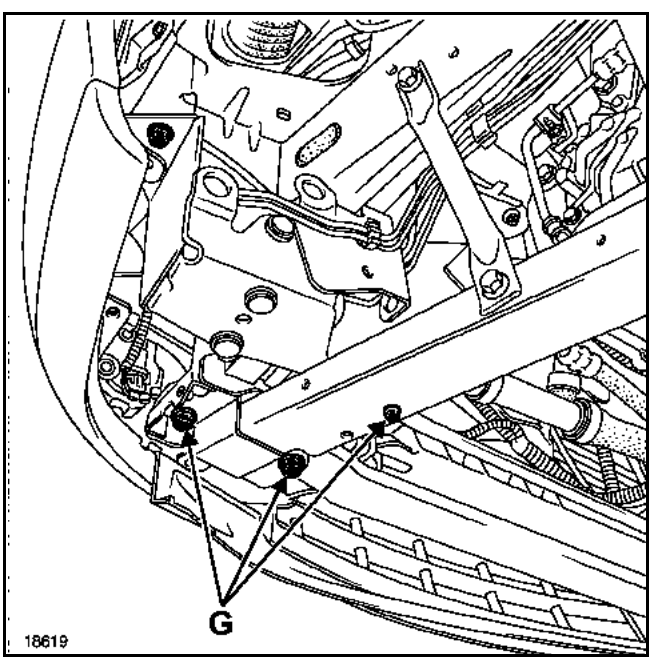

– the steering shaft yoke bolt,
– the mounting bolts for the power assisted steering pipes on the steering rack,
– the engine tie-bar bolts (Y),
– the acoustic tie-rod bolts (R), (S), (T),
– the sub-frame rear mounting bolts.

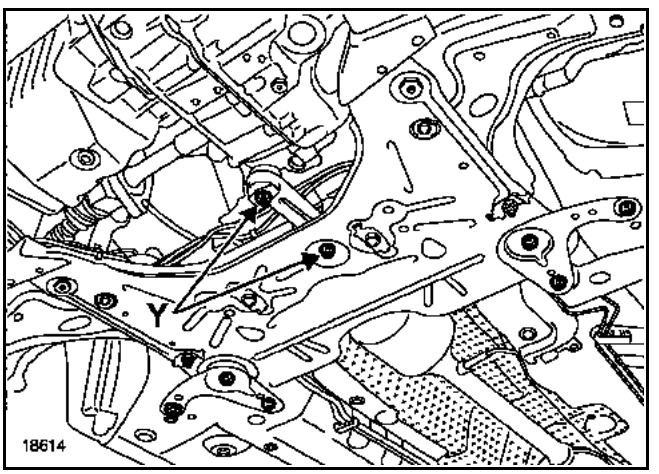

Place a component jack under the sub-frame.

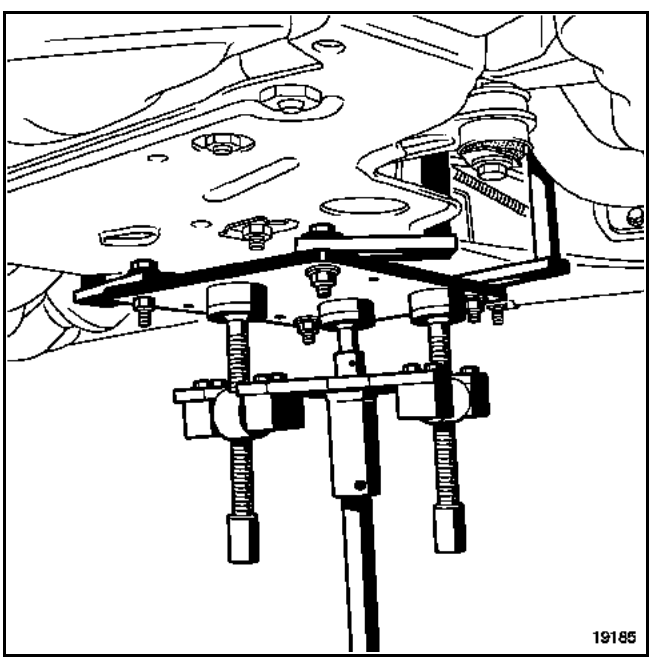

GETtheMANUALS.org

Remove the heat shield fasteners from the steering rack.

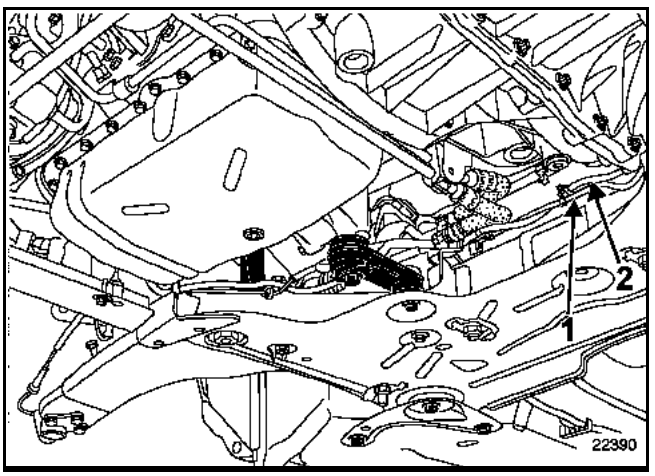

Unclip:
– the brake pipes (1),
– the wires (2) from the wheel speed sensors attached to the steering rack heat shield.

Remove:
– the plate covering the pipes and cables,
– the tie-rod bolts (U),
– the sub-frame.

Remove equipment from the sub-frame.

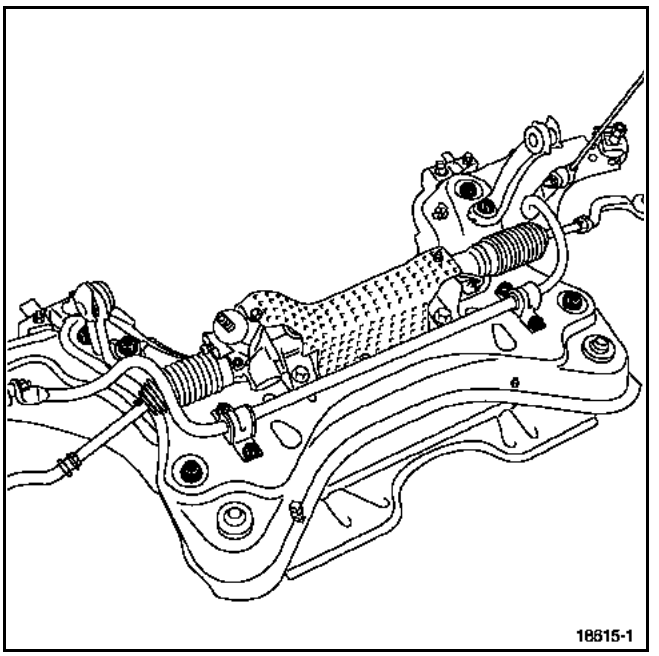

REFITTING

Fit the new sub-frame.

Replace:
– the sub-frame bolts,
– the steering shaft yoke bolt,
– the steering shaft yoke nut.

Carry out the removal procedure in reverse.

Tighten to the recommended torque.

IMPORTANT: Fitting the steering shaft yoke bolt requires adjustment of the steering column. See repair method 36B, "steering column" section.

IMPORTANT: Reinitialise the electrical components after connecting the battery. See repair method **80A, "Special Notes" section**.
Adjust the running gear. See repair method **07B, "angle checking value" section**.

N.B.: if the vehicle is equipped with discharge bulbs, it is essential to initialise the system. See repair method 80C, "Initialisation" Section
If the vehicle is equipped with cruise control, it is essential to initialise the range finder. See repair method 83D, "initialisation" section.

GETtheMANUALS.org

SPECIAL TOOLING REQUIRED	
Rear brake caliper piston return tool - BREMBO type	Piston return tool

TIGHTENING TORQUES (in daNm)	
Wheel bolt	
M12 x 150	**11**
M14 x 150	**13**
Brake calliper mounting bolt (pillars)	**2.8**

REMOVAL

Put the car on a two post lift.

Release the parking brake. Remove the rear wheels.

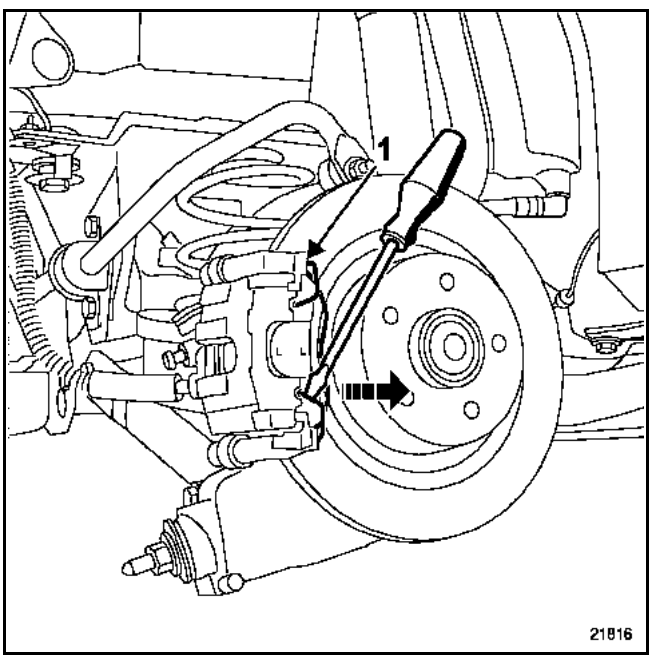

To prevent the spring from slipping, it is essential to hold the parking brake in position during the removal operation using pliers.

Remove the retaining springs (1) using a wide, flathead screwdriver.

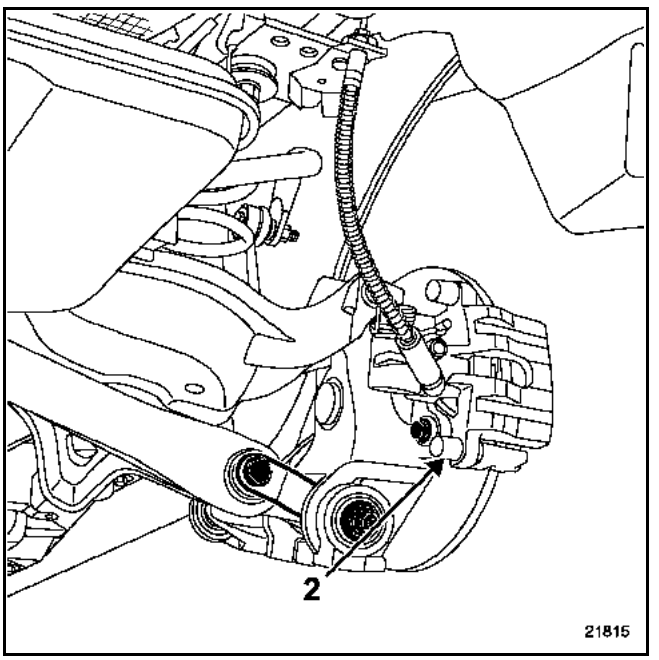

Remove the calliper lower mounting bolts (pillars) (2).

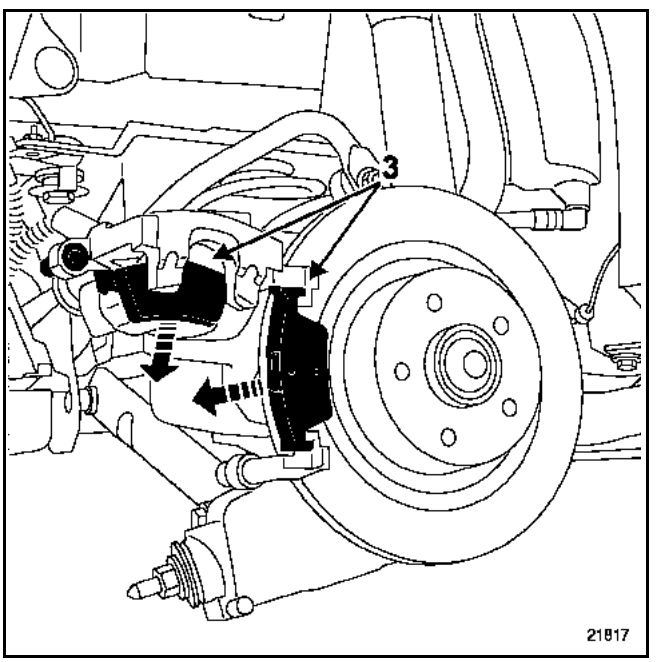

Turn the callipers upwards.

Remove the brake pads (3) from both sides of the vehicle.

GETtheMANUALS.org

Check:
– the condition of the hose and replace it if necessary,
– the condition of the brake pads (**if they need replacing, it is essential to replace the pads on the opposite side as well**),
– the condition of the disc (**if it needs replacing, it is essential to replace the disc on the opposite side as well, plus the pads**),
– the condition and fitting of the piston dust seals,
– the condition of the guides.

Clean the calliper mountings and callipers.

REFITTING

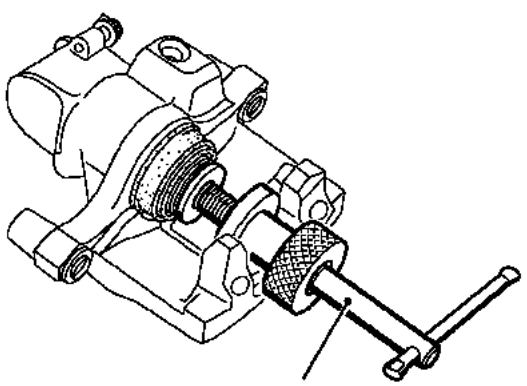

Reinsert the pistons in the callipers using tool **rear break caliper piston return tool - BREMBO type**.

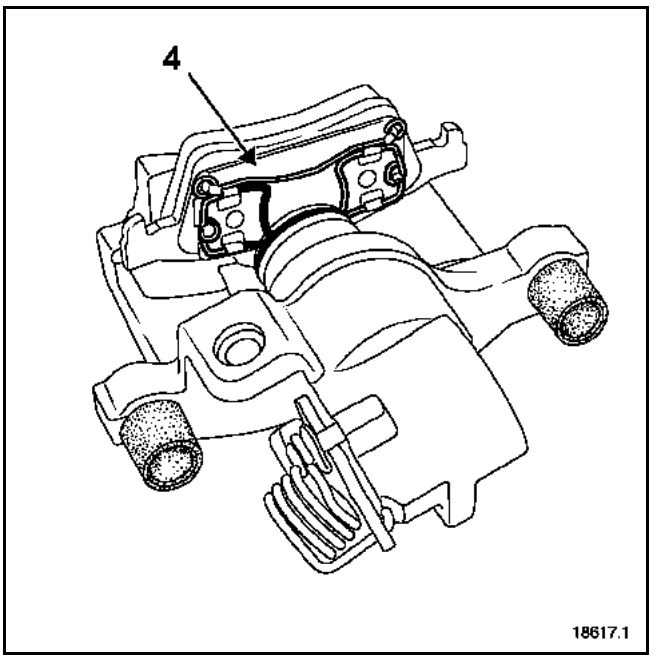

CAUTION: the inner brake pad is fitted with a retaining spring (4); it is essential to fit it to the calliper piston.

Refit:
– the new brake pads,
– the callipers,
– the calliper mounting bolts and tighten to the recommended torque.

Depress the brake pedal several times to bring the pistons into contact with the brake pads and discs. Check the brake fluid level.

Refit the wheels.

Tighten the wheel bolts to the recommended torque.

GETtheMANUALS.org

SPECIAL TOOLING REQUIRED	
Rear brake caliper piston return tool - BREMBO type	Piston return tool

TIGHTENING TORQUES (in daNm)	
Wheel bolt	
M12 x 150	**11**
M14 x 150	**13**
Brake calliper mounting bolt (pillars)	**2.8**
Flexible brake pipe	**1.4**

REMOVAL

Put the car on a two post lift.

Release the parking brake. Remove the rear wheels.

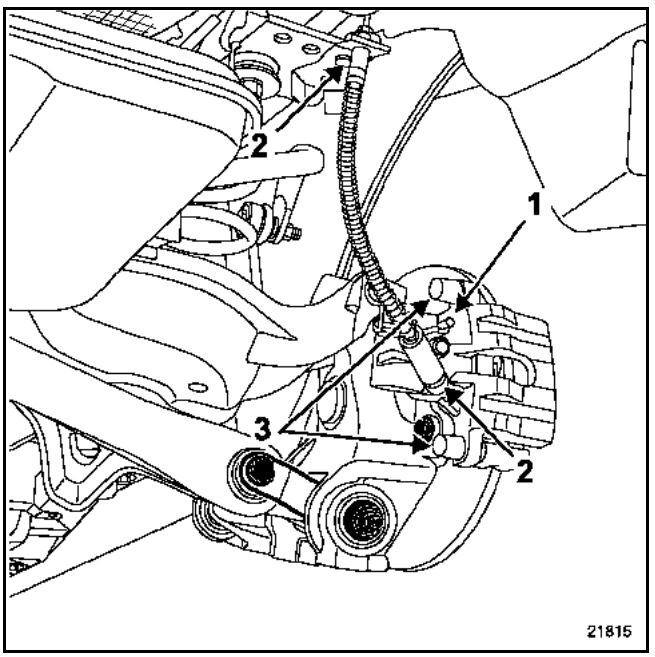

Disconnect the handbrake cable (1).

Remove:
- the calliper support mounting bolts (pillars) (3),
- the calliper and the brake pads (refer to the relevant procedure).

Depress the brake pedal using a pedal press (this limits the flow of brake fluid).

Disconnect the flexible brake pipe (2). Fit caps to limit the flow of brake fluid.

Check:
- the condition of the hose and replace it if necessary,
- the condition of the brake pads (**if they need replacing, it is essential to replace the pads on the opposite side as well**),
- the condition of the disc (**if it needs replacing, it is essential to replace the disc on the opposite side as well, plus the pads**),
- the condition and fitting of the piston dust seals,
- the condition of the guides.

Clean the calliper mountings and callipers.

GETtheMANUALS.org

REFITTING

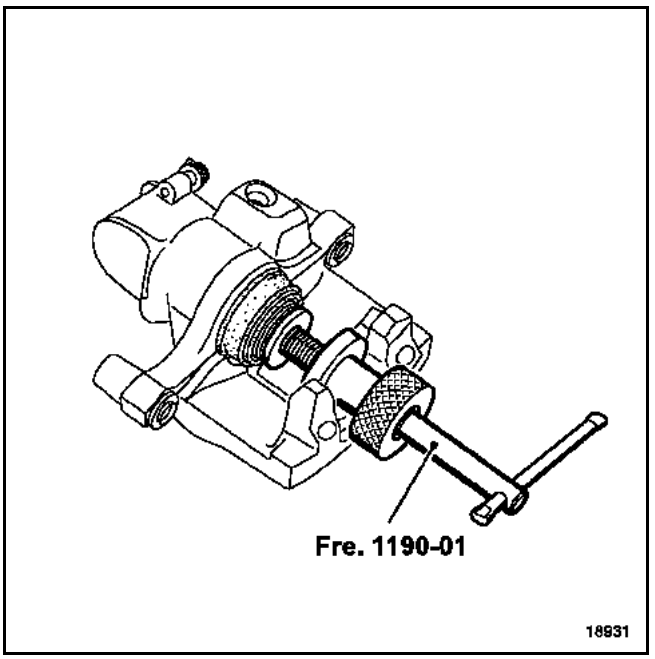

Force the calliper pistons back using tool **rear brake caliper piston return tool - BREMBO type**.

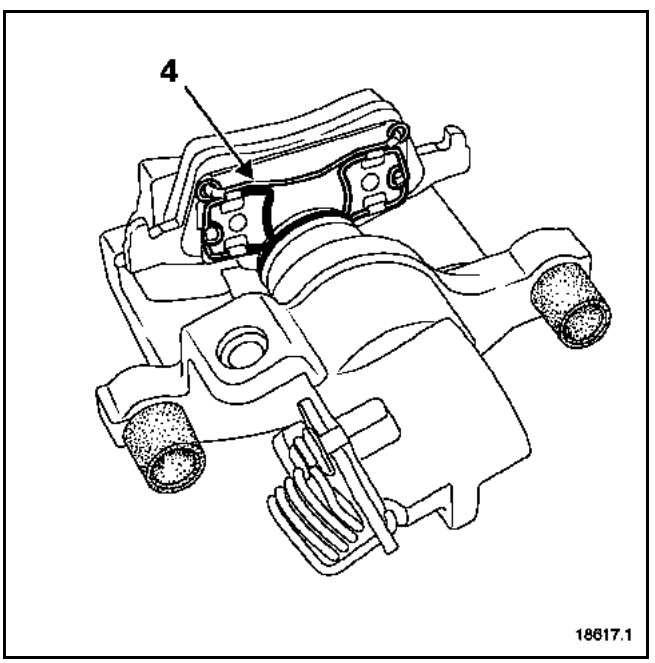

CAUTION: the inner brake pad is fitted with a retaining spring (4); it is essential to fit it to the calliper piston.

Refit:
– the brake pads,
– the calliper,
– the calliper mounting bolts, tighten to the recommended torque,
– the flexible brake pipe; tighten to the recommended torque.

Bleed the brake circuit (refer to the relevant method).

Depress the brake pedal several times to bring the pistons into contact with the brake pads and discs. Check the brake fluid level.

Refit the wheels.

Tighten the wheel bolts to the recommended torque.

GETtheMANUALS.org

SPECIAL TOOLING REQUIRED	
Rear brake caliper piston return tool - BREMBO type	**Piston return tool**

TIGHTENING TORQUES (in daNm)	
Wheel bolt	
M12 x 150	**11**
M14 x 150	**13**
Calliper support mounting bolts	**10.5**
Brake calliper mounting bolt (pillars)	**2.8**
Flexible brake pipe	**1.4**

REMOVAL

Put the car on a two post lift.

Release the parking brake. Remove the rear wheels.

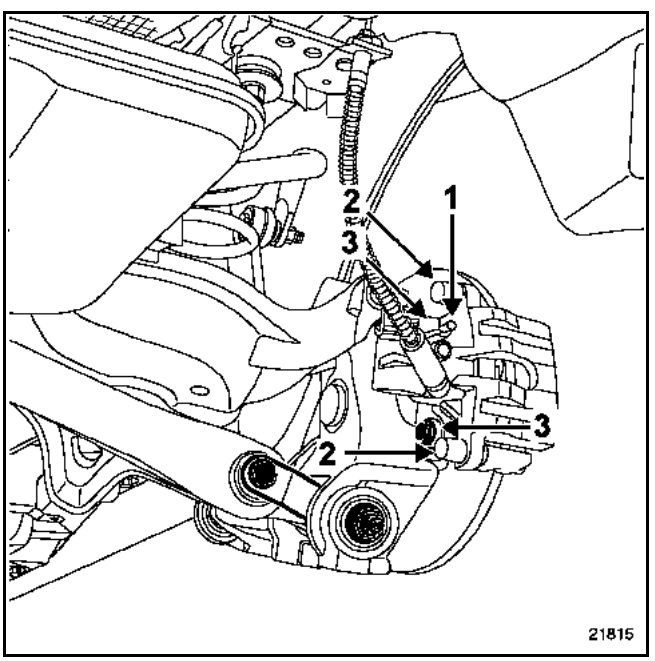

Disconnect the handbrake cable (1).

Remove the calliper mounting bolts (2).

Attach the calliper to the sub-frame.

Remove:
- the calliper (3) support mounting bolts,
- the pads (refer to the relevant procedure),
- the calliper mounting.

Check:
- the condition of the hose and replace it if necessary,
- the condition of the brake pads (**if they need replacing, it is essential to replace the pads on the opposite side as well**),
- the condition of the disc (**if it needs replacing, it is essential to replace the disc on the opposite side as well, plus the pads**),
- the condition and fitting of the piston dust seals,
- the condition of the guides.

Clean the calliper mountings and callipers.

GETtheMANUALS.org

REFITTING

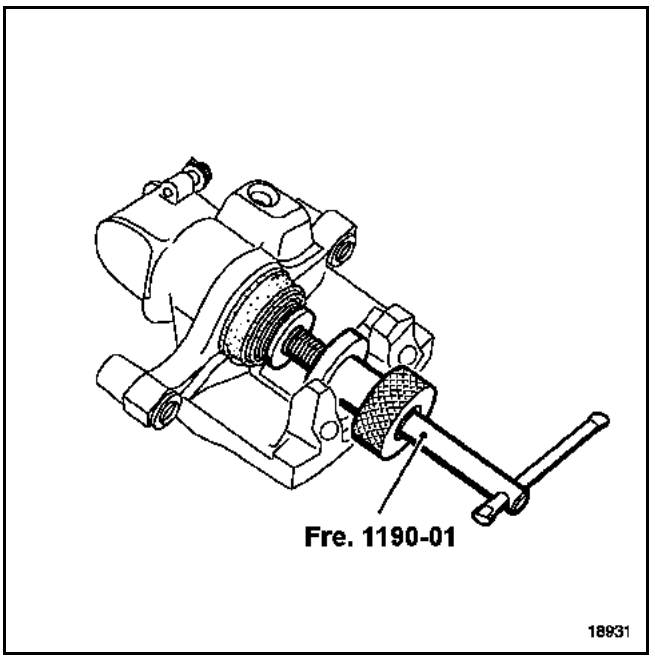

Reinsert the pistons in the callipers using tool **Rear brake caliper piston return tool - BREMBO type**.

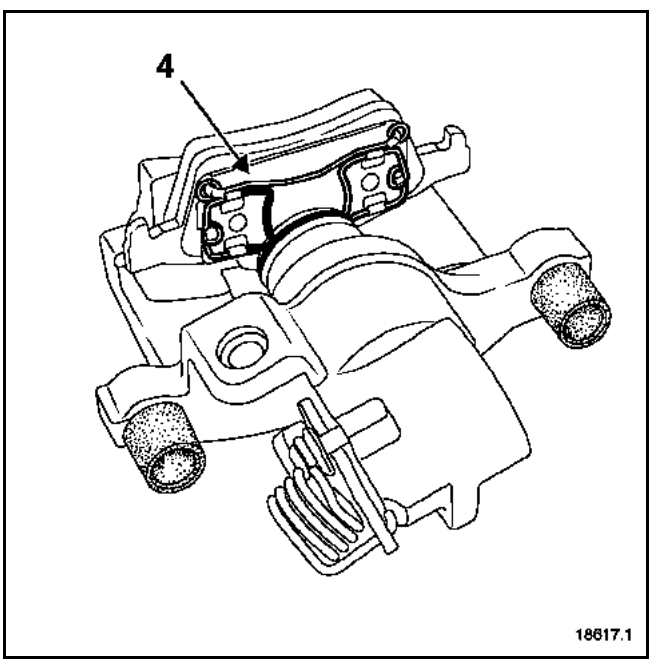

CAUTION: the inner brake pad is fitted with a retaining spring (4); it is essential to fit it to the calliper piston.

Refit:
- the calliper mounting,
- the new calliper support mounting bolts; tighten to the recommended torque,
- the brake pads,
- the calliper,
- the calliper mounting bolts, tighten to the recommended torque,
- the handbrake cable.

Depress the brake pedal several times to bring the pistons into contact with the brake pads and discs. Check the brake fluid level.

Refit the wheels.

Tighten the wheel bolts to the recommended torque.

GETtheMANUALS.org

SPECIAL TOOLING REQUIRED	
Rear brake caliper piston return tool - BREMBO type	Piston return tool

TIGHTENING TORQUES (in daNm)	
Wheel bolt	
M12 x 150	**11**
M14 x 150	**13**
Stub-axle nut	**28**
Calliper support mounting bolts	**10.5**
Brake calliper mounting bolt (pillars)	**2.8**
Flexible brake pipe	**1.4**

REMOVAL

Caution: be careful not to damage the speed sensor target when carrying out operations.

Put the car on a two post lift.

Release the parking brake. Remove the rear wheels.

Remove:
– the calliper support (refer to the relevant procedure),
– the hub cover plug,
– the stub-axle nut,
– the disc.

Check:
– the condition of the hose and replace it if necessary,
– the condition of the brake pads (**if they need replacing, it is essential to replace the pads on the opposite side as well**),
– the condition of the disc (**if it needs replacing, it is essential to replace the disc on the opposite side as well, plus the pads**),
– the condition and fitting of the piston dust seals,
– the condition of the guides.

Clean the calliper mountings and callipers.

REFITTING

Refit:
– the disc,
– the stub-axle nut, tighten to the recommended torque,
– the hub cover plug,
– the brake pads,
– the calliper,
– the calliper mounting bolts, tighten to the recommended torque,
– the handbrake cable.

Depress the brake pedal several times to bring the pistons into contact with the brake pads and discs. Check the brake fluid level.

Refit the wheels.

Tighten the wheel bolts to the recommended torque.

GETtheMANUALS.org

PRESENTATION

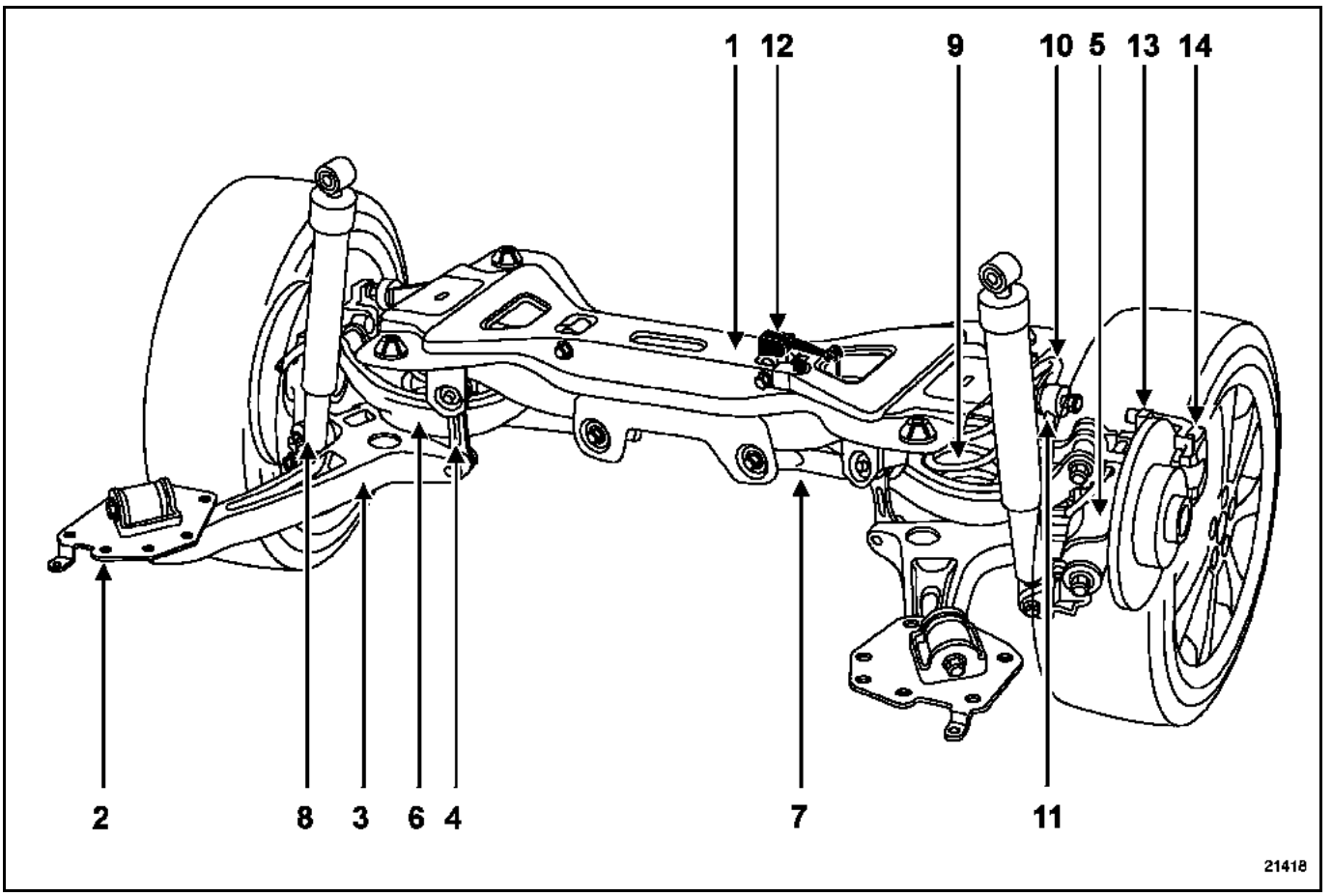

Description of the main rear axle components:

Mark number	Description	Single part	Left and right-hand parts	
			identical	different
1	Sub-frame	X		
2	Bearing			X
3	Longitudinal arm			X
4	Vertical arm			X
5	Stub axle carrier			X
6	Upper transverse arm		X	
7	Lower transverse arm		X	
8	Shock absorber		X	
9	Spring		X	
10	Anti-roll bar	X		
11	Anti-roll bar tie rod		X	
12	Attitude sensor	X		
13	Brake discs		X	
14	Brake calliper			X

GETtheMANUALS.org

TOOL: Sus. 1656 Spring compression tool

This tool should be used when removing the following components:
– the complete rear axle,
– stub axle carrier,
– longitudinal arm,
– upper arm,
– lower arm,
– vertical arm,
– shock absorber,
– sub-frame,
– spring,
– bearing,
– anti-roll bar tie rod.

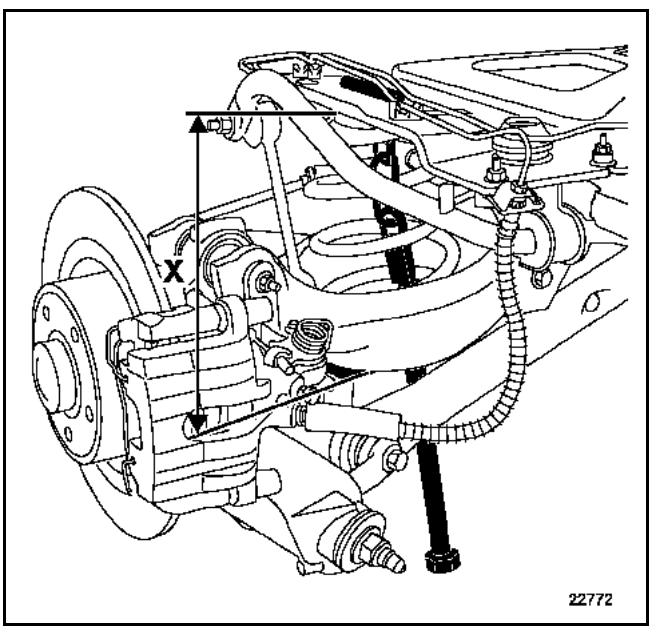

Fit tool **Sus. 1656**. Tighten or untighten the tool to obtain the X measurements specified in the procedures. The X measurement is measured between the lower sub-frame surface and the upper arm lower surface is closest to the tool shaft.
It is advisable to lubricate the thread with high pressure lubricating grease.

TOOL: T. Ar. 1655 Adjustment bar

This tool should be used to adjust the wheel alignment of the rear axle.

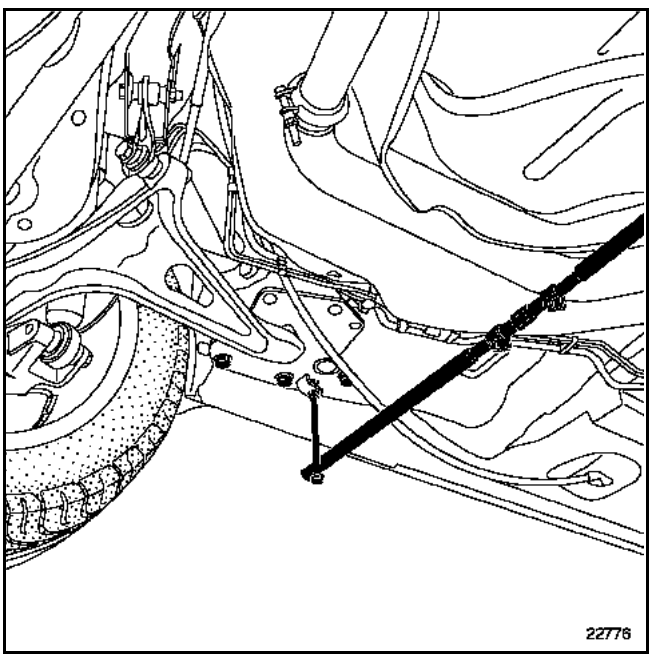

Fit tool **T. Ar. 1655**. Tighten or loosen the tool to set the wheel alignment angle for each wheel specified in the procedures (refer to **Section 07B**). To make adjustments, it is necessary to unscrew the longitudinal arm bearing mounting bolts.

Check the angles of the camber then the rear and front wheel alignment.

Adjustment of the rear camber requires the adjustment of the front and rear wheel alignment.

Depending on the vehicle equipment, check and adjust:
– the adaptive cruise control (refer to the relevant procedure in **Section 83D**),
– the discharge bulb headlights (refer to the relevant procedure in **Section 83C**).

GETtheMANUALS.org

SPECIAL TOOLING REQUIRED	
Sus. 1656	Spring compression tool

TIGHTENING TORQUES (in daNm)	
Wheel bolt	
M12 x 150	**11**
M14 x 150	**13**
Shock absorber mounting bolt	**10.5**
Upper mounting nut for anti-roll bar tie rod	**6.2**

This procedure enables you to work on one shock absorber at a time. This procedure must be repeated in full when working on the second shock absorber.

REMOVAL

Put the car on a two post lift.

Remove:
– the wheel,
– the anti-roll bar tie rod (1) upper nut.

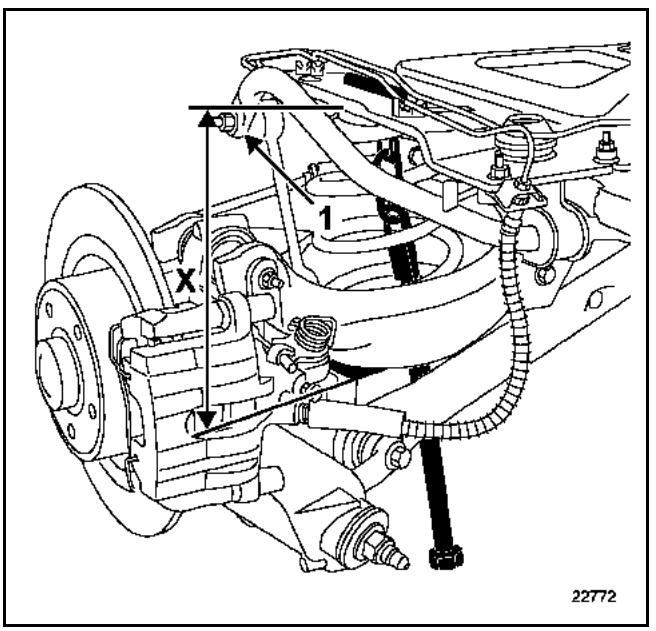

Fit tool **Sus. 1656**. Operate the tool to obtain the measurement **X = 21 cm ± 0.5 cm**.

Remove:
– the shock absorber mounting bolts,
– the shock absorber.

NOTE: the shock absorbers are fitted horizontally. Under these conditions it is possible that the shock absorbers, which are designed to operate in a vertical direction, will have de-primed.

As a result, before fitting the shock absorber on the rear axle, pump the shock absorber rod a few times in vertical position.

REFITTING

Refit:
– the shock absorber,
– the shock absorber mounting bolts and tighten to the recommended torque.

Remove the tool.

Refit:
– the upper nut on the anti-roll bar tie rod, tighten to the recommended torque,
– the wheel; tighten to the recommended torque.

GETtheMANUALS.org

SPECIAL TOOLING REQUIRED	
Sus. 1656	Spring compression tool

TIGHTENING TORQUES (in daNm)	
Wheel bolt	
M12 x 150	**11**
M14 x 150	**13**
Upper mounting nut for anti-roll bar tie rod	**6.2**
Stub axle carrier lower mounting bolt	**23**
Stub axle carrier upper mounting bolt	**10.5**
Shock absorber mounting bolt	**10.5**

REMOVAL

Put the car on a two post lift.

Remove:
– the wheel,
– the anti-roll bar tie rod (4) upper nut.

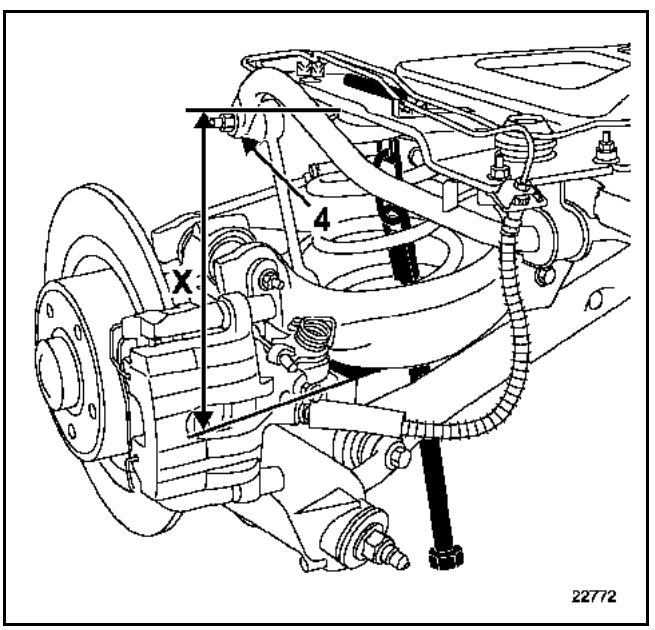

Fit tool **Sus. 1656**. Operate the tool to obtain the measurement **X = 21 cm ± 0.5 cm**.

Remove:
– the brake disc (refer to the relevant procedure),
– the shock absorber (refer to the relevant procedure).

Unclip the wheel speed sensor.

Remove:
– the stub axle carrier upper mounting bolt,
– the stub axle carrier lower mounting bolt,
– the stub axle carrier.

REFITTING

Carry out the removal procedure in reverse.

Remove tool **Sus. 1656**.

Check the angles of the camber then the rear and front wheel alignment.

Adjustment of the rear camber requires the adjustment of the front and rear wheel alignment.

Depending on the vehicle equipment, check and adjust:
– the adaptive cruise control (refer to the relevant procedure in **Section 83D**),
– the discharge bulb headlights (refer to the relevant procedure in **Section 83C**).

GETtheMANUALS.org

SPECIAL TOOLING REQUIRED	
Sus. 1656	Spring compression tool

TIGHTENING TORQUES (in daNm)	
Upper mounting nut for anti-roll bar tie rod	6.2
Vertical arm lower mounting bolt	10.5
Vertical arm upper mounting bolt	6.2

REMOVAL

Put the car on a two post lift.

Remove:
– the wheel,
– the anti-roll bar tie rod (1) upper nut.

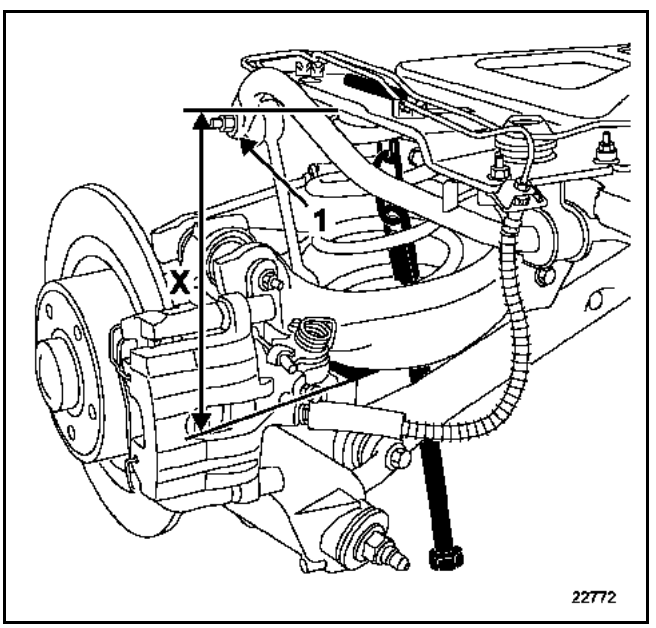

Fit tool **Sus. 1656**. Operate the tool to obtain the measurement **X = 21 cm ± 0.5 cm**.

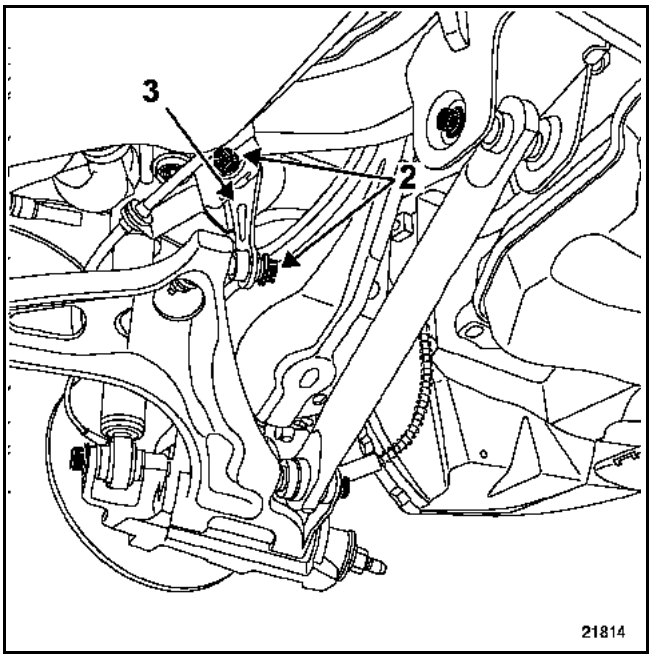

Remove:
– the vertical arm mounting bolts (2),
– the vertical arm (3).

REFITTING

NOTE: move the vertical arm marking towards the rear; move the bolt heads towards the rear.

Carry out the removal procedure in reverse.

Remove tool **Sus. 1656**.

Check the angles of the camber then the rear and front wheel alignment.

Adjustment of the rear camber requires the adjustment of the front and rear wheel alignment.

Depending on the vehicle equipment, check and adjust:
– the adaptive cruise control (refer to the relevant procedure in **Section 83D**),
– the discharge bulb headlights (refer to the relevant procedure in **Section 83C**).

GETtheMANUALS.org

SPECIAL TOOLING REQUIRED	
Sus. 1656	Spring compression tool

TIGHTENING TORQUE (in daNm)	
Lower arm mounting bolt	10.5

REMOVAL

Put the car on a two post lift.

Remove:
– the wheel,
– the anti-roll bar tie rod (1) upper nut.

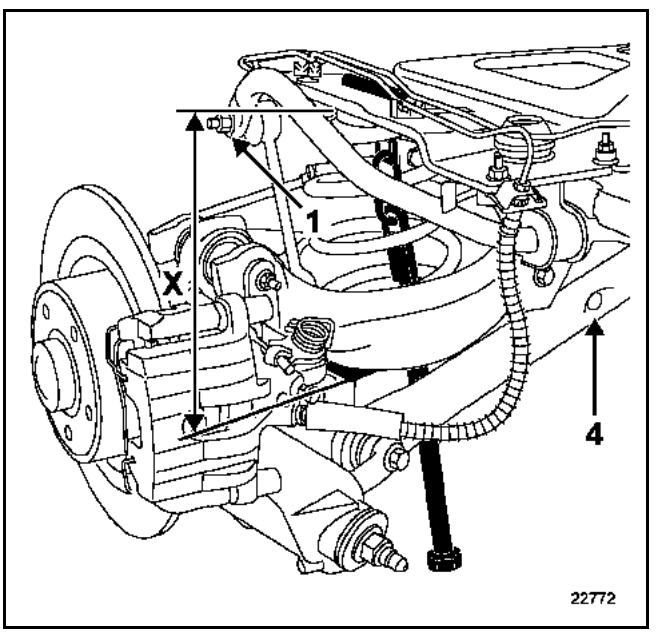

Fit tool **Sus. 1656**. Operate the tool to obtain the measurement **X = 21 cm ± 0.5 cm**.

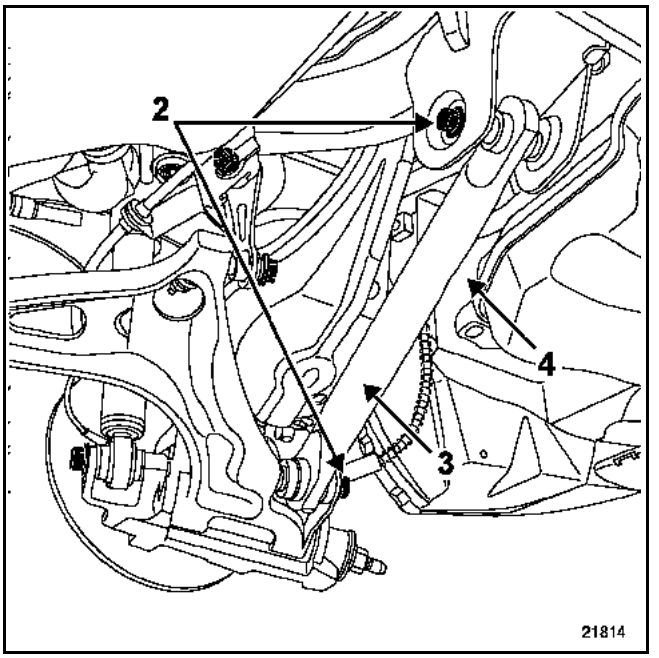

Remove:
– lower arm mounting bolts (2),
– the lower arm (3).

REFITTING

NOTE: move the arm hole (4) towards the rear.

Carry out the removal procedure in reverse.

Remove tool **Sus. 1656**.

Check the angles of the camber then the rear and front wheel alignment.

Adjustment of the rear camber requires the adjustment of the front and rear wheel alignment.

Depending on the vehicle equipment, check and adjust:
– the adaptive cruise control (refer to the relevant procedure in **Section 83D**),
– the discharge bulb headlights (refer to the relevant procedure in **Section 83C**).

GETtheMANUALS.org

SPECIAL TOOLING REQUIRED	
Sus. 1656	Spring compression tool

TIGHTENING TORQUES (in daNm)	
Wheel bolt	
M12 x 150	**11**
M14 x 150	**13**
Upper mounting nut for anti-roll bar tie rod	**6.2**
Bearing mounting bolt	**6.2**
Tie-rod mounting bolt	**6.2**
Vertical arm lower mounting bolt	**10.5**
Lower arm lower mounting bolt	**10.5**
Stub axle carrier lower mounting bolt	**23**

REMOVAL

Put the car on a two post lift.

Remove:
– the wheel,
– the anti-roll bar tie rod (1) upper nut.

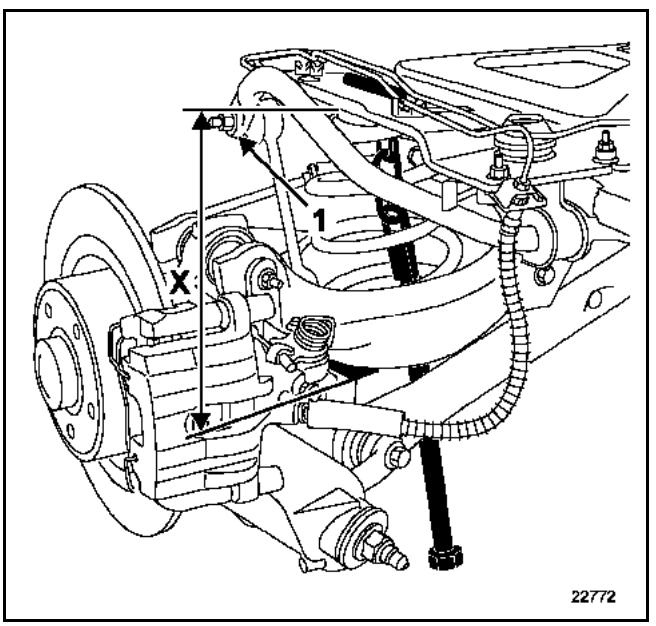

Fit tool **Sus. 1656**. Operate the tool to obtain the measurement **X = 21 cm ± 0.5 cm**.

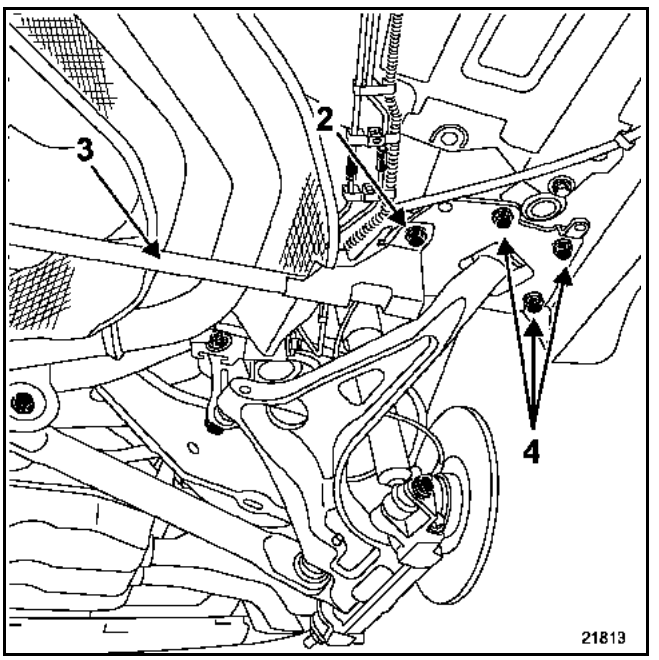

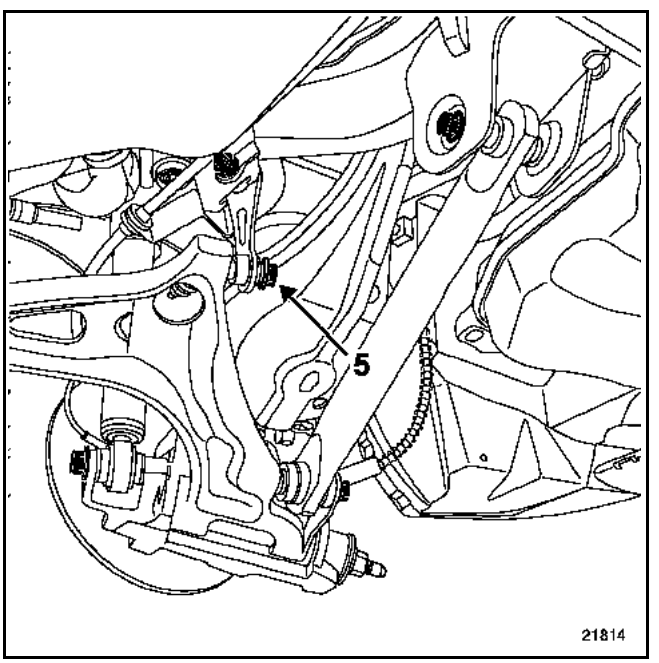

Disconnect the wheel speed sensor harness.

Remove:
– tie-rod (2) mounting bolts,
– the tie-rod (3).
– the bearing (4) mounting bolts,
– the vertical arm (5) mounting bolts.

GETtheMANUALS.org

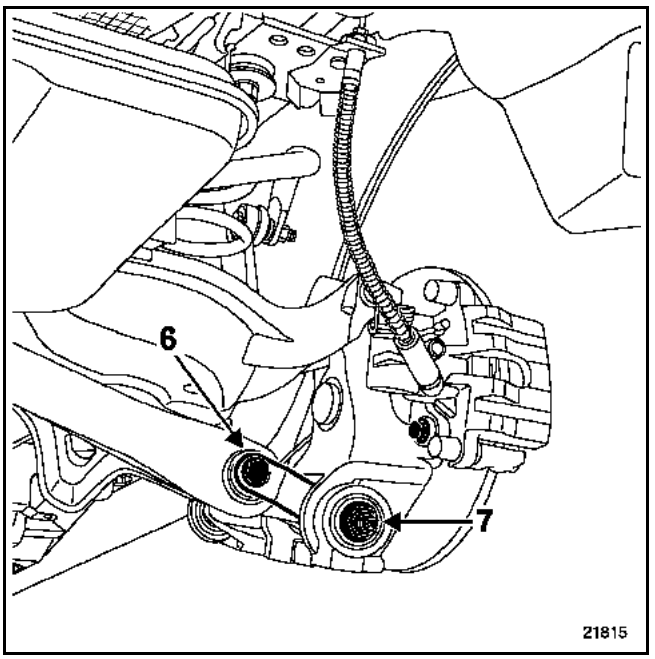

Remove:
– lower arm mounting bolts (6),
– stub axle carrier lower mounting (7); check the position of the mounting bolt,
– the longitudinal arm.

REFITTING

Refit:
– the longitudinal arm,
– the stub axle carrier lower mounting bolt,
– the lower arm mounting bolt,
– the vertical arm mounting bolt,
– the bearing mounting bolts,
– the tie-rod,
– the tie-rod mounting bolts,
– unclip the wheel speed sensor harness.

Torque tighten the mounting bolts.

Remove tool **Sus. 1656**.

Refit the anti-roll bar tie rod upper nut. Tighten to the recommended torque.

Refit the wheels.

Tighten the wheel bolts to the recommended torque.

Check the angles of the camber then the rear and front wheel alignment.

Adjustment of the rear camber requires the adjustment of the front and rear wheel alignment.

Depending on the vehicle equipment, check and adjust:
– the adaptive cruise control (refer to the relevant procedure in **Section 83D**),
– the discharge bulb headlights (refer to the relevant procedure in **Section 83C**).

GETtheMANUALS.org

SPECIAL TOOLING REQUIRED	
Sus. 1656	Spring compression tool

TIGHTENING TORQUE (in daNm)	
Longitudinal arm mounting bolt on the bearing	10.5

REMOVAL

Remove the longitudinal arm (refer to the relevant procedure).

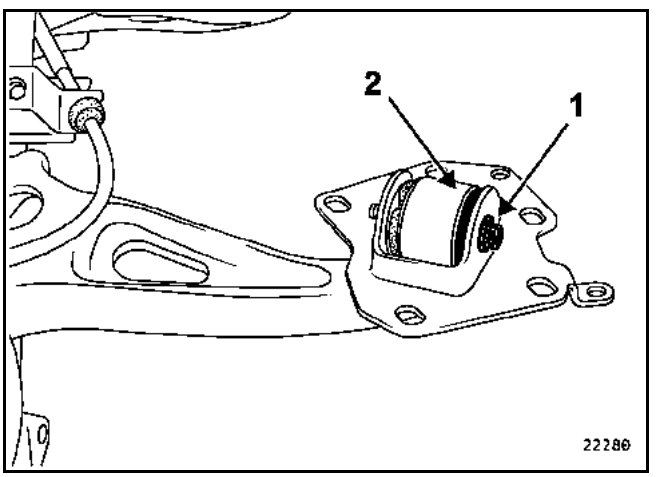

Remove:
– mounting bolt (1) noting its position,
– the bearing.

REFITTING

Check the position of the spring washer (2) and the mounting bolt.

Refit:
– the bearing,
– mounting bolt (1); tighten to the recommended torque,
– the longitudinal arm (refer to the relevant procedure).

NOTE: bolt (1) can only be fitted in one direction. It is essential to refit bolt (1) by positioning the bolt head towards the rear of the vehicle.

GETtheMANUALS.org

SPECIAL TOOLING REQUIRED	
Sus. 1656	Spring compression tool

TIGHTENING TORQUES (in daNm)	
Wheel bolt	
M12 x 150	**11**
M14 x 150	**13**
Anti-roll bar tie rod upper mounting nut	**6.2**
Stub axle carrier upper mounting bolt	**10.5**

REMOVAL

Put the car on a two post lift.

Remove:
– the wheel,
– the anti-roll bar tie rod (1) upper nut.

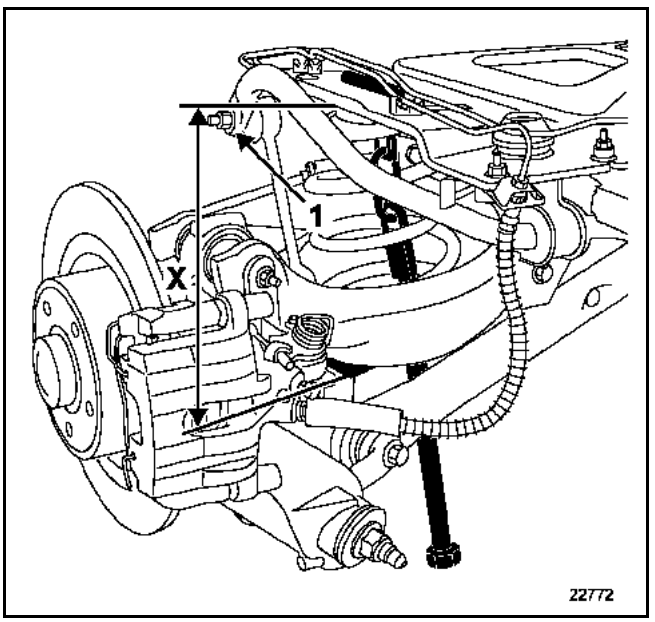

Fit tool **Sus. 1656**. Operate the tool to obtain the measurement **X = 21 cm ± 0.5 cm**.

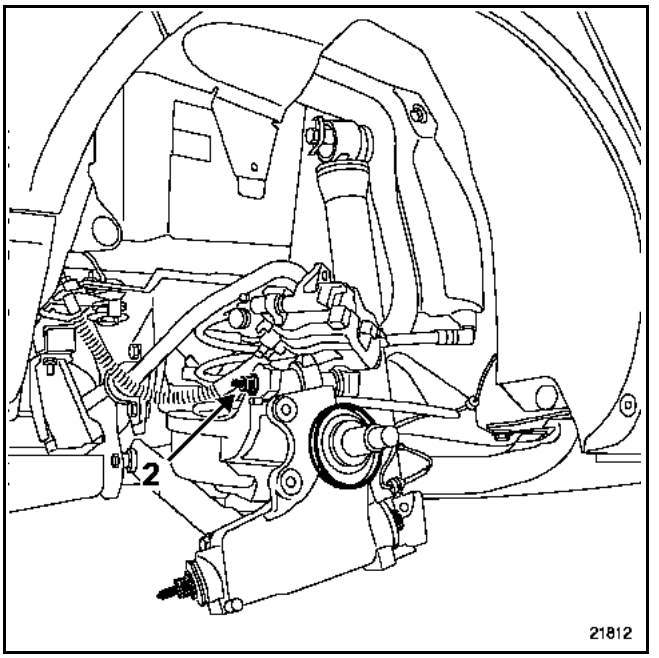

Remove the stub axle carrier (2) upper mounting bolt. Note the direction of the mounting so that it can be refitted correctly.

Turn the stub axle carrier outwards.

Remove:
– the anti-roll bar tie rod lower nut,
– the anti-roll bar tie rod.

REFITTING

Carry out the removal procedure in reverse.

Remove tool **Sus. 1656**.

Check the angles of the camber then the rear and front wheel alignment.

Adjustment of the rear camber requires the adjustment of the front and rear wheel alignment.

Depending on the vehicle equipment, check and adjust:
– the adaptive cruise control (refer to the relevant procedure in **Section 83D**),
– the discharge bulb headlights (refer to the relevant procedure in **Section 83C**).

GETtheMANUALS.org

TIGHTENING TORQUES (in daNm)	
Wheel bolt	
M12 x 150	**11**
M14 x 150	**13**
Anti-roll bar tie rod upper mounting nut	**6.2**
Anti-roll bar bearing mounting bolts	**6.2**
Exhaust pipe clip bolt	**2.5**

REMOVAL

Put the car on a two post lift.

Remove:
– the rear wheels,
– the silencer (1) (refer to the relevant method).

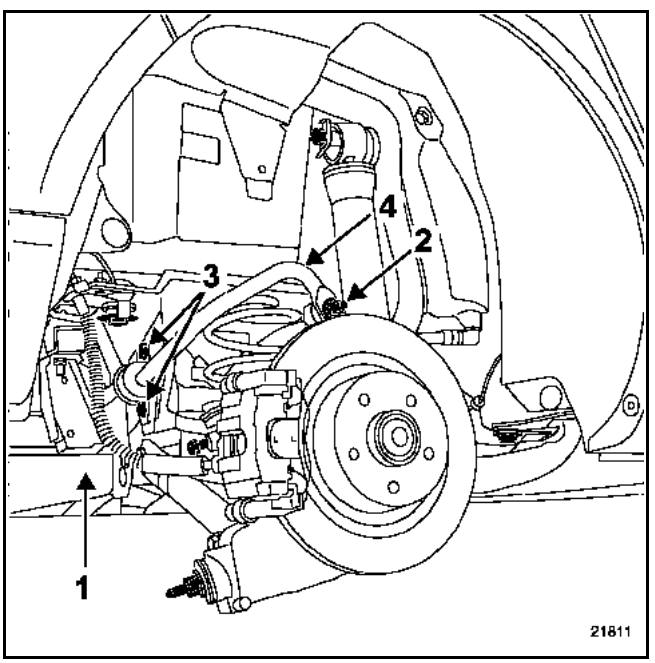

Remove:
– anti-roll bar tie rod upper mounting nuts (2),
– bearing mounting bolts (3),
– anti-roll bar (4).

REFITTING

Refit:
– the anti-roll bar,
– the bearing mounting bolts, tighten to the recommended torque,
– the anti-roll bar tie rod upper mounting nuts and tighten to the recommended torque,
– the silencer,
– the rear wheels; tighten to the recommended torque.

GETtheMANUALS.org

SPECIAL TOOLING REQUIRED	
Sus. 1656	Spring compression tool

TIGHTENING TORQUES (in daNm)	
Wheel bolt	
M12 x 150	**11**
M14 x 150	**13**
Anti-roll bar tie rod upper mounting nut	**6.2**
Shock absorber lower mounting bolt	**10.5**

REMOVAL

Put the car on a two post lift.

Remove:
– the rear wheels,
– the anti-roll bar left and right tie-rod upper mounting nuts (1).

Turn the anti-roll bar.

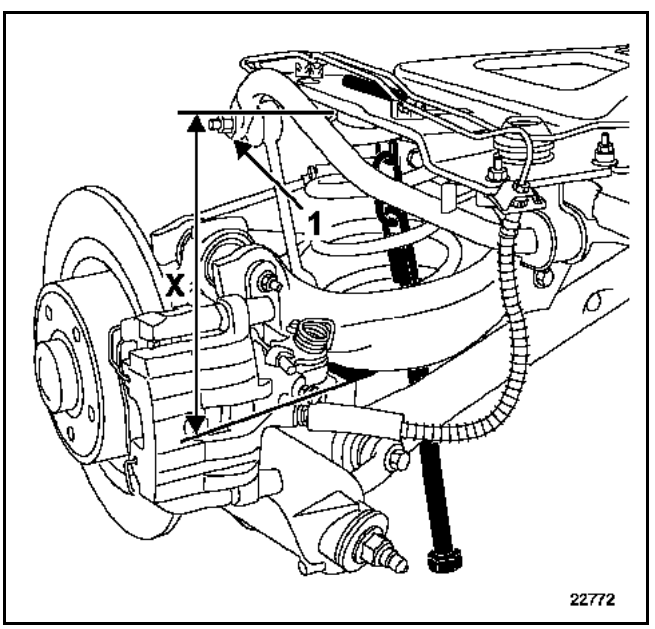

Fit tool **Sus. 1656**. Operate the tool to obtain the measurement **X = 21 cm ± 0.5 cm**.

Remove the shock absorber lower mounting bolt.

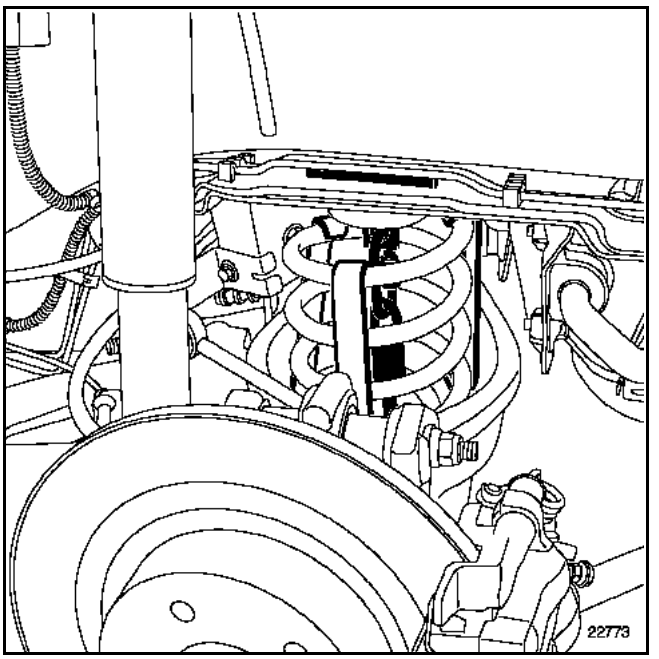

Tighten tool **Sus. 1656** to fit the three clips on the spring.

Loosen tool **Sus. 1656** to release the spring and clip assembly. Press the driveshaft and remove the spring and clip assembly.

GETtheMANUALS.org

REPLACING SPRINGS

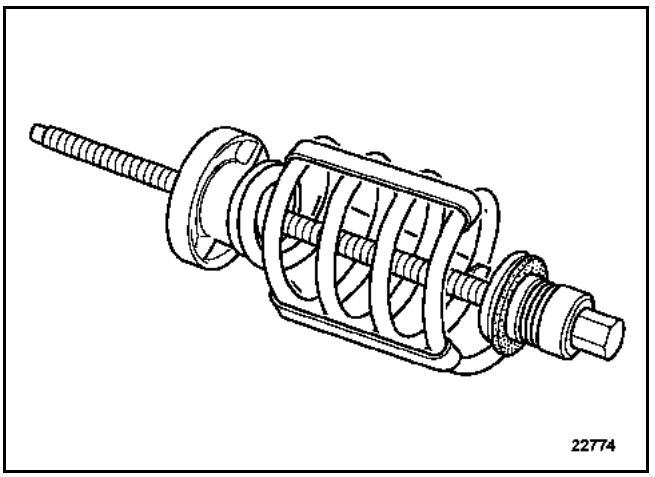

Fit tool **Sus. 1656** on the spring.

Tighten the tool to release the claws.

Loosen tool **Sus. 1656**. Replace the spring.

Fit tool **Sus. 1656** on the new spring.

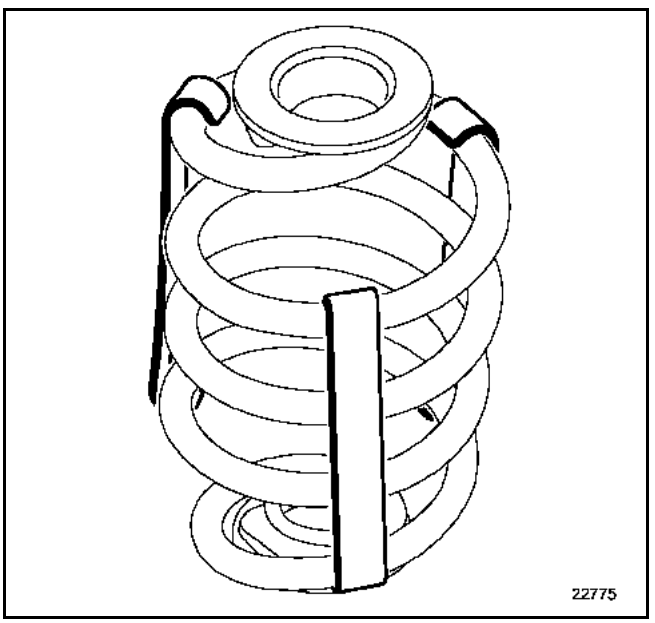

Tighten the tool to fit the claws.

Remove tool **Sus. 1656**.

REFITTING

Check the condition of the rubber washers and replace them if necessary.

Press the driveshaft and insert the spring and clip assembly.

Fit tool **Sus. 1656**. Operate the tool to release the claws.

Loosen tool **Sus. 1656** to obtain the measurement **X = 21 cm ± 0.5 cm**.

Refit the shock absorber lower bolt and tighten to the recommended torque.

Remove tool **Sus. 1656**.

Turn the anti-roll bar.

Refit:
– the anti-roll bar left and right tie-rods upper mounting nuts and tighten to the recommended torque,
– the rear wheels; tighten to the recommended torque.

GETtheMANUALS.org

SPECIAL TOOLING REQUIRED	
Sus. 1656	Spring compression tool
Mot. 1390	Component removal - refitting support

TIGHTENING TORQUES (in daNm)	
Wheel bolt	
M12 x 150	**11**
M14 x 150	**13**
Calliper support mounting bolts	**10.5**
Brake calliper mounting bolt (pillars)	**6.2**
Flexible brake pipe	**1.4**
Bearing mounting bolt	**6.2**
Tie-rod mounting bolt	**6.2**
Shock absorber mounting bolt	**10.5**
Sub-frame mounting bolt	**6.2**

REMOVAL

Put the car on a two post lift.

Secure the vehicle to the lift using safety straps (refer to **Section 02A**).

Disconnect the battery.

Fit a pedal press to limit the flow of brake fluid.

Remove the rear wheels.

Remove the silencer (refer to the relevant procedure).

Remove the heat shield.

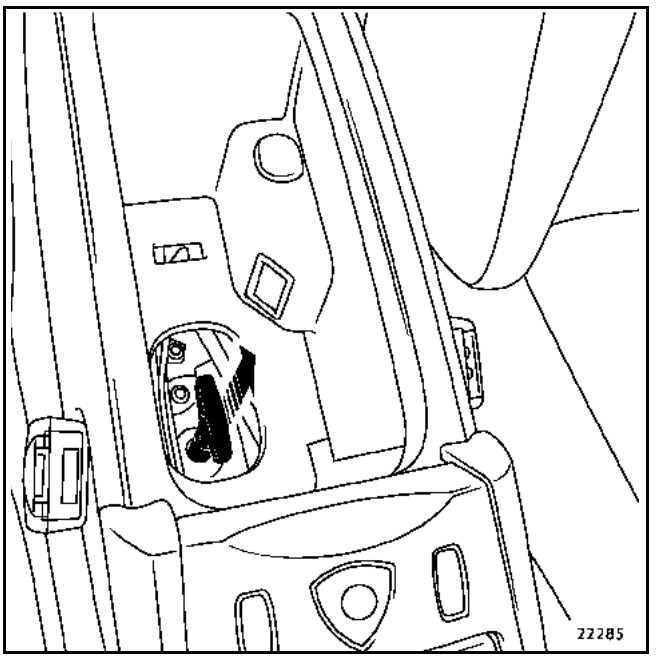

Pull the emergency handle; release the parking brake.

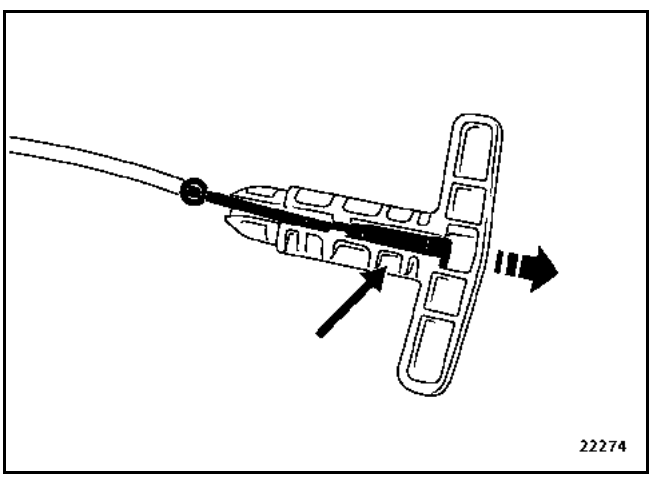

Disconnect the ring from the emergency cable.

GETtheMANUALS.org

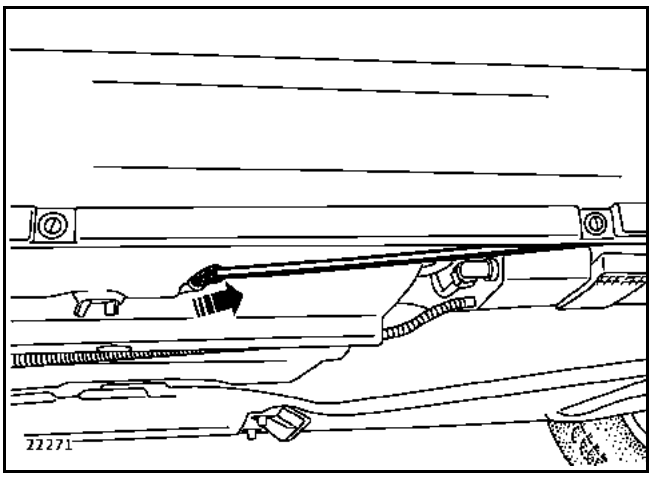

Release the emergency cable from the guide pipe.

Unclip the wheel speed sensors.

Disconnect:
– the attitude sensor (depending on equipment),
– the parking brake control unit connector,
– the hydraulic unions.

Unclip:
– the hydraulic pipes,
– the electric wiring harnesses.

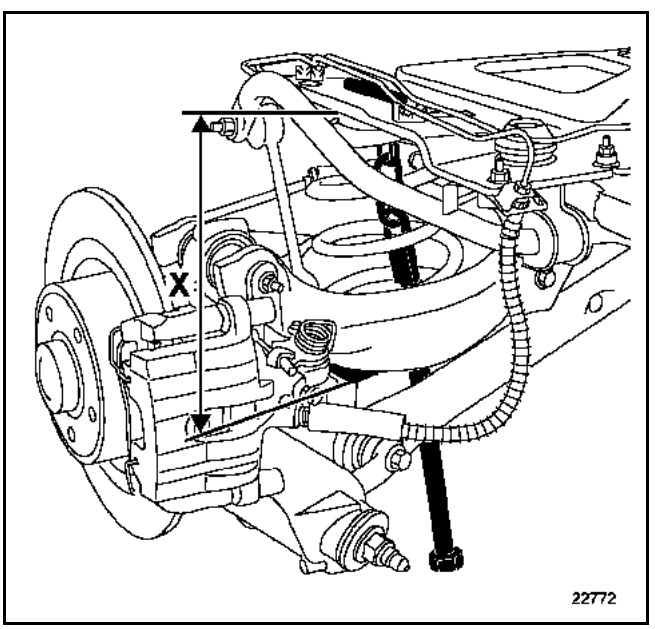

Fit tool **Sus. 1656**. Operate the tool to obtain the measurement **X = 21 cm ± 0.5 cm**.

Remove:
– the bearing mounting bolts,
– the rear tie-rod,
– the shock absorber mounting bolts,
– the shock absorbers.

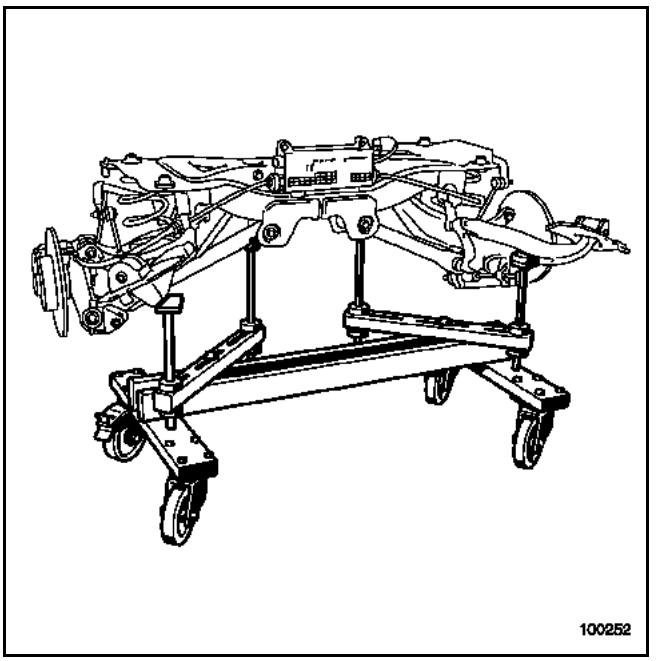

Fit **Mot. 1390** under the sub-frame.
Make sure that the axle/sub-frame assembly is fastened correctly to the tool.

Remove:
– the sub-frame mounting bolts,
– the rear axle.

GETtheMANUALS.org

REFITTING

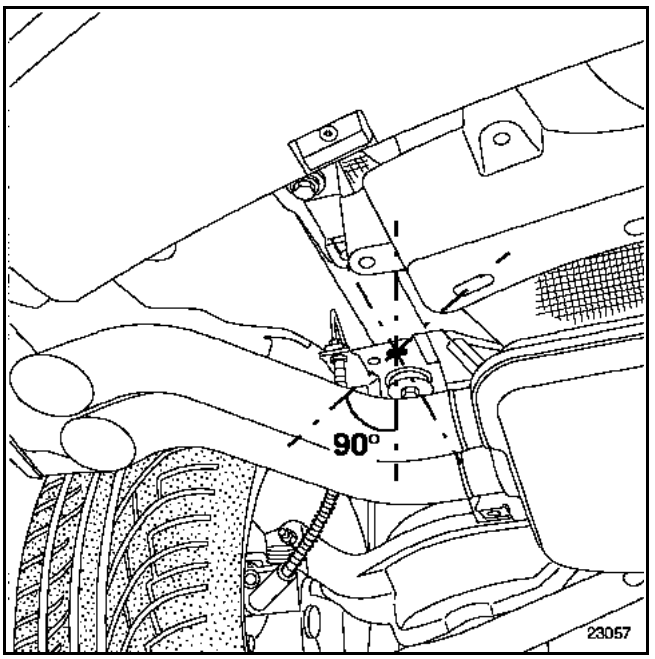

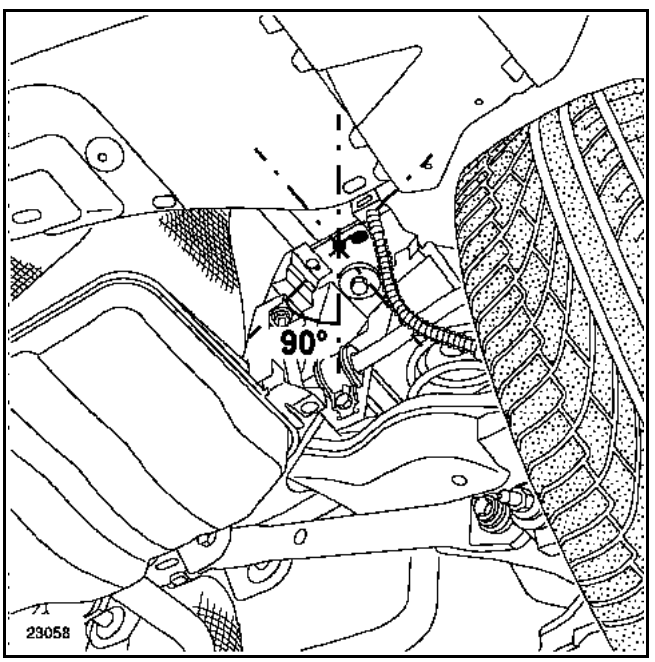

Fit the centring pins (pipe or cylinder **10.2 mm** in diameter). Position the pins at right angles to the sub-frame and the rear side members. This operation enables the correct alignment of the rear axle and the body shaft.

CAUTION: be careful not to damage the petrol vapour absorber in the fuel tank filler neck.

Refit:
– the rear axle,
– the two sub-frame mounting bolts at the rear of the sub-frame (wide washer),
– the two sub-frame mounting bolts at the front of the sub-frame (narrow washer),
– the rear tie-rod,
– the bearing mounting bolts,
– the shock absorbers,
– the shock absorber mounting bolts.

Connect:
– the attitude sensor (depending on equipment),
– the automatic parking brake control unit connector,
– the hydraulic unions.

Clip into position:
– the hydraulic pipes,
– the electric wiring harnesses.

Refit:
– the wheel speed sensors,
– the emergency cable,
– the handle,
– the heat shield,
– the silencer.

Remove tool **Sus. 1656**.

Bleed the brake circuit (refer to the relevant method).

Depress the brake pedal several times to bring the pistons into contact with the brake pads and discs. Check the brake fluid level.

GETtheMANUALS.org

Connect the battery.

Refit the wheels.

Tighten the wheel bolts to the recommended torque.

Check the angles of the camber then the rear and front wheel alignment.

Adjustment of the rear camber requires the adjustment of the front and rear wheel alignment.

Depending on the vehicle equipment, check and adjust:
– the adaptive cruise control (refer to the relevant procedure in **Section 83D**),
– the discharge bulb headlights (refer to the relevant procedure in **Section 83C**).

GETtheMANUALS.org

SPECIAL TOOLING REQUIRED	
Sus. 1656	Spring compression tool
EQUIPMENT REQUIRED	
Component jack	

TIGHTENING TORQUES (in daNm)	
Wheel bolt	
M12 x 150	**11**
M14 x 150	**13**
Brake calliper mounting bolt (pillars)	**6.2**
Anti-roll bar tie rod mounting nut	**6.2**
Stub axle carrier lower mounting bolt	**23**
Shock absorber mounting bolt	**10.5**
Stub axle carrier upper mounting bolt	**10.5**
Sub-frame mounting bolt	**6.2**
Calliper bleed screw	**0.8**
Longitudinal arm bearing mounting bolts	**6.2**
Calliper support mounting bolts	**10.5**
Brakes hydraulic union	**1.4**
Upper arm mounting bolt	**10.5**

REMOVAL

Put the car on a two post lift.

Secure the vehicle to the lift using safety straps (refer to **Section 02A**).

Remove:
- the springs (refer to the relevant procedure),
- the stub axle carrier on the same side as the upper arm being removed (refer to the relevant procedure),
- the rear tie-rod (refer to the relevant procedure),
- the anti-roll bar tie rod,
- depending on the vehicle equipment; the attitude sensor control lever,
- the upper arm mounting bolt,
- the upper arm.

REFITTING

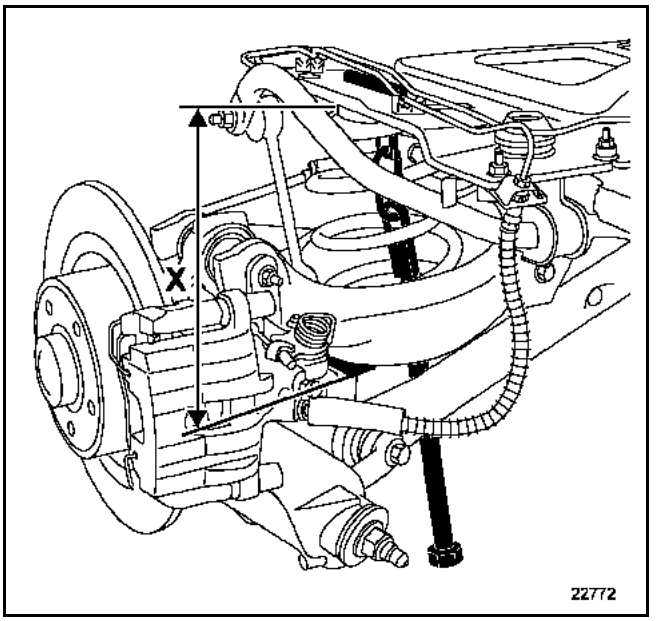

Refit the upper arm.

Fit tool **Sus. 1656** on the upper arm. Operate the tool to obtain the measurement **X = 21 cm ± 0.5 cm**.

Refit the upper arm mounting bolt to the sub-frame. Position the bolt head at the front of the sub-frame. Tighten this mounting to the recommended torque.

Refit:
- the anti-roll bar tie rod to the upper arm,
- depending on the vehicle equipment; the attitude sensor control lever,
- the rear tie-rod (refer to the relevant procedure),
- the stub axle carrier on the same side as the upper arm being removed (refer to the relevant procedure),
- the springs (refer to the relevant procedure).

GETtheMANUALS.org

Remove tool **Sus. 1656**.

Bleed the brake circuit (refer to the relevant method).

Depress the brake pedal several times to bring the pistons into contact with the brake pads and discs. Check the brake fluid level.

Connect the battery.

Refit the wheels.

Tighten the wheel bolts to the recommended torque.

Check the angles of the camber then the rear and front wheel alignment.

Adjustment of the rear camber requires the adjustment of the front and rear wheel alignment.

Depending on the vehicle equipment, check and adjust:
– the adaptive cruise control (refer to the relevant procedure in **Section 83D**),
– the discharge bulb headlights (refer to the relevant procedure in **Section 83C**).

GETtheMANUALS.org

SPECIAL TOOLING REQUIRED	
Sus. 1656	Spring compression tool
EQUIPMENT REQUIRED	
Component jack	

TIGHTENING TORQUES (in daNm)	
Wheel bolt	
M12 x 150	**11**
M14 x 150	**13**
Brake calliper mounting bolt (pillars)	**6.2**
Anti-roll bar tie rod mounting nut	**6.2**
Stub axle carrier lower mounting bolt	**23**
Shock absorber mounting bolt	**10.5**
Stub axle carrier upper mounting bolt	**10.5**
Sub-frame mounting bolt	**6.2**
Anti-roll bar bearing mounting bolts	**6.2**
Calliper bleed screw	**0.8**
Longitudinal arm bearing mounting bolts	**6.2**
Lower arm upper mounting bolt	**10.5**
Vertical arm upper mounting bolt	**6.2**
Brakes hydraulic union	**1.4**
Lower arm upper mounting bolt	**10.5**
Upper arm mounting bolt	**10.5**

REMOVAL

Put the car on a two post lift.

Secure the vehicle to the lift using safety straps (refer to **Section 02A**).

Remove:
- the springs (refer to the relevant procedure),
- depending on the vehicle equipment; the attitude sensor tie-rod,
- the stub axle carriers (refer to the relevant procedure),
- the rear tie-rod (refer to the relevant procedure),
- the anti-roll bar,
- the bolts mounting the lower arm on the sub-frame,
- the bolts mounting the vertical arm on the sub-frame,
- the lower and vertical arms,
- the upper arm mounting bolts,
- the upper arms,
- the automatic parking brake control unit.

GETtheMANUALS.org

REFITTING

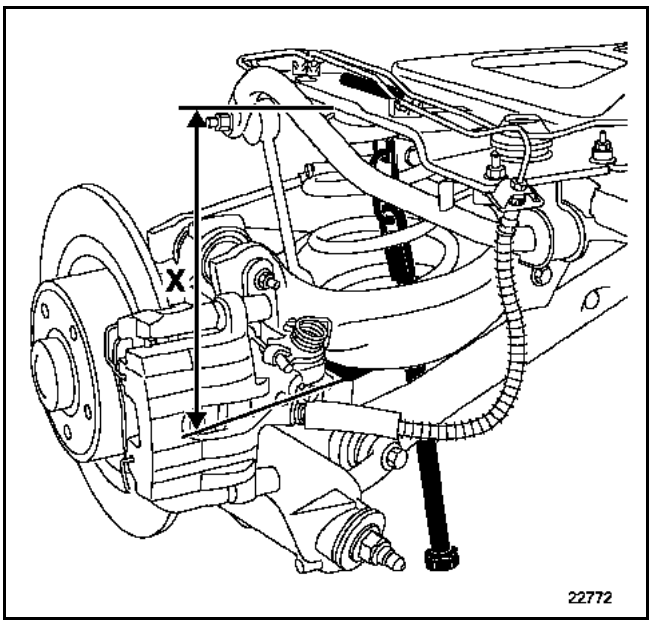

Refitting can be carried out on each driveshaft in turn or on parts with the same designation on each driveshaft. Fit tool **Sus. 1656** on the driveshaft on which the supports are tightened to the recommended torque. Operate the tool to obtain the measurement **X = 21 cm ± 0.5 cm**. Repeat this operation as many times as necessary.

Refit the upper arms.

Refit the upper arm mounting bolts to the sub-frame. Position the bolt head at the front of the sub-frame. Tighten the mountings to the recommended torque.

Refit:
– the lower and vertical arms,
– the bolts mounting the vertical arm on the sub-frame,
– the bolts mounting the lower arm on the sub-frame,
– the anti-roll bar,
– the rear axle (refer to the relevant procedure),
– the stub axle carriers (refer to the relevant procedure),
– depending on the vehicle equipment; the attitude sensor tie-rod,
– the springs (refer to the relevant procedure),
– the automatic parking brake control unit.

Remove tool **Sus. 1656**.

Bleed the brake circuit (refer to the relevant method).

Depress the brake pedal several times to bring the pistons into contact with the brake pads and discs. Check the brake fluid level.

Connect the battery.

Refit the wheels.

Tighten the wheel bolts to the recommended torque.

Check the angles of the camber then the rear and front wheel alignment.

Adjustment of the rear camber requires the adjustment of the front and rear wheel alignment.

Depending on the vehicle equipment, check and adjust:
– the adaptive cruise control (refer to the relevant procedure in **Section 83D**),
– the discharge bulb headlights (refer to the relevant procedure in **Section 83C**).

GETtheMANUALS.org

WHEEL RIMS

There are two types of wheel identification marking:

- Engraved markings for steel rims.
- Cast marking for alloy rims.

The marking gives the main dimensional specifications of the wheel rim.

The marking may be complete:

Example: 5 1/2 J 14 4 CH 36

or in abbreviated form:

Example: 5 1/2 J 14

	A	B	C	D	E	F
RIM TYPE	**WIDTH (in inches)**	**RIM EDGE PROFILE**	**Ø NOMINAL (in inches) under tyre bead**	**Circle diameter where holes are located**	**Tyre bead profile**	**Offset in mm**
5 1/2 J 14 4 CH 36	**5 1/2**	**J**	**14**	**4**	**CH**	**36**

Maximum run-out: measured at the rim edge (at G).

The wheel bolts are **108 mm** in diameter

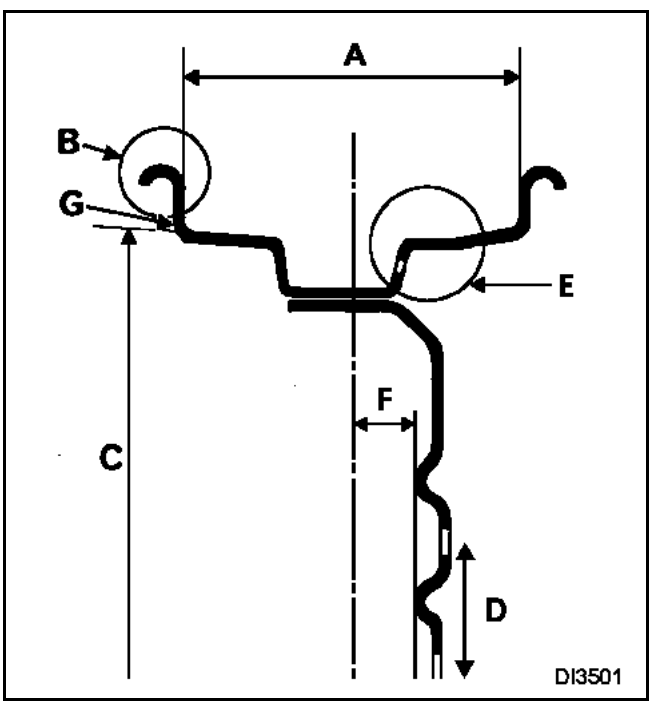

GETtheMANUALS.org

TYRES

The identification marking can be in two forms for the same type of tyre.

Example:

185	/	70	H	R	14	
①		②	③	④	⑤	
185	/	70	R	14	88	H
①		②	④	⑤	⑥	③

① Tyre width in mm **(l)**
② Ratio **h/l**
③ Speed suffix
④ Structure suffix
⑤ Wheel rim diameter in inches
⑥ Load index

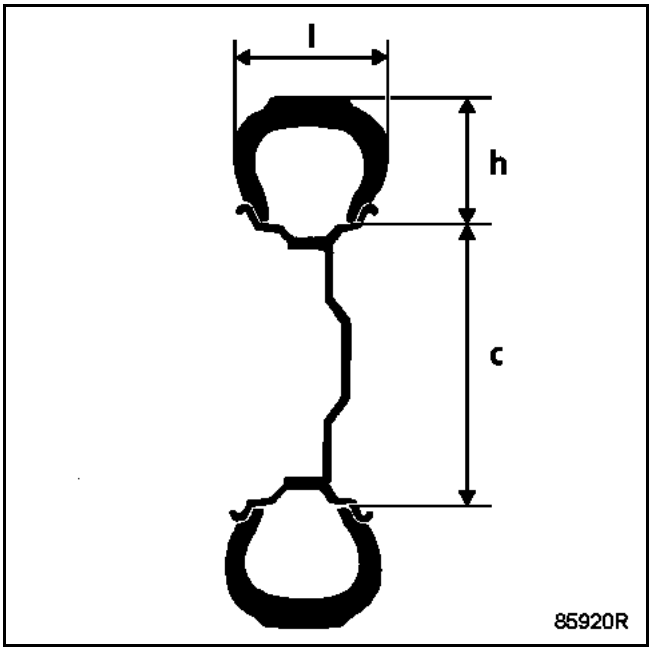

Example of a structure suffix:

SUFFIX	STRUCTURE
None.	CROSS PLY
R	RADIAL
B	BIAS BELTED

Example of a speed suffix:

SUFFIX	MAXIMUM SPEED
R	170
S	180
T	190
U	200
H	210
V	240
Z	MORE THAN 240

GETtheMANUALS.org

Engine type	Rim	Tyres	Tyre pressure when cold (in bar) (1)	
			Front	Rear
F4R	J 7 17	225/55 R 17	**2.2**	**2.0**
F4R	7.5 J 8	245/45 R 18	**2.2**	**2.0**
V4Y	J 7 17	225/55 R 17	**2.5**	**2.0**
V4Y	7.5 J 18	245/45 R 18	**2.6**	**2.0**
G9T	J 7 17	225/55 R 17	**2.3**	**2.0**
G9T	7.5 J 18	245/45 R 18	**2.4**	**2.0**
P9X	J 7 17	225/55 R 17	**2.4**	**2.0**
P9X	7.5 J 18	245/45 R 18	**2.5**	**2.0**

(1) Under full load and/or on motorway.

Tightening torque for the wheel nuts: **10.5 daNm**

Rim run-out: **1.2 mm**

Tyre pressures must be checked when cold. The increase in temperature during driving increases the pressure by **0.2** to **0.3 bar**.

If the pressure is checked when the tyres are warm, take this increase into account and **never deflate the tyres.**

Special features of vehicles fitted with the tyre pressure monitoring system

Each set of four tyres is programmed by computer.

When the winter tyres or wheels are being fitted, and the programming has already been carried out, you only need to change to winter mode using the diagnostic toolSimilarly, when the summer tyres or wheels are being fitted, you need to change to summer mode using the diagnostic tool

GETtheMANUALS.org

BALANCE WEIGHTS

Only use weights supplied by the Parts Department:
- secured to the metal rims by hooks (hooks incorporated in the weight),
- fixed using hooks (flat) or self-adhesive for alloy wheel rims.

A Steel rim
B Aluminium alloy

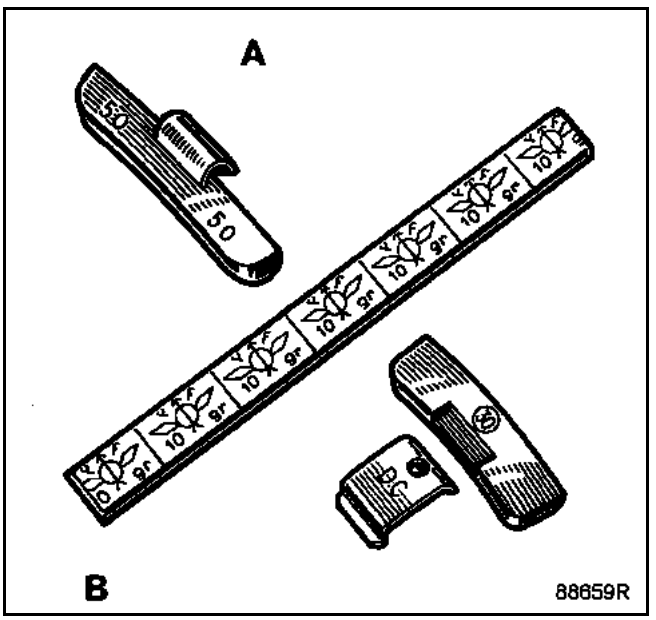

GETtheMANUALS.org

This system constantly monitors the pressure of the vehicle's four tyres (the spare wheel is not monitored). It warns the driver when:

- the pressure is 0.3 bar **below the recommended pressure (orange warning) or 0.6 bar below (red warning)**,
- the pressure is too high,
- a tyre is not running normally,
- there is a difference in pressure between the left and right side tyres.

In operation, the system uses:

– four pressure sensors (incorporating the inflation valve), one in each of the vehicle's wheels,
– a radio frequency signal transmitter located under the vehicle,
– a computer,
– a display which indicates the tyre concerned.It also displays the pressure values each time the engine is started and in the event of an emergency.

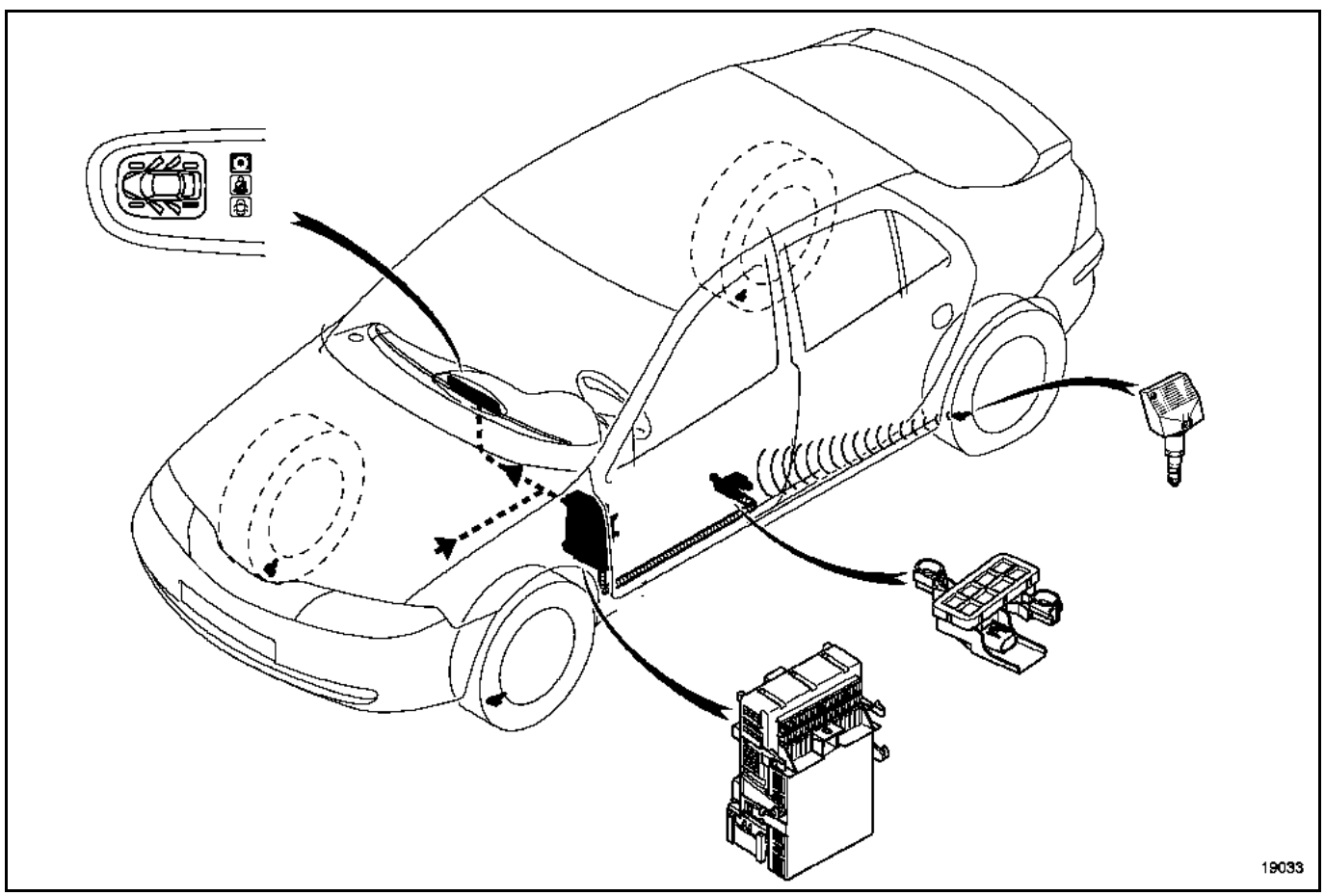

GETtheMANUALS.org

IMPORTANT
Each sensor is identified by a coloured marking round the valve:
– green = front left,
– yellow = front right,
– red = rear left,
– black = rear right.

IMPORTANT: these colour codes must be strictly observed so that the correct information can be read on the display. Each sensor has its own computer code.

GETtheMANUALS.org

The sensors regularly measure the tyres' internal pressure. They transmit their identification code and the pressure signal to the transmitter using radio frequency waves.

The pressure sensor consists of:
– a conventional valve,
– a non-removable battery,
– a pressure measuring tool,
– a radio frequency transmitter (on each wheel).

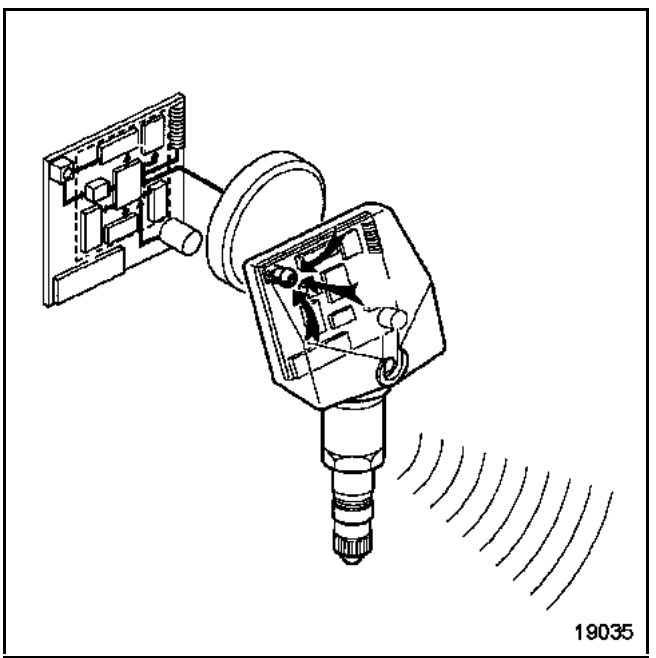

IMPORTANT:
When removing, do not swap the wheels.
In the event of the valves being removed, program the code (which corresponds to the position of the sensors), using the diagnostic tool and valve exciter **MS.1607**. Refer to the Repair Method in **FAULT FINDING section 35B on programming sensors.**

NOTE: a second set of pressure sensors can be identified by the computer

GETtheMANUALS.org

REMOVAL

Detaching the outer bead from the tyre

When removing the wheel rim bead always begin on the opposite side to the valve.Make sure that the tyre bead does not pull on the sensor at any time.

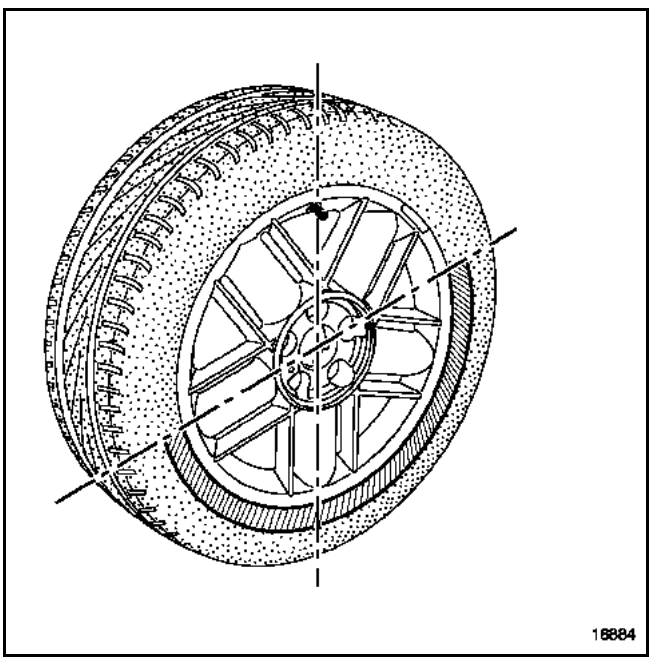

Detaching the bead from inside the tyre

Detaching the bead from the inside is not too difficult. But, it is important that the outer tyre bead does not pull on the sensor.

Detaching the outer tyre bead

Position the tyre lever approximately **15 cm** from the valve. Remove the bead finishing at the valve.It is important that the tyre bead does not pull on the sensor.

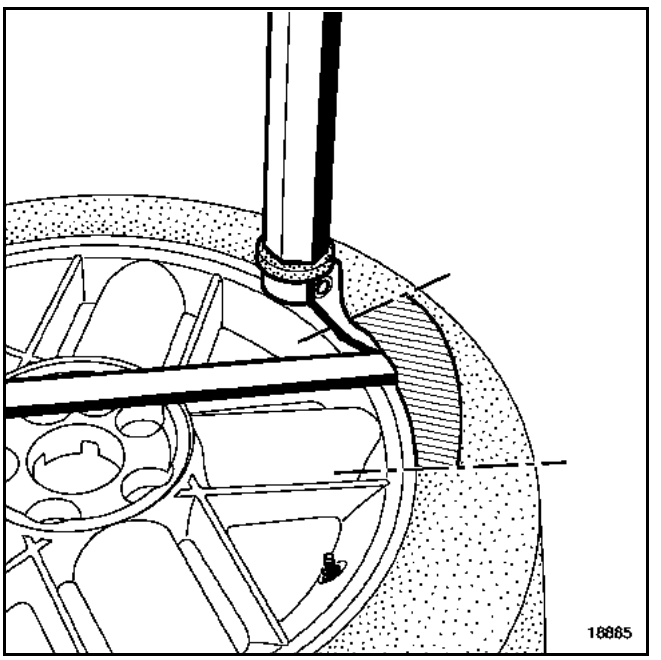

GETtheMANUALS.org

Detaching the inner tyre bead

This method is exactly the same as the method for removing the outer bead described in the preceding paragraph

REPLACEMENT

The following parts must be replaced:
– seal (1),
– mechanism (2),
– cap (3).

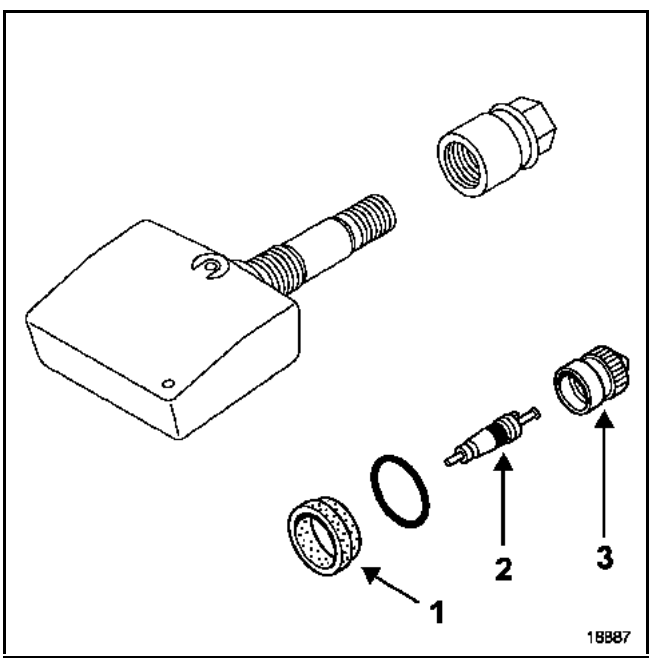

REFITTING

TIGHTENING TORQUE (in Nm)	
Pressure sensor nut	**6.5**

Clean the tyre beads.

Position the inner bead approximately **15 cm** away from the valve. Refit the tyre finishing at the valve. Make sure that the tyre bead does not pull on the sensor at any time.

Fit the outer bead using the same method.Inflate the tyre to the recommended pressure.

NOTE:
The pressure gauge should be correctly calibrated
The gauge inaccuracy should be less than 0.1 bar.

GETtheMANUALS.org

OPERATION

The transmitter is located underneath the vehicle. It receives signals from the tyre pressure sensors.

It transmits them to the computer

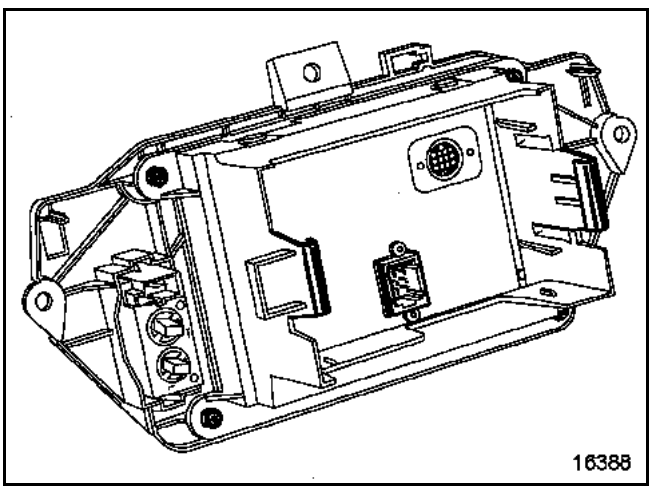

CONNECTION

TRACK	Description
1	Computer connection
2	Not used
3	Earth
4	+ Before ignition

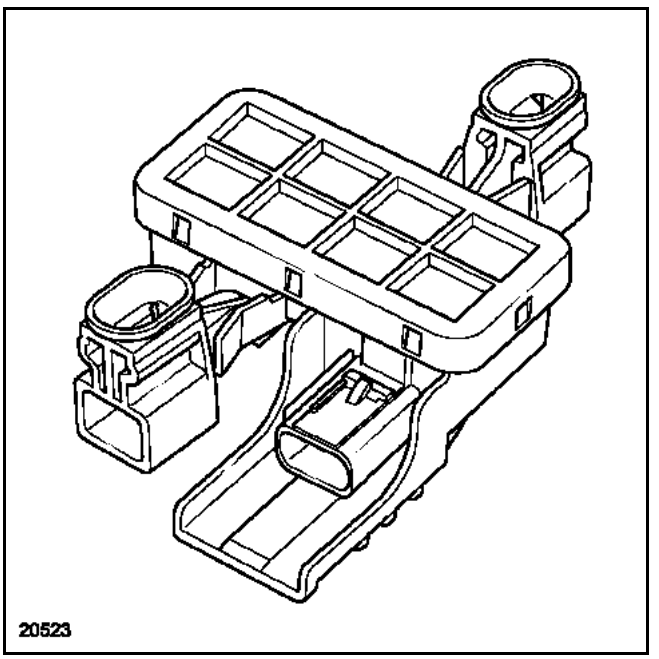

REMOVAL

Pull out the two transmitter clips.

Disconnect the connector.

REFITTING

To refit, proceed in the reverse order of removal.

GETtheMANUALS.org

CONNECTION

TRACK	Description
1	+ Battery
2	Earth
3	+ After ignition
4	Door and window signals
5	Instrument panel tyre pressure monitor warning light
6	Instrument panel SERVICE warning light
7	STOP warning light
8	Not in use
9	CAN H display
10	Earth
11	CAN L display
12	Fault finding (line K)
13	Under body receiver
14	Not in use

REMOVAL

Lift the rear bench seat.

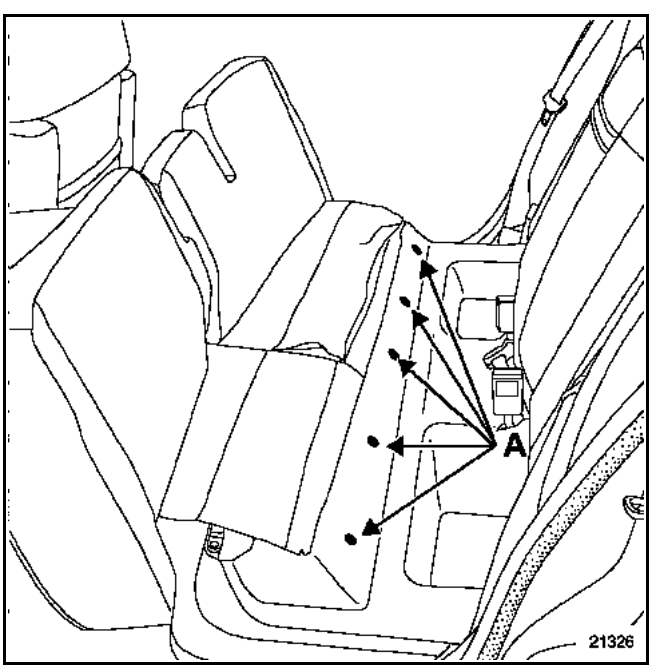

Remove clips (A). Lift up the carpet.

Disconnect the computer connector.

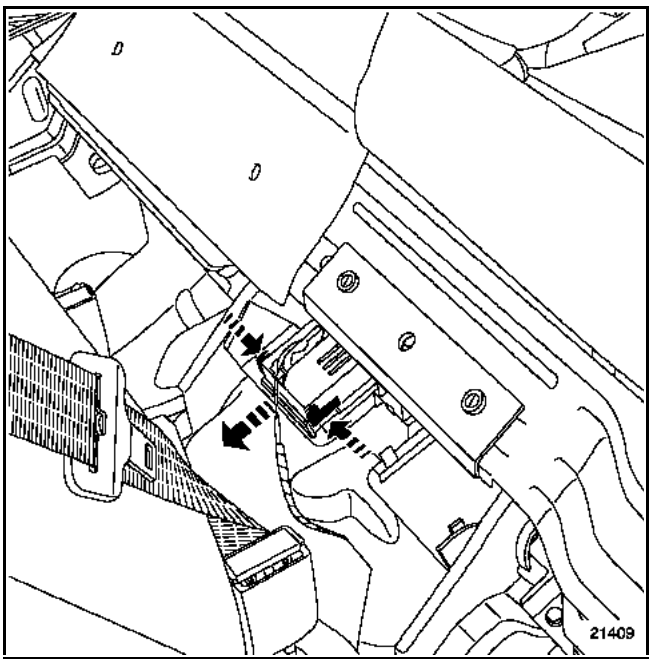

Remove:
– the computer mounting,
– the computer.

Pull out the computer.

REFITTING

To refit, proceed in the reverse order of removal.

When replacing the computer, programme the code (which corresponds to the position of the sensors) using the diagnostic tool and valve exciter **MS.1607**. Refer to the repair method in **FAULT FINDING section 35B, Programming the sensors**.

GETtheMANUALS.org

The display function is located on the instrument panel.

The display indicates:
– -the tyre concerned,
– -the tyre pressure values each time the car is started.

REMOVAL

Disconnect the battery.

Using a stiff spatula, remove:
– -the upper instrument panel trim clipped onto the dashboard,

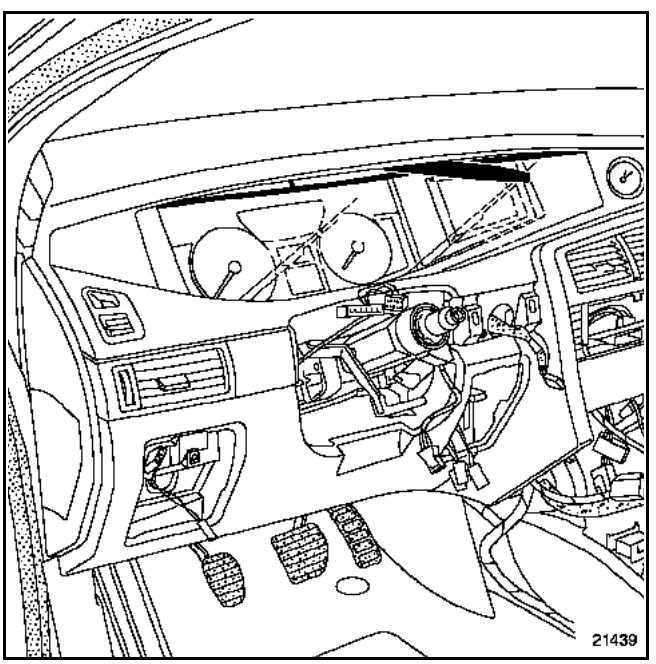

– -the lower instrument panel trim clipped onto the dashboard,

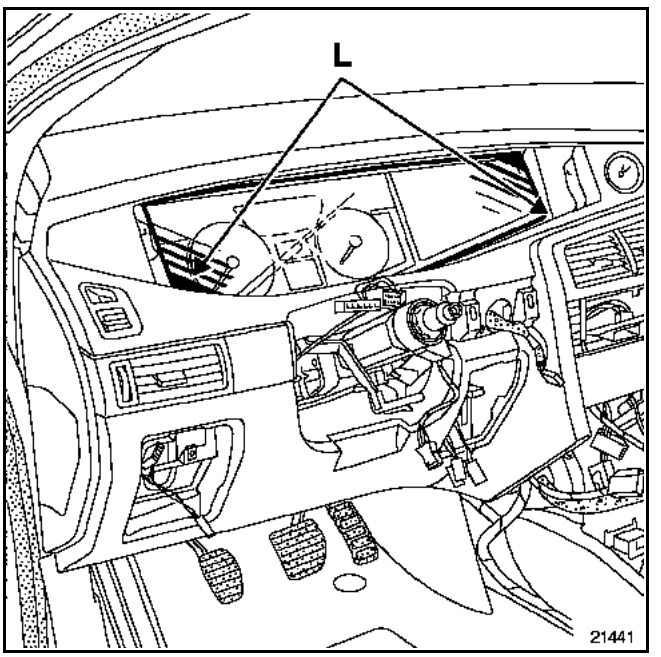

– screws (L).

GETtheMANUALS.org

CONNECTION

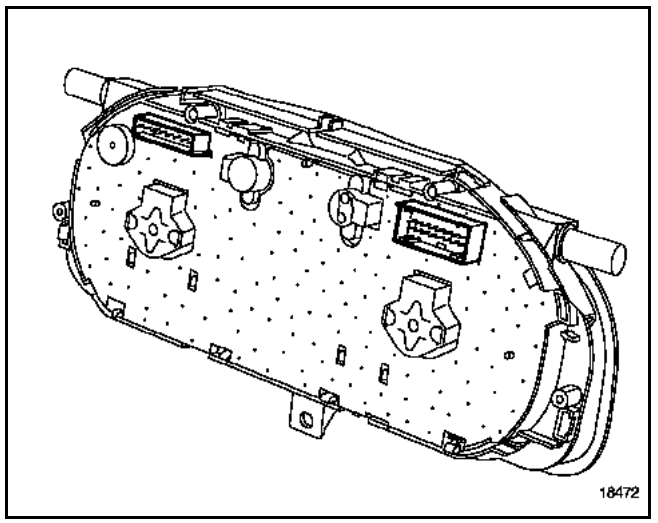

Red 15 track connector

TRACK	Description
1	Door and window signals
2	Secrecy button
3	Not in use
4	Not in use
5	Lighting dimmer
6	ADAC scroll button
7	Not in use
8	Voice synthesiser (multiplex)
9	Not in use
10	Multiplexing
11	Multiplexing
12	Fault finding line
13	Voice synthesiser (multiplex)
14	Not in use
15	Not in use

30 track grey connector

TRACK	Description
1	Door open contact warning light switch
2	Right indicator light
3	Left indicator light
4	+ Before ignition
5	Immobiliser warning light
6	Seat belt warning light
7	Not in use
8	Dipped headlight indicator
9	Main beam headlight indicator light
10	Not in use
11	Rear fog light indicator light
12	Front fog light indicator light
13	Washer fluid level warning light
14	Battery charge warning light
15	Heated seat indicator light
16	+ After ignition
17	Not in use
18	Oil pressure warning light
19	Bonnet signal
20	Not used (trailer)
21	Oil level sensor
22	Fuel level gauge indicator light
23	Not in use
24	Earth
25	Fuel level gauge earth
26	Oil level sensor earth
27	Side light indicator light
28	Secrecy button
29	Parking brake indicator light
30	Braking light

GETtheMANUALS.org

SPECIAL TOOLING
MS.1607 exciter valve tool

When replacing:
– a sensor, obtain the sensor code and position from the computer
– a computer, obtain the respective sensor codes and positions from the computer and the recommended tyre pressures using the diagnostic tool and the exciter valve tool **MS.1607**.

Refer to the Repair Method in **FAULT FINDING** or **section 35B Programming the sensors**.

GETtheMANUALS.org

The axial ball joint is replaced with the steering box in position on the vehicle. With tool **Dir. 1305**, the axial ball joints can be loosened via the wheel arch.

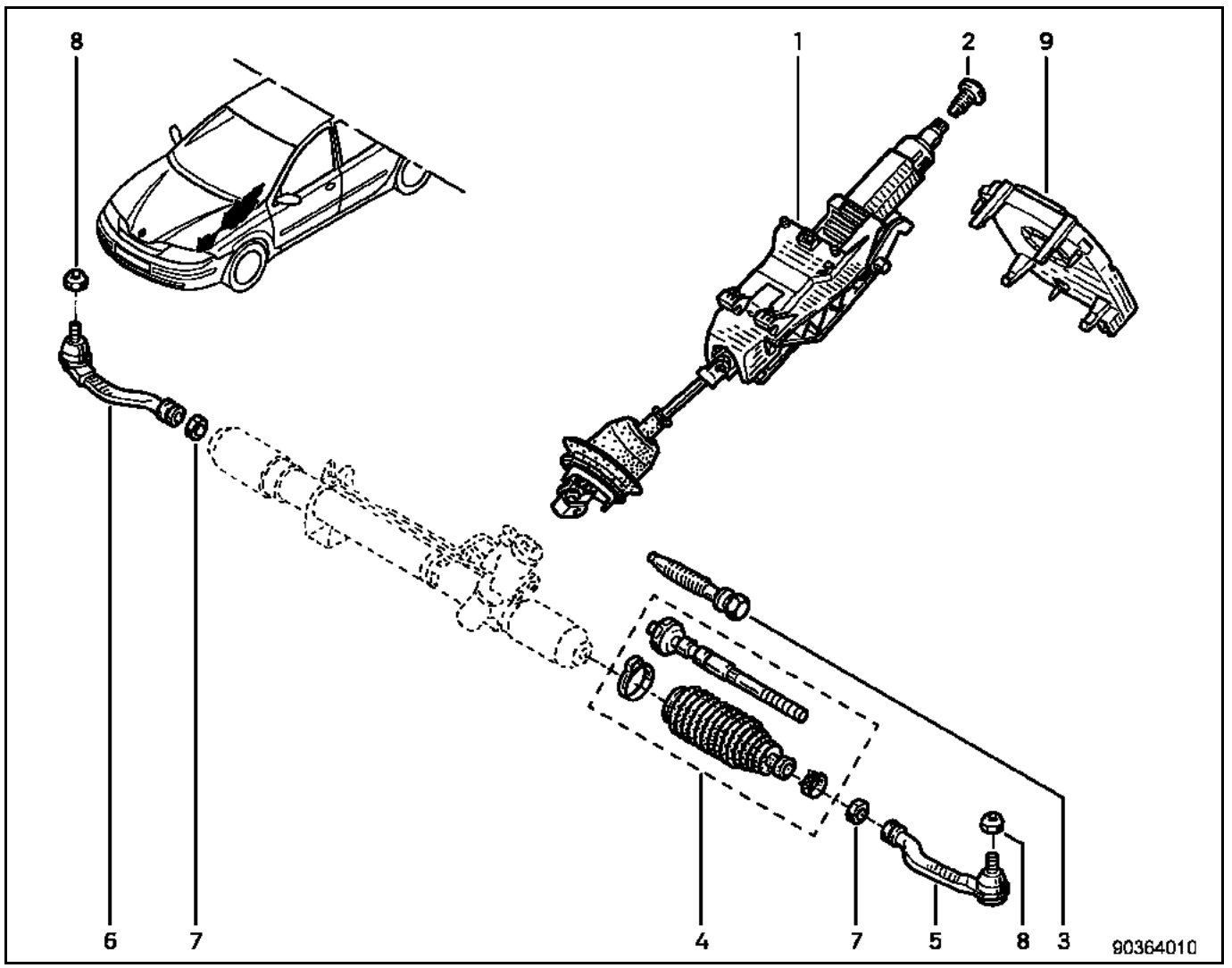

GETtheMANUALS.org

SPECIAL TOOLING REQUIRED		
Dir.	1305-01	Axial ball joint removal/refitting tool
Dir.	1306-02	SMI steering rack support tool
T. Av.	476	Ball joint extractor

TIGHTENING TORQUES (in daNm)	
Wheel bolt	11
Steering ball joint nut	3.7
Wheel alignment adjustment sleeve bolt	2
Axial ball joint	5

Put the vehicle on a two-post lift.

REMOVAL

Disconnect the track rod end using tool **T. Av. 476.**

Loosen the bolt on the wheel alignment sleeve. Hold the axial ball joint with an open wrench. Loosen the steering ball joint.

Make a mark or count the number of turns of thread taken up so that the wheel alignment can be readjusted on refitting.

Withdraw the metal collars clamping the gaiter. Remove the gaiter.

Turn the wheels so the rack teeth are freed on the valve side.

Fit tool **Dir. 1306-02**.

In this position, release the axial ball joint using tool **Dir. 1305-01**.

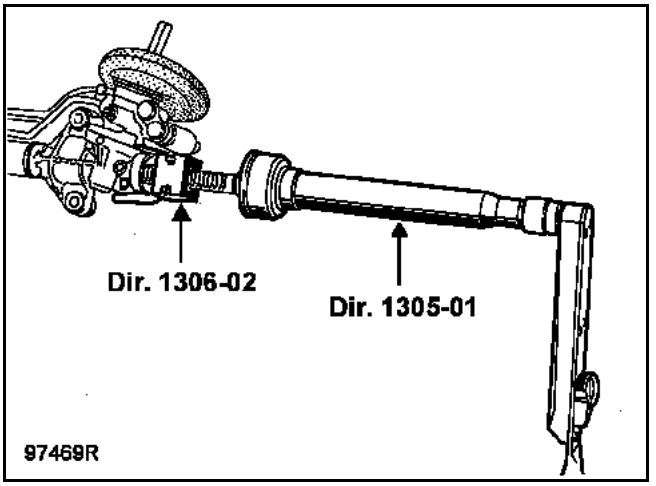

GETtheMANUALS.org

REFITTING

NOTE: Before refitting the new tie-rods, pass a **12 x 100 mm** tap over the threads at the ends of the steering rack in order to remove any trace of **LOCTITE** from the original fitting and so prevent seizure of the threaded sections on refitting. Always replace them all (2). If the ball joint notch (1) is not warn, it can be reused.

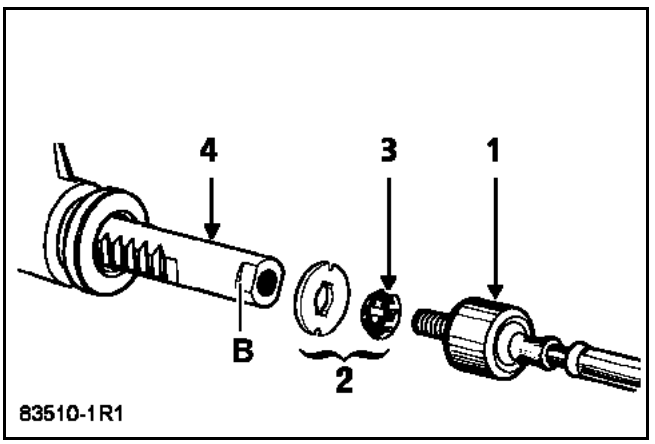

Refit the following to rack (4):
– stop washer (2),
– the stop (3),
– the axial ball joint (1) whose threads have been coated with **LOCTITE FRENBLOC**.

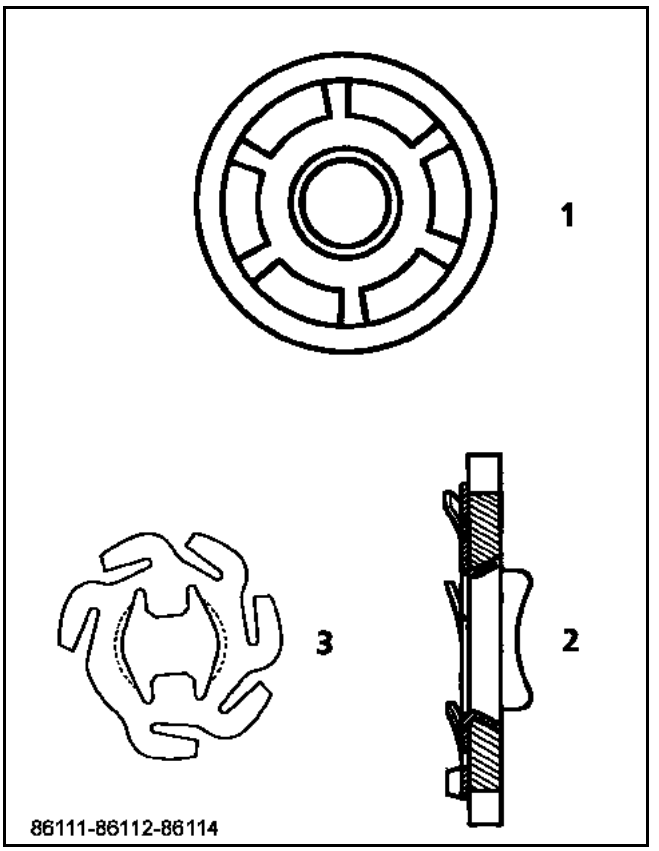

Check that the tabs of locking washer (2) correctly coincide with the flat surfaces (B) of the steering rack. Definitively tighten the axial ball joint using tool **Dir. 1305.**

Refit the gaiter back with new clips. Retighten the ball joint housing by the same number of turns used when removing it.

Connect the ball joint.

Check and adjust wheel alignment.

Tighten the bolt on the wheel alignment sleeve to the tightening torque.

GETtheMANUALS.org

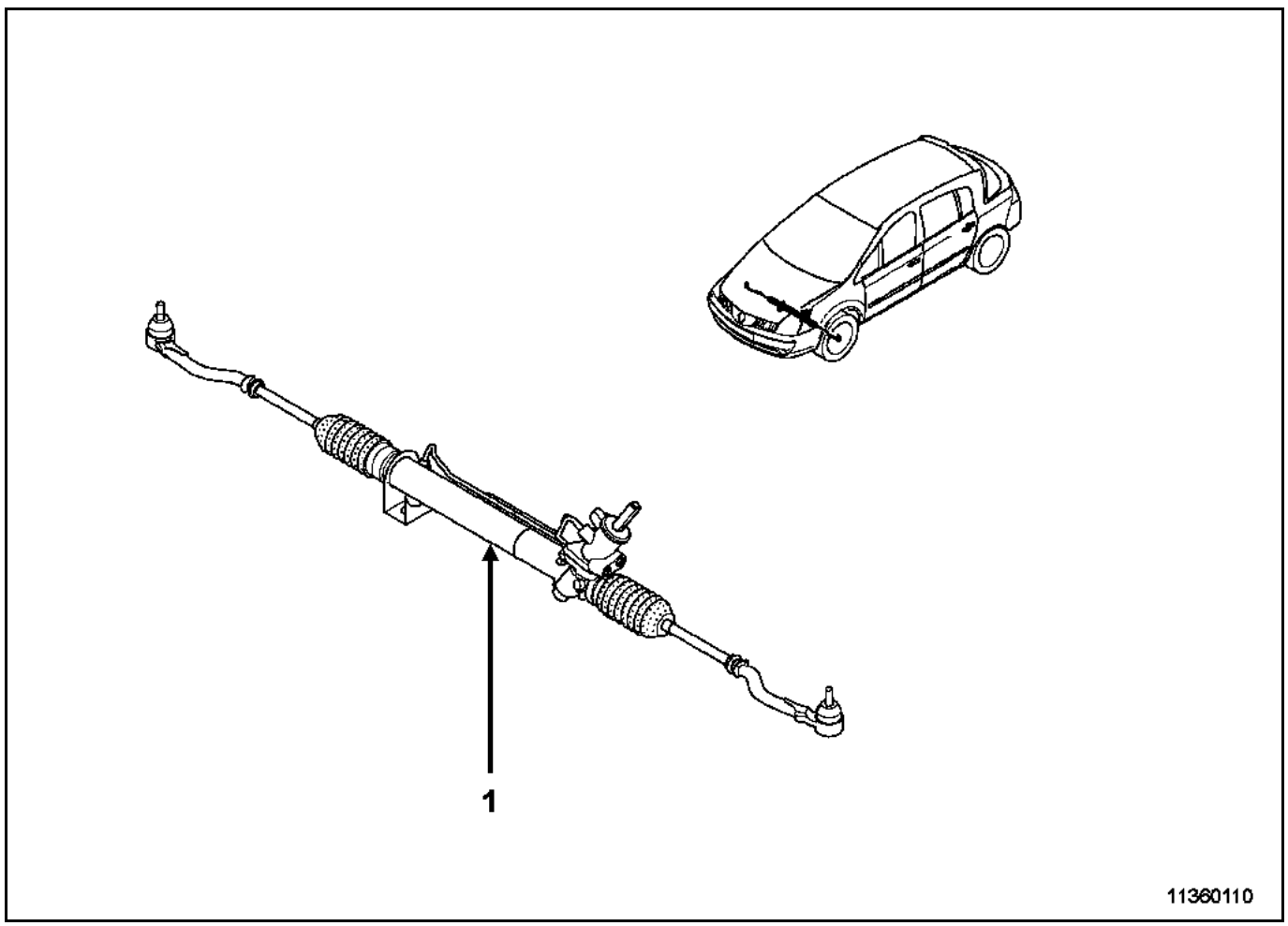

GETtheMANUALS.org

SPECIAL TOOLING REQUIRED	
Mot. 453-01	Set of 2 hose clamps for general use
T. Av. 476	Ball joint extractor
EQUIPMENT REQUIRED	
Hydraulic jack	

TIGHTENING TORQUES (in daNm)	
Steering rack bolt	18
Mounting bolt on power assisted steering pipe	4
Heat shield bolt	2
Front tie-rod bolt	6.2
Sub-frame bolt	10.5
Acoustic tie-rod bolt	2.1
Stabiliser bar return tie-rod nut	4.4
Steering ball joint nut	3.7
Mounting of engine tie-bar to sub-frame	10.5
Aluminium side member bolt	4.4
LH and RH tie-rod bolt	4.4
Steering shaft yoke bolt	2.1
Wheel bolt	11

IMPORTANT: After removing the sub-frame bolts, the steering rack bolts and the steering shaft yoke bolts and nuts, it is essential to replace them and tighten them to the recommended torque.

REMOVAL

Put the vehicle on a two-post lift.

Disconnect the battery.

Remove:
– the engine undertray,
– the lower mountings of the bumpers;
– the wheels.

Fit a steering wheel immobiliser.

Remove:
– the front mudguards,
– the left-hand tie-rod bolts,
– the right-hand tie-rod,

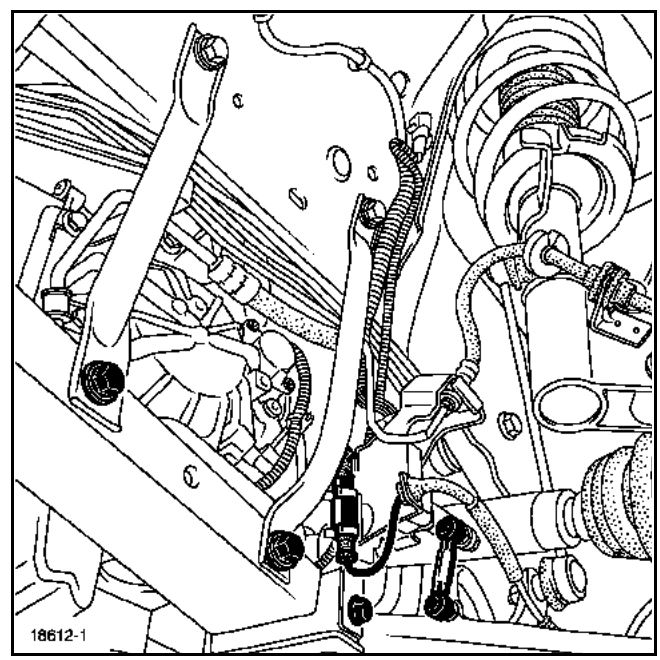

GETtheMANUALS.org

– the side member bolts (G),
– both aluminium side members,

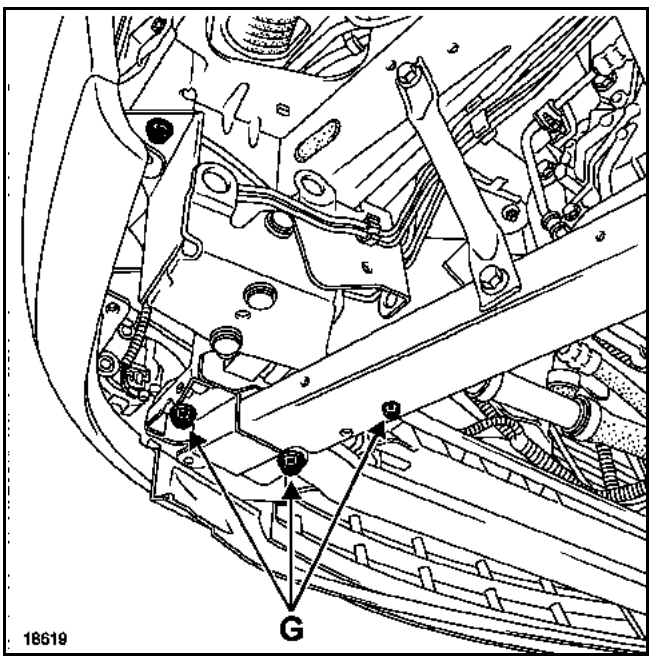

– the return stabiliser bar tie-rod nuts,
– the steering ball joint nuts.

Loosen the front tie-rod mounting bolts (B).

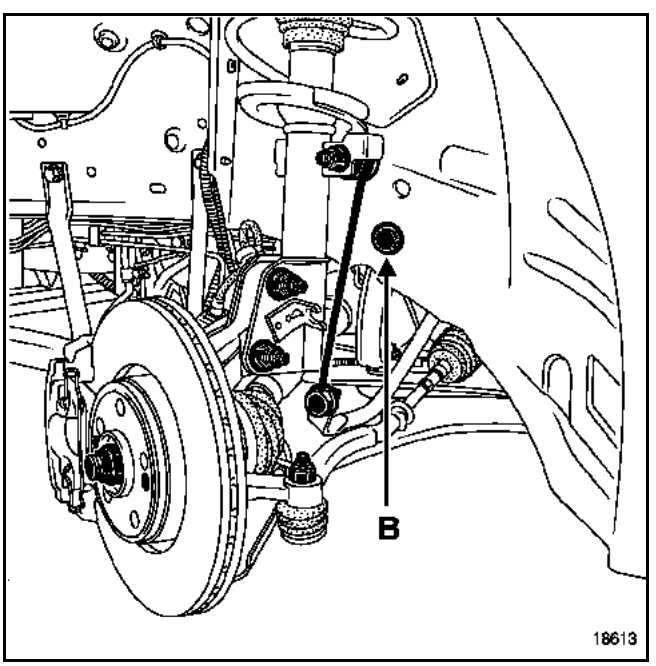

Position the **Mot. 453-01** hose clamp.

Remove:
– the steering shaft yoke bolt,
– the power assisted steering mounting bolt,
– the engine tie-bar bolts (Y),
– the acoustic tie-rod bolts,
– the sub-frame rear mounting bolts.

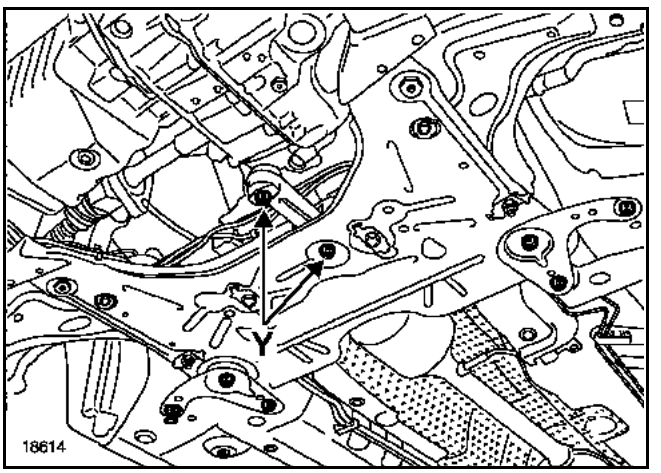

Place a component jack under the sub-frame.

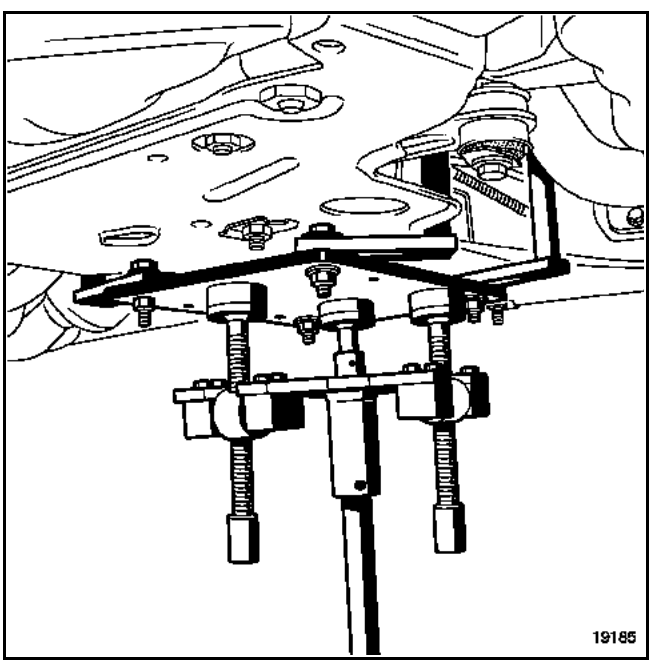

Unclip the brake pipes and sensor wiring from the sub-frame and the tie-rods.

GETtheMANUALS.org

Remove the two front tie-rod bolts (B).

Lower the sub-frame by **20 centimetres**.

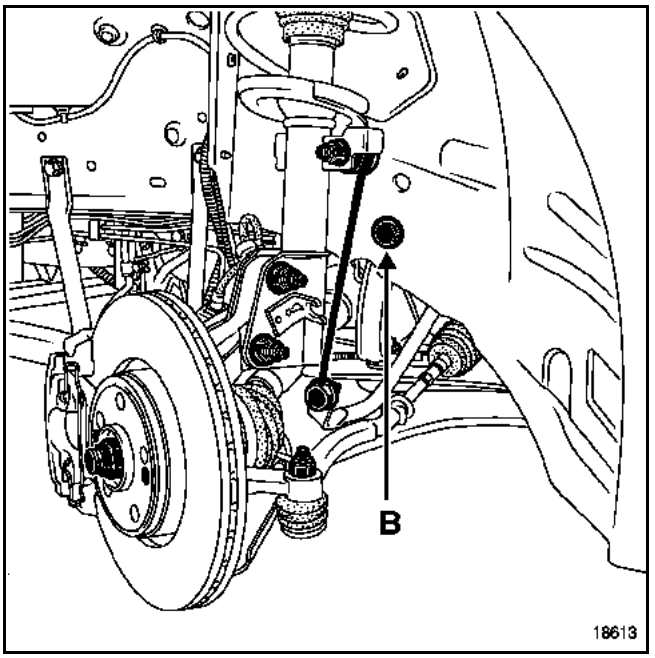

Tilt the stabiliser bar forwards.

Remove:
– the heat shield on the steering rack,
– the steering rack.

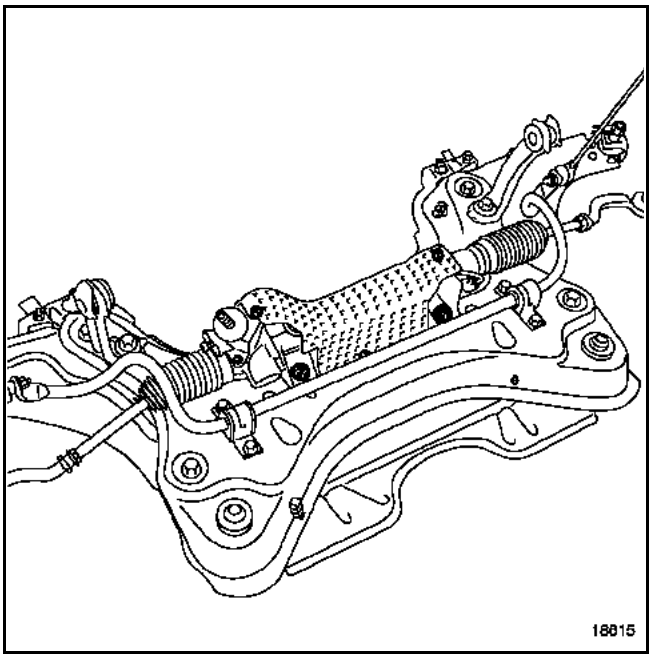

REFITTING

IMPORTANT: the steering shaft yoke bolt and nut, the steering wheel bolt, the sub-frame bolts and the steering rack bolts must be replaced. Tighten to the recommended torque.

In the engine compartment, align the universal joint and the pinion stem on the steering rack. Position the yoke nut and bolt.
Move the yoke nut and bolt up to the loctite glue. Hold the nut tight. Tighten to the recommended torque.

Refit the heat shield correctly.

NOTE: the cover (C) on the yoke nut is not to be replaced during reassembly.

With the engine running, fill and drain the power assisted steering circuit by turning the steering wheel fully in one direction then the other.

IMPORTANT: The steering column must be adjusted to replace the steering rack yoke bolt. See repair method 36B, steering column section.

GETtheMANUALS.org

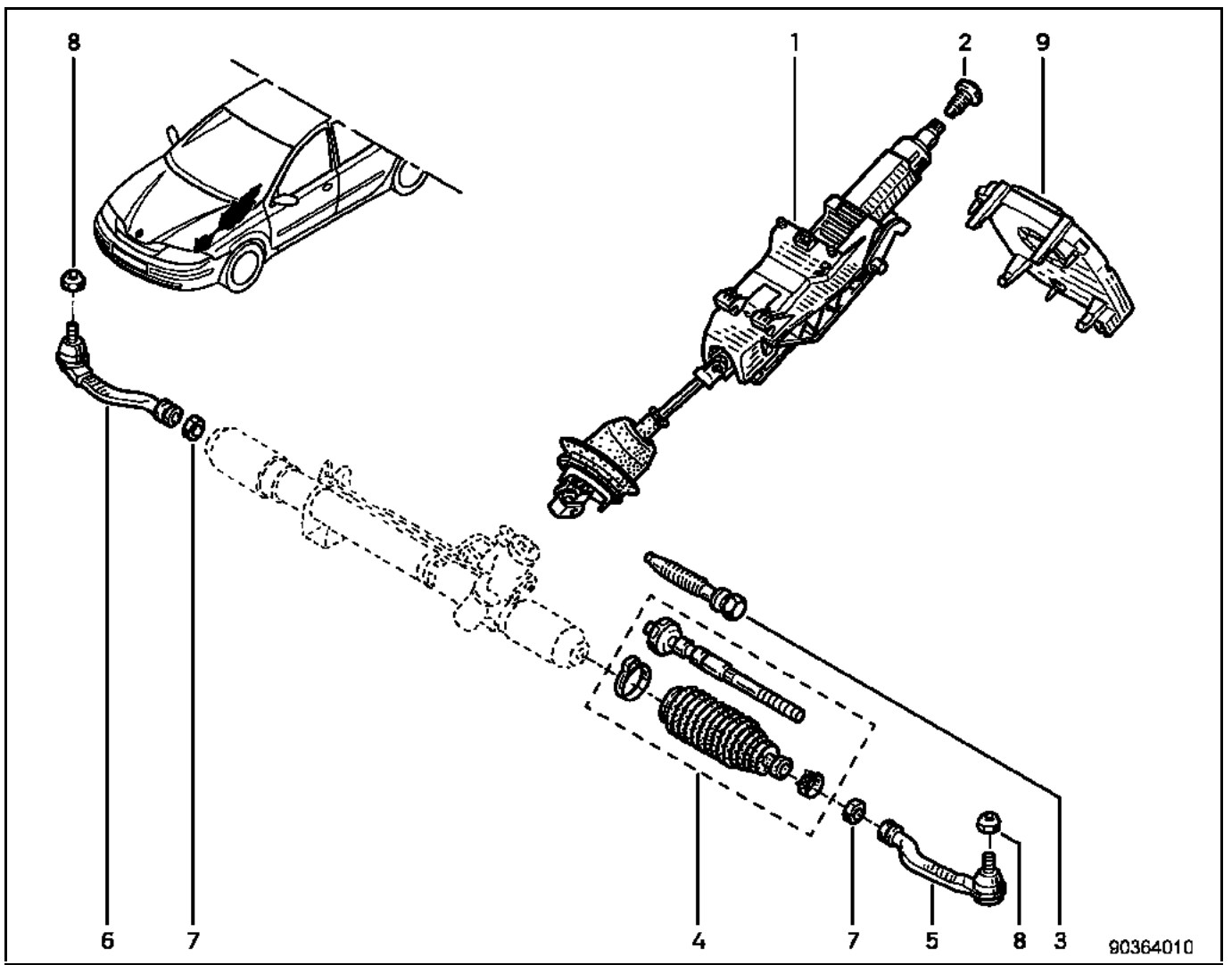

GETtheMANUALS.org

SPECIAL TOOLING REQUIRED	
Dir. 1594	Steering shim

TIGHTENING TORQUES (in daNm)	
Fork bolt	2.1
Steering column mounting bolt	2.1
Electric lock bolt	0.8
Lower shell bolt	0.2
Steering wheel bolt	4.4

Put the vehicle on a two-post lift.

Set the vehicle wheels straight.

Unlock the column.

REMOVAL

Lock the airbag computer using a fault finding tool. See fault finding manual, Section 88C.

Unlock the steering column as follows.

Insert the Renault Card as far as it will go (+ after ignition).

Withdraw the Renault Card to the first notch (+ accessories).

Disconnect the battery.

Remove:
– the driver's front airbag module by inserting a screwdriver into opening (J) to release system (K),

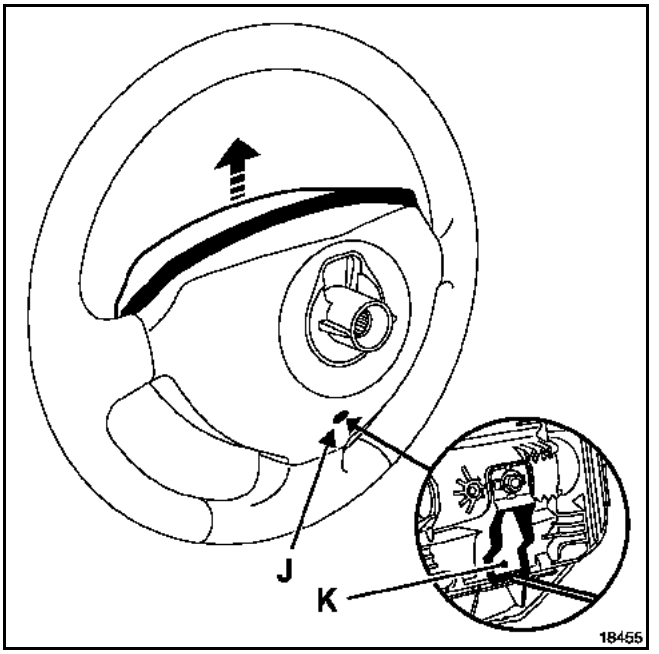

– the airbag connectors,
– the connectors in the steering wheel,
– the steering wheel bolt,

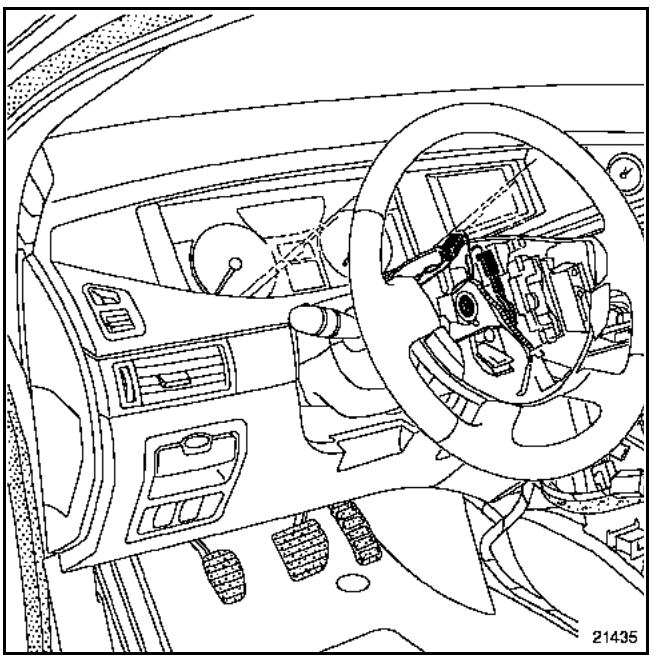

– the two casing mounting bolts (I),

GETtheMANUALS.org

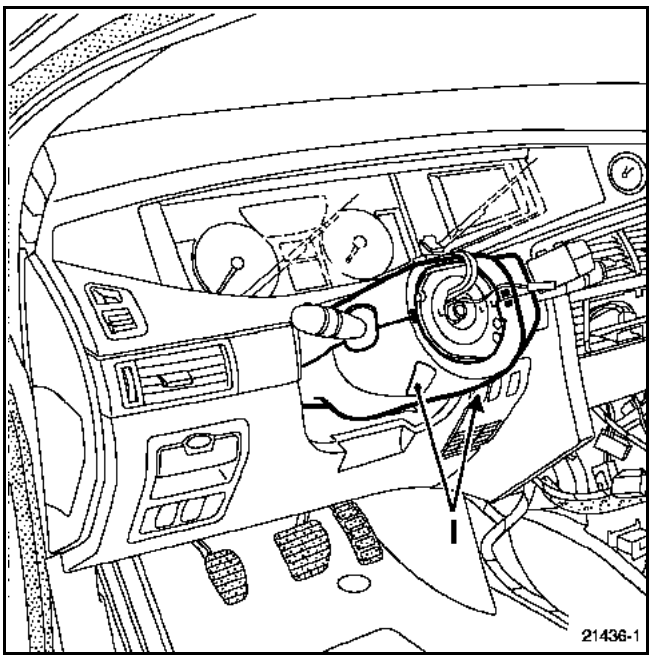

– the upper cowling,
– the lower cowling.

Disconnect the connectors from the switches.

Remove:
– the mounting bolt from the switch assembly (the bolt is accessible at the centre point of the airbag sensor);

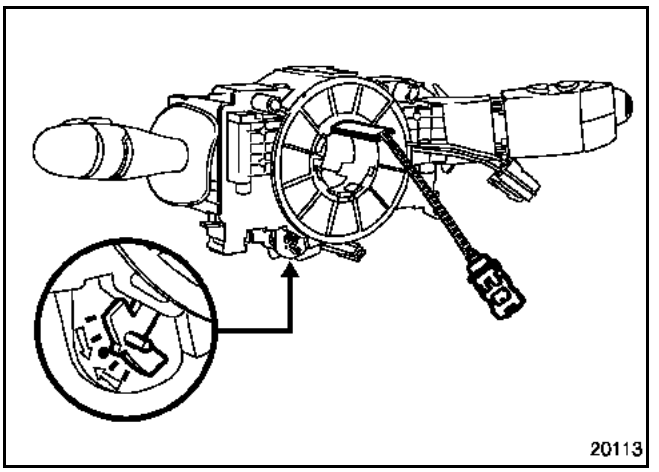

– the mounting bolt for the electric steering column lock.

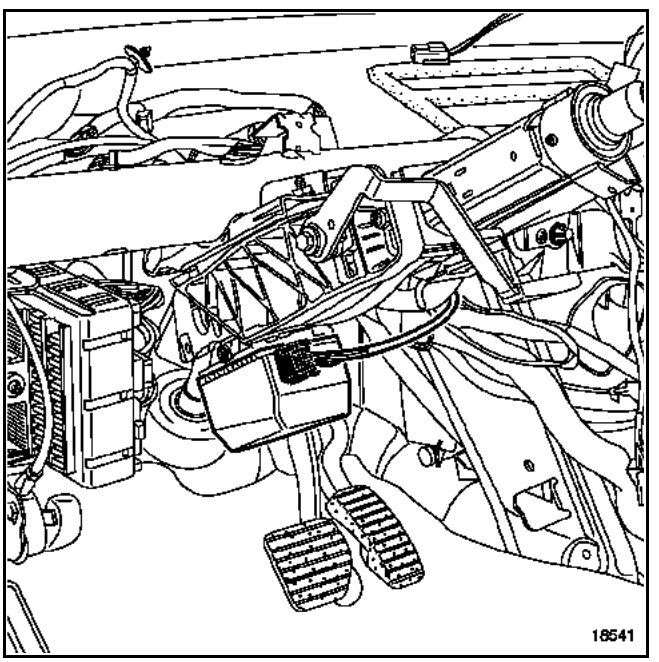

IMPORTANT: the mounting bolt for the electric steering column lock has a left-hand thread. To loosen the bolt, turn in a clockwise direction.

REMINDER: the lock must be released.

GETtheMANUALS.org

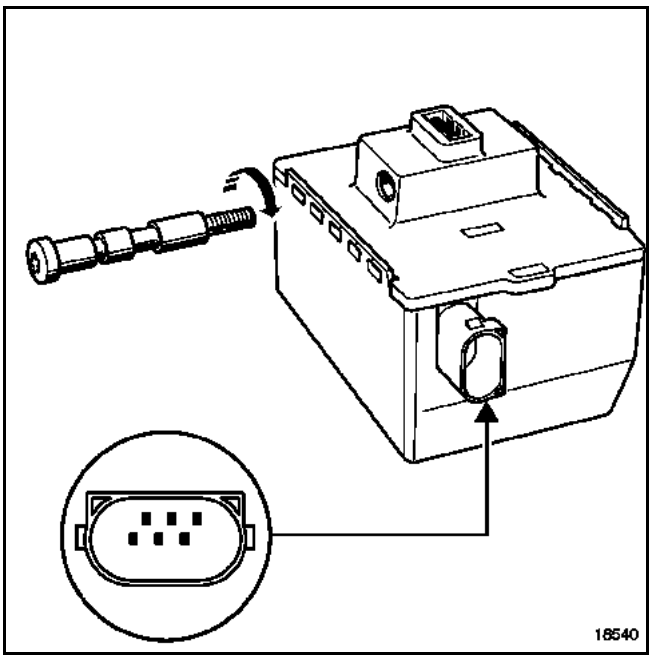

Remove the electric steering column lock.

In the engine compartment, remove:
– the steering rack yoke bolt,
– the steering rack yoke nut.

Tighten the yoke bolt by a few turns.
To release the nut, tap on the bolt head.
Eject and throw away the cover (C). Keep the nut.

Unclip the gaiter: three clips (D) on the white ring, located at 120˚.
Push the plastic ring in the passenger compartment.

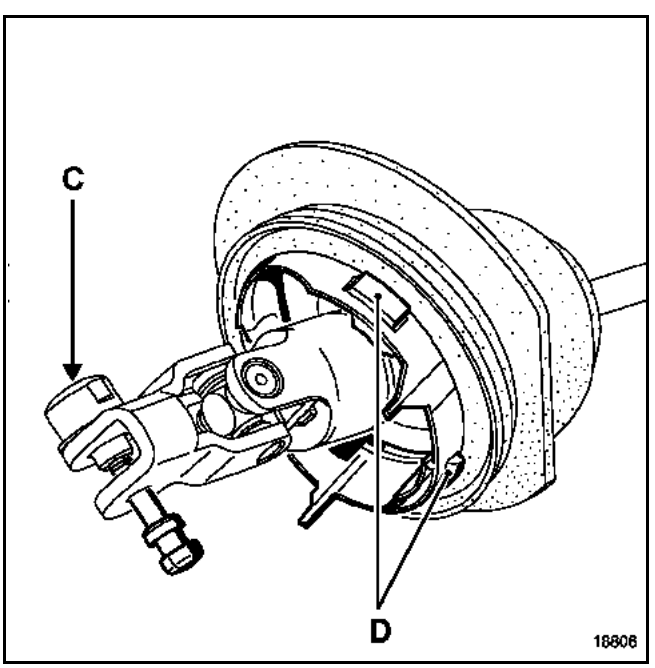

Suspend the gaiter from the steering column on the front scuttle panel in the passenger compartment.

Remove:
– the instrument panel upper trim,

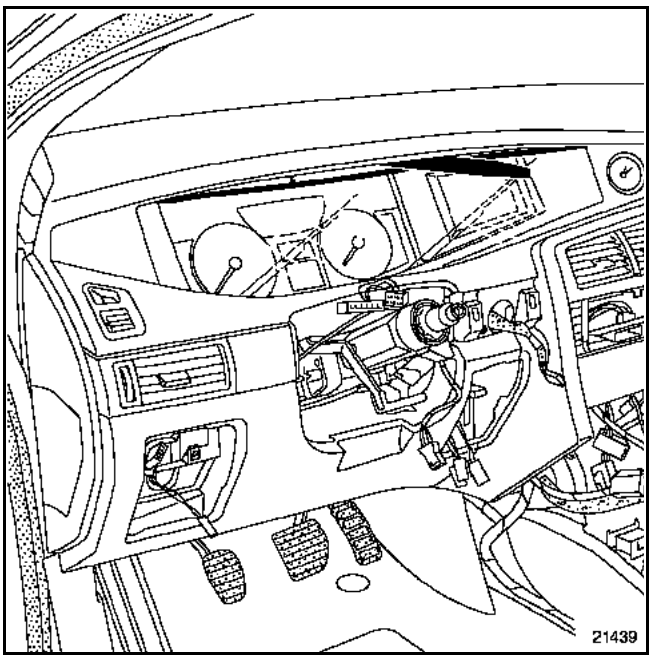

– the instrument panel lower trim,

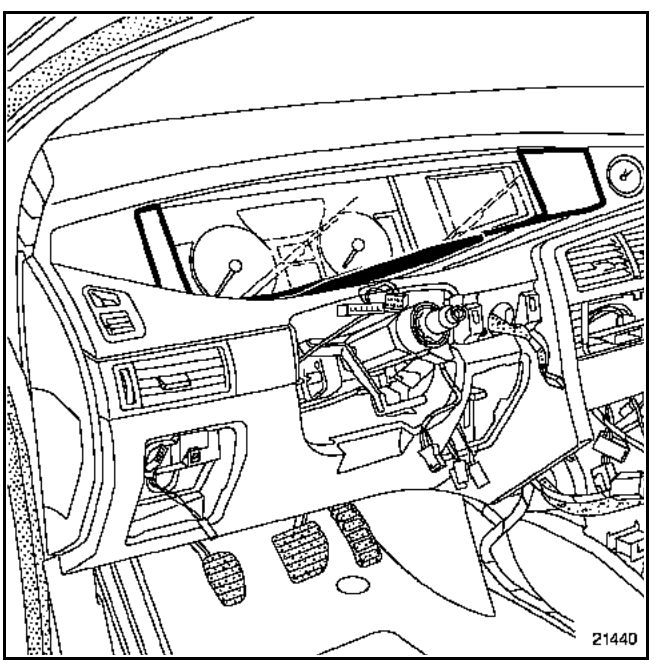

– the two instrument panel mountings.

Swivel the instrument panel upward.

GETtheMANUALS.org

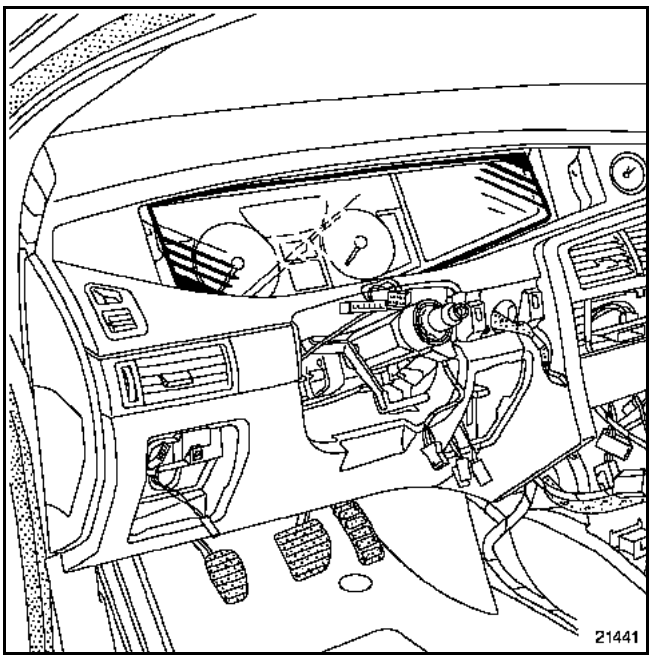

Remove:
– the two mounting bolts from the steering column,

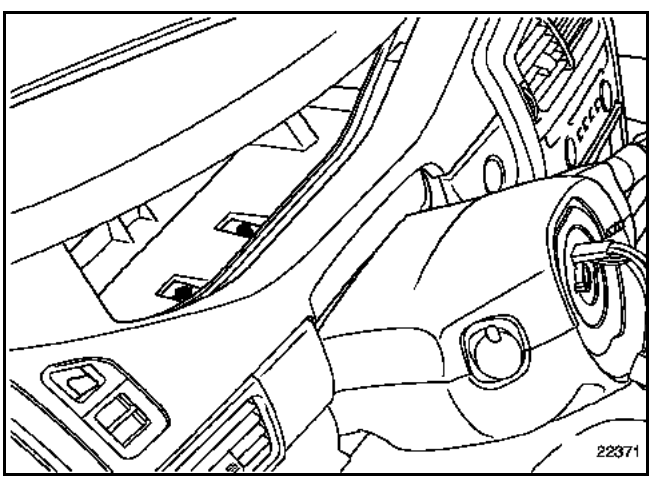

– the steering column.

Centre and lock the column by means of steering column shim **Dir. 1594** (the shaft (1) ring must be visible in front of the shim).

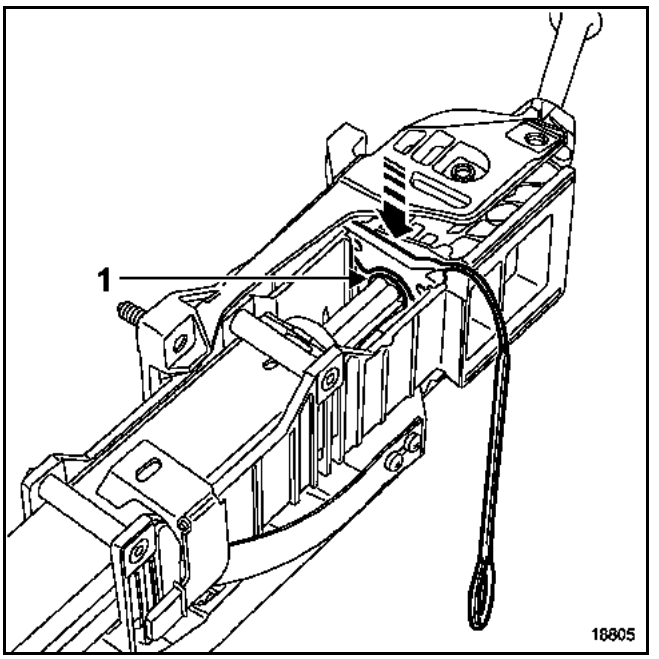

REFITTING

IMPORTANT: the steering shaft yoke bolt and nut and the steering wheel bolt must be replaced. Tighten to the recommended torque.

In the passenger compartment, insert the steering column universal joint in the scuttle panel opening, as close as possible to the steering rack pinion stem.

Fit:
– the two hooks on the column in the slots;
– the centring device in the slot located between the column mounting nuts.

Refit the column nuts.

Align the arrow on the steering column gaiter with the arrow on the scuttle panel (under the floor carpet). Clip the steering column gaiter.

In the event of replacement of the steering column, the screw, the steering rack yoke nut and the shim are pre-assembled.

In the engine compartment, align the universal joint and the pinion stem on the steering rack.

Position the yoke nut and bolt.
Move the yoke nut and bolt up to the loctite glue. Hold the nut tight. Tighten to the recommended torque.

GETtheMANUALS.org

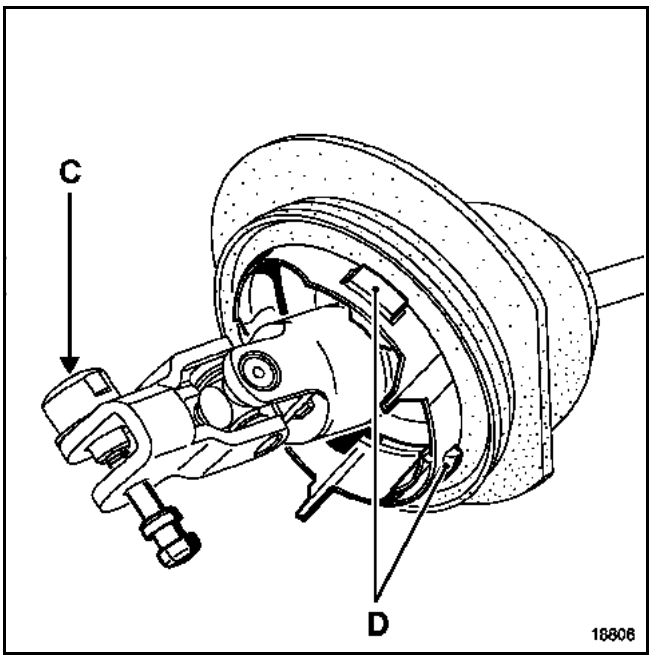

NOTE: the cover (C) on the yoke nut is not to be replaced during reassembly.

Refit:
– the steering shaft yoke, torque tightened (**2.1 daNm**),
– the two mounting bolts on the steering column;
– the instrument panel bolts,
– the instrument panel trims,
– the electric lock with its left-hand thread bolt;
– the rotary switch,
– the switch connectors,
– the cowlings,
– the cowling screws,
– the steering wheel bolt and washer,
– the steering wheel connectors,
– the airbag connectors,
– the driver's front airbag module.

GETtheMANUALS.org

SPECIAL TOOLING REQUIRED	
Mot. 453-01	**Hose clamp pliers**

Put the vehicle on a two-post lift.

REMOVAL

Remove:
– the two mounting bolts of the power steering reservoir,
– the accessories belt.

Fit a **Mot. 453-01** clamp to the supply pipe.

Disconnect the supply and high pressure pipes. Be prepared for fluid to drain from the power assisted steering.

IMPORTANT: as the alternator is located below the pump, it is essential to protect it against the flow of power steering fluid.

Remove the three pump mounting bolts.

Remove the pump.

REFITTING

Refitting is the reverse of removal. The belt tension is adjusted automatically (spring tensioner).

With the engine running, fill and bleed the circuit by turning the steering wheel from lock to lock.

GETtheMANUALS.org

SPECIAL TOOLING REQUIRED	
Mot.453-01	Hose clamp pliers

TIGHTENING TORQUE (in daNm)	
Wheel bolt	11

Put the vehicle on a two-post lift.

REMOVAL

Unclip:
– the diesel filter wiring harness from the power steering reservoir retainer,
– the diesel filter from the power steering reservoir retainer.

Remove:
– the front right wheel,
– the wheel arch covers,
– the accessories belt.

Fit a **Mot. 453-01** clamp to the supply pipe.

Disconnect the supply and high pressure pipes. Be prepared for fluid to drain from the power assisted steering.

IMPORTANT: as the alternator is located below the pump, it is essential to protect it against the flow of power steering fluid.

Remove the reinforcement bar (between the reservoir mounting and the recirculation unit).
Remove the three pump mounting bolts.
Remove the pump.

REFITTING

Refitting is the reverse of removal. Tighten the gear tensioner again correctly.
The belt tension is adjusted automatically (spring tensioner).

With the engine running, fill and bleed the circuit by turning the steering wheel from lock to lock.

GETtheMANUALS.org

SPECIAL TOOLING REQUIRED	
Mot. 453-01	Hose clamp pliers
Mot. 1505	Belt tension checking device (FREQUENCY METER)

TIGHTENING TORQUE (in daNm)	
Wheel bolt	11

Put the vehicle on a two-post lift.

REMOVAL

Put the vehicle on a two-post lift.

Disconnect the battery.

NOTE: before disconnecting the battery, you must:
- **switch off the ignition,**
- **switch off all consumers,**
- **wait until the fan stops (after switching off the + after ignition),**
- **if the vehicle is equipped with Carminat, wait until the system stops after switching off the + after ignition (approximately 1 minute).**

Remove:
- the front right wheel,
- the front right-hand wheel arch liner,
- the engine cover,
- the right-hand brake calliper.

Disconnect the speed sensor connectors from the right-hand front wheel.

Remove:
- the lower ball joint,
- the right-hand steering ball joint (P),
- the right-hand driveshaft intermediate bearing,
- the shock absorber lower mounting bolts (J),
- the front right driveshaft,
- the right-hand tie-rod (H),

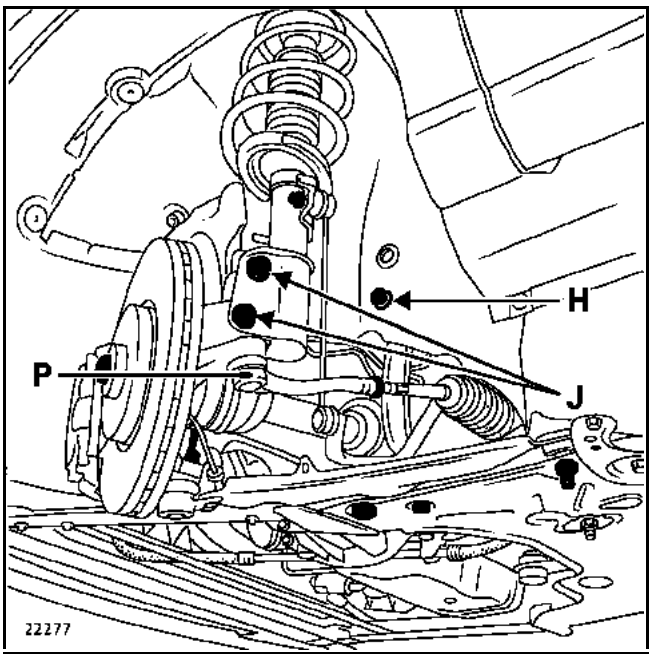

- the belt (A).

Fit a **Mot. 453-01** clamp to the supply pipe.

Disconnect the supply and high pressure pipes. Be prepared for fluid to drain from the power assisted steering.

Remove:
- the tension adjustment system (B);
- the pump mounting bolt (C).

GETtheMANUALS.org

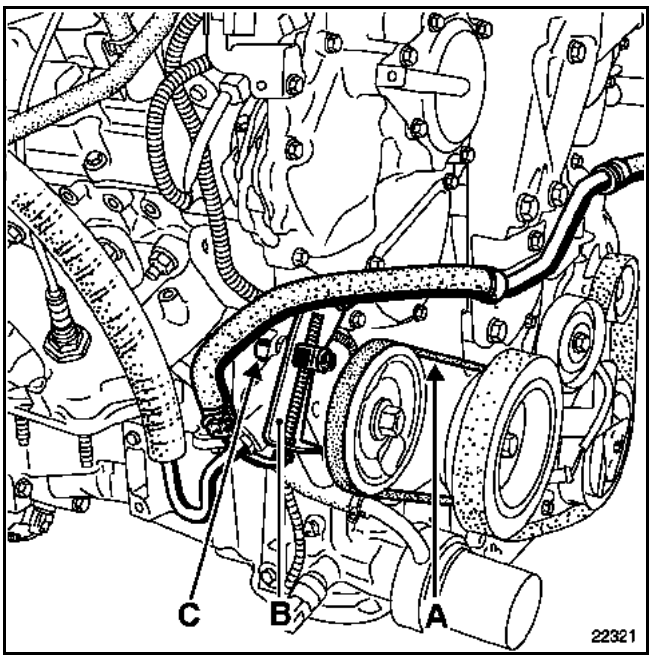

Remove the pump.

REFITTING

Fit:
– the pump,
– the pump mounting bolt (C),
– the tension adjustment system (B),
– the belt.

Stretch the belt. See **Section 07A**.

With the engine running, fill and bleed the circuit by turning the steering wheel from lock to lock.

GETtheMANUALS.org

SPECIAL TOOLING REQUIRED	
Mot. 453-01	Hose clamp pliers
EQUIPMENT REQUIRED	
Crowfoot pipe socket from Facom for example, for loosening high pressure pipe	

Put the vehicle on a two-post lift.

REMOVAL

Remove:
– the front right wheel,
– the front right-hand wheel arch liner,
– the engine cover,
– the air pipe.

Release the injector electric wiring harness.

Unclip:
– the power steering reservoir,
– the diesel filter.

Remove:
– the two mounting bolts of the power steering reservoir,
– the accessories belt.

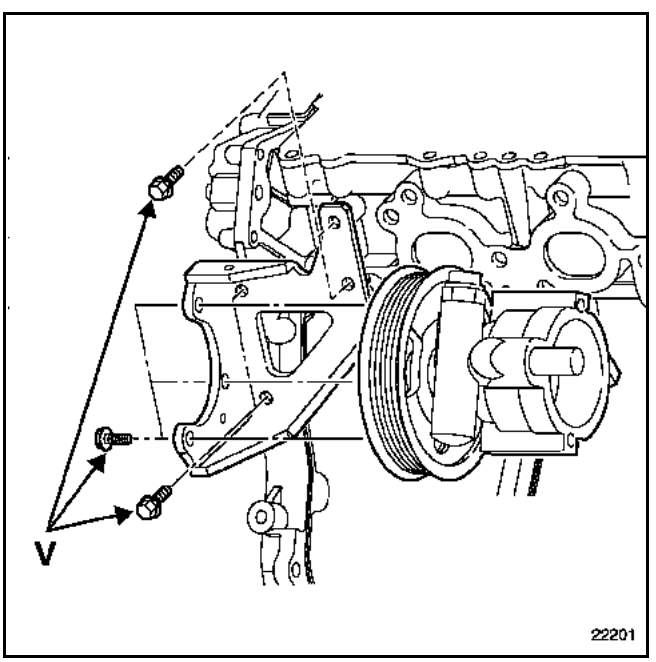

Fit a **Mot. 453-01** clamp to the supply pipe.

Disconnect the supply and high pressure pipes. Be prepared for fluid to drain from the power assisted steering.

Remove:
– the three pump mounting bolts (V),
– the pump.

REFITTING

Fit:
– the pump,
– the pipes,
– the accessories belt.

The belt tension is adjusted automatically (spring tensioner).

Fit:
– the reservoir bolts,
– the wiring harness,
– the air pipe.

With the engine running, fill and bleed the circuit by turning the steering wheel from lock to lock.

GETtheMANUALS.org

SPECIAL TOOLING REQUIRED	
Dir. 1083 -01	PAS pump pulley fitting tool.

REMOVAL

Note the dimension relative to the end of the shaft.
Extract the pulley.

Use the press fitted with an extractor.

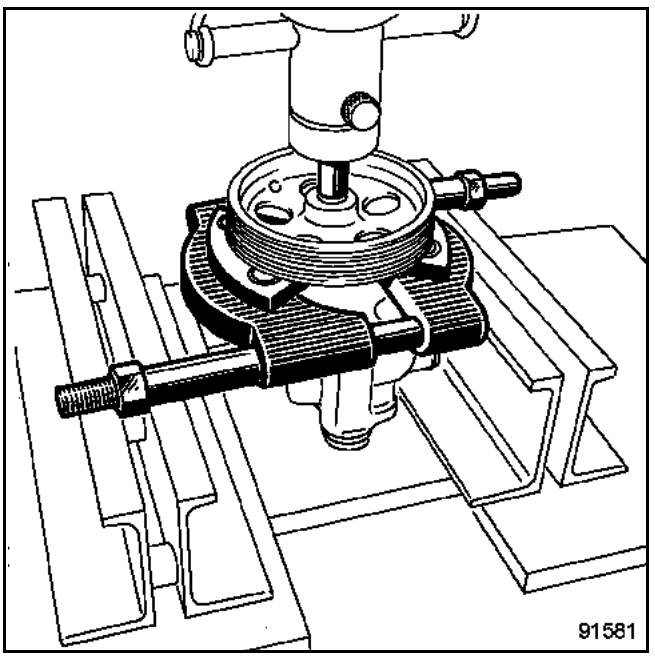

REFITTING

Grasp the pulley with tool **Dir. 1083-01** until you reach the dimension measured before it was removed (liberally grease the thread and the pad on the pulley).

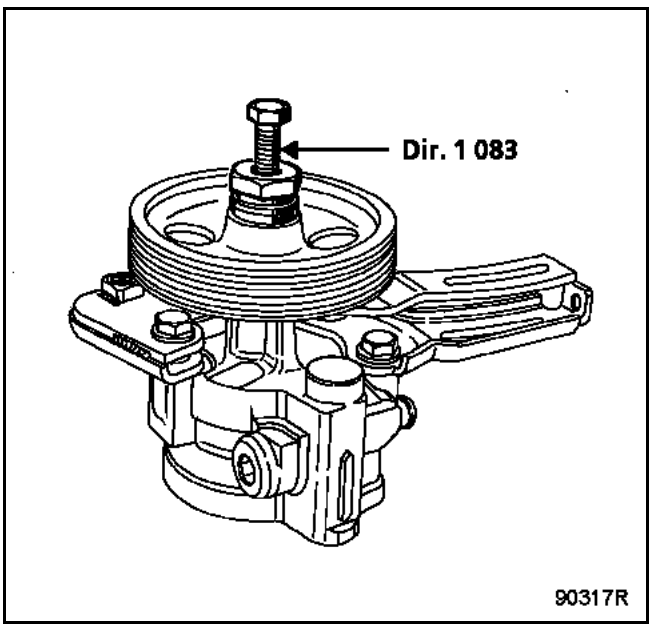

Observe the pulley shank dimension.

X = 55.85 ± 3 mm.

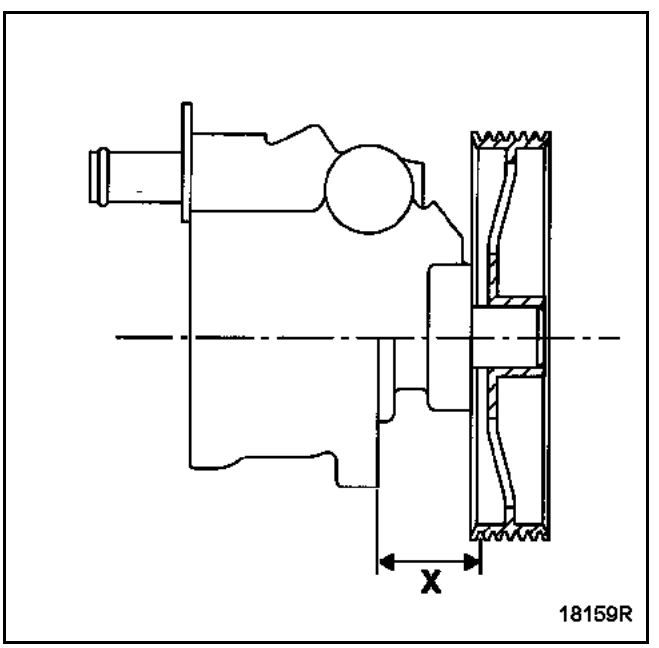

GETtheMANUALS.org

SPECIAL TOOLING REQUIRED		
T. Ar.	1094	Puller with 3 sliding jaws
Dir.	1083-01	PAS pump pulley fitting tool.

Place the pump in a vice on the bench.

Fit tool **T. Ar. 1094**.

Extract the hub.

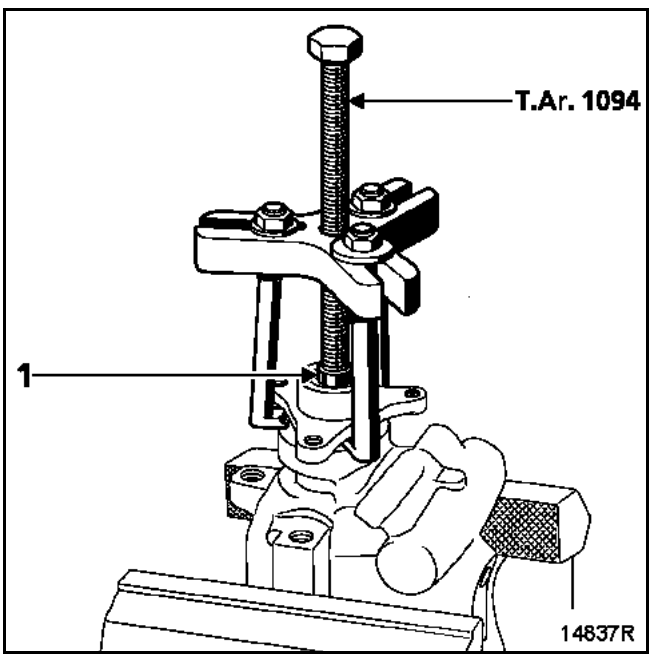

NOTE: insert a bolt (1) between the pump shaft and the pushrod of tool **T. Ar. 1094**.

Fit the hub (new) and press it in using tool **Dir. 1083-01**. Coat it beforehand with multifunction grease to aid refitting.

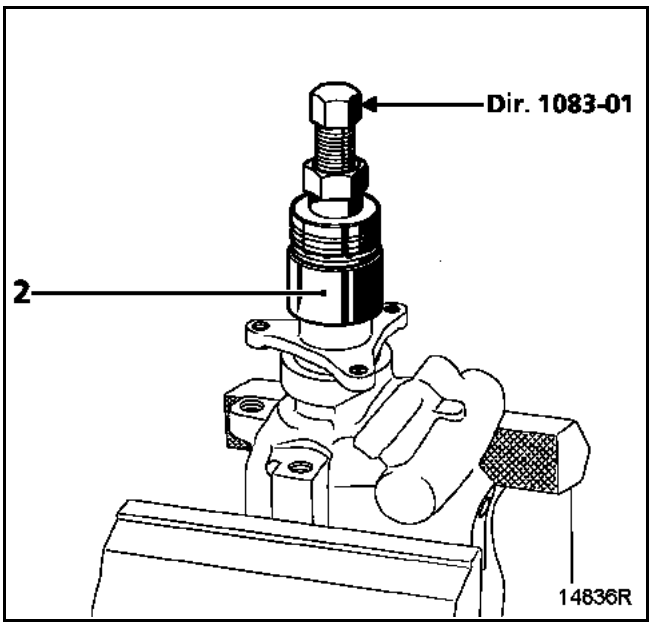

Maintain the fitting dimension by inserting a **76.5 mm** shim between the hub and the pump body when reassembling it.

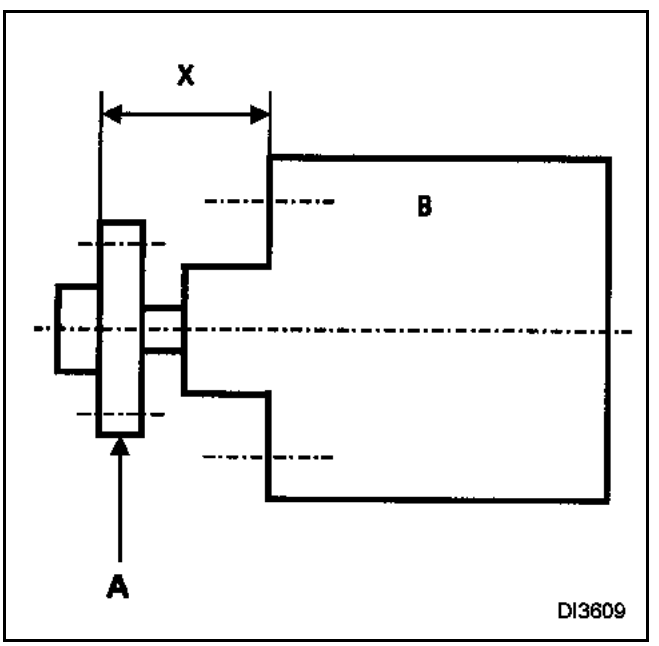

A Hub
B Power assisted steering pump
X = **76.5 mm**

GETtheMANUALS.org

SPECIAL TOOLING REQUIRED	
Dir. 1083 -01	**PAS pump pulley fitting tool.**

REMOVAL

Note the dimension relative to the end of the shaft. Extract the pulley.

Use the press fitted with an extractor.

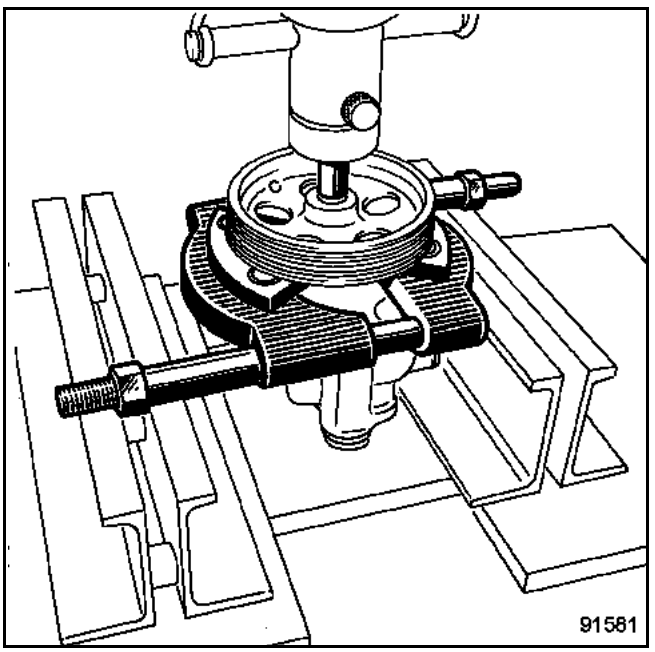

REFITTING

Grasp the pulley with tool **Dir. 1083-01** until you reach the stop on the shaft (liberally grease the thread and the pad on the pulley).

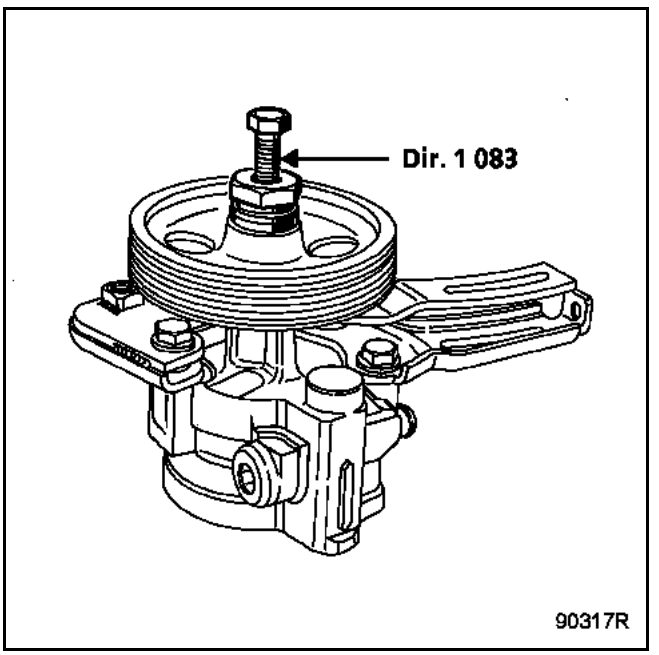

GETtheMANUALS.org

SPECIAL TOOLING REQUIRED	
Dir. 803	PAS pump pressure gauge adapter
Dir. 1 204	Pressure measuring connector
Mot. 453-01	Hose clamp pliers
Fre. 1 085 or Fre. 244-03	Pressure gauge
Fre. 284-06	Connecting hose

Place a **Mot. 453-01** clamp on the lower hose of the pump.

Disconnect the high pressure pipes (be prepared for oil to drain out).

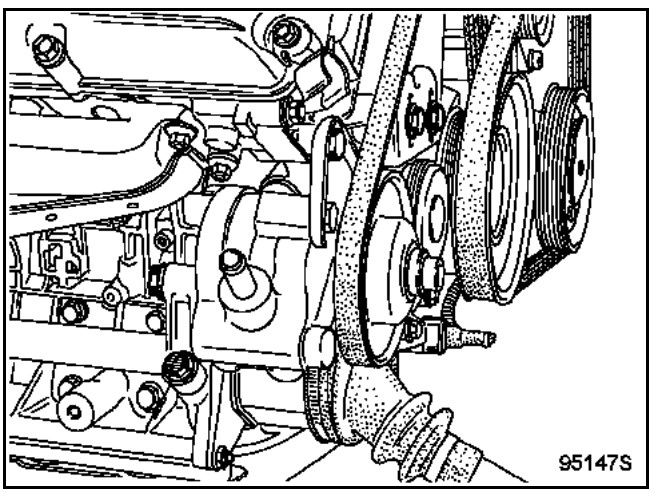

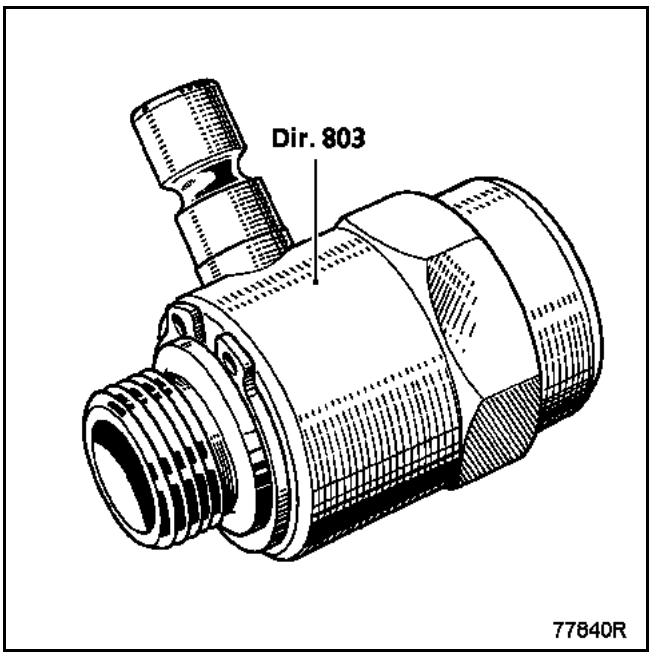

Connect the pressure gauge **Fre. 1085** or **Fre. 244-04**.

GETtheMANUALS.org

On the rigid pipework (high pressure) at the pump outlet, remove the pressure switch and connect the pump pressure test adapter **Dir. 1021** and the oil pressure gauge **Fre. 1 085** or **Fre. 244-04**.

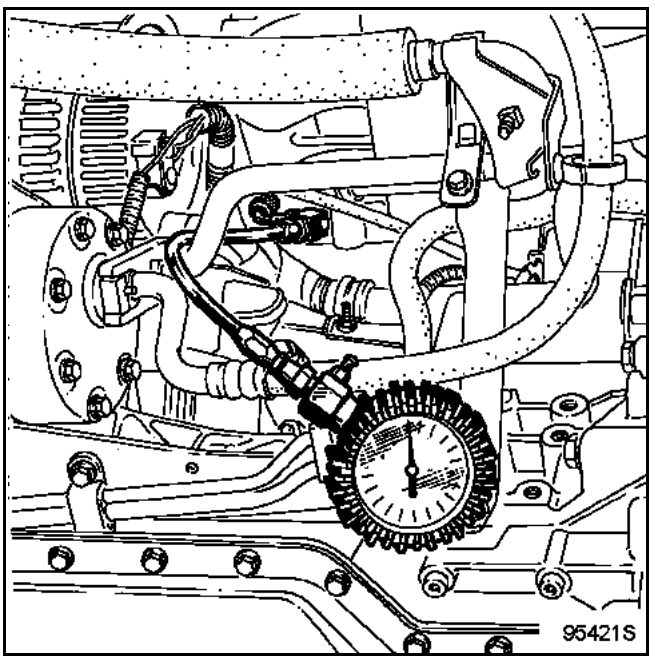

Be prepared for oil to drain out.

ALL TYPES

Remove clamp **Mot. 453-01**.

Adjust the pump to the correct level and run the engine to check the pressure.

With the wheels set straight, whatever the engine speed, the pressure should not exceed: **5** to **7 bar**.

With the wheels at full lock on one side, hold them in position, and the maximum pressure should be:
– **96 to 103 bar** for F4R and G9T engines;
– **105 to 115 bar** for the P9X engine;
– **95 to 101 bar** for the V4Y engine.

This operation should not be prolonged to avoid a significant increase in oil temperature.

Remove the adapter **Dir. 803** or **Dir. 1024** and the pressure gauge by cutting off the pump supply with a **Mot. 453-01** (V6 Engine) clamp.

Reconnect the high pressure pipes or the pressure switch (accordingly) and remove the **Mot. 453-01** clamp.

Top up the reservoir.

GETtheMANUALS.org

TIGHTENING TORQUES (in daNm)	
Brake reservoir bolt	**0.35**
Brake pipe	**1.4**
Master cylinder mounting nuts	**2.1**

IMPORTANT: drain the brake fluid to prevent damage to the mechanical parts and bodywork around the braking system.

REMOVAL

Place the vehicle on a lift.

Remove:
– the air resonator housing,
– the expansion bottle,
– the brake fluid level connector,
– the bolt fixing the reservoir to the master cylinder (1).

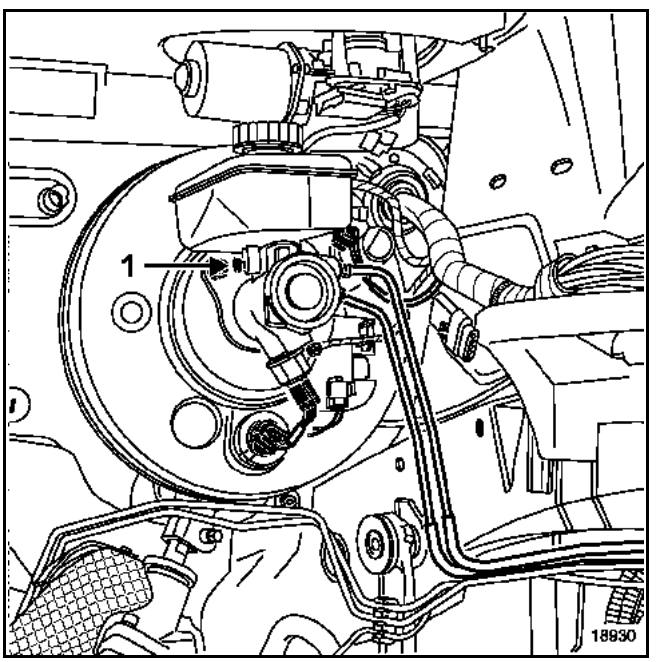

Drain the brake fluid reservoir. Remove it using a cloth.

Remove the pressure sensor connector on the master cylinder.

Repair the master cylinder brake pipes.

Remove:
– the master cylinder brake pipes,
– the brake cylinder mounting nuts on the brake servo.(2).

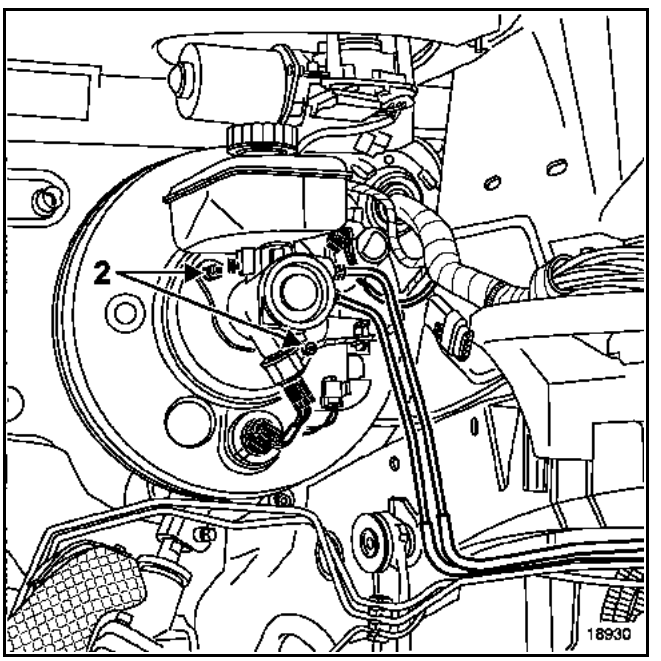

Remove the master cylinder.

GETtheMANUALS.org

Special notes for the V4Y engine

IMPORTANT: drain the brake fluid to prevent damage to the mechanical parts and bodywork around the braking system.

REMOVAL

Place the vehicle on a lift.

Remove:
– the air resonator housing,
– the expansion bottle,
– the brake fluid level connector,
– mounting bolt (1) connecting the reservoir to the master cylinder.

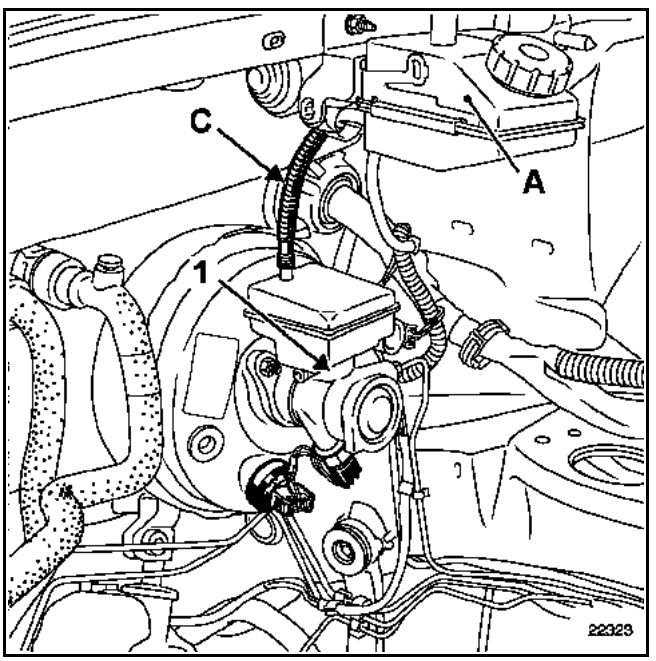

Simultaneously remove:
– upper brake fluid reservoir (A),
– connecting pipe (C) between the upper and lower reservoirs.

Drain the upper reservoir.

Remove the pressure sensor connector on the master cylinder.

Repair the master cylinder brake pipes.

Remove:
– the master cylinder brake pipes,
– the brake cylinder mounting nuts on the brake servo.(2).

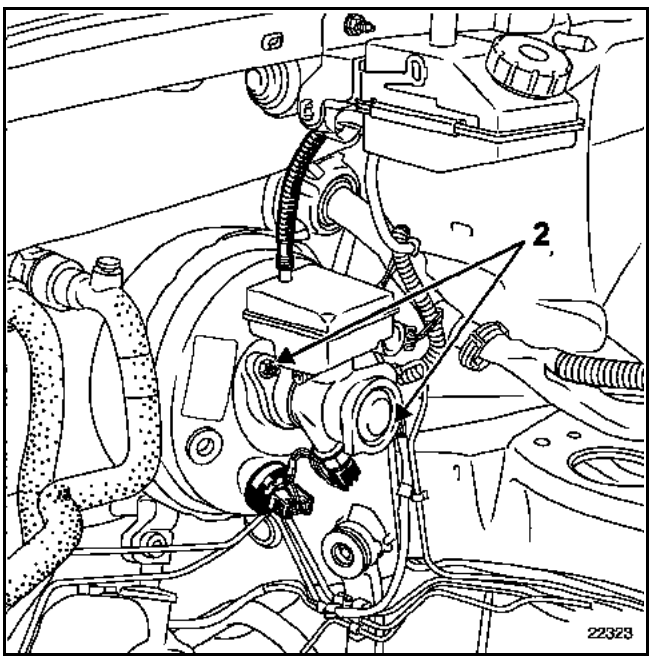

– the master cylinder.

Drain the brake fluid from the lower reservoir and master cylinder.

REFITTING

Make sure you replace the connecting pipe O-ring between the two reservoirs. Ensure the O-ring is correctly positioned in the pipe grooves.

Bleed the brake circuit following the procedure.

GETtheMANUALS.org

REFITTING

NOTE: when the master cylinder is removed, its seal (A) must always be replaced with a new one on refitting.

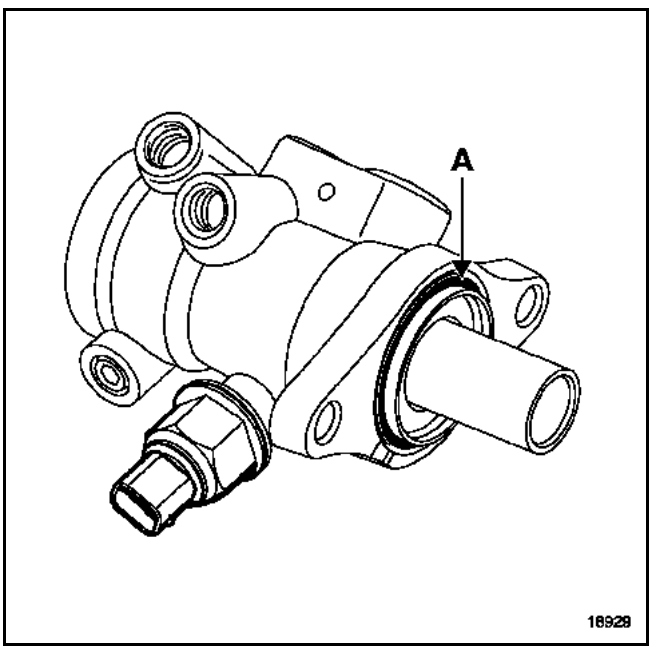

Align the master cylinder with the brake servo so that push rod enters the master cylinder housing.

Refit:
– the brake pipes according to their markings,
– the brake fluid reservoir by pressing down on it to click it into the master cylinder,
– the brake fluid reservoir mounting bolt.

Bleed the braking system (see bleeding method).

GETtheMANUALS.org

TIGHTENING TORQUES (in daNm)	
Brake reservoir bolt	0.35
Brake pipe	1.4
Master cylinder mounting nuts	2.1
Brake servo mounting nuts	2.9

Place the vehicle on a lift.

IMPORTANT: remember to anticipate that brake fluid will flow out; protect the mechanical parts and bodywork around the braking system to prevent damage.

REMOVAL

Remove:
– the air filter hose,
– the air filter unit,
– the fuse holder unit,
– the master cylinder (see method),
– the non-return valve on the brake servo,
– the brake servo connectors.

In the passenger compartment, remove:
– the brake pedal yoke shaft of the push rod on the brake servo,

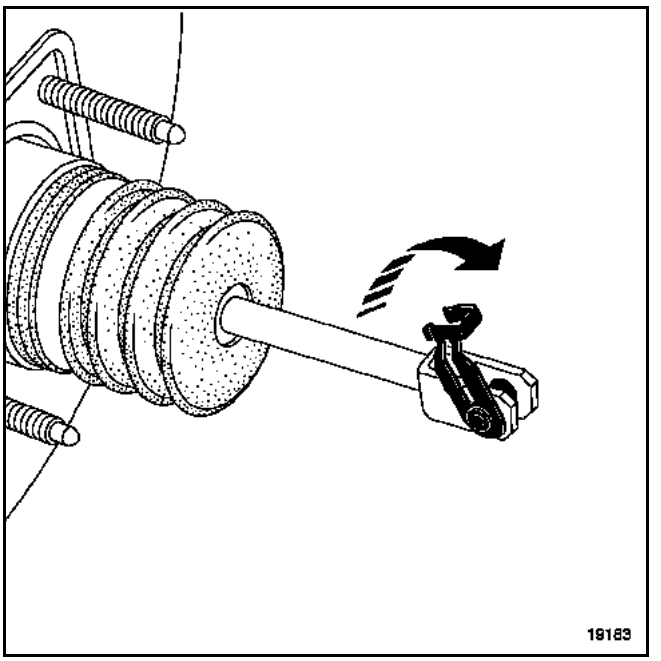

– the two brake servo mounting bolts (D) .

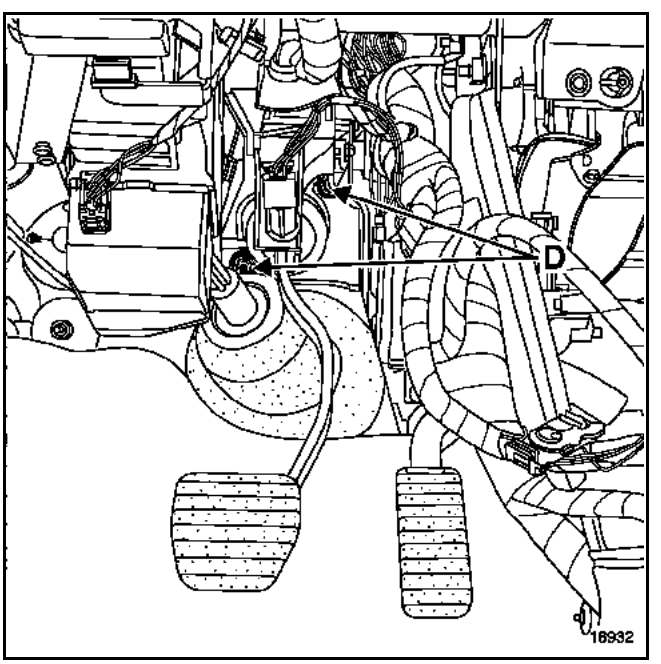

Remove the brake servo.

GETtheMANUALS.org

REFITTING

Sides X and L are not adjustable.

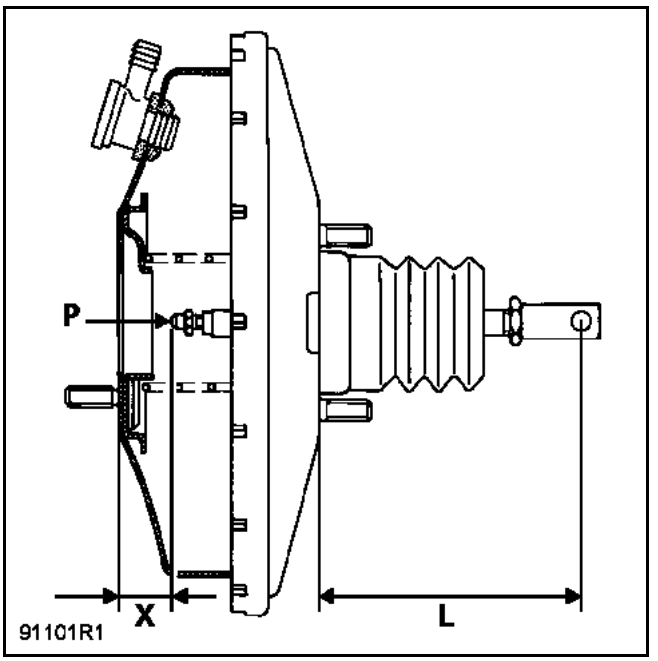

To reassemble the brake servo and master cylinder, follow the opposite procedure to removal.

GETtheMANUALS.org

SPECIAL TOOLING REQUIRED	
Mot. 453-01	Hose pliers
EQUIPMENT REQUIRED	
Vacuum pump	

SEALING CHECK

Check the sealing of the brake servo, ensuring a perfect seal between it and the master cylinder. If there is a leak, replace seal (A).

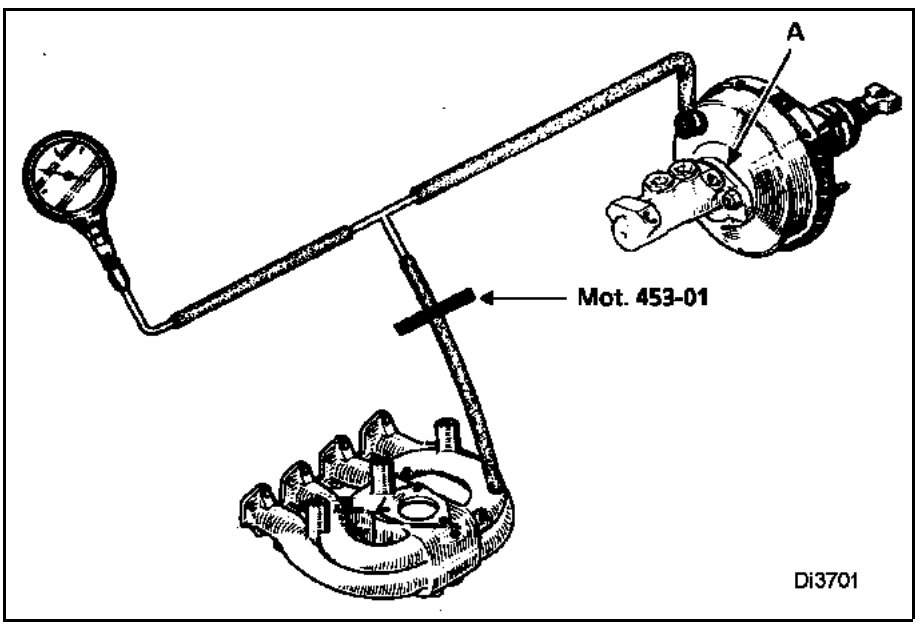

The sealing of the brake servo is checked on the vehicle when the hydraulic circuit is operating.

Connect the vacuum pump between the brake servo and the vacuum source (inlet manifold) using a "I" union and the shortest possible pipe.

Run the engine at idle speed for one minute.

Clamp the pipe (**Mot. 453-01** clamp) between the "I" union and the vacuum source.

Turn the engine off.

If the vacuum drops by more than **33 mbar** in **15 seconds**, there is a leak located either:
– at the non-return valve (replace it),
– or at the pushrod diaphragm (replace the brake servo).

If the brake servo is not operational, the braking system will operate but the force required at the pedal to obtain the equivalent deceleration as for assisted braking is considerably higher.

GETtheMANUALS.org

REPLACING THE AIR FILTER

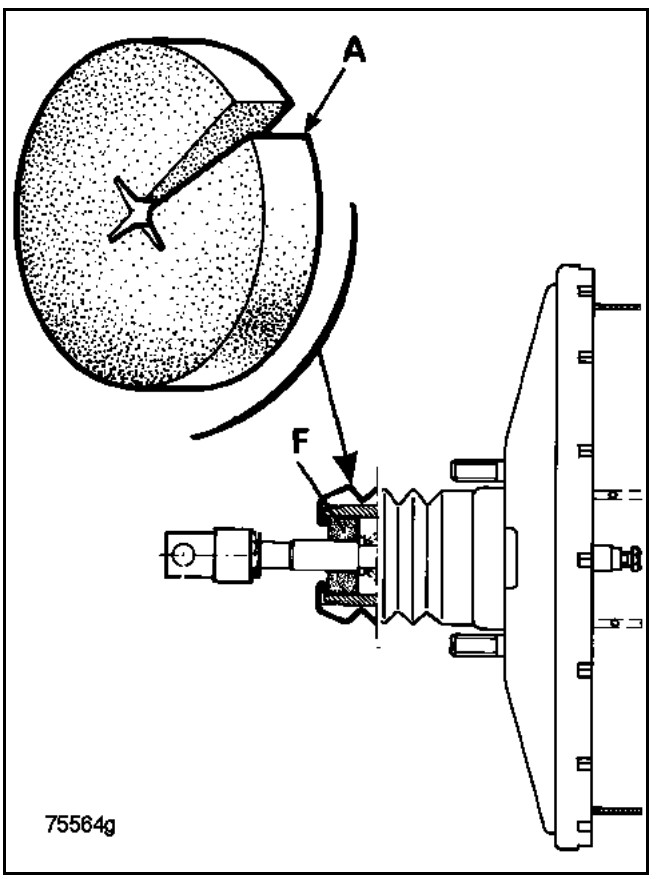

It is not necessary to remove the brake servo to change air filter (F).

Under the pedal mounting, use a screwdriver or a metal hook to remove the worn filter (F).

Cut the new filter at (A) (see diagram) and engage it around the rod then insert it into its housing taking care to extend it right across the bore to prevent the passage of unfiltered air.

GETtheMANUALS.org

G9T engine

REMOVAL

Remove:
– the vacuum pump mountings,

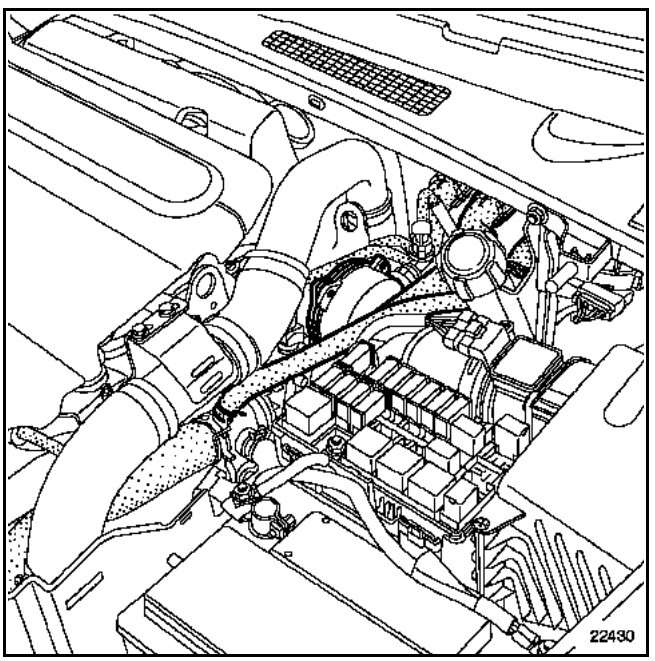

– the pump.

REFITTING

Refitting is the reverse of removal.

P9X engine

REMOVAL

Remove:
– radiator hose (X),
– hose (Y),
– the vacuum pump mountings,

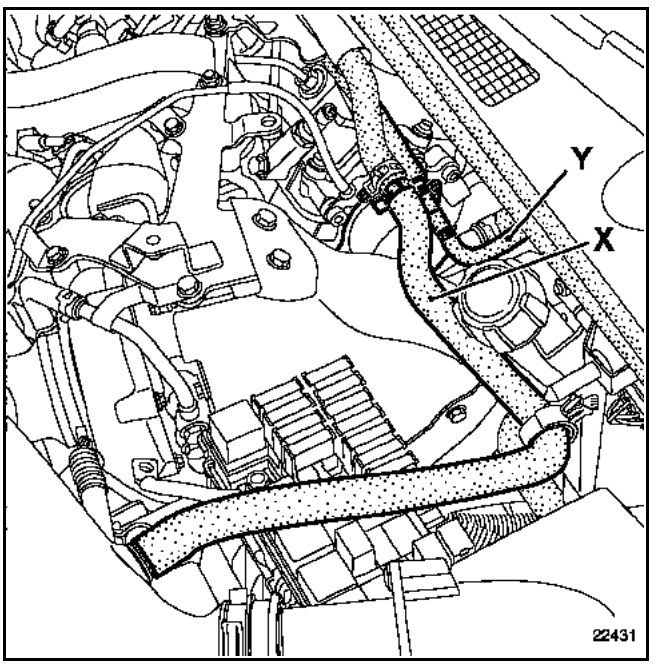

– the pump.

REFITTING

Refitting is the reverse of removal.

GETtheMANUALS.org

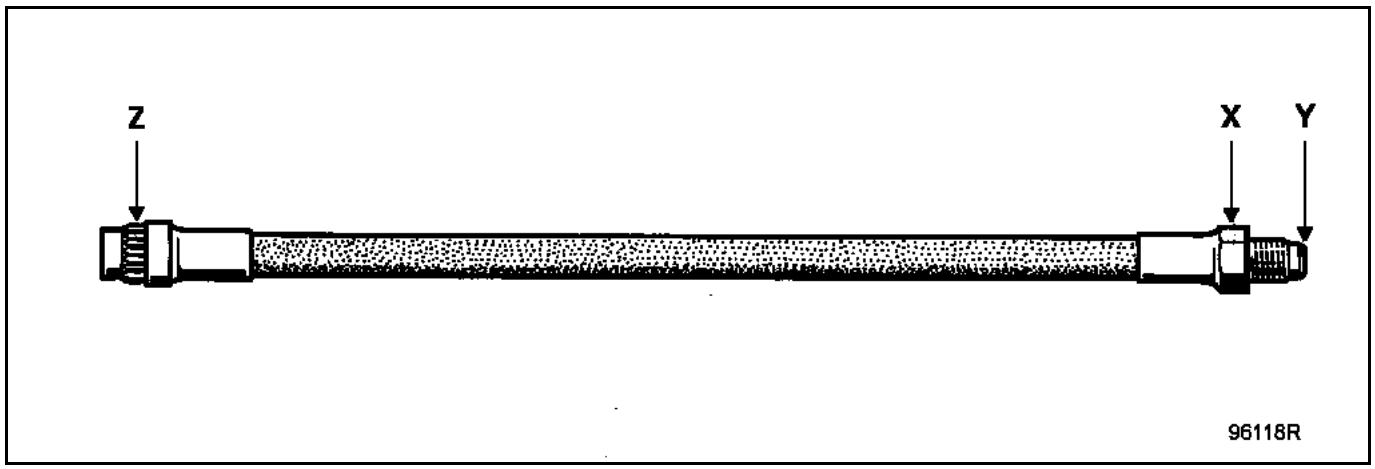

PRECAUTIONS TO BE TAKEN WHEN REMOVING - REFITTING A BRAKE CYLINDER OR A BRAKE PIPE.

For safety reasons and to ensure that the brake pipe is not twisted and is not liable to touch a suspension component, the following order of operations must be observed:

REMOVAL

Unscrew rigid piping union (1) on pipe (2) using a pipe wrench.

Unclip pin (3) lifting off the brackets.

The pipe is released from the indicator flat.

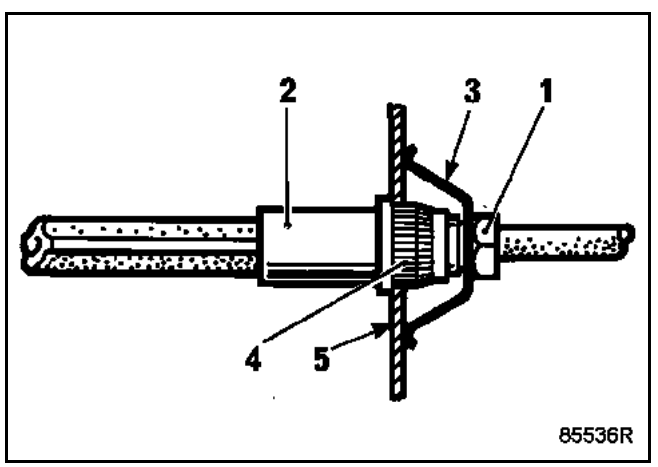

Remove the hose from the caliper and if necessary remove the caliper.

REFITTING

Fit the calliper onto the brake. Screw the pipe onto it. Tighten to a torque of **1.4 daNm**.

The brake pipes are fitted when the axle assembly is in position:
– wheels suspended (suspension in place),
– axle in line (wheels straight).

Place the brake pipe the female end piece on retaining bracket (5), without torsion pressure. Check that end piece (4) can move freely in the bracket splines. Refit:
– the pin (3),
– the rigid pipe on the brake pipe.

Ensure that the brake pipe does not move when it is being tightened.

Torque tighten the union.

Bleed the brake circuit.

GETtheMANUALS.org

REMOVAL

On the brake pedal mounting, disconnect the brake pedal position sensor.

Turn it one quarter turn anticlockwise.

Remove the pedal position sensor.

REFITTING

The brake pedal position sensor has automatic adjustment which adapts according to the pedal position.

Before the sensor is refitted, it must by set to its minimum position by pulling on it.

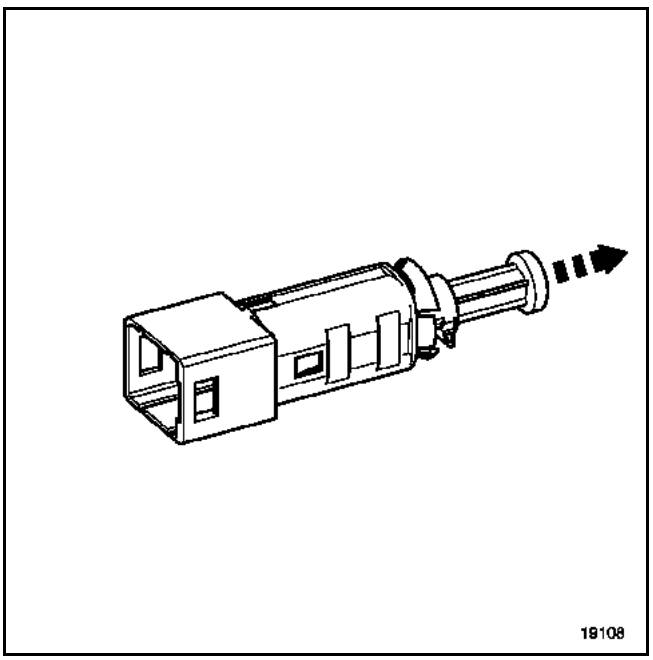

REFITTING

Put the sensor in its housing and turn it one quarter turn clockwise.

Reconnect the brake pedal position switch connector.

GETtheMANUALS.org

DIAPHRAGM MOVEMENT SENSOR

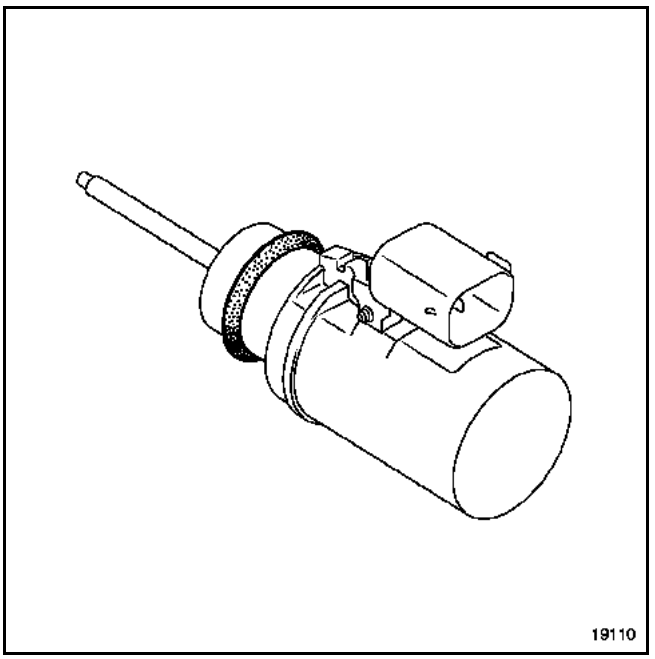

REMOVAL

Remove:
– the air filter hose,
– the air filter unit,
– the fuse holder unit,
– the expansion bottle.

Disconnect the sensor.

Using a small screwdriver, push back the sensor mounting clip.

Remove the diaphragm movement sensor.

REFITTING

IMPORTANT: It is essential to replace the seal before refitting the diaphragm movement sensor.

Position the sensor on the brake servo. Clip it on by pressing on the top of the sensor.

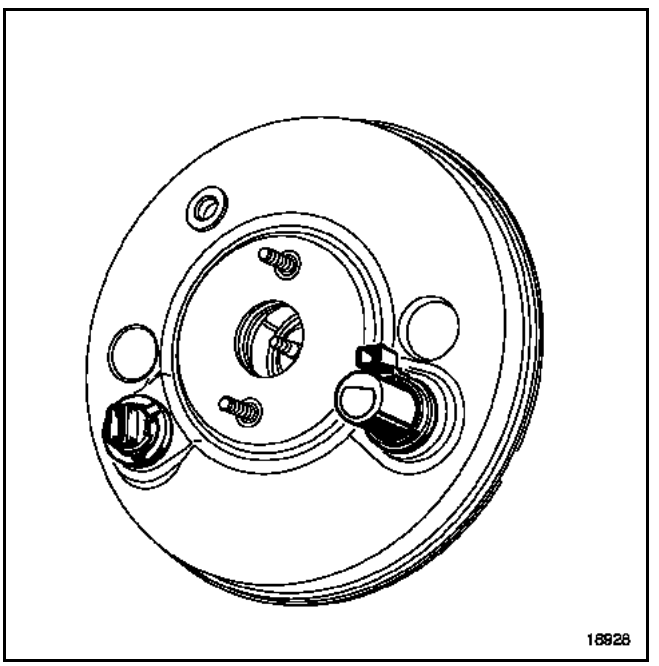

GETtheMANUALS.org

TIGHTENING TORQUES (in daNm)	
fork bolt	2.1
Steering column mounting bolt	2.1
Electric lock bolt	0.8
Lower shell bolt	0.2
Steering wheel bolt	4.4
Reinforcement plate bolts	2.1
Reinforcement plate nut	2.1
Reinforcement beam bolts	2.1
Reinforcement plate side bolts	0.8

REMOVAL

Remove the steering column (refer to **Section 36B**).

Remove:
– the central console,
– the central air distribution unit,
– the instrument panel (refer to **Section 83A**).

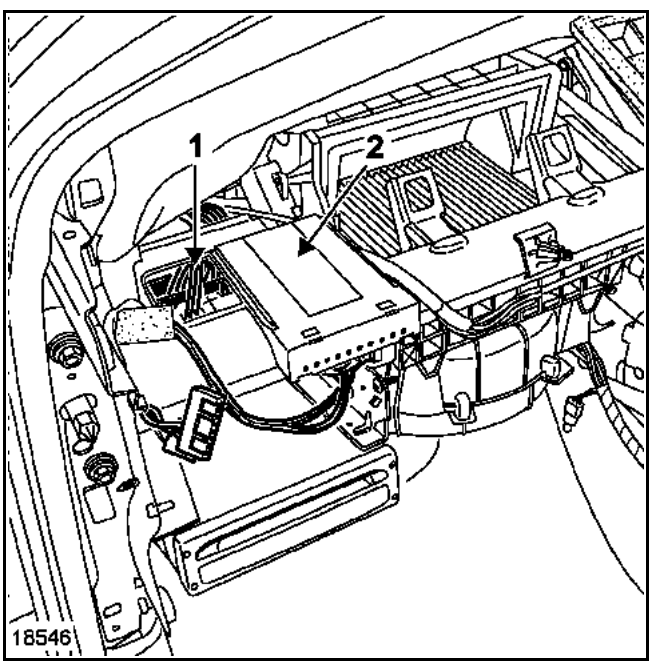

Remove:
– the relay/fuse box (1),
– the voice synthesiser unit (2).

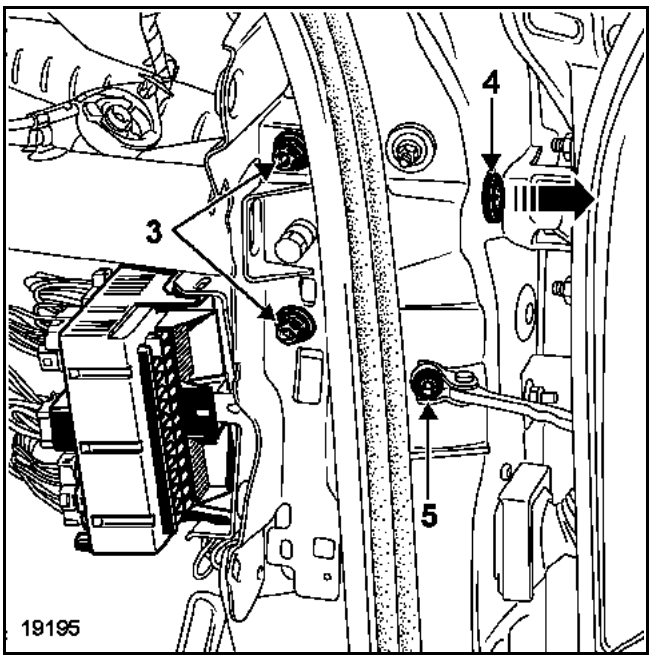

Remove:
– the door check strap bolts (5) enabling the beam bolts (4) to be unscrewed,
– the beam mounting screws (3) and (4),
– instrument panel beam.

GETtheMANUALS.org

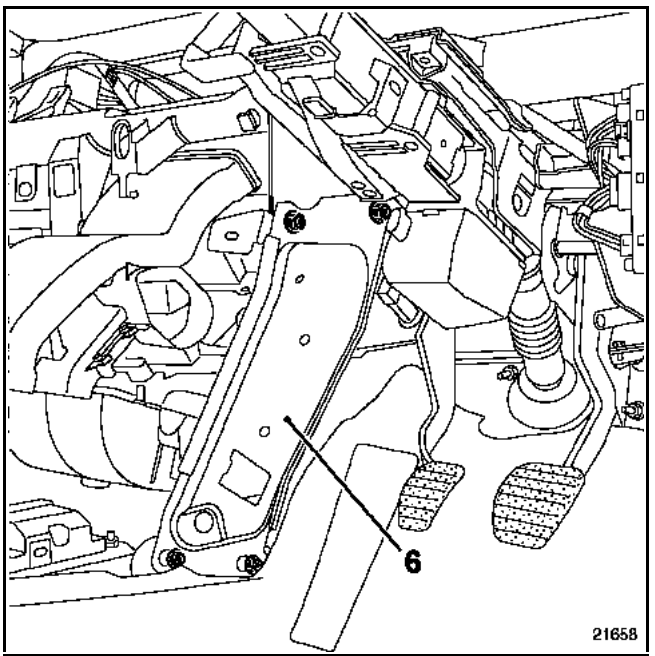

Remove the protection flange (6).

DRIVER'S SIDE

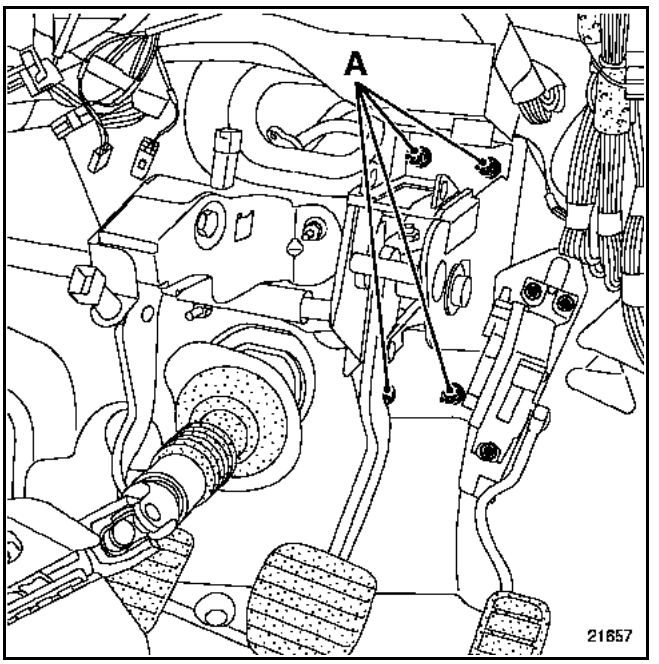

Disconnect the clutch, brake and accelerator pedal sensors.

Remove the pedal release mounting screws (A).

GETtheMANUALS.org

Passenger side

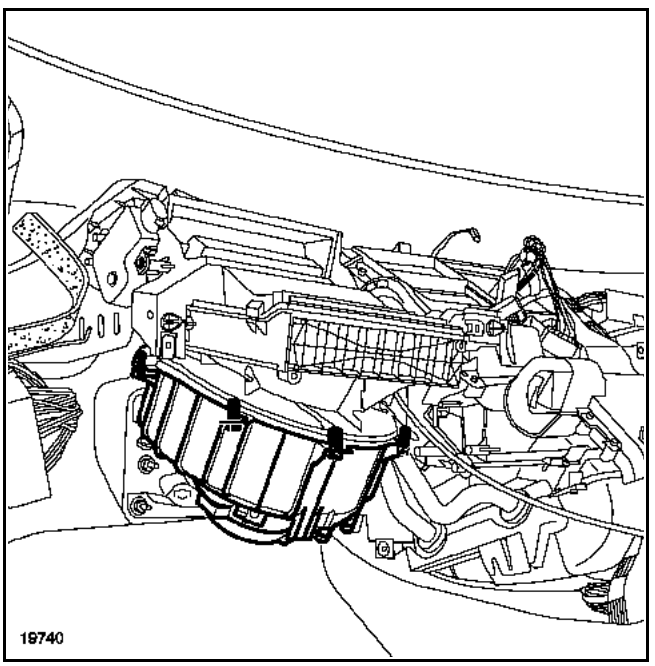

Remove:
– the fan assembly,

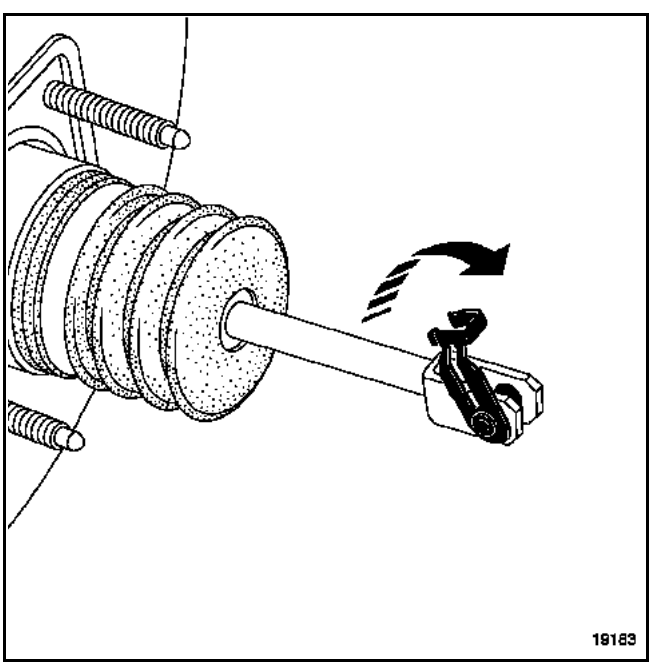

– the brake pedal yoke shaft of the push rod on the brake servo,

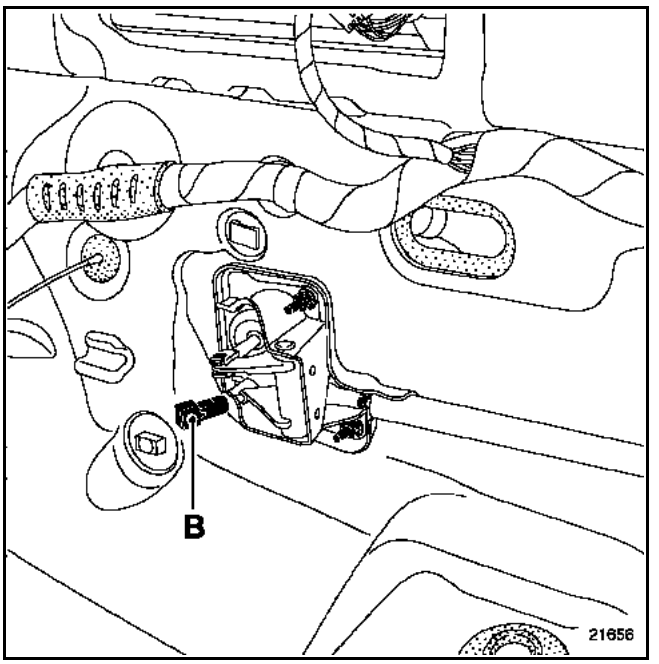

– switch (B),

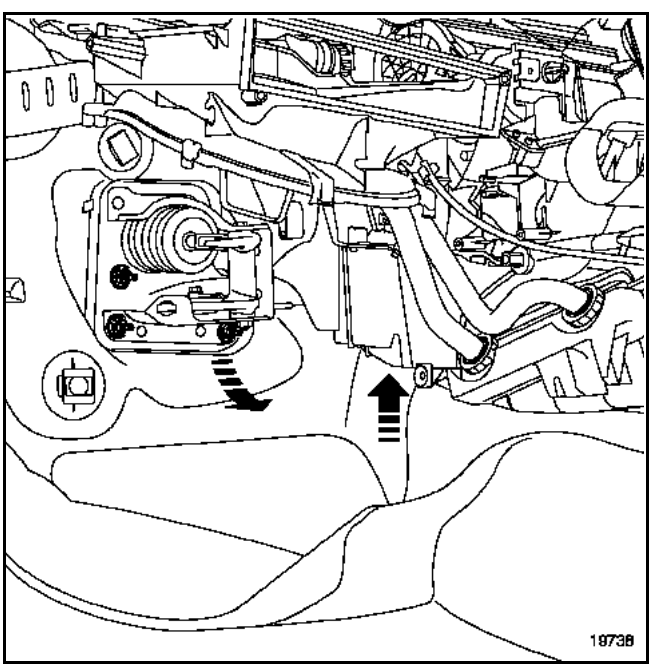

– the four brake servo mountings,
– the pedal release mountings,
– the distribution.

With the assistance of another person, lift up the heating unit and slide the pedal release device between the heating unit and the tunnel.

Remove:
– the pedal assembly pedal release,
– the brake pedal.

GETtheMANUALS.org

TIGHTENING TORQUES (in daNm)	
Yoke bolt	2.1
Steering column mounting bolt	2.1
Electric lock bolt	0.8
Lower shell bolt	0.2
Steering wheel bolt	4.4

REFITTING

Proceed in the reverse order to removal, respecting the tightening torques.

Exploded view of clutch master and slave cylinders

GETtheMANUALS.org

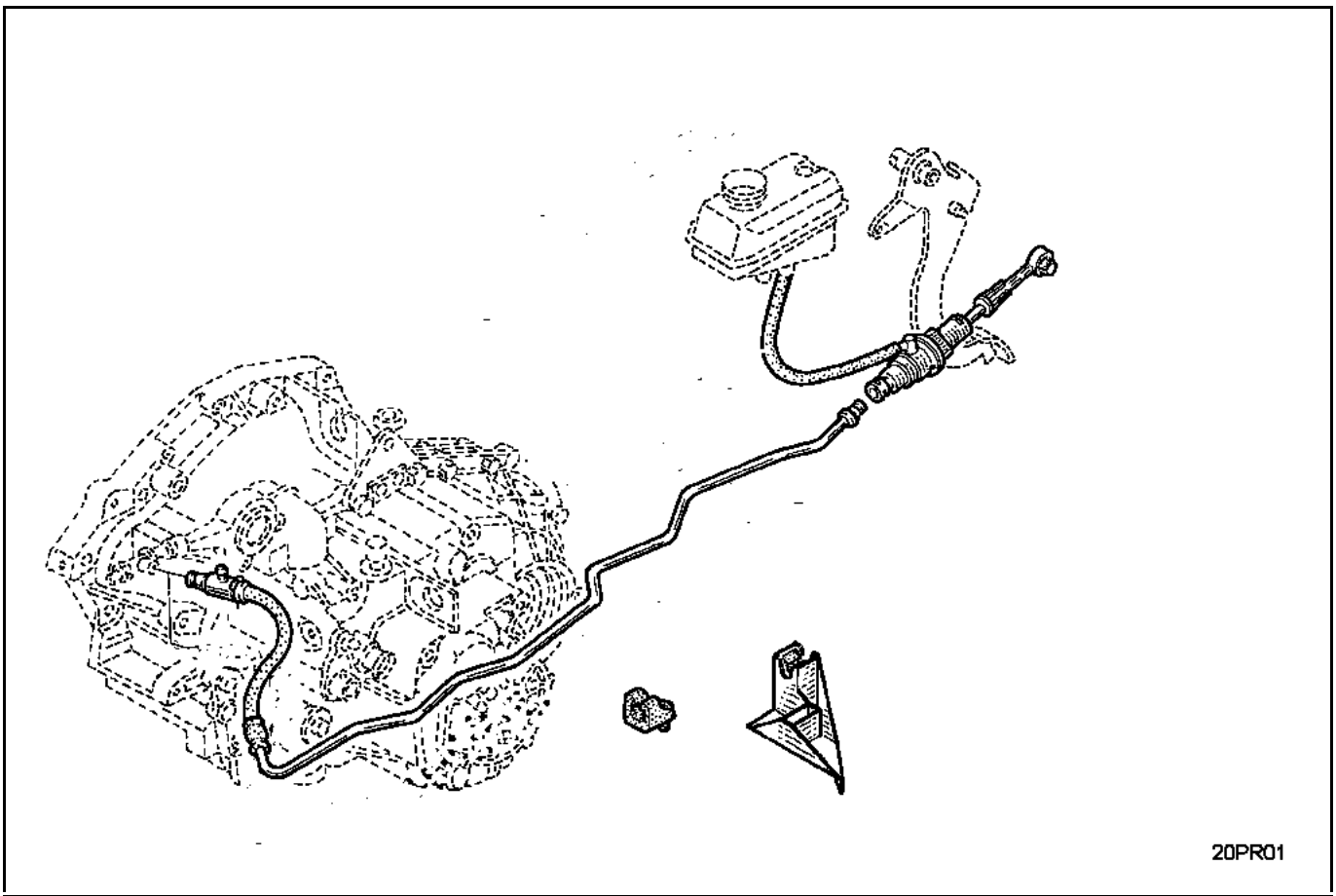

Exploded view of clutch master and slave cylinders

GETtheMANUALS.org

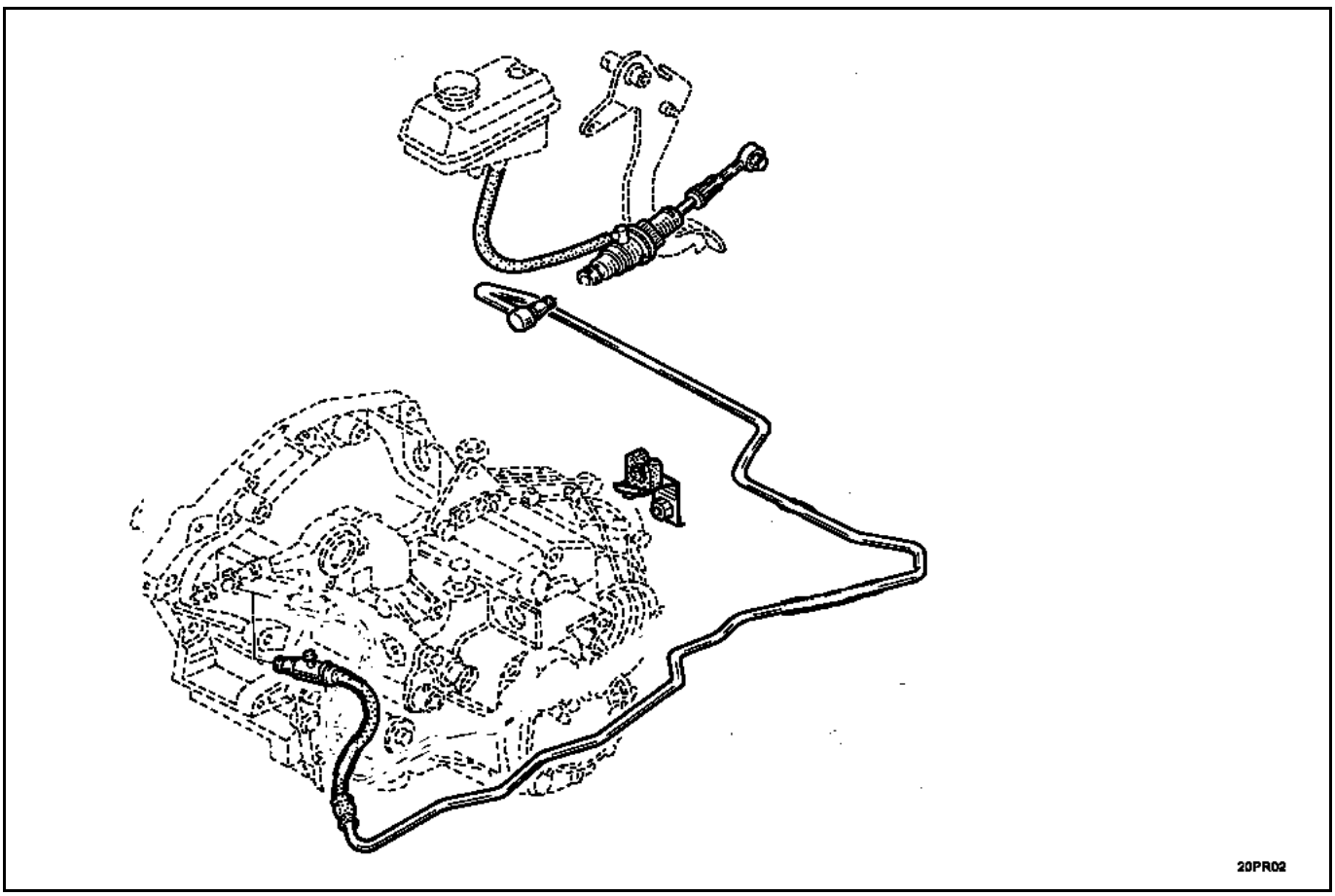

GETtheMANUALS.org

REMOVAL

In the engine compartment

Open the bonnet and remove:
– the engine cover plates,
– fuse box cover (A),

Disconnect the battery.

Remove:
– the battery bolt (B),
– the connections (C) on the air unit (only **G9T engines**),

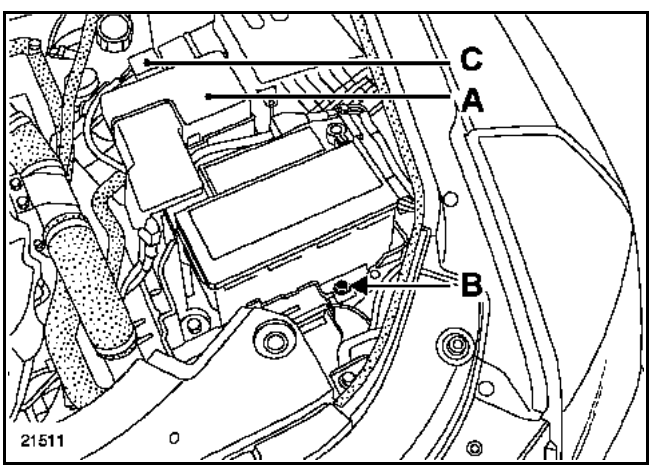

– the fuses and the fuse holder,
– the battery mounting fuse box,
– the electric wiring harness on the battery mounting at (D),

Release:
– air duct (1),
– air duct (2) with the air filter unit,

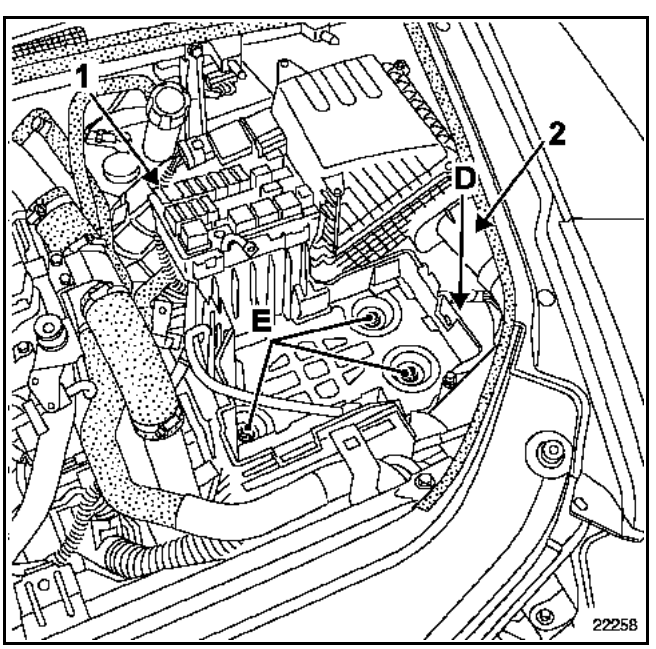

Remove battery tray bolt (E).

To do this, drill out the three tamperproof bolts using a **5 mm** diameter drill bit in the bolt shaft.

Remove the bolt using tool **Mot. 1372.**

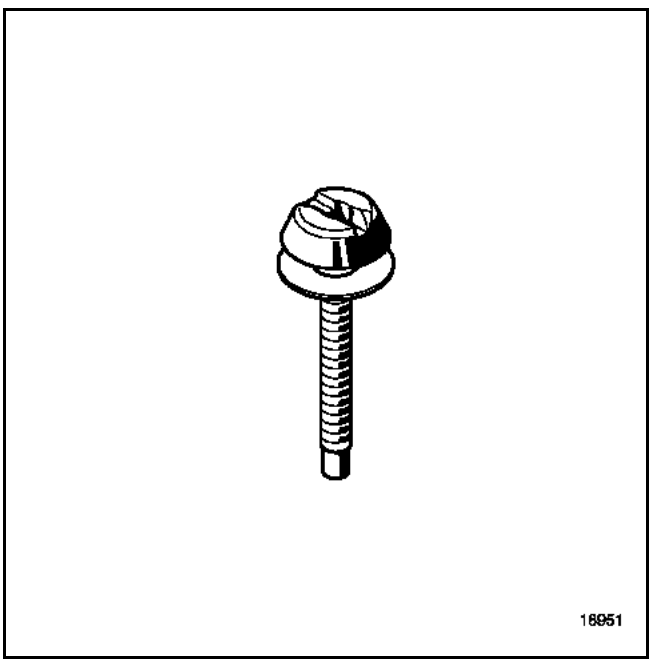

Release:
– the computer (nuts 3) to remove the computer connectors,
– the electric wiring harness on the computer tray to remove it.

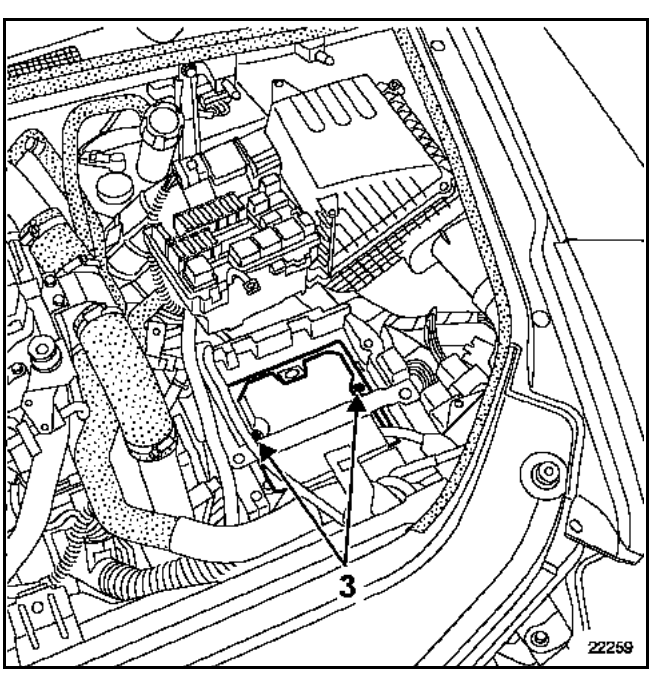

GETtheMANUALS.org

Drain the coolant in the reservoir.

Drain the brake fluid reservoir until the level is below the master cylinder supply opening.

Place a cloth under this opening then disconnect the pipe from the brake fluid reservoir and fit plugs.

Bleed the slave cylinder and operate the pedal with your hand (this empties the master cylinder and the pipe).

In the passenger compartment

Disconnect the master cylinder ball joint from the clutch pedal.

Engine compartment (contd)

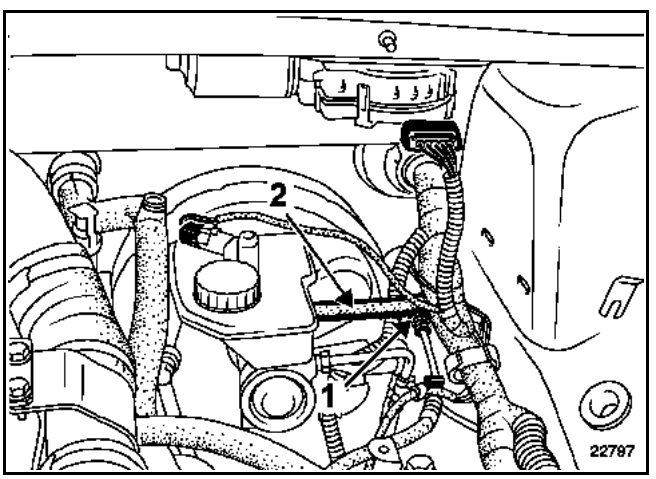

Remove the electrical harness.

Remove the master cylinder pressure sensor connectors.

Remove the master-slave connecting pipe holding clip (1) on the master.

Place a cloth under the master cylinder. Disconnect the brake pressure gauge connecting hose on the master cylinder.

Place plugs in each opening.

Remove the hose at (2).

Remove the master cylinder from the bulkhead by turning it one quarter of a turn clockwise (bayonet type mounting) using tool **Emb. 1596**.

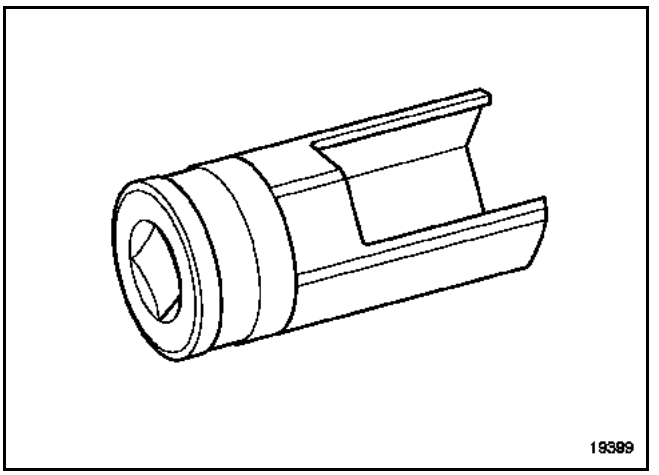

REFITTING

Check the condition of the seals.

Proceed in the reverse order to removal.

NOTE: lubricate the two clutch master cylinder supply hose ends (3) with brake fluid to facilitate fitting the brake fluid reservoir to the take-off pipe.

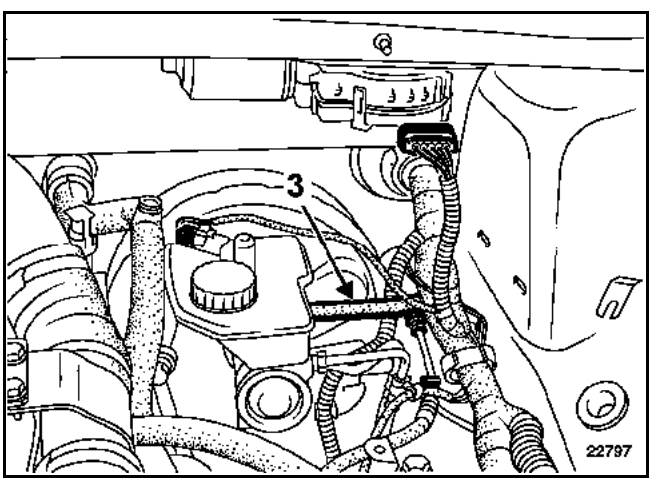

GETtheMANUALS.org

CAUTION: do not use the take-off pipe as support when fitting.

The master cylinder is fitted with a foolproofing device. There is only one possible position.

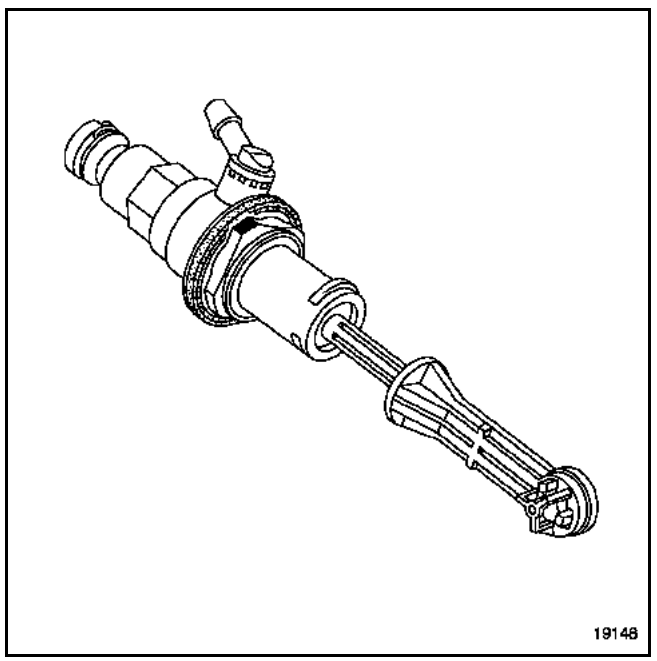

Add brake fluid to the reservoir.

Bleed the hydraulic circuit:
– remove the bleed cap,
– connect a pipe linked to a reservoir containing brake fluid to opening A,

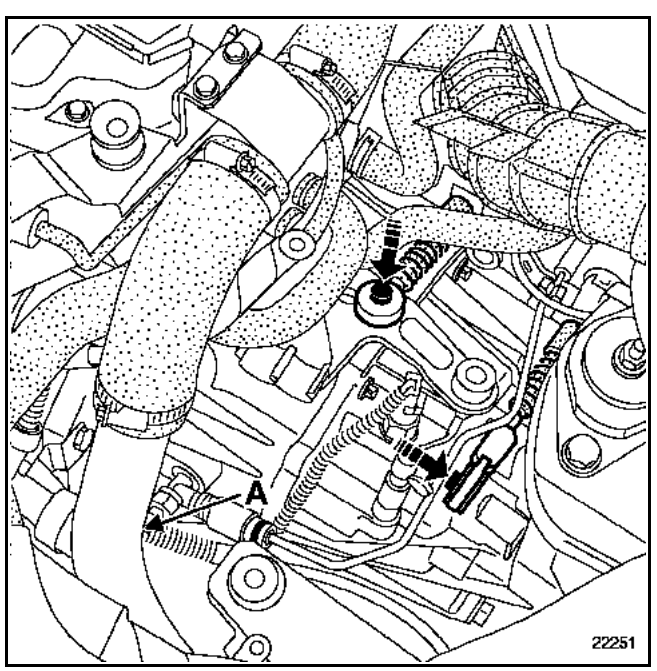

– install the bleeding device onto the brake fluid reservoir,
– operate the bleeding device,
– wait until the air is completely expelled from the hydraulic circuit.

Top up the brake fluid.

Check that the clutch system is operating correctly.

GETtheMANUALS.org

REMOVAL

Place the vehicle on a lift.

In the engine compartment

Open the bonnet and remove:
– the engine cover plates,
– fuse box cover (A),

Disconnect the battery.

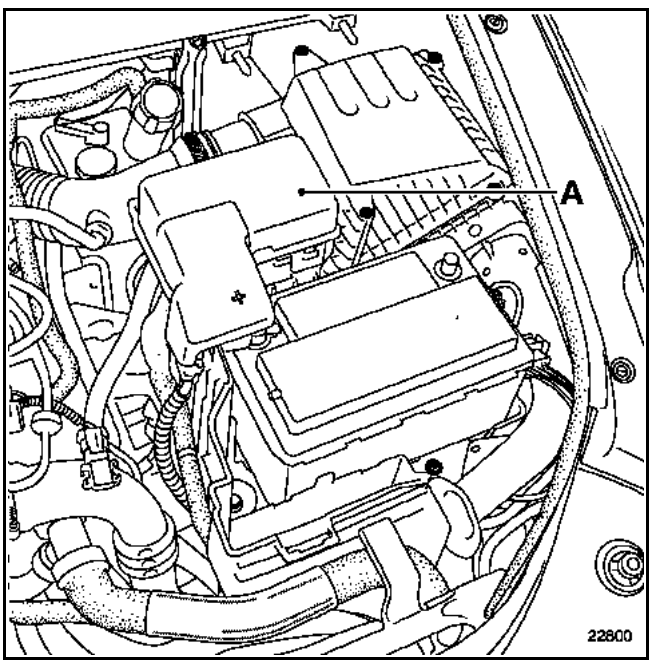

Remove:
– the catalytic converter (see **Section 19B: Exhaust Catalytic converter**),
– turbocharger (see **Section 12B: Turbocharging: Turbocharger**).

Pull off the engine heat shied mountings (1) to extract it.

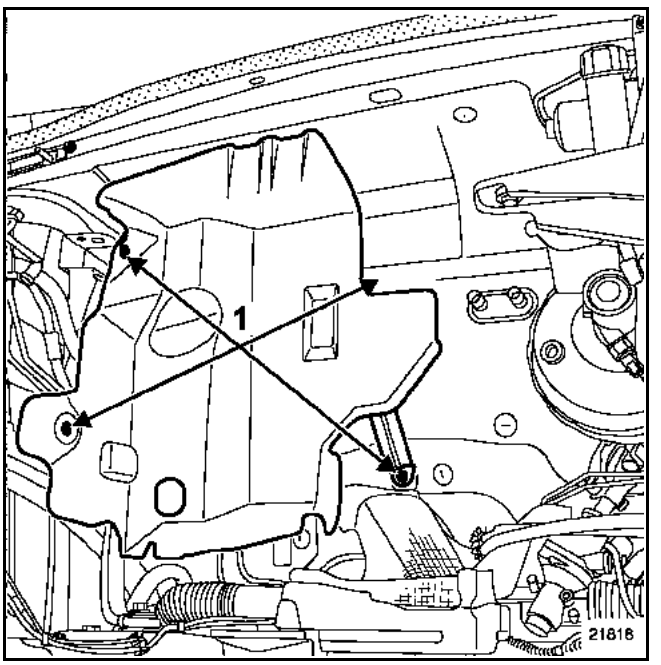

Drain the brake fluid reservoir using a syringe until the fluid level is below the level of the master cylinder supply opening.

Open bleed (D) on the slave cylinder side and pump the clutch pedal two or three times keeping the pedal in your hand (this enables emptying of the master cylinder and the pipe).

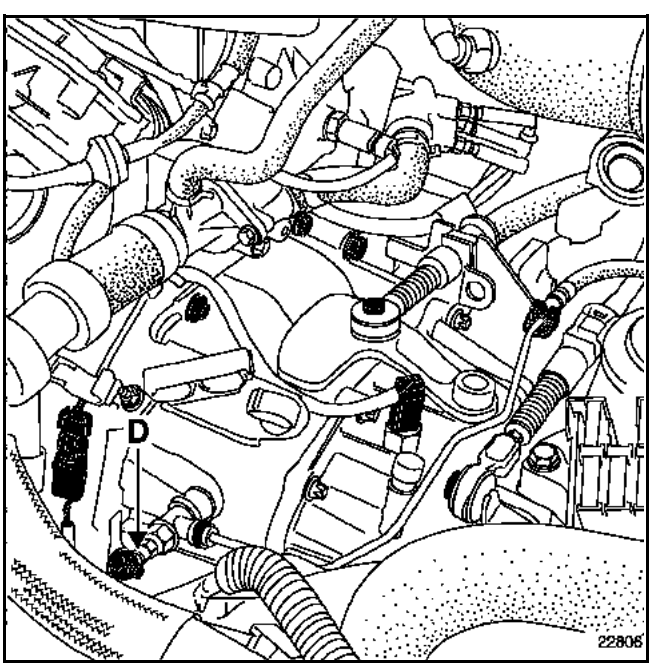

GETtheMANUALS.org

In the passenger compartment

Disconnect the master cylinder ball joint from the clutch pedal.

Engine compartment (contd)

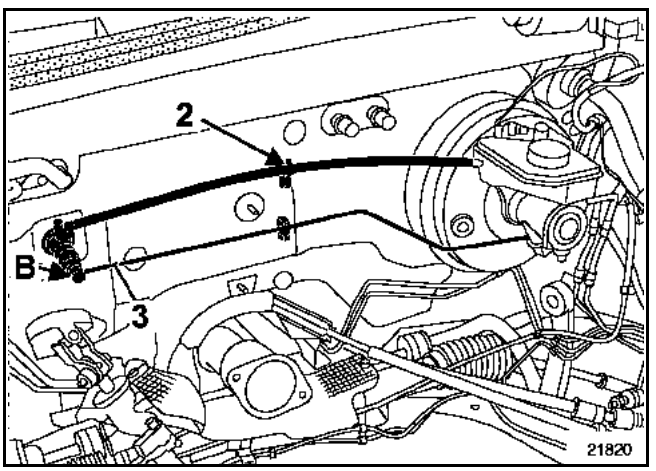

Unclip the hose connecting the brake fluid reservoir and the master cylinder at (2).

Place a cloth under the master cylinder.

Release retaining clip (B) of the clutch control pipe (3) and remove it.

Remove the master cylinder from the bulkhead by turning it one quarter of a turn clockwise (bayonet type mounting) using tool **Emb. 1596**.

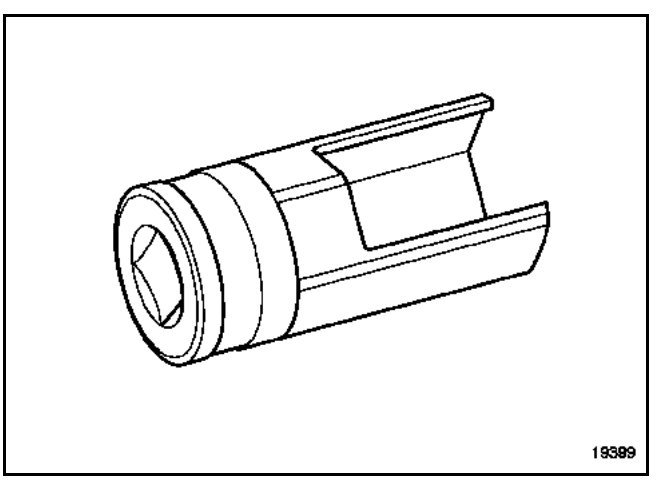

Remove master cylinder take-off hose (C).

REFITTING

Check the condition of the seals.

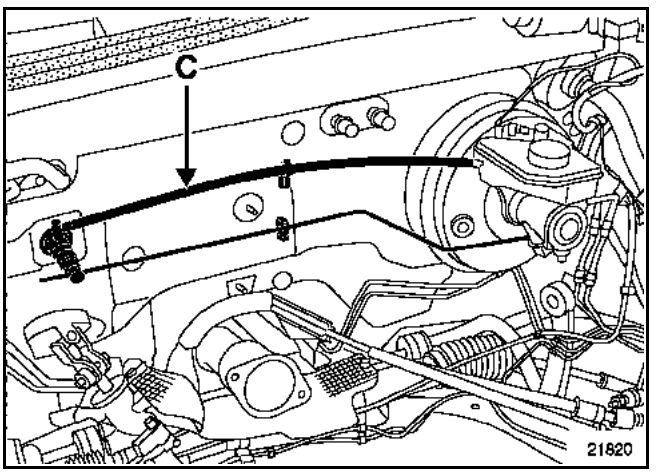

Proceed in the reverse order to removal.

NOTE: lubricate the clutch master cylinder supply hose end (C) with brake fluid to enable the brake fluid reservoir be fitted to the take-off pipe.

CAUTION: do not use the take-off pipe as support when fitting.

The master cylinder is fitted with a foolproofing device. There is only one possible position.

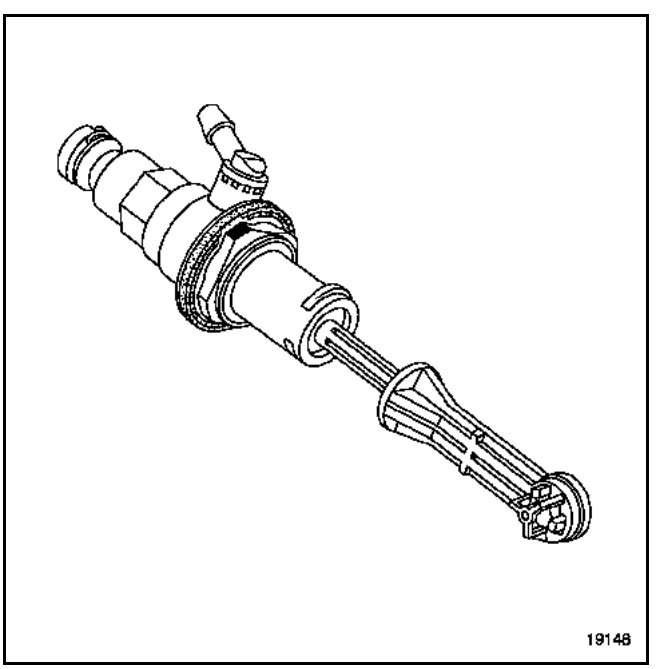

GETtheMANUALS.org

Add brake fluid to the reservoir.

Bleed the hydraulic circuit:
– remove the bleed cap,
– connect a pipe linked to a reservoir containing brake fluid to opening (D),

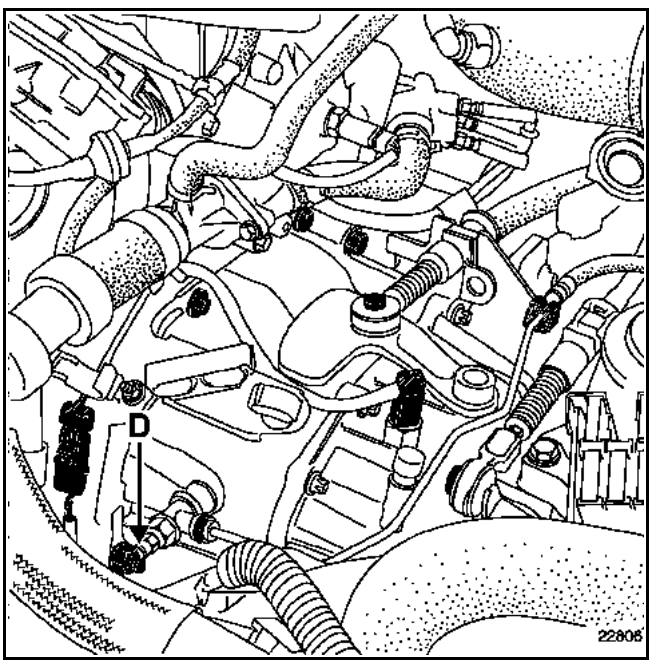

– install the bleeding device onto the brake fluid reservoir,
– operate the bleeding device,
– wait until the air is completely expelled from the hydraulic circuit.

Top up the brake fluid.

Check that the clutch system is operating correctly.

In the passenger compartment

Connect the master cylinder ball joint to the clutch pedal.

NOTE: remove the clutch pedal sensors to position them (see **Section 37A: Mechanical components control Clutch Pedal**).

Engine compartment (contd)

Fit:
– the heat shield,
– the turbocharger.

IMPORTANT

Fit:
– the turbocharger to the exhaust manifold,
– the oil supply pipe to the turbocharger,
– the return pipe to the cylinder block.

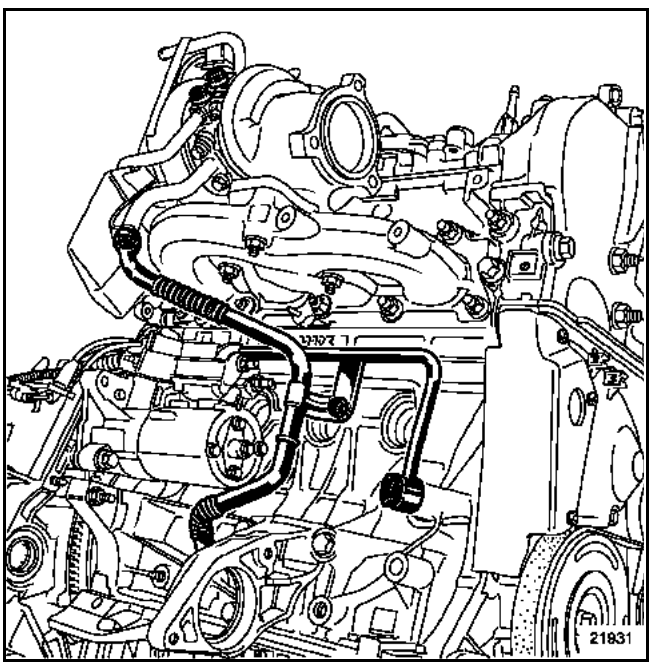

Tighten the turbocharger/ air exchanger clip to position the turbocharger.

NOTE: check the turbocharger sealing (see **Section 12A: Turbocharging Turbocharger**).

Position the catalytic converter by tightening the catalyser struts and then tightening the turbocharger and exhaust pipe clamps (see **Section 19B: Exhaust Catalytic Converter**).

IMPORTANT: do not forget to carry out the programming needed for the vehicle to operate correctly after connecting the battery (refer to **Section 80A**).

GETtheMANUALS.org

REMOVAL

In the engine compartment

Open the bonnet and remove:
– the engine cover plates,
– fuse box cover (A),

Disconnect the battery.

Remove:
– the battery, bolt (B),
– the connections (C) on the air unit,

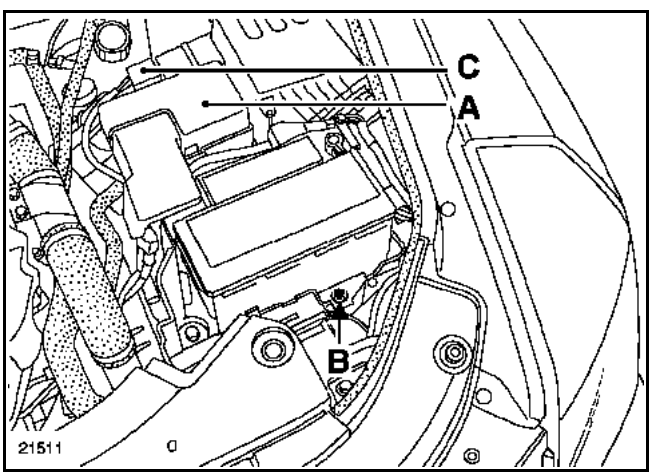

Drain the brake fluid reservoir until the fluid level is below the level of the master cylinder supply opening.

Open bleed (D) on the slave cylinder side and pump the clutch pedal two or three times keeping the pedal in your hand (this enables emptying of the master cylinder and the pipe).

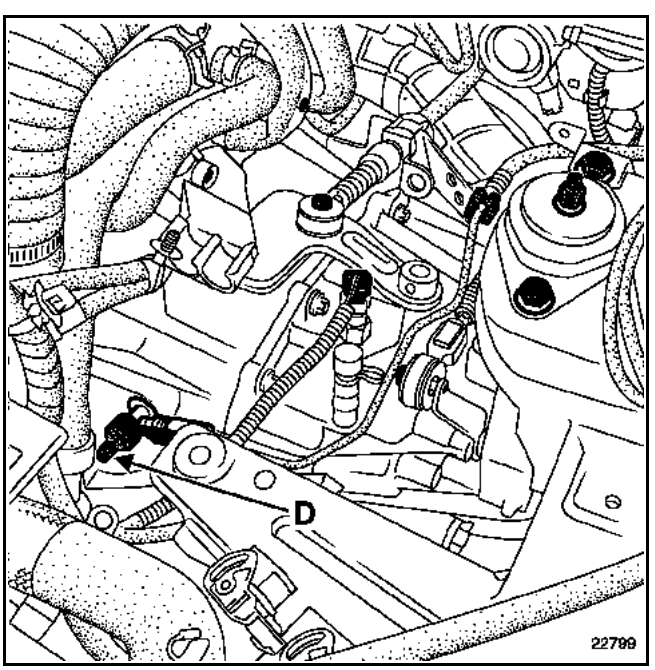

In the passenger compartment

Disconnect the master cylinder ball joint from the clutch pedal.

Engine compartment (contd)

Remove rubber rail protector (1) (see **Section 13B: Diesel injection Rail Protector**).

THE RAIL PROTECTOR PERFORMS A SAFETY FUNCTION AND REQUIRES PARTICULAR ATTENTION WHEN BEING FITTED.

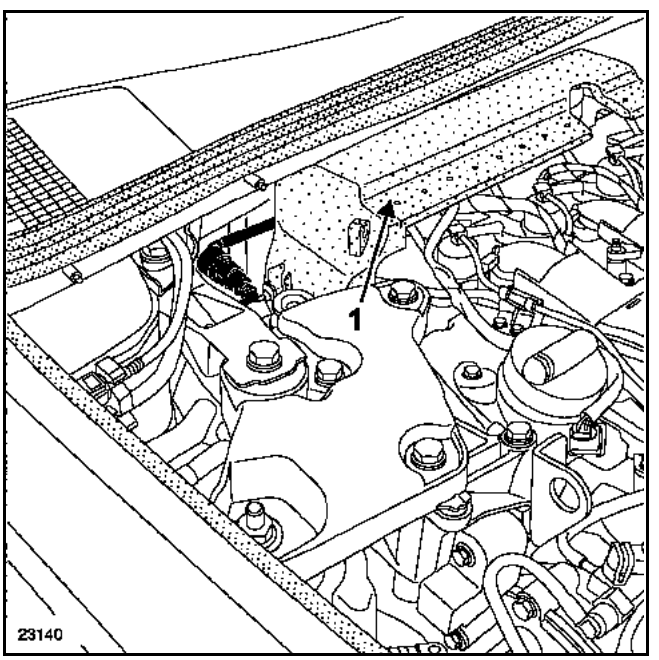

GETtheMANUALS.org

Unclip the hose connecting the brake fluid reservoir and the master cylinder at (2).

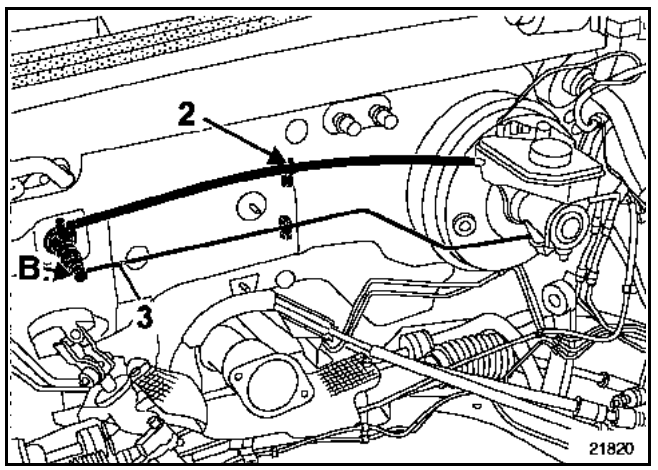

Place a cloth under the master cylinder.

Release clutch control pipe retaining clip (3) at (B) and remove it.

Remove the master cylinder from the bulkhead by turning it one quarter of a turn clockwise (bayonet type mounting) using tool **Emb. 1596**.

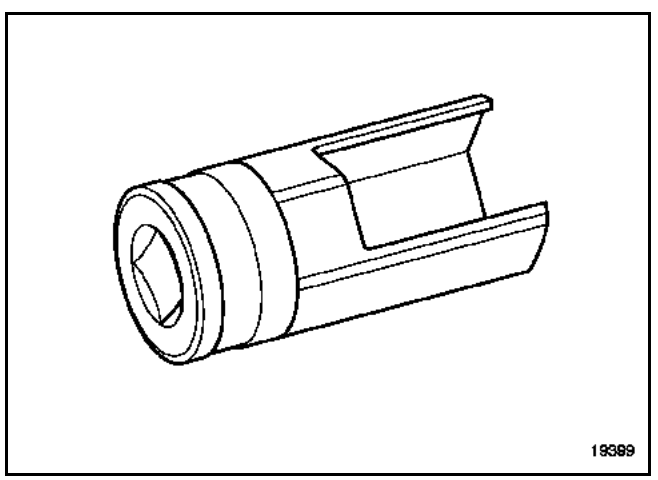

Remove master cylinder take-off hose (C).

REFITTING

Check the condition of the seals.

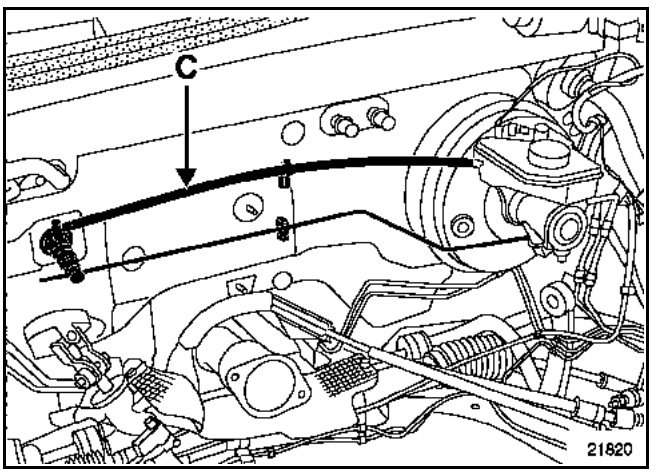

Proceed in the reverse order to removal.

In the passenger compartment

Connect the master cylinder ball joint to the clutch pedal.

NOTE: remove the clutch pedal sensors to position them (see **Section 37A: Mechanical components control Clutch Pedal**).

To refit the rail protector (see **Section 13B: Diesel Injection: Rail Protector**).

IF THE NOTES IN SECTION 13B ARE NOT ADHERED TO THIS COULD HAVE SERIOUS CONSEQUENCES ON SAFETY CONDITIONS.

NOTE: lubricate the clutch master cylinder supply hose end (C) with brake fluid to enable the brake fluid reservoir to be fitted to the take-off pipe.

GETtheMANUALS.org

CAUTION: do not use the take-off pipe as support when fitting.

The master cylinder is fitted with a foolproofing device. There is only one possible position.

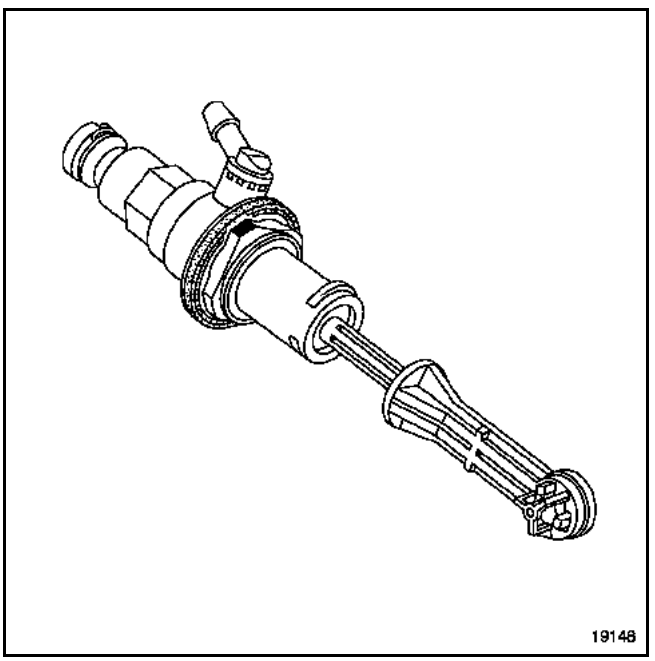

Add brake fluid to the reservoir.

Bleed the hydraulic circuit:
– remove the bleed cap,
– connect a pipe linked to a reservoir containing brake fluid to opening (D),

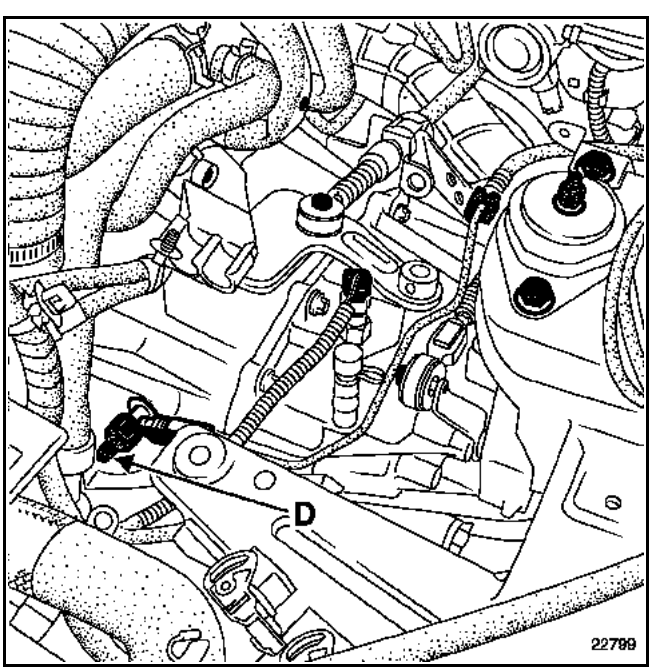

– install the bleeding device onto the brake fluid reservoir,
– operate the bleeding device,
– wait until the air is completely expelled from the hydraulic circuit.

Top up the brake fluid.

Check that the clutch system is operating correctly.

IMPORTANT: do not forget to carry out the programming needed for the vehicle to operate correctly after connecting the battery (refer to **Section 80A**).

GETtheMANUALS.org

TIGHTENING TORQUE (in daNm)	
Retaining bolt of the slave cylinder on the clutch housing	0.9

REMOVAL

The clutch slave cylinder can only be removed after the gearbox has been removed.

Disconnect the master-slave connecting pipe by releasing clip (2) located on union (B).

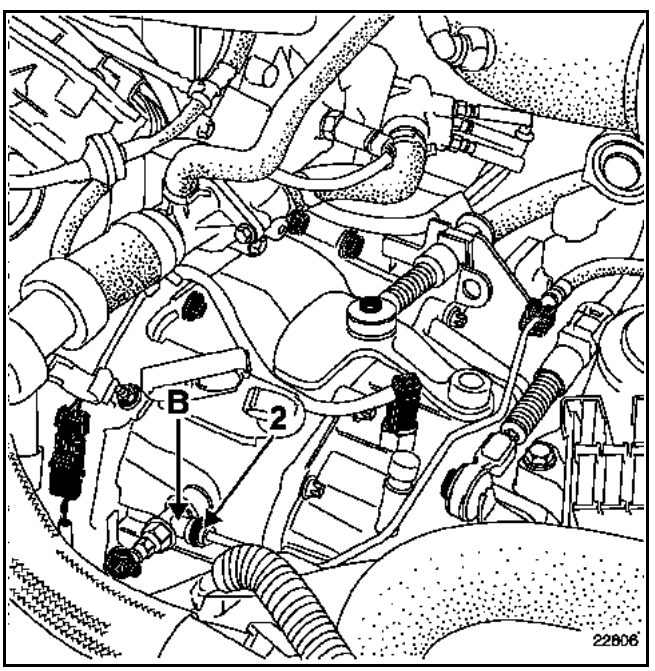

Remove:
– the union (C) of the clutch slave cylinder, by removing clip (3),

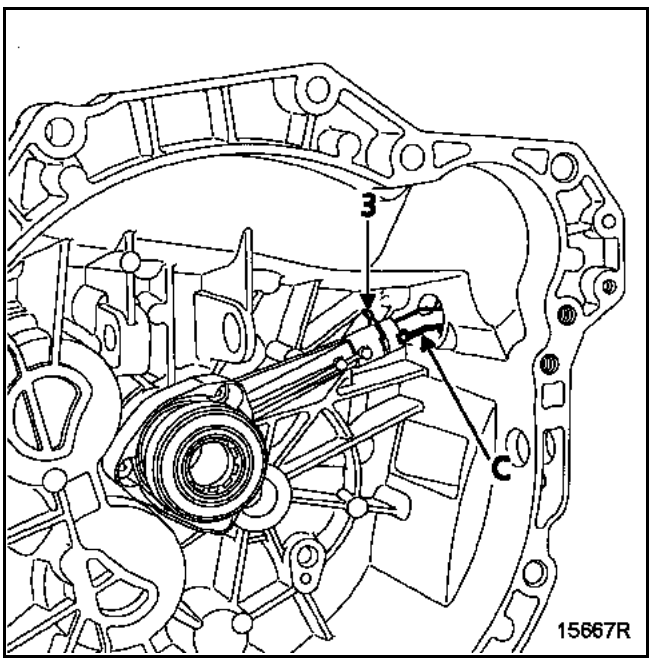

– the three slave cylinder mounting bolts (B) then remove it.

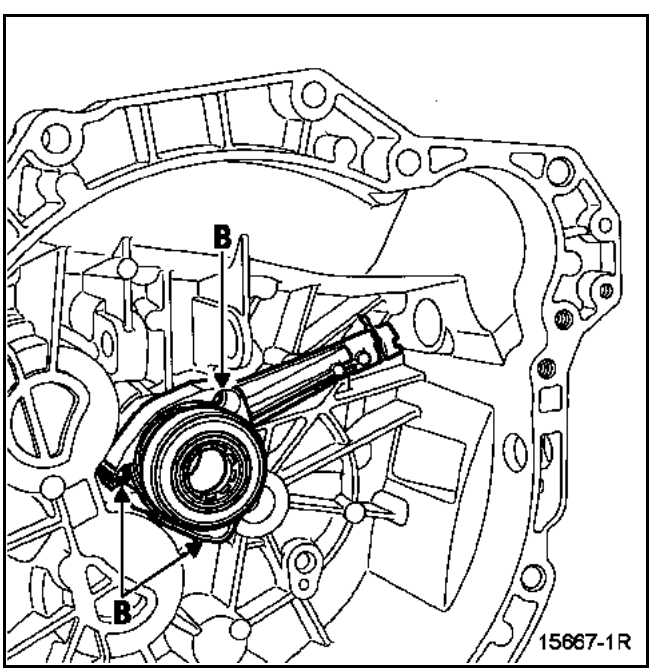

WARNING: never operate the system when the slave cylinder is removed (even if it is connected to the clutch pedal). There is a risk that the hydraulic piston and the stop will be ejected from the slave cylinder.

GETtheMANUALS.org

REFITTING

Check the condition of the seals.

Proceed in the reverse order to removal.

Torque tighten the two slave cylinder mounting bolts (B) to **0.9 daNm**.

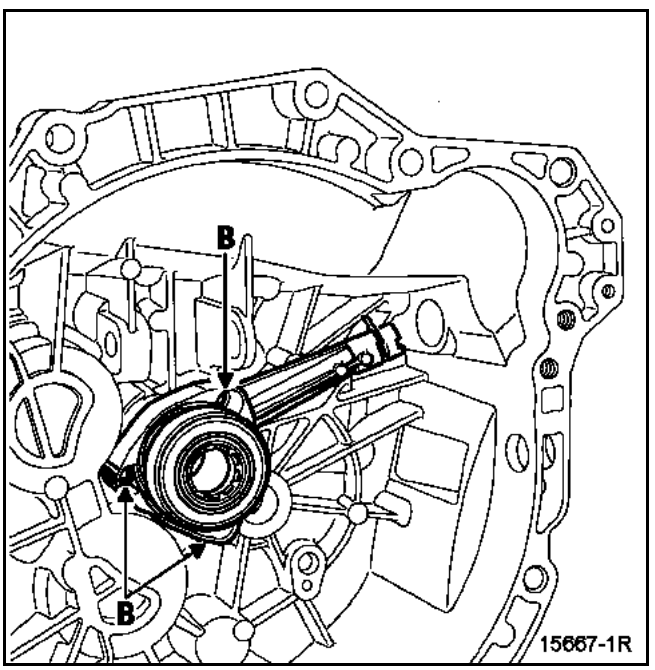

NOTE: to avoid damaging the slave cylinder, do not coat the gearbox output shaft with grease.

NOTE: to avoid leaks, replace the slave cylinder after replacing the clutch mechanism.

Add brake fluid to the reservoir.

Bleed the hydraulic circuit:
– connect a pipe linked to a reservoir containing brake fluid to opening (C),
– fit the bleeding device,
– operate the bleeding device,
– wait until the air is completely expelled from the hydraulic circuit.

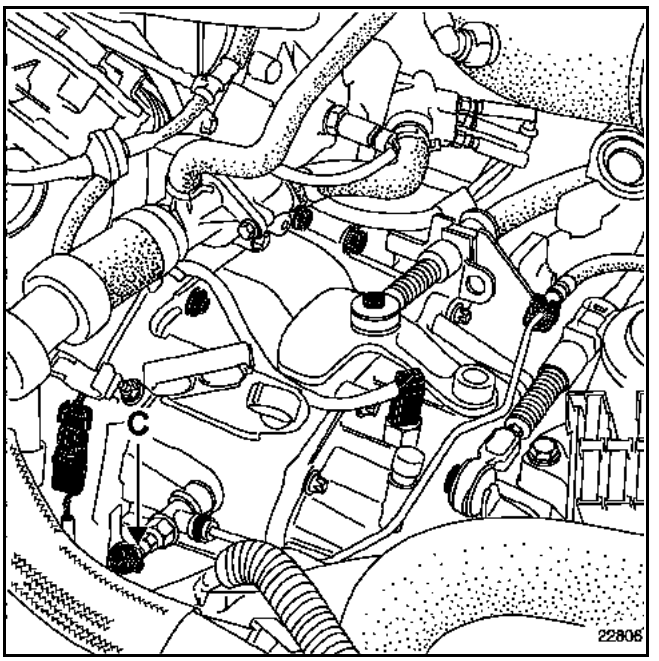

Top up the brake fluid reservoir.

Check that the clutch system is operating correctly.

IMPORTANT: do not forget to carry out the programming needed for the vehicle to operate correctly after connecting the battery (refer to **Section 80A**).

GETtheMANUALS.org

REMOVAL

Open the bonnet and remove:
– the engine cover plates,
– the fuse box cover (A),

Disconnect the battery.

Remove:
– the battery, bolt (B),
– the connections (C) on the air unit (only on **G9T engines**),

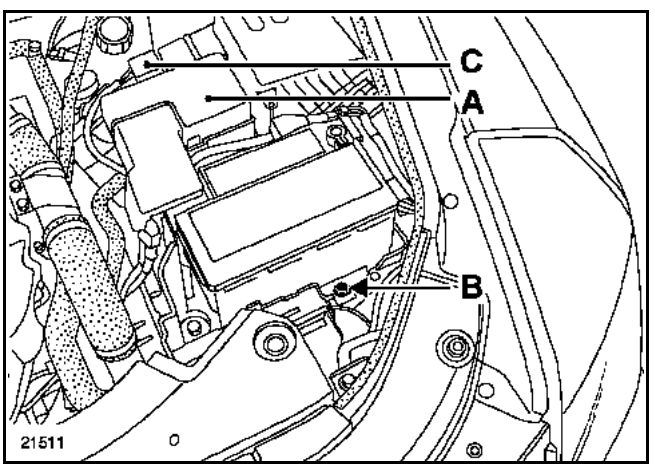

– the fuses and the fuse holder,
– the battery mounting fuse box,
– the electric wiring harness on the battery mounting at (D),

Release:
– the air duct (1),
– the air duct (2) with the air filter unit,

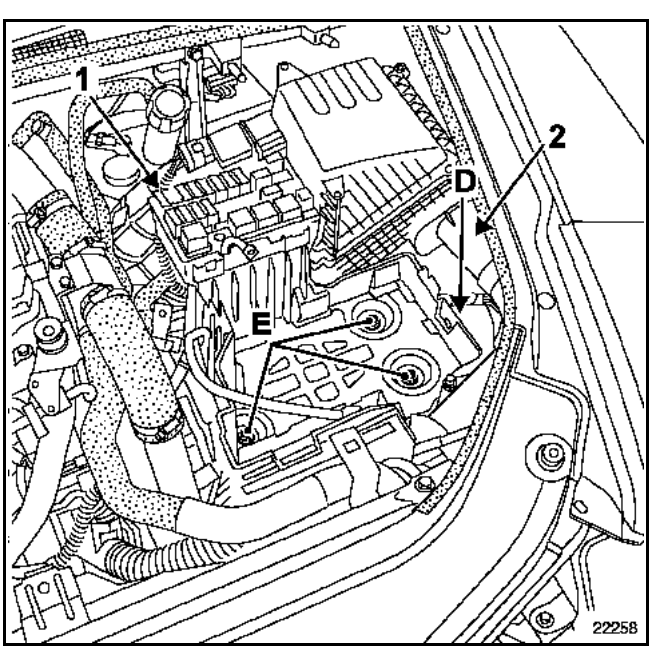

Remove the battery tray bolt (E).

To do this, drill out the three tamperproof bolts using a 5 mm diameter drill bit in the bolt shaft.

Remove the bolt using tool **Mot. 1372**.

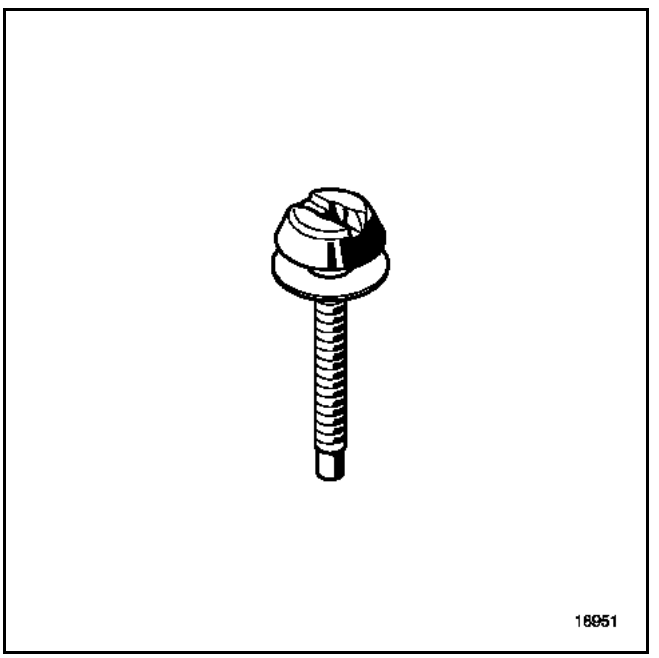

Release:
– the computer (nuts 3) to remove the computer connectors,
– the electric wiring harness on the computer tray to remove it.

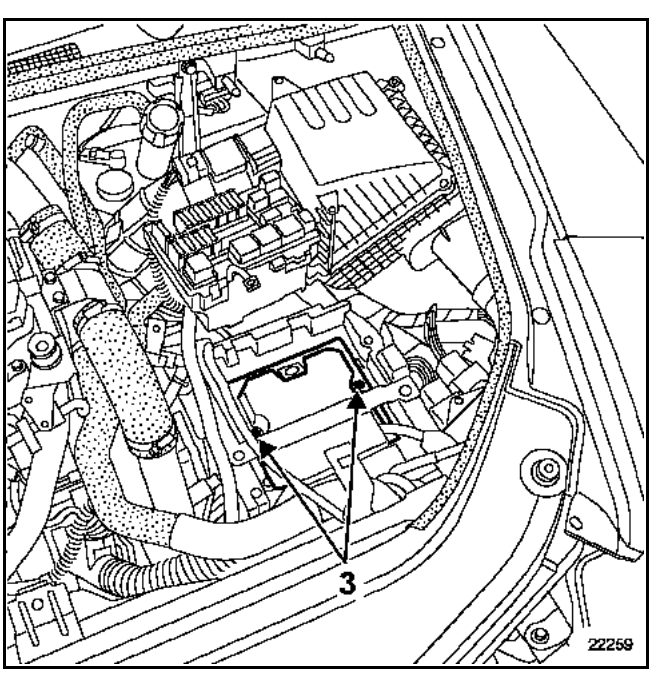

GETtheMANUALS.org

Drain the brake fluid reservoir with a syringe until the fluid level is below the level of the master cylinder supply opening.

Connect a pipe linked to a reservoir to opening (A) . Open bleed screw on the slave cylinder side and pump the clutch pedal two or three times keeping the pedal in your hand (this helps to empty the master cylinder and the pipe).

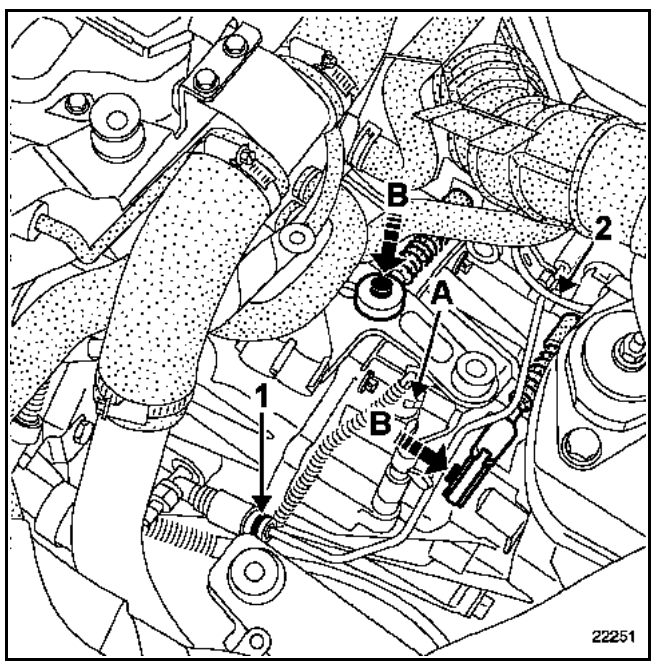

Place a cloth under the slave cylinder supply openings. Disconnect the brake fluid reservoir pipe. Fit plugs.

Release the master-slave connector pipes retaining clips (1, 2 and 3) on the master and slave cylinders.

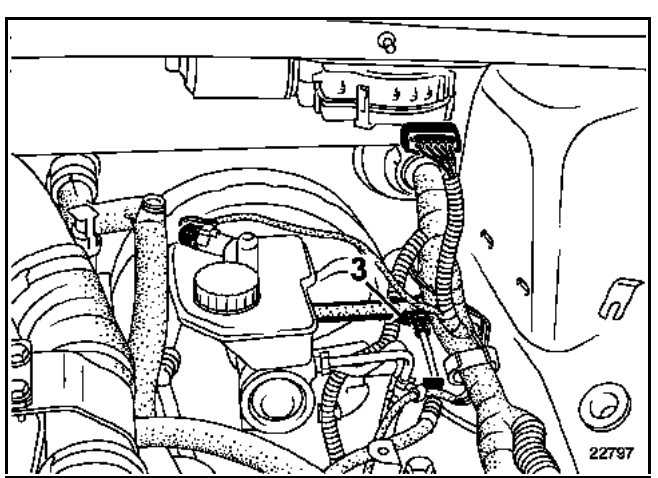

Place a cloth under each opening, then disconnect the pipe.

Carefully remove the master-slave connecting pipe taking care not to damage anything.

REFITTING

Check the condition of the seals.

Proceed in the reverse order to removal.

WARNING

When refitting:
– do not damage the various pipes,
– make sure they are connected correctly,
– position the various mounting clips correctly.

Add brake fluid to the reservoir.

Bleed the hydraulic circuit:
– connect a pipe linked to a reservoir containing brake fluid to opening (C),
– install the bleeding device onto the brake fluid reservoir,
– operate the bleeding device,
– open the bleed screw,
– wait until the air is completely expelled from the hydraulic circuit.

Top up the brake fluid reservoir.

Check that the clutch system is operating correctly.

IMPORTANT: do not forget to carry out the programming needed for the vehicle to operate correctly after connecting the battery (refer to **Section 80A**).

GETtheMANUALS.org

REMOVAL

Place the vehicle on a lift.

In the engine compartment

Open the bonnet and remove:
– the engine cover plates,
– the fuse box cover (A),

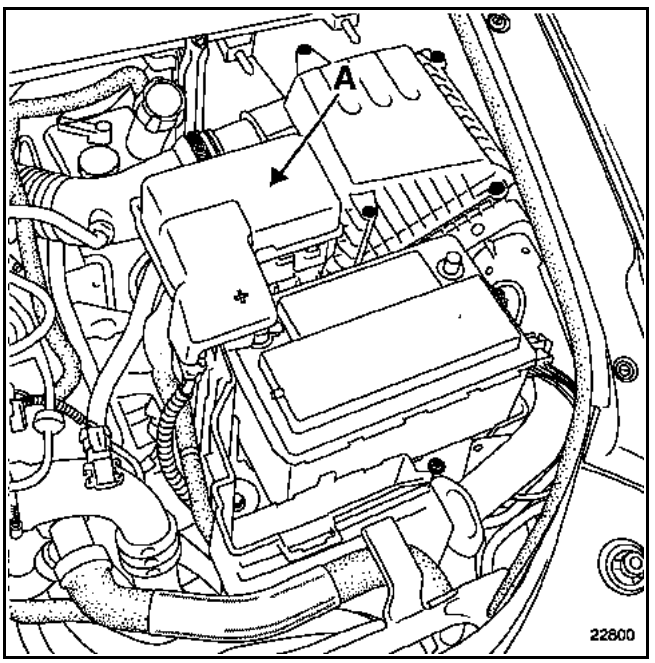

Disconnect the battery.

Drain the brake fluid reservoir using a syringe until the fluid level is below the level of the master cylinder supply opening.

Connect a pipe linked to a reservoir to opening (B).

Open the bleed screw on the slave cylinder side and pump the clutch pedal two or three times keeping the pedal in your hand (this enables emptying of the master cylinder and the pipe).

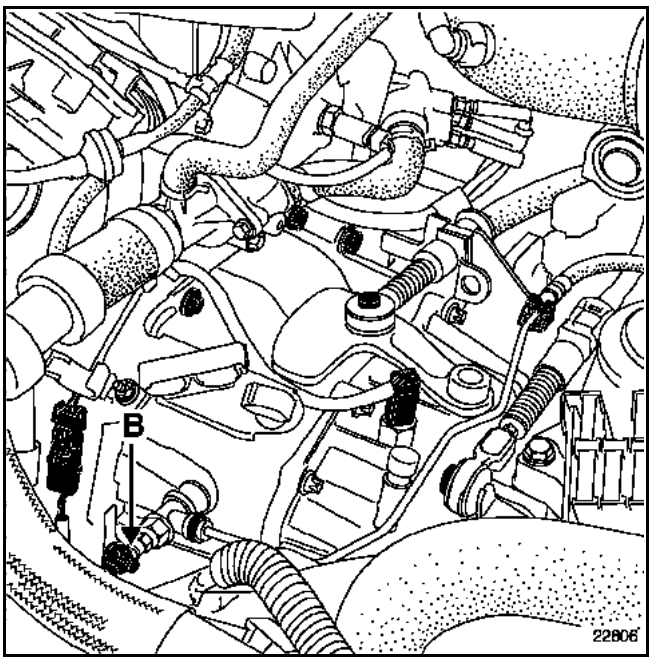

Remove:
– the catalytic converter (see **Section 19B: Exhaust: Catalytic Converter**),
– the turbocharger (see **Section 12B: Turbocharging: Turbocharger**),
– the heat shield.

Remove the engine heat shield mountings (1).

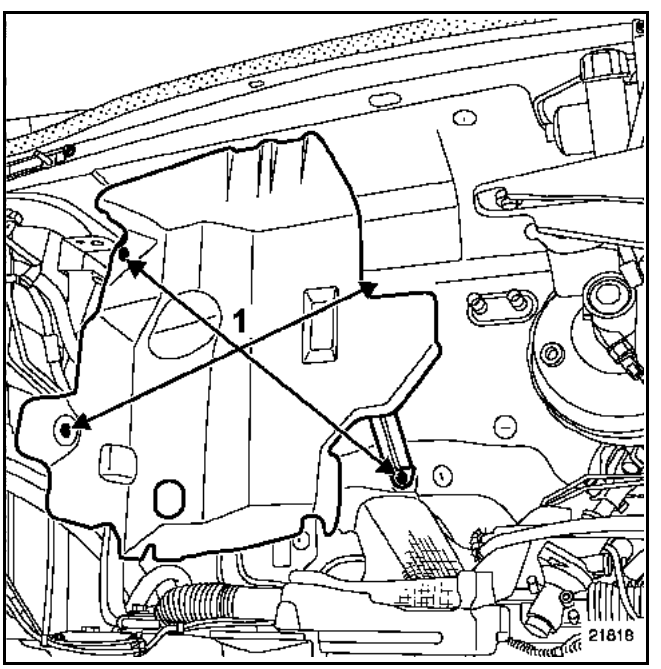

GETtheMANUALS.org

In the passenger compartment

Disconnect the master cylinder ball joint from the clutch pedal.

Engine compartment (contd)

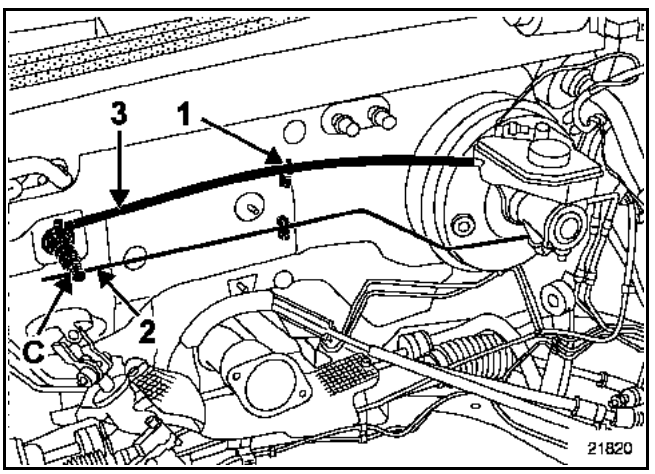

Unclip the master cylinder supply hose at (1).

Place a cloth under the master cylinder.

Release clutch control pipe (2) retaining clip at (C) and remove it.

Remove the master cylinder from the bulkhead by turning it one quarter of a turn clockwise (bayonet type mounting) using tool **Emb. 1596**.

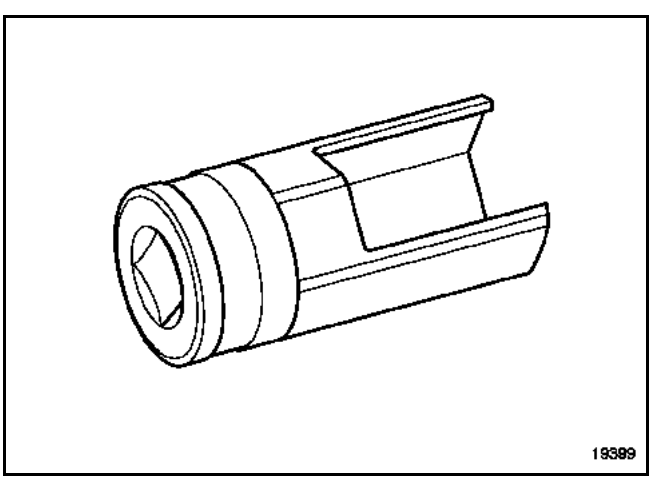

Remove the master cylinder supply hose (3).

REFITTING

Proceed in the reverse order to removal.

NOTE: lubricate the two clutch master cylinder supply hose ends (4) with brake fluid to fit the brake fluid reservoir to the take-off pipe.

CAUTION: do not use the take-off pipe as support when fitting.

The master cylinder is fitted with a foolproofing device. There is only one possible position.

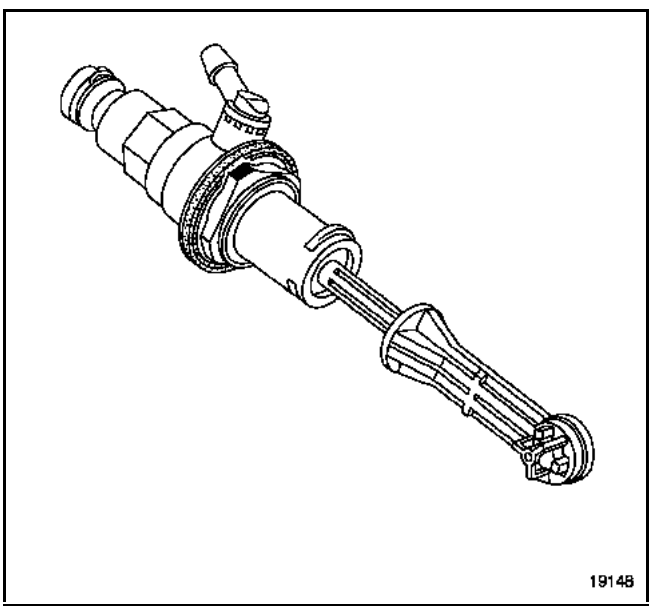

Add brake fluid to the reservoir.

Bleed the hydraulic circuit:
– remove the bleed cap,
– connect a pipe linked to a reservoir containing brake fluid to opening (D),

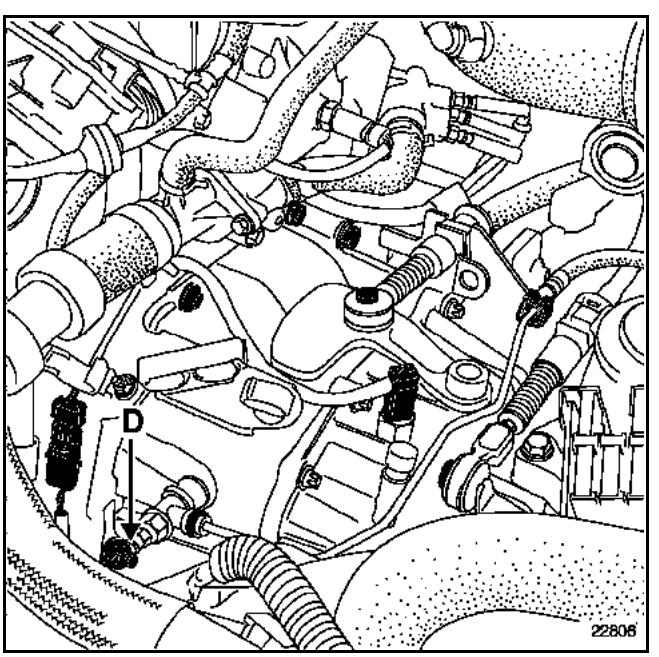

GETtheMANUALS.org

– install the bleeding device onto the brake fluid reservoir,
– operate the bleeding device,
– wait until the air is completely expelled from the hydraulic circuit.

Top up the brake fluid.

Check that the clutch system is operating correctly.

In the passenger compartment

Connect the master cylinder ball joint to the clutch pedal.

NOTE: remove the clutch pedal sensors to position them (see **Section 37A: Mechanical components control: Clutch Pedal**).

Engine compartment (contd)

Fit:
– the heat shield,
– the turbocharger.

IMPORTANT

Fit:
– the turbocharger to the exhaust manifold,
– the oil supply pipe on the turbocharger,
– the return pipe to the cylinder block.

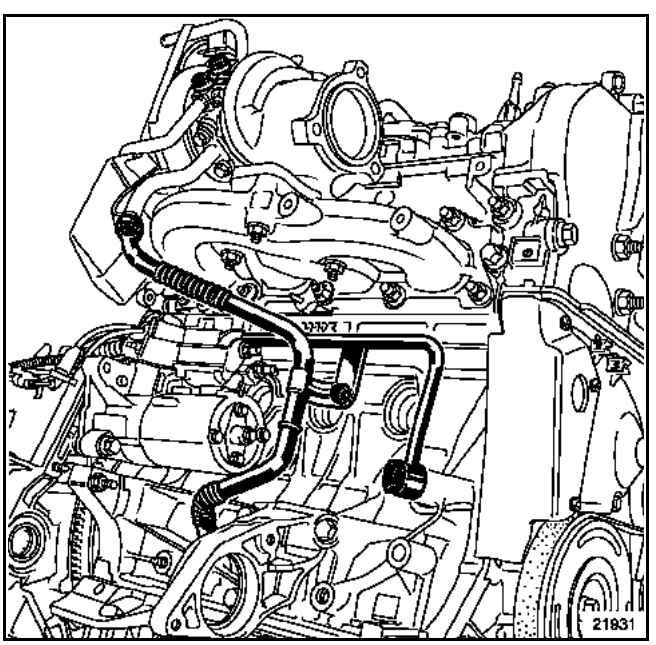

Tighten the turbocharger/air exchanger clip to position the turbocharger.

NOTE: check the turbocharger sealing (see **Section 12A: Turbocharging:Turbocharger**).

Position the catalytic converter by tightening the catalyser struts and then tightening the turbocharger and exhaust pipe clamps. (see **Section 19B: Exhaust: Catalytic Converter**).

IMPORTANT: do not forget to carry out the programming needed for the vehicle to operate correctly after connecting the battery (refer to **Section 80A**).

GETtheMANUALS.org

REMOVAL

Place the vehicle on a lift.

Open the bonnet and remove:
– the engine cover plates,
– the fuse box cover (A),

Disconnect the battery.

Remove:
– the battery bolt (B),

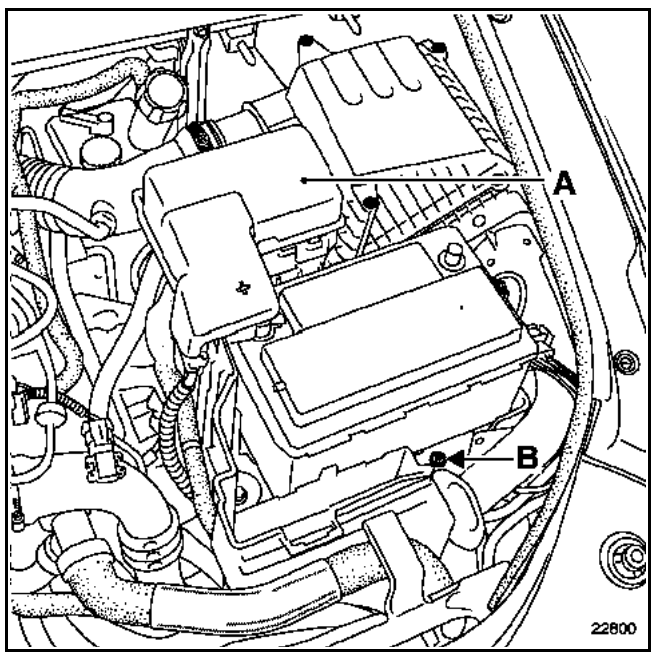

– the battery mounting fuse box,
– the electric wiring harness on the battery mounting at (D),
– the air duct (1) and (2),

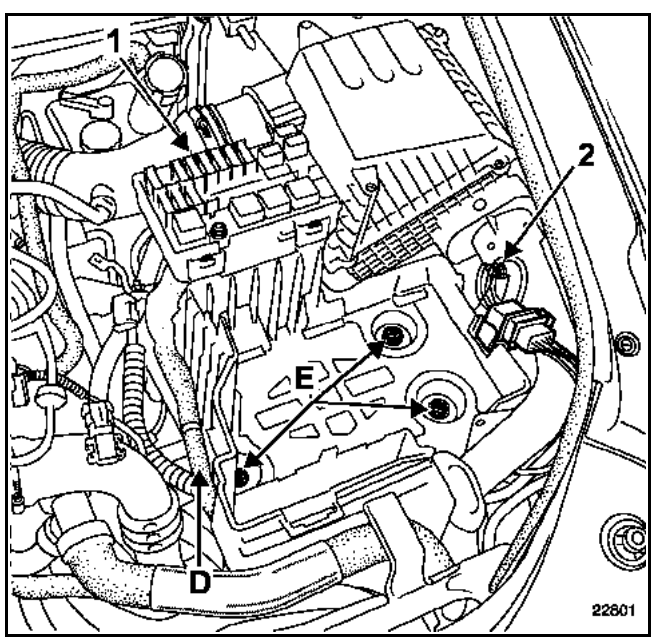

– the battery mounting bolt (E).

To do this, drill out the three tamperproof bolts using a 5 mm diameter drill bit in the bolt shaft.

Remove the bolt using tool Mot. 1372.

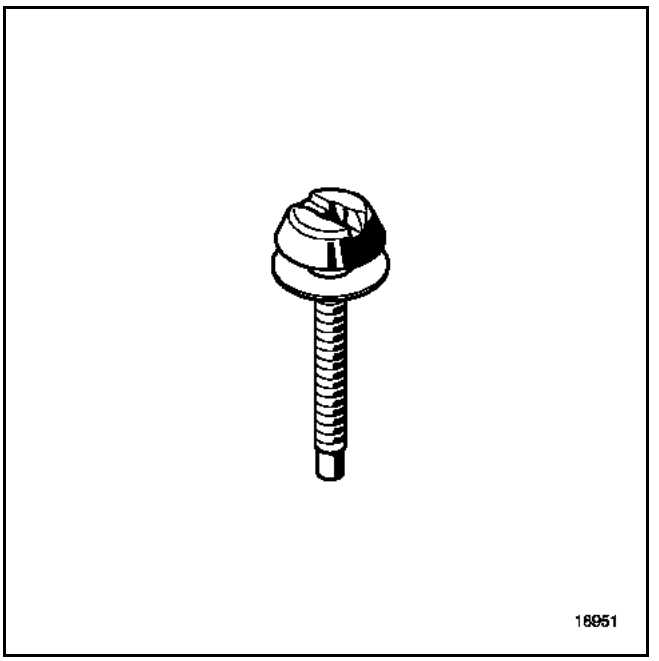

Release:
– the computer (nuts 3) to remove the computer connectors,
– the electric wiring harness on the computer tray to remove it.

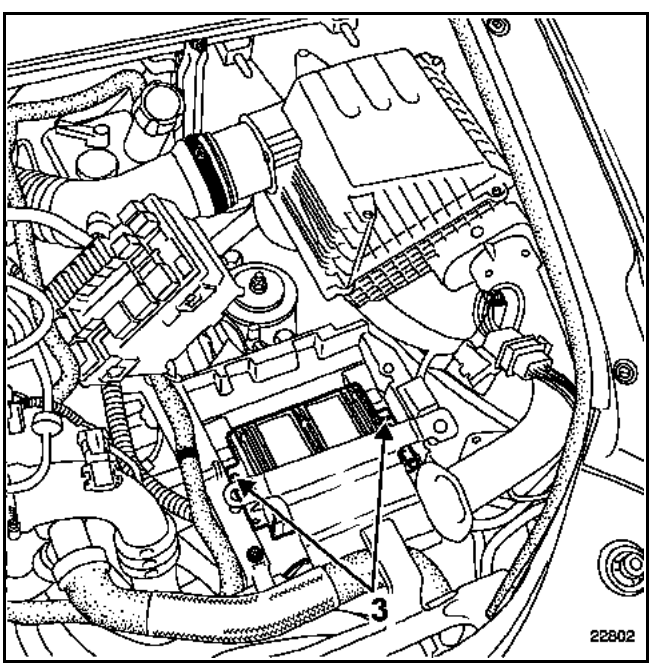

GETtheMANUALS.org

Drain the brake fluid reservoir using a syringe until the fluid level is below the level of the master cylinder supply opening.

Connect a pipe linked to a reservoir to opening (A).

Open the bleed screw on the slave cylinder side and pump the clutch pedal two or three times keeping the pedal in your hand (this enables emptying of the master cylinder and the pipe).

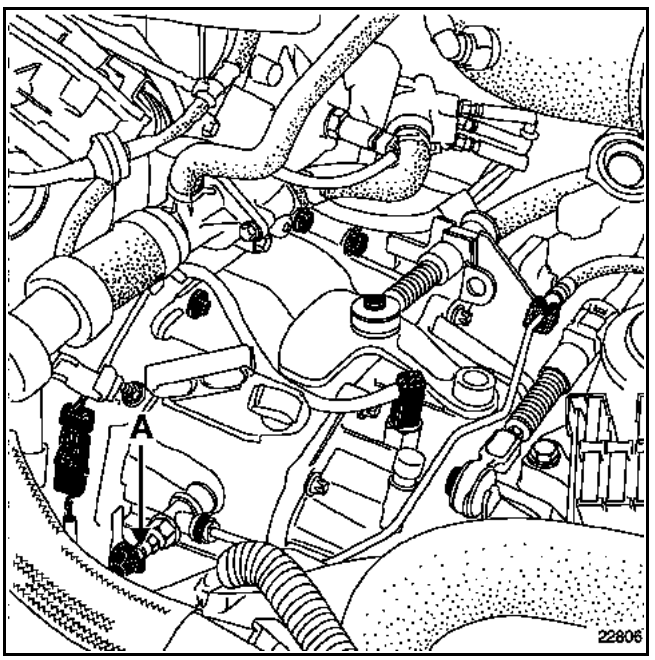

Remove:
– the catalytic converter (see **Section 19B: Exhaust: Catalytic Converter**),
– the turbocharger (see **Section 12B: Turbocharging: Turbocharger**).
– the heat shield.

Remove the engine heat shield mountings (1).

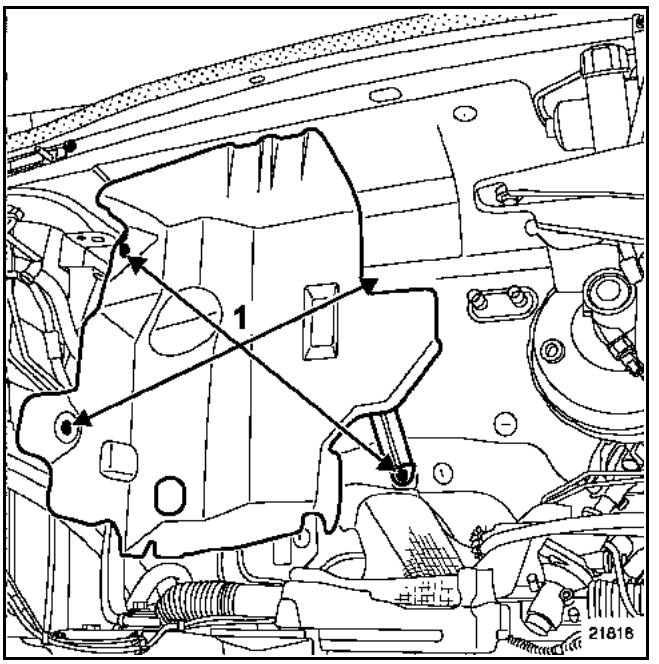

Place a cloth under the master cylinder.

Release:
– the clutch control pipe from the clip at (B),
– clutch control pipe (2) retaining clip at (C) and remove it.

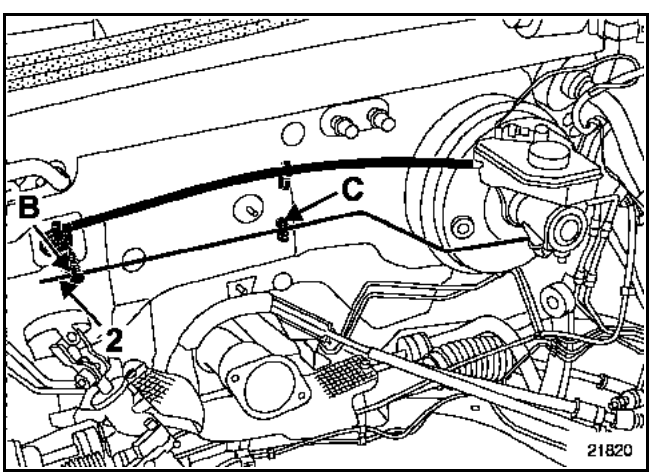

GETtheMANUALS.org

Release the clutch control pipe from the clip at (D).

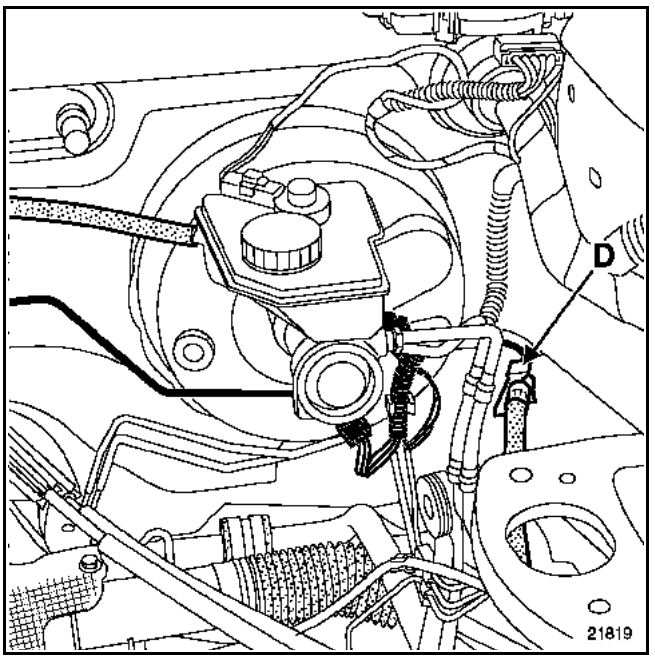

Place a cloth under each opening, then disconnect the pipe.

Release the clip at (2).

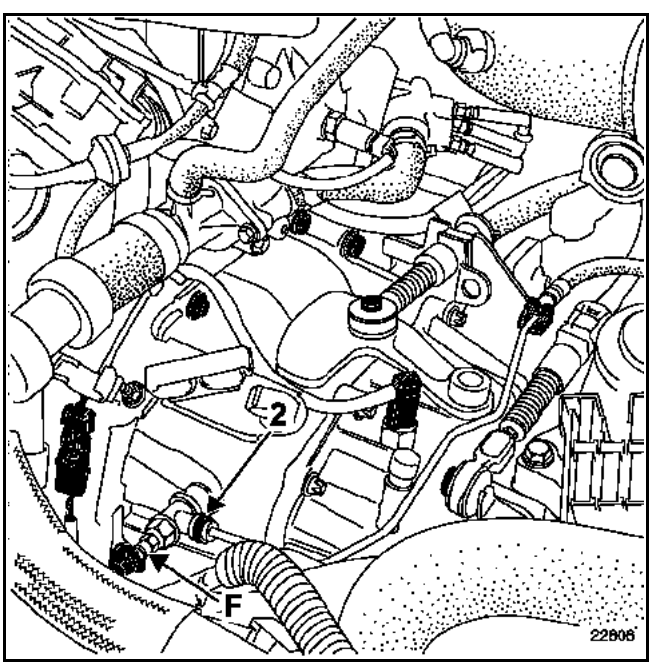

Carefully remove the master-slave connecting pipe taking care not to damage anything.

REFITTING

Check the condition of the seals.

Proceed in the reverse order to removal.

WARNING:

When refitting:
– do not damage the various pipes,
– take care to connect them correctly,
– position the various mounting clips correctly.

Add brake fluid to the reservoir.

Bleed the hydraulic circuit:
– Connect a pipe linked to a tank containing brake fluid to opening (F),
– install the bleeding device onto the brake fluid reservoir,
– operate the bleeding device,
– open the bleed screw,
– wait until the air is completely expelled from the hydraulic circuit.

Top up the brake fluid reservoir.

Check that the clutch system is operating correctly.

IMPORTANT: do not forget to carry out the programming needed for the vehicle to operate correctly after connecting the battery (refer to **Section 80A**).

GETtheMANUALS.org

REMOVAL

In the engine compartment

Open the bonnet and remove:
– the engine cover plates,
– the fuse box cover (A),

Disconnect the battery.

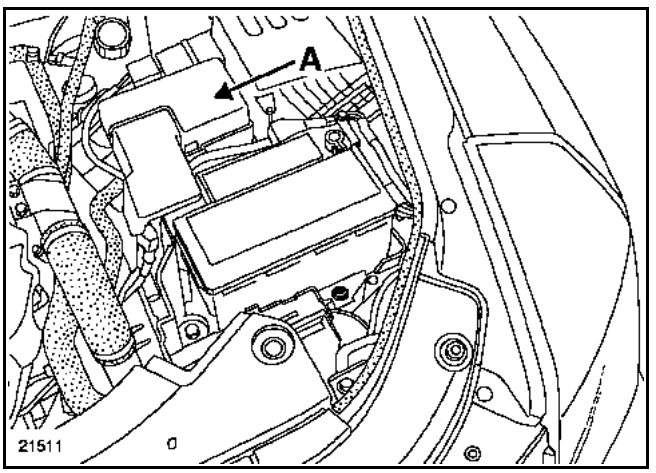

Drain the brake fluid reservoir using a syringe until the fluid level is below the level of the master cylinder supply opening.

Connect a pipe linked to a tank to opening (B).

Open the bleed screw on the slave cylinder side and pump the clutch pedal two or three times keeping the pedal in your hand (this enables emptying of the master cylinder and the pipe).

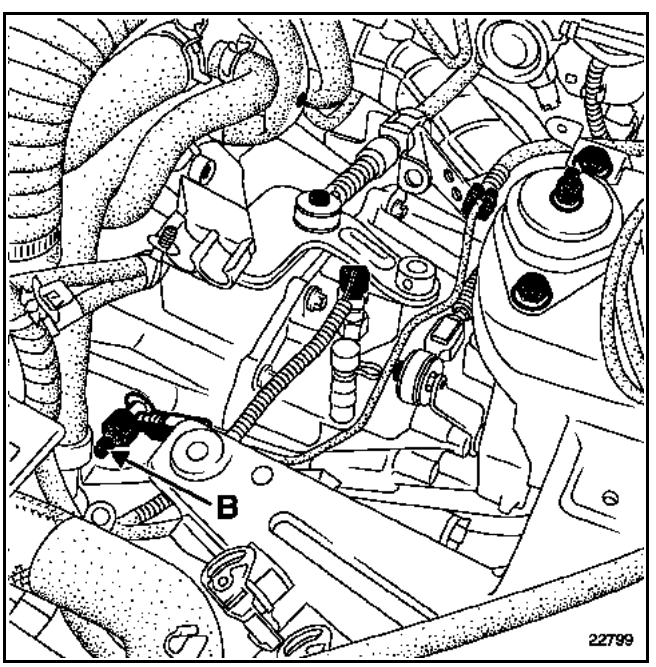

In the passenger compartment

Disconnect the master cylinder ball joint from the clutch pedal.

Engine compartment (contd)

Remove rubber rail protector (1) (see **Section 13B: Diesel injection Rail Protector**).

THE RAIL PROTECTOR PERFORMS A SAFETY FUNCTION AND REQUIRES PARTICULAR ATTENTION WHEN BEING FITTED.

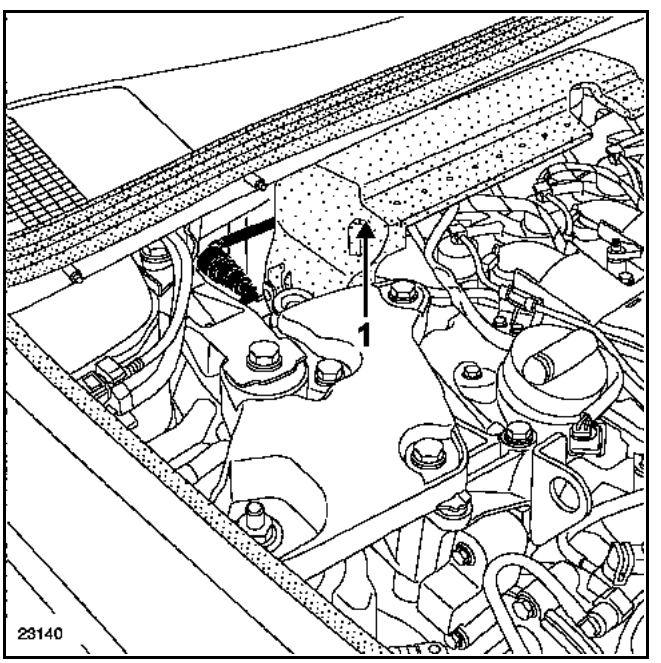

Unclip the hose connecting the master cylinder brake fluid reservoir at (2).

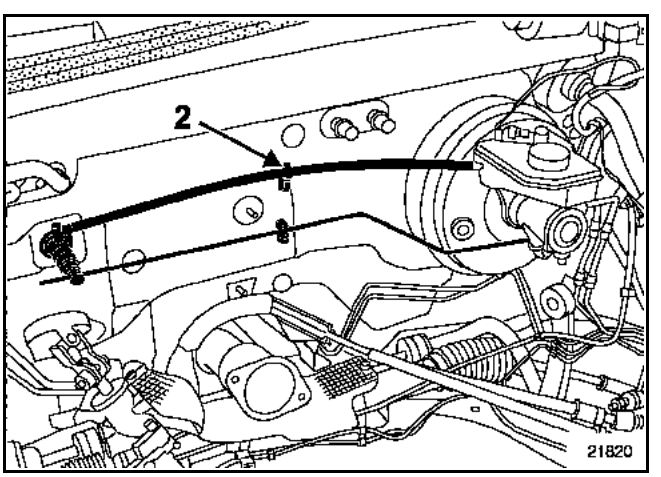

GETtheMANUALS.org

Place a cloth under the master cylinder.

Release clutch control pipe mounting clip at (B) and remove it.

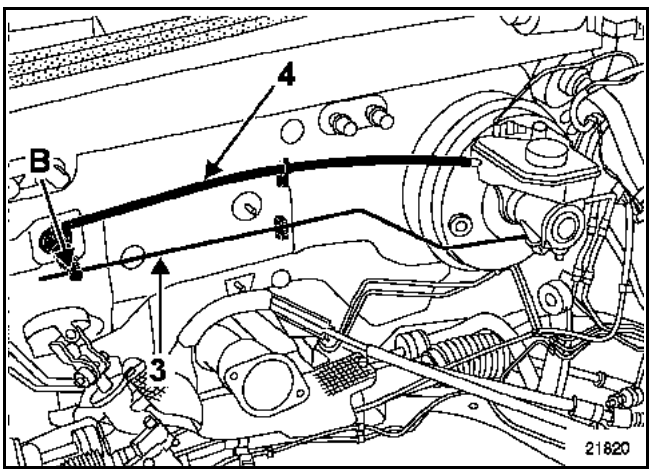

Remove the master cylinder from the bulkhead by turning it one quarter of a turn clockwise (bayonet type mounting) using tool **Emb. 1596**.

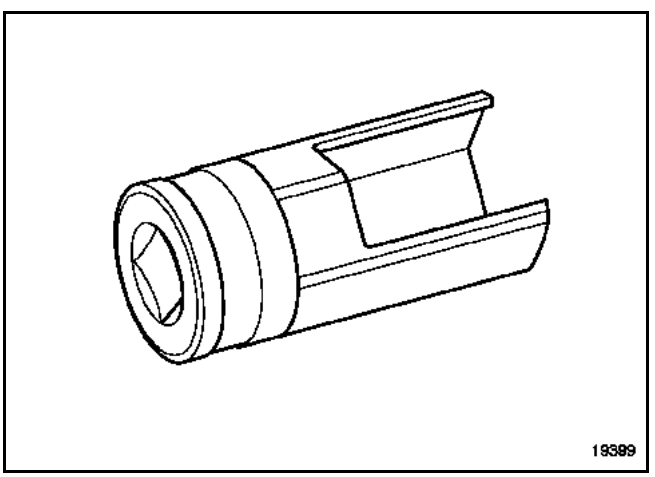

Remove the master cylinder supply hose (4).

REFITTING

To refit the rail protector (see **Section 13B: Diesel Injection Rail Protector**).

IF THE NOTES IN SECTION 13B ARE NOT ADHERED TO THIS COULD HAVE SERIOUS CONSEQUENCES ON SAFETY CONDITIONS.

NOTE: lubricate the clutch master cylinder supply hose end (4) with brake fluid to facilitate fitting the brake fluid reservoir to the take-off pipe.

CAUTION: do not use the take-off pipe as support when fitting.

The master cylinder is fitted with a foolproofing device. There is only one possible position.

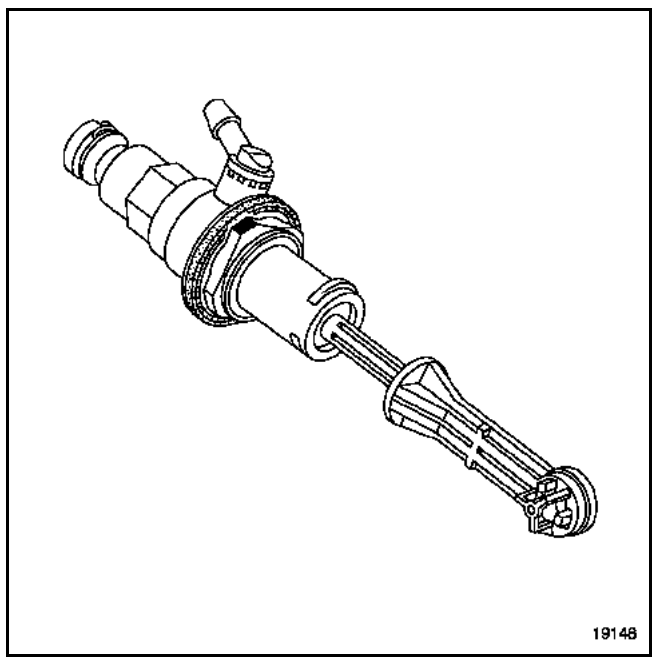

Add brake fluid to the reservoir.

Bleed the hydraulic circuit:
– remove the bleed cap,
– connect a pipe linked to a reservoir containing brake fluid to opening (D),

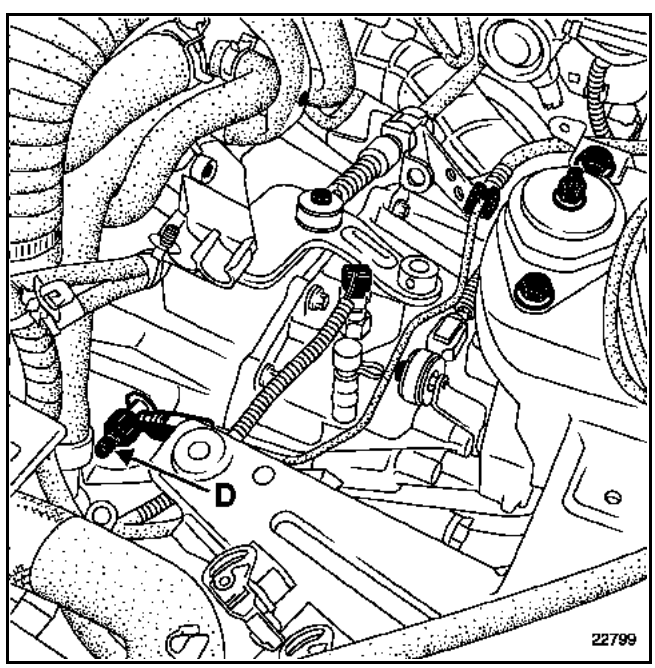

GETtheMANUALS.org

– install the bleeding device onto the brake fluid reservoir,
– operate the bleeding device,
– wait until the air is completely expelled from the hydraulic circuit.

Top up the brake fluid.

Check that the clutch system is operating correctly.

IMPORTANT: do not forget to carry out the programming needed for the vehicle to operate correctly after connecting the battery (refer to **Section 80A**).

GETtheMANUALS.org

REMOVAL

Place the vehicle on a lift.

Open the bonnet and remove:
– the engine cover plates,
– the fuse box cover (A),

Disconnect the battery.

Remove:
– the battery bolt (B),

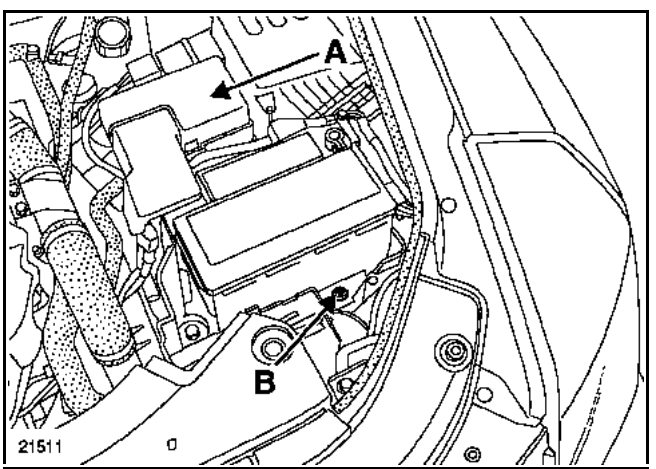

– the battery mounting fuse box,
– the electric wiring harness on the battery mounting at (D),
– the air duct (1) and (2),

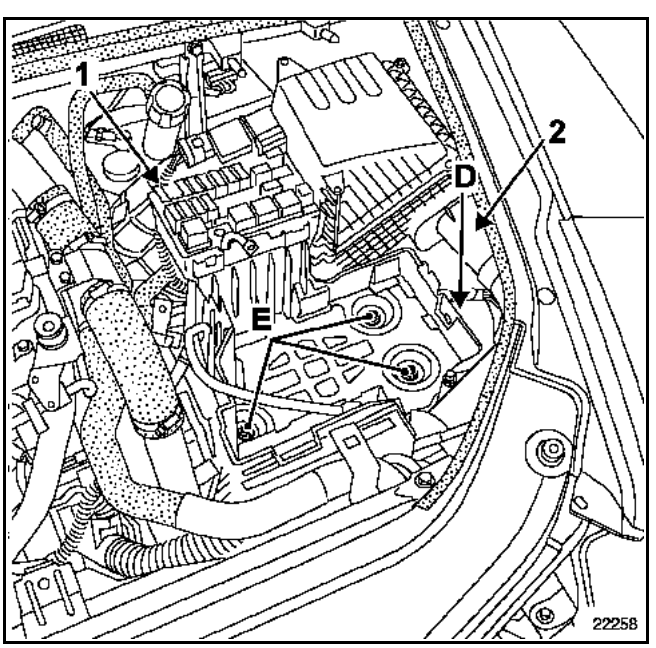

– the battery mounting bolt (E).

To do this, drill out the three tamperproof bolts using a 5 mm diameter drill bit in the bolt shaft.

Remove the bolt using tool Mot. 1372.

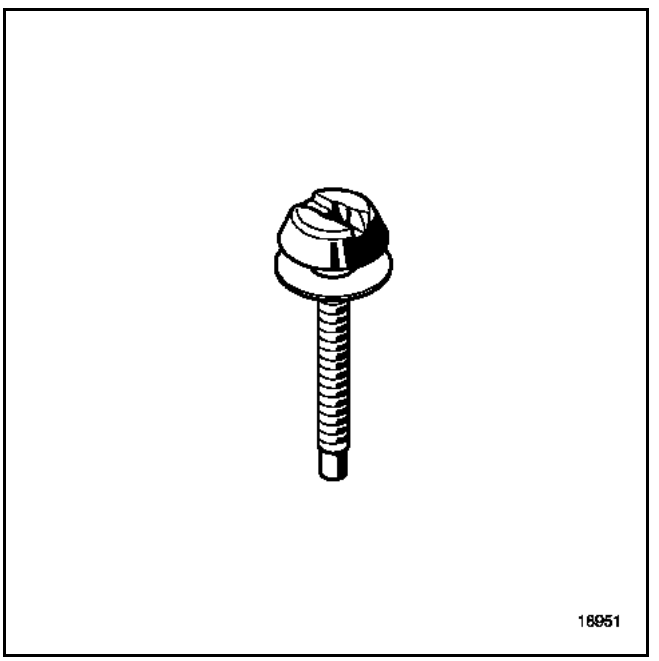

Release:
– the computer (nuts 3) to remove the computer connectors,
– the electric wiring harness on the computer tray to remove it.

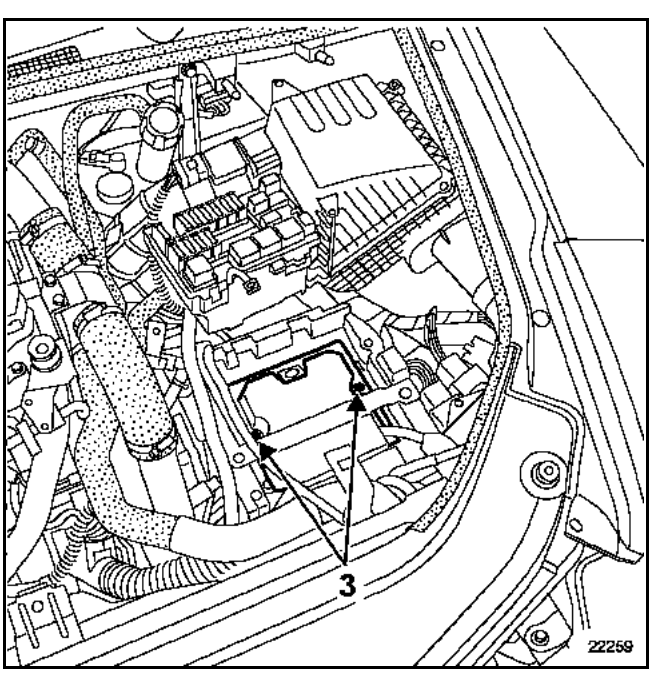

GETtheMANUALS.org

Drain the brake fluid reservoir using a syringe until the fluid level is below the level of the master cylinder supply opening.

Connect a pipe linked to a tank to opening (B).

Open bleed on the slave cylinder side and pump the clutch pedal two or three times keeping the pedal in your hand (this enables emptying of the master cylinder and the pipe).

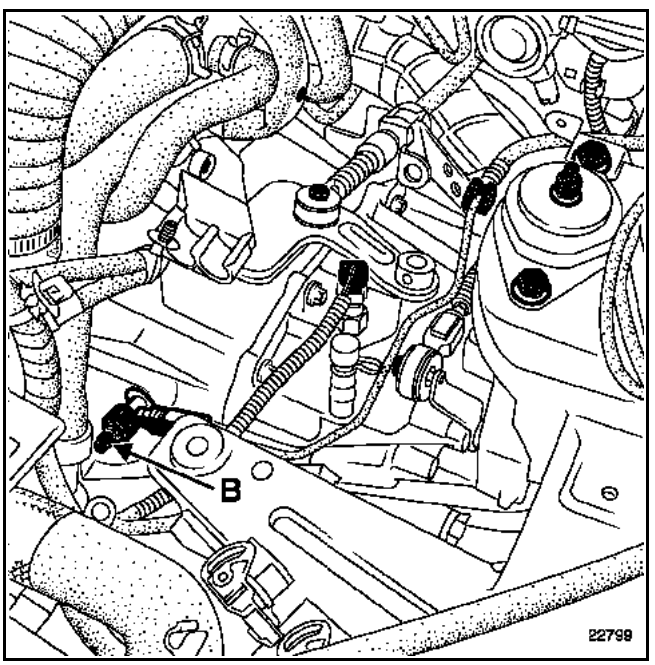

Remove rubber flap (1) (see **Section 13B: Diesel Injection Rail protector**).

THE RAIL PROTECTOR PERFORMS A SAFETY FUNCTION AND REQUIRES PARTICULAR ATTENTION WHEN BEING FITTED.

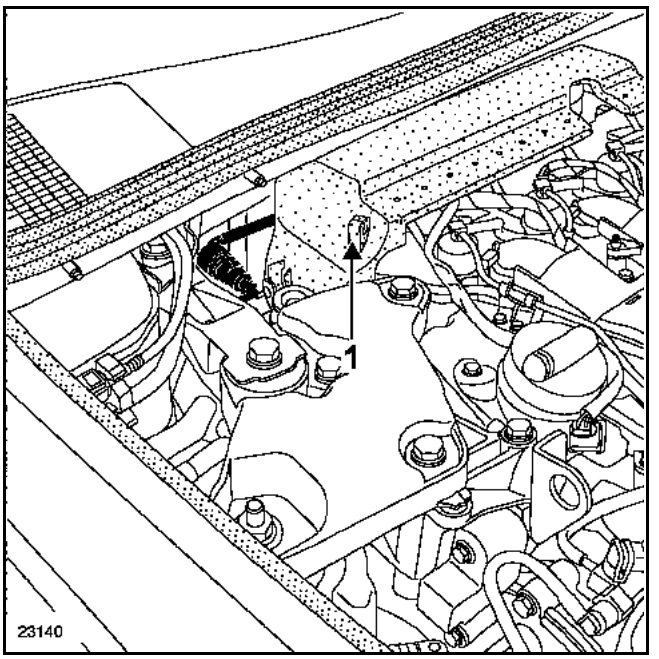

Place a cloth under the master cylinder.

Release clutch control pipe mounting clip at (B) and remove it.

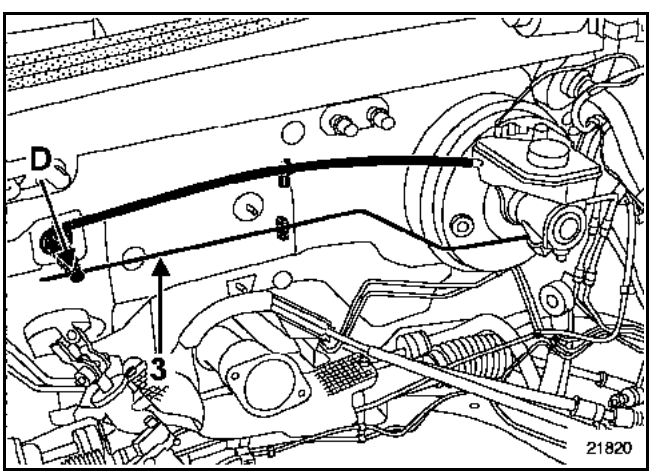

GETtheMANUALS.org

Release the clutch control pipe from the clip at (C).

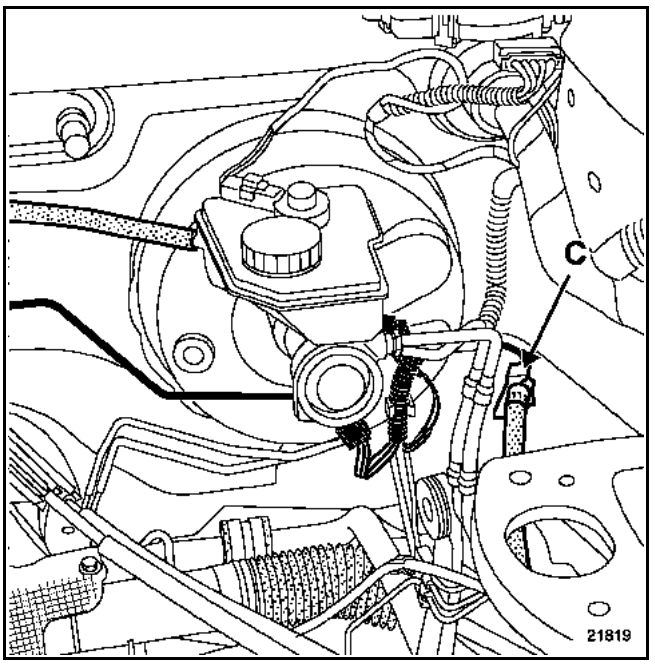

Place a cloth under each opening, then disconnect the pipe.

Release the clip at (D).

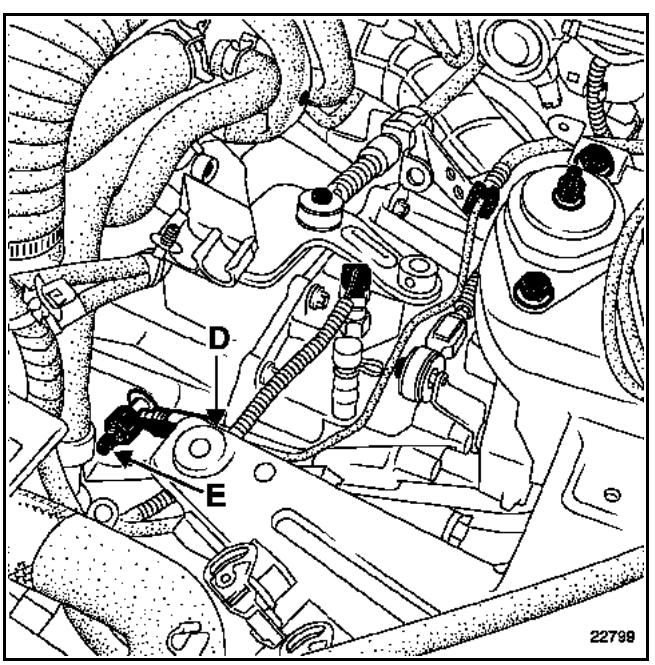

Carefully remove the master-slave connecting pipe taking care not to damage anything.

REFITTING

Check the condition of the seals.

Proceed in the reverse order to removal.

WARNING

When refitting:
– do not damage the various pipes,
– take care to connect them correctly,
– position the various mounting clips correctly.

Add brake fluid to the reservoir.

Bleed the hydraulic circuit:
– connect a pipe linked to a reservoir containing brake fluid to opening (E),
– install the bleeding device onto the brake fluid reservoir,
– operate the bleeding device,
– open the bleed screw,
– wait until the air is completely expelled from the hydraulic circuit.

Top up the brake fluid reservoir.

Check that the clutch system is operating correctly.

IMPORTANT: do not forget to carry out the programming needed for the vehicle to operate correctly after connecting the battery (refer to **Section 80A**).

GETtheMANUALS.org

TIGHTENING TORQUE (in daNm)	
Plate nut	2.1

REMOVAL

Disconnect the battery.

Remove the clutch master cylinder ball joint on the pedal.

Remove:
– grey switch (A) at the start of travel while making a quarter turn,
– sensor connectors (A),
– blue switch (B) at the start of travel while making a quarter turn,
– sensor connectors (B).

Unlock:
– the section linked to the pedal by moving bolt (C) and (1) and sliding it,
– the sensor body by moving bolt (D).

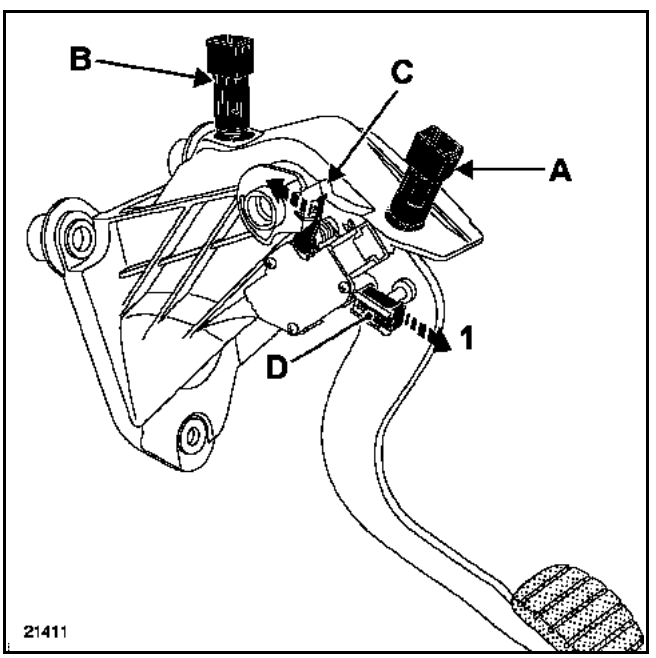

Tilt the sensor (2). Be careful not to break the lower mounting bracket (E).

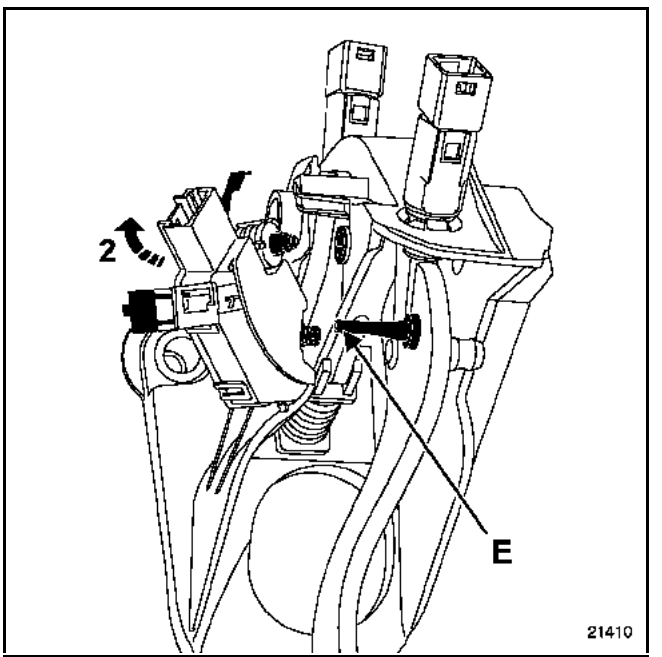

GETtheMANUALS.org

REFITTING

Proceed in the reverse order to removal.

Torque tighten the nuts to **2.1 daNm**.

NOTE: the clutch pedal sensors have an automatic adjustment function which adjusts according to the position of the pedal.

Before refitting the sensor, it is necessary to set its minimum position by pulling the piston.

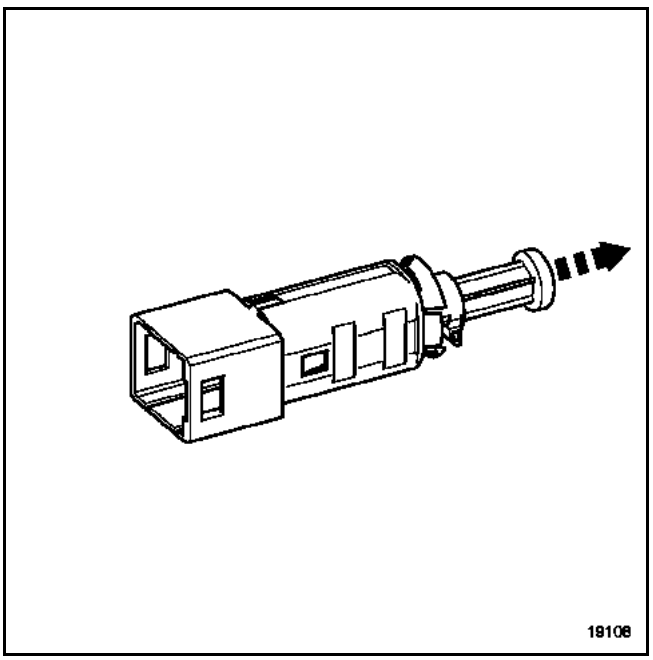

REFITTING

Position the sensors in their housing and turn it one quarter turn clockwise.

Reconnect the clutch pedal switch connectors.

GETtheMANUALS.org

TIGHTENING TORQUES (in daNm)	
Plate nut	2.1
Yoke bolt	2.1
Steering column mounting bolt	2.1
Electric lock bolt	0.8
Lower shell bolt	0.2
Steering wheel bolt	4.4
Reinforcement plate bolts	2.1
Reinforcement plate nuts	2.1
Beam bolts	2.1
Beam side bolt	0.8

REMOVAL

Disconnect the battery.

Remove:
- the steering column (see **Section 36B: Steering column**),
- the central console (see **Section 57A: Central console**),
- the instrument panel (see **Section 57B: Instrument panel**).

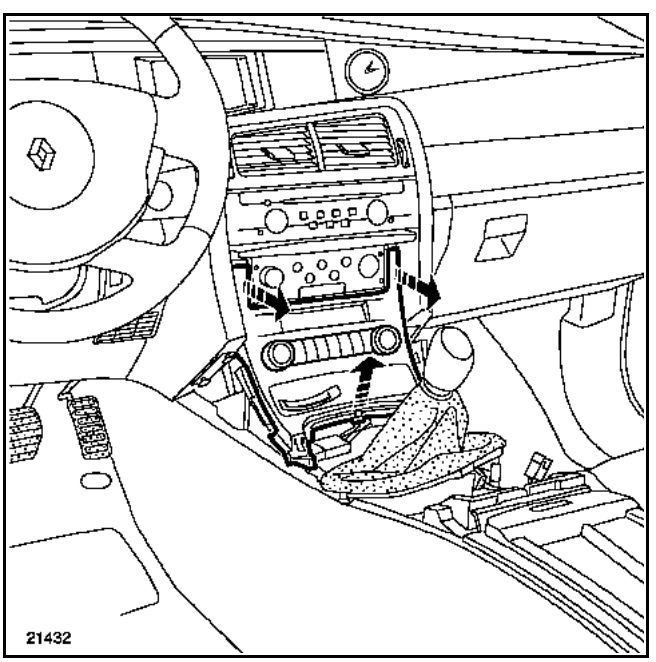

Remove, one after the other:
- the fuse/relay boxes at (1) on both sides of the beam,
- the voice synthesiser unit (if fitted).

Release the various electrical harnesses attached to instrument panel beam.

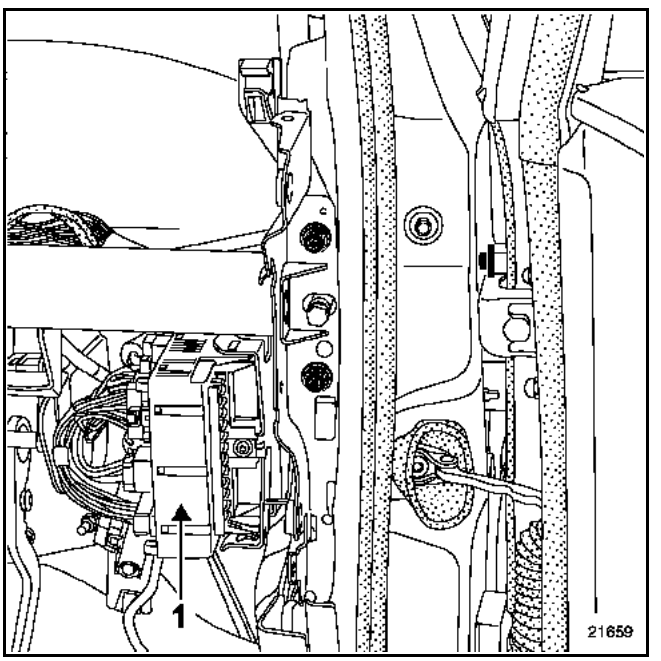

GETtheMANUALS.org

Remove:
– plate (B) from the beam reinforcement,

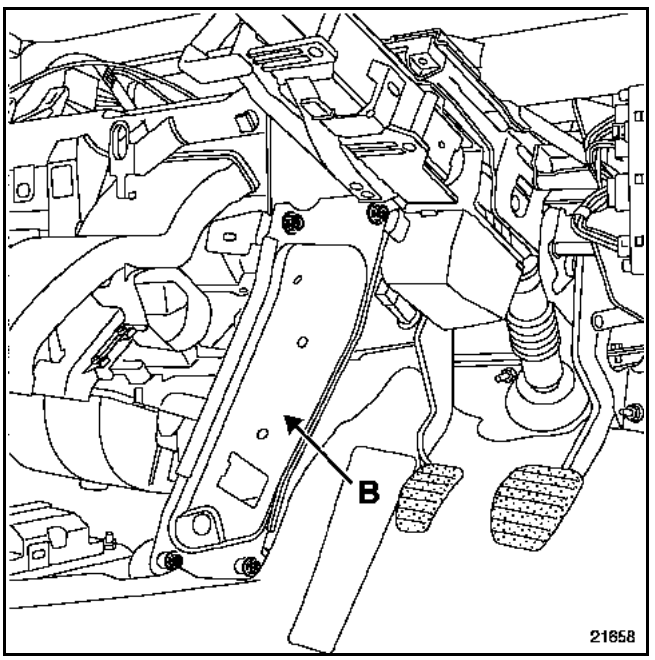

– the beam mounting screws (2) and (3),
– the three distribution unit bolts on the instrument panel beam.

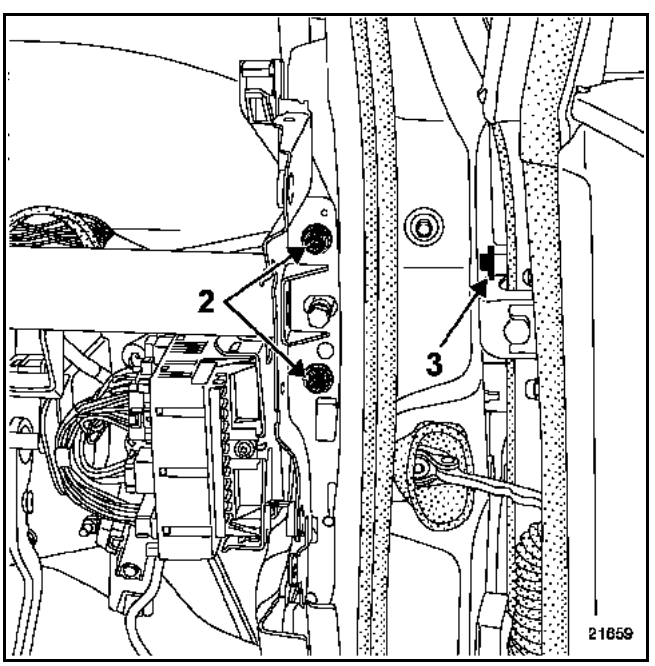

Driver's side

Remove:
– the accelerator pedal connector,
– the pedal return assembly nuts (C).

Release the wiring harness assembly (4).

Remove the clutch master cylinder ball joint from the pedal.

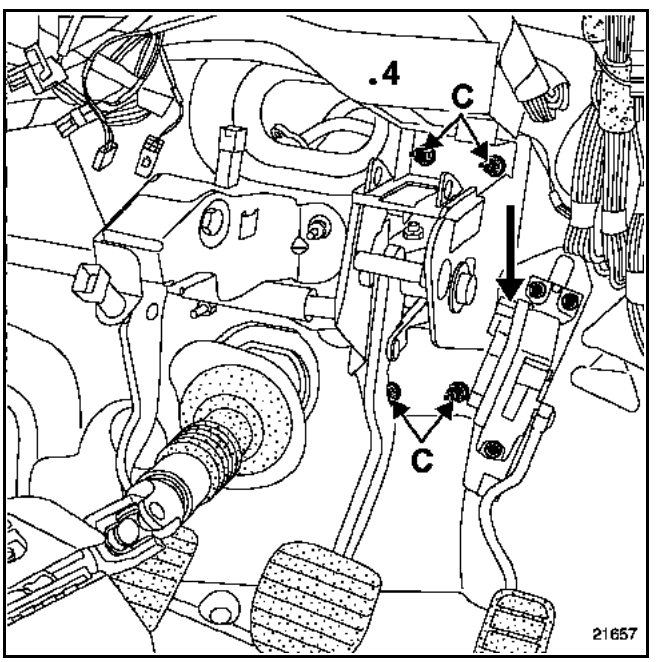

GETtheMANUALS.org

Remove:
– grey switch (A) at the start of travel while making a quarter turn,
– sensor connectors (A),
– the blue sensor (B) at the end of travel while making a quarter turn,
– sensor connectors (B).

Unlock:
– the section linked to the pedal by moving lock (C) and (1), and sliding it,
– the sensor body by moving lock (D).

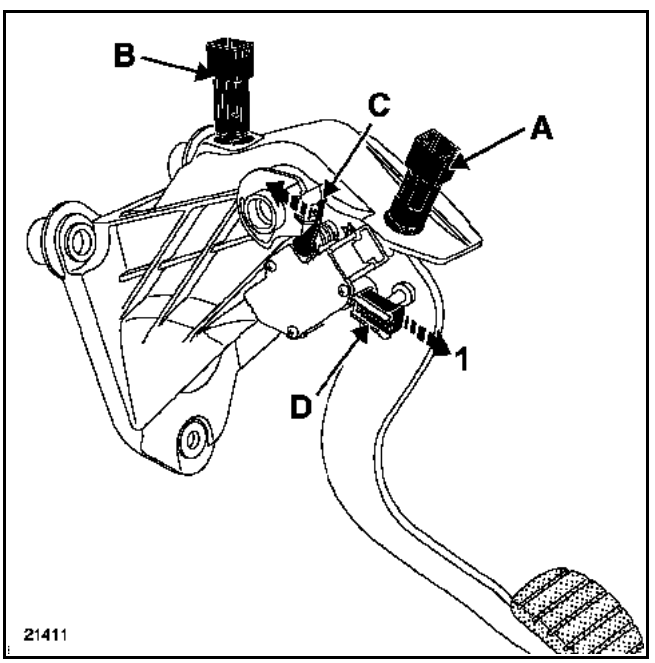

Tilt sensor (2). Be careful not to break the lower mounting bracket (E).

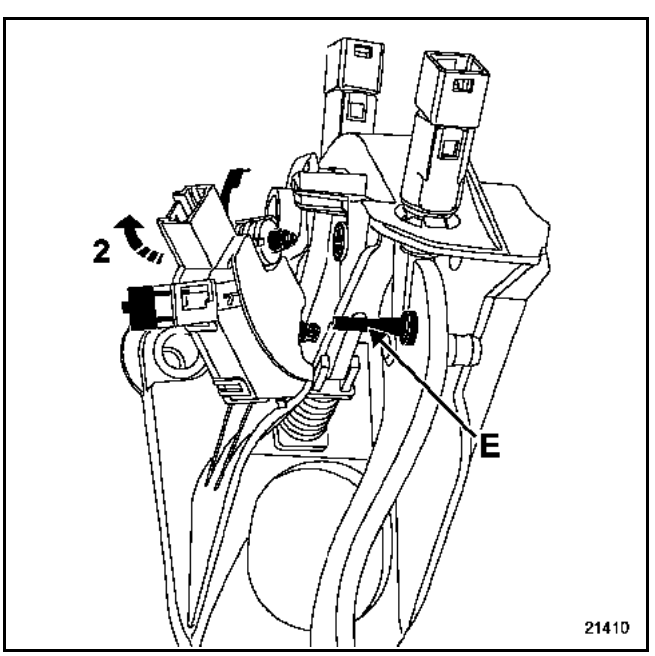

Remove the four mounting nuts (3) from the clutch pedal.

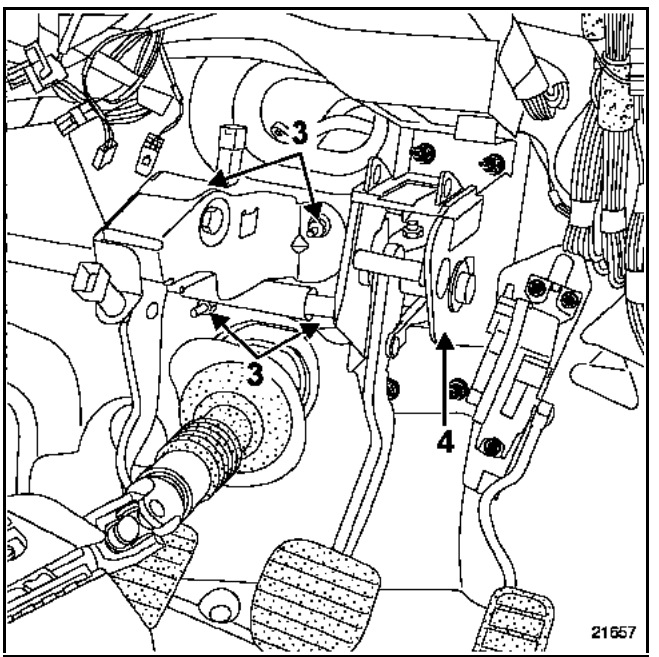

With the assistance of another person, lift up the heating unit and separate the pedal return device (4) to extract the clutch pedal system.

GETtheMANUALS.org

REFITTING

Carry out the removal procedure in reverse.

Torque tighten the nuts to **2.1 daNm**.

NOTE: the clutch pedal sensors have an automatic adjustment function which adjusts according to the position of the pedal.

Before refitting the sensor, it is necessary to set its minimum position by pulling the piston.

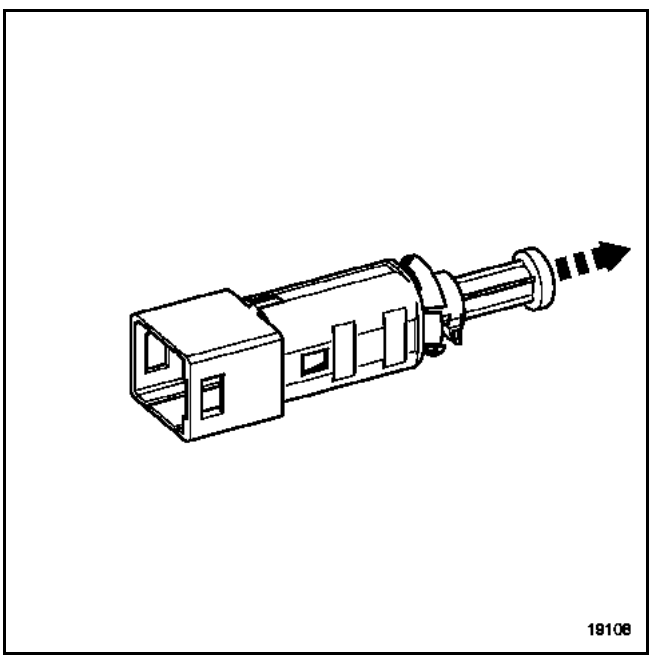

REFITTING

Position the sensors in their housing and turn it one quarter turn clockwise.

Reconnect the clutch pedal switch connectors.

IMPORTANT: do not forget to carry out the programming needed for the vehicle to operate correctly after connecting the battery (refer to **Section 80A**).

GETtheMANUALS.org

EXTERNAL CONTROL CABLES ON PK6 GEARBOX

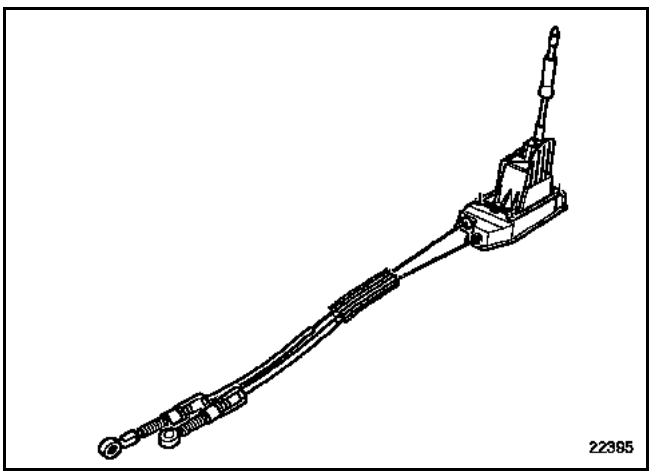

GETtheMANUALS.org

TIGHTENING TORQUE (in daNm)	
Unit mounting bolt	3

REMOVAL

Place the vehicle on a lift.

In the engine compartment

Open the bonnet and remove:
– the cover located above the battery (LH side),
– fuse box cover (A),

Disconnect the battery.

Remove:
– the fuses along with the fuse holder and release the fuse box from the battery mounting,

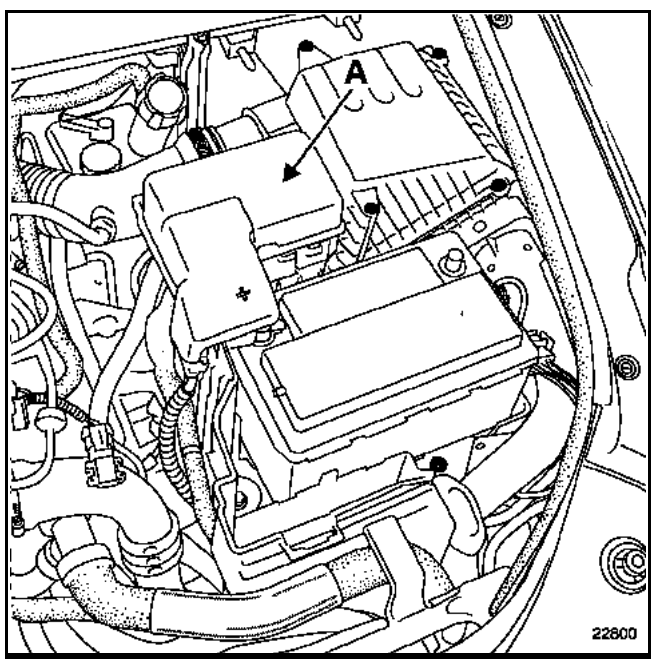

– the two external gear control ball joints (D),
– the two external gear control cable clips (B).

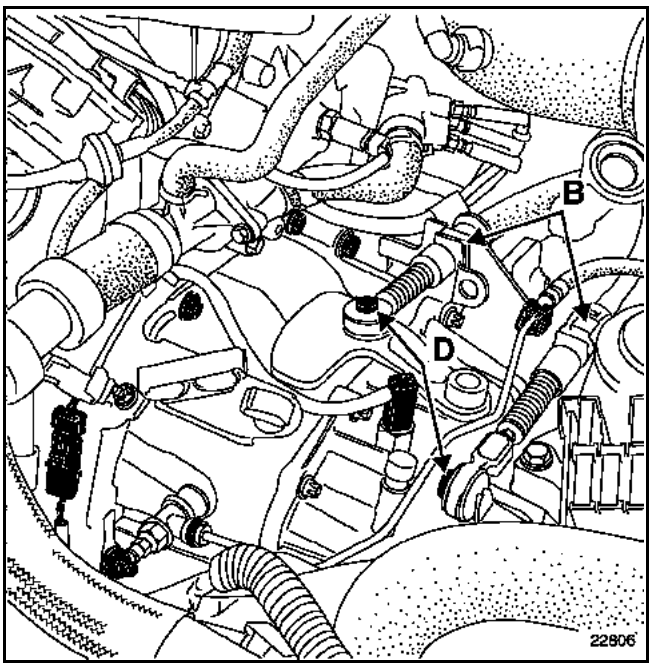

Under the vehicle:

Remove:
– the engine undertray,
– the expansion chamber (see **Section 19B: Exhaust pipe Catalytic converter**).

Unclip the hoses at (1). Cut the plastic retaining clip from the control cable connection sheath. Remove the two mounting screws from the heat shield at (2) and the four clips.

Remove heat shield (C).

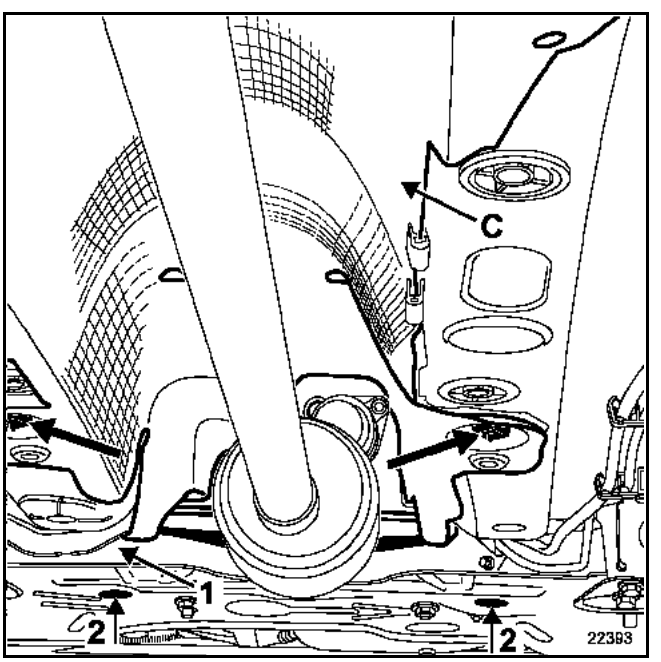

GETtheMANUALS.org

Passenger compartment side

Remove:
– the centre console (see **Section 57A**),

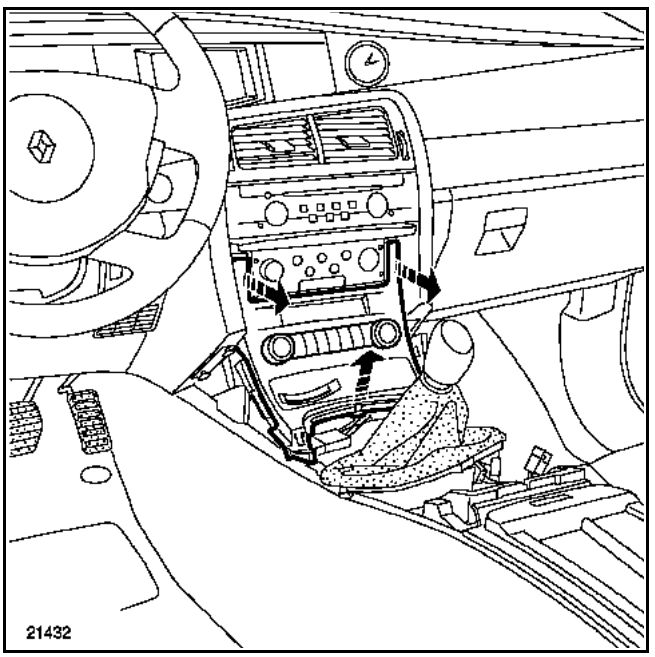

– the blower assembly (see **relevant section**),

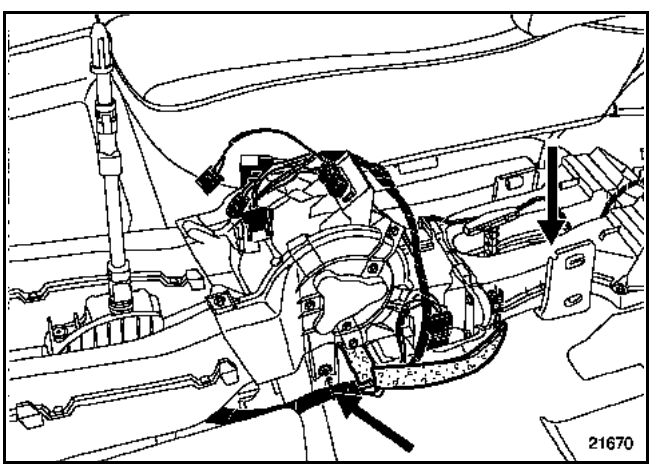

– the control lever cover,
– the four control unit mounting nuts.

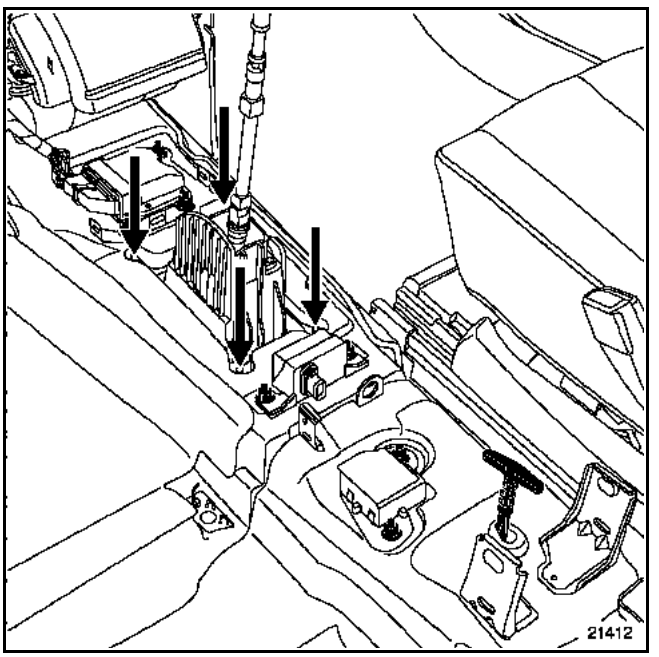

Remove the control unit.

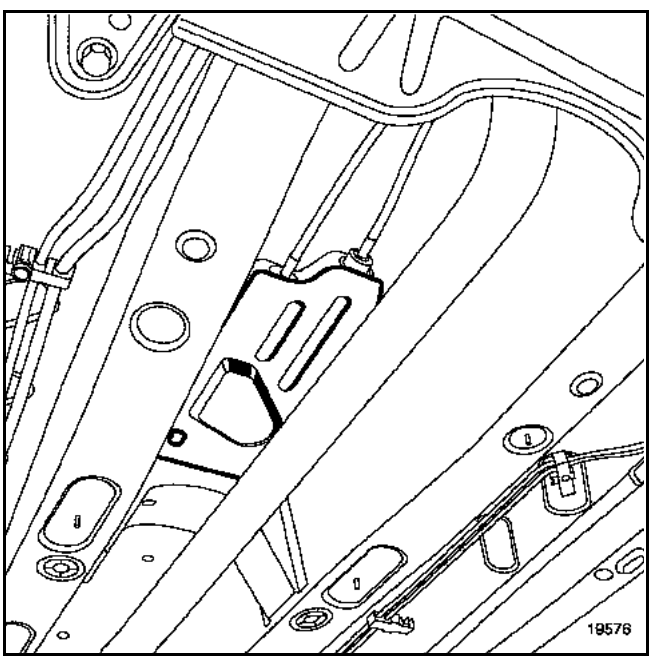

REFITTING

Proceed in the reverse order to removal.

NOTE: when refitting do not forget to attach the control cable sheath to the heat shield.

IMPORTANT: Battery: reinitialise the electrical components see Section 80A: Special notes on the battery.

GETtheMANUALS.org

EXPLODED VIEW

EXTERNAL CONTROL CABLES ON SU1 GEARBOX

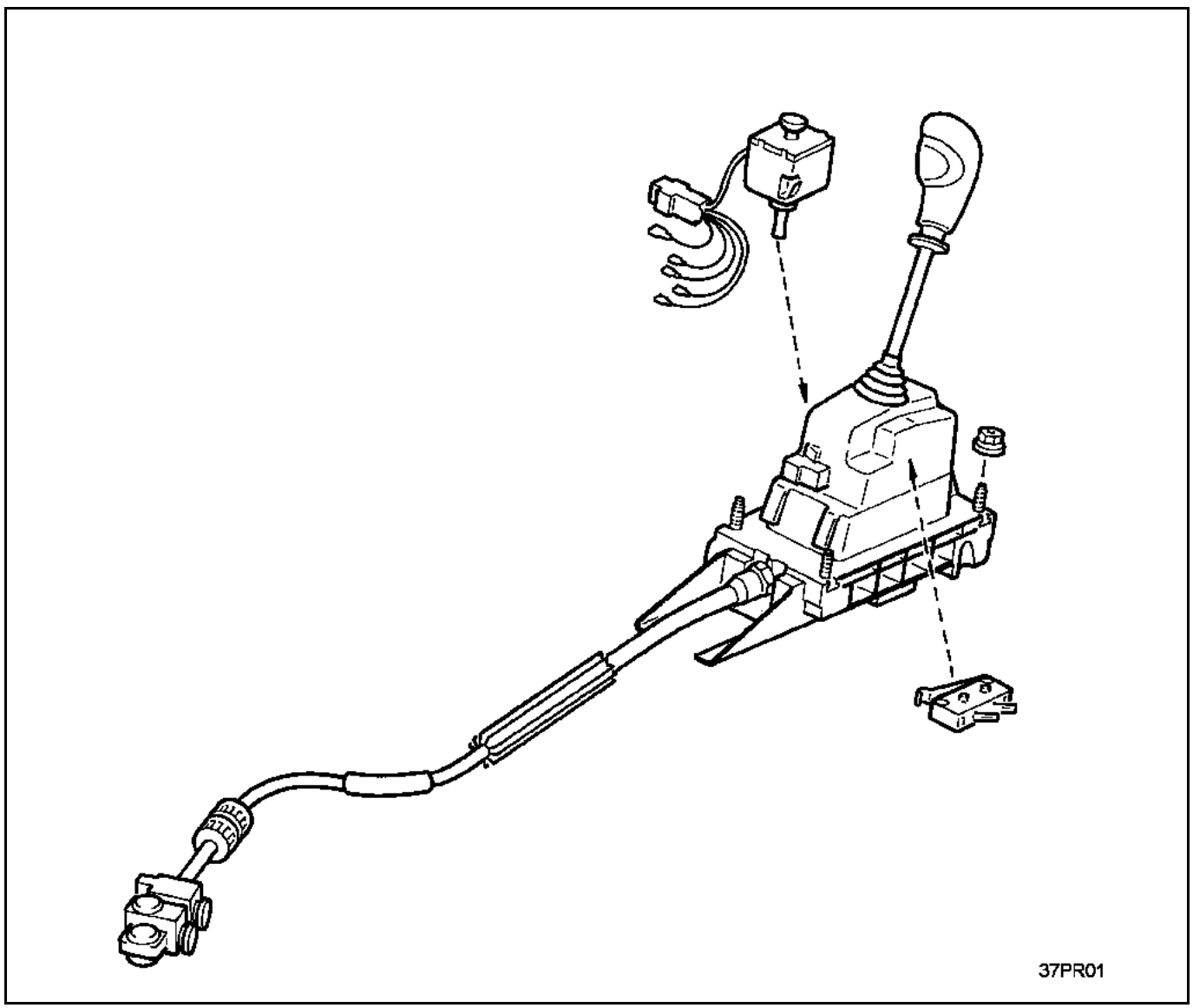

GETtheMANUALS.org

TIGHTENING TORQUE (in daNm)	
Unit mounting bolt	3

SPECIAL FEATURE:

When the vehicle is immobilised, it is possible to unlock the gear lever using a screwdriver by pressing on mark (1).

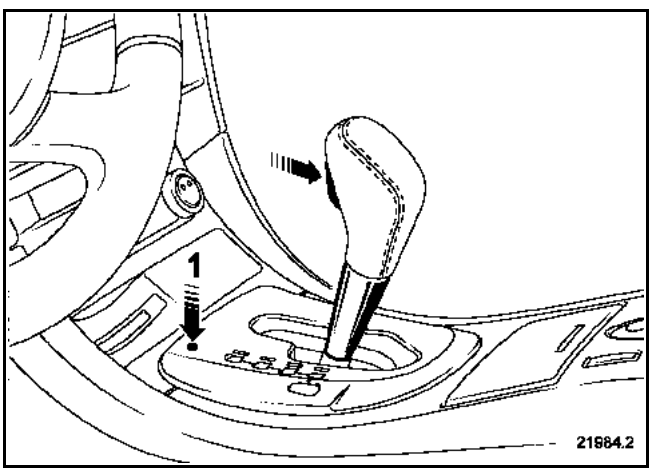

REMOVAL

Place the vehicle on a lift.

In the engine compartment

Open the bonnet and remove:
– the cover located above the battery (LH side),
– the fuse box cover.

Disconnect the battery.

Remove:
– the battery;
– the fuse box,
– automatic gearbox computer (A),

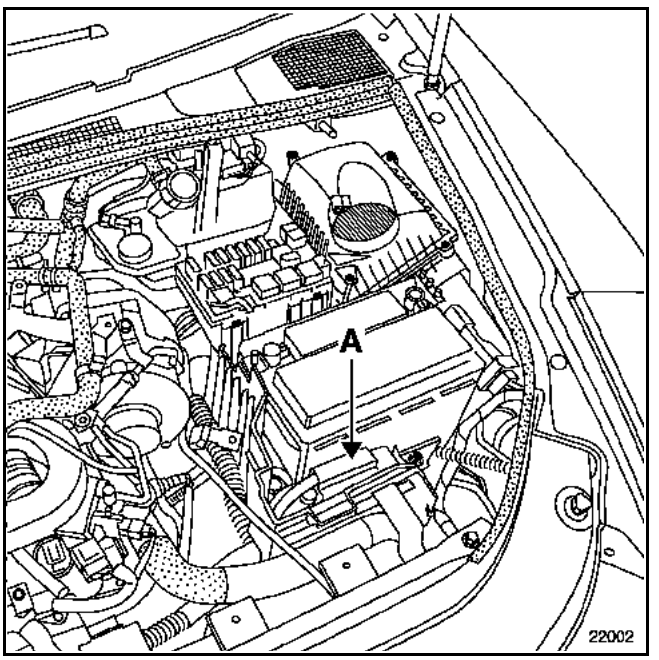

– the battery mounting.

To do this, drill out the three tamperproof bolts using a **5 mm** diameter drill bit in the bolt shaft.

Remove the bolts using **Mot. 1372**.

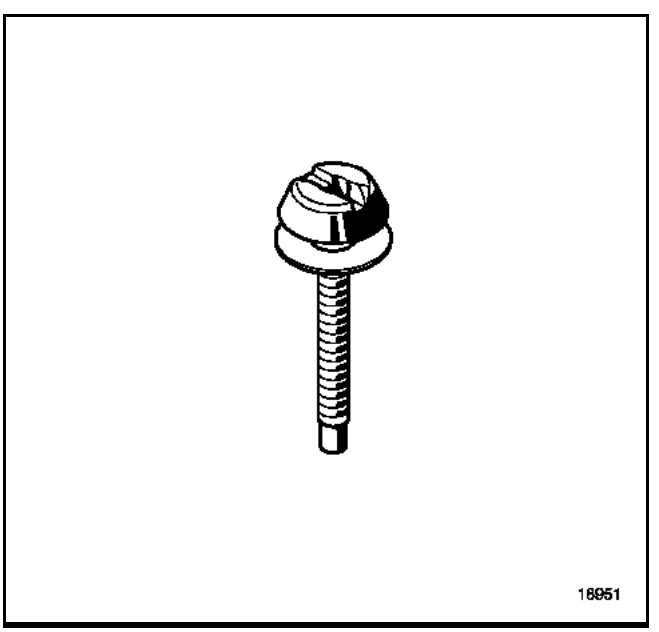

NOTE: replace all the bolts when refitting.

GETtheMANUALS.org

Release:
– the injection computer,
– the injection computer tray.

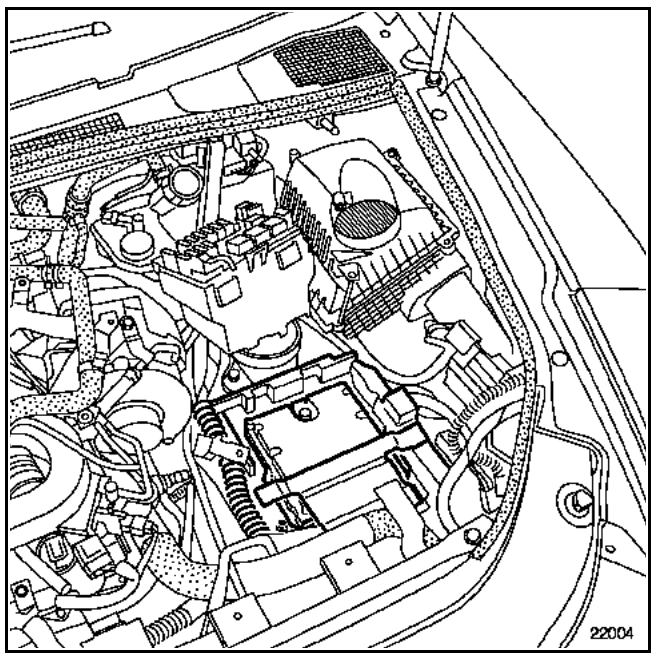

Put the control lever in D position and disconnect:
– ball joint (1) from the multifunction conductor cable,
– cable (2) of the multifunction switch by releasing the sleeve stop.

NOTE: do not move the orange ring during this operation. This could break during removal or refitting. DO NOT REPLACE THE CONTROL CABLE, the absence of this part will not affect the operation of the system.

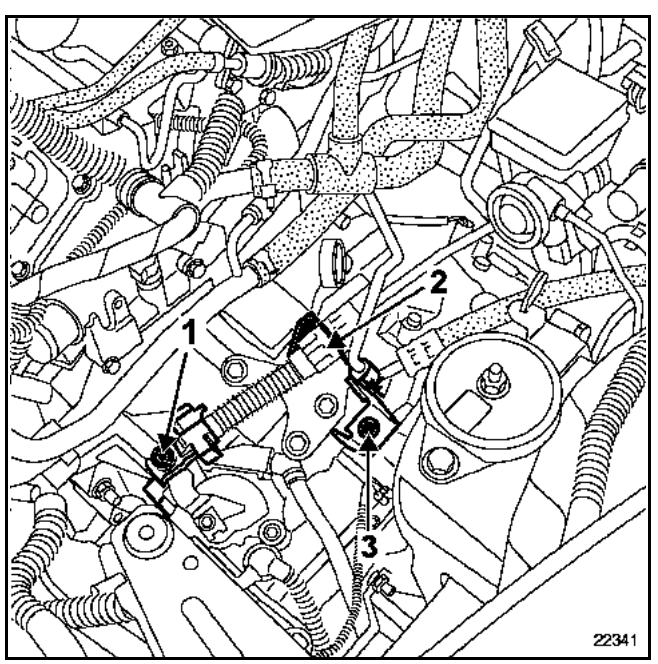

Under the vehicle:

Remove:
– the engine undertray,
– the catalytic pre-converter (see **Section 19B: Exhaust pipe Pre-converter**).

Unclip the hose at (B), cut control cable connection sheath and remove the two heat shield mounting bolts at (D) and the four clips.

Remove heat shield (A).

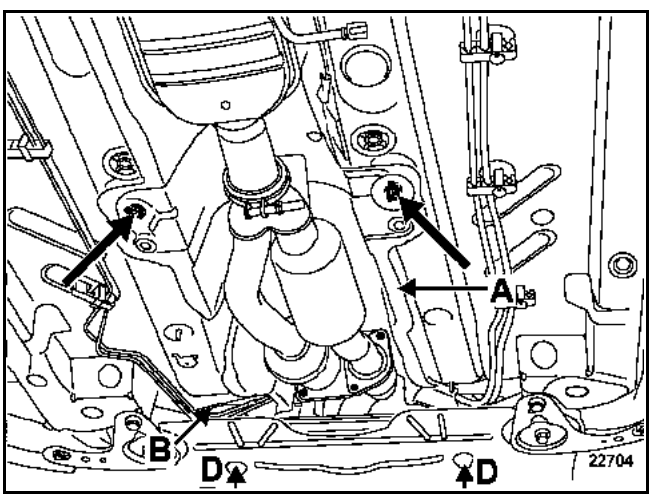

Passenger compartment side

Remove:
– the gear knob (see **Section 57A**) from the centre console (Notes on the automatic gear box lever),
– the centre console (see **Section 57A**).

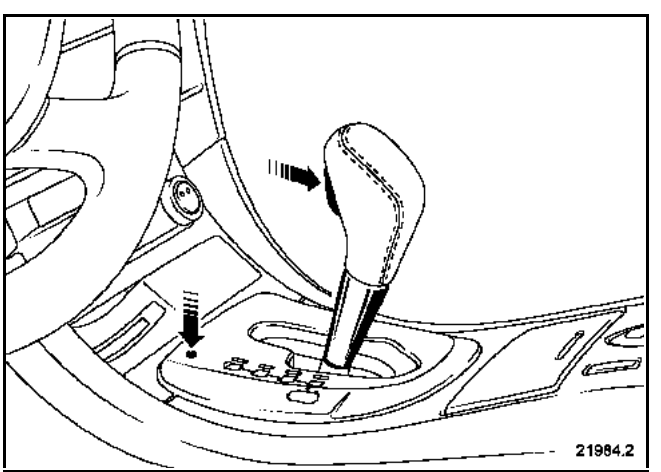

GETtheMANUALS.org

Remove:
– the central fan assembly (see **Section 61A Central fan assembly**),

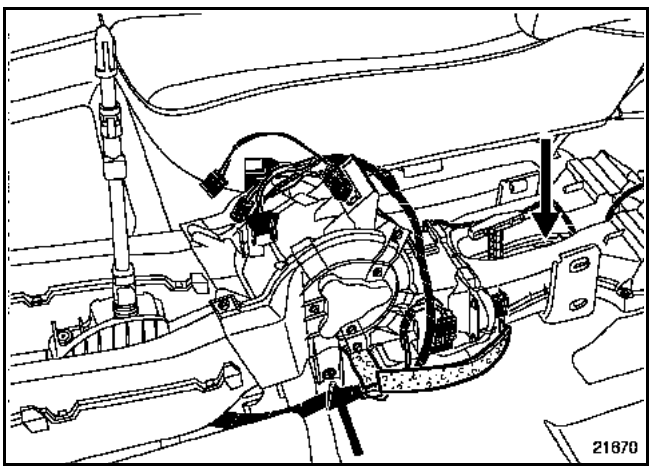

– the control lever cover,
– the four control unit mounting nuts.

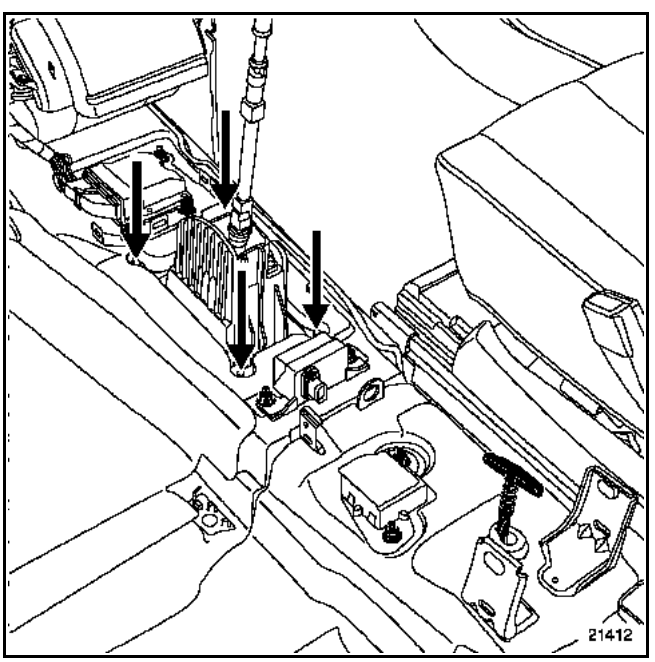

Remove the control unit.

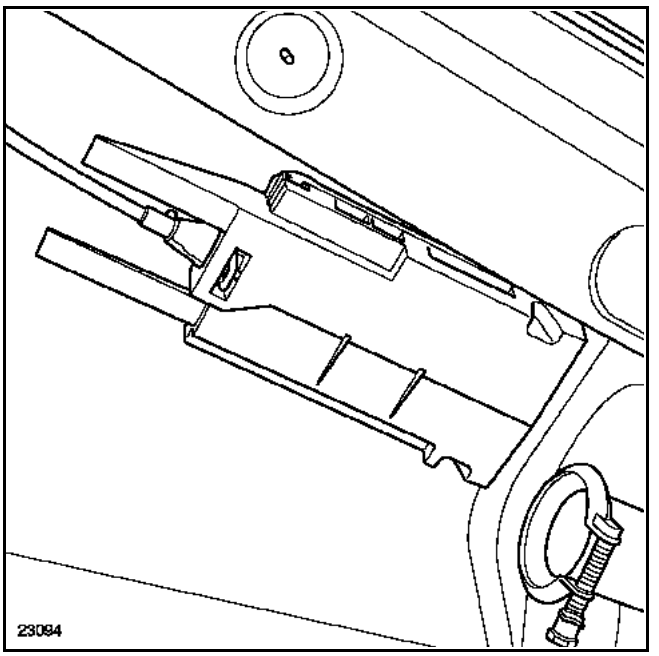

REFITTING

Proceed in the reverse order to removal.

NOTE: when refitting do not forget to attach the control cable sheath to the heat shield.

GETtheMANUALS.org

CONTROL ADJUSTMENT

NOTE: the control lever and the multifunction switch must be in D position.

Press slide valve (A) to release the cable.

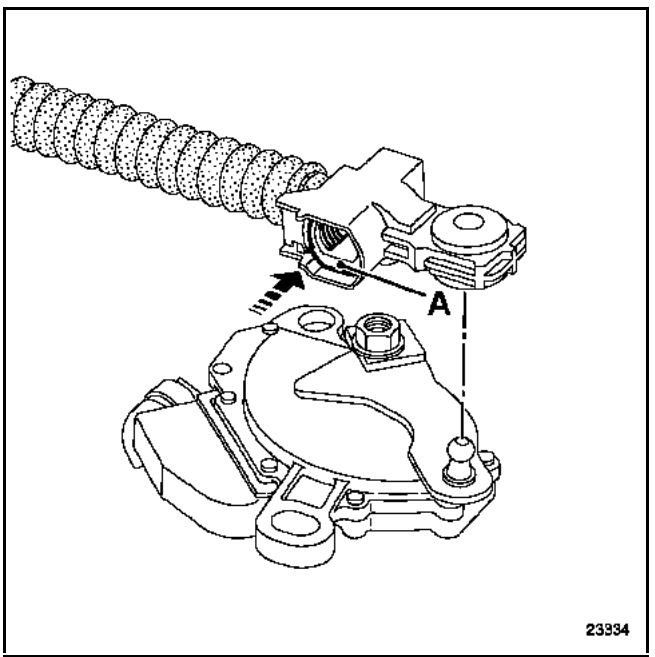

1) fasten the control cable in the sleeve stop at (B),

2) clip the cable end piece to the multifunction switch ball joint at (C),

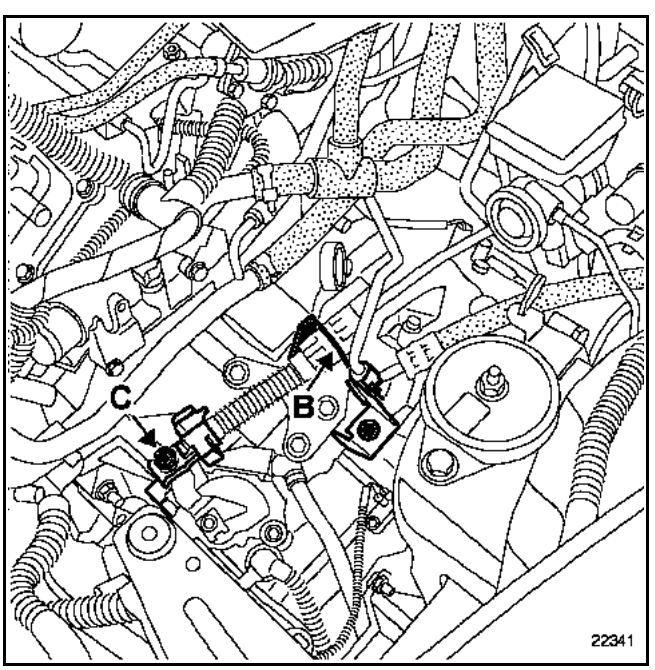

3) apply clip (E) to secure the cable end piece.

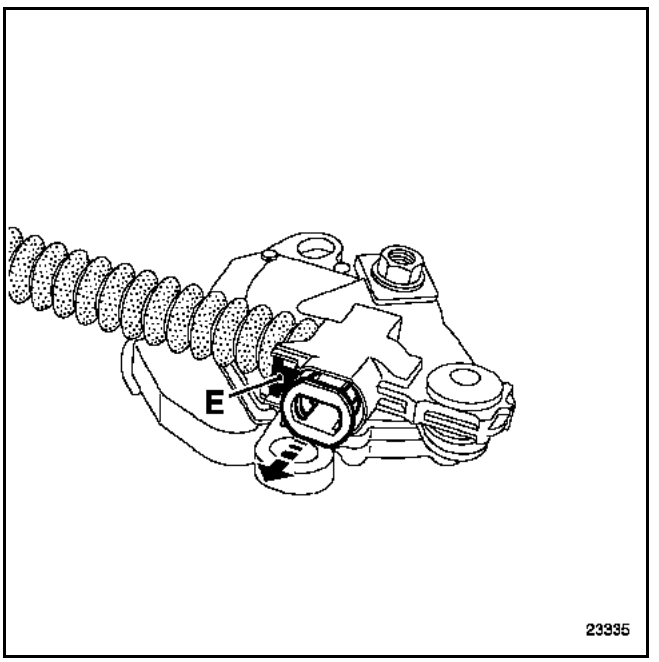

IMPORTANT: Battery: reinitialise the electrical components: see Section 80A: Special notes on the battery.

GETtheMANUALS.org

REMOVAL OF GEAR SELECTION CABLE

SPECIAL FEATURE:

When the vehicle is immobilized, it is possible to unlock the gear selector lever using a screwdriver by pressing on mark (1).

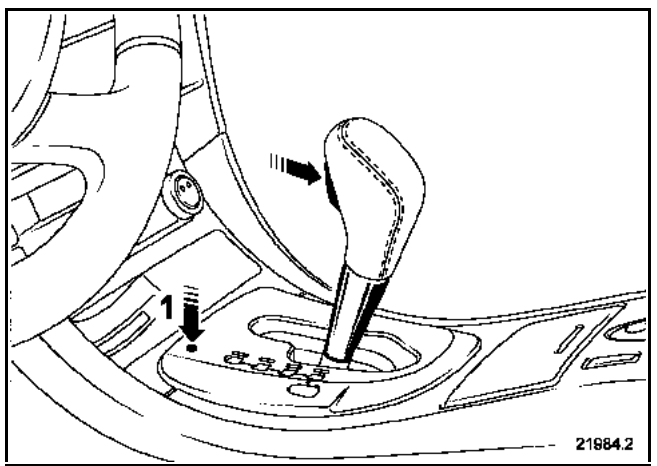

REMOVAL

Place the vehicle on a lift.

In the engine compartment

Open the bonnet and remove:
– the cover located above the battery (LH side),
– the fuse box cover.

Disconnect the battery.

Remove:
– the battery;
– the fuse box,
– automatic gearbox computer (A),

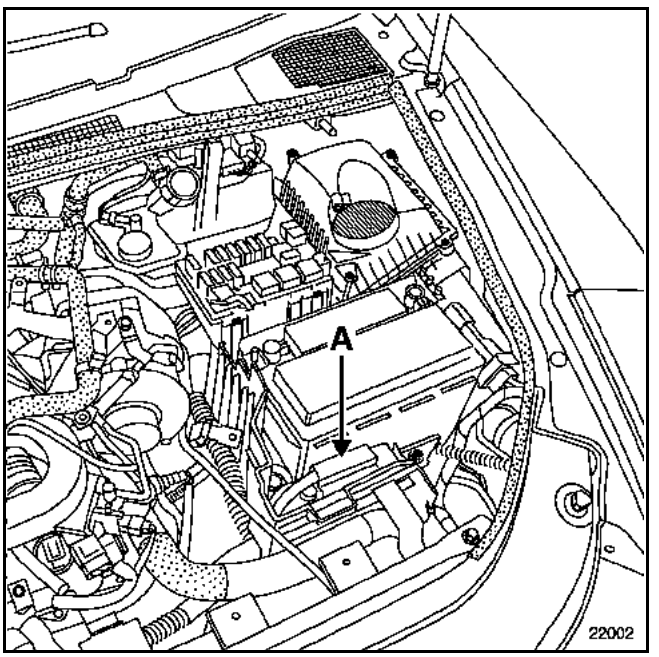

– the battery mounting.

To do this, drill out the three tamperproof bolts using a **5 mm** diameter drill bit in the bolt shaft.

Remove the bolts using **Mot. 1372**.

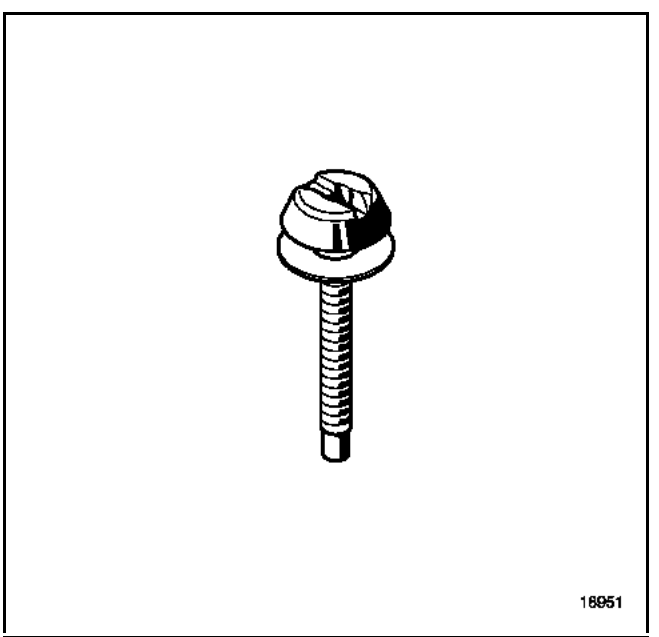

NOTE: replace all the bolts when refitting.

GETtheMANUALS.org

Release:
– the injection computer,
– the injection computer tray.

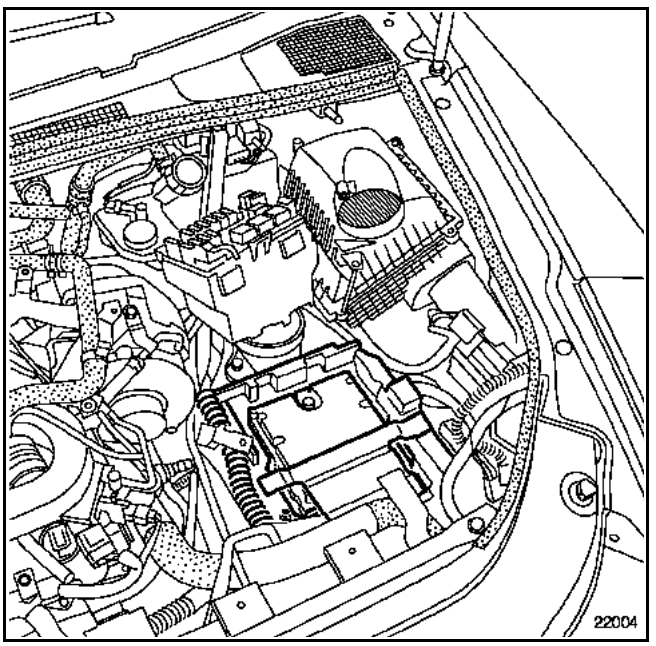

Put the control lever in D position and disconnect:
– ball joint (1) multifunction switch side,
– cable (2) sleeve stop side releasing the hook system.

NOTE: do not move the orange ring during this operation. This could break during removal or refitting. If this happens, DO NOT REPLACE THE CONTROL CABLE, as its absence will not affect the operation of the system.

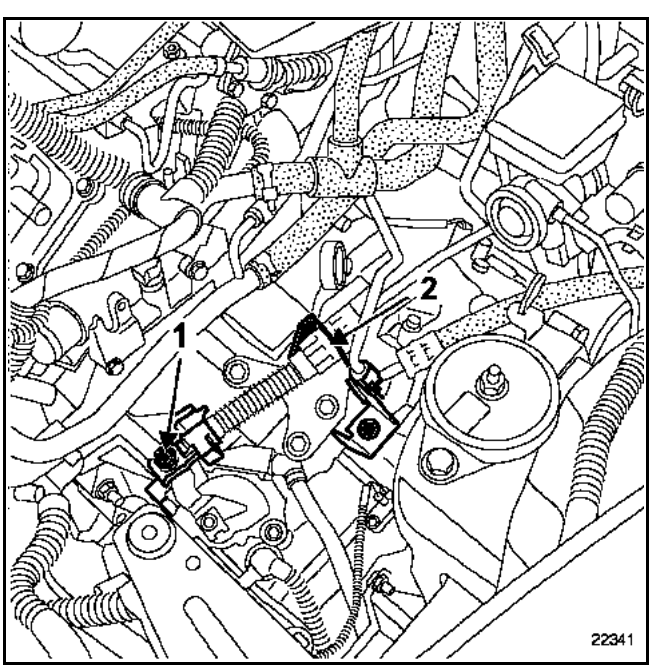

Under the vehicle:

Remove:
– the engine undertray,
– the catalytic pre-converter (see **Section 19B: Exhaust pipe Pre-converter**).

Unclip the hoses at (3). Cut the plastic retaining clip from the control cable connection sheath. Remove the two mounting screws from the heat shield at (4) and the four clips.

Remove heat shield (C).

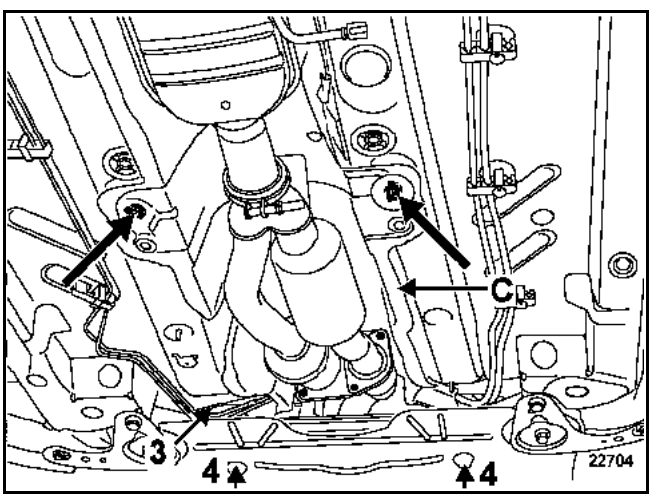

Remove clip (A). Cut the housing underbody along the circular mark.

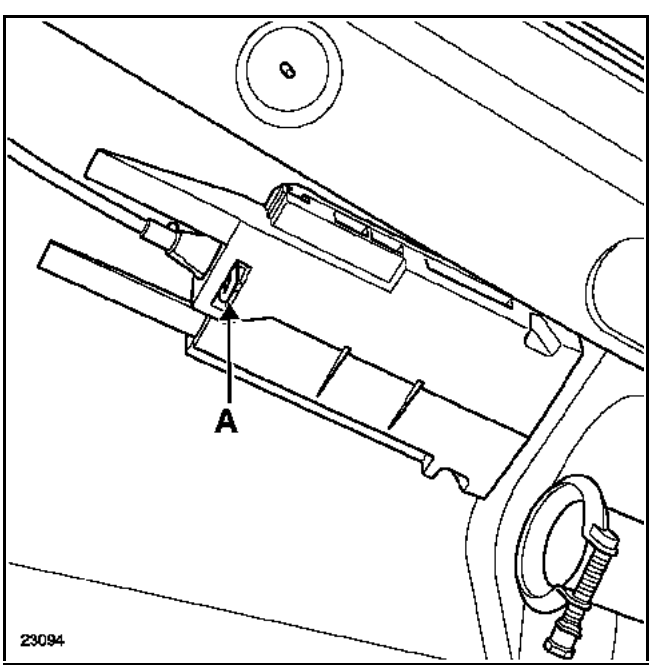

GETtheMANUALS.org

REFITTING

Proceed in the reverse order to removal.

NOTE: when refitting do not forget to attach the control cable sheath to the heat shield.

CONTROL ADJUSTMENT

NOTE: the control lever and the multifunction switch must be in D position.

Press slide valve (A) to release the cable.

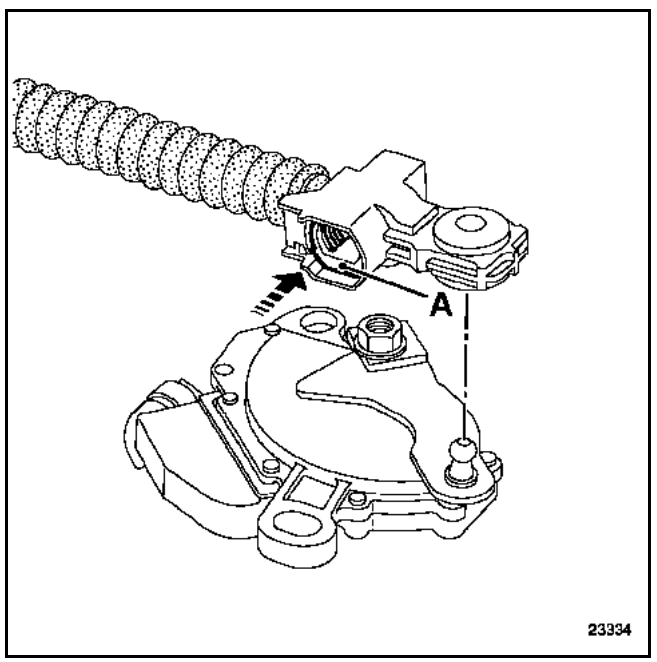

1) fasten the control cable in the sleeve stop at (B),

2) clip the cable end piece on the multifunction switch ball joint at (C),

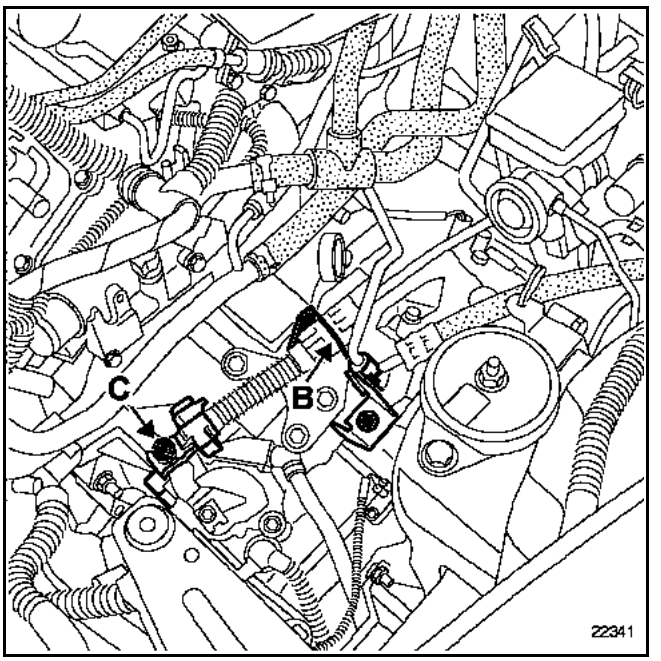

3) apply clip (E) to secure the cable end piece.

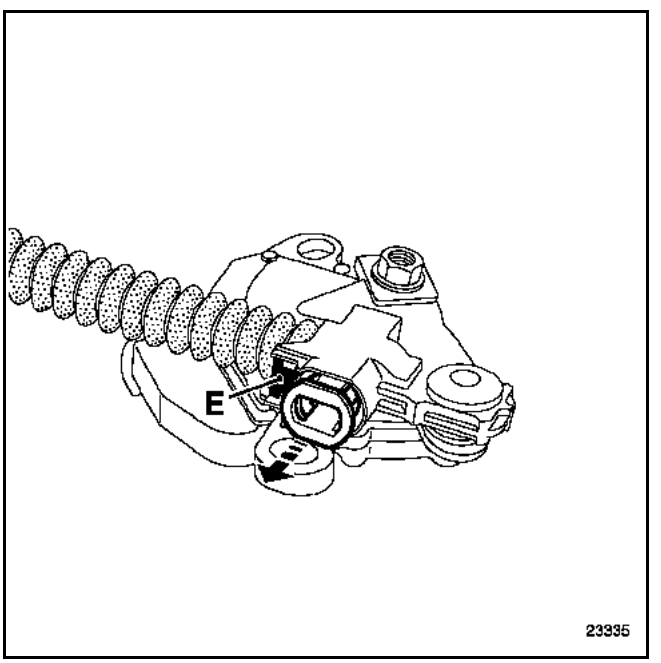

IMPORTANT: Battery: reinitialise the electrical components see Section 80A: Special notes on the battery.

GETtheMANUALS.org

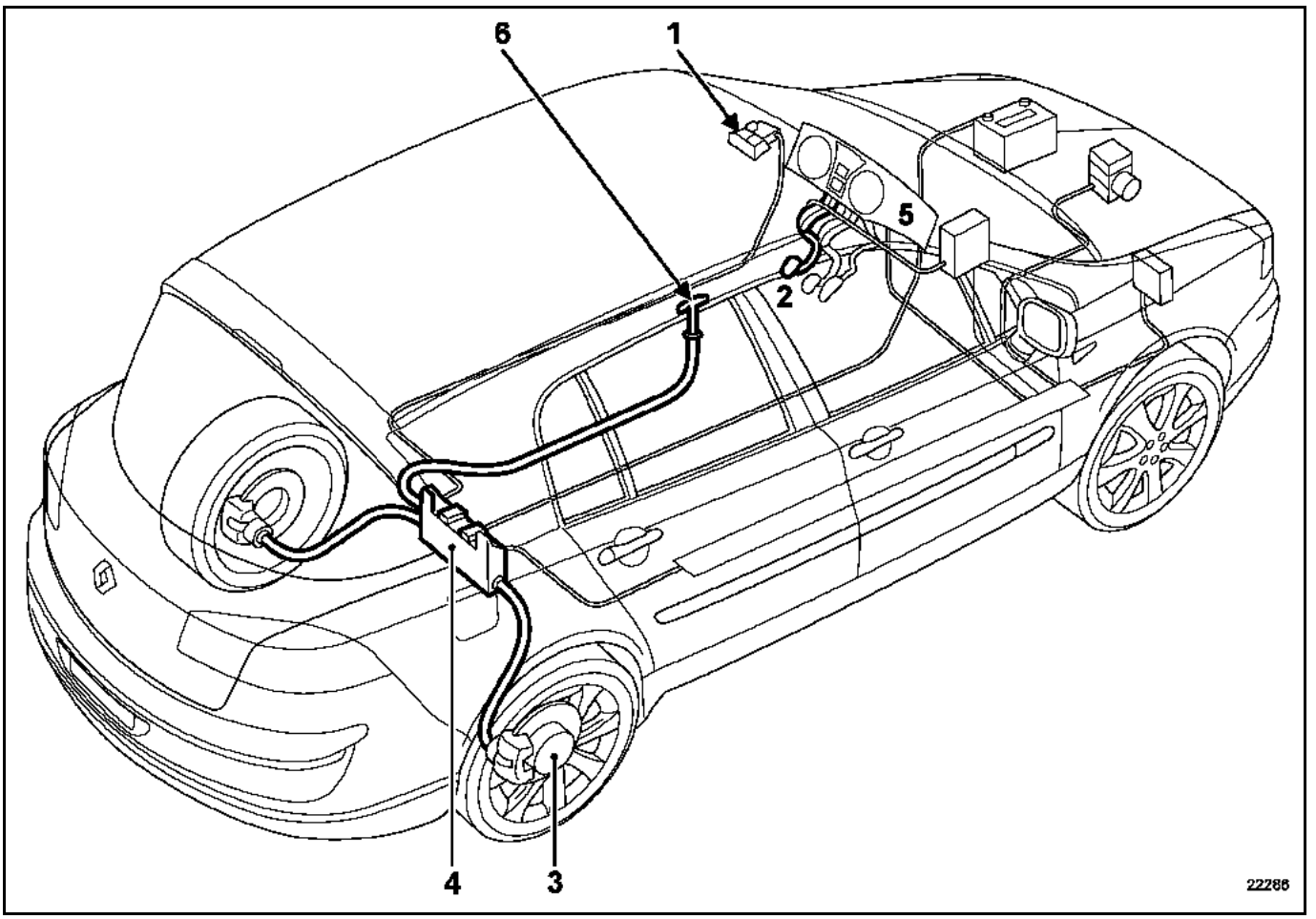

1 The unit
2 The clutch pedal position sensor
3 The wheel speed sensor
4 The control unit
5 The instrument panel indicator lights
6 The emergency parking brake cable control (manual)

The parking brake is controlled by a handle. This replaces the handbrake lever. The lever is located on the instrument panel, next to the steering wheel.

GETtheMANUALS.org

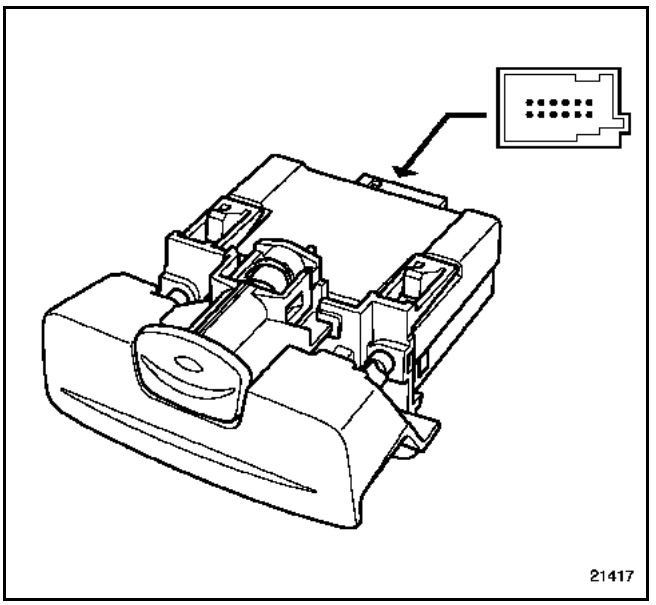

The unit consists of two main components:
– a locking control component, called a handle,
– an unlocking control button, with a red indicator light which shows the status of the parking brake.

To lock the parking brake, pull the lever. To unlock the parking brake, pull the lever and press the button.

In the event of a battery fault, the emergency parking brake control cable is situated between the two front seats, at the back of the storage compartment, under the carpet.

Each time the emergency parking brake cable is used, it is essential to clear the generated fault with a diagnostic tool.

The parking brake locks automatically when the engine is switched off. It automatically unlocks when the vehicle starts moving.

When performing a hill start, pressing the panel will immobilise the vehicle on the gradient. The brake unlocks automatically when the torque required to move the vehicle reaches the driven wheels.Nevertheless, this function does not prevent stalling.

In the event of a fault in the principal braking circuit while driving, the automatic parking brake system offers a dynamic emergency braking system. It is also equipped with a system preventing unwanted rear wheel locking.

GETtheMANUALS.org

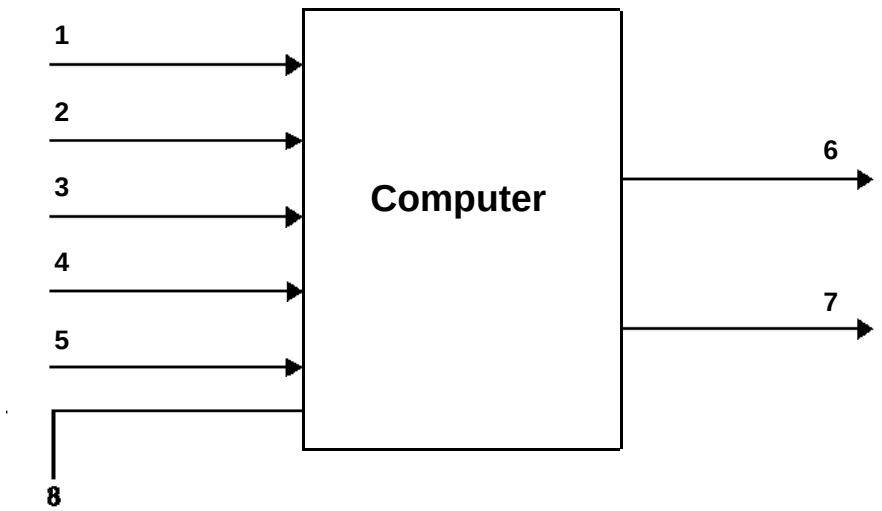

1 the panel is controlled manually.
2 The gradient sensor controls locking according to the angle of the gradient.
3 The force sensor checks and corrects the force applied to the brakes.
4 The clutch pedal position sensor measures the slippage point curve.
5 The wheel speed sensor is the ABS sensor. It measures abnormal movement of the vehicle when parking.
6 The control unit contains the electric motor, the rear brake cables and the gradient and force sensors.
7 The instrument panel indicator lights indicate locking, unlocking and a fault with the automatic braking system.
8 the emergency parking brake cable control (manual)

The parking brake cable play compensation is performed automatically by the control unit.

Recommendations and safety issues

On vehicles fitted with the automatic parking brake, the Renault card must be removed to prevent the rapid discharge of the battery and to prevent the system unlocking erratically.

The automatic parking brake can only be unlocked when the steering column is unlocked.

When the vehicle exceeds the Maximum permissable all-up weight (MMAC), it is possible to access an overlocking function by holding the lever in pull position for three seconds.

When parking in very cold conditions, it is advisable to unlock the brake **after** switching off the engine and **before** removing the Renault card to prevent the rear wheels becoming locked by ice.

In the case of vehicles fitted with automatic gear boxes, if the engine is running, the parking brake is locked, a gear is selected and the driver's door is open, unlocking is not possible.To return to normal operating mode (automatic unlocking on starting), move the gear selector lever to the P or N position.

GETtheMANUALS.org

REMOVAL

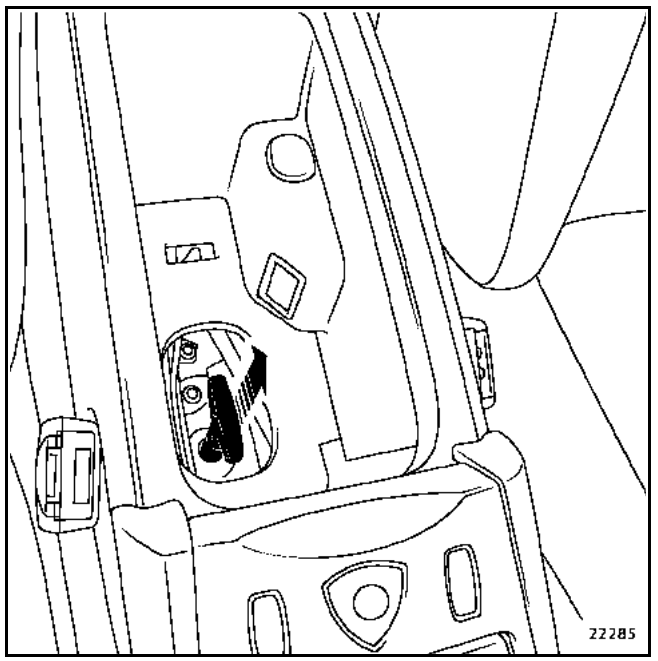

Gently pull the handle and pull out less than two centimetres of cable.

Remove the handle.

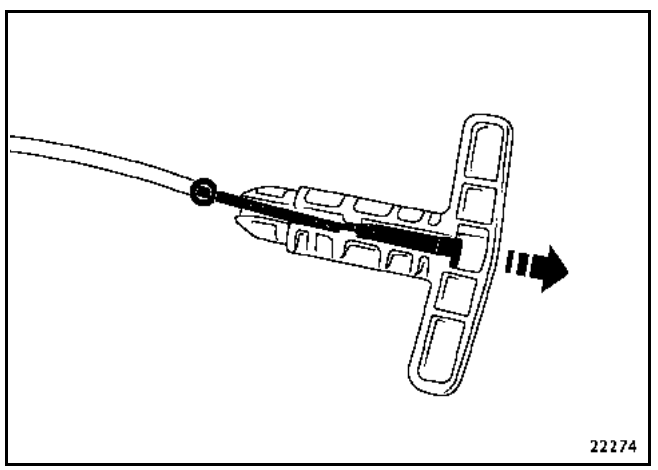

REFITTING

Carry out the removal procedure in reverse.

If you are not able to handle properly (cable too stretched), carry out the following operations.

With the ignition on, unlock the parking brake.
Proceed as follows:
pull the handle; press the button.

The automatic parking brake locking function is indicated by a sound. It lasts for several seconds and ends with a clicking sound.

The play compensation is set automatically.

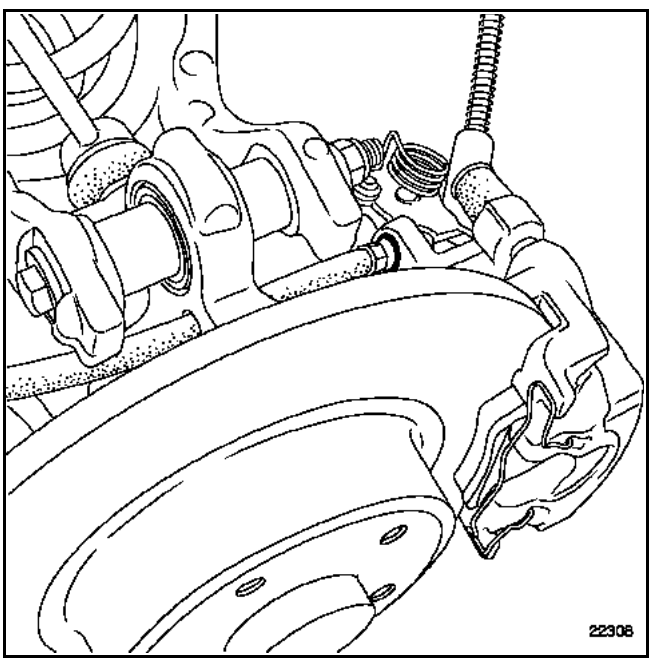

IMPORTANT: check that the cables are correctly fitted in their housing.

IMPORTANT: using a diagnostic tool, carry out a complete check and clear the generated fault.

GETtheMANUALS.org

TIGHTENING TORQUE (in daNm)	
Wheel bolts	**10.5**

The control unit is located near to the rear axle, behind the fuel reservoir.

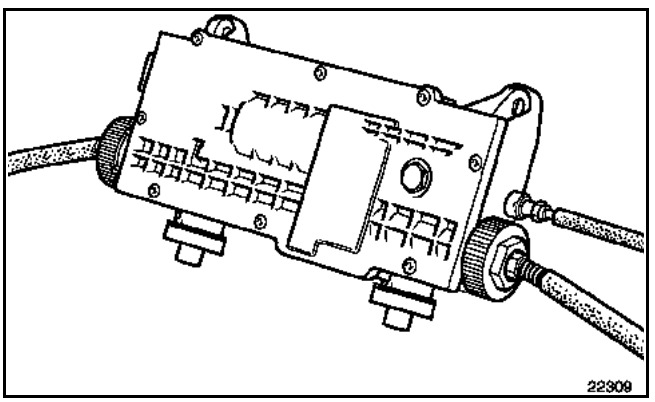

The following operations are carried out with the mounting in place.

REMOVAL

Disconnect the battery.

Remove:
– the rear hub caps (depending on equipment),
– the rear wheel mountings,
– the rear wheels.

Pull the emergency control. The slackened parking brake cable produces a sound. The handle is situated between the two front seats, at the back of the storage compartment, under the carpet.

Remove the handle.

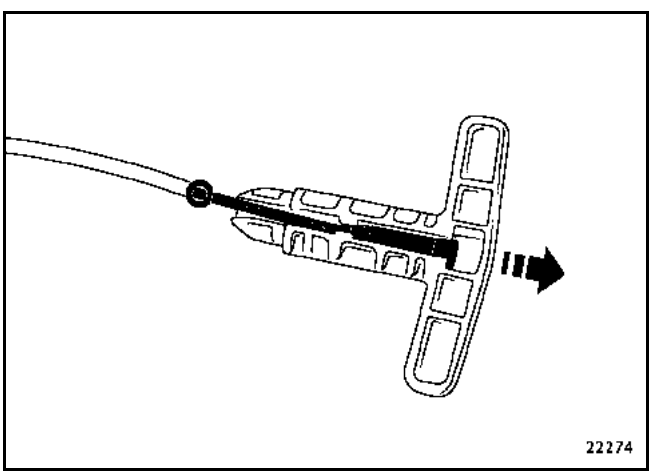

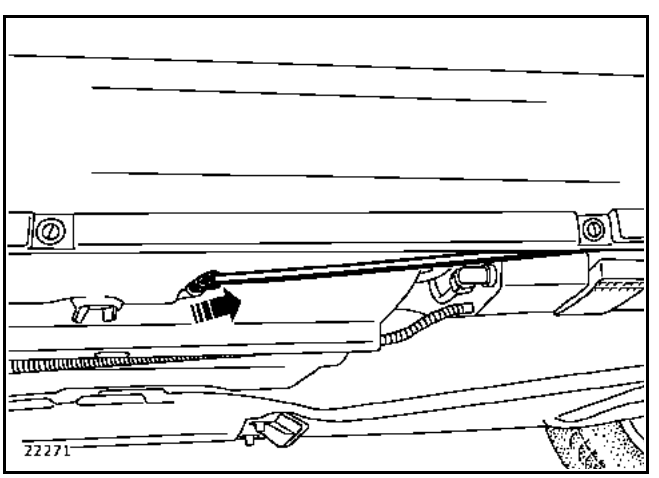

Pull on the emergency control cable from underneath the vehicle.

Remove the emergency control cable from its clips. Follow the routing observed during removal.

GETtheMANUALS.org

Unhook the parking brake cable ends.

Release the brake cables from the stub axle carriers.

Remove the left and right cables from the brackets.

Let the parking brake cables hang freely.

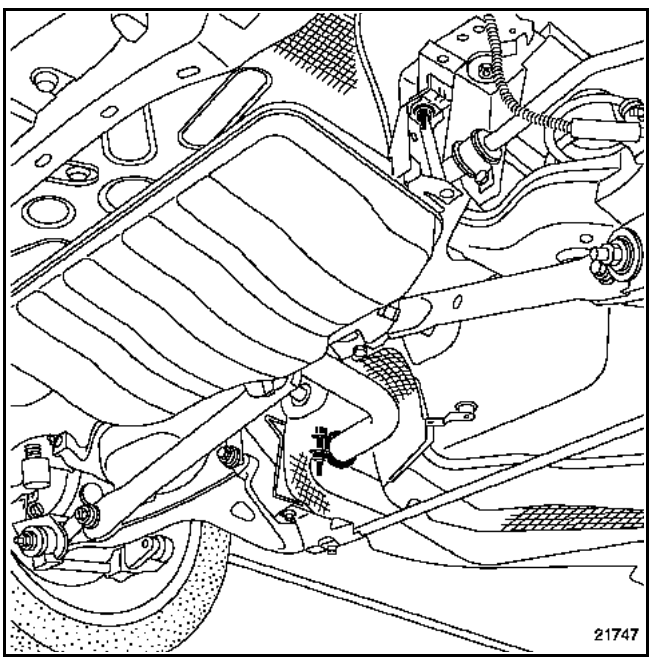

Disconnect the silencer from the exhaust pipe.

Remove the silencer.

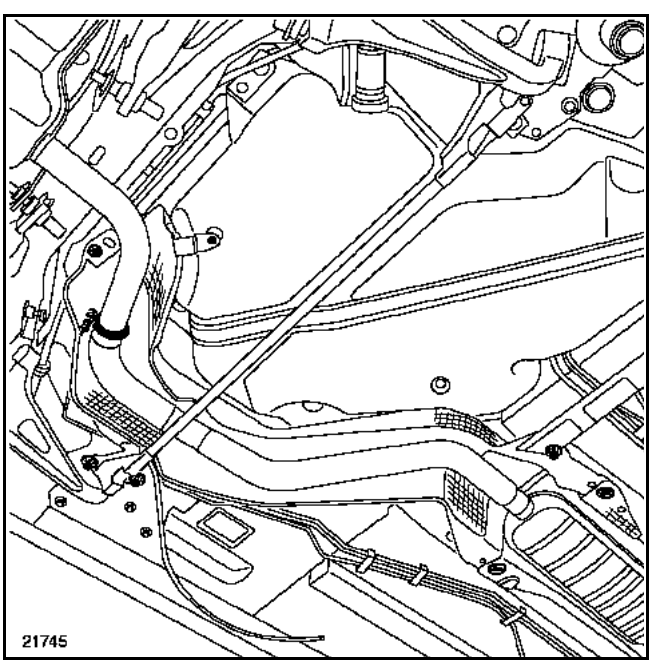

Remove the five heat protector mountings.

Release the heat shield at the bottom.

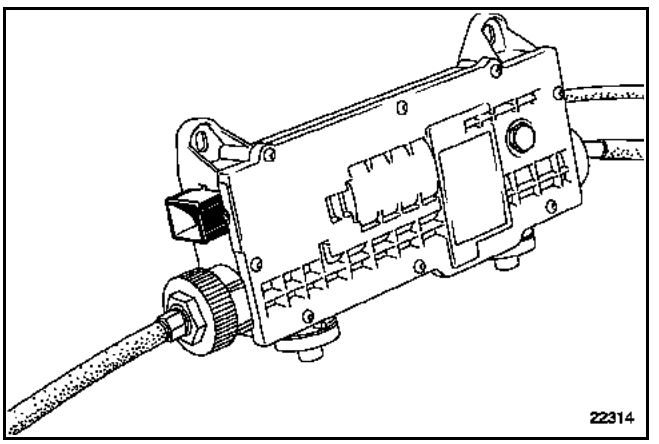

Disconnect the connector from the control unit.

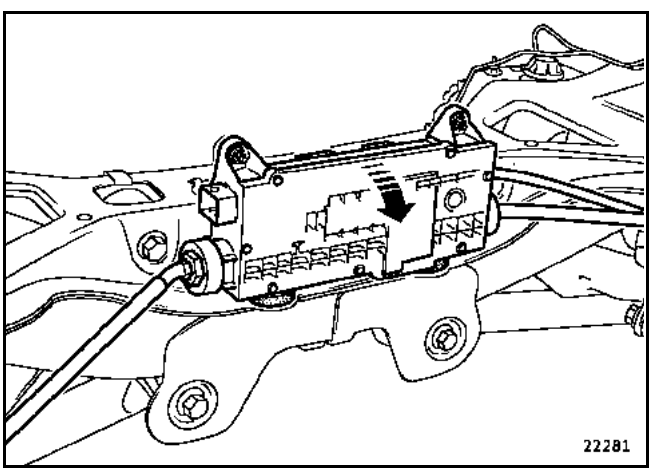

Remove the two control unit bolts (using a **10 mm** gauge and **45 mm** long socket).

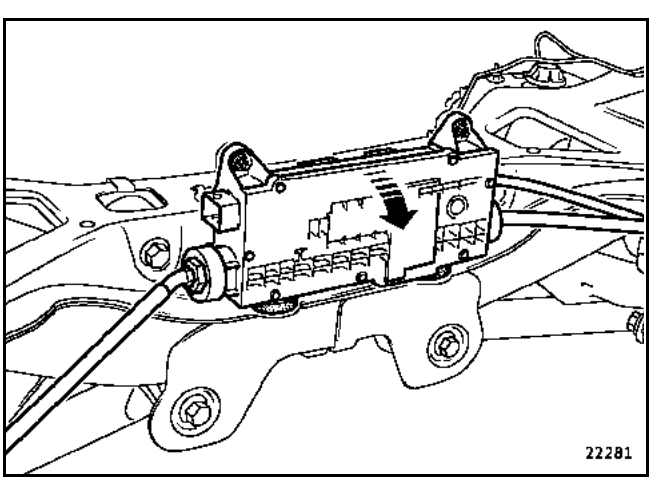

GETtheMANUALS.org

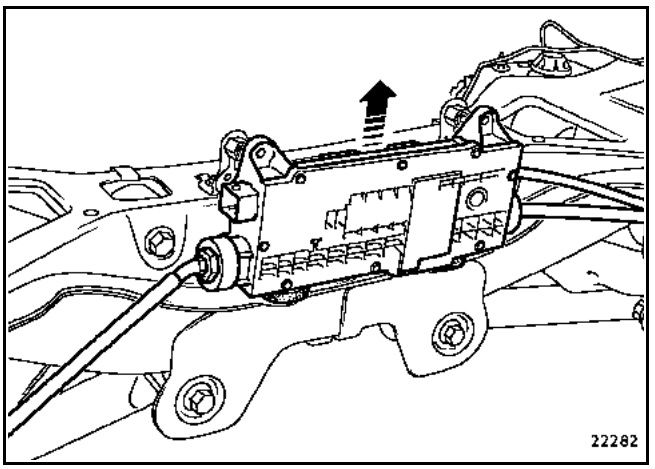

To remove the control unit, turn the unit towards the front. Push the control unit upwards. Release the rubber mountings from the mounting openings.

Simultaneously remove the two parking brake cables and the emergency brake cable.

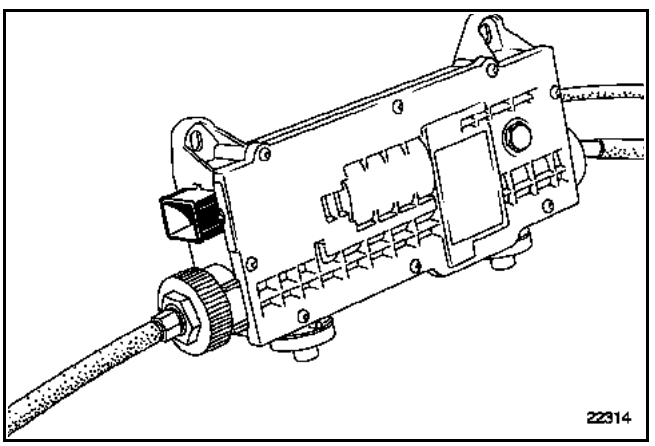

REFITTING

Replace the three above mentioned cables as follows. Place the control cable back in its clips. Follow the routing observed during removal.

Place the parking brake cables back in their mounting.

Insert the control unit into its housing and push it towards the back so that the rubber mountings can be inserted into the openings.

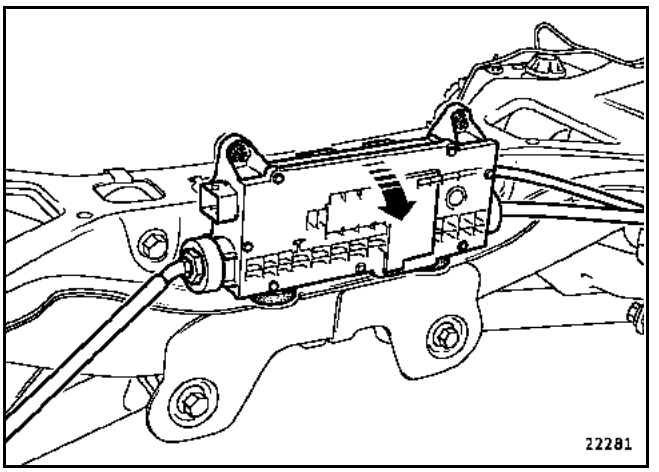

Refit the two control unit nuts.

Put the emergency control cable back in the passenger compartment entry opening.

Insert the emergency control cable sheath end in the opening to immobilise this cable.

Position the parking brake cables. Attach the parking brake cables.

Refit the five heat protector mountings.

Connect the silencer and the exhaust pipe.

Refit:
– the rear wheels,
– the wheel mountings (torque tighten),
– the hub caps (depending on equipment).

In the passenger compartment, replace the emergency control cable in the handle. Refit the carpet.

Connect the battery.

With the ignition on, release the parking brake. Proceed as follows:
pull the handle; press the button.

NOTE: the automatic parking brake locking function is indicated by a sound. It lasts for several seconds and ends with a clicking sound.

The play compensation is set automatically.

GETtheMANUALS.org

IMPORTANT: check that the cables are correctly fitted in their housing.

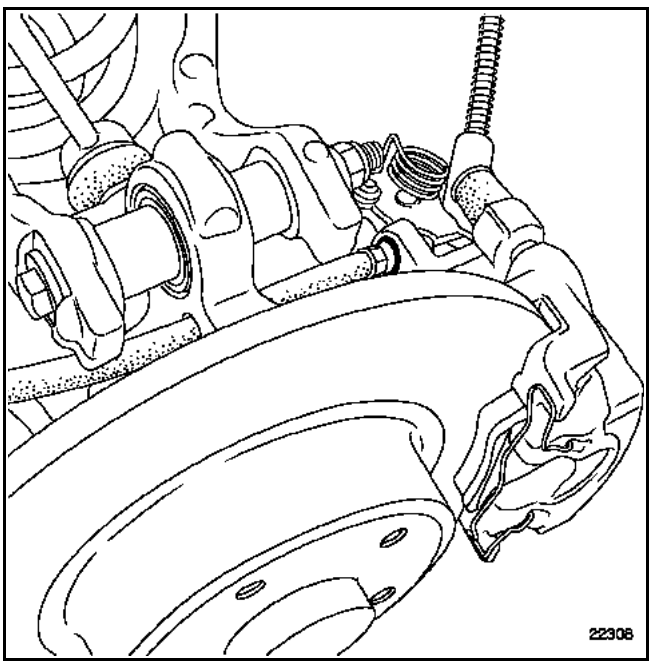

IMPORTANT: using a diagnostic tool, carry out a complete check and clear the generated fault.

Configure the new control unit using a diagnostic tool. Refer to the Workshop Repair Manual **Fault Finding in Section 37B**.

GETtheMANUALS.org

Exchanging two automatic parking brake cables

The following operations are carried out with the mounting in place.

REMOVAL

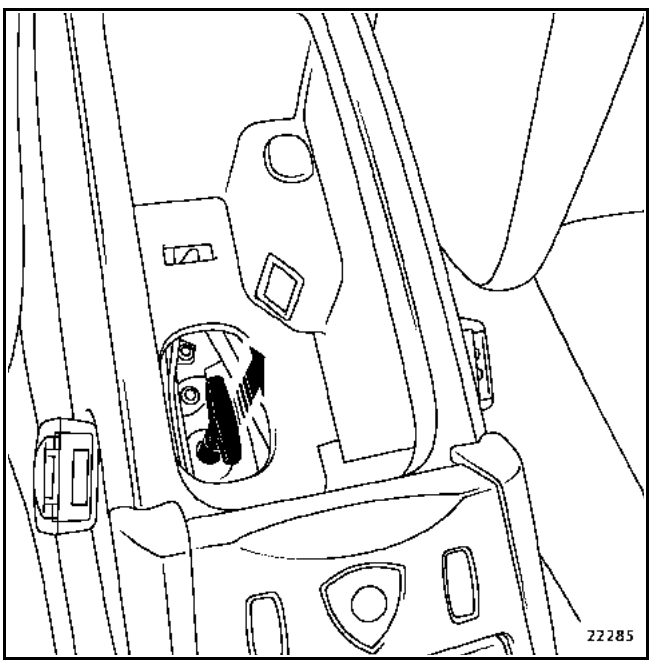

Pull the emergency control handle.

This handle is located between the two front seats, at the back of the storage compartment, under the carpet.

Remove:
– the handle,
– the rear hub caps (depending on equipment),
– the wheel mountings,
– the wheel.

Unhook the parking brake cable ends.

Release the parking brake cables.

Remove the left and right cables from the brackets.

Let the parking brake cables hang.

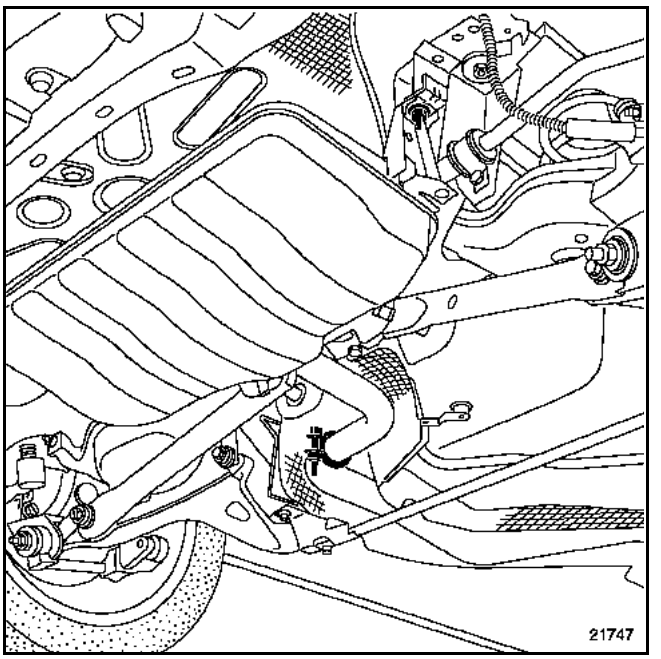

Disconnect the silencer from the exhaust pipe.

Remove the silencer.

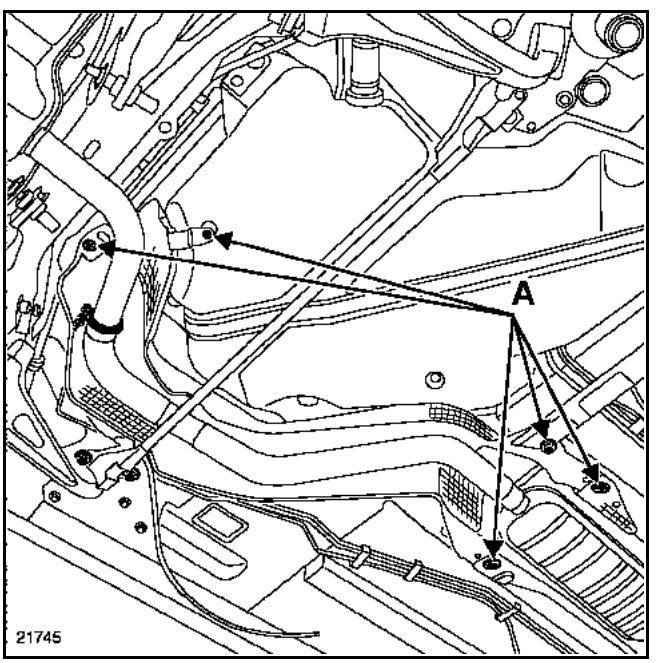

Remove the five heat shield mountings (A).

Release the heat shield at the bottom.

Disconnect the connector from the control unit.

GETtheMANUALS.org

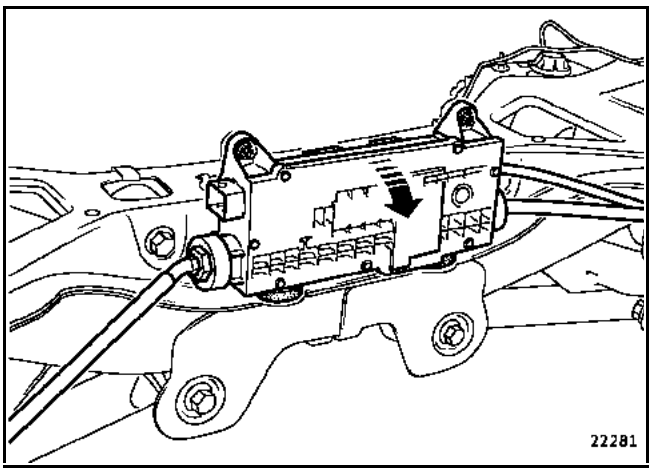

Remove the two control unit bolts.

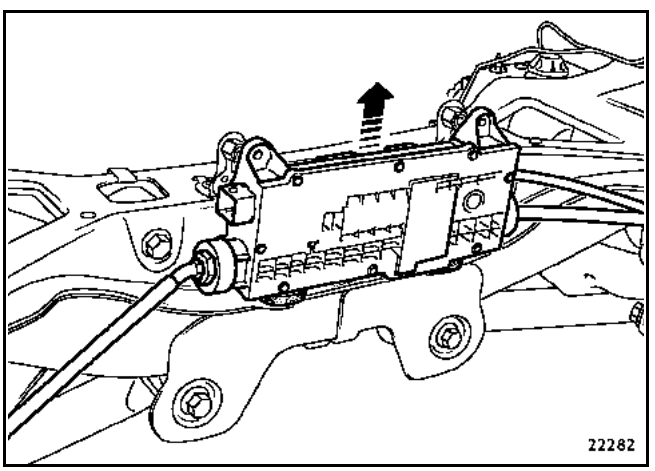

To remove the control unit, pull the unit upwards. Release the rubber mountings. Turn the control unit towards the front.

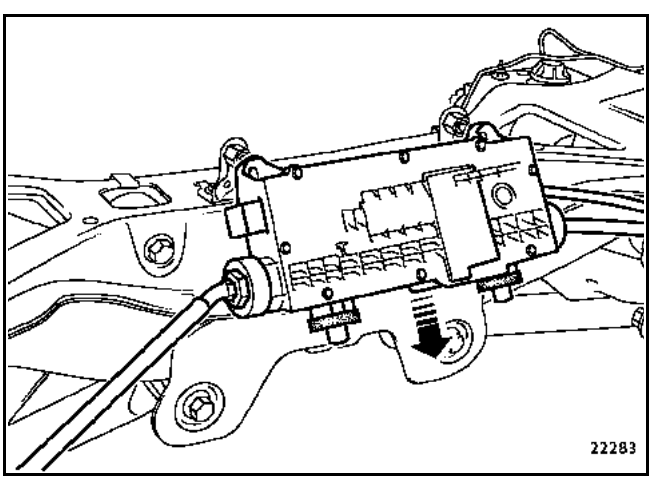

Pull out, but do not remove, the control unit.

Suspend the control unit.

Simultaneously remove the two parking brake cables and the emergency brake cable.

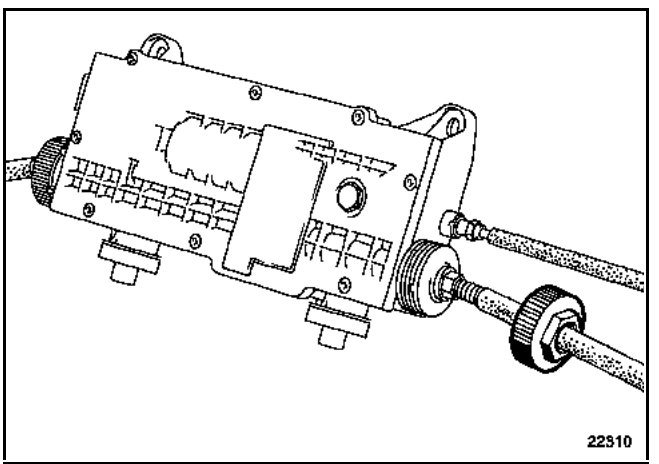

Insert the control unit shaft in fully on the LH side.

On the LH side, undo the plastic nut on the control unit.

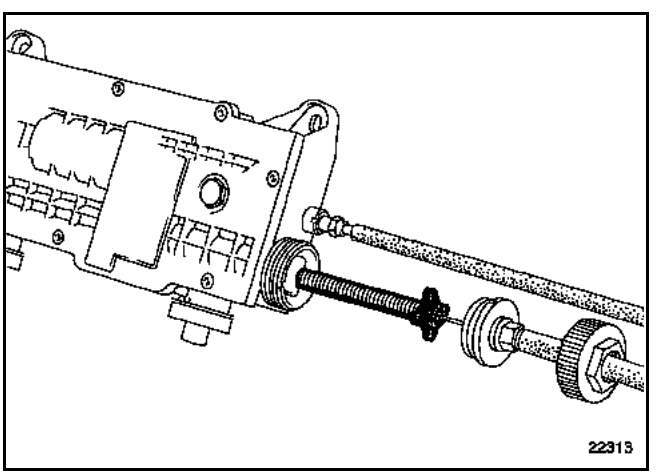

Remove the threaded rod on the splined shaft.

Remove the LH cable.

Insert the control unit shaft in fully on the RH side.

GETtheMANUALS.org

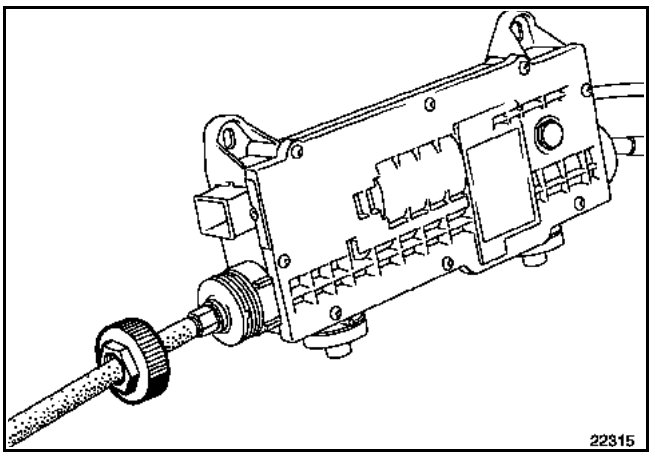

On the RH side, undo:
– the plastic nut on the control unit,
– the locking ring.

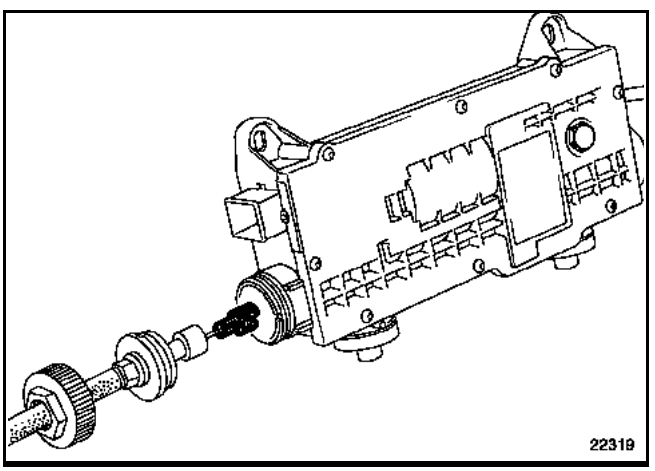

Uncouple the force sensor cable.

REFITTING

Insert the control unit shaft in fully on the LH side.

On the LH side, refit:
– the threaded rod in the splined rod, tighten five turns,
– and the crosspiece correctly.

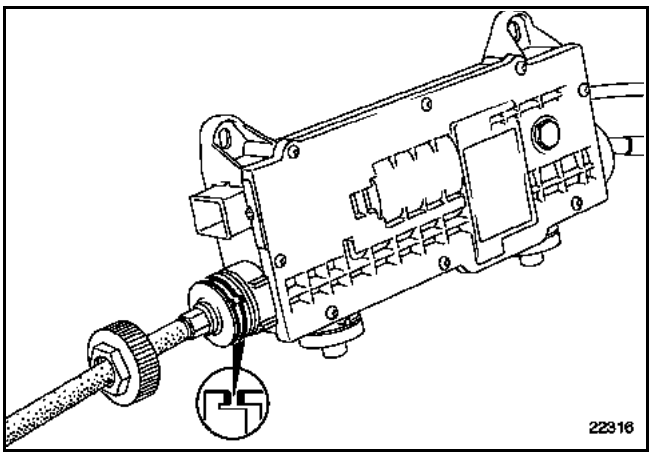

Check the condition of the O-ring. Place the pin in notch (T).

Refit the plastic nut on the control unit.

Insert the control unit shaft fully into the RH side.

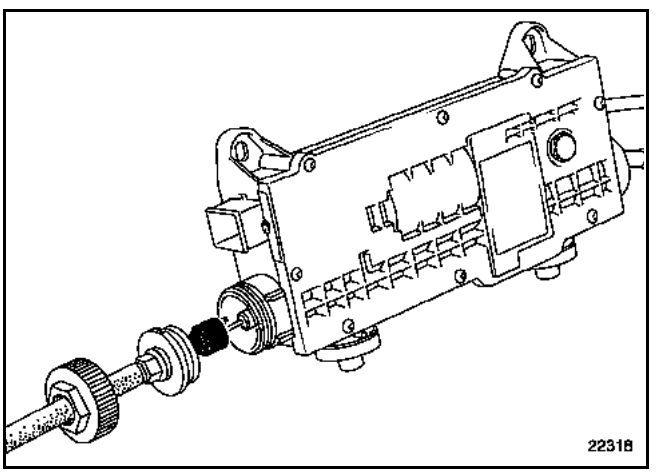

From the RH side, pull the locking ring.

Attach the brake cable to the force sensor cable.

Check the condition of the O-ring. Place the pin in notch (T).

Refit the plastic nut.

GETtheMANUALS.org

Place the cables on the cable supports.

Connect the brake cables. Reattach the brake parking brake cable ends.

Connect the silencer to the exhaust pipe.

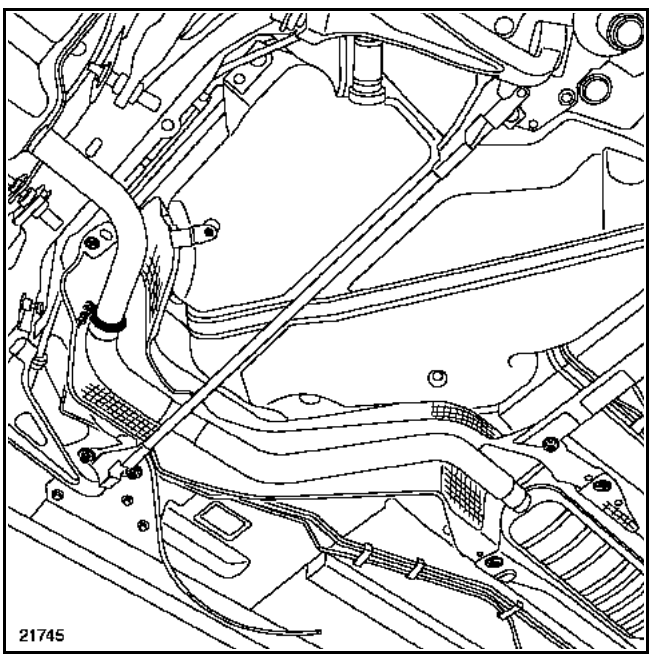

Refit:
– the five rear heat shield mountings.
– the rear wheels,
– the wheel mountings (torque tighten),
– the hub caps (depending on equipment).

In the passenger compartment, replace the emergency control cable in the handle. Refit the carpet.

Connect the battery.

With the ignition on, release the parking brake. Proceed as follows:
pull the handle; press the button.

NOTE: the automatic parking brake locking function is indicated by a sound. It lasts for several seconds and ends with a clicking sound.

The play compensation is set automatically.

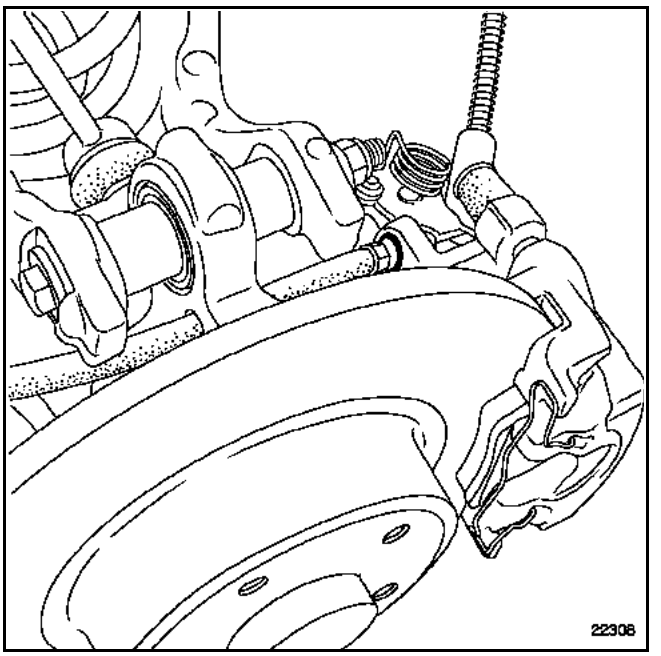

IMPORTANT: check that the cables are correctly fitted in their housing.

If they are not, remove the LH parking brake cable. Refit it turning the screw the correct number of times: five turns.

IMPORTANT: using a diagnostic tool, carry out a complete check and clear the generated fault.

GETtheMANUALS.org

the unit is located on the instrument panel, to the left of the steering wheel.

CONNECTION

Track	Description
1	Not used
2	Earth
3	Not used
4	Static release control
5	Activating indicator light control
6	+ Battery
7	Connection with the computer (**track C2**)
8	Not used
9	Connection with the computer (**track D2**)
10	Static release control
11	Not used
12	Panel lighting supply

CHECKING

Track	Value	Description
2 and **4**	**∞**	
10 and **2**	**0 Ω**	Static activating
9 and **7**	**172 Ω**	
2 and **4**	**0 Ω**	Static release
2 and **10**	**0 Ω**	
9 and **7**	**172 Ω**	
9 and **7**	**2700 Ω**	Rest position
10 and **2**	**∞**	
2 and **4**	**∞**	

REMOVAL

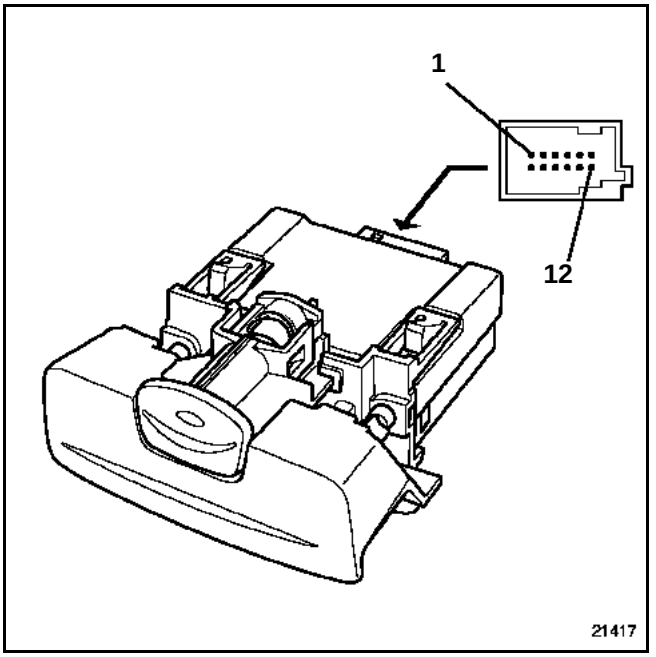

Remove:
– the cover, located on the lower section of the panel,
– the two bolts located on the lower section.

Pull out the panel system.

Disconnect the connector.

Remove the panel system.

REFITTING

Proceed in the reverse order to removal.

GETtheMANUALS.org

REMOVAL

Disconnect:
– the battery;
– the connector.

Unscrew:
– the section linked to the pedal by moving lock (A) and (1), and sliding it,
– the sensor body by moving bolt (B).

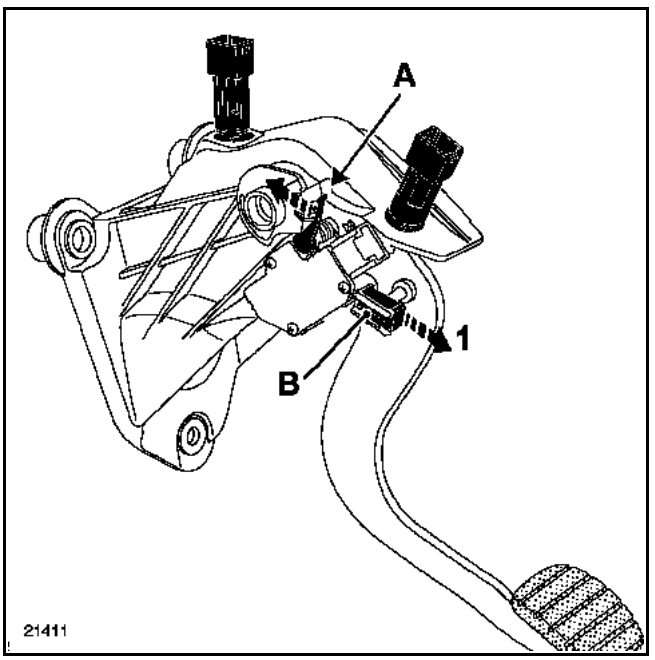

(2) Tilt the sensor. Be careful not to break the lower mounting bracket (C).

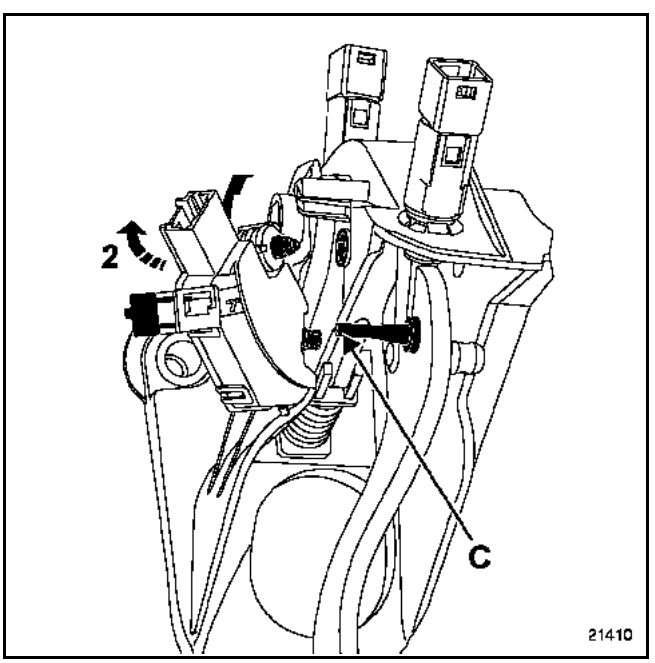

REFITTING

Proceed in the reverse order to removal.

GETtheMANUALS.org

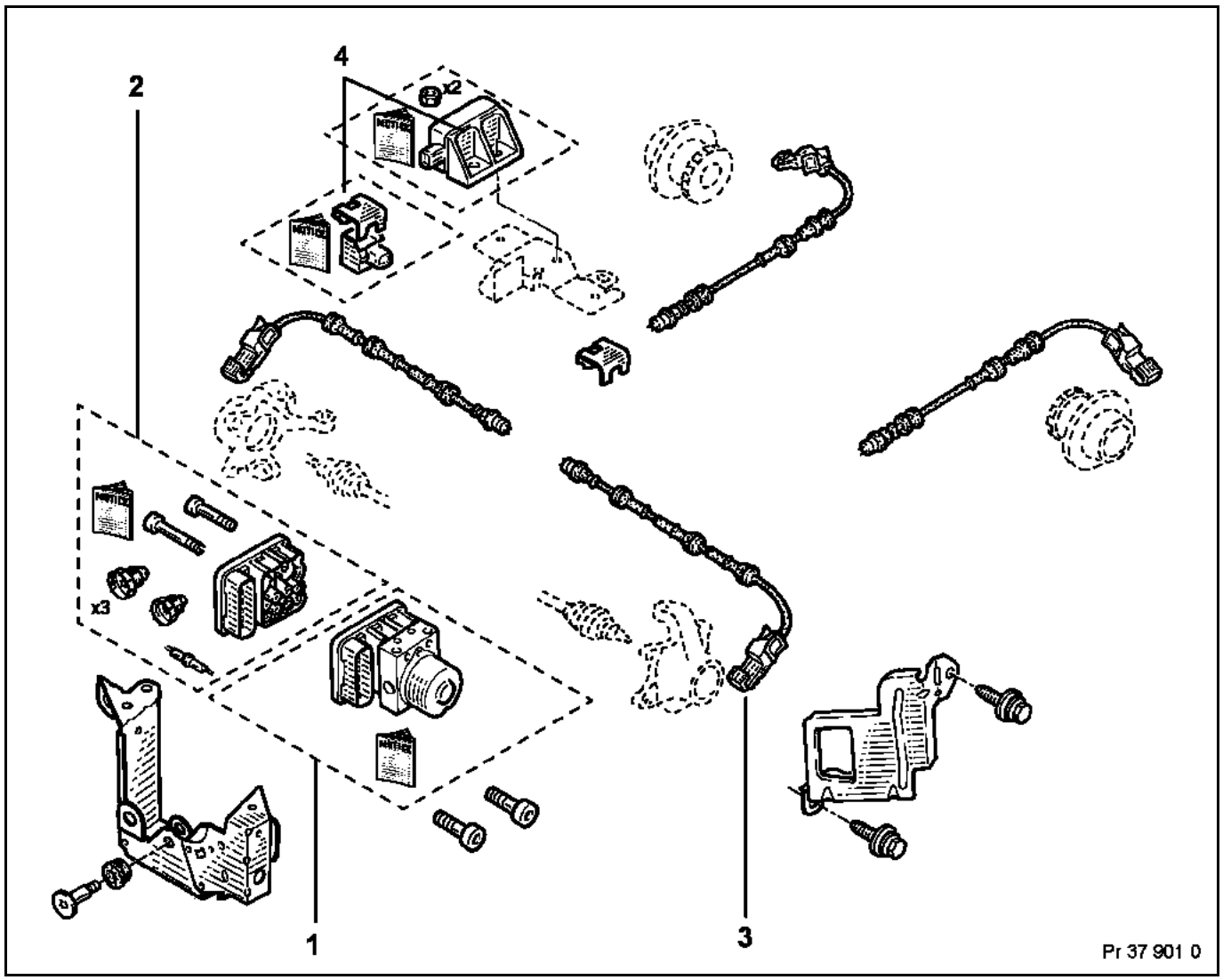

1 Hydraulic pump with pressure modulation unit
2 Anti-lock Braking System / Electronic Stability Program computer
3 Wheel speed sensor
4 Combined yaw speed and lateral acceleration sensor

GETtheMANUALS.org

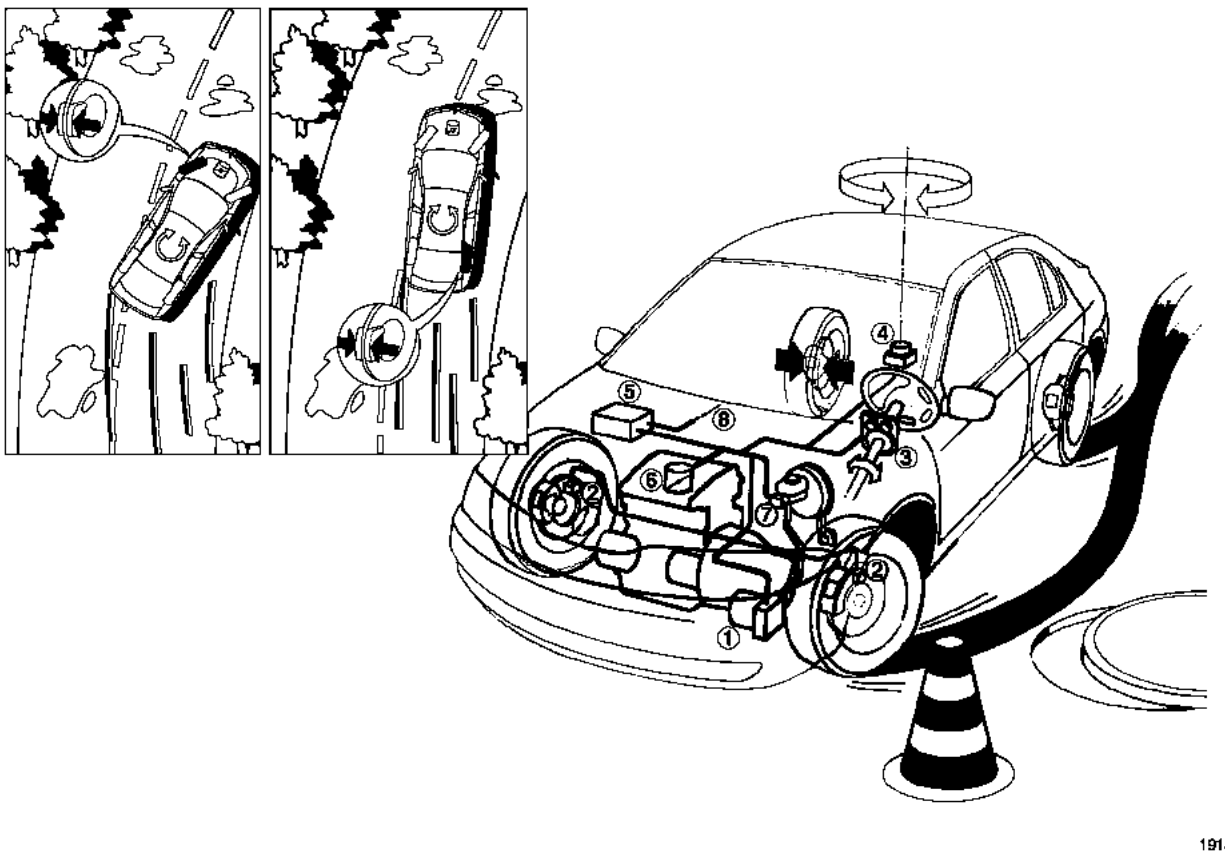

1 Hydraulic unit
2 Wheel speed sensor
3 Steering wheel angle sensor
4 Combined yaw speed and lateral acceleration sensor
5 Engine management computer
6 Motorised throttle body
7 Pressure sensor at the master cylinder
8 CAN connection

GETtheMANUALS.org

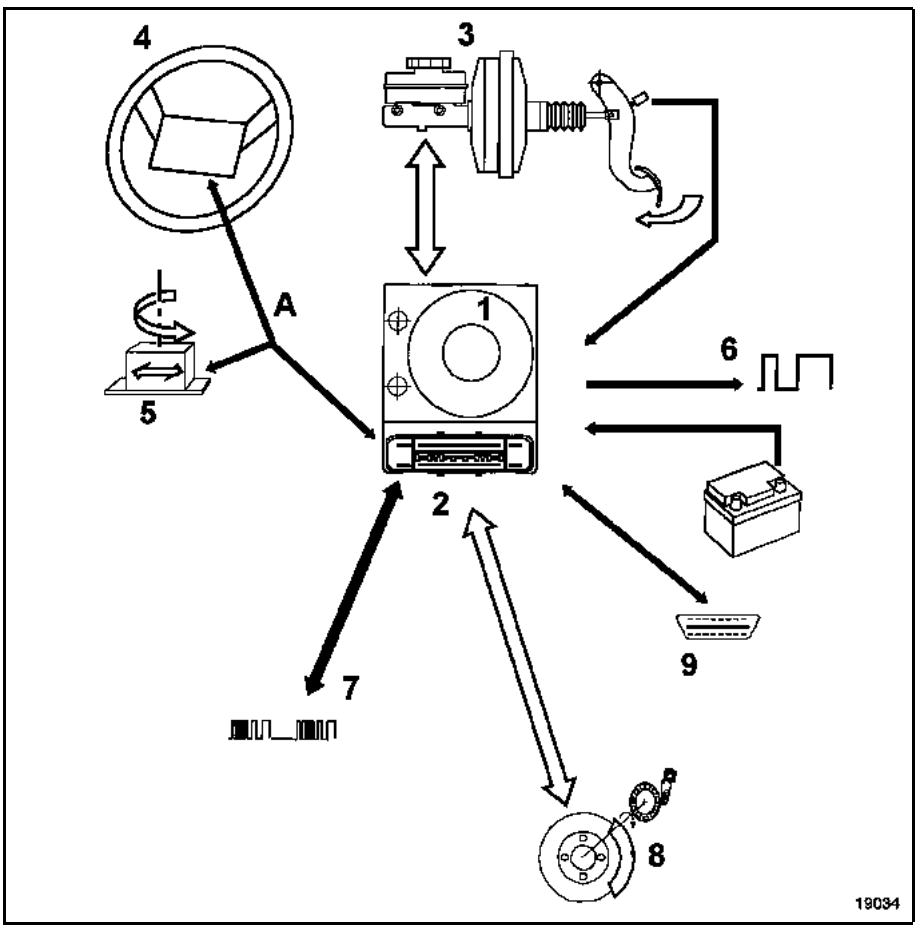

1 Hydraulic unit
2 Computer
3 Brake servo
4 Steering wheel angle sensor
5 Combined yaw speed and transverse acceleration sensor
6 Speedometer (vehicle speed)
7 CAN network
8 Wheel speed sensor
9 Diagnostic socket
10 ESP disconnection push-button.
A Vehicle CAN network

GETtheMANUALS.org

TIGHTENING TORQUES (in daNm)	
Brake pipes on the unit	**1.4**
Aluminium side member tie-rod bolts	**4.4**
Aluminium side member bolts	**4.4**

The MK 60 hydraulic unit incorporates twelve solenoid valves.

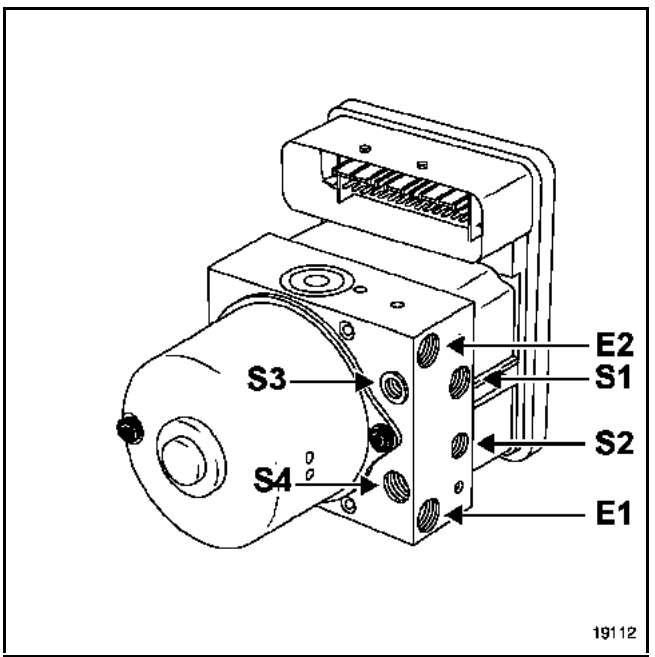

E1 master cylinder primary circuit
E2 master cylinder secondary circuit
S1 output to left-hand front wheel
S2 output to right-hand front wheel
S3 output to right-hand rear wheel
S4 output to left-hand rear wheel

The hydraulic unit is located at the front left-hand side of the vehicle, behind the front bumper.

REMOVAL

Disconnect the battery.

Remove:
– the wheels,
– the left wheel arch,
– the front of the right-hand wheel arch,
– the fog light connections,
– the bumper,
– the Anti-lock Braking System hydraulic unit connector,

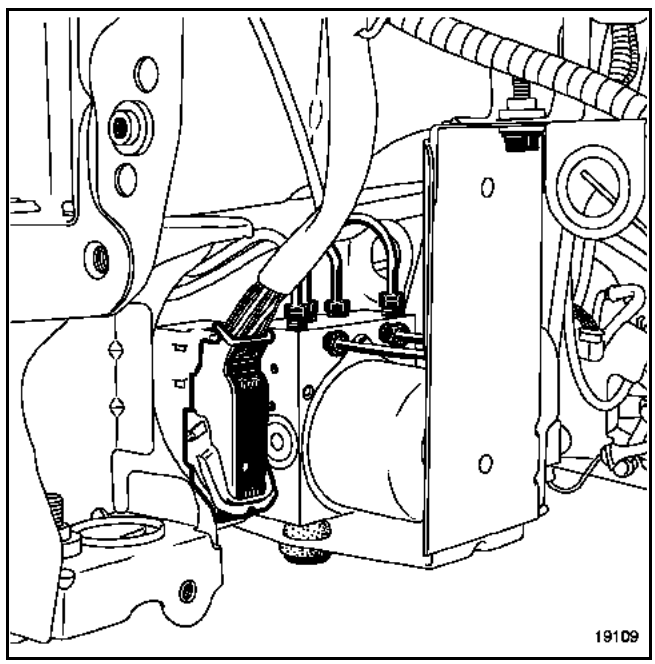

– the Anti-lock Braking System hydraulic unit upper pipes,
– the Anti-lock Braking System hydraulic unit lower pipes,

GETtheMANUALS.org

– the pipe mounting clips on the mounting,
– both left-hand tie-rods (1)

Unscrew but do not remove the two front bolts (2) of the aluminium side member.

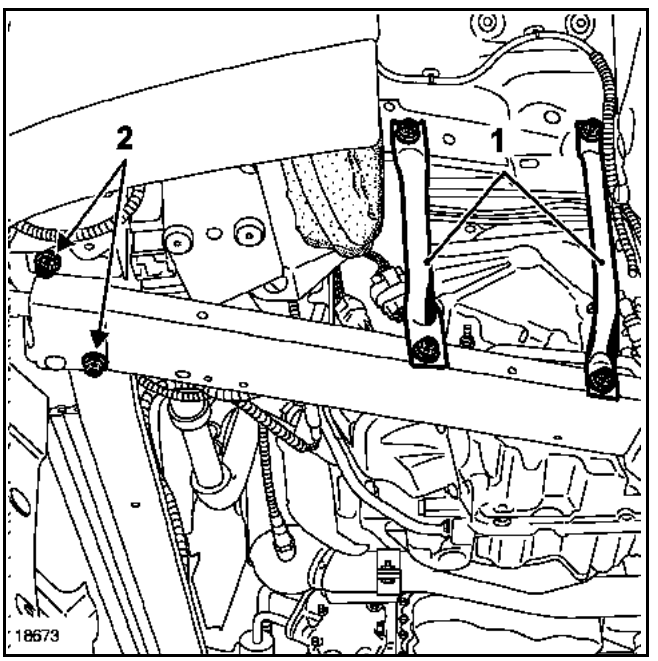

Remove:
– the three Anti-lock Braking System hydraulic unit mounting bolts,
– the three Anti-lock Braking System hydraulic unit mounting bolts on its mounting,
– the Anti-lock Braking System hydraulic unit.

REFITTING

Carry out the removal procedure in reverse.

Bleed the braking system (see relevant procedure).

GETtheMANUALS.org

REMOVAL

Removing the computer does not require the entire hydraulic unit to be removed.

Remove:
– the two bolts (C) on the hydraulic pump,

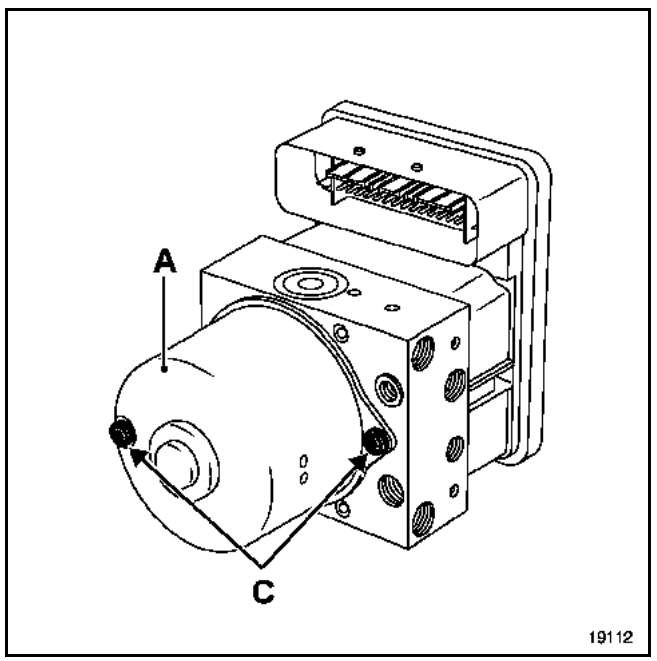

– the computer.

IMPORTANT: when it is being removed, hydraulic pump (A) must be pressed onto the pressure modulation unit.

REFITTING

When a new computer is being fitted, remember to attach interconnection fork (B) between the pressure modulation unit and the computer.

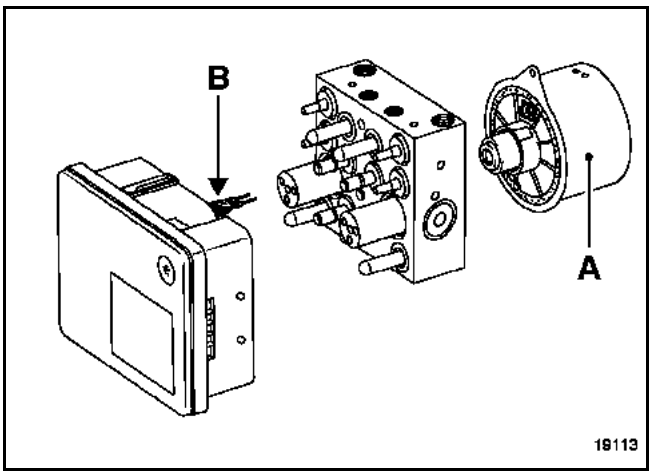

GETtheMANUALS.org

The Electronic Stability Program uses a steering wheel angle sensor to measure the direction selected by the driver. This signal is interpreted as a driver command.

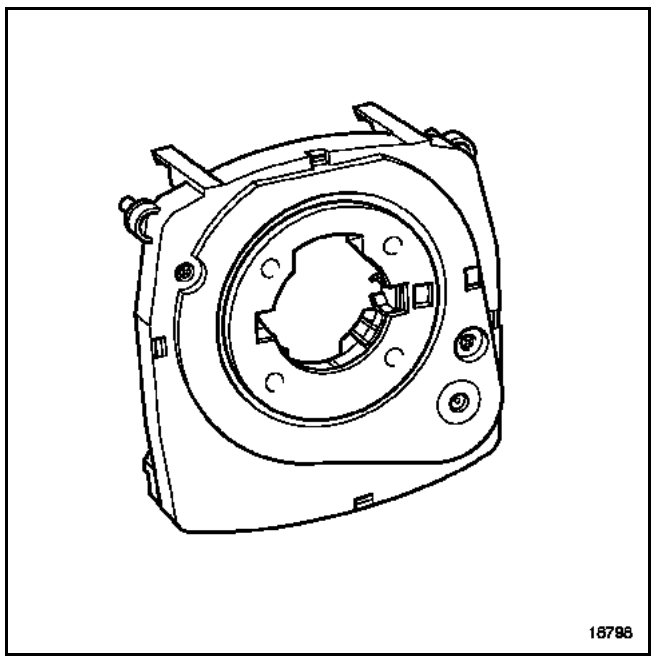

This sensor is located on the steering column and is clipped onto the rotary switch assembly.

REMOVAL

Set the vehicle wheels straight.

Before performing any operation on the airbag systems, lock the computer using the diagnostic tools.
Refer to **Section 88C**.

Remove:
– the driver's front airbag module,

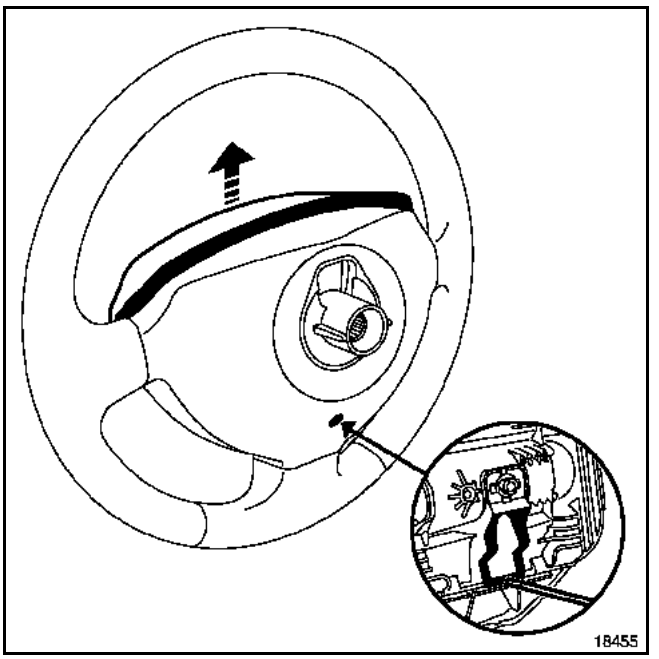

– the air bag connectors,
– the connectors in the steering wheel,
– the steering wheel bolt,

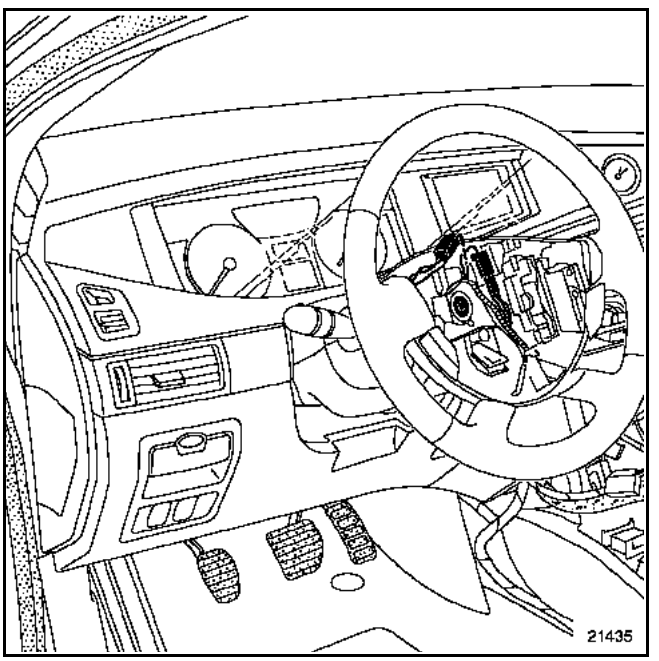

GETtheMANUALS.org

– the two mounting bolts for the half-shells,
– the upper half-shell,
– the lower cowling.

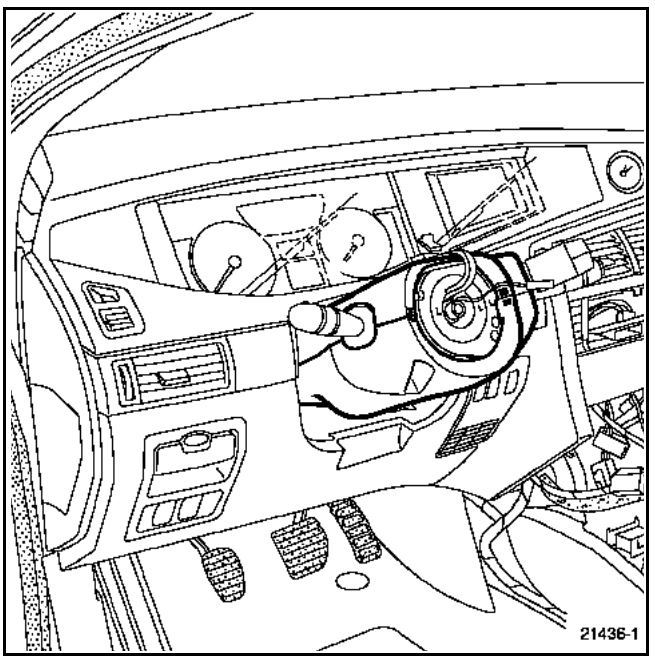

Disconnect the connector from the steering wheel angle switch.

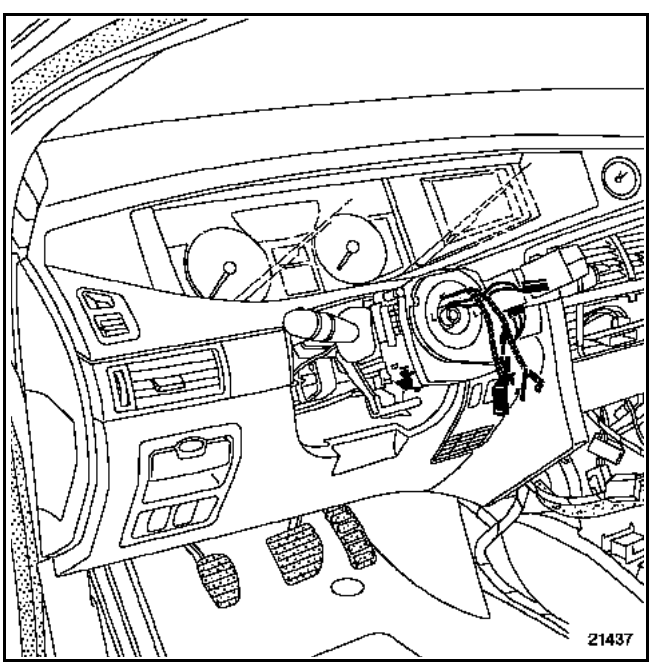

Lift up the upper and lower clips in pairs by gently tilting the sensor body.

Remove the steering wheel angle sensor.

REFITTING

If the sensor is new, remove its pin. Keep the yellow mark visible in the centre of the window.

Centre the sensor using the guides.

Lock the four clips.

Carry out the removal procedure in reverse.

IMPORTANT: the steering wheel splines are made so that the wheel can only be fitted one way. **The steering wheel should fit back into the splines easily.** Take care not to damage the splines.

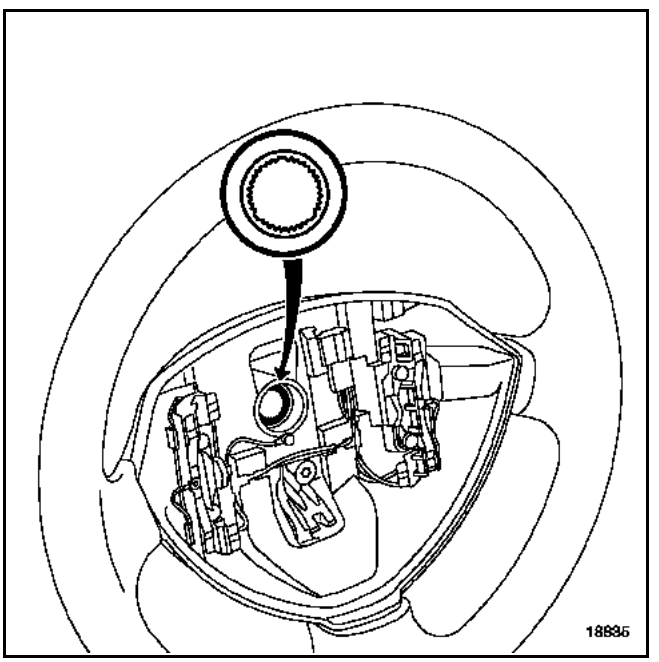

The steering wheel bolt and washer must be replaced each time they are removed. Torque tighten (to 4.4 daNm).

GETtheMANUALS.org

STEERING WHEEL ANGLE SENSOR CALIBRATION

Switch on the ignition.

Turn the steering wheel to an angle greater than **4°**, corresponding to approximately 1 cm of the circumference of the steering wheel rim. This activates the sensor.

Position the vehicle with the wheels straight and the steering wheel horizontal (with a tolerance of less than **± 15°** on this angle).

Establish dialogue with the Electronic Stability Program computer using the diagnostic tool.

Run sensor programming procedure: **UP003**.

When the operation has been successfully completed, clear the faults from the air bag computer.

Unlock the air bag computer.

Refer to **section 88C**.

Switch off the ignition.

GETtheMANUALS.org

TIGHTENING TORQUE (in daNm)	
Sensor nut	0.8

The combined unit for the two sensors is located behind the gear lever.

REMOVAL

In the passenger compartment

Remove:
– the gear lever gaiter,
– the centre console upper plate.

Disconnect the connectors.

Remove:
– the two mounting nuts (F) for the combined sensor plate,

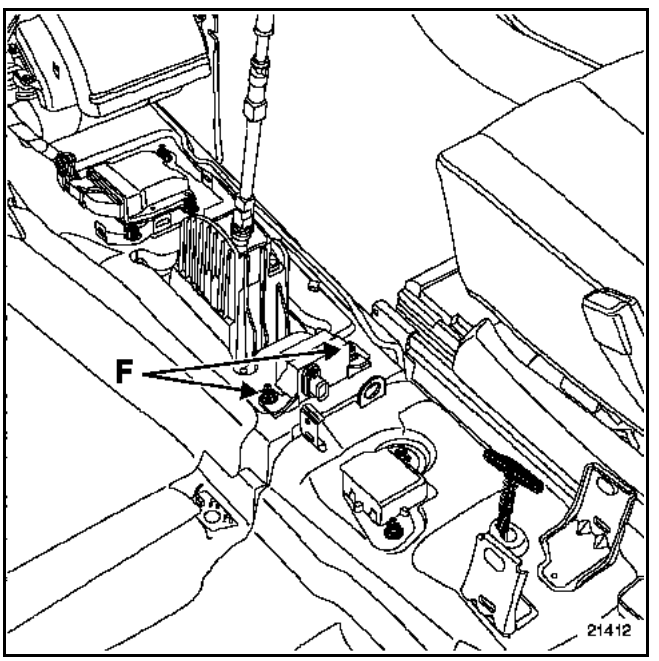

– the combined sensor plate.

REFITTING

Carry out the removal procedure in reverse.

GETtheMANUALS.org

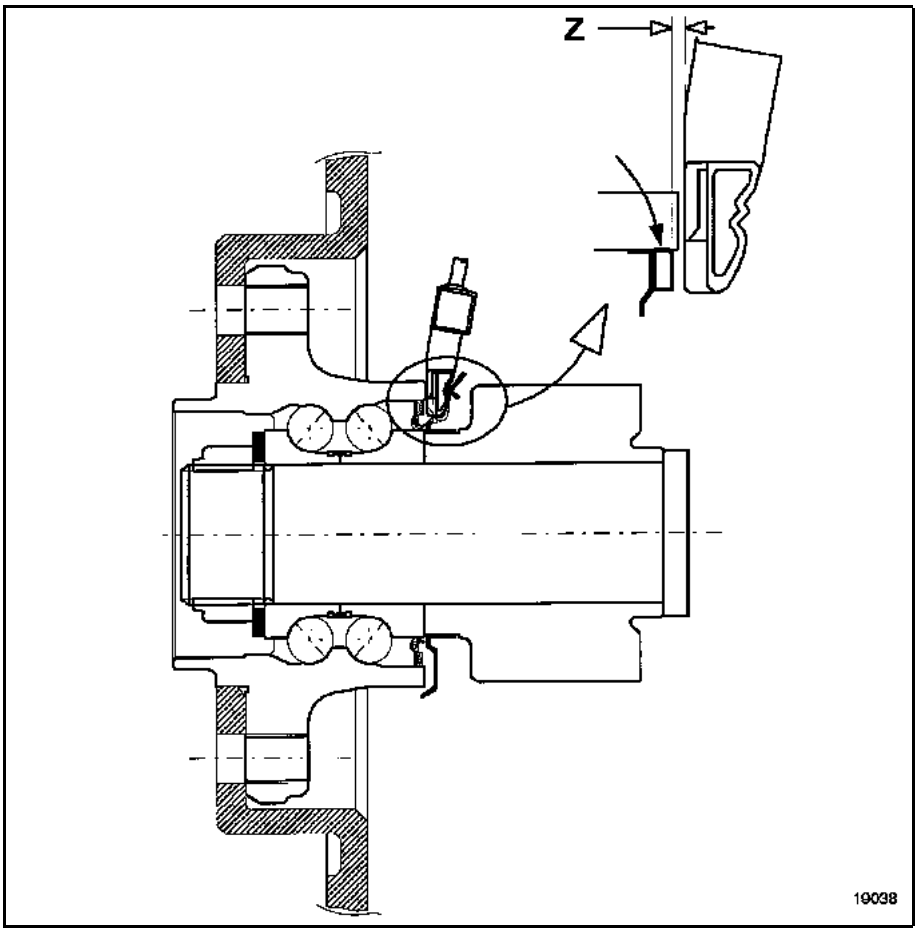

GETtheMANUALS.org

REMOVAL

Using a flathead screwdriver, free the sensor holder tab at (G).

Remove the sensor without pulling on the wire.

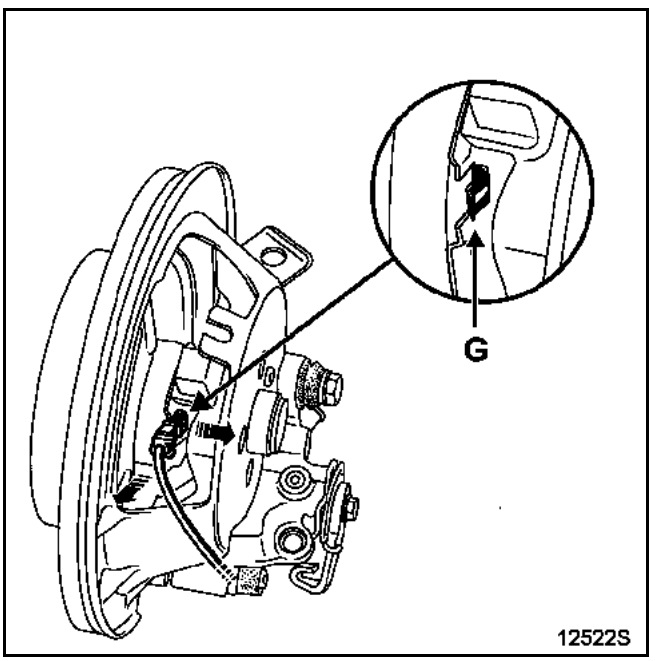

Disconnect the sensors:
– at the front, from the connector housings behind the wheel arch (A),

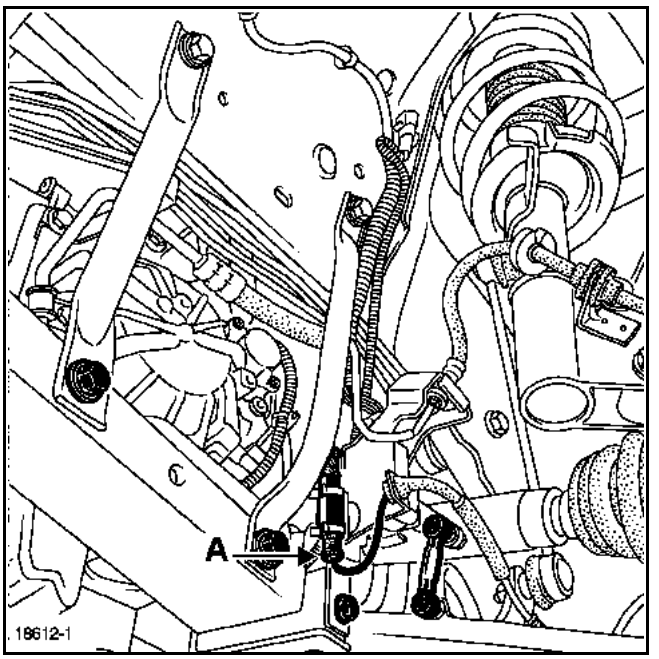

– at the rear, in the wheel arches behind the wheel arch liner.

REFITTING

Clip the connectors in place.

Connect the connectors in the same order they were removed.

(The air gap for the front **Z = 0.6 mm**, the rear **Z = 0.8 mm** with a tolerance of **± 0.5 mm**).

NOTE: It is essential to make sure that the connectors are correctly connected to prevent risk of breakdowns.

The sensor must be fitted manually. Do not knock it when installing it.

Do not pull on the ABS wiring because it is easily damaged.

GETtheMANUALS.org

TIGHTENING TORQUE (in daNm)	
Pressure sensor	2.5

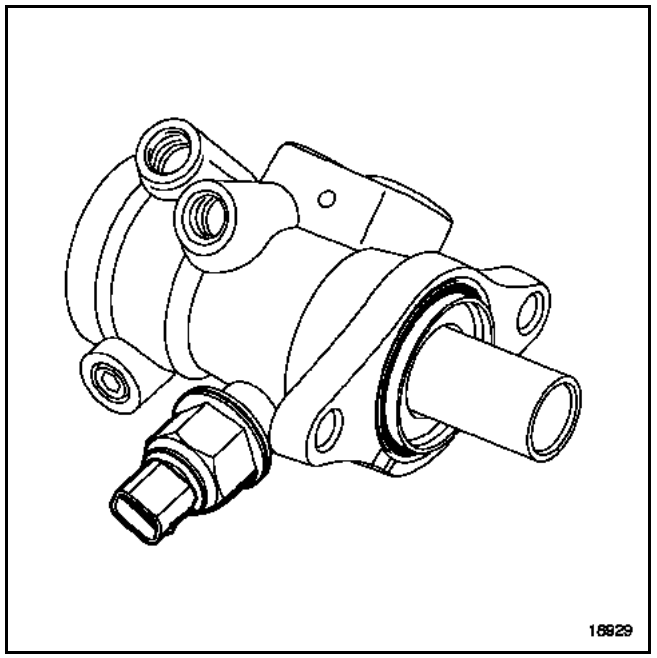

It informs the computer of the hydraulic pressure in the master cylinder.

REMOVAL

Place the vehicle on a lift.

Attach the pedal lock to prevent fluid from escaping.

IMPORTANT: drain the brake fluid to prevent damage to the mechanical parts and bodywork around the braking system.

Remove:
– the air filter hose,
– the expansion bottle.

Fill the new sensor using a syringe to avoid causing any air bubbles in the circuit.

NOTE: when the sensor has been filled, the brake fluid should form a dome on the sensor outlet.

Remove the pressure sensor using a cloth. Replace it immediately with the new pressure sensor.

REFITTING

Carry out the removal procedure in reverse.

GETtheMANUALS.org

SPECIAL TOOLING REQUIRED
Brake circuit bleeding device (approved by Renault) Diagnostic tool

To ensure its correct operation, a brake circuit must be free of gas (external air, water vapour etc.). Whenever the circuit is opened, the air entering the circuit must therefore be bled out after it is closed. When the brake fluid is old (see service intervals), this leads to a high level of humidity which may create steam in the circuit, in certain extreme conditions. When the fluid is old, the circuit must be drained completely and then the air contained in it must be bled.

Prerequisites for any bleeding of air from the brake circuit:
– make sure that there are no leaks in the fuel system,
– fill brake fluid reservoir (1) to maximum level,
– depress the brake pedal several times, so that the moving components of the braking system (pistons, brake shoes, discs or drums) all make contact with each other,
– Add brake fluid (1) to adjust the level in the reservoir.
– set up the bleeding device and top up brake fluid level (1) to its maximum (refer to the driver's handbook, the advised pressure being between **2 bar** and **2.5 bar**).

We distinguish between two types of air bleeding from the brake circuit:
– a conventional air bleed, which does not allow bleeding of air from the ABS hydraulic unit secondary circuit (2),
– bleeding of air from the regulation circuit; this bleed should be performed only if the brake pedal travel, considered correct following conventional bleeding (3), becomes incorrect.

(1) Brake fluid **SAEJ 1703 DOT4**
For optimized operation on vehicles fitted with the Electronic Stability Program, Renault recommends a brake fluid with low viscosity in cold conditions (maximum **750 mm^2/s at - 40°C**).

(2) The regulation circuit is inside the hydraulic unit. It is isolated from the conventional braking circuit insofar as the solenoid valves are not controlled by the diagnostic tool computer.

(3) Confirmed by a road test with the hydraulic unit regulation in operation.

GETtheMANUALS.org

THE CLASSIC OR CONVENTIONAL BLEED

This procedure must be used after one of the following components has been removed or replaced:
– the master cylinder,
– the pressure sensor,
– the hydraulic unit (new and pre-filled),
– a rigid pipe,
– a hose,
– a calliper.

Precautions to be taken during this braking circuit bleeding operation:
– The vehicle ignition must be off to ensure that the hydraulic unit solenoid valves do not operate.
– Check the brake fluid levels of the braking circuit and the bleeding device.

Connect the bleeding device to the braking circuit, paying attention to the features of this equipment (refer to the operating instructions).

Bleed the circuit by opening the bleed screws in the following order (remember to close them after the operation):
– rear right-hand circuit,
– front left-hand circuit,
– rear left-hand circuit,
– front right-hand circuit.

With the engine switched off, check the pedal travel, if it is not correct, restart the bleeding procedure.

Top up the brake fluid level in the reservoir having disconnected the bleeding device. Check the tightness of the bleed screws and that the sealing caps are all present.

Confirm the efficient regulation of the hydraulic unit by performing a road test.

The effectiveness and balance of the vehicle braking system may be checked on a brake test bench or by performing a road test.

NOTE: the braking circuit is the X type, therefore it is possible to carry out an isolated bleeding operation on a single circuit (when the hose, calliper etc. are being replaced).

GETtheMANUALS.org

BLEEDING THE REGULATION CIRCUIT

NOTE: this bleed must only be carried out if the brake pedal travel, judged to be correct at the end of a classic bleed (confirmed by a road test with hydraulic unit regulation in operation), becomes incorrect.

This procedure must be used if the hydraulic unit is suspected of containing air (whether or not it has been removed).

Precautions to be taken during this braking circuit bleeding operation:
– Check the brake fluid levels of the braking circuit and the bleeding device.

Connect (refer to the operating instructions):
– the bleeding device to the vehicle braking circuit,
– the diagnostic tool.

Carry out a Conventional bleed.

Repeat these operations (1) on each circuit following the described order (2):

(1) Repeat these operations:
– Depress the brake pedal several times.
– Activate the circuit solenoid valve using the diagnostic tool.
– Open the bleed screw*. Once the air has been removed, close the bleed screw again.

* While the solenoid valve is being activated, keep the pedal fully depressed.

(2) Bleed the circuits in the following order:
– rear right-hand (diagnostic tool command **AC156**),
– front left-hand (diagnostic tool command **AC153**),
– rear left-hand (diagnostic tool command **AC155**),
– front right-hand (diagnostic tool command **AC154**).

Top up the brake fluid level in the reservoir having disconnected the bleeding device. Check the tightness of the bleed screws and that the sealing caps are all present.

During a road test, trigger braking regulation to confirm that the brake pedal travel is correct. If this is not correct, bleed the regulation circuit again.

The effectiveness and balance of the vehicle braking system may be checked on a suitable brake test bench.

GETtheMANUALS.org

VEL SATIS

6 Air conditioning

61A HEATING

62A AIR CONDITIONING

BJ0E - BJ0J - BJ0K - BJ0M - BJ0P - BJ0V

77 11 311 082 **FEBRUARY 2004** **EDITION ANGLAISE**

"The repair methods given by the manufacturer in this document are based on the technical specifications current when it was prepared.

The methods may be modified as a result of changes introduced by the manufacturer in the production of the various component units and accessories from which his vehicles are constructed."

All copyrights reserved by RENAULT.

Copying or translating, in part or in full, of this document or use of the service part reference numbering system is forbidden without the prior written authority of RENAULT.

© RENAULT 2004

GETtheMANUALS.org

Air conditioning

Contents

Page

61A HEATING

General Vehicle Information	61A-1
Operating principles	61A-5
Particle filter	61A-10
Front control panel	61A-12
Rear control panel	61A-15
Control cable	61A-16
Air conditioner	61A-18
Radiator	61A-20
Front fan assembly	61A-24
Rear fan assembly	61A-26
Front electric control	61A-28
Rear electric control	61A-30

62A AIR CONDITIONING

General Vehicle Information	62A-1
Consumables	62A-4
Operating principles	62A-5
Particle filter	62A-6
Condenser	62A-8
Dehydration canister	62A-12
Compressor	62A-15
Sized port	62A-19
Evaporator	62A-23
Connecting pipe	62A-31
Pressure sensor	62A-47
Speed variation module	62A-50
Recirculation motor	62A-52
Mixing motor	62A-54
Distribution motor	62A-58
Evaporator sensor	62A-61
Passenger compartment temperature sensor	62A-63
Exterior temperature sensor	62A-64
Humidity sensor	62A-65
Insolation sensor	62A-66
Air quantity sensor	62A-67

GETtheMANUALS.org

AIR DISTRIBUTION

Designation of air distributors in the passenger compartment.

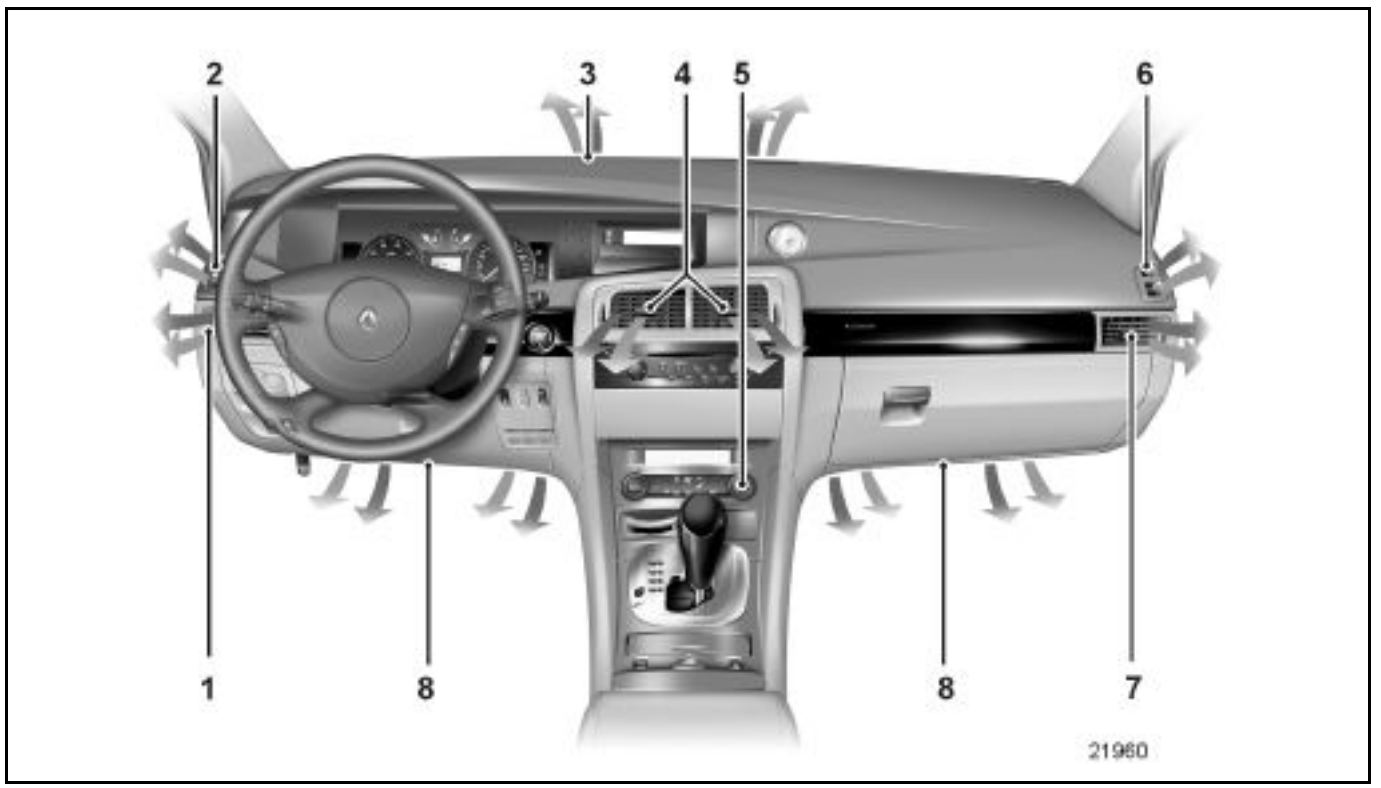

1 Left-hand side air vent
2 Left-hand side window demister vent
3 Windscreen demisting vents
4 Centre air vents
5 Control panel
6 Right-hand side window demister vent
7 Right-hand side air vent
8 Footwell heating outlet for front passengers

GETtheMANUALS.org

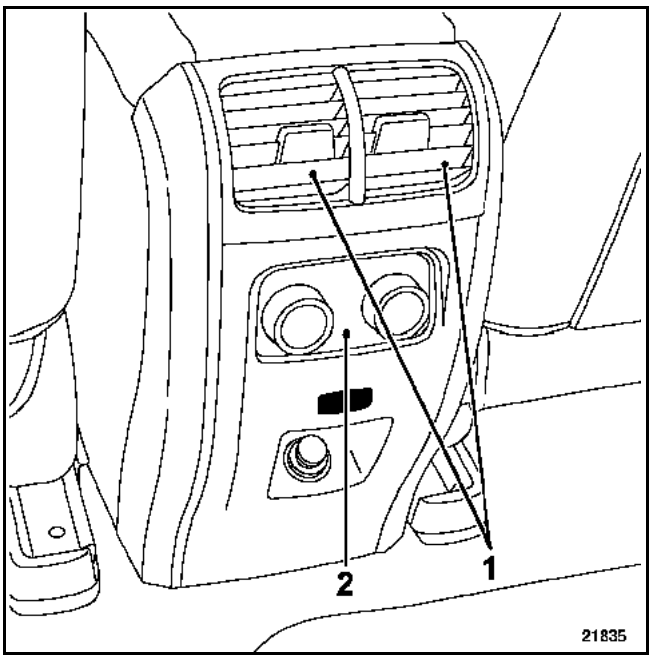

1 Centre air vents
2 Control panel

GETtheMANUALS.org

Footwell heating outlets for rear passengers.

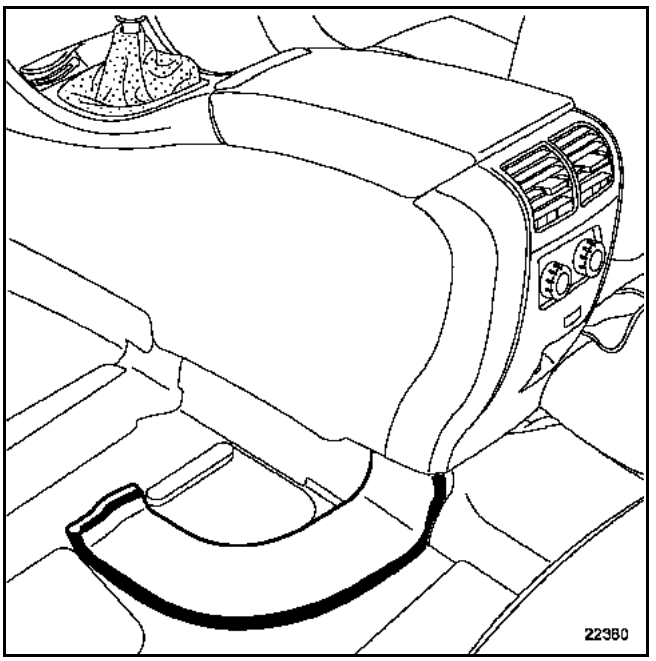

Heating duct

REMOVAL

Place the vehicle on a lift.

Disconnect the battery.

Remove the front seat concerned, (see section **75A Front seat frames and runners** (Complete seat)).

Lift up the carpet.

Disconnect and remove the air duct.

NOTE: the centre console does not need to be removed to perform this operation.

REFITTING

Carry out the removal procedure in reverse.

TIGHTENING TORQUE (in daNm)	▽
Front seat mounting nut	**4.4**

GETtheMANUALS.org

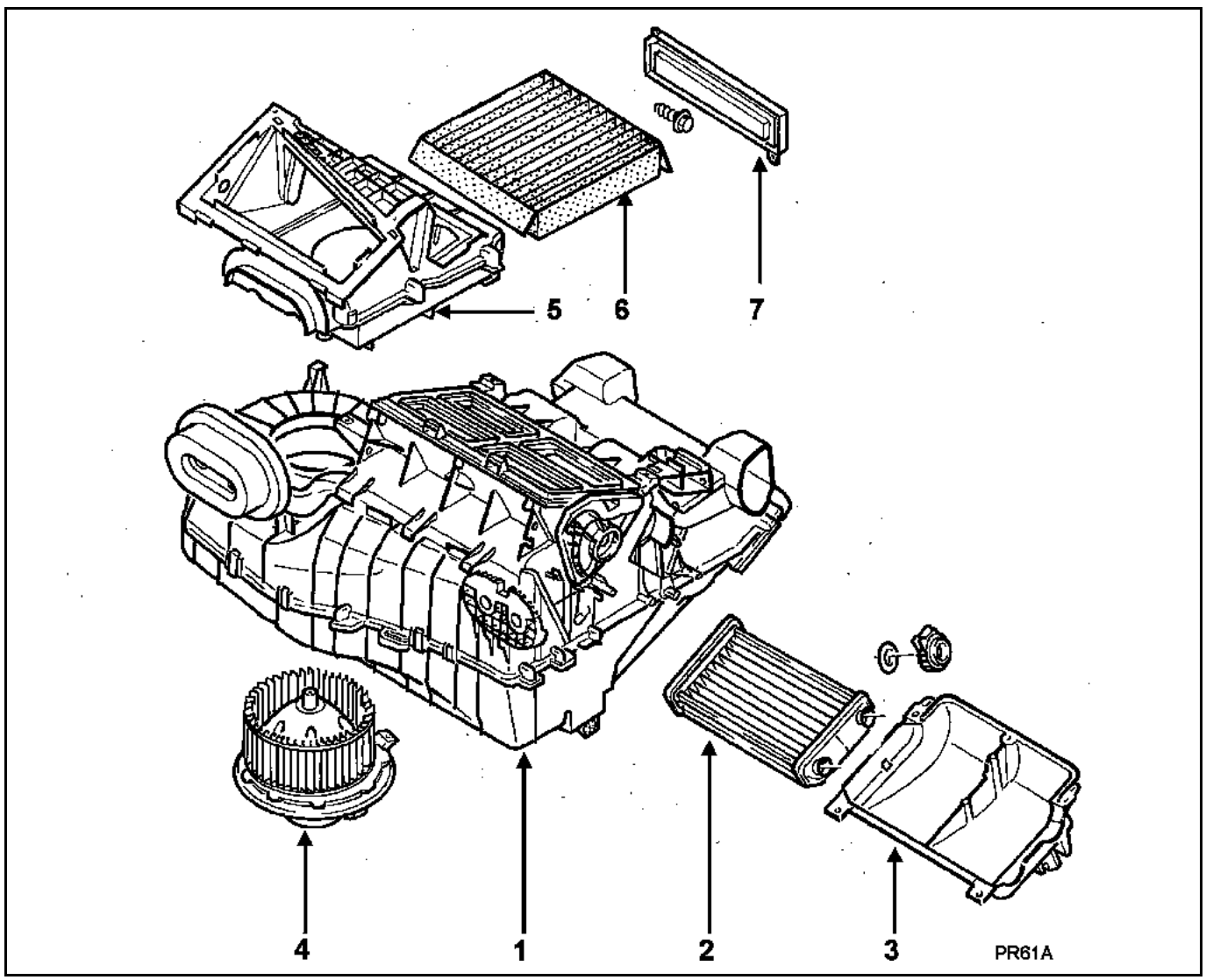

1 Air conditioning compartment
2 Heater radiator
3 Heater radiator cover
4 Engine cooling fan
5 Air intake unit
6 Passenger compartment filter
7 Passenger compartment filter cover

GETtheMANUALS.org

FRONT CONTROL PANEL

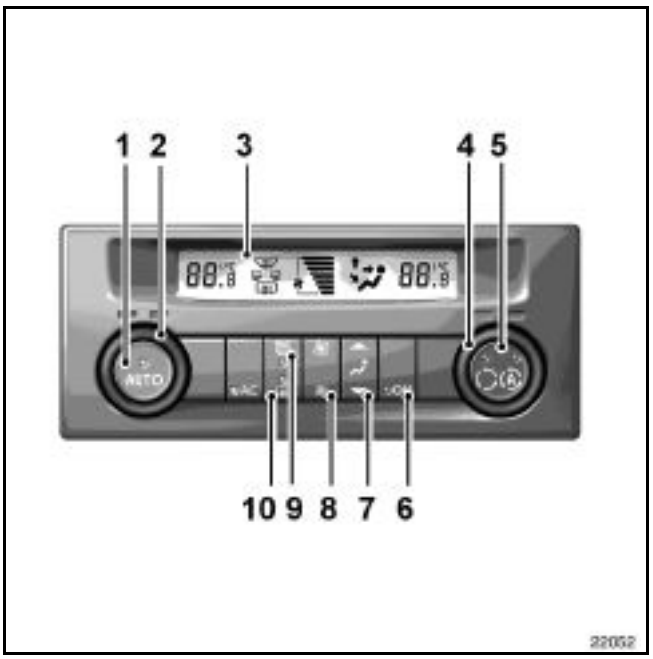

1 Automatic mode operation key
2 Left-hand side temperature adjustment key
3 Display
4 Right-hand side temperature adjustment key
5 Air recirculation and automatic recirculation key
6 System OFF button
7 Air distribution adjustment key
8 Air flow adjustment key
9 "See Clear" key to demist and de-ice the windows
10 Rear screen de-icing key

GETtheMANUALS.org

REAR CONTROL PANEL

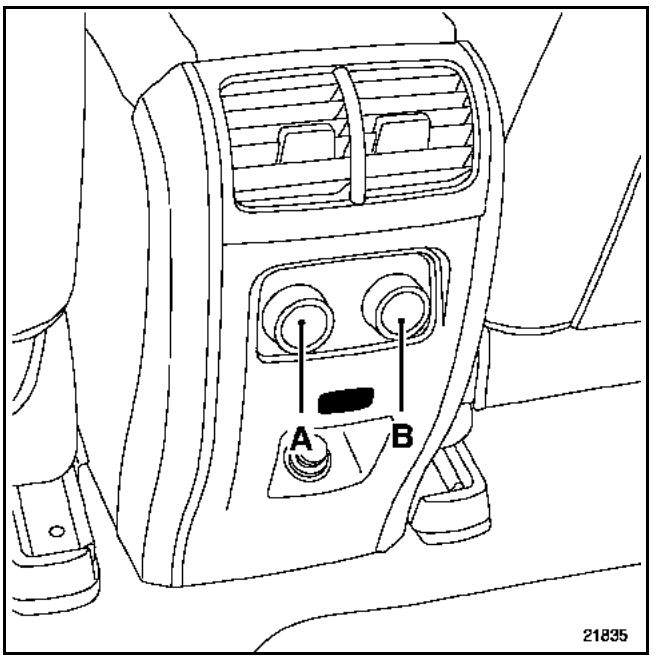

A Adjustment of the amount of air delivered to the passenger compartment
B Distribution of air in the passenger compartment

GETtheMANUALS.org

VEHICLE WITHOUT HEATED WINDSCREEN

REAR SCREEN DE-ICING/DEMISTING

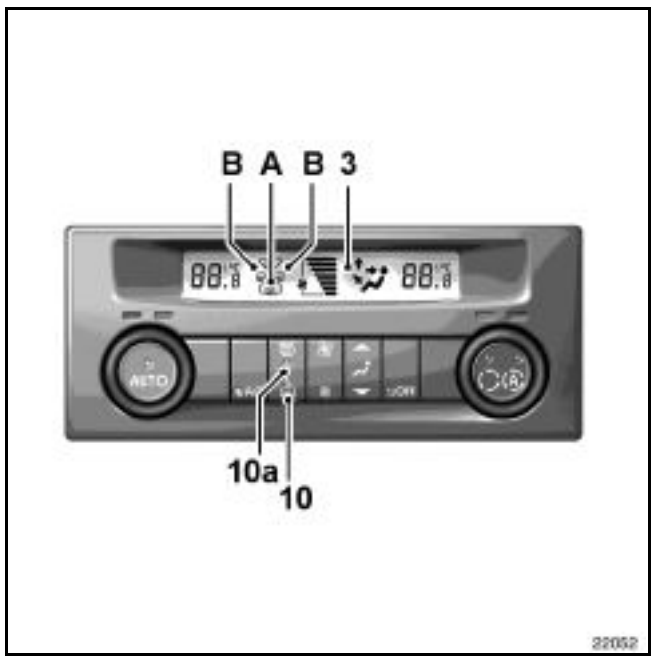

Press button (10), in operation indicator lamp (10a) comes on and indicator lights (A) and (B) appear on the display (3).

This function allows rapid electric demisting of the the rear screen and the de-icing electric rear-view mirror.

To exit this function:
– it switches off automatically after a time determined by the system,
– press again on button (10).

VEHICLE WITH HEATED WINDSCREEN

WINDSCREEN AND REAR SCREEN DE-ICING/ DEMISTING

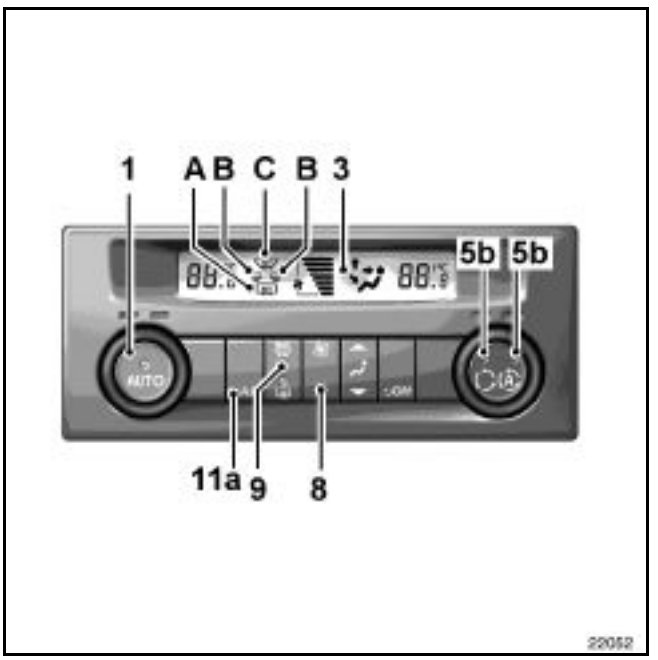

"SEE CLEAR" FUNCTION

Press button (9), the in operation indicator lamp comes on, and indicator lights (A), (B) and (C) appear on display (3).

The **Auto** button indicator light switches off: the air distribution operating mode is no longer automatic.

This function allows the windscreen, front side windows, rear-view mirrors and rear screen to demist and de-ice rapidly. To increase efficiency, it operates the air conditioning automatically (indicator light 11a on) and disables air recirculation (indicator lights 5a and 5b off).

To exit this function:
– it switches off automatically after a time determined by the system,
– press button (9) again.

GETtheMANUALS.org

AIR RECIRCULATION

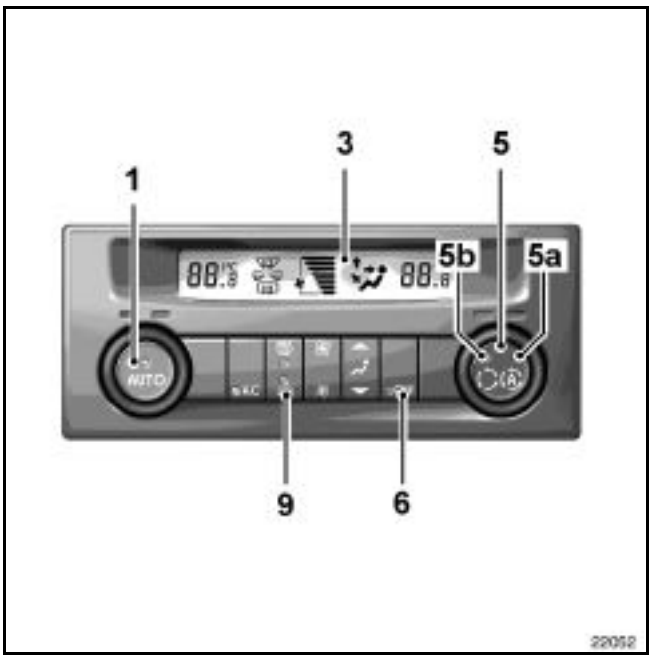

Air is taken from the passenger compartment and is recycled, with no outside air entering the vehicle.

In automatic mode, the system controls the going into recycling mode according to the exterior vehicle emissions (exhaust fumes).

Successive presses on button (5) obtain:
– automatic recycling (in operation indicator lamp 5a on),
– manual recycling (in operation indicator lamp 5b on),
– the external air (indicator lamps off).

Prolonged use of the air recirculation mode may cause the windows to mist up or lead to odours, as the air is not renewed.

You are therefore advised to return to normal mode (external air or automatic recirculation) as soon as air recycling is no longer required, by pressing button (5).

Stopping the system

Press button (6).

The in operation indicator lamp comes on. No signal is displayed on the display (3).

The installation has been switched off. This function isolates the passenger compartment from the external environment.

To exit this function, press button (1) or (9).

GETtheMANUALS.org

PERSONALISED AIR DISTRIBUTION OPERATION

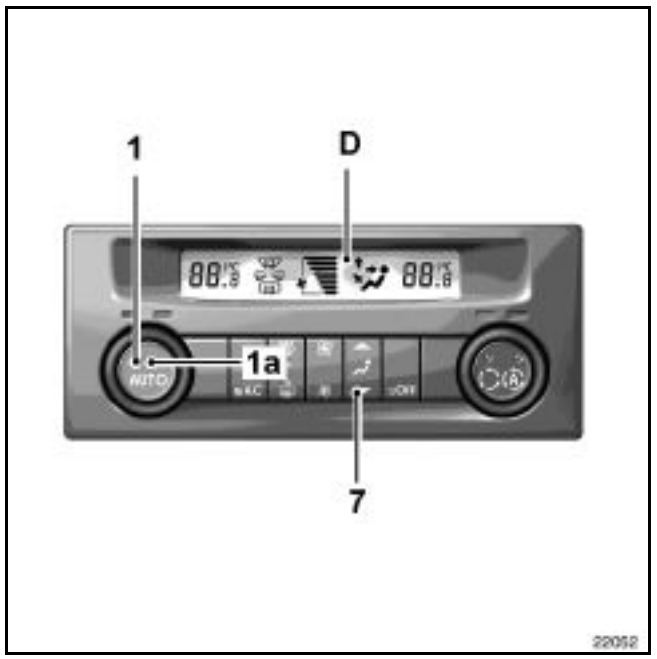

The normal operation of the system is automatic mode, but it is possible to modify the choice offered by the system (amount of air, distribution, etc).

Press button (7) to exit automatic mode (indicator light 1a switches off).

There are six possible air distribution options which are obtained by pressing button (7) successively.

The indicator arrows (D) display the option selected:
– the arrow pointing upwards represents air flow circulating from the windscreen demisting outlet,
– the arrow pointing downwards represents air flow circulating around the footwell,
– the horizontal arrow represents air flow circulating from the vents on the dashboard.

The manual air distribution option turns off automatic mode button in operation indicator lamp (1), but only air distribution is no longer controlled automatically by the system.

To return to automatic mode, press button (1).

GETtheMANUALS.org

Fitted in front of the external air intake, it filters the air and ensures the air is totally clean before being let into the passenger compartment.

REMOVAL

IMPORTANT: do not disconnect the CD rom reader until the system has shut down completely (approximately 45 seconds).

Open the glovebox.

Remove the navigation CD player on the versions concerned.

Disconnect the connections and remove the CD player.

Remove the glovebox bolts and connectors.

Remove the glovebox.

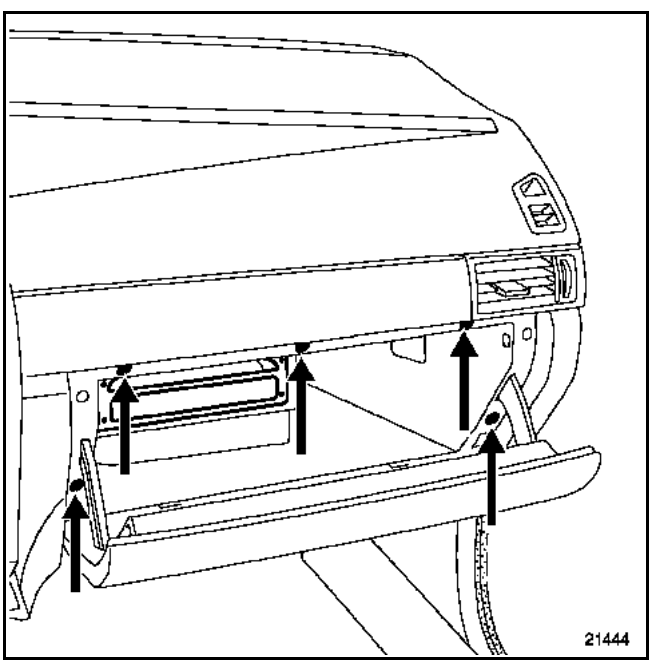

Remove the two passenger compartment filter cover bolts (1).

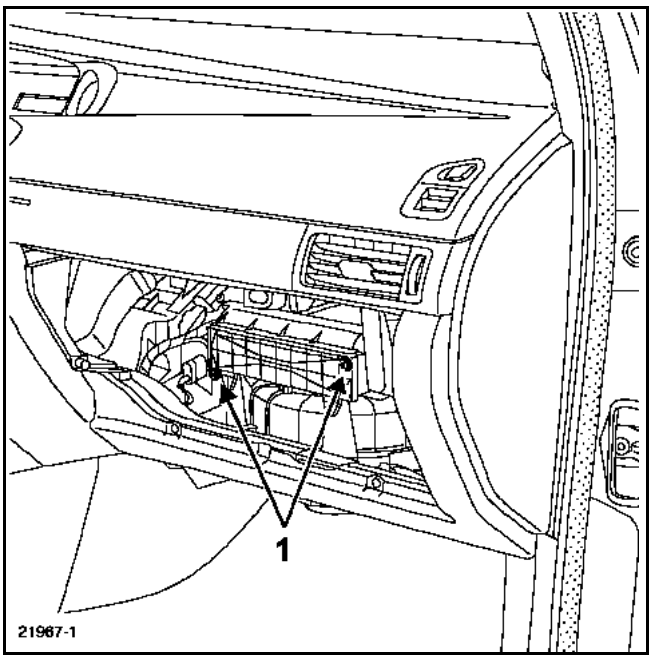

Remove the passenger compartment filter.

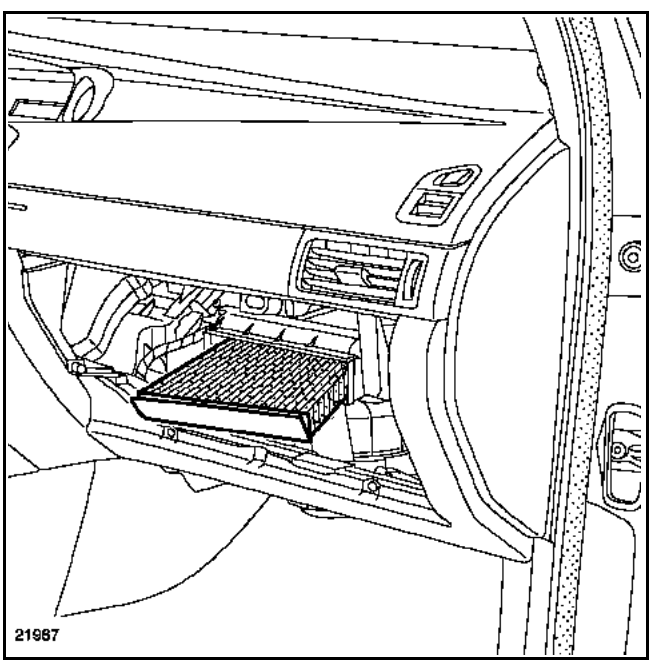

REFITTING

Carry out the removal procedure in reverse.

NOTE: to initialise the system, refer to the "**Initialisation**" section.

GETtheMANUALS.org

Fitted in front of the external air intake, it filters the air and ensures the air is totally clean before being let into the passenger compartment.

REMOVAL

IMPORTANT: do not disconnect the CD rom reader until the system has shut down completely (approximately 45 seconds).

Open the glovebox.

Remove the navigation CD player on the versions concerned.

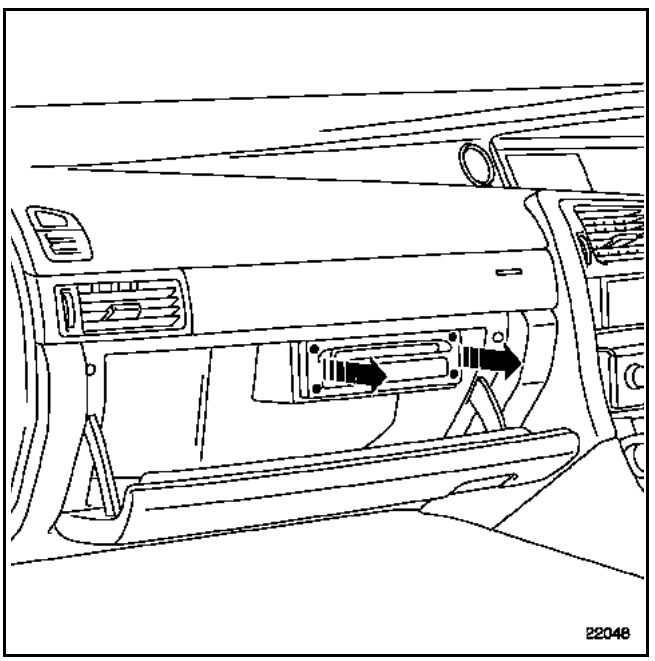

Disconnect the connections and remove the CD player.

Remove the glovebox bolts and connectors.

Remove the glovebox.

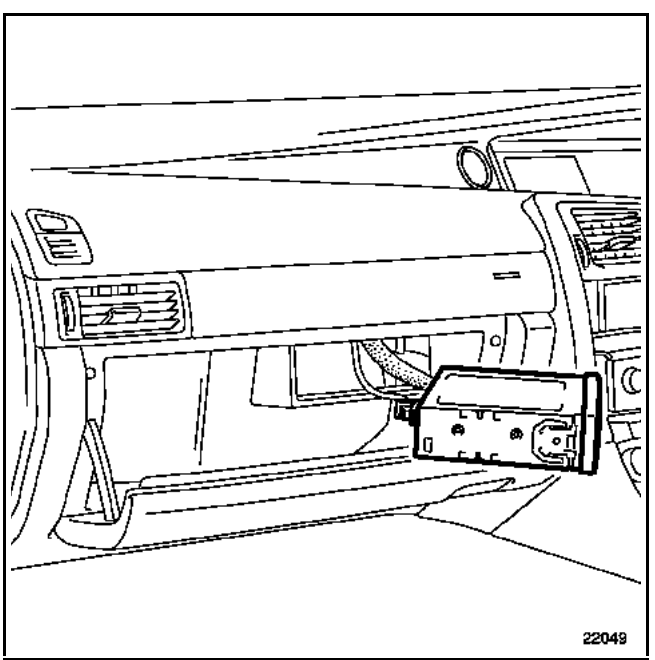

Remove the two passenger compartment filter cover bolts (1).

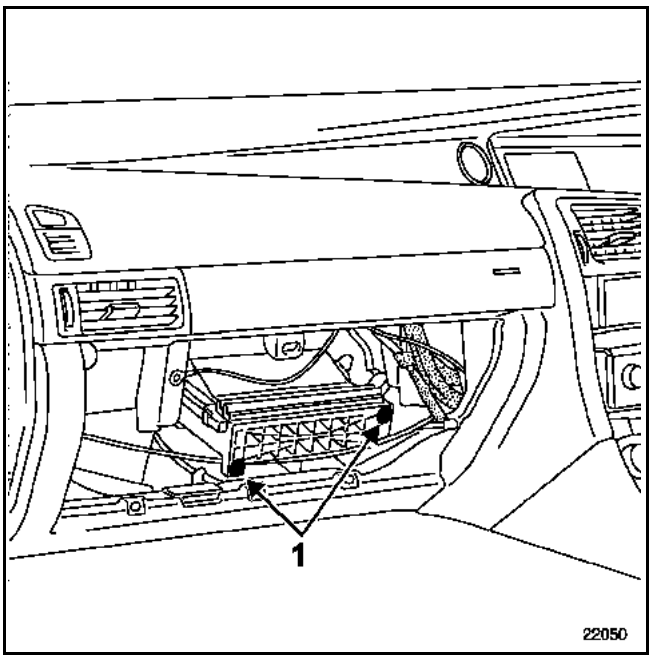

Remove the passenger compartment filter.

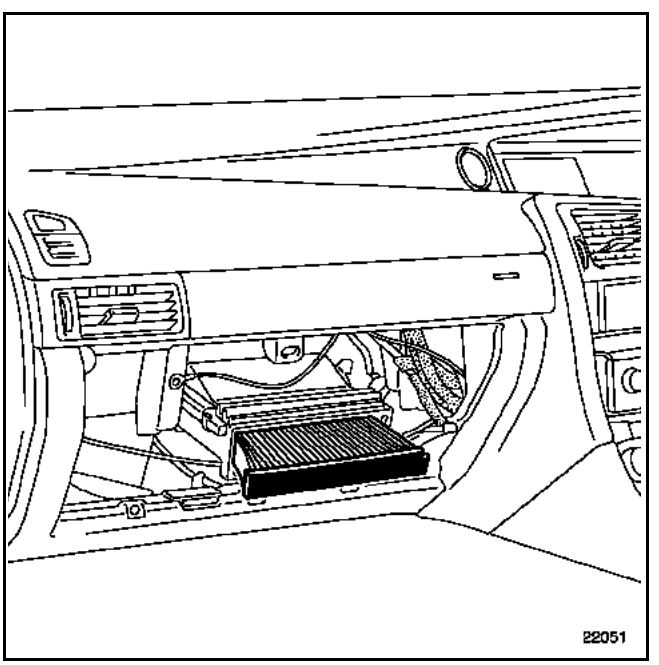

REFITTING

Carry out the removal procedure in reverse.

NOTE: to initialise the system, refer to the "**Initialisation**" section.

GETtheMANUALS.org

REMOVAL

Disconnect the battery.

Unclip the rear section of the rear lining by pulling (1) then (2).

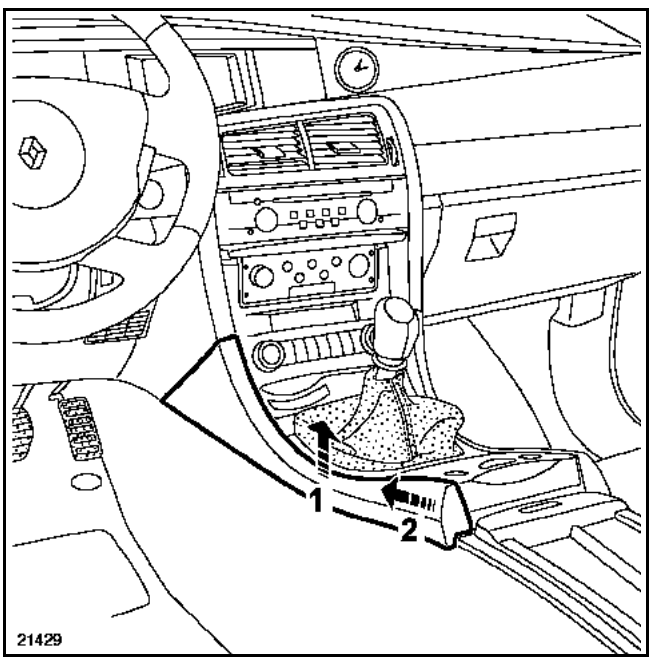

Unclip:
– the front section lining at (3) then at (4),

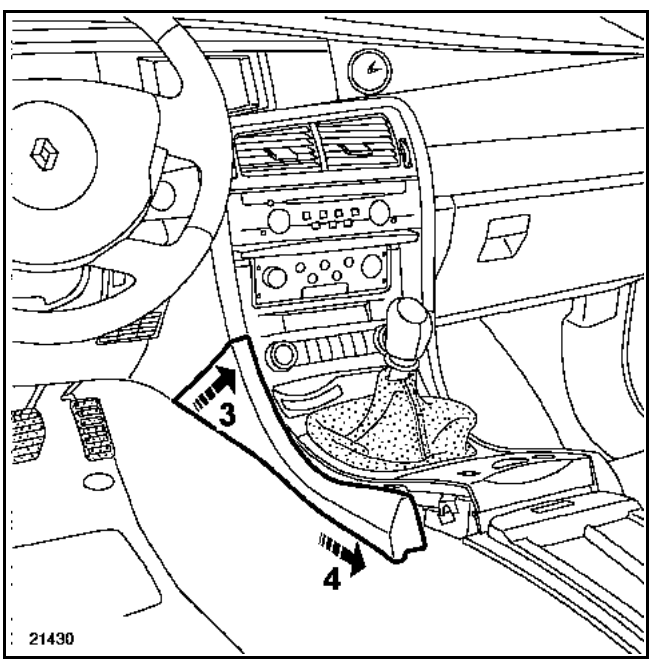

– the gear selector lever connecting line.

Using a flat screwdriver unclip the front and rear sections of the ashtray support (5).

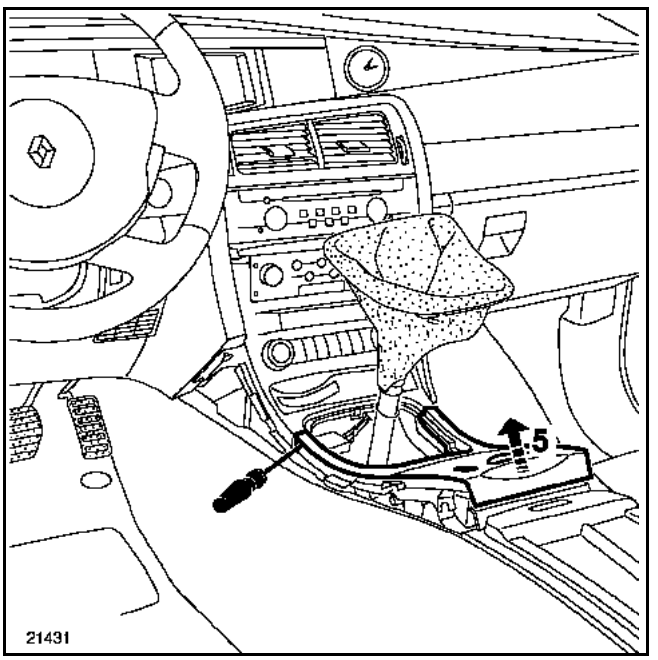

Unclip the card reader mounting from the upper and lower sections.

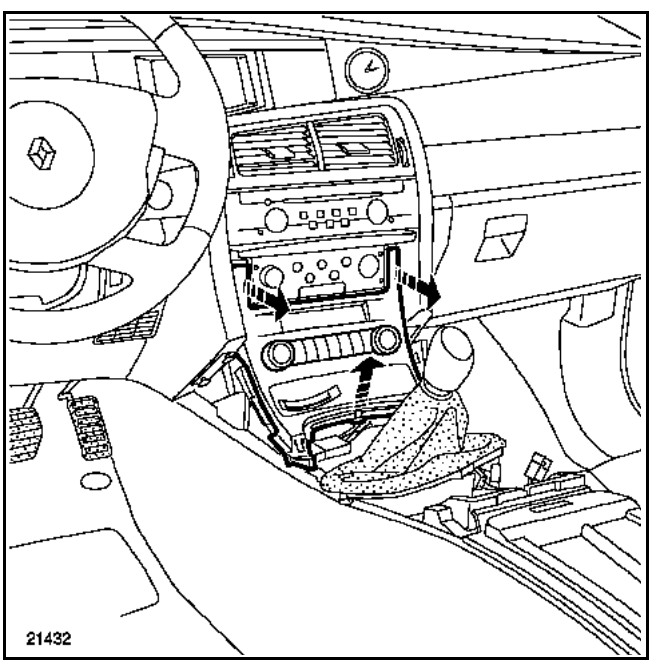

GETtheMANUALS.org

SPECIAL NOTES ON THE AUTOMATIC GEAR LEVER

REMOVAL

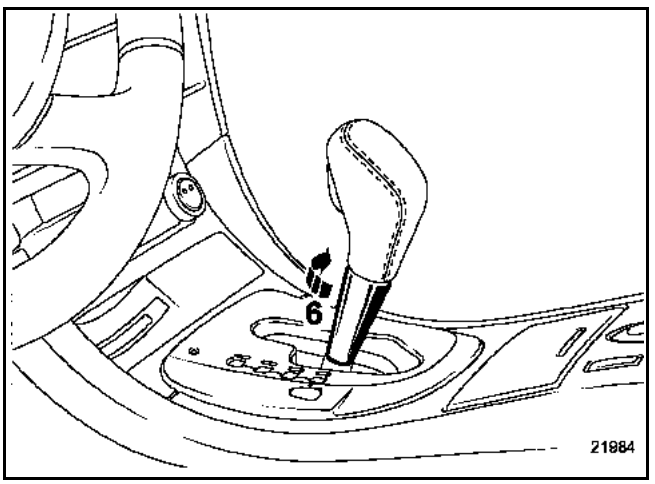

Rotate lower section (6).

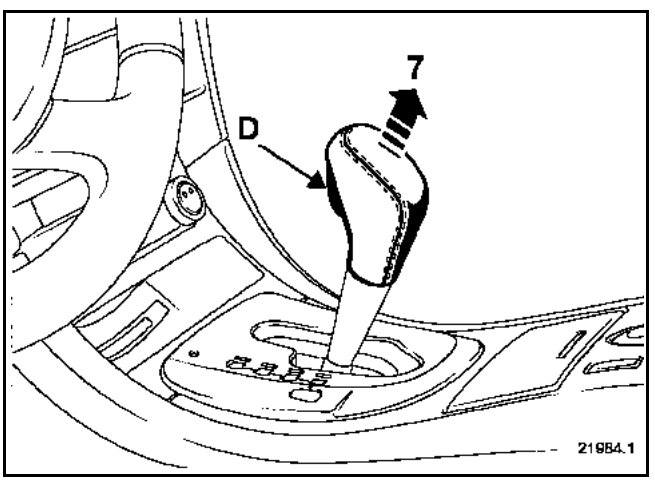

Press command unlocking button (D); pull out lever (7).

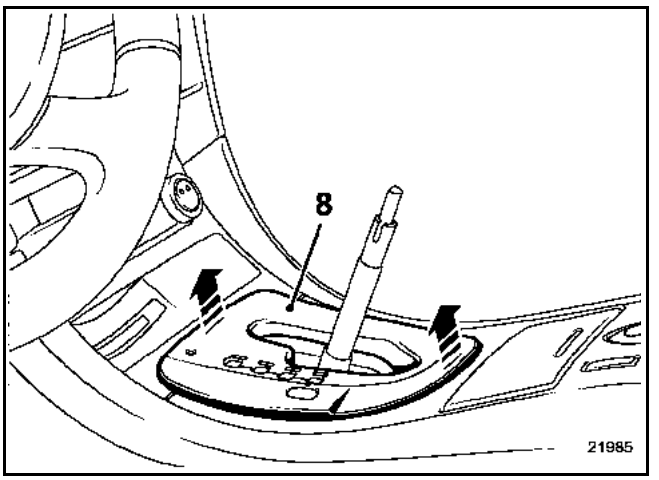

Unclip gear lever plate (8).

REFITTING

Clip on the gear lever plate.

Assemble the two gear lever sections: clip together.

GETtheMANUALS.org

Remove the card reader/control panel mounting in order to disconnect connectors (A), (B) and (C) from the air conditioning control panel and the card reader.

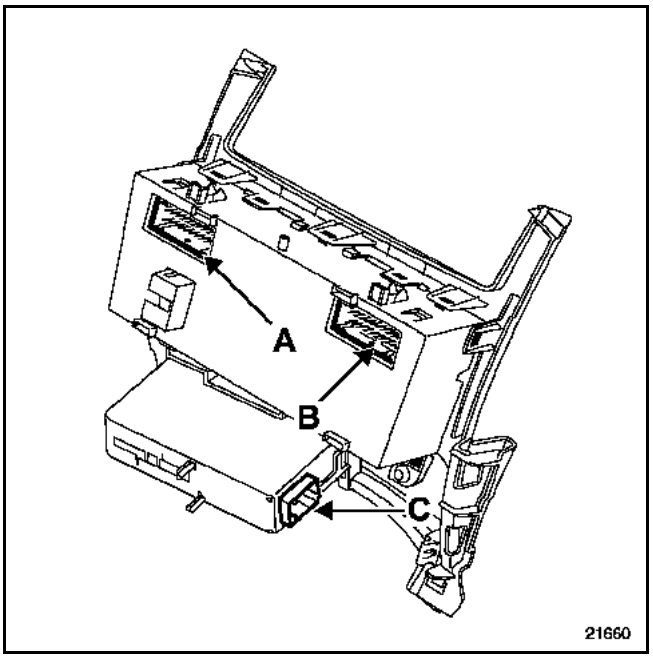

Unclip the control panel from its mounting.

REFITTING

Carry out the removal procedure in reverse.

NOTE: reinitialise after connecting the battery.

IMPORTANT: do not forget to carry out the programming needed for the vehicle to operate correctly after connecting the battery (refer to **section 80A**).

GETtheMANUALS.org

REMOVAL

Unclip the cigarette lighter mounting.

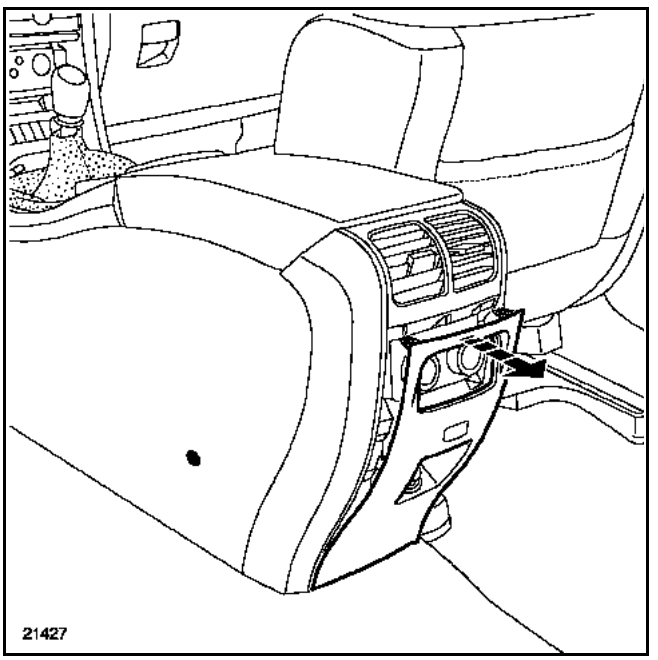

Remove the centralised door locking switch connections and the cigarette lighter.

Unclip and remove the heater control.

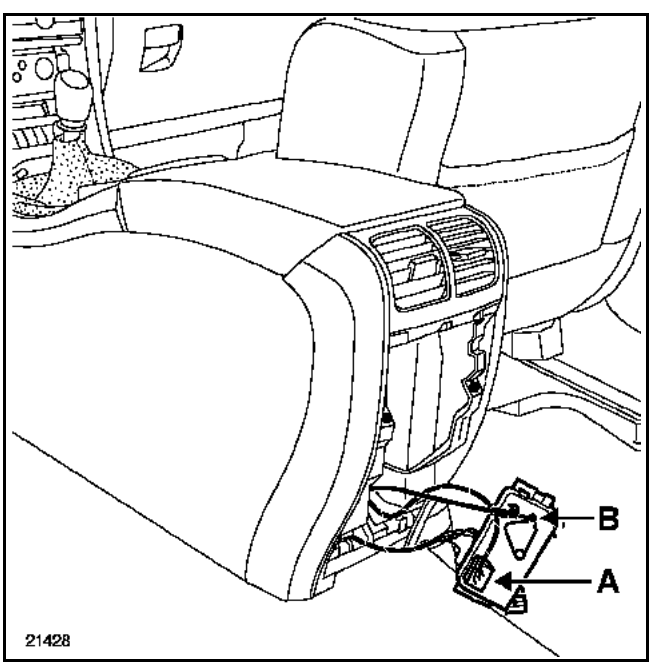

Disconnect connector (A) and remove control cable (B).

REFITTING

Carry out the removal procedure in reverse.

GETtheMANUALS.org

REMOVAL

Unclip the cigarette lighter mounting.

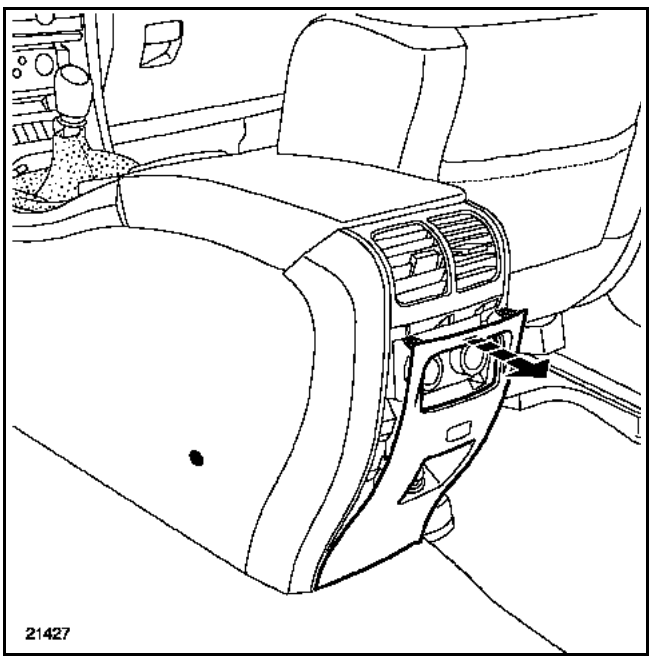

Remove the centralised door locking switch connections and the cigarette lighter.

Unclip and remove the heater control.

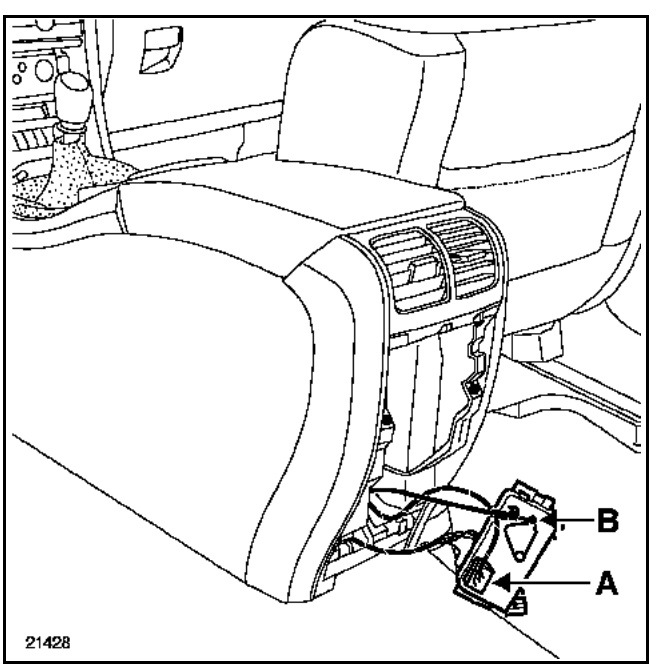

Disconnect connector (A) and remove control cable (B).

GETtheMANUALS.org

Remove:
– the centre console (see **section 57A: "Centre console"**),
– control cable (C).

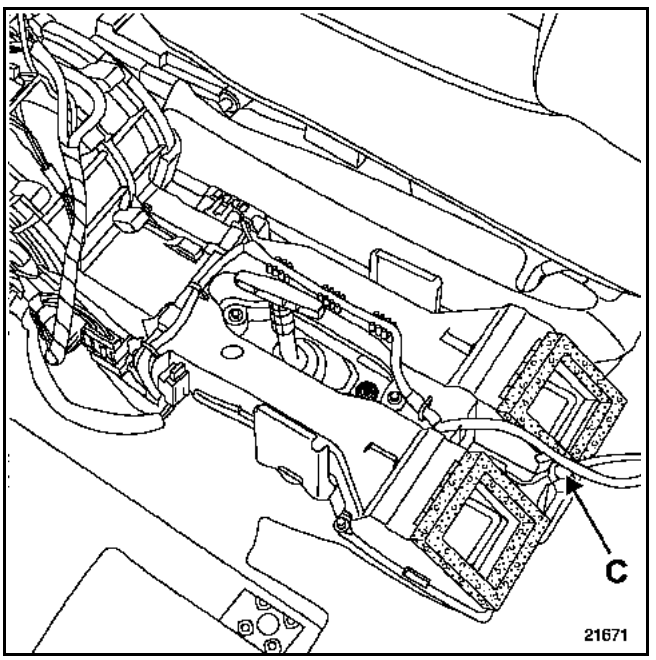

REFITTING

Carry out the removal procedure in reverse.

GETtheMANUALS.org

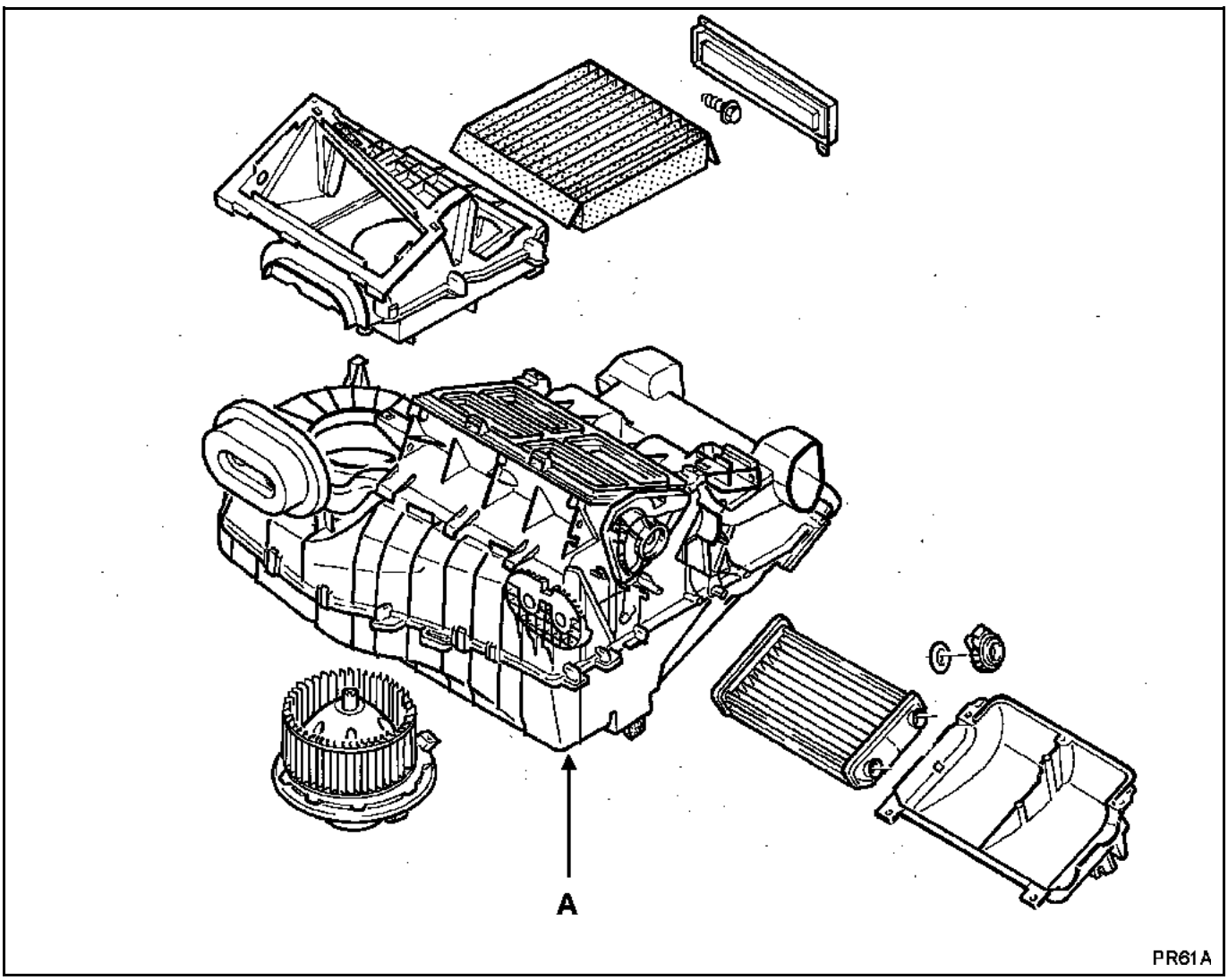

REMOVAL - REFITTING

The air distribution unit (A) can be accessed after removing the dashboard and the passenger compartment reinforcement beam.

Follow the remove and refit instructions in **section 62: "Removal and refitting the evaporator unit"**.

IMPORTANT: before reconnecting the air bag cushion, it is necessary to apply the procedure for checking the correct operation of the system:

- Check that the air bag warning light on the instrument panel lights up when the ignition is switched on (computer unlocked). Connect a dummy ignition module to the connector for each air bag cushion and check that the warning light goes out.
- Switch off engine, connect the air bag cushion in place of the dummy ignition module and fix the air bag to the steering wheel.
- Switch on the ignition, check that the air bag warning light lights up for 3 seconds when the ignition is switched on and then goes out and remains out.
- Refer to **section 88** if the light fails to operate in this way.

GETtheMANUALS.org

ADJUSTMENT AND DISTRIBUTION OF THE HEATING OUTPUT

There are two ways of varying the heating output:
– air flow,
– the air temperature.

The air temperature is adjusted using the various settings of the mixing flaps. In the air distribution unit, the air is diverted depending on the position of the mixing flaps, passes through to the heater radiator and is then mixed with cold air to obtain the air temperature requested by the user.

Air is supplied and distributed to the passenger compartment through:
– a five-mode air distributor,
– four front air vents, two rear air vents,
– two front footwell ducts,
– two rear footwell ducts,
– a windscreen demisting/de-icing vent,
– two front side window demisting/de-icing vents.

GETtheMANUALS.org

REMOVAL

Put the car on a two post lift.

Disconnect the battery.

Remove the engine undertray.

Drain the cooling circuit.

Passenger compartment side

The radiator can be removed without removing the dashboard.

Remove:
– the two left and right side covers,

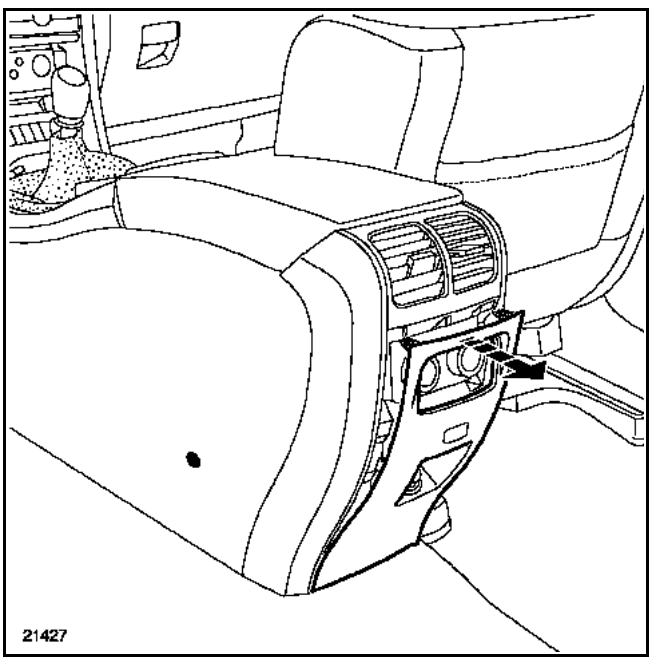

– the centre console (see **section 57A: "Centre console"**),
– the central fan assembly (see **Rear fan assembly section**),

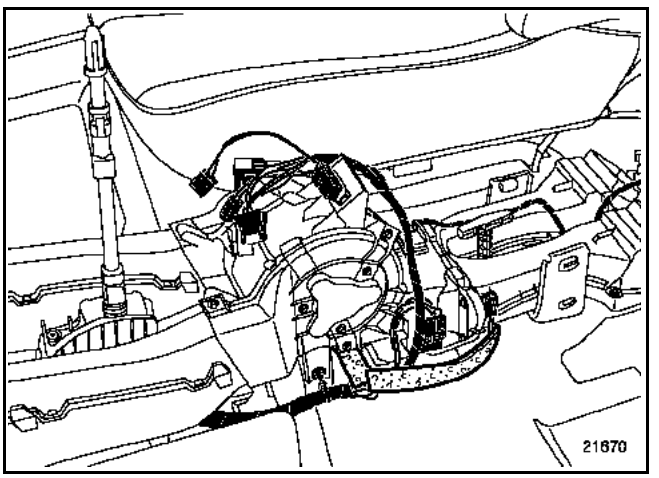

– the four retaining bolts of the beam reinforcement doubler panel,
– beam reinforcement doubler panel (C).

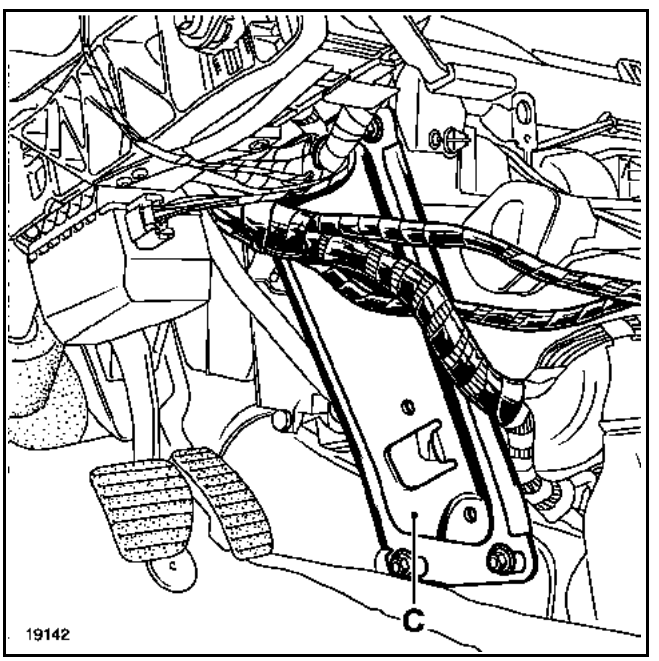

GETtheMANUALS.org

Remove:
– the radiator sump by pulling it towards you (five bolts),

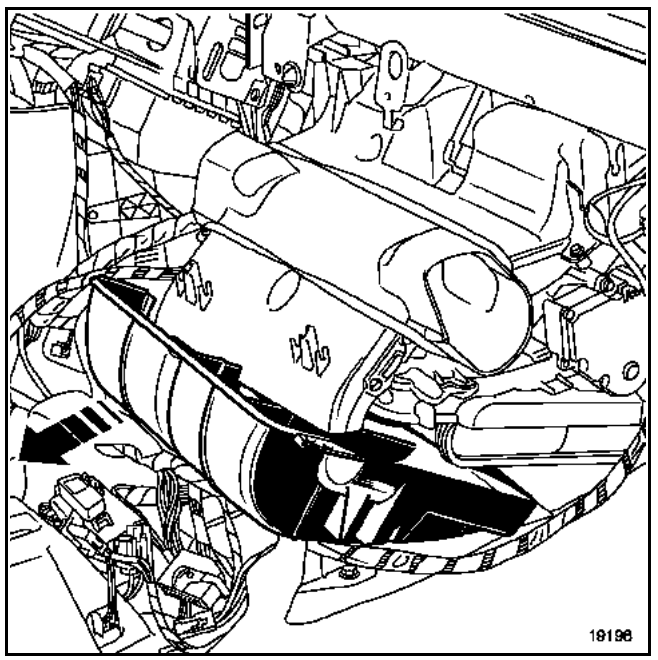

– the two clips of the radiator coolant circuit pipes using a screwdriver,

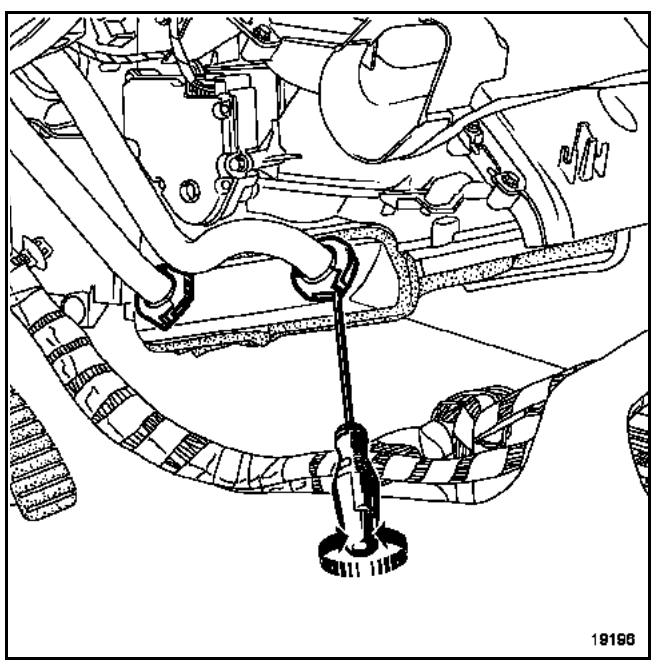

– the radiator.

REFITTING

The radiator is refitted in the reverse order to removal.

IMPORTANT: it is essential to refit the electric wiring harness correctly to avoid the risk of contact with the radiator (heat source).

IMPORTANT: do not forget to carry out the programming needed for the vehicle to operate correctly after connecting the battery (refer to **section 80A**).

GETtheMANUALS.org

REMOVAL

Put the car on a two post lift.

Disconnect the battery.

Remove the engine undertray.

Drain the cooling circuit.

Passenger compartment side

The dashboard does not need to be removed before removing the radiator.

Remove:
– the two left and right side covers,

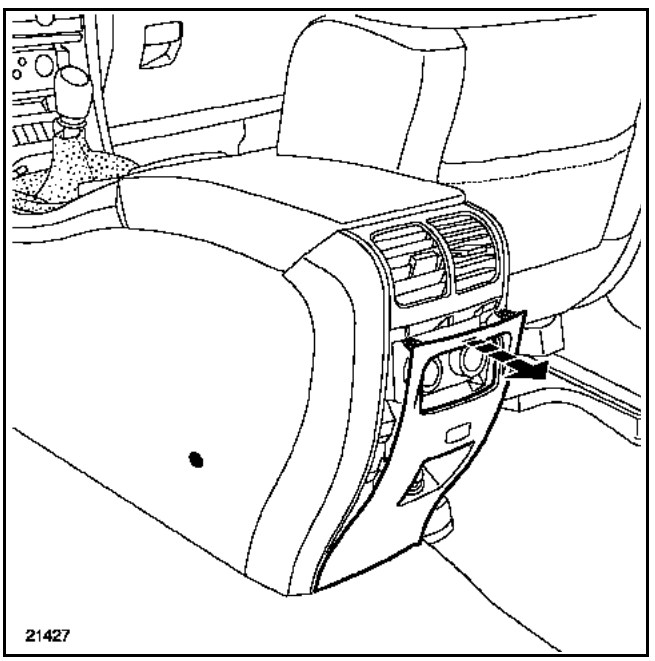

– the centre console (see **section 57A: "Centre console"**),
– the central fan assembly (bolts A and B) (see **"Rear fan assembly" section**),

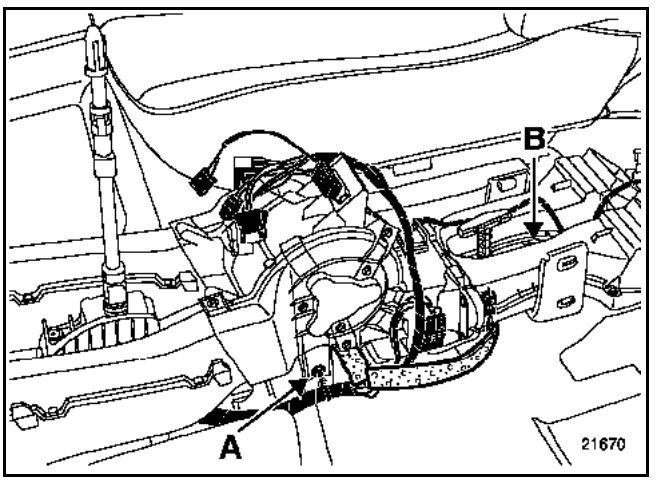

– the four retaining bolts of the beam reinforcement doubler panel (C),
– the beam reinforcement doubler panel.

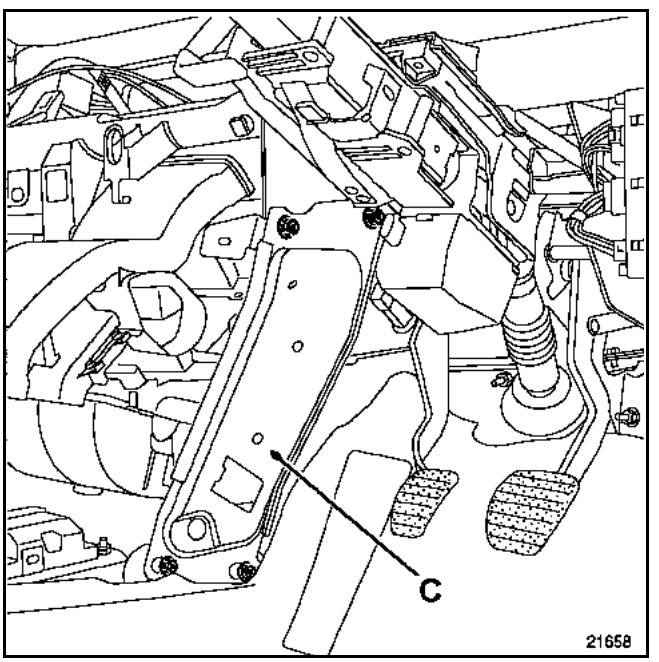

GETtheMANUALS.org

Remove:
– the radiator sump by pulling it towards you (five bolts),

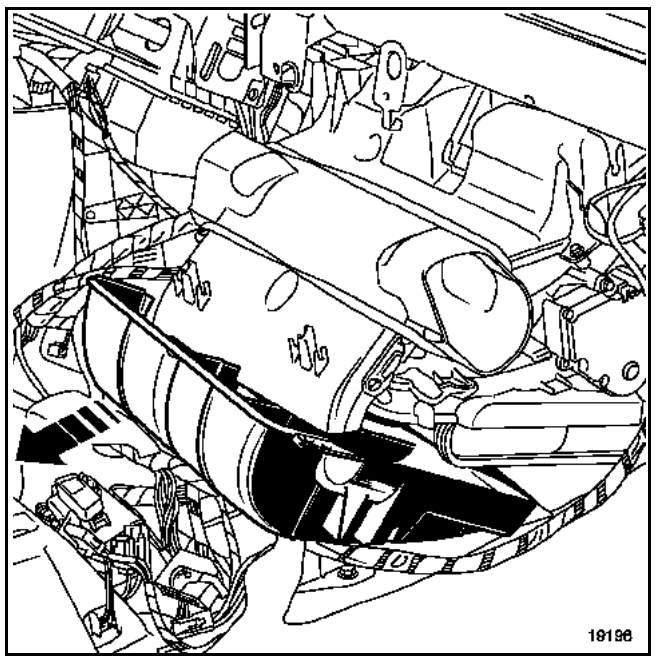

– the two clips of the radiator coolant circuit pipes using a screwdriver,

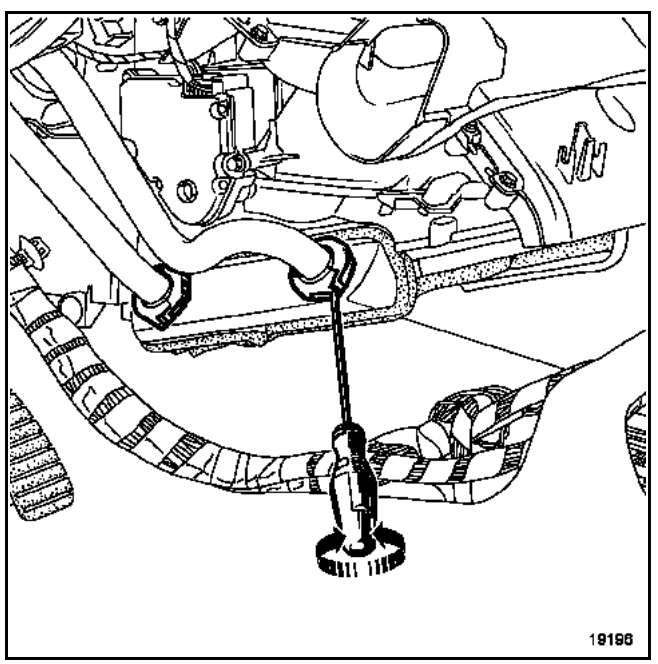

– the radiator.

REFITTING

The radiator is refitted in the reverse order to removal.

IMPORTANT: it is essential to refit the electric wiring harness correctly to avoid the risk of contact with the radiator (heat source).

IMPORTANT: do not forget to carry out the programming needed for the vehicle to operate correctly after connecting the battery (refer to **section 80A**).

GETtheMANUALS.org

REMOVAL

The engine cooling fan can be accessed from underneath the dashboard.

Disconnect:
– the battery,
– engine cooling fan connector (A).

Remove engine cooling fan mounting bolt (B).

Rotate the engine cooling fan in a clockwise direction to unclip the unit and remove it from underneath.

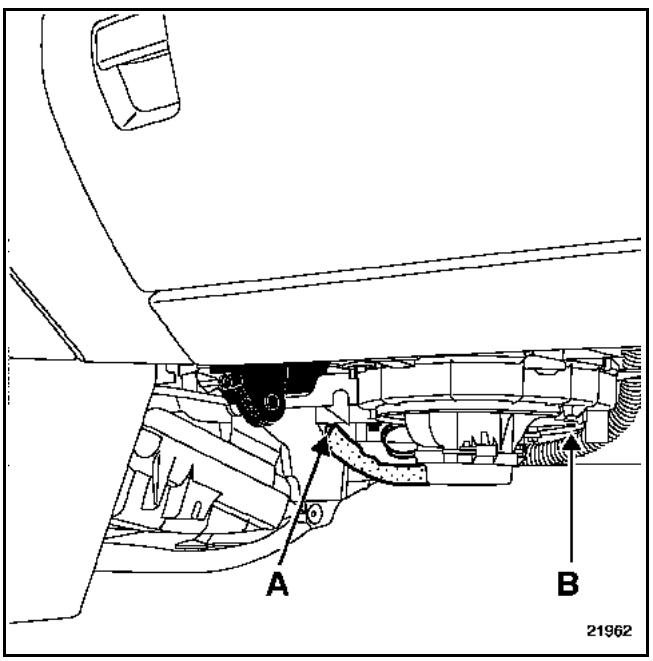

NOTE: when removing the fan assembly, press against the carpet with both feet to avoid damaging the fan assembly blades.

REFITTING

Carry out the removal procedure in reverse.

IMPORTANT: do not forget to carry out the programming needed for the vehicle to operate correctly after connecting the battery (refer to **section 80A**).

GETtheMANUALS.org

REMOVAL

The engine colling fan can be accessed from underneath the dashboard.

Disconnect:
– the battery,
– engine cooling fan connector (A).

Remove connector mounting (B).

Disconnect the connections (C).

Remove engine cooling fan mounting bolt (D).

Rotate the engine cooling fan in a clockwise direction to unclip the unit and remove it from underneath.

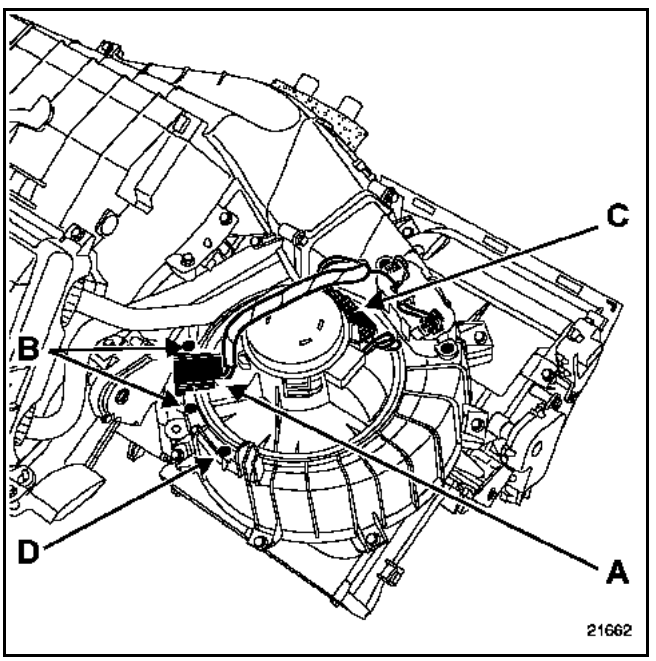

NOTE: when removing the fan assembly, press against the carpet with both feet to avoid damaging the fan assembly blades.

REFITTING

Carry out the removal procedure in reverse.

IMPORTANT: do not forget to carry out the programming needed for the vehicle to operate correctly after connecting the battery (refer to **Section 80A**).

GETtheMANUALS.org

REMOVAL

The engine cooling fan can be accessed after removing the centre console.

Disconnect the battery.

Remove:
– the two left and right side covers,

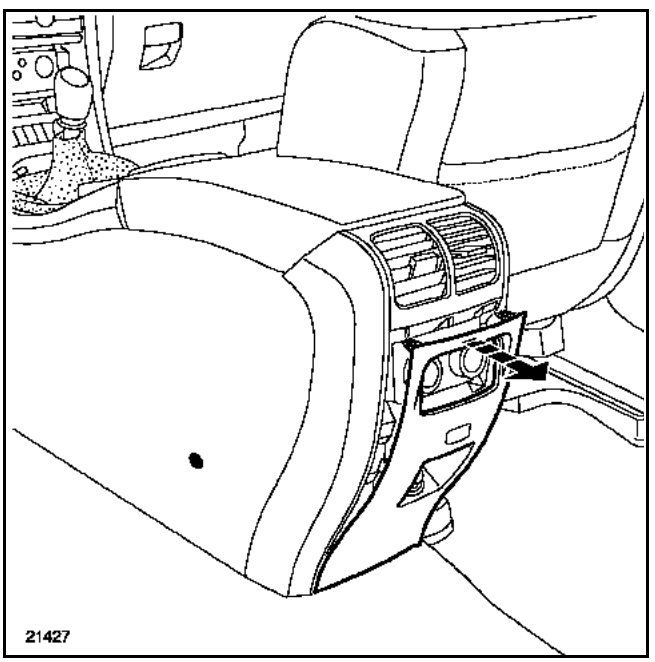

– the centre console (see **section 57A: "Centre console"**),

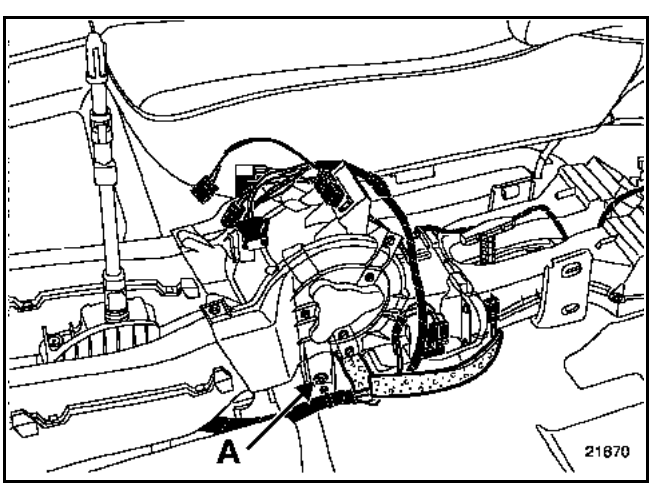

– assembly side retaining bolt (A),

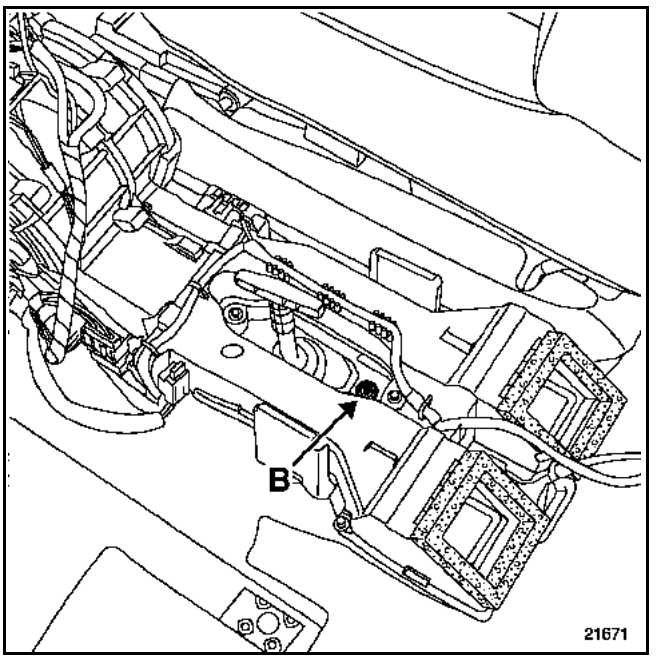

– assembly retaining bolt (B),
– the electric wiring harness assembly.

Withdraw the unit.

GETtheMANUALS.org

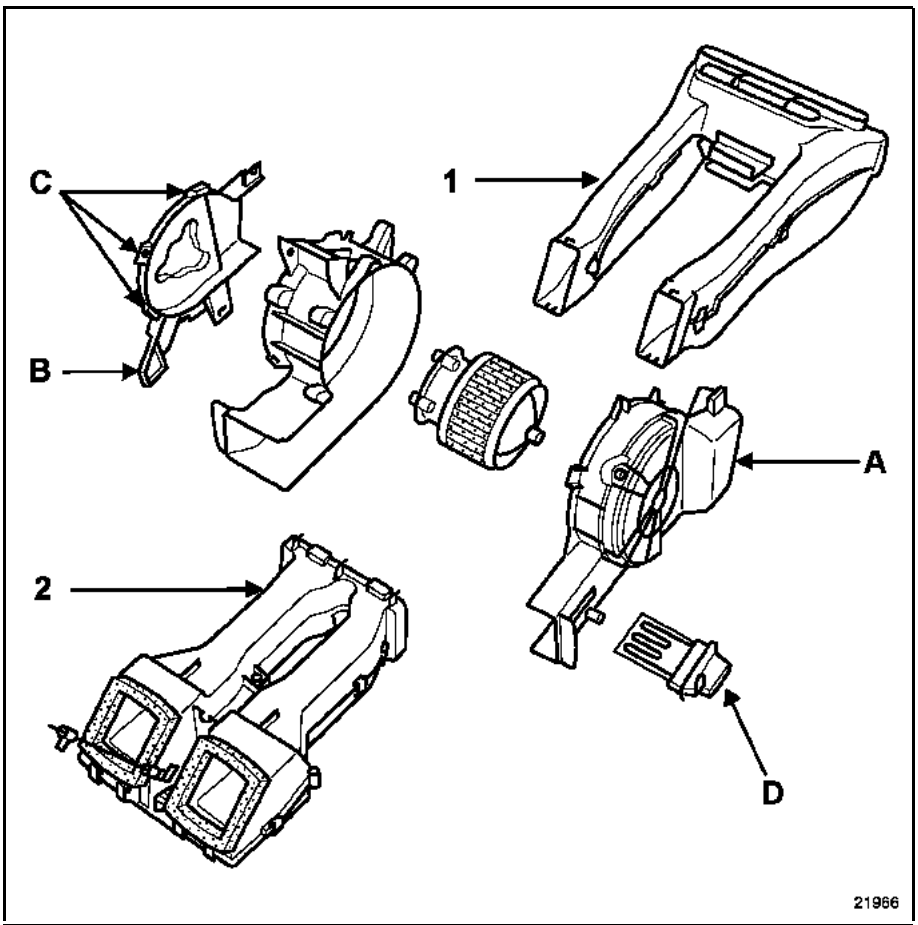

Remove:
– front section of the fan assembly (1),
– rear section of the fan assembly (2),
– cover (A),
– cover (B),
– the three engine retaining bolts (C),
– the two engine terminals,
– the electronic speed variation module (D).

Remove the engine.

REFITTING

Carry out the removal procedure in reverse.

IMPORTANT: do not forget to carry out the programming needed for the vehicle to operate correctly after connecting the battery (refer to **section 80A**).

GETtheMANUALS.org

ELECTRONIC SPEED VARIATION MODULE

Disconnect the battery.

The electronic speed variation module is accessible from under the dashboard.

Disconnect the battery.

Remove:
– the two resistor unit mounting bolts (A),
– the two resistor unit connectors (B).

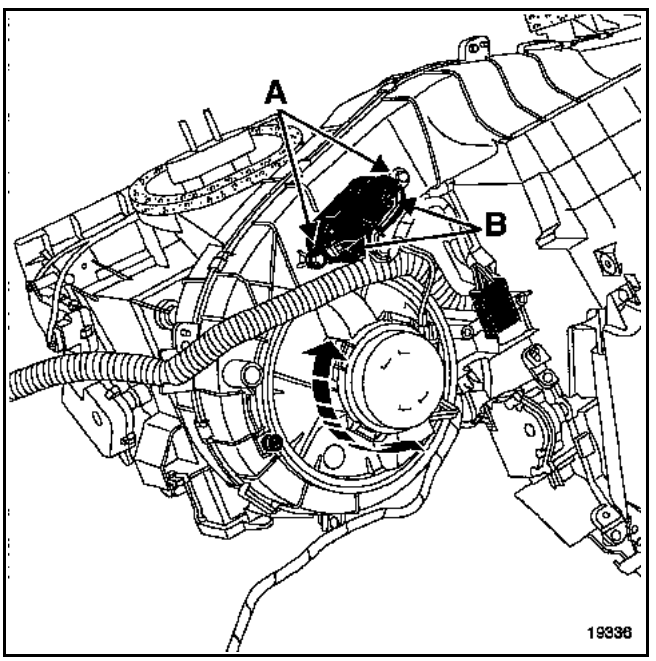

REFITTING

Carry out the removal procedure in reverse.

NOTE: do not forget to refit the clutch sensor on its mounting.

IMPORTANT: do not forget to carry out the programming needed for the vehicle to operate correctly after connecting the battery (refer to **section 80A**).

GETtheMANUALS.org

ELECTRONIC SPEED VARIATION MODULE

Disconnect the battery.

The electronic speed variation module is accessible from under the dashboard.

Disconnect the battery.

Remove:
– the braking sensor by turning it a quarter of a turn,
– the two electronic speed variation module mounting (A) bolts,
– the two electronic speed variation module connectors (B).

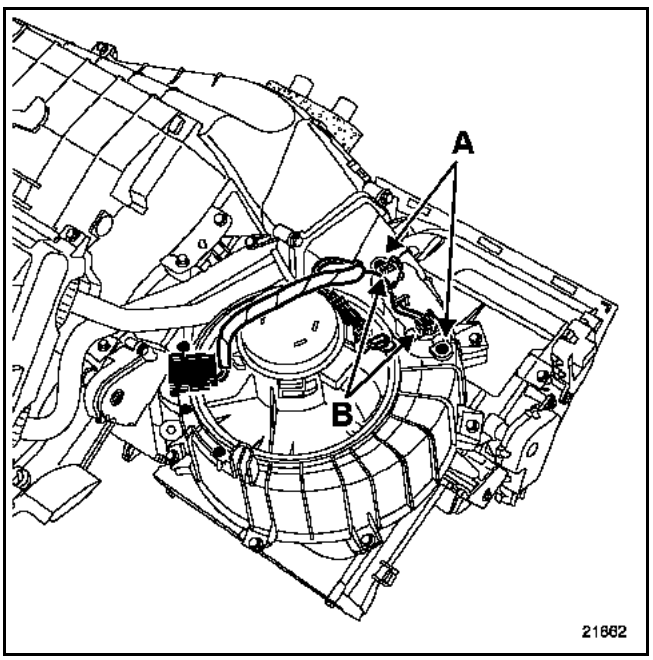

REFITTING

Carry out the removal procedure in reverse.

NOTE: do not forget to refit the braking sensor on its mounting.

IMPORTANT: do not forget to carry out the programming needed for the vehicle to operate correctly after connecting the battery (refer to **Section 80A**).

GETtheMANUALS.org

REMOVAL

The engine cooling fan can be accessed after removing the centre console.

Disconnect:
– the battery.

Remove:
– the two left and right side covers,

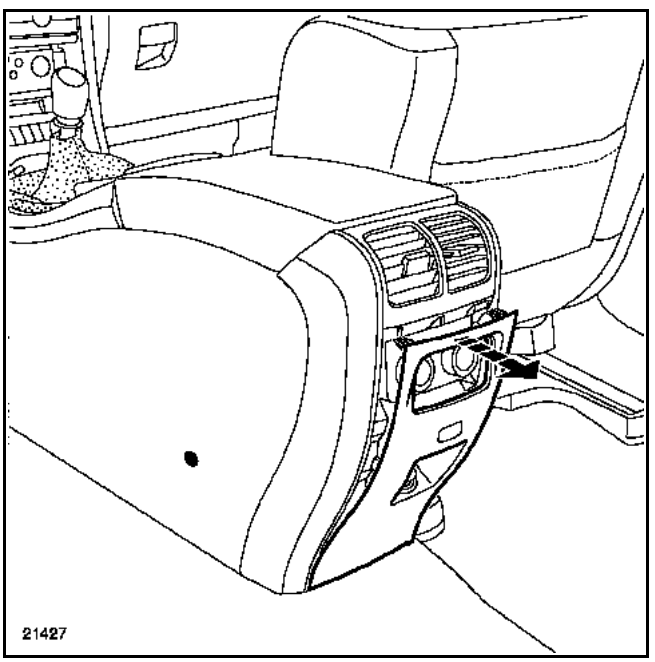

– the centre console (see **section 57A "Centre console"**).

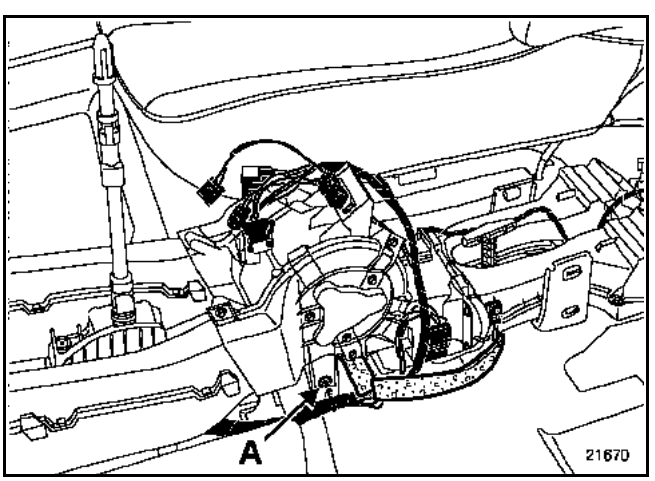

NOTE: it is not necessary to remove the fan assembly to remove the resistor unit.

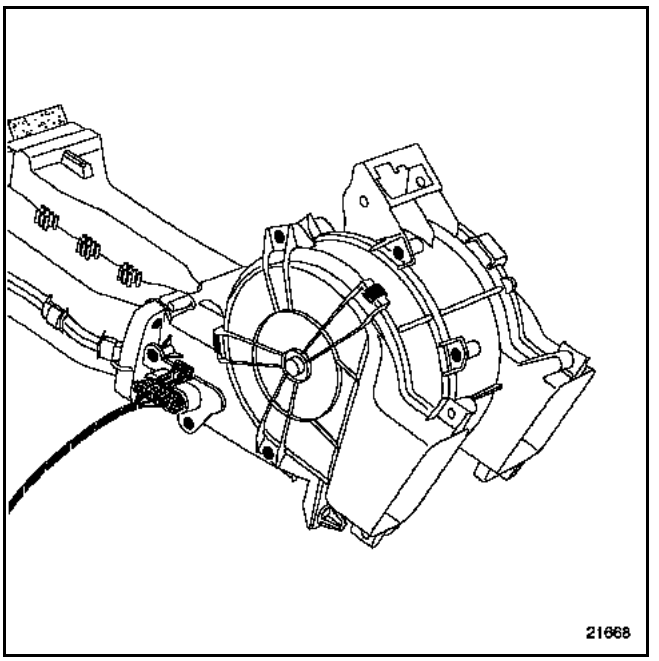

Recline the front right-hand seat.

Remove:
– the resistor unit connections (A),
– the module bolt (B) to extract it.

REFITTING

Carry out the removal procedure in reverse.

IMPORTANT: do not forget to carry out the programming needed for the vehicle to operate correctly after connecting the battery (refer to **section 80A**).

GETtheMANUALS.org

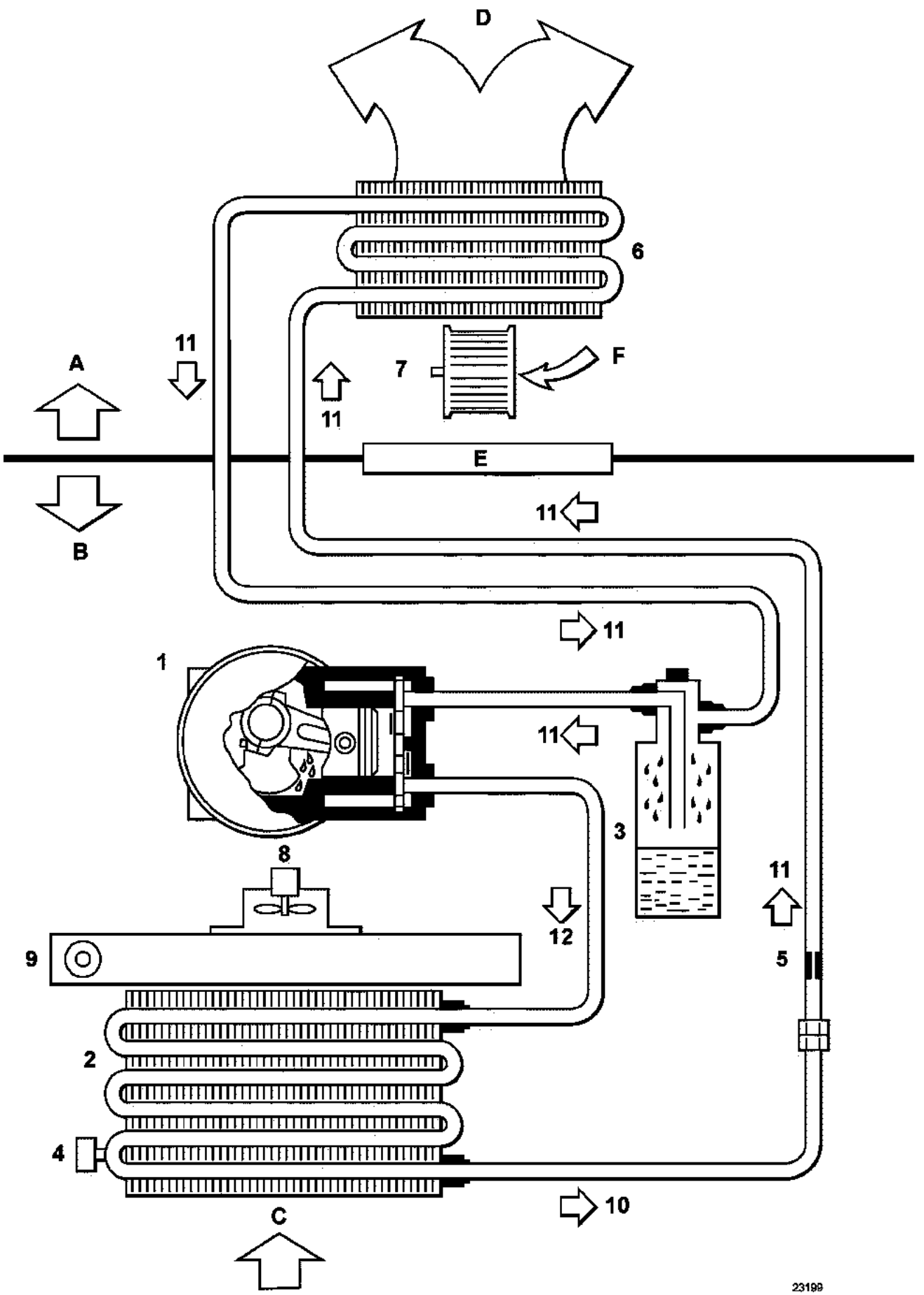

GETtheMANUALS.org

A Passenger compartment
B Engine compartment
C External air
D To air mixing unit
E Bulkhead
F External or recirculated air

1 Compressor
2 Condenser
3 Rechargeable battery
4 Pressure sensor
5 Calibrated opening
6 Evaporator
7 Air conditioning blower
8 Engine cooling fan
9 Engine radiator
10 High pressure fluid
11 Low pressure vapour
12 High pressure vapour

GETtheMANUALS.org

INFORMATION ON THE FLUID

A label in the engine compartment shows the technical specifications of the refrigerant.

More detailed information about this fluid is contained in the "**Air conditioning - new R134a refrigerant**" section.

USING A FILLING STATION

The special feature of the "Vel Satis" vehicle is that it only has one union for the whole air conditioning circuit.

For retrieval, vacuum creation and refilling the **R134a** gas, use only the high pressure hose at the filling station (**example for Robinair R134a**).

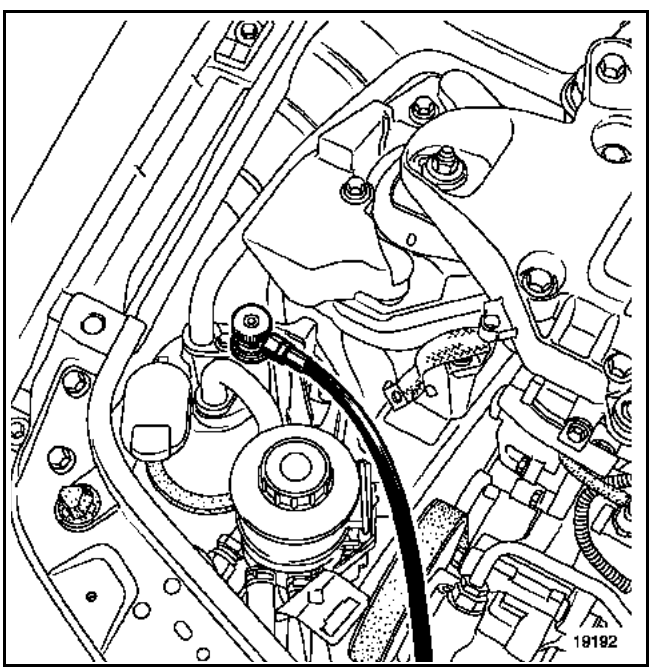

For all other filling stations, follow the instructions and contact the equipment supplier.

NOTE:
When removing a component, seal the openings to prevent moisture entering the circuit.

The caps on spare parts must be removed at the last moment for the same reason.

Perform a leak test with the engine running and air conditioning and blower at maximum, and check with a leak detector within five minutes after the filling operation.

Strictly follow the instructions about oil top-ups when working on air-conditioning circuit components.

GETtheMANUALS.org

Turbocharged F4R engine

– Compressor:
DELPHI HARRISON V5E

– Oil for **DELPHI HARRISON** compressor:
Oil capacity 265 cm^3.
For topping up, use PLANETELF PAG 488 oil.

– Refrigerant:
R134a: 650 g ± 35

G9T engine

– Compressor:
DELPHI HARRISON V5E

– Oil for **DELPHI HARRISON** compressor:
Oil capacity 265 cm^3.
For topping up, use PLANETELF PAG 488 oil.

– Refrigerant:
R134a: 650 g ± 35

V4Y engine

– Compressor:
CALSONIC KANSEI V6

– Oil for **CALSONIC KANSEI** compressor:
Oil capacity 220 cm^3.
For topping up, use PLANETELF PAG 488 oil.

– Refrigerant:
R134a: 650 g ± 35

P9X engine

– Compressor:
DENSO 7SBU16

– Compressor oil **DENSO**:
Oil capacity 245 cm^3.
For topping up, use ND OIL 8 oil.

– Refrigerant:
R134a: 650 g ± 35

GETtheMANUALS.org

CONTROL PANEL

The aim of automatic control is to provide users with a stable constant and effective heating regardless of external conditions and the conditions under which the vehicle is being used.

In addition, it ensures good visibility through the vehicle's windows.

This automatic control is managed electronically by a computer integrated into the control panel.

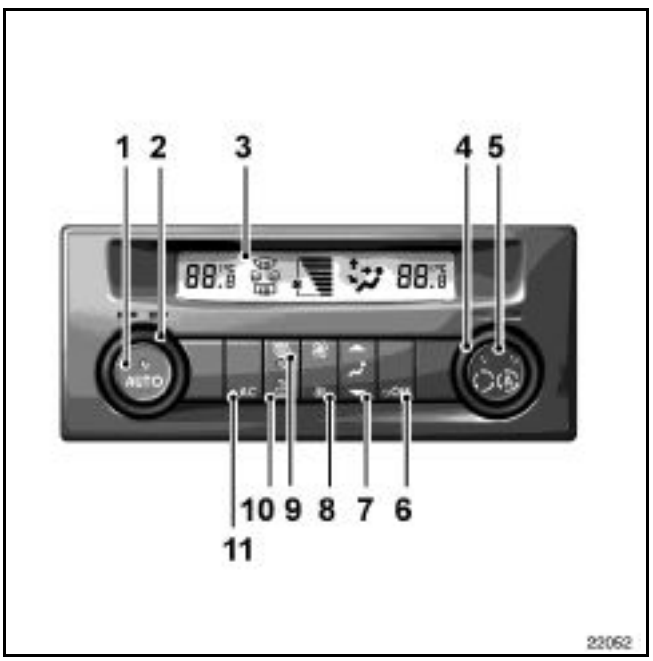

1 Automatic mode operation key
2 Left-hand side temperature adjustment button
3 Display
4 Right-hand side temperature adjustment button
5 Air recycling and automatic recycling start key
6 System OFF button
7 Air distribution adjustment key
8 Ventilation speed adjustment key
9 "See Clear" button to de-mist and de-ice the windows
10 Rear screen de-icing button
11 Air conditioning key

GETtheMANUALS.org

Fitted in front of the external air intake, it filters the air and ensures the air is totally clean before being let into the passenger compartment.

REMOVAL

Open the glovebox.

Remove the navigation CD player on the versions concerned.

Undo the connections and remove them from the CD player.

Remove the glovebox bolts and connectors.

Remove the glovebox.

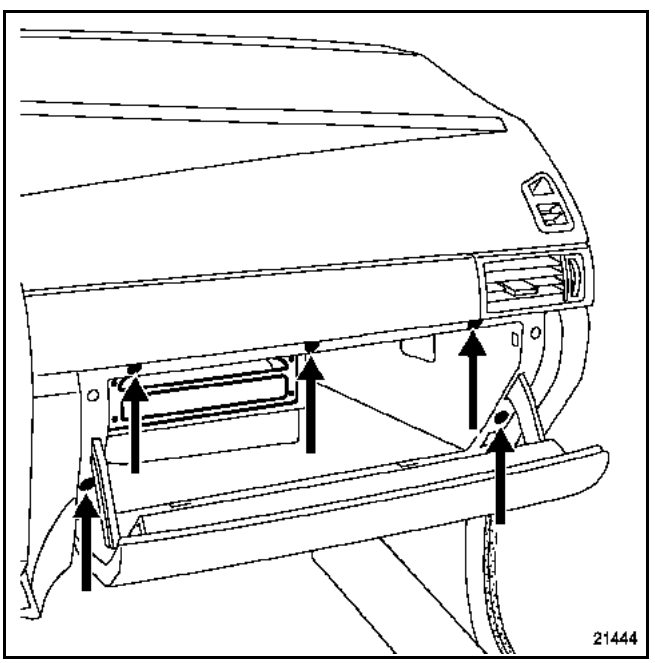

Remove the two passenger compartment filter cover bolts (1).

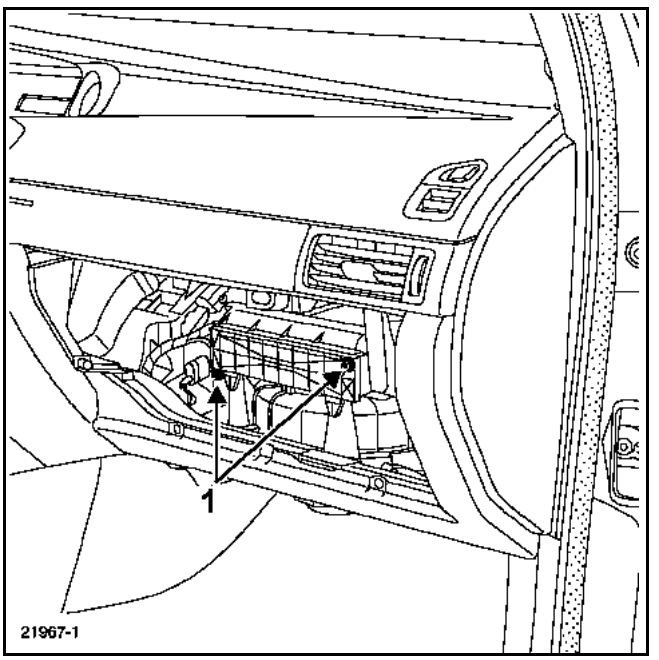

Remove the passenger compartment filter.

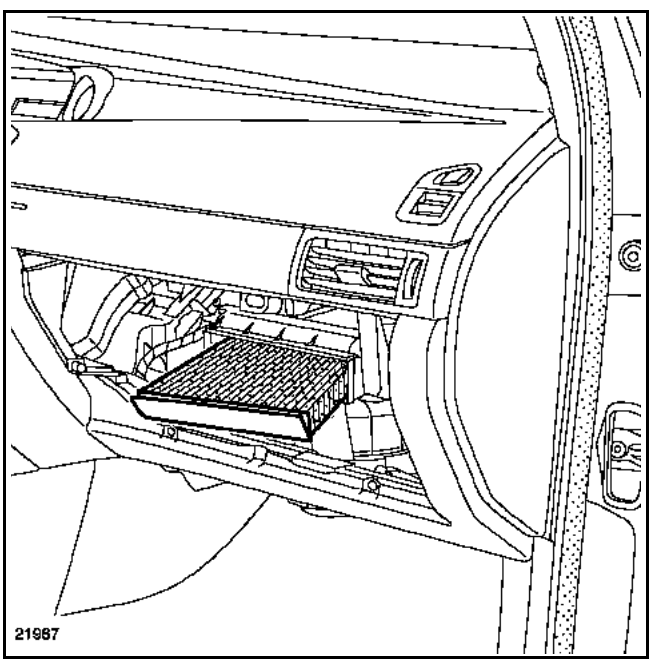

REFITTING

Carry out the removal procedure in reverse.

NOTE:
To initialise the system, refer to the **Initialisation** section.

GETtheMANUALS.org

Fitted in front of the external air inlet, it filters the air and ensures the air is totally clean before being let into the passenger compartment.

REMOVAL

Open the glovebox.

Remove the navigation CD player on the versions concerned.

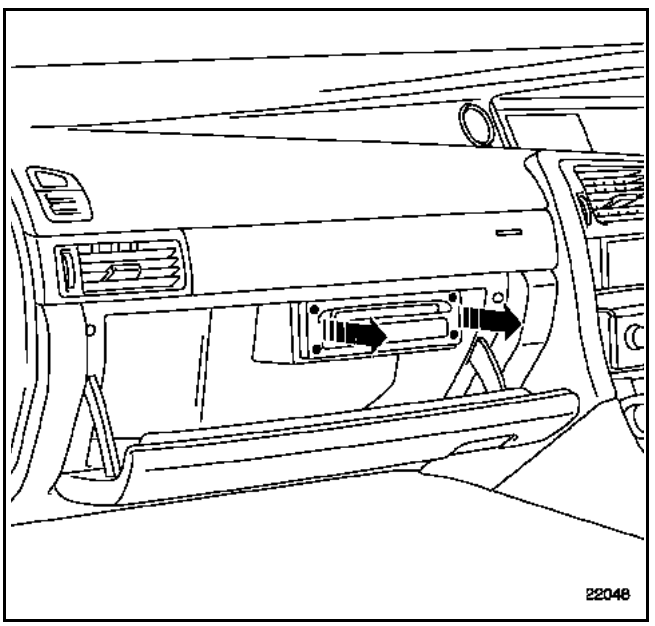

Undo the connections and remove them from the CD player.

Remove the glovebox bolts and connectors.

Remove the glovebox.

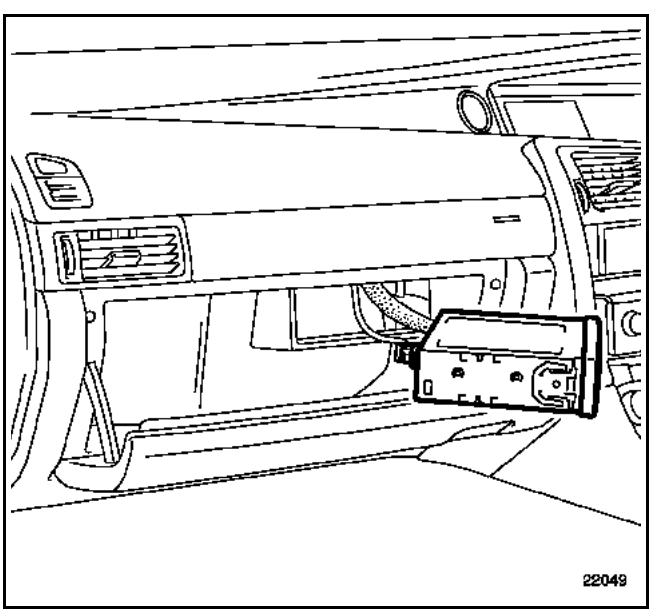

Remove the two passenger compartment filter cover bolts (1).

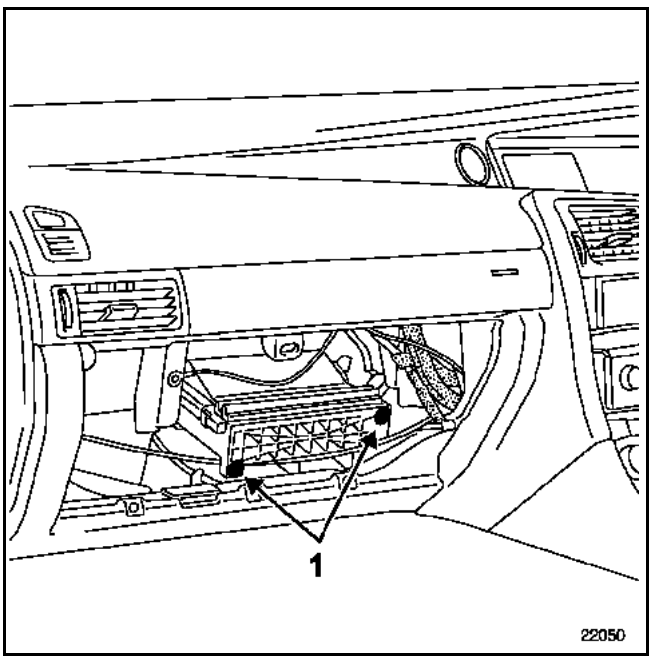

Remove the passenger compartment filter.

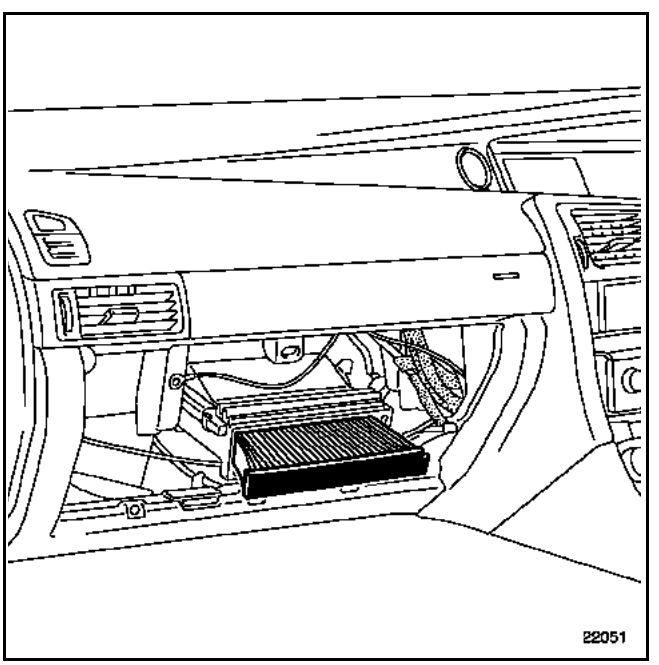

REFITTING

Carry out the removal procedure in reverse.

NOTE:
To initialise the system, refer to the **Initialisation** section.

GETtheMANUALS.org

TIGHTENING TORQUE (in daNm)	
Mounting nut of the pipes on the condenser	0.8

REMOVAL

Disconnect the battery.

Drain the refrigerant circuit using a filling station.

Remove:
– the engine undertray,
– part of the wheel arch liners.

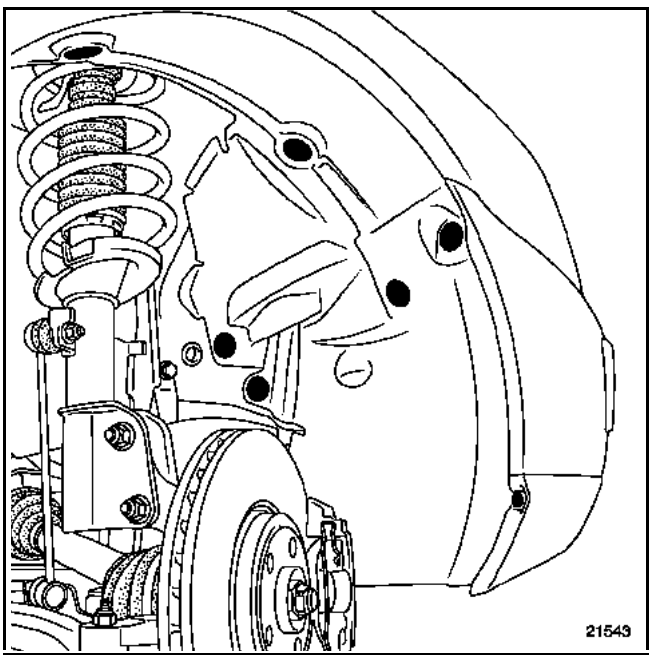

Disconnect the fog light supply connectors (A) (**if fitted**).

Remove the two side mounting bolts (B).

Partially release the bumper (see **section 55A**).

Disconnect the supply to the headlight washer jets (**if fitted on the vehicle**).

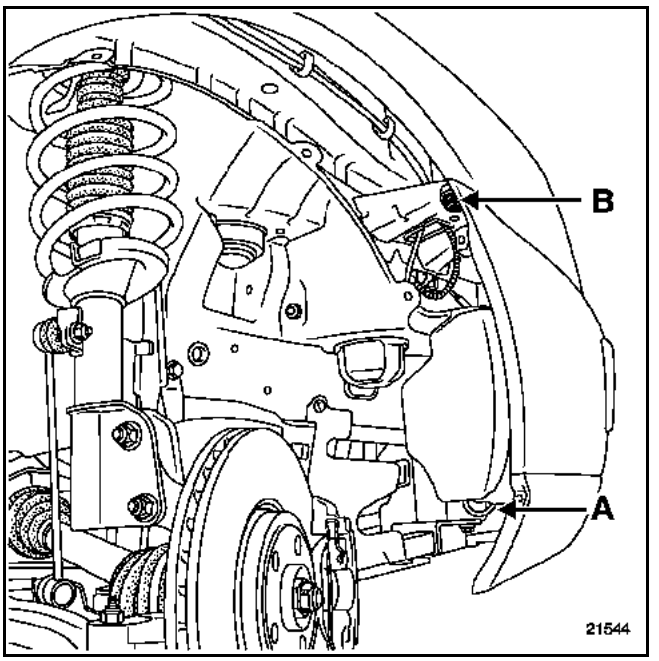

Remove the grille/bumper assembly (**this operation requires two people**).

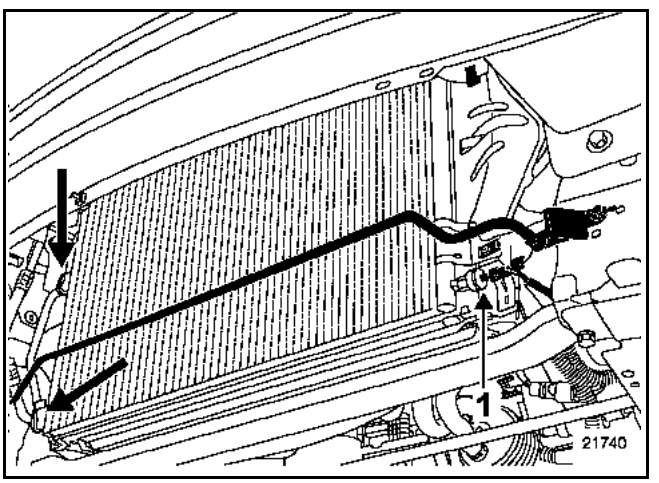

Remove the unions of the coolant circuit pipes on the condenser and seal them.

Disconnect the pressure sensor (1).

Remove:
– the lower mounting clips of the condenser,
– the condenser (**from below**).

GETtheMANUALS.org

REFITTING

Check that the condenser is correctly secured.

Oil the pipe seals with the recommended oil.

Carry out the removal procedure in reverse.

Refit the bumper (**this operation requires two people**).

Connect:
– the pressure sensor,
– the supply to the headlight washer jets (C) (**if fitted to the vehicle**),
– the fog light connections (D) (**if fitted to the vehicle**).

Offer up the bumper in front of the cross member, then line up the guide plates with the indexing components (E).

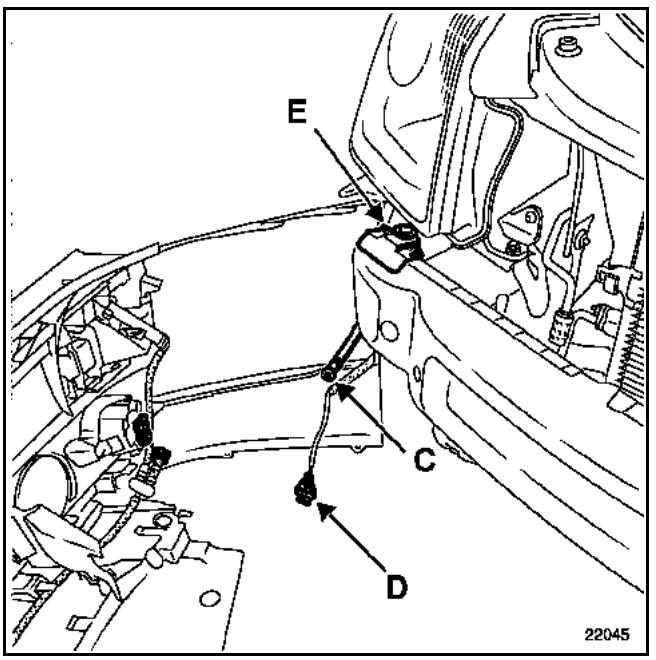

Check the side centring clips and the bumper are correctly secured.

Fill the refrigerant circuit using a filling station.

When replacing the condenser, add **30 ml** of recommended oil to the compressor.

IMPORTANT:
Connect the battery; carry out the necessary programming (see section **8**).

NOTE:
Perform a leak test, with the engine running and with the air conditioning and blower on full, using a leak detector, within 5 minutes after the filling operation.

GETtheMANUALS.org

TIGHTENING TORQUE (in daNm)	
Mounting nuts of the pipes on the condenser	0.8

REMOVAL

Disconnect the battery.

Drain the refrigerant circuit using a filling station.

Remove:
– the engine undertray,
– part of the wheel arch liners.

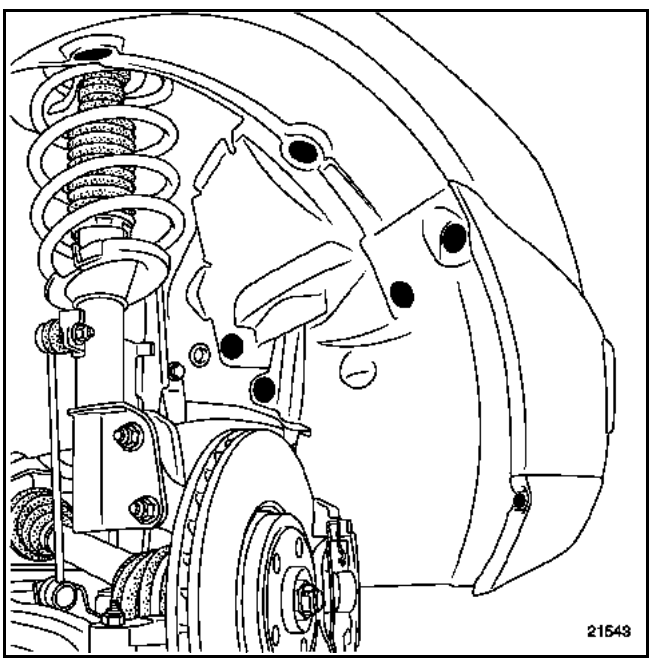

Disconnect the fog light supply connectors (A) (**if fog lights fitted**).

Remove the two side mounting bolts (B).

Partially detach the bumper.

Disconnect the supply to the headlight washer jets (**if fitted on the vehicle**).

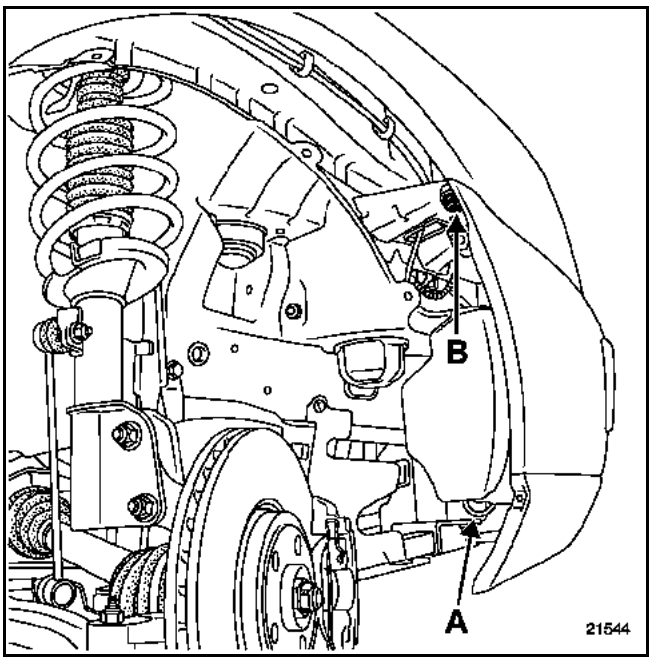

Remove the grille/bumper assembly (**this operation requires two people**).

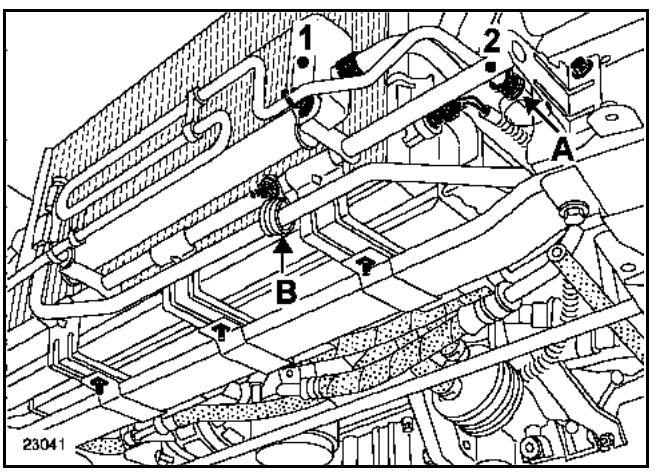

Remove:
– the bumper/grille assembly (this operation requires two people),
– the radar (see section concerned),
– the clip (A) and (B),
– the oil cooler (1) (see section concerned),
– the oil cooler mounting (2),
– the unions of the cold circuit pipes on the condenser and seal them,
– the lower mounting clips of the condenser,
– the condenser (**from below**).

GETtheMANUALS.org

REFITTING

Check that the condenser is correctly secured.

Oil the pipe seals with the recommended oil.

Carry out the removal procedure in reverse.

Refit the oil cooler (see **section 19A**).

Ensure the radiator and condenser fins are not damaged during refitting; protect them if necessary.

Refit the bumper (**this operation requires two people**).

Connect:
– the supply to the headlight washer jets (C) (**if fitted**),
– the fog light connections (D) (**if fitted to the vehicle**).

Offer up the bumper in front of the cross member, then line up the guide plates with the indexing components (E).

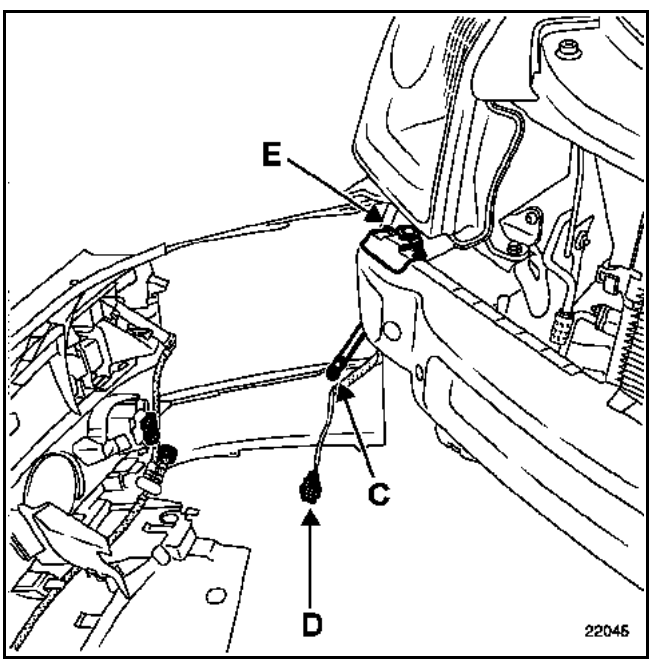

Check the side centring clips and the bumper are correctly secured.

Fill the refrigerant circuit using a filling station.

When replacing the condenser, add **30 ml** of recommended oil to the compressor.

IMPORTANT:
Connect the battery; carry out the necessary programming (see section **8**).

NOTE:
Perform a leak test, with the engine running and with the air conditioning and blower on full, using a leak detector, within 5 minutes after the filling operation.

GETtheMANUALS.org

TIGHTENING TORQUES (in daNm)	
Mounting nut on the dehydration canister	**0.8**
Bolt on the dehydration canister	**0.8**

REMOVAL

Disconnect the battery.

Drain the refrigerant circuit using a filling station.

Remove from their mountings:
– the power assisted steering reservoir,
– the fuel vapour absorber bleed solenoid valve (for F4R engines),
– the diesel fuel filter (for G9T engines).

Remove:
– the two engine undertray bolts (A),
– the two clamps securing the pipes to the dehydration canister,
– the canister with its mounting.

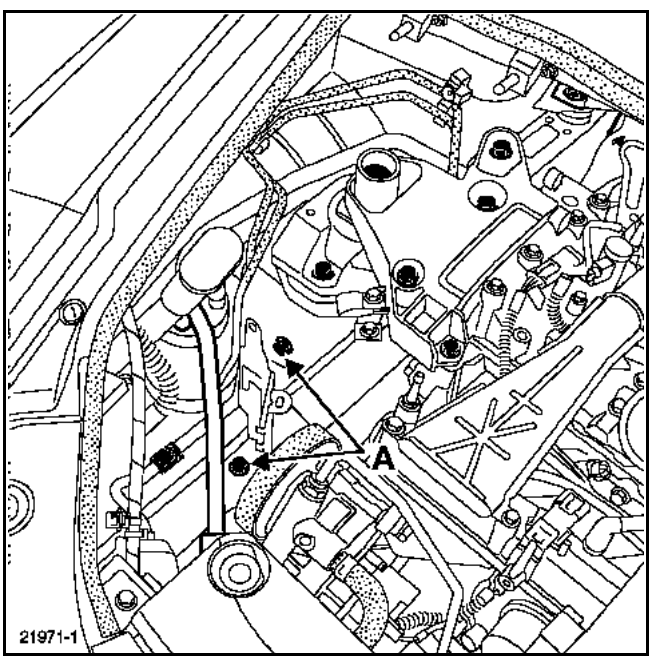

REFITTING

Oil the pipe seals with the recommended oil.

Carry out the removal procedure in reverse.

Fill the refrigerant circuit using a filling station.

When changing the dehydration rechargeable battery, add **15 ml** of recommended oil to the compressor.

IMPORTANT:
Connect the battery; carry out the necessary programming (see section **8**).

NOTE:
Perform a leak test with the engine running and air conditioning and blower at maximum, and check with a leak detector within 5 minutes after the filling operation.

GETtheMANUALS.org

TIGHTENING TORQUES (in daNm)	▽
Mounting nut on the dehydration canister	0.8
Bolt on the dehydration canister	0.8

REMOVAL

Disconnect the battery.

Drain the refrigerant circuit using a filling station.

Remove:
– the two bolts (A) of the air inlet tract,
– the air inlet tract,

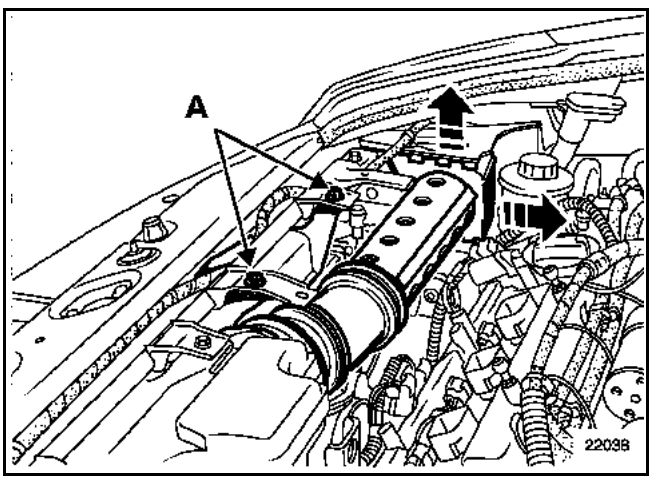

– the electrical harness (B) on the air inlet unit cover.

Partially release the windscreen washer reservoir pipe.

Remove:
– the inlet unit cover,
– the bolt (C) inside the air inlet unit,
– the air inlet unit.

Release the power assisted steering reservoir.

Remove:
– the two power assisted steering reservoir mounting plate bolts,
– the two clamps securing the pipes to the dehydration canister,
– the dehydration canister with its mounting.

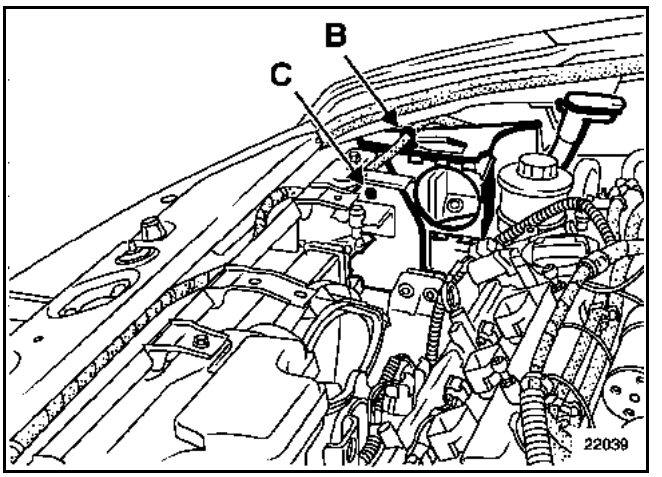

REFITTING

Oil the pipe seals with the recommended oil.

Carry out the removal procedure in reverse.

Fill the refrigerant circuit using a filling station.

When changing the dehydration canister, add **15 ml** of recommended oil to the compressor.

IMPORTANT:
Connect the battery; carry out the necessary programming (see section **8**).

NOTE:
Perform a leak test with the engine running and air conditioning and blower at maximum, and check with a leak detector within 5 minutes after the filling operation.

GETtheMANUALS.org

TIGHTENING TORQUES (in daNm)	
Mounting nuts on the dehydration canister	0.8
Bolt on the dehydration canister	0.8

REMOVAL

Disconnect the battery.

Drain the refrigerant circuit using a filling station.

Remove the diesel pipes (1) and (2).

Release:
– the power steering reservoir,
– the diesel pipe (3) with the priming pump,
– the diesel filter.

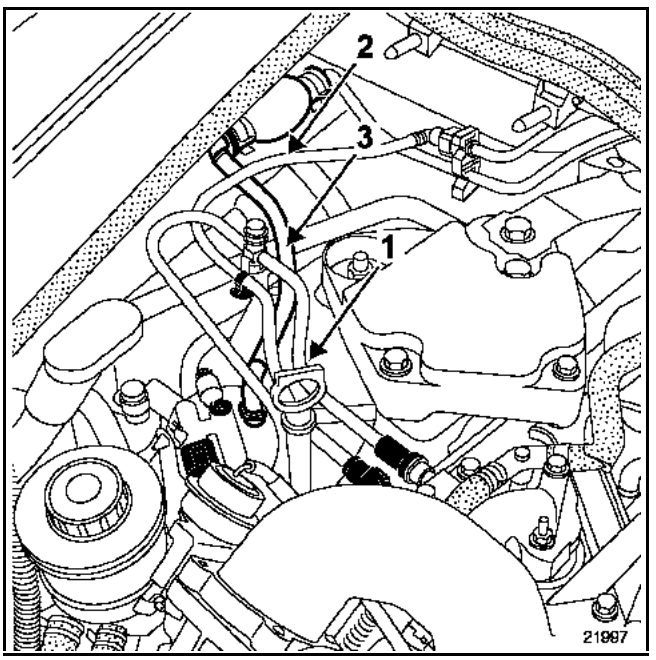

Remove the two power assisted steering reservoir mounting plate bolts.

Remove the power assisted steering reservoir mounting plate.

Remove:
– the two clamps securing the pipes to the dehydration canister,
– the dehydration canister with its mounting.

REFITTING

Oil the pipe seals with the recommended oil.

Carry out the removal procedure in reverse.

Fill the refrigerant circuit using a filling station.

When changing the dehydration canister, add **15 ml** of recommended oil to the compressor.

IMPORTANT:
Connect the battery; carry out the necessary programming (see section **8**).

NOTE:
Perform a leak test with the engine running and air conditioning and blower at maximum, and check with a leak detector within 5 minutes after the filling operation.

GETtheMANUALS.org

REMOVAL

Mount the vehicle on a two post lift.

Disconnect the battery.

Drain the refrigerant circuit using a filling station.

Remove the accessories belt (see **section 07A: "Accessories belt tension"**).

Remember that any belt removed must be replaced.

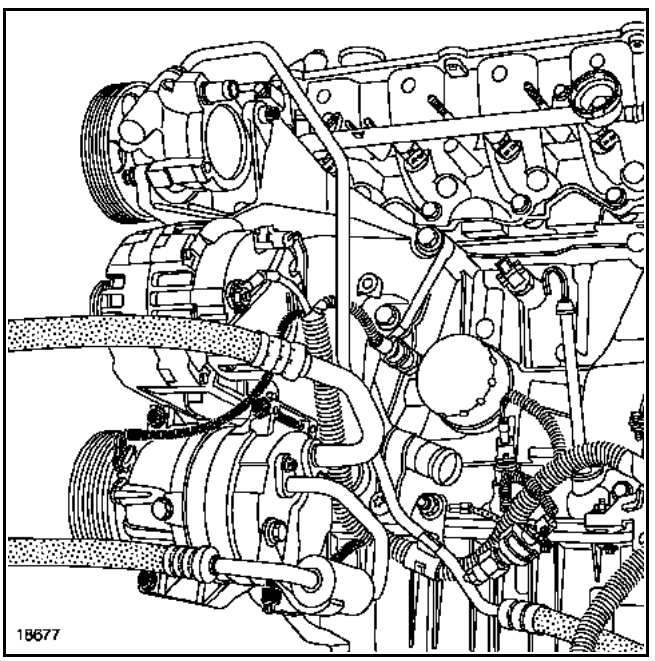

Remove:
– the engine undertray,
– the air conditioning pipes on the compressor,
– the two compressor connectors,
– the transverse bar under the compressor,
– the three compressor mounting bolts.

Remove the compressor.

REFITTING

If the compressor is changed, it is supplied filled with oil for refitting.

IMPORTANT:
Strictly follow the instructions about oil top-ups when working on air-conditioning circuit components.

Oil the hose seals with the recommended oil.

Carry out the removal procedure in reverse.

Tighten the compressor mounting bolts to **2.5 daNm**.

Tighten the refrigerant pipe mounting bolts on the compressor to **0.8 daNm**.

Fill the refrigerant circuit using a filling station.

IMPORTANT:
Connect the battery; carry out the necessary programming (see section **8**).

NOTE:
Perform a leak test with the engine running and air conditioning and blower at maximum, and check with a leak detector within 5 minutes after the filling operation.

GETtheMANUALS.org

REMOVAL

Mount the vehicle on a two post lift.

Disconnect the battery.

Drain the refrigerant circuit using a filling station.

Remove the accessories belt (see **section 07A: "Accessories belt tension"**).

Remember that any belt removed must be replaced.

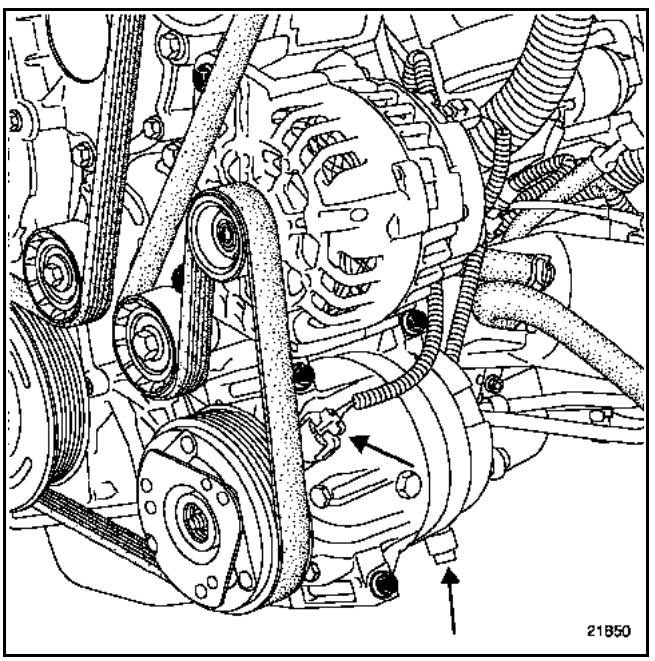

Remove:
– the engine undertray,
– the air conditioning pipes on the compressor and seal them,
– the two compressor connectors,
– the transverse bar under the compressor,
– the three compressor mounting bolts.

Remove the compressor.

REFITTING

If the compressor is changed, it is supplied filled with oil for refitting.

IMPORTANT:
Strictly follow the instructions about oil top-ups when working on air-conditioning circuit components.

Oil the hose seals with the recommended oil.

Carry out the removal procedure in reverse.

Tighten the compressor mounting bolts to **2.5 daNm**.

Tighten the refrigerant pipe mounting bolts on the compressor to **0.8 daNm**.

Fill the refrigerant circuit using a filling station.

IMPORTANT:
Connect the battery; carry out the necessary programming (see section **8**).

NOTE:
Perform a leak test with the engine running and air conditioning and blower at maximum, and check with a leak detector within 5 minutes after the filling operation.

GETtheMANUALS.org

REMOVAL

Mount the vehicle on a two post lift.

Disconnect the battery.

Drain the refrigerant circuit using a filling station.

Remove the accessories belt (see **section 07A: "Accessories belt tension"**).

Remember that any belt removed must be replaced.

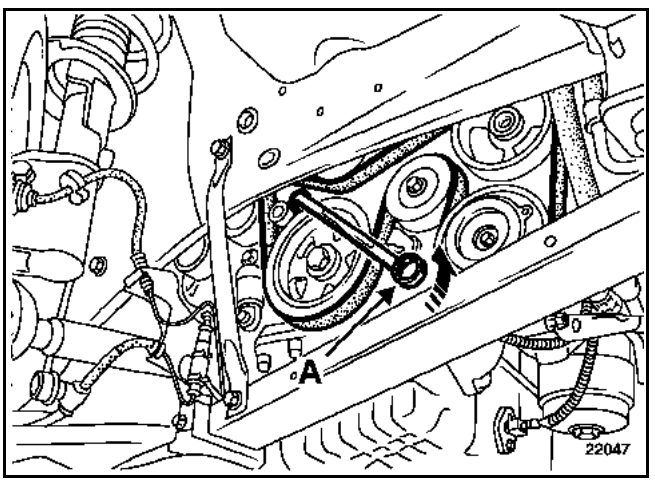

Remove:
– the engine undertray,
– the air conditioning pipes (1) on the compressor and seal them,
– the air conditioning pipe nut (2).

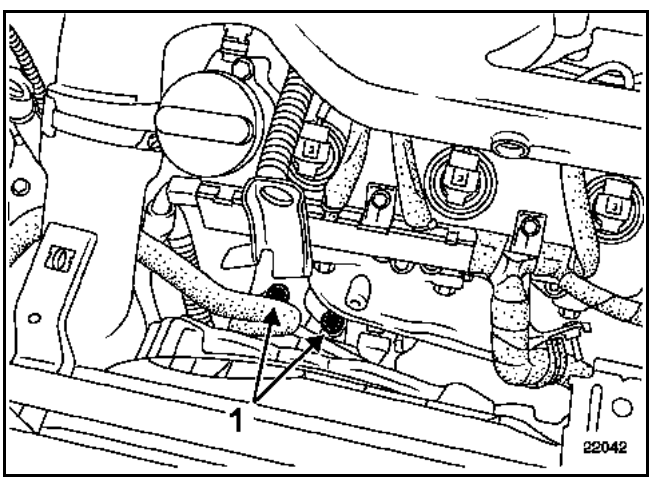

Remove:
– the connection (A),
– the connection (B)
– the two electrical harness clips (C),
– the power assisted steering oil pipe clip (D),
– the refrigerant pipe nut (E) ,

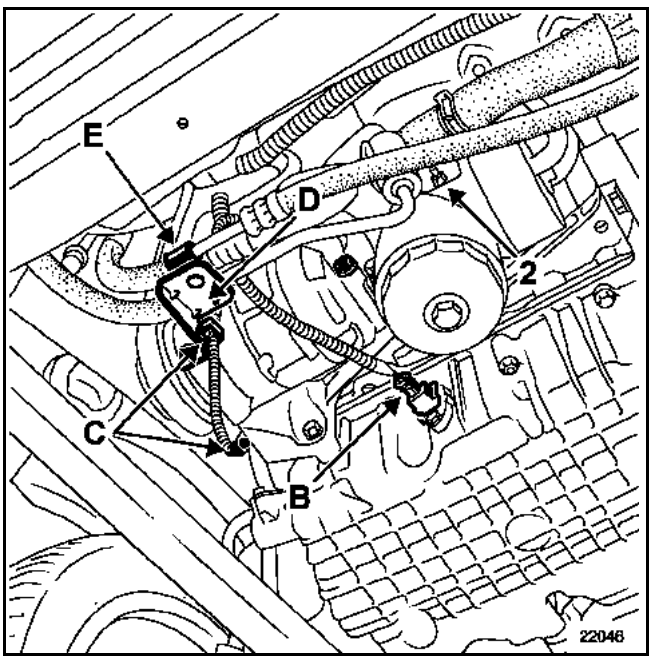

– the transverse bar under the compressor,
– the three compressor mounting bolts.

REFITTING

If the compressor is changed, it is supplied filled with oil for refitting.

IMPORTANT:
Strictly follow the instructions about oil top-ups when working on air-conditioning circuit components.

Oil the hose seals with the recommended oil.

Carry out the removal procedure in reverse.

Tighten the compressor mounting bolts to:
– **2.5 daNm**, for the two bolts located one above the other on the other side of the accessories belt,
– **5 daNm**, for the bolt located next to the oil filter.

Tighten the refrigerant pipe mounting bolts on the compressor to **2.1 daNm**.

Fill the refrigerant circuit using a filling station.

IMPORTANT:
Connect the battery; carry out the necessary programming (see section **8**).

NOTE:
Perform a leak test with the engine running and air conditioning and blower at maximum, and check with a leak detector within 5 minutes after the filling operation.

GETtheMANUALS.org

REMOVAL

Mount the vehicle on a two post lift.

Disconnect the battery.

Drain the refrigerant circuit using a filling station.

Remove the accessories belt (see **section 07A: "Accessories belt tension"**).

Remember that any belt removed must be replaced.

Remove:
– the air inlet tract (see **section 62A: "Rechargeable battery for V4Y engine"**),
– the engine undertray,
– the air conditioning pipe mountings (1) on the compressor.

Remove the compressor pipes.

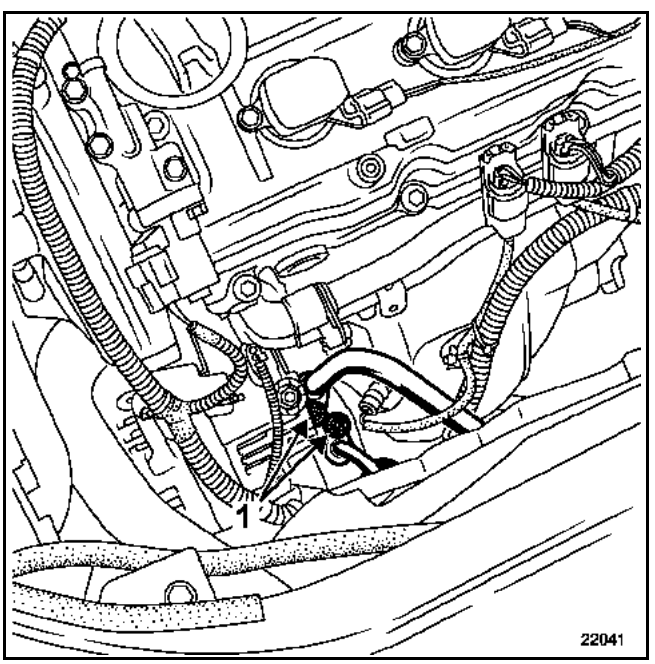

Remove:
– the compressor connections (A),
– the four compressor mounting bolts.

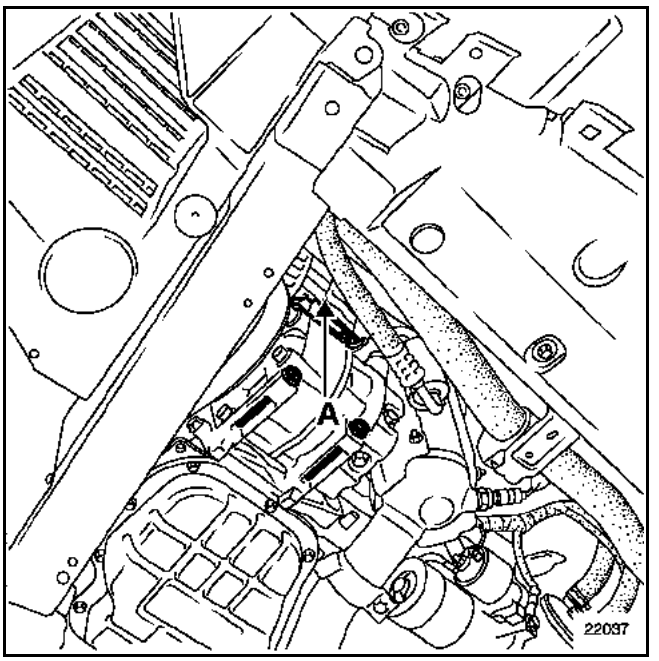

REFITTING

If the compressor is changed, it is supplied filled with oil for refitting.

IMPORTANT:
Strictly follow the instructions about oil top-ups when working on air-conditioning circuit components.

Oil the hose seals with the recommended oil.

Carry out the removal procedure in reverse.

Tighten the compressor mounting bolts to between **6.96** and **8.92 daNm**.

Tighten the refrigerant pipe mounting bolts on the compressor to **2.1 daNm**.

Fill the refrigerant circuit using a filling station.

IMPORTANT:
Connect the battery; carry out the necessary programming (see section **8**).

NOTE:
Perform a leak test, with the engine running and with the air conditioning and blower on full, using a leak detector, within 5 minutes after the filling operation.

GETtheMANUALS.org

Vel Satis vehicles are fitted with a calibrated expansion opening.

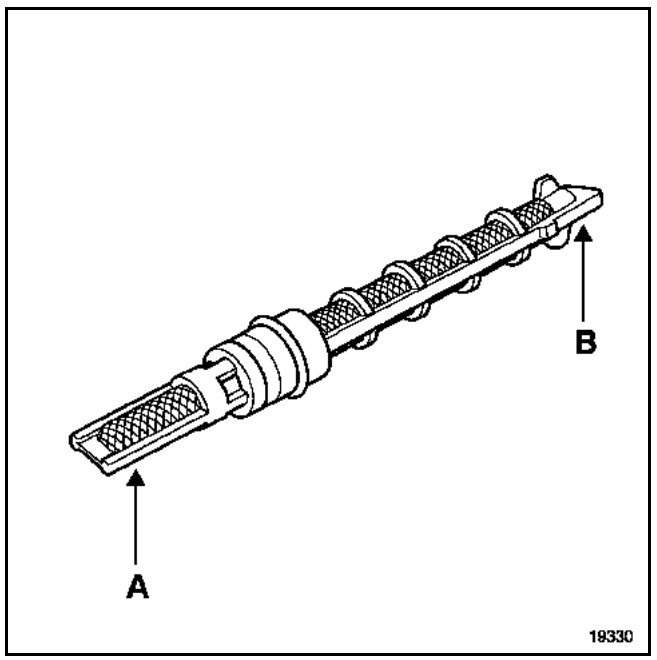

A evaporator side
B condenser side

TIGHTENING TORQUE (in daNm)	
Calibrated opening union	**2.1**

REMOVAL

Disconnect the battery.

Drain the refrigerant circuit using a filling station.

Release the power assisted steering reservoir (1) and the pressure regulator (2).

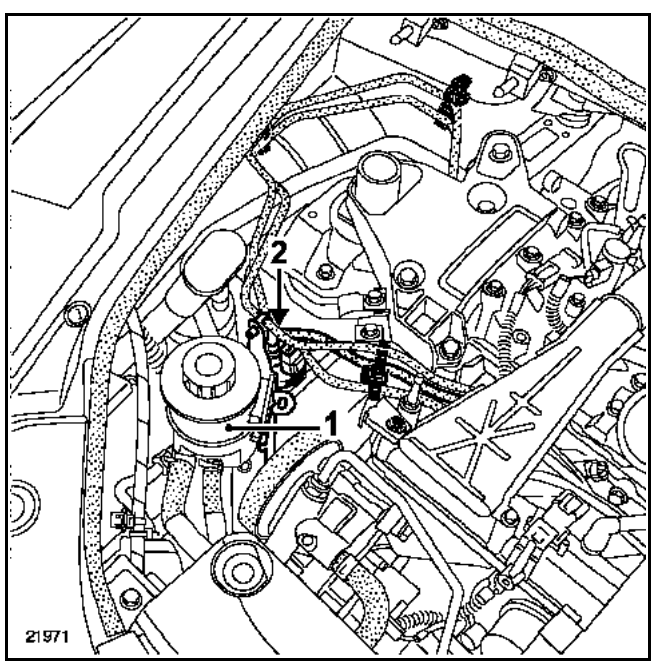

Open the refrigerant pipe retaining clip (D).

Remove:
– the two power assisted steering reservoir mounting plate bolts,
– the power assisted steering reservoir mounting plate.

Slacken the union (C).

Disconnect the refrigerant pipe.

Using long-nosed pliers, take out the calibrated opening.

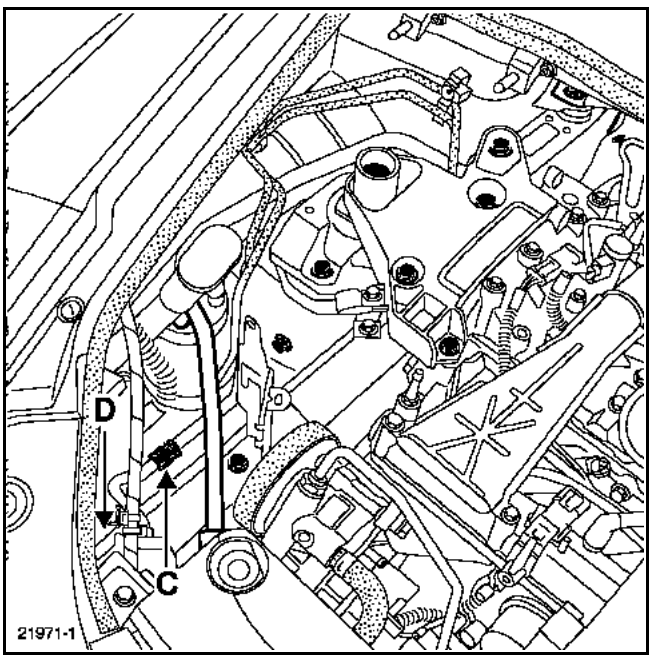

REFITTING

Replace the pipe seal using the recommended oil.

Carry out the removal procedure in reverse.

Fill the refrigerant circuit using a filling station.

When changing the calibrated opening, add **10 ml** of recommended oil to the compressor.

IMPORTANT:
Connect the battery; carry out the necessary programming (see section **8**).

NOTE:
Perform a leak test with the engine running and air conditioning and blower at maximum, and check with a leak detector within 5 minutes after the filling operation.

GETtheMANUALS.org

Vel Satis vehicles are fitted with a calibrated expansion opening.

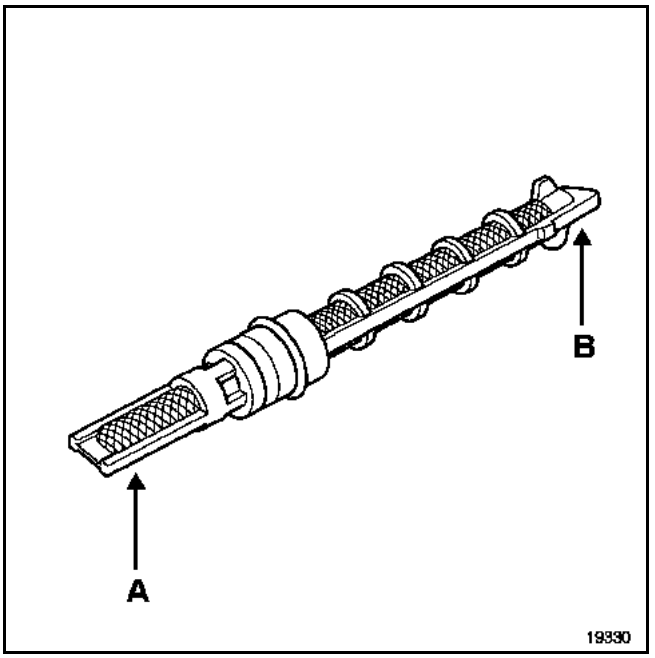

A evaporator side
B condenser side

TIGHTENING TORQUE (in daNm)	
Calibrated opening union	**2.1**

REMOVAL

Disconnect the battery.

Drain the refrigerant circuit using a filling station.

Release the power assisted steering reservoir (1) and the pressure regulator.

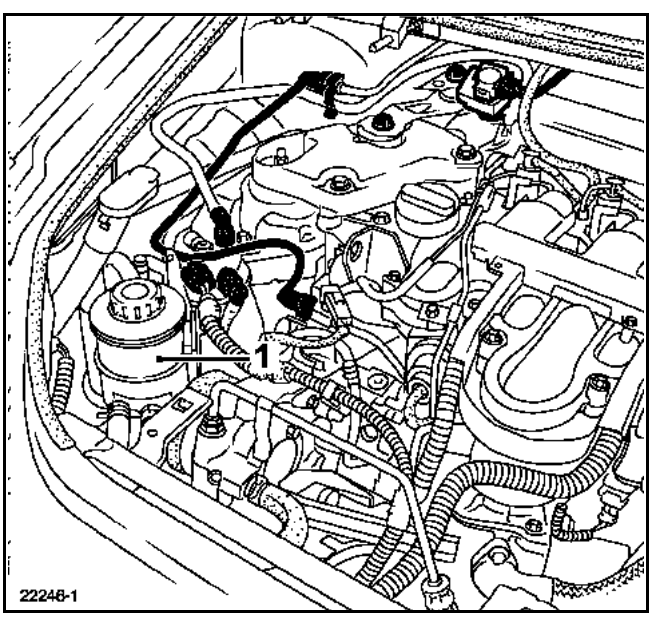

Open the refrigerant pipe retaining clip (D).

Remove:
– the two power assisted steering reservoir mounting plate bolts,
– the power assisted steering reservoir mounting plate.

Slacken the union (C).

Disconnect the refrigerant pipe.

Using long-nosed pliers, take out the calibrated opening.

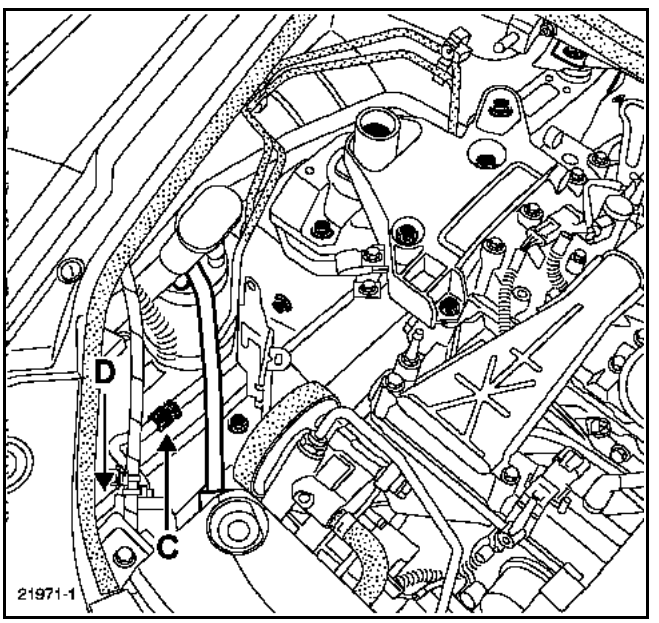

REFITTING

Replace the pipe seal using the recommended oil.

Carry out the removal procedure in reverse.

Fill the refrigerant circuit using a filling station.

When changing the calibrated opening, add **10 ml** of recommended oil to the compressor.

IMPORTANT:
Connect the battery; carry out the necessary programming (see section **8**).

NOTE:
Perform a leak test with the engine running and air conditioning and blower at maximum, and check with a leak detector within 5 minutes after the filling operation.

GETtheMANUALS.org

Vel Satis vehicles are fitted with a calibrated expansion opening.

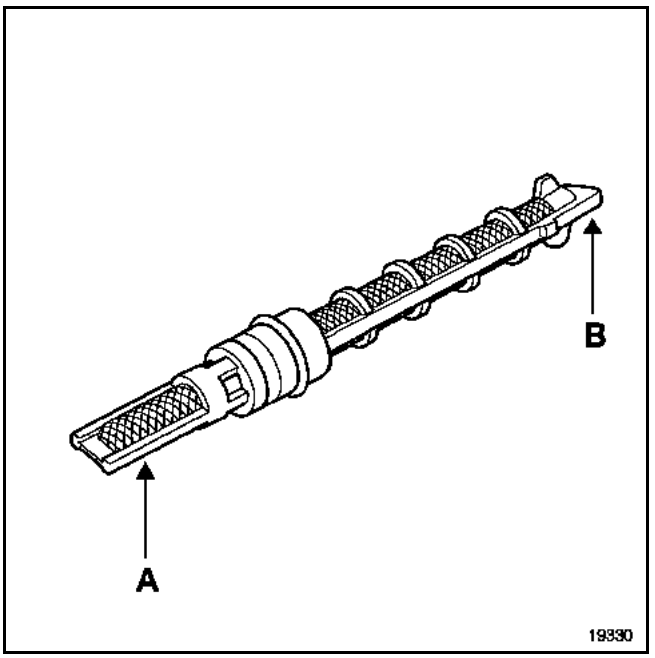

A evaporator side
B condenser side

TIGHTENING TORQUE (in daNm)	
Calibrated opening union	**2.1**

REMOVAL

Disconnect the battery.

Drain the refrigerant circuit using a filling station.

Remove the air inlet tract (see **Section 62A: Dehydration canister: V4Y engine**),

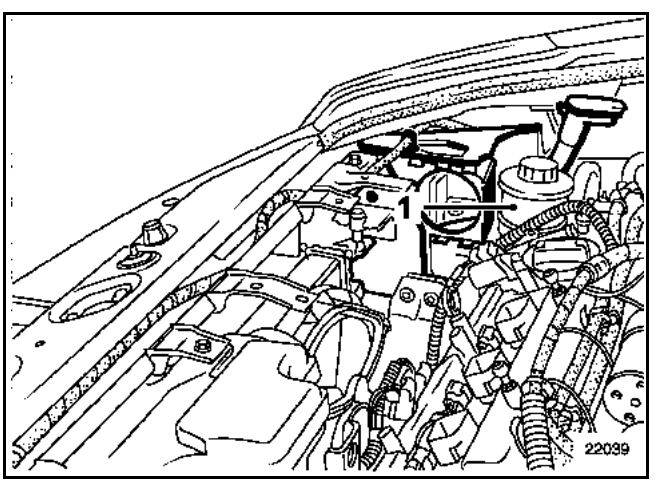

Remove the cover and air unit assembly.

Release the power assisted steering reservoir (1).

Remove:
– the two power assisted steering reservoir mounting plate bolts,
– the power assisted steering reservoir mounting plate (2).

Slacken the union (C).

Disconnect the refrigerant pipe.

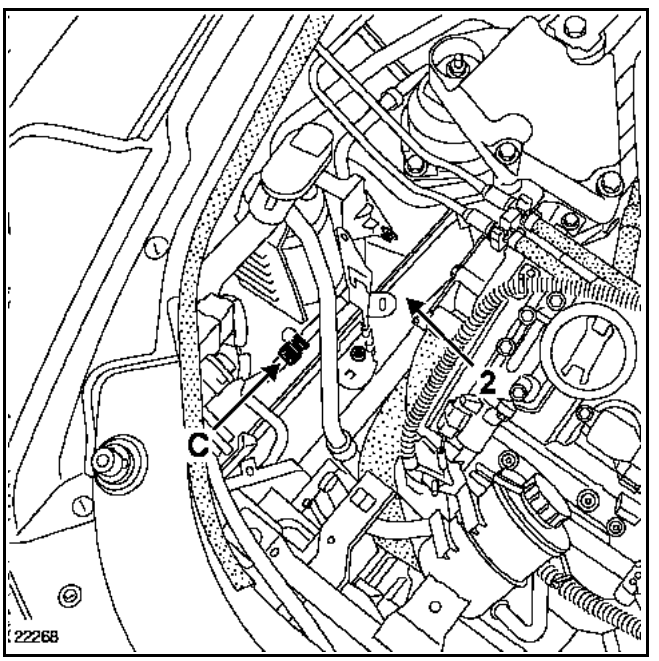

REFITTING

Replace the pipe seal using the recommended oil.

Carry out the removal procedure in reverse.

Fill the refrigerant circuit using a filling station.

When changing the calibrated opening, add **10 ml** of recommended oil to the compressor.

IMPORTANT:
Connect the battery; carry out the necessary programming (see section **8**).

NOTE:
Perform a leak test with the engine running and air conditioning and blower at maximum, and check with a leak detector within 5 minutes after the filling operation.

GETtheMANUALS.org

Vel Satis vehicles are fitted with a calibrated expansion opening.

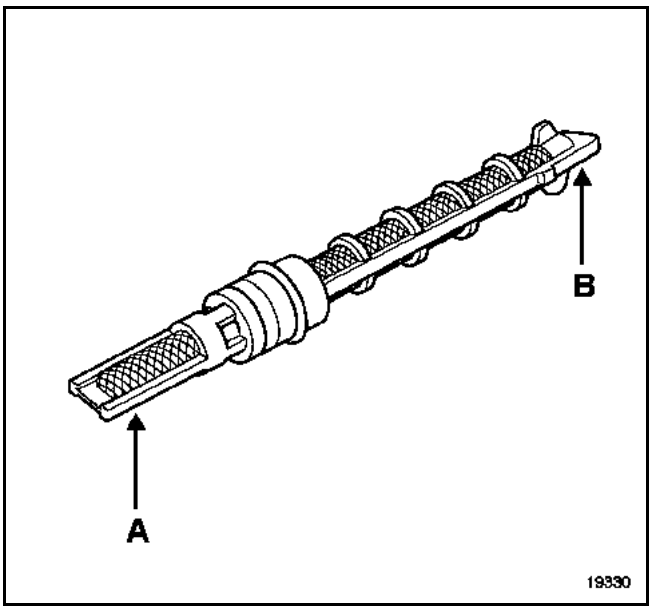

A evaporator side
B condenser side

TIGHTENING TORQUE (in daNm)	
Calibrated opening union	**2.1**

REMOVAL

Disconnect the battery.

Drain the refrigerant circuit using a filling station.

Release the power assisted steering reservoir (1) and the pressure regulator.

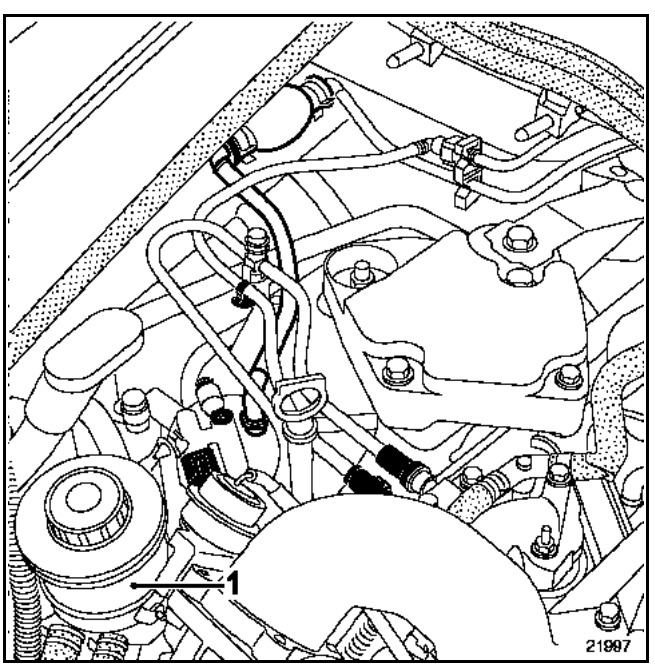

Open the refrigerant pipe retaining clip (D).

Remove:
– the two power assisted steering reservoir mounting plate bolts,
– the power assisted steering reservoir mounting plate.

Slacken the union (C).

Disconnect the refrigerant pipe.

Using long-nosed pliers, take out the calibrated opening.

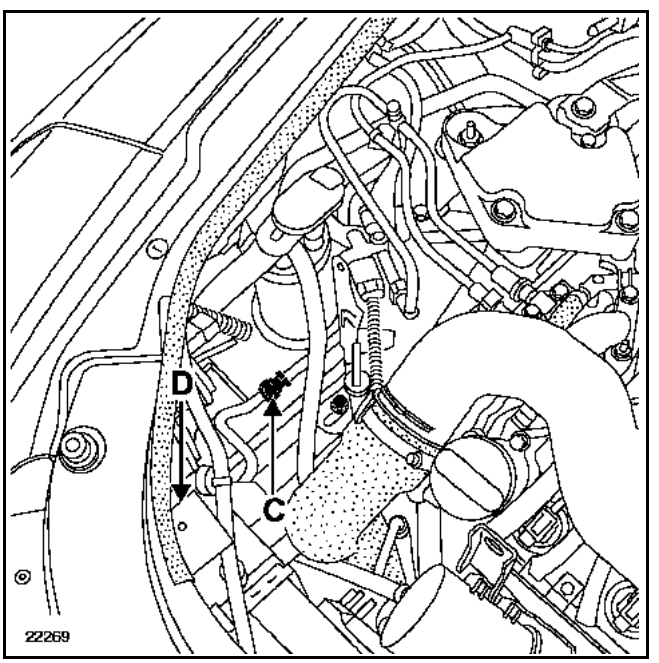

REFITTING

Replace the pipe seal using the recommended oil.

Carry out the removal procedure in reverse.

Fill the refrigerant circuit using a filling station.

When changing the calibrated opening, add **10 ml** of recommended oil to the compressor.

IMPORTANT:
Connect the battery; carry out the necessary programming (see section **8**).

NOTE:
Perform a leak test with the engine running and air conditioning and blower at maximum, and check with a leak detector within 5 minutes after the filling operation.

GETtheMANUALS.org

TIGHTENING TORQUES (in daNm)	▽
Beam bolt	2.1
Beam side bolt	0.8
Scuttle panel union	0.8

REMOVAL

For (F4R Turbocharged) versions only

Place the vehicle on a two-post lift in order to push back the heat shield on the front section of the exhaust system.

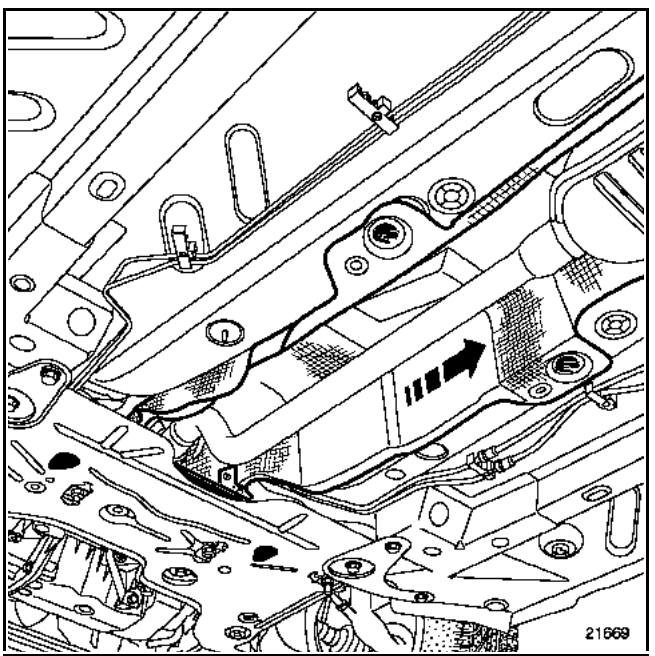

Remove the engine heat shield mountings and move it slightly in order to be able to reach the air conditioning pipe nuts located at the bulkhead junction.

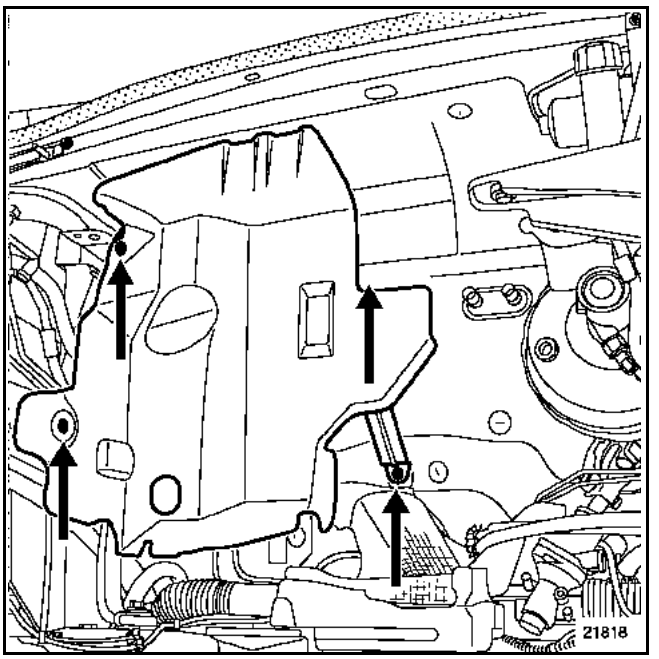

For all versions

Drain the refrigerant circuit using a filling station for **R134**.

Remove the engine undertray.

Drain the cooling circuit.

IMPORTANT:
Follow the recommendations contained in section 88C relating to the air bag system.

Disconnect the battery.

GETtheMANUALS.org

Passenger compartment side

Remove:
– the steering column (see **section 36B: "Steering column"**),
– the central console (see **section 57A: "Central console"**),
– the central fan assembly,
– the dashboard (see **section 57B: "Dashboard"**),
– the electrical harness assembly,
– the fuse and relay unit(s),
– the voice synthesiser (depending on version),
– the reinforcement beam plate (B) nuts,
– the plate.

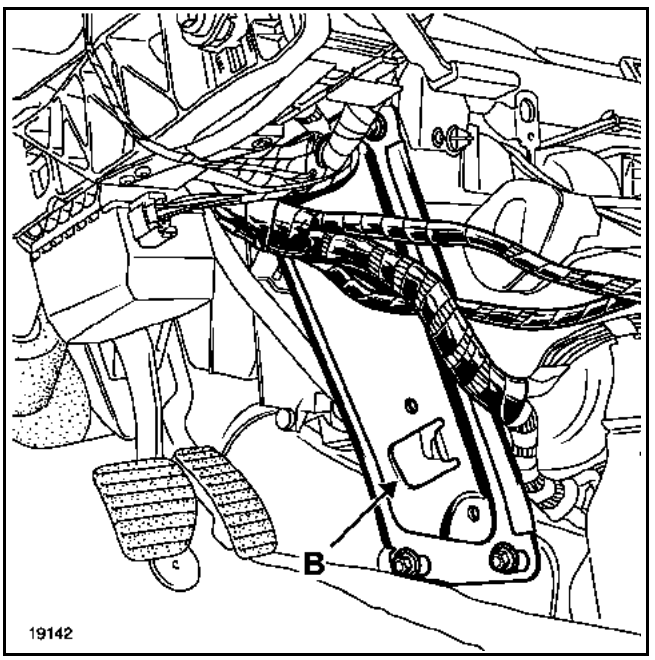

In the engine compartment

For F4R Turbocharged versions only

Loosen the engine tie-bar bolt (A) in order to turn the plate (B) to facilitate access to the two air conditioning pipe mounting nuts located at the bulkhead junction.

Remove:
– the air conditioning pipes at the bulkhead junction and seal them,

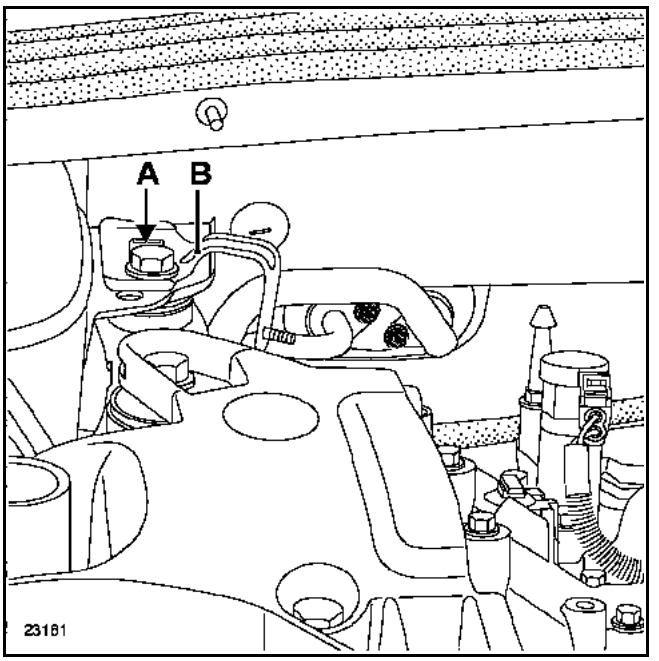

– the door check strap bolt (1) to allow tightening of the beam bolt (D),
– the reinforcement beam mounting bolts (C) and (D).

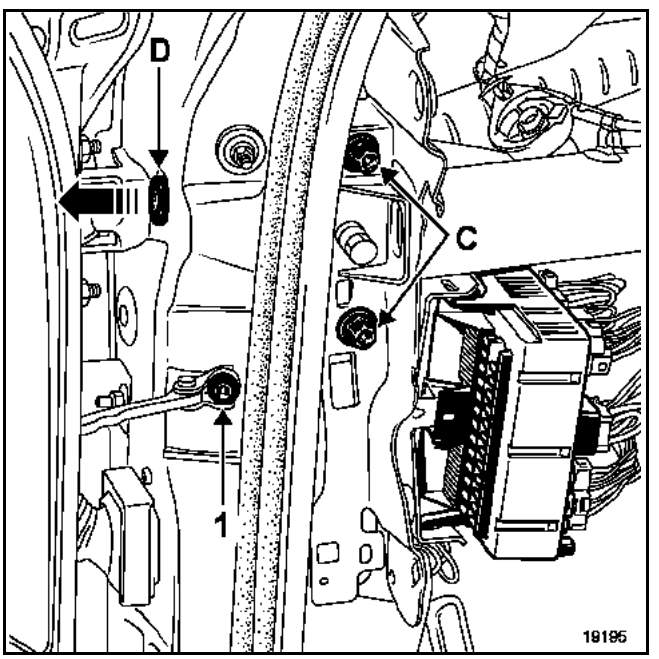

Remove:
– the reinforcement beam,
– the air conditioning unit.

GETtheMANUALS.org

Remove:
– the passenger compartment filter,
– the fan assembly,
– the three mounting bolts of the air recirculation flap.

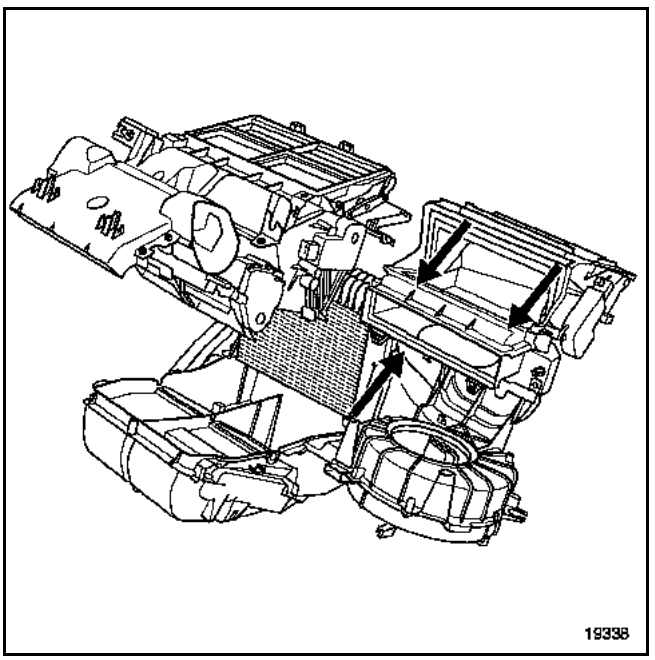

Open the air conditioning unit (F) according to the diagram below.

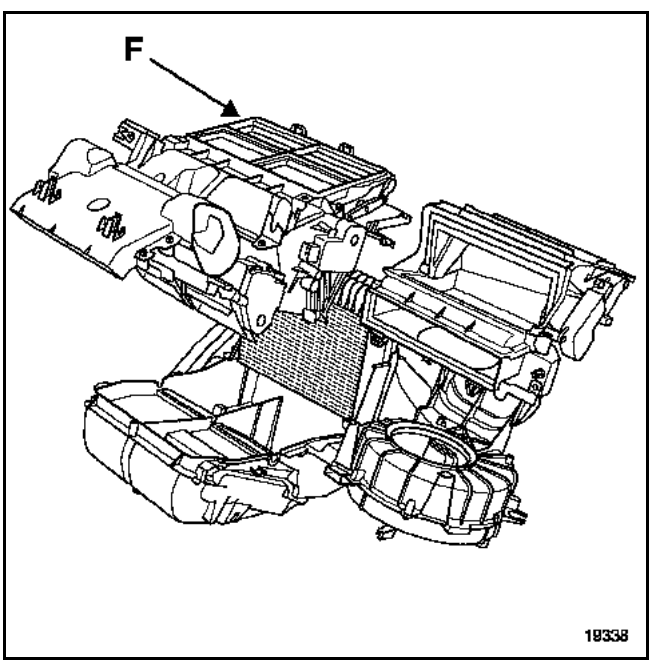

Remove the evaporator.

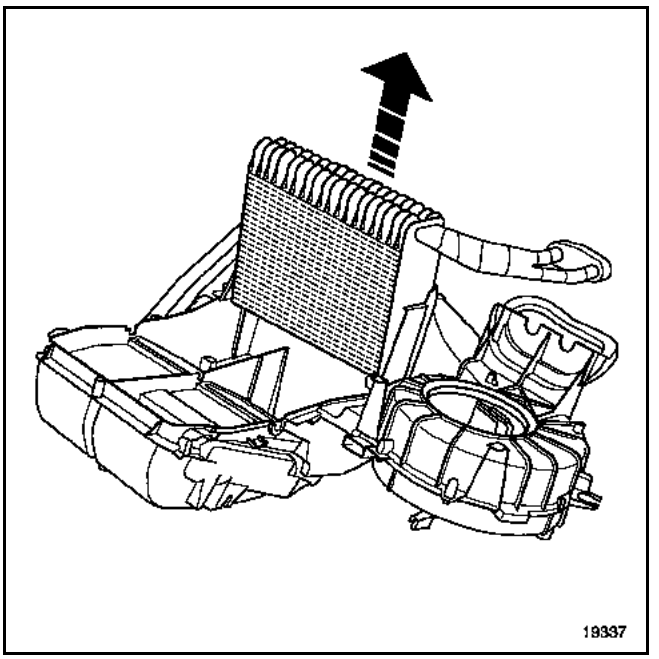

NOTE:
The condenser outlet is located under the exhaust heat shield.

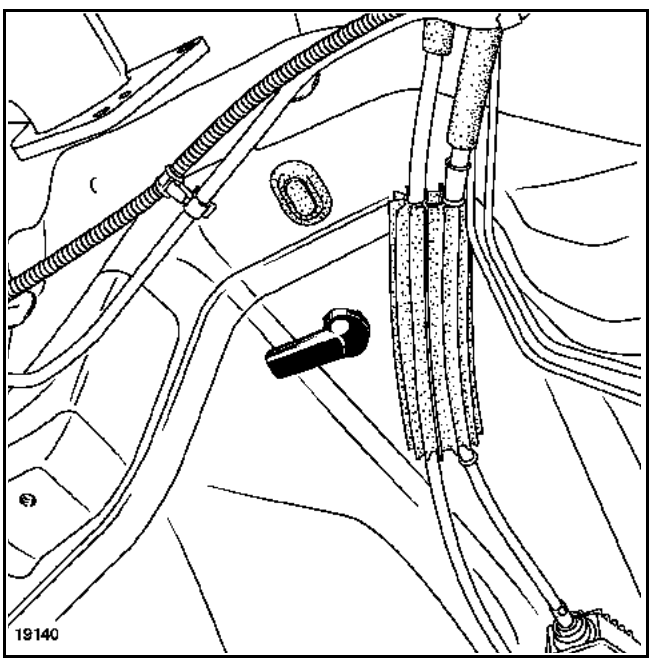

REFITTING

Oil the hose seals with the recommended oil.

Carry out the removal procedure in reverse.

GETtheMANUALS.org

IMPORTANT:
It is essential to fit the electrical harness correctly to avoid any possible damage.

Refitting the dashboard

Before replacing the instrument panel, position the harnesses for the tweeters, the display and the insolation sensor.

IMPORTANT:
Connect the battery; carry out the necessary programming (see section **8**).

NOTE:
Perform a leak test with the engine running and air conditioning and fan at maximum, and check with a leak detector within 5 minutes after the filling operation.

GETtheMANUALS.org

TIGHTENING TORQUES (in daNm)	
Beam bolt	2.1
Beam side bolt	0.8
Scuttle panel union	0.8

REMOVAL

For (F4R Turbocharged) versions only

Place the vehicle on a two-post lift in order to push back the heat shield on the front section of the exhaust system.

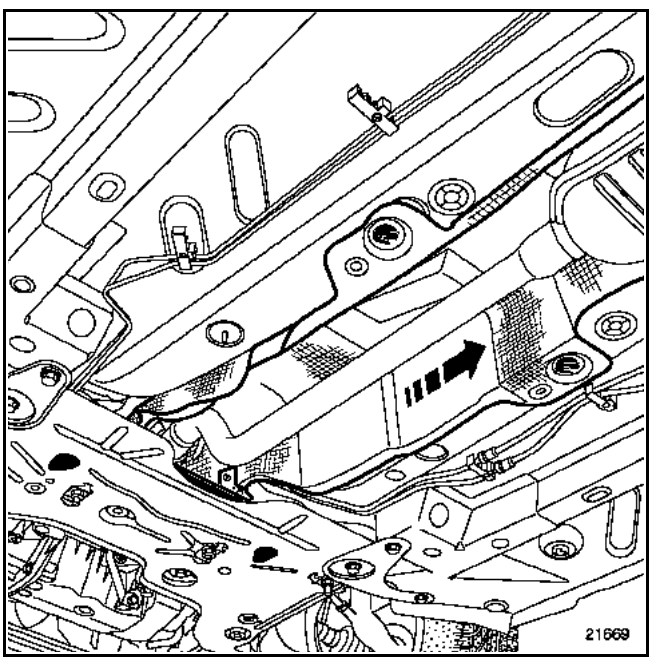

Remove the engine heat screen mountings and move it slightly in order to be able to reach the air conditioning pipe nuts located at the scuttle panel junction.

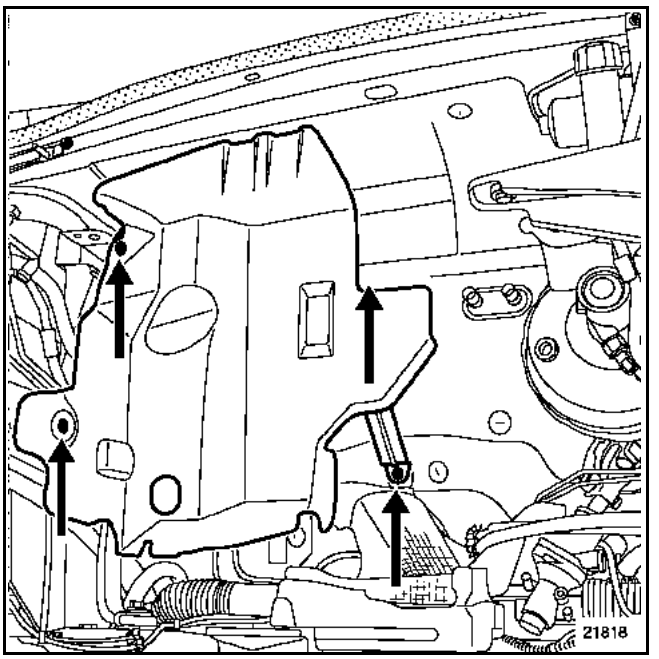

For all versions

Drain the refrigerant circuit using a filling station for **R134**.

Remove the engine undertray.

Drain the cooling circuit.

IMPORTANT:
Follow the recommendations contained in Section 88C relating to the air bag system.

Disconnect the battery.

GETtheMANUALS.org

Passenger compartment side

Remove:
– the steering column (see **section 36B: "Steering column"**),
– the central console (see **section 57A: "Central console"**),
– the central fan assembly,
– the dashboard (see **section 57B: "Dashboard"**),
– the electrical harness assembly,
– the fuse and relay unit(s),
– the voice synthesiser (depending on version),
– the reinforcing beam plate nuts (B),
– the plate.

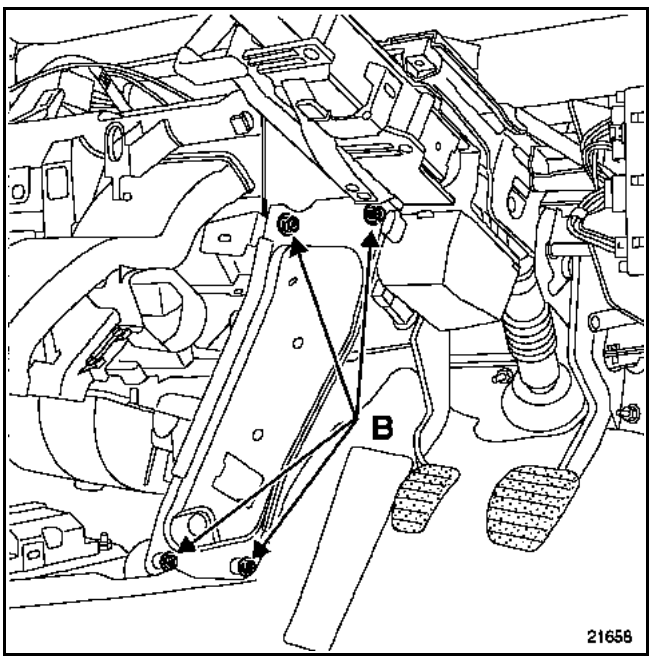

In the engine compartment

For (F4R Turbocharged) versions only

Loosen the engine tie-bar bolt (A) in order to turn the plate (B) to facilitate access to the two air conditioning pipe mounting nuts located at the scuttle panel junction.

Remove:
– the air conditioning pipes at the scuttle panel junction and seal them,

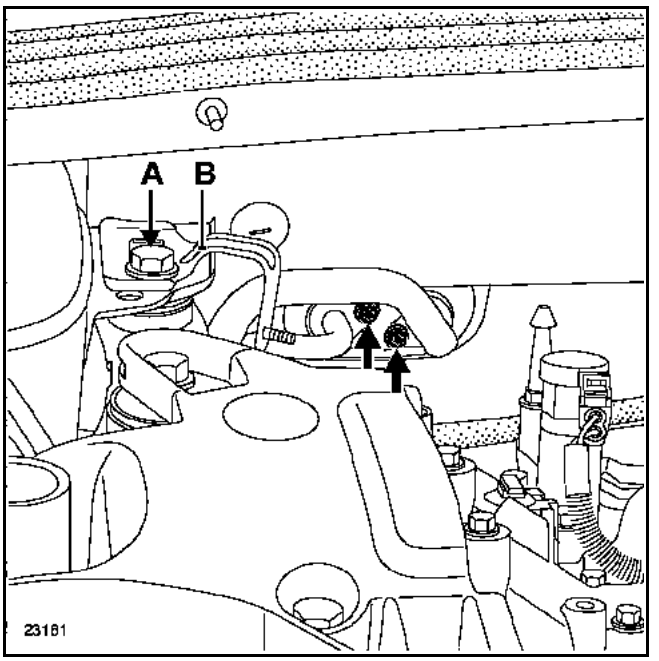

– the relay/fuse box (F),
– the door retainer bolt (1) to allow tightening of the beam bolt (D),
– the reinforcing beam mounting bolts (C) and (D).

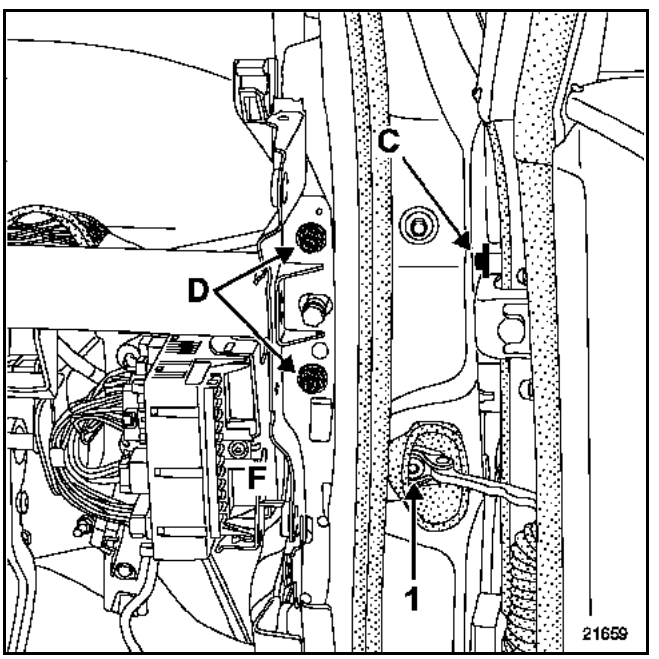

Remove:
– the reinforcing beam,
– the air conditioning unit.

GETtheMANUALS.org

Remove:
– the two clamps (E) and disconnect the two water pipes,
– the two mixing motors (see **section 62A: "Mixing motors"**),
– the bolts (1),

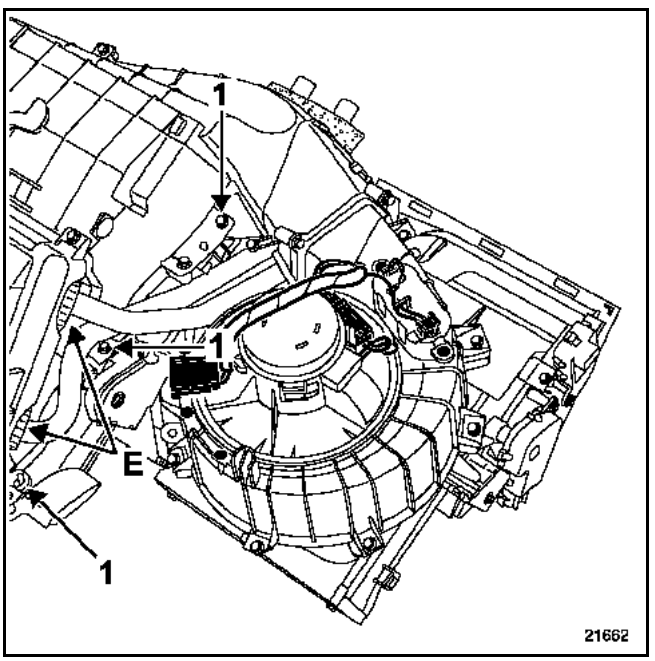

– and the bolts (2).

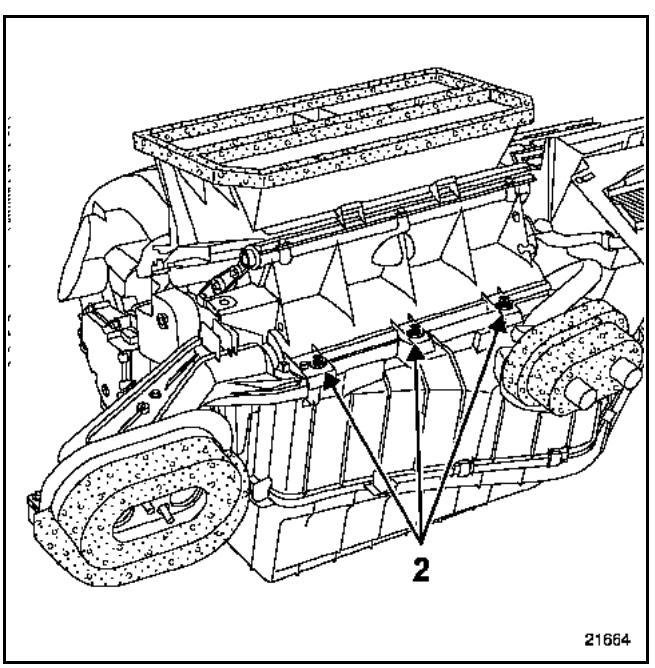

Remove the bolts (3).

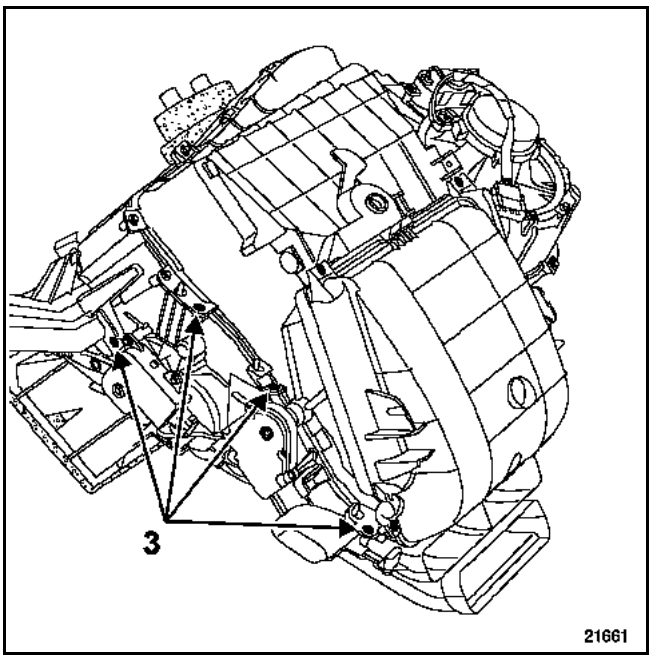

Remove the upper section of air conditioning unit.

Remove the bolts (4).

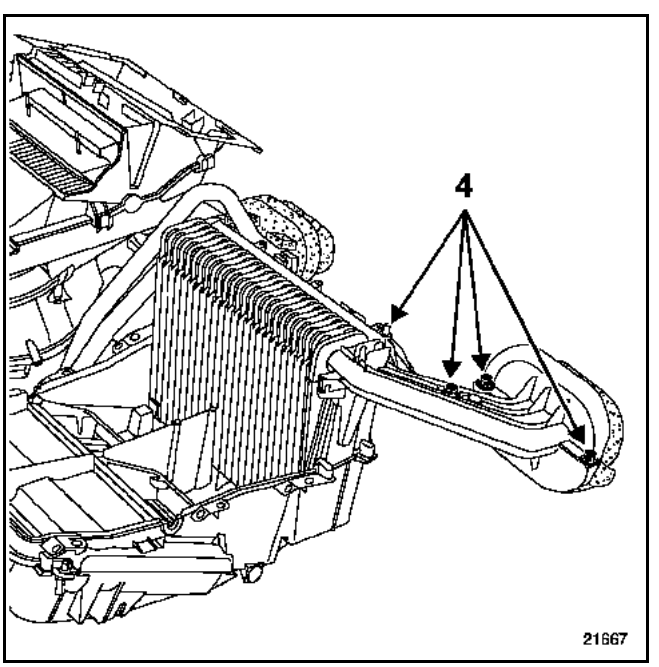

GETtheMANUALS.org

Remove the evaporator.

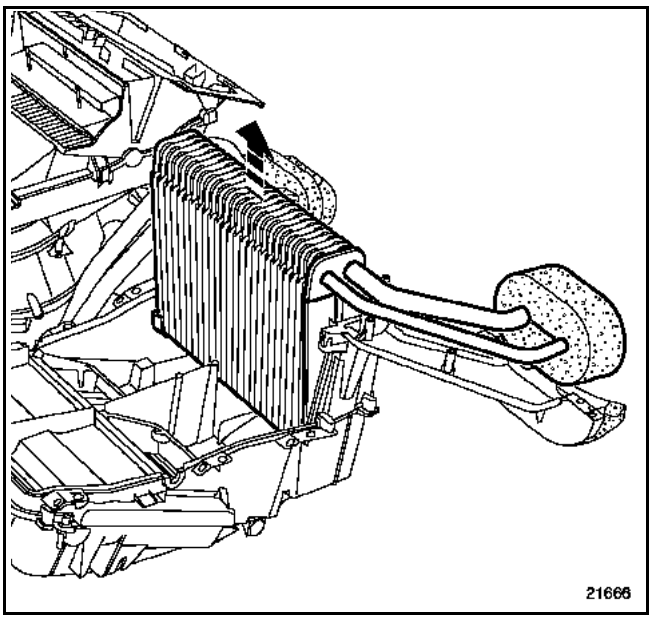

NOTE:
The condenser outlet is located under the exhaust heat shield.

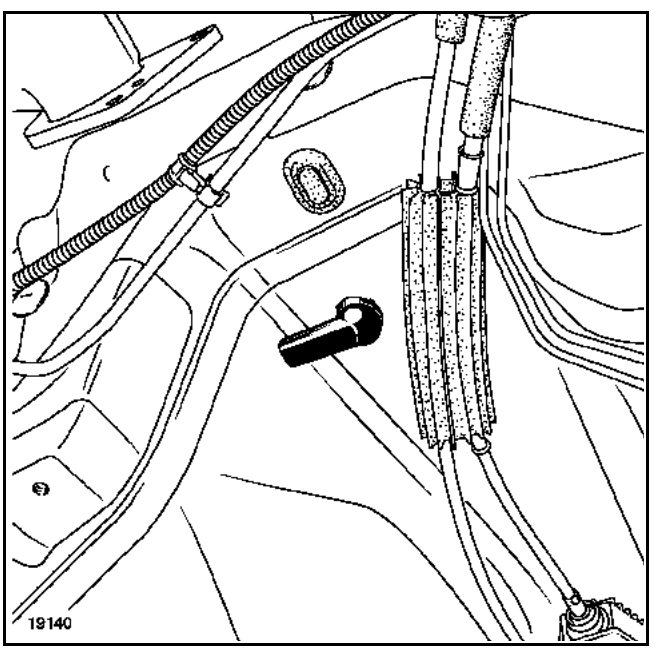

REFITTING

Oil the hose seals with the recommended oil.

Carry out the removal procedure in reverse.

IMPORTANT:
It is essential to refit the electrical harness correctly before refitting the instrument panel to avoid any risk of chafing.

Refitting the instrument panel

Before replacing the instrument panel, position the harnesses for the tweeters, the display and the insolation sensor.

IMPORTANT:
Connect the battery; carry out the necessary programming (see section **8**).

NOTE:
Perform a leak test with the engine running and air conditioning and blower at maximum, and check with a leak detector within 5 minutes after the filling operation.

GETtheMANUALS.org

With the vehicle on a two-post lift.

Disconnect the battery.

Drain the **R134a** refrigerant circuit using a filling station.

HIGH PRESSURE HOSE BETWEEN THE COMPRESSOR AND THE CONDENSER

TIGHTENING TORQUES (in daNm)	
Mounting nut on condenser	**0.8**
Bolt on compressor	**0.8**

REMOVAL

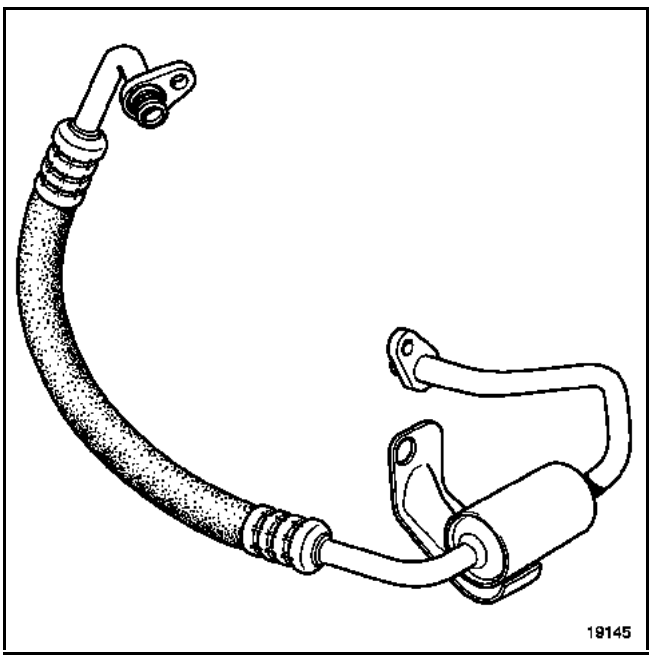

Remove:
- the covers,
- the engine skidplate,
- the front bumper (see **section 55A: "Removing the front bumper"**),
- the mounting nut on the condenser (see **section 62A: Condenser**),
- the bar under the compressor,
- the two mounting bolts on the compressor,
- the hose.

Fit the caps in the ports.

REFITTING

Carry out the removal procedure in reverse.

Oil the hose seals with the recommended oil.

When changing a pipe, add **10 ml** of oil or when a pipe bursts (rapid leak), add **100 ml**.

IMPORTANT:
Connect the battery; carry out the necessary programming (see section **8**).

NOTE:
Perform a leak test with the engine running and air conditioning and blower at maximum, and check with a leak detector within 5 minutes after the filling operation.

GETtheMANUALS.org

HIGH PRESSURE HOSE BETWEEN THE CONDENSER AND THE EVAPORATOR

TIGHTENING TORQUES (in daNm)	
Mounting nut at the scuttle panel junction	0.8
Bolt on condenser	0.8
Calibrated opening union	2.1

REMOVAL

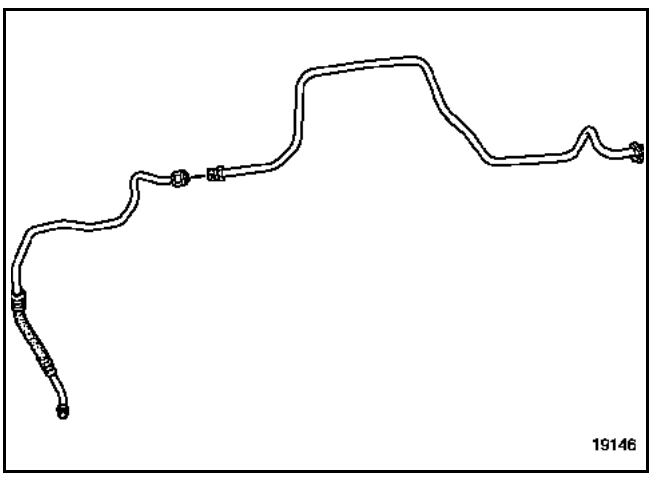

Remove:
– the covers,
– the two heat shields (move only) (see **section 62A: "Evaporator unit"**),
– the right-hand cover mounting (A).

Disconnect the power assisted steering reservoir (B).

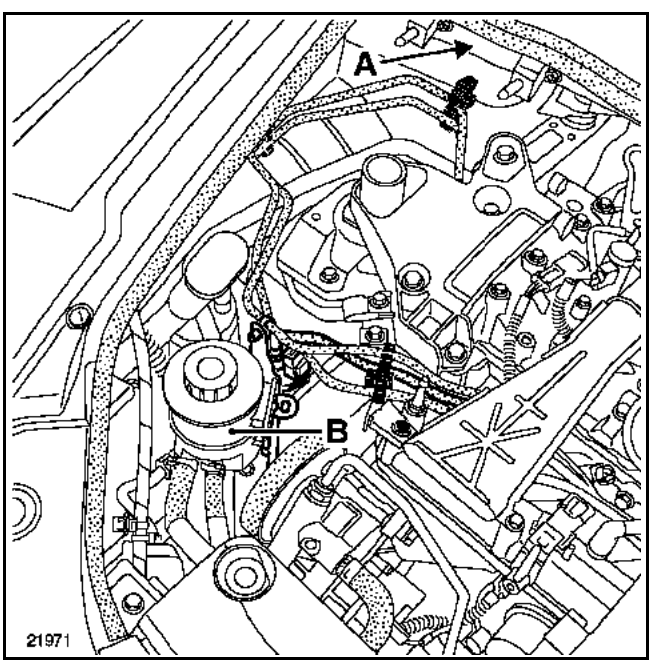

Remove:
– the engine undertray,
– partially, the deflector fixed to the front bumper,

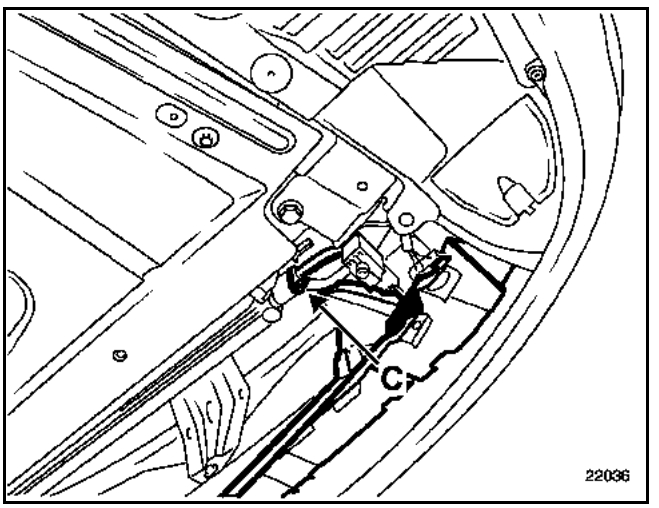

– the mounting nut (C) on the condenser.

Position engine support tool Mot. 1367-02.

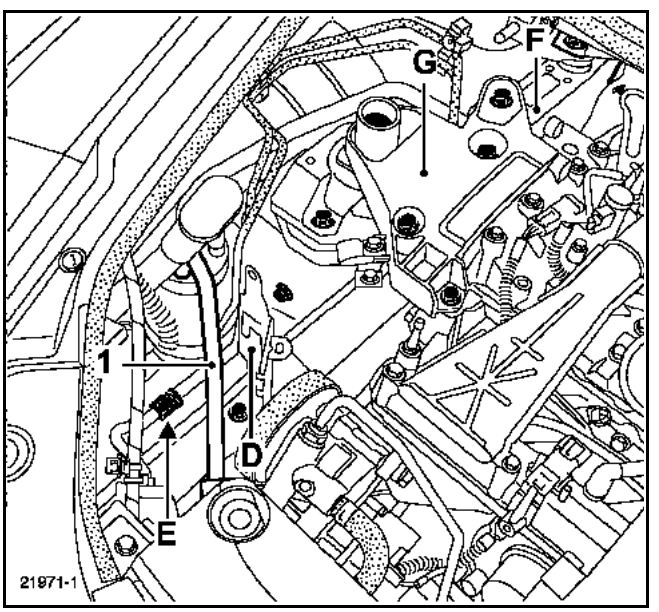

Remove:
– the power assisted steering reservoir mounting (D),
– the nut on the pipe canister (1) and remove the pipe on the canister side.

Slacken the union (E).

Remove:
– the engine upper tie-bar (F).
– the suspended engine mounting cover (G).

GETtheMANUALS.org

Partially remove the petrol pipes (2).

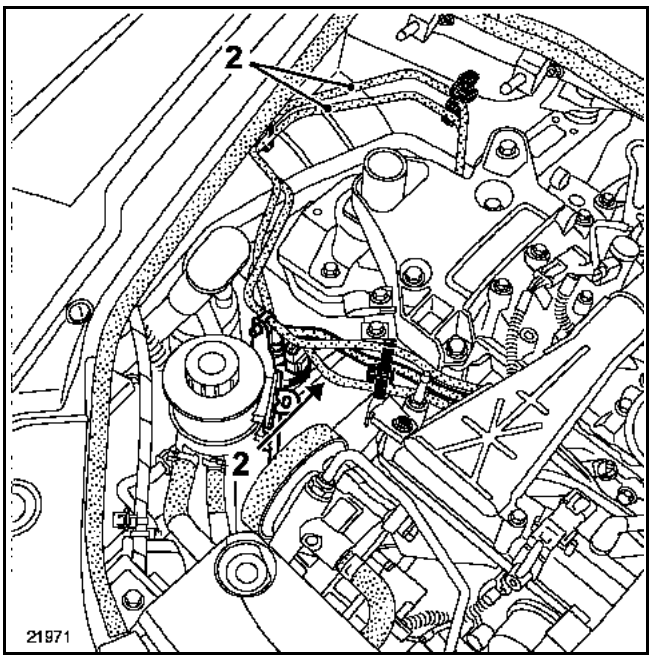

Remove:
– the mounting nut on the evaporator where it meets the scuttle panel,

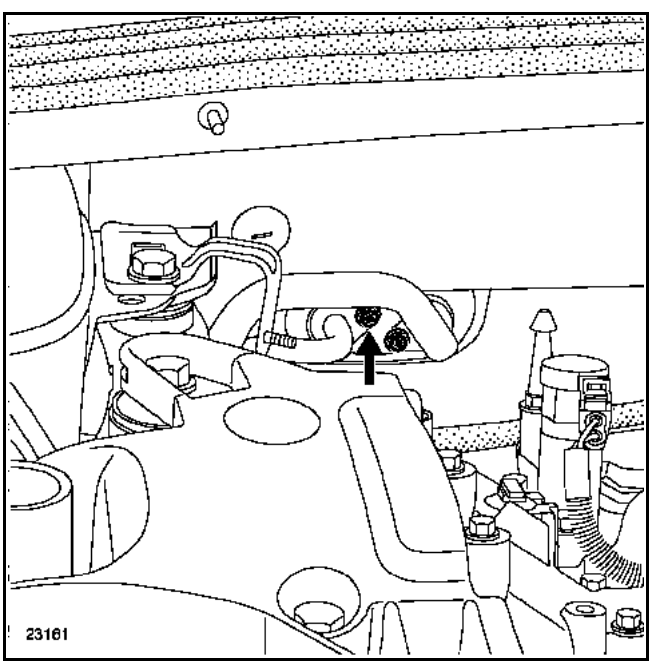

– the hose.

Fit the caps in the ports.

REFITTING

Carry out the removal procedure in reverse.

For the suspended engine mounting and the linkage tightening torques see **section 19D: "Suspended engine mounting"**).

Oil the hose seals with the recommended oil.

When changing a pipe, add **10 ml** of oil or when a pipe bursts (rapid leak), add **100 ml**.

IMPORTANT:
Connect the battery; carry out the necessary programming (see section **8**).

NOTE:
Perform a leak test with the engine running and air conditioning and blower at maximum, and check with a leak detector within 5 minutes after the filling operation.

GETtheMANUALS.org

LOW PRESSURE HOSE BETWEEN THE EVAPORATOR AND THE DEHYDRATION CANISTER

TIGHTENING TORQUES (in daNm)	
Mounting nut at the scuttle panel junction	0.8
Bolt on the dehydration canister	0.8

REMOVAL

Place the vehicle on a lift.

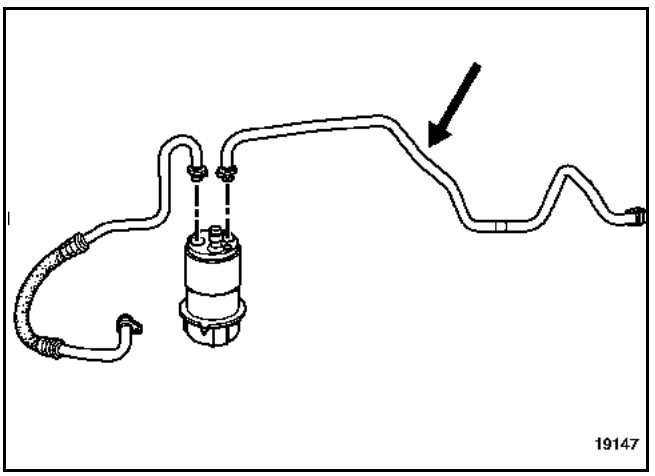

Remove:
– the covers,
– the two heat shields (move only) (see **section 62A: "Evaporator unit"**),

Position engine support tool Mot. 1367-02.

Remove:
– the engine upper tie-bar.
– the suspended mounting cover.

Partially remove the petrol pipes.

Remove:
– the mounting nut on the evaporator where it meets the scuttle panel,
– the bolt on the dehydration canister,
– the hose.

Fit caps on the ports.

REFITTING

Carry out the removal procedure in reverse.

Oil the hose seals with the recommended oil.

When changing a pipe, add **10 ml** of oil or when a pipe bursts (rapid leak), add **100 ml**.

IMPORTANT:
Connect the battery; carry out the necessary programming (see section **8**).

NOTE:
Perform a leak test with the engine running and air conditioning and blower at maximum, and check with a leak detector within 5 minutes after the filling operation.

GETtheMANUALS.org

LOW PRESSURE HOSE BETWEEN THE DEHYDRATION CANISTER AND THE COMPRESSOR

TIGHTENING TORQUES (in daNm)	
Nut on the dehydration canister	0.8
Mounting bolt on the compressor	0.8

REMOVAL

Place the vehicle on a lift.

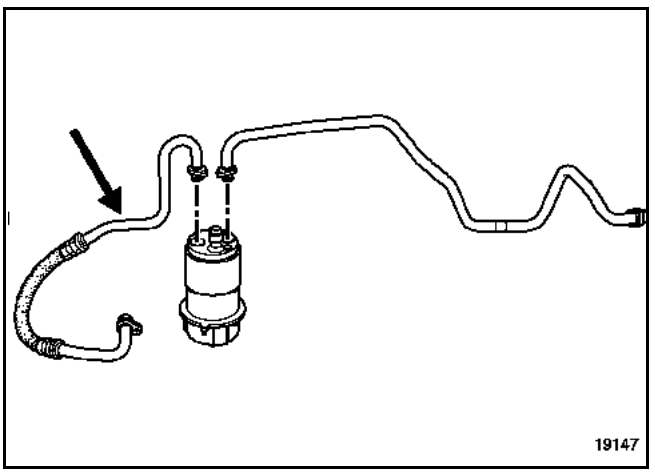

Remove the covers.

Unclip the power assisted steering reservoir.

Remove:
– the mounting nut on the dehydration canister,
– the mounting bolt on the compressor,
– the hose.

Fit caps on the ports.

REFITTING

Carry out the removal procedure in reverse.

Oil the hose seals with the recommended oil.

When changing a pipe, add **10 ml** of oil or when a pipe bursts (rapid leak), add **100 ml**.

IMPORTANT:
Connect the battery; carry out the necessary programming (see section **8**).

NOTE:
Perform a leak test with the engine running and air conditioning and blower at maximum, and check with a leak detector within 5 minutes after the filling operation.

GETtheMANUALS.org

With the vehicle on a two-post lift.

Disconnect the battery.

Drain the **R134a** refrigerant circuit using a filling station.

HIGH PRESSURE HOSE BETWEEN THE COMPRESSOR AND THE CONDENSER

TIGHTENING TORQUES (in daNm)	
Mounting nut on condenser	**0.8**
Bolt on compressor	**0.8**

REMOVAL

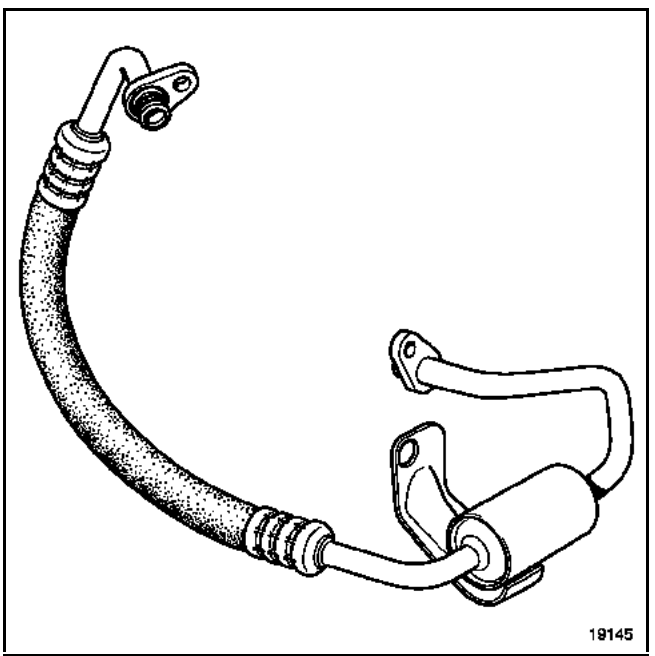

Remove:
- the covers,
- the engine skidplate,
- the front bumper (see **section 55A: "Removing the front bumper"**),
- the mounting nut on the condenser (see **section 62A: Condenser**),
- the bar under the compressor,
- the two mounting bolts on the compressor,
- the hose.

Fit caps on the ports.

REFITTING

Carry out the removal procedure in reverse.

Oil the hose seals with the recommended oil.

When changing a pipe, add **10 ml** of oil or when a pipe bursts (rapid leak), add **100 ml**.

IMPORTANT:
Connect the battery; carry out the necessary programming (see section **8**).

NOTE:
Perform a leak test with the engine running and air conditioning and blower at maximum, and check with a leak detector within 5 minutes after the filling operation.

GETtheMANUALS.org

HIGH PRESSURE HOSE BETWEEN THE CONDENSER AND THE EVAPORATOR

TIGHTENING TORQUES (in daNm)	▽
Mounting nut at the scuttle panel junction	0.8
Bolt on condenser	0.8
Calibrated opening union	2.1

REMOVAL

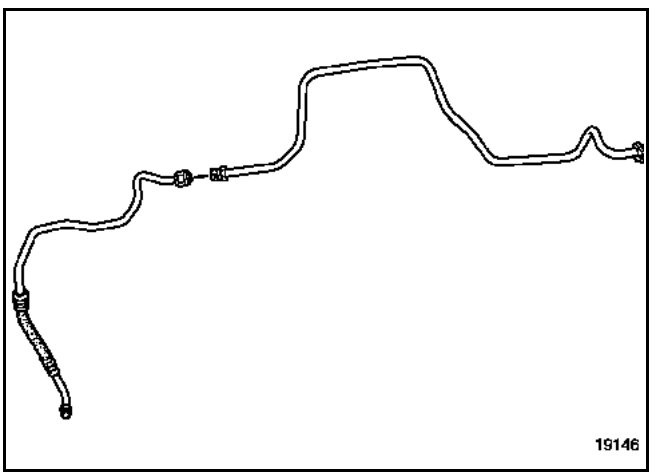

Remove the covers.

Disconnect the power assisted steering reservoir (A).

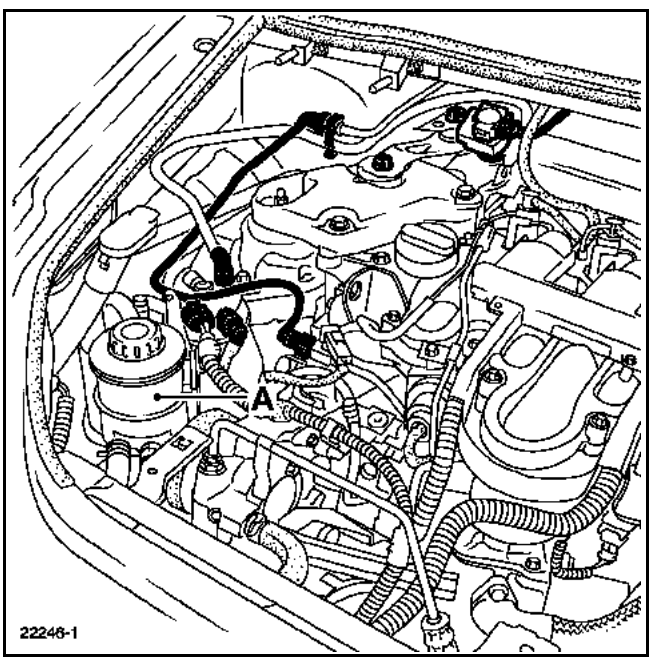

Remove:
– the engine undertray,
– partially, the deflector fixed to the front bumper,

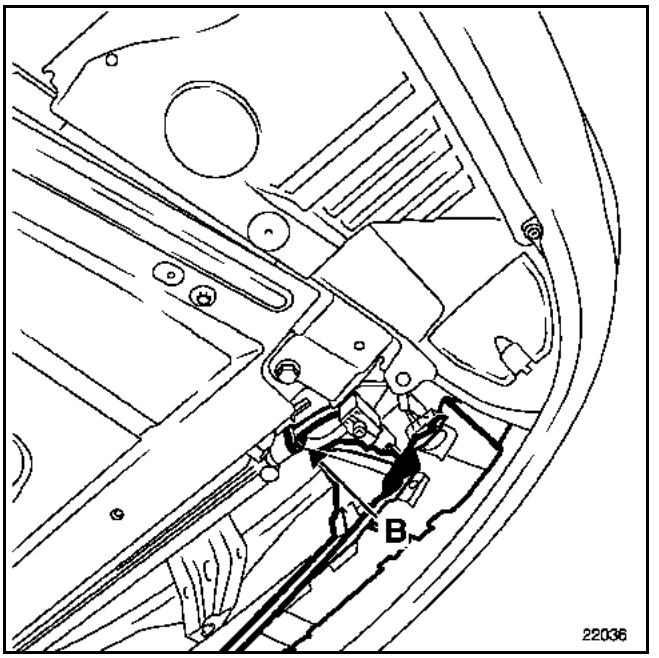

– the mounting nut (B) on the condenser,

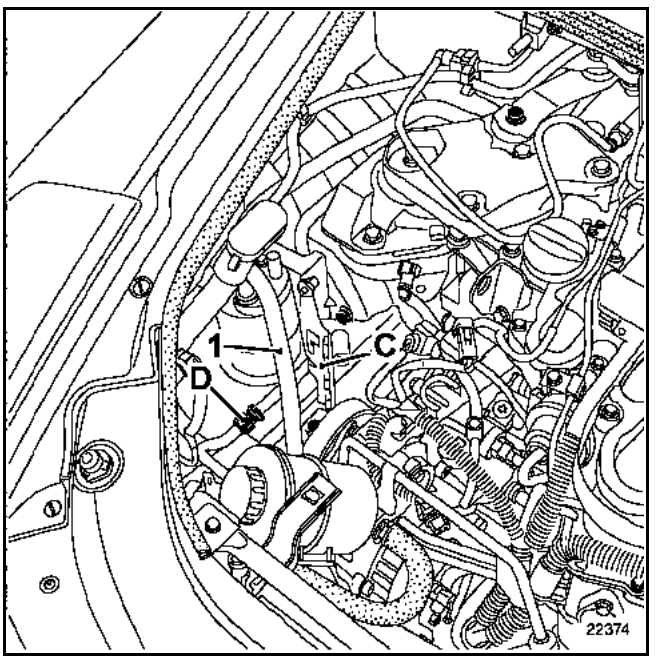

– the power assisted steering reservoir mounting (C),
– the nut on the dehydration canister (1) and remove the pipe on the canister side.

Slacken the union (D).

GETtheMANUALS.org

Remove the engine upper tie-bar (E).

Partially remove the diesel pipes (2).

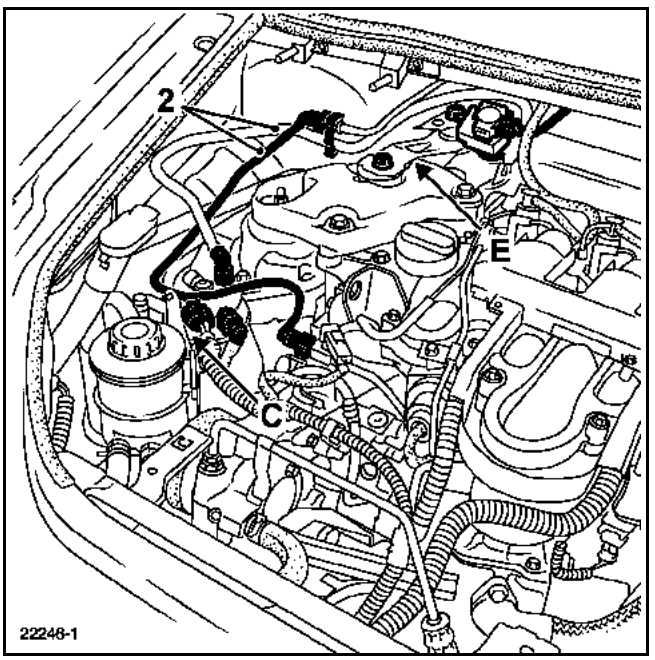

Remove:
– the mounting nut on the evaporator where it meets the scuttle panel,

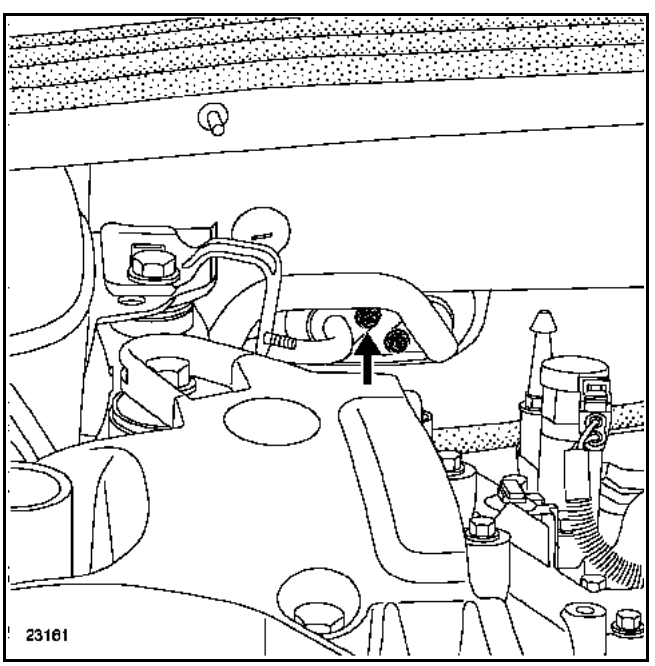

– the hose.

Fit caps on the ports.

REFITTING

Carry out the removal procedure in reverse.

Oil the hose seals with the recommended oil.

When changing a pipe, add **10 ml** of oil or when a pipe bursts (rapid leak), add **100 ml**.

IMPORTANT:
Connect the battery; carry out the necessary programming (see section **8**).

NOTE:
Perform a leak test with the engine running and air conditioning and blower at maximum, and check with a leak detector within 5 minutes after the filling operation.

GETtheMANUALS.org

LOW PRESSURE HOSE BETWEEN THE EVAPORATOR AND THE DEHYDRATION CANISTER

TIGHTENING TORQUES (in daNm)	▽
Mounting nut at the scuttle panel junction	0.8
Bolt on the dehydration canister	0.8

REMOVAL

Place the vehicle on a lift.

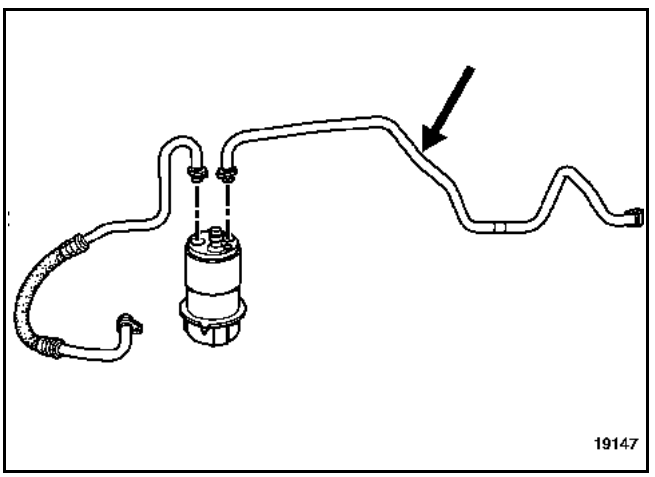

Remove:
– the covers,
– the engine upper tie-bar.

Partially remove the diesel pipes.

Remove:
– the mounting nut on the evaporator where it meets the scuttle panel,
– the bolt on the dehydration canister,
– the hose.

Fit caps on the ports.

REFITTING

Carry out the removal procedure in reverse.

Oil the hose seals with the recommended oil.

When changing a pipe, add **10 ml** of oil or when a pipe bursts (rapid leak), add **100 ml**.

IMPORTANT:
Connect the battery; carry out the necessary programming (see section **8**).

NOTE:
Perform a leak test, with the engine running and with the air conditioning and blower on full, using a leak detector, within 5 minutes after the filling operation.

LOW PRESSURE HOSE BETWEEN THE DEHYDRATION CANISTER AND THE COMPRESSOR

TIGHTENING TORQUES (in daNm)	▽
Nut on the dehydration canister	0.8
Mounting bolt on the compressor	0.8

REMOVAL

Place the vehicle on a lift.

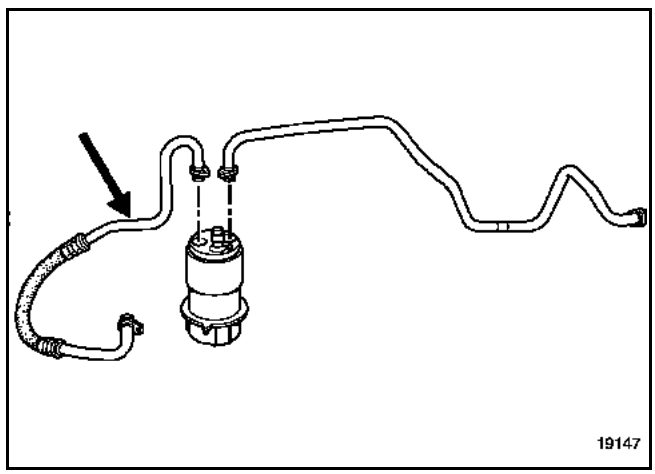

Remove the covers.

Unclip the power assisted steering reservoir.

Remove:
– the mounting nut on the dehydration canister,
– the ski under the engine,
– the mounting bolt on the compressor,
– the hose.

Fit caps on the ports.

REFITTING

Carry out the removal procedure in reverse.

Oil the hose seals with the recommended oil.

When changing a pipe, add **10 ml** of oil or when a pipe bursts (rapid leak), add **100 ml**.

IMPORTANT:
Connect the battery; carry out the necessary programming (see section **8**).

NOTE:
Perform a leak test with the engine running and air conditioning and blower at maximum, and check with a leak detector within 5 minutes after the filling operation.

GETtheMANUALS.org

With the vehicle on a two-post lift.

Disconnect the battery.

Drain the **R134a** refrigerant circuit using a filling station.

HIGH PRESSURE HOSE BETWEEN THE COMPRESSOR AND THE CONDENSER

TIGHTENING TORQUES (in daNm)	▽
Mounting nut on condenser	**0.8**
Bolt on compressor	**0.8**

REMOVAL

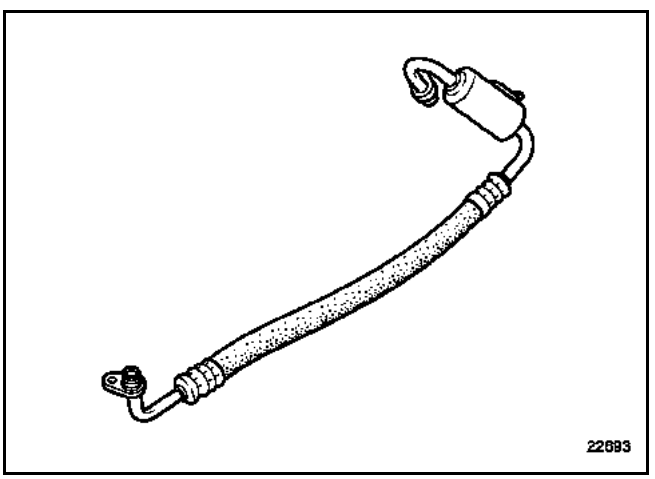

Remove:
– the covers,
– the air inlet tract (see **Section 62A: "Dehydration canister: V4Y engine"**),
– the front bumper (see **Section 55A: "Removing the front bumper"**),
– the mounting nut on the condenser (see **section 62A: Condenser**),
– the mounting bolt on the compressor (see **section 62A: "Compressor: V4Y engine"**),
– the hose.

Fit the caps in the ports.

REFITTING

Carry out the removal procedure in reverse.

Oil the hose seals with the recommended oil.

When changing a pipe, add **10 ml** of oil or when a pipe bursts (rapid leak), add **100 ml**.

IMPORTANT:
Connect the battery; carry out the necessary programming (see section **8**).

NOTE:
Perform a leak test with the engine running and air conditioning and blower at maximum, and check with a leak detector within 5 minutes after the filling operation.

GETtheMANUALS.org

LOW PRESSURE HOSE BETWEEN THE DEHYDRATION CANISTER AND THE COMPRESSOR

TIGHTENING TORQUES (in daNm)	
Nut on the dehydration canister	0.8
Mounting bolt on the compressor	0.8

REMOVAL

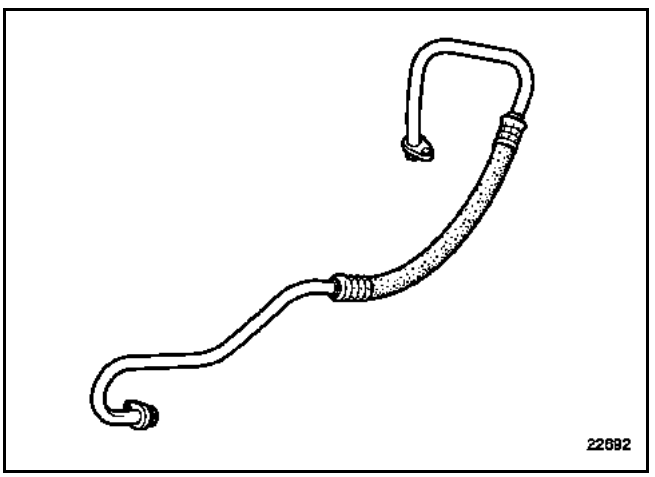

Remove:
– the covers,
– the air inlet tract,
– the air inlet unit (see **section 62A: "Dehydration canister: V4Y engine"**),

Unclip the power assisted steering reservoir.

Remove:
– the mounting nut on the dehydration canister,
– the mounting bolt on the compressor.

Move aside the oxygen sensor electrical harness and the alternator harness **if necessary**.

Remove the hose.

Fit caps on the ports.

REFITTING

Carry out the removal procedure in reverse.

Oil the hose seals with the recommended oil.

When changing a pipe, add **10 ml** of oil or when a pipe bursts (rapid leak), add **100 ml**.

IMPORTANT:
Connect the battery; carry out the necessary programming (see section **8**).

NOTE:
Perform a leak test with the engine running and air conditioning and blower at maximum, and check with a leak detector within 5 minutes after the filling operation.

GETtheMANUALS.org

With the vehicle on a two-post lift.

Disconnect the battery.

Drain the **R134a** refrigerant circuit using a filling station.

HIGH PRESSURE HOSE BETWEEN THE COMPRESSOR AND THE CONDENSER

TIGHTENING TORQUES (in daNm)	
Mounting nut on condenser	**0.8**
Bolt on compressor	**0.8**

REMOVAL

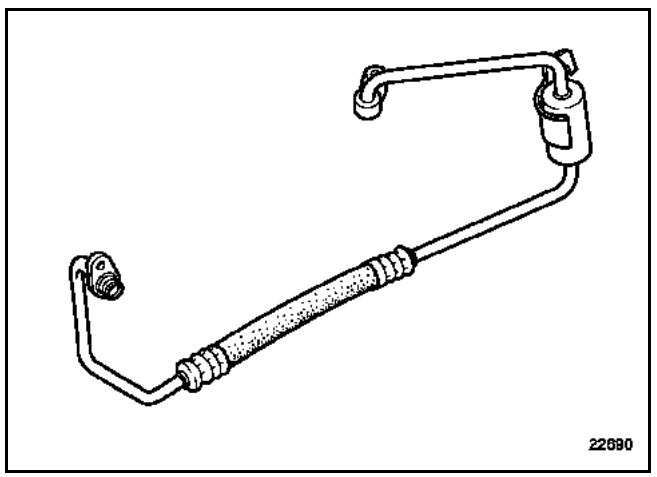

Remove:
- the covers,
- the engine undertray,
- the front bumper (see **section 55A: "Removing the front bumper"**),
- the mounting nut on the condenser (see **section 62A: Condenser**),
- the bar under the compressor,

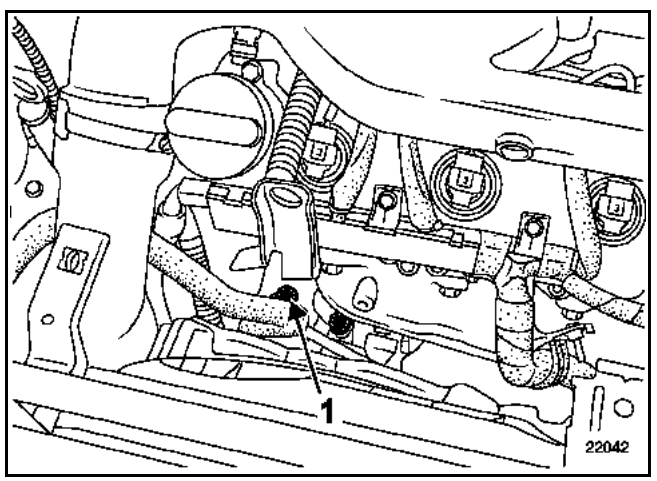

- the mounting bolt (1) on the compressor,

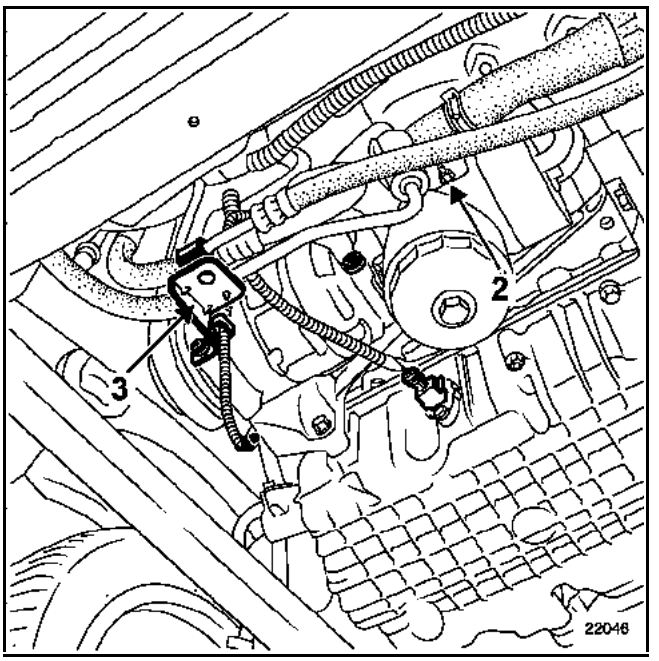

- the nut on the oil filter (2),
- the mounting bracket (3),
- the hose.

Fit caps on the ports.

REFITTING

Carry out the removal procedure in reverse.

Oil the hose seals with the recommended oil.

When changing a pipe, add **10 ml** of oil or when a pipe bursts (rapid leak), add **100 ml**.

IMPORTANT:
Connect the battery; carry out the necessary programming (see section **8**).

NOTE:
Perform a leak test with the engine running and air conditioning and blower at maximum, and check with a leak detector within 5 minutes after the filling operation.

GETtheMANUALS.org

HIGH PRESSURE HOSE BETWEEN THE CONDENSER AND THE EVAPORATOR

TIGHTENING TORQUES (in daNm)	
Mounting nut at the scuttle panel junction	0.8
Bolt on condenser	0.8
Calibrated opening union	2.1

REMOVAL

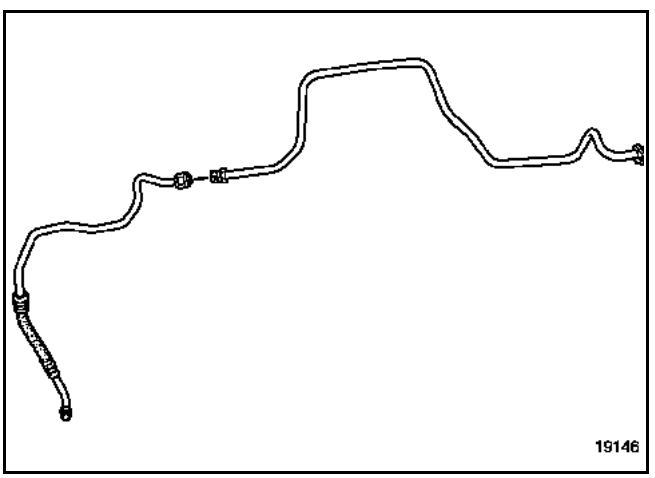

Remove the covers.

Disconnect the power assisted steering reservoir (A).

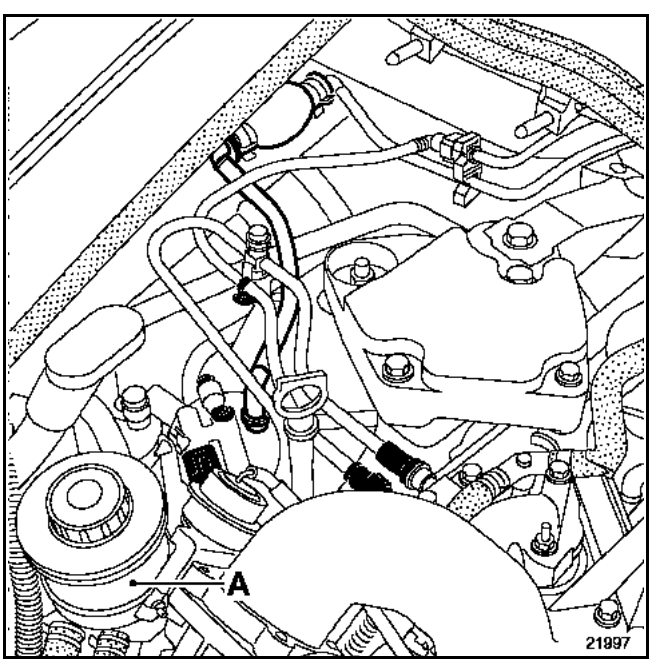

Remove:
– partially, the skidplate fixed to the front bumper,

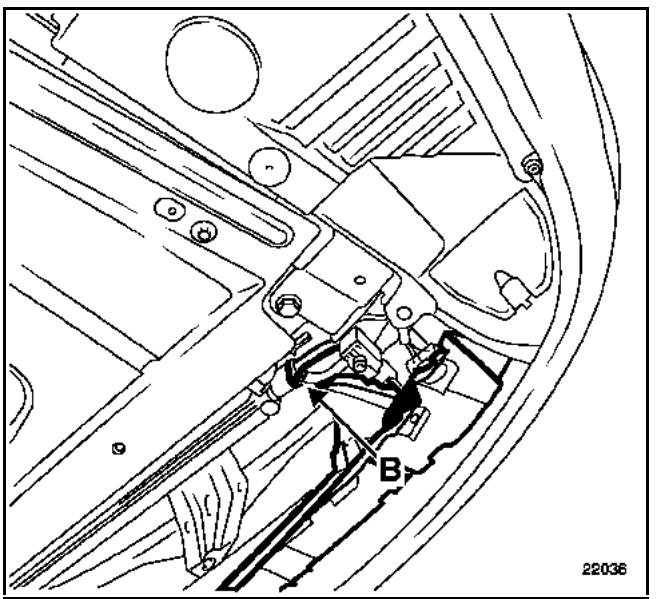

– the mounting nut (B) on the condenser,

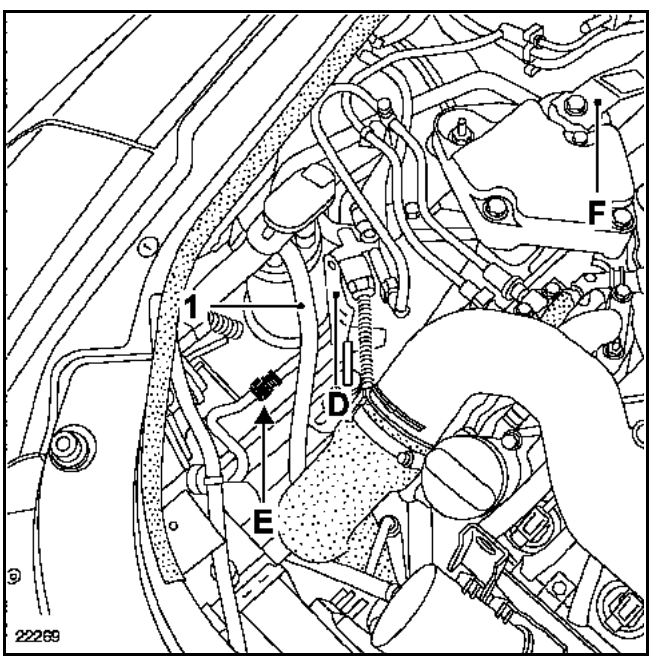

– the power assisted steering reservoir mounting (D),
– the nut on the dehydration canister (1) and remove the pipe on the canister side.

Slacken the union (E).

Remove the engine upper tie-bar (F).

GETtheMANUALS.org

Partially remove the diesel pipes (2).

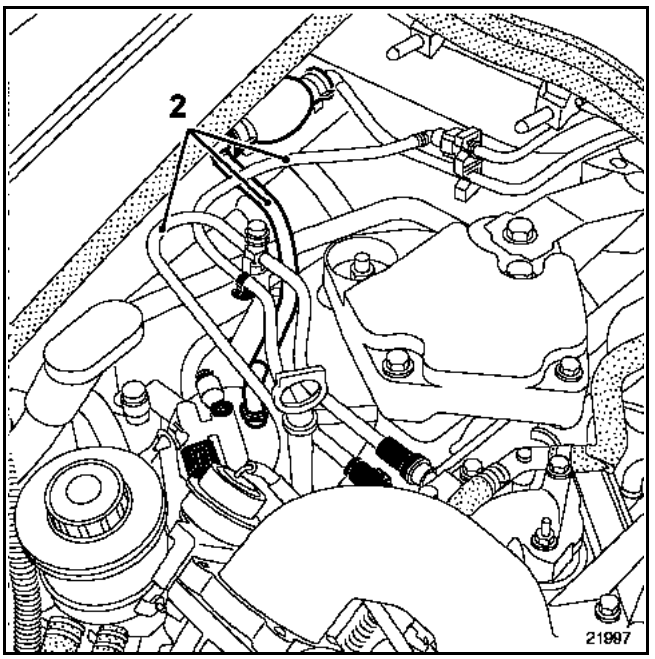

Remove:
– the mounting nut on the evaporator where it meets the scuttle panel,

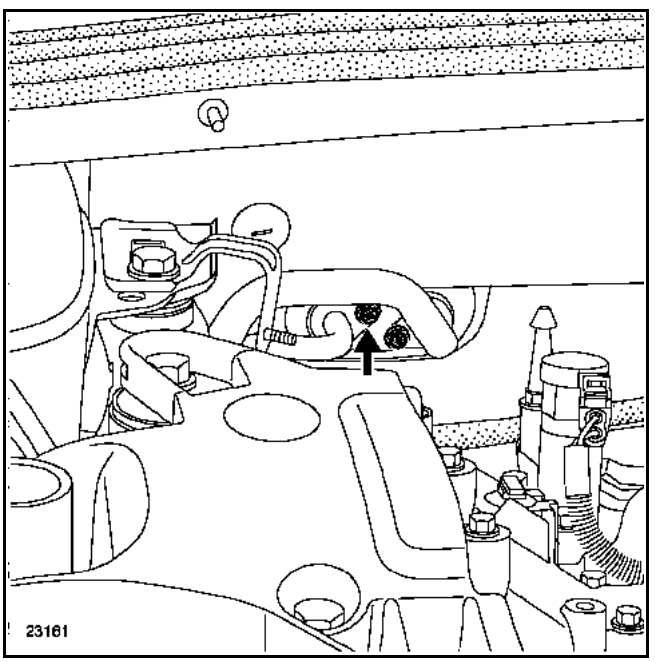

– the hose.

Fit caps on the ports.

REFITTING

Carry out the removal procedure in reverse.

Oil the hose seals with the recommended oil.

When changing a pipe, add **10 ml** of oil or when a pipe bursts (rapid leak), add **100 ml**.

IMPORTANT:
Connect the battery; carry out the necessary programming (see section **8**).

NOTE:
Perform a leak test with the engine running and air conditioning and blower at maximum, and check with a leak detector within 5 minutes after the filling operation.

GETtheMANUALS.org

LOW PRESSURE HOSE BETWEEN THE EVAPORATOR AND THE DEHYDRATION CANISTER

TIGHTENING TORQUES (in daNm)	
Mounting nut at the scuttle panel junction	0.8
Bolt on the dehydration canister	0.8

REMOVAL

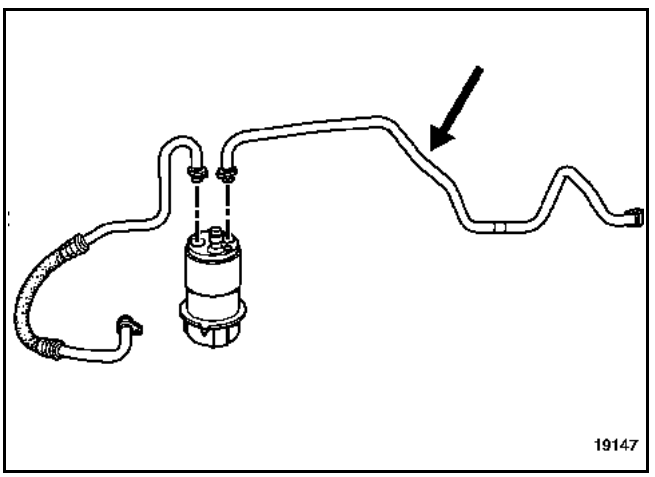

Remove:
– the covers,
– the engine upper tie-bar.
– the suspended mounting cover.

Partially remove the diesel pipes.

Remove:
– the mounting nut on the evaporator where it meets the scuttle panel,
– the bolt on the dehydration canister,
– the hose.

Fit caps on the ports.

REFITTING

Carry out the removal procedure in reverse.

Oil the hose seals with the recommended oil.

When changing a pipe, add **10 ml** of oil or when a pipe bursts (rapid leak), add **100 ml**.

IMPORTANT:
Connect the battery; carry out the necessary programming (see section **8**).

NOTE:
Perform a leak test with the engine running and air conditioning and blower at maximum, and check with a leak detector within 5 minutes after the filling operation.

GETtheMANUALS.org

LOW PRESSURE HOSE BETWEEN THE DEHYDRATION CANISTER AND THE COMPRESSOR

TIGHTENING TORQUES (in daNm)	
Nut on the dehydration canister	0.8
Mounting bolt on condenser	0.8

REMOVAL

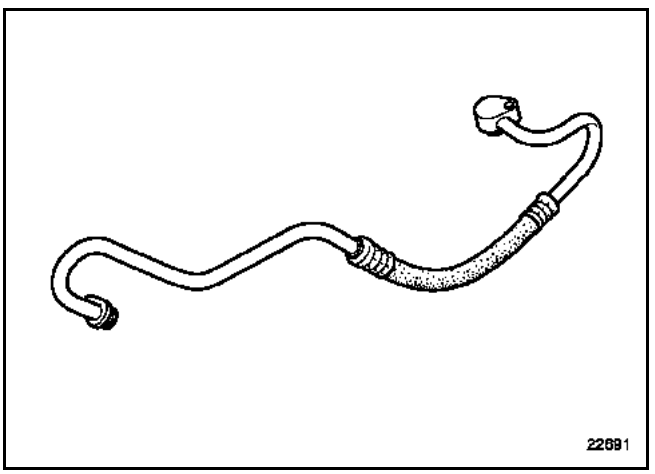

Remove the covers.

Unclip the power assisted steering reservoir.

Remove:
– the mounting nut on the dehydration canister,
– the mounting bolt on the compressor,
– the hose.

Fit caps on the ports.

REFITTING

Carry out the removal procedure in reverse.

Oil the hose seals with the recommended oil.

When changing a pipe, add **10 ml** of oil or when a pipe bursts (rapid leak), add **100 ml**.

IMPORTANT:
Connect the battery; carry out the necessary programming (see section **8**).

NOTE:
Perform a leak test with the engine running and air conditioning and blower at maximum, and check with a leak detector within 5 minutes after the filling operation.

GETtheMANUALS.org

TIGHTENING TORQUE (in daNm)	
Pressure sensor	0.9

REMOVAL

Place the vehicle on a lift.

Remove the four front engine cover mounting bolts.

Move the front engine cover to one side.

Disconnect the pressure sensor connection then remove the pressure sensor.

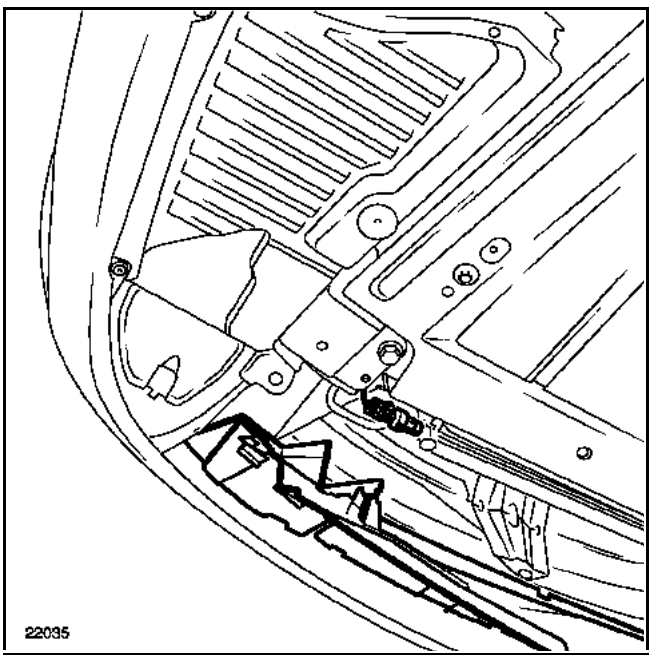

The pressure sensor fitted at the condenser output protects the refrigerant circuit.

– Low-pressure cut-off: **2 bar**

– High-pressure cut-off: **27 bar**

It informs the injection computer of the pressure in the refrigerant circuit.

The injection computer controls the engine cooling blowers depending on the high pressure in the refrigerant circuit and the vehicle speed.

The pressostat switch can be removed without draining the refrigerant circuit.

An automatic shut-off valve isolates the circuit from the environment when the switch is removed.

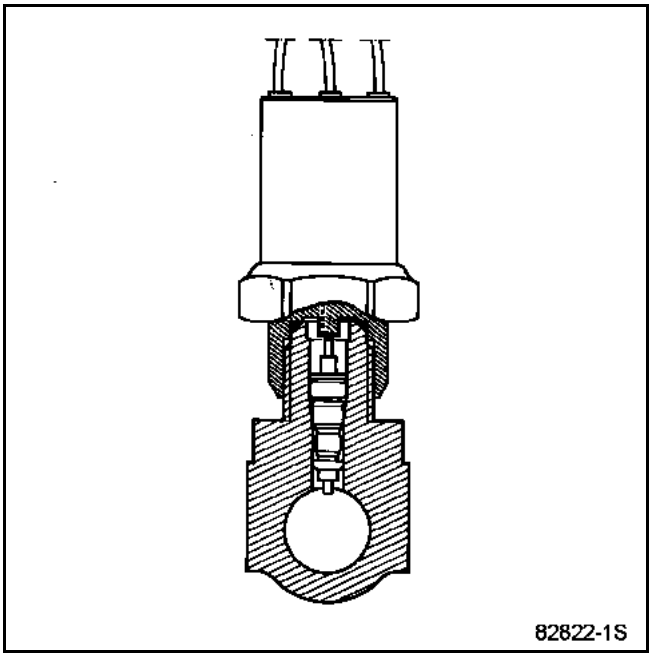

REFITTING

Refit in reverse order to removal.

Replace the seal if it is damaged, protecting the pressure sensor end piece filter to avoid damaging the seal during fitting.

Oil the seal with the recommended oil.

IMPORTANT:
Connect the battery; carry out the necessary programming (see section **8**).

NOTE:
Perform a leak test with the engine running and air conditioning and blower at maximum, and check with a leak detector within 5 minutes after the filling operation.

GETtheMANUALS.org

TIGHTENING TORQUE (in daNm)	
Pressure sensor	0.9

REMOVAL

Disconnect the battery.

Drain the refrigerant circuit using the filling station.

Remove:
– the engine undertray,
– part of the wheel arch liners.

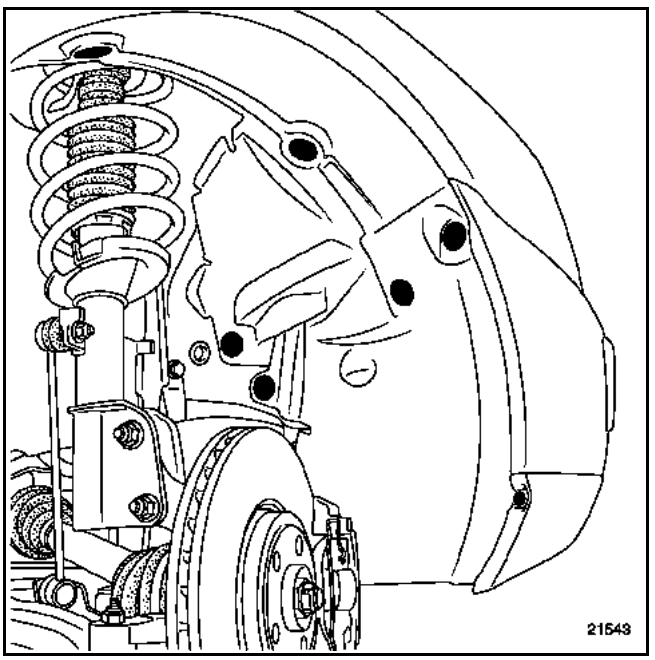

Disconnect the fog light supply connectors (A) (if fog lights fitted).

Remove the two side mounting bolts (B).

Partially detach the bumper.

Disconnect the supply to the headlight washer jets (if fitted).

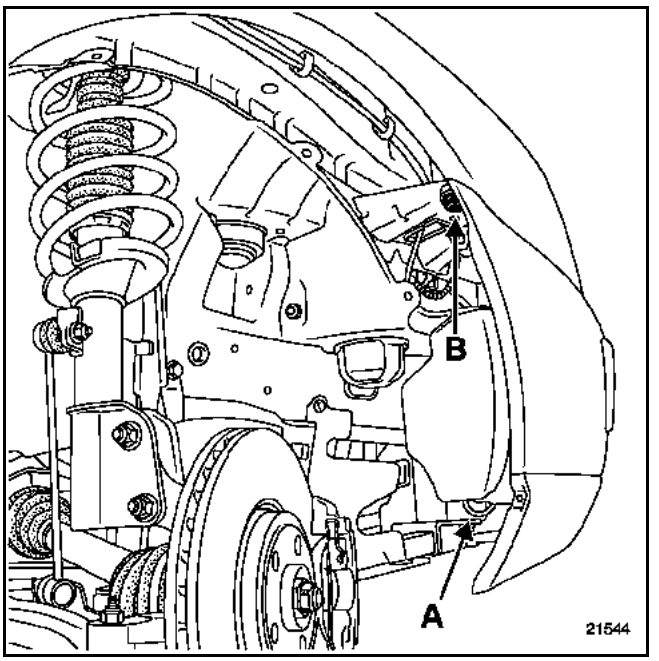

Remove the bumper/grille assembly (this operation requires two people).

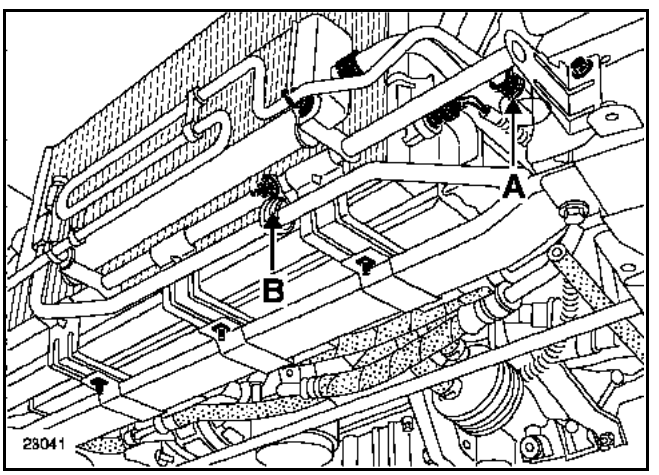

Remove:
– the bumper/grille assembly (this operation requires two people),
– the radar (see section concerned),
– the pressure sensor connections,
– the clip (A) and (B).

Separate the oil radiator from its mounting without removing it and leave it suspended.

GETtheMANUALS.org

Remove:
– the radiator mounting attachments at (C) in order to move it,
– the pressure sensor.

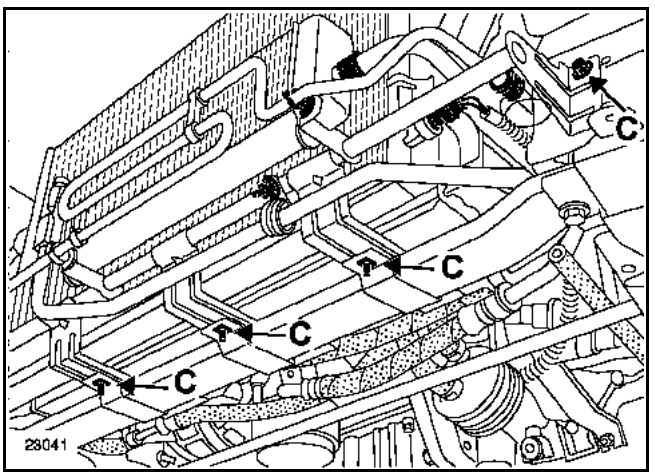

The pressure sensor fitted at the condenser output protects the refrigerant circuit.

– Low-pressure cut-off: **2 bar**

– High-pressure cut-off: **27 bar**

It informs the injection computer of the pressure in the refrigerant circuit.

The injection computer controls the engine cooling fans depending on the high pressure in the refrigerant circuit and the vehicle speed.

The pressostat switch can be removed without draining the refrigerant circuit.

An automatic shut-off valve isolates the circuit from the environment when the switch is removed.

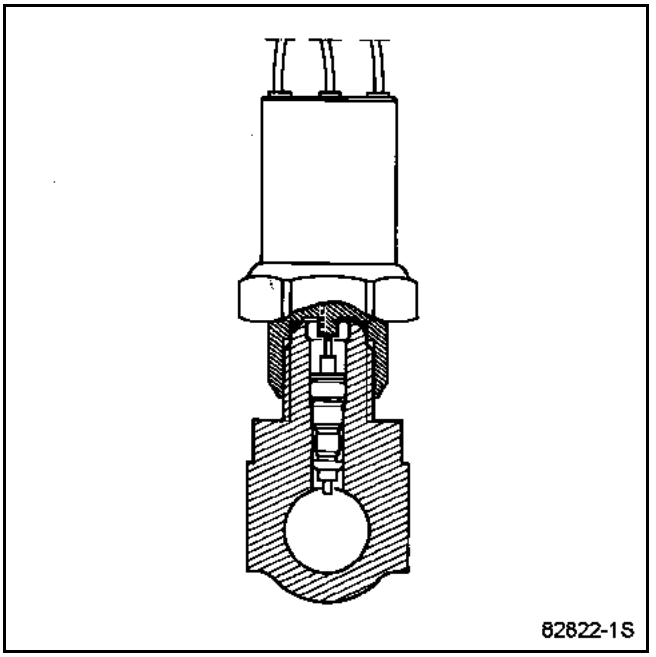

REFITTING

Refit in reverse order to removal.

Replace the seal if it is damaged, protecting the pressure sensor end piece filter to avoid damaging the seal during fitting.

Oil the seal with the recommended oil.

IMPORTANT:
Connect the battery; carry out the necessary programming (see section **8**).

NOTE:
Perform a leak test with the engine running and air conditioning and blower at maximum, and check with a leak detector within 5 minutes after the filling operation.

GETtheMANUALS.org

SPEED VARIATION MODULE

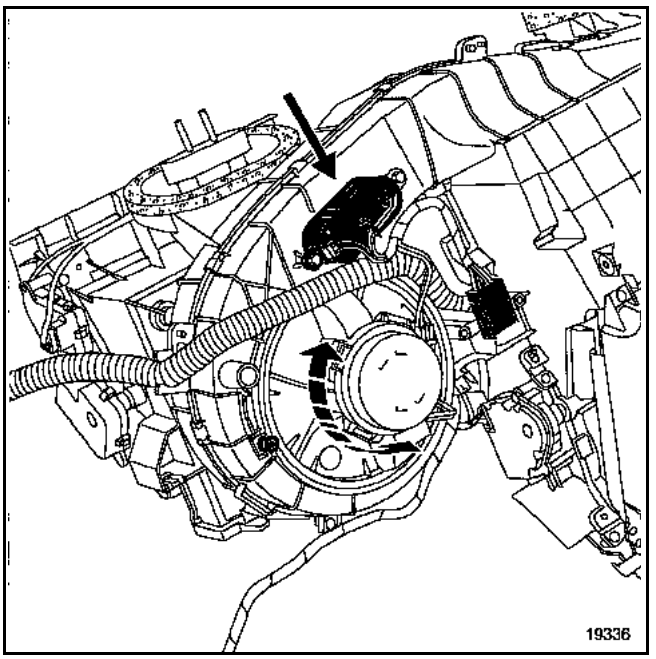

The speed variation module controls the speed of the blower depending on the requirements determined by the automatic control.

It can be accessed from underneath the instrument panel.

REMOVAL

Remove:
– the protective cover under the instrument panel,
– the two mounting bolts under the instrument panel,
– the speed variation module.

REFITTING

Carry out the removal procedure in reverse.

GETtheMANUALS.org

SPEED VARIATION MODULE

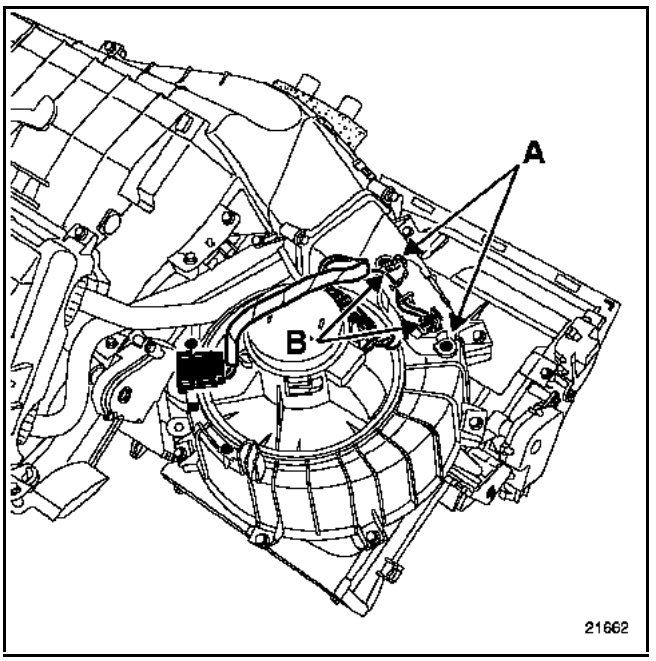

The speed variation module controls the speed of the blower depending on the requirements determined by the automatic control.

It can be accessed from underneath the instrument panel.

REMOVAL

Remove:
– the braking sensor by turning it a quarter turn,
– the two power module mounting bolts (A),
– the speed variation module.

Disconnect the two power module connections (B).

REFITTING

Carry out the removal procedure in reverse.

NOTE:
Do not forget to refit the braking sensor on its mounting.

GETtheMANUALS.org

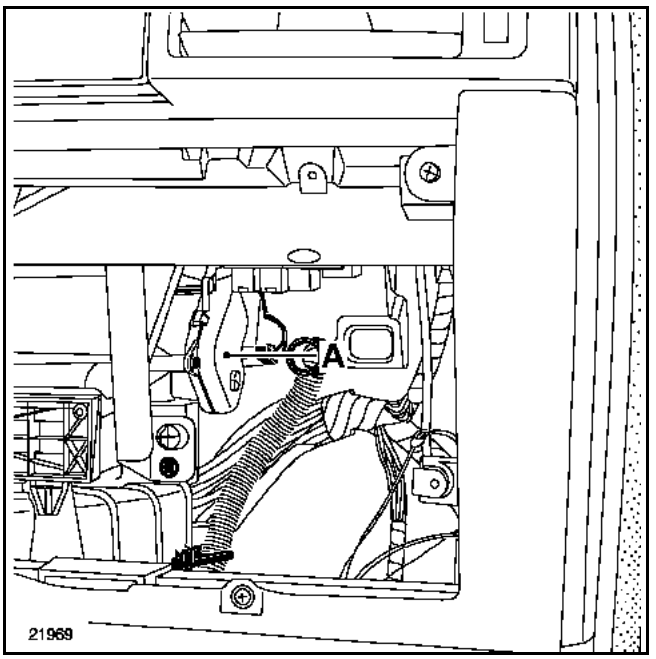

The recycling motor positions the air intake flap depending on the requirements determined by automatic control or the user.

The recycling motor is accessible after removing the glovebox (see "**Method for removing passenger compartment filter"**).

REMOVAL

Disconnect the connections.

Remove:
– the two recirculation motor, mounting bolts,
– the recirculation motor (A).

REFITTING

Carry out the removal procedure in reverse.

GETtheMANUALS.org

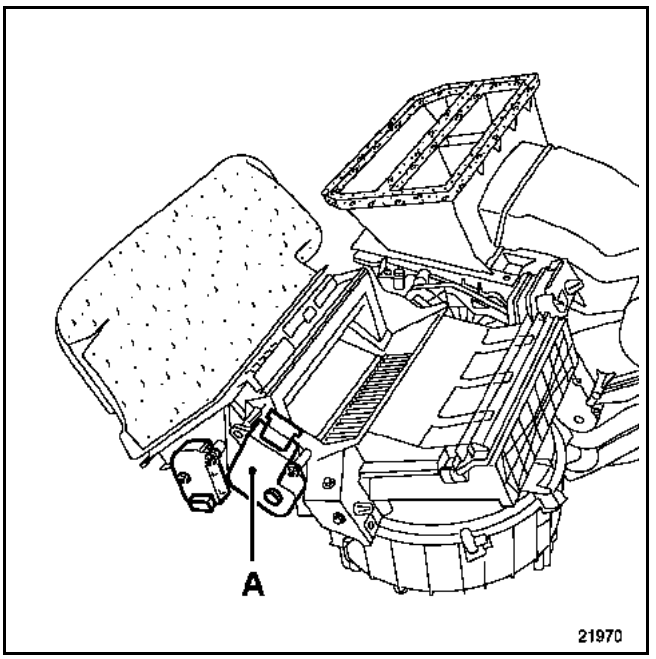

The recycling motor positions the air intake flap depending on the requirements determined by automatic control or the user.

REMOVAL

Remove:
– the glovebox (see **section 62A: "Removing the passenger compartment filter"**),
– the two recirculation motor, mounting bolts,
– the recirculation motor (A).

Disconnect the connections.

REFITTING

Carry out the removal procedure in reverse.

GETtheMANUALS.org

LEFT-HAND MIXER MOTOR

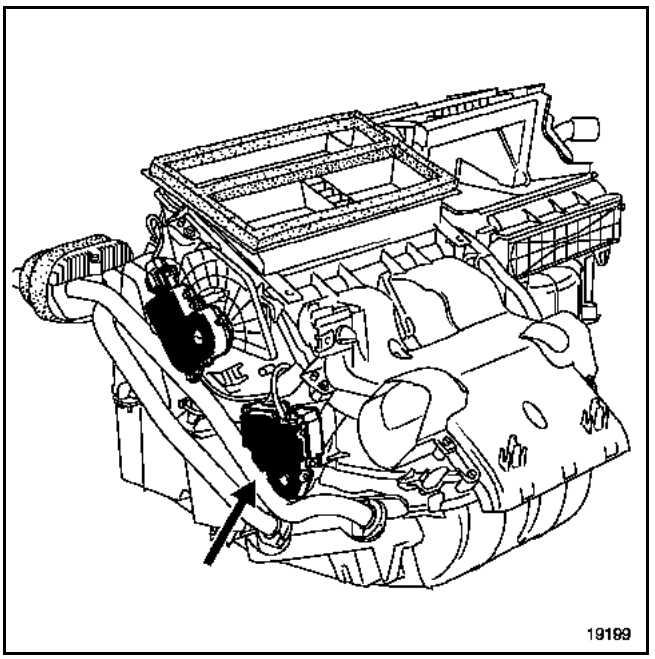

The mixing motor positions the air mixing flap depending on the requirements determined by automatic control.

TIGHTENING TORQUE (in daNm)	▽
Reinforcing plate nuts	2.1
Reinforcing plate bolts	2.1

REMOVAL

Remove:
– the trim,

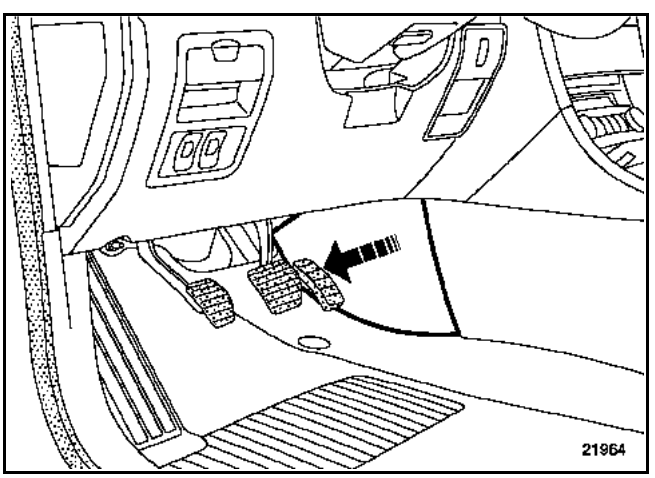

– the four bolts of the beam reinforcement retaining plate.

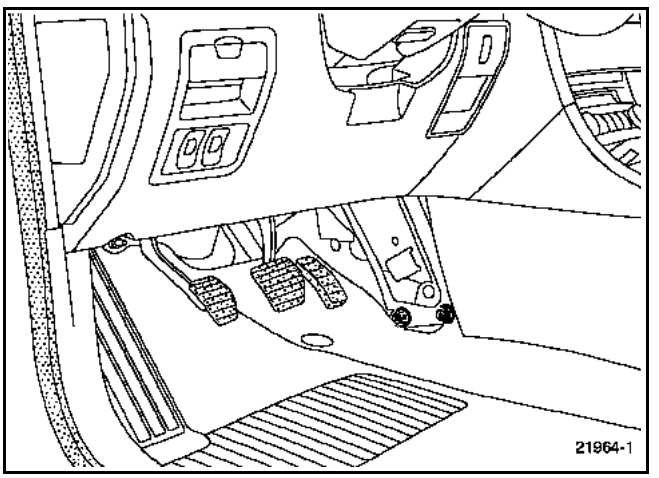

Disconnect the connections.

Remove:
– the two mounting bolts of the mixer motor,
– the mixer motor.

REFITTING

Carry out the removal procedure in reverse.

GETtheMANUALS.org

LEFT-HAND MIXER MOTOR

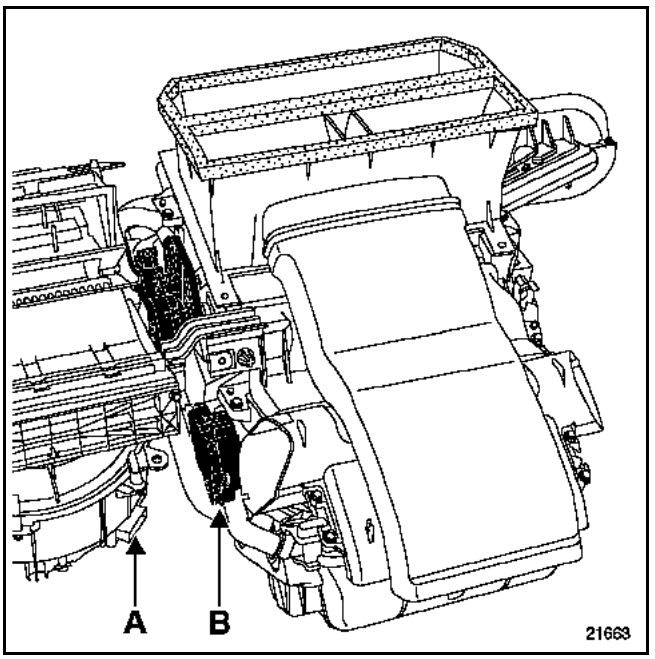

The mixing motor positions the air mixing flap depending on the requirements determined by automatic control.

REMOVAL

Remove the trim.

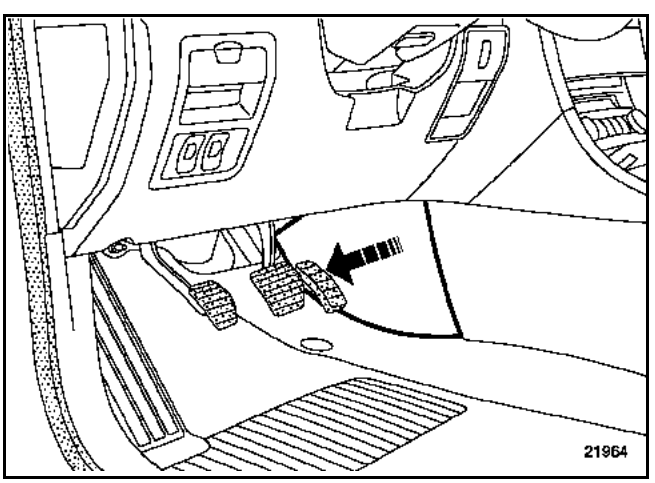

Disconnect the connections (A) of the fan assembly.

Remove:
– the two mounting bolts of the mixer motor,
– mixer motor (B),
– the mixer motor connections.

REFITTING

Carry out the removal procedure in reverse.

NOTE:
Remember to connect the connections (A).

GETtheMANUALS.org

RIGHT-HAND MIXER MOTOR

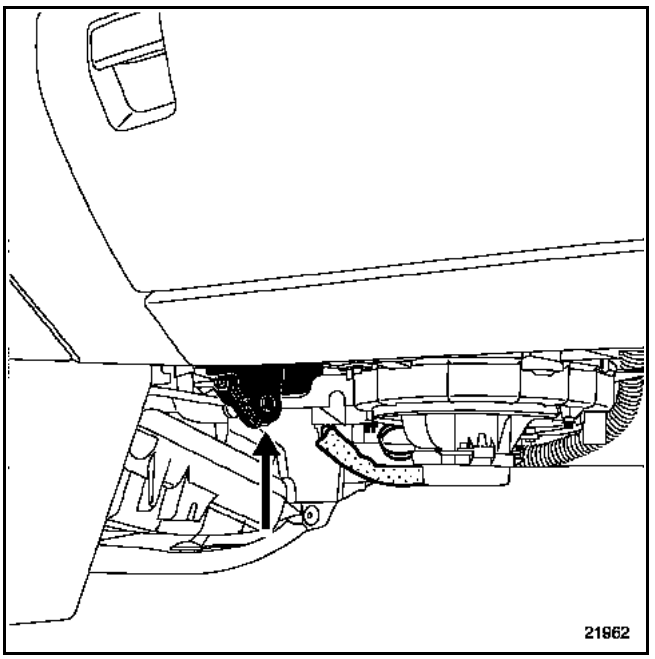

The mixing motor positions the air mixing flap depending on the requirements determined by automatic control.

REMOVAL

Remove the trim.

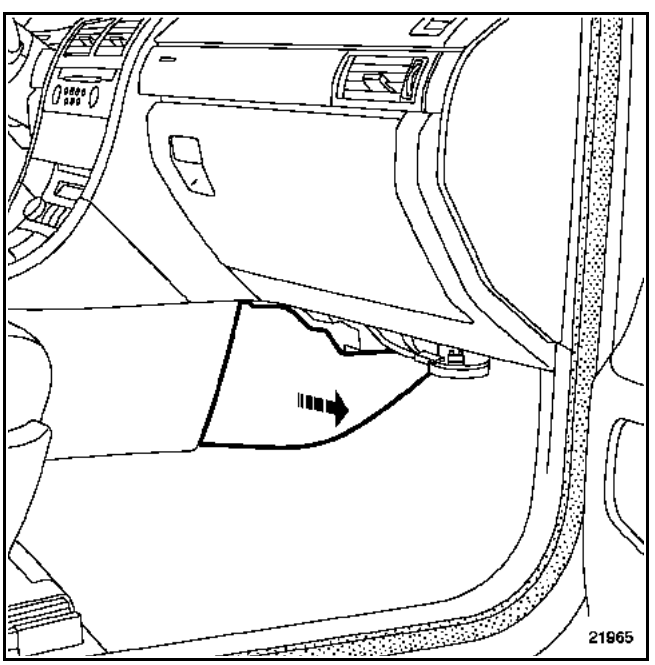

Remove:
– the two mounting bolts of the mixer motor,
– the mixer motor.

Disconnect the connections.

REFITTING

Carry out the removal procedure in reverse.

GETtheMANUALS.org

RIGHT-HAND MIXER MOTOR

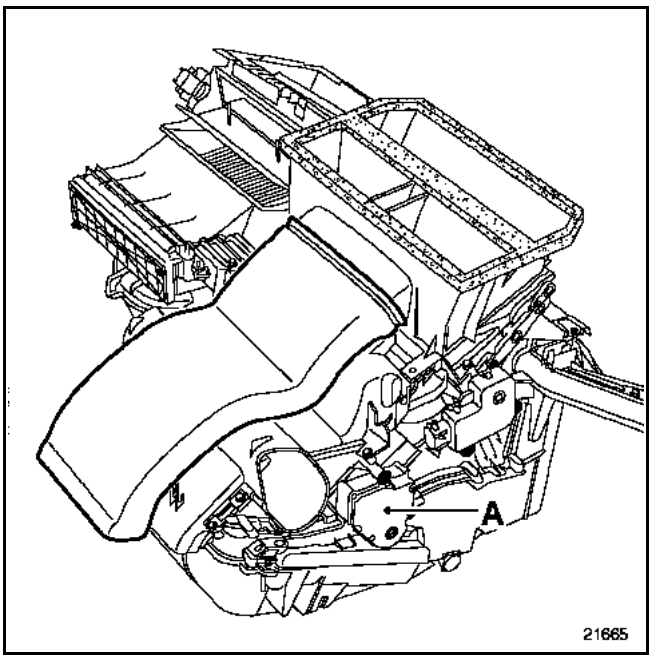

The mixing motor positions the air mixing flap depending on the requirements determined by automatic control.

This operation is performed without removing the instrument panel.

TIGHTENING TORQUE (in daNm)	▽
Reinforcing plate nuts	2.1
Reinforcing plate bolts	2.1

REMOVAL

Remove the trim.

Move the carpet to one side to remove the reinforcement plate.

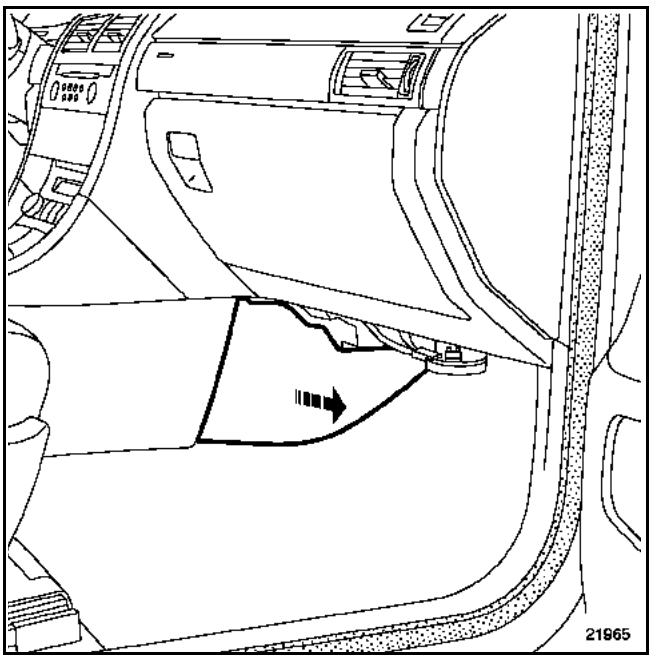

Remove:
– the electrical harness on the plate (location B),
– the four bolts of the beam reinforcement plate.

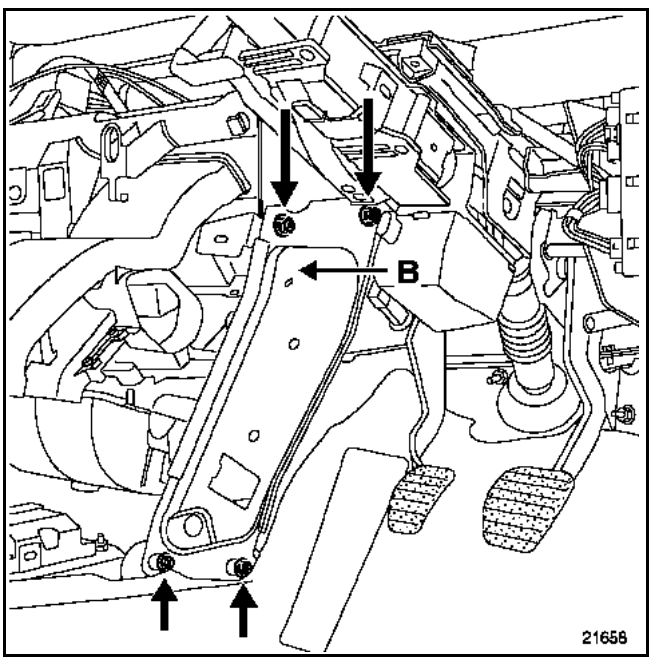

Remove the reinforcement plate.

Remove:
– the two mounting bolts of the mixer motor,
– mixer motor (A).

Disconnect the connections.

REFITTING

Carry out the removal procedure in reverse.

GETtheMANUALS.org

DE-ICING DISTRIBUTION MOTOR

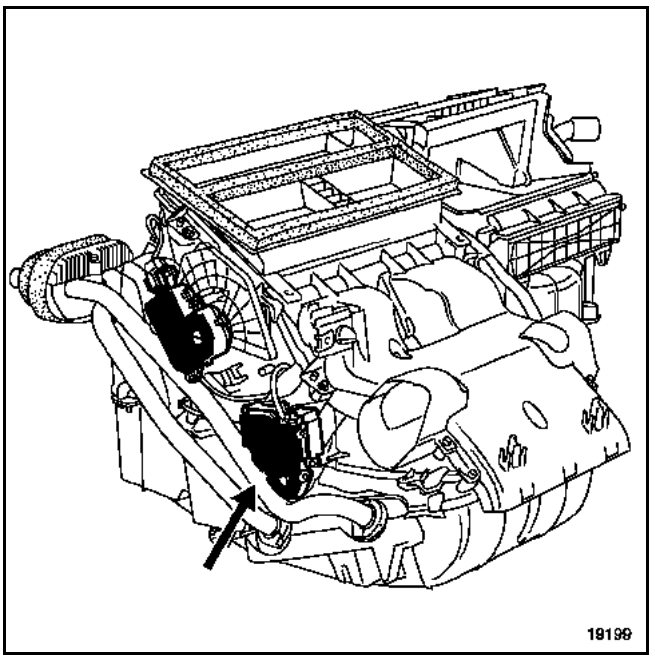

The distribution motor positions the de-icing flap depending on the requirements determined by the automatic control.

The air distribution motor can be accessed after removing the beam (see **method for removing the evaporator**).

REMOVAL

Disconnect the connections.

Remove:
– the two mounting bolts of the distribution motor,
– the distribution motor.

REFITTING

Carry out the removal procedure in reverse.

FOOT WELL DISTRIBUTION MOTOR/VENTILATION

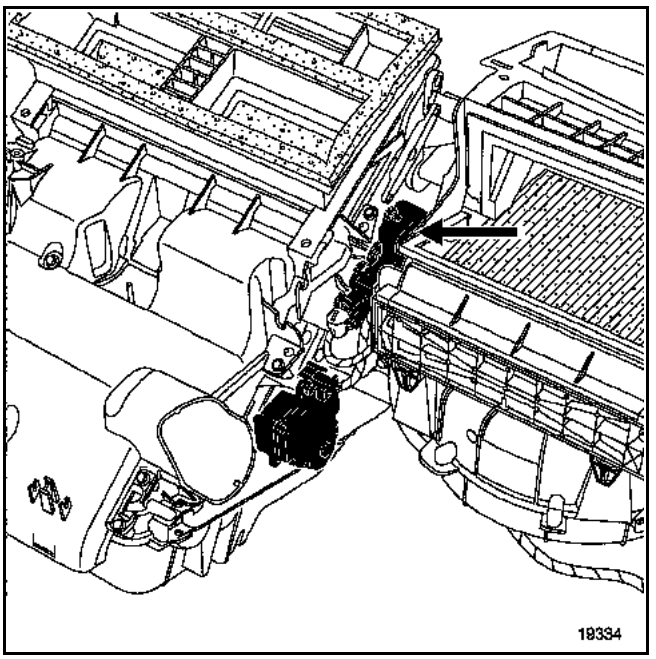

The distribution motor positions the distribution flap depending on the requirements determined by the automatic control.

The air distribution motor can be accessed after removing the beam (see **method for removing the evaporator**).

REMOVAL

Disconnect the connections.

Remove:
– the two mounting bolts of the air distribution motor,
– the air distribution motor.

REFITTING

Carry out the removal procedure in reverse.

GETtheMANUALS.org

DE-ICING DISTRIBUTION MOTOR

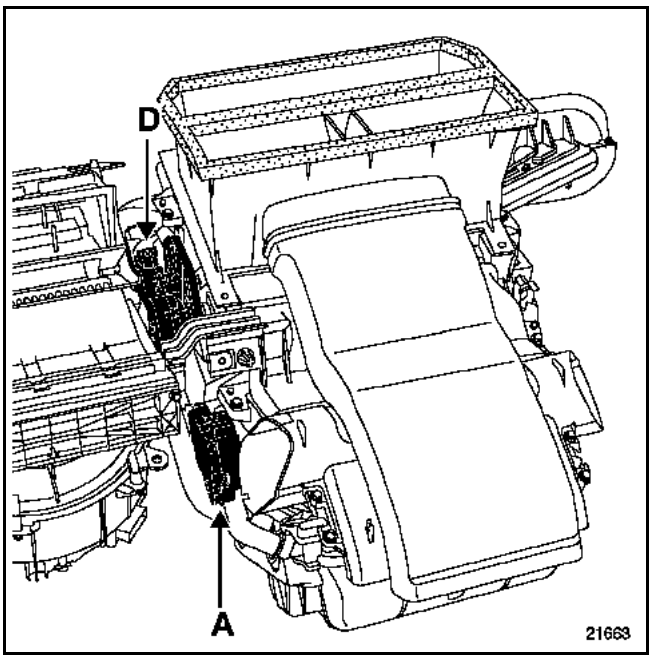

The distribution motor positions the de-icing flap depending on the requirements determined by the automatic control.

REMOVAL

Remove:
– the glovebox (see **section 62: "Removing the passenger compartment filter"**),
– the left-hand side cover,
– mixer motor (A).

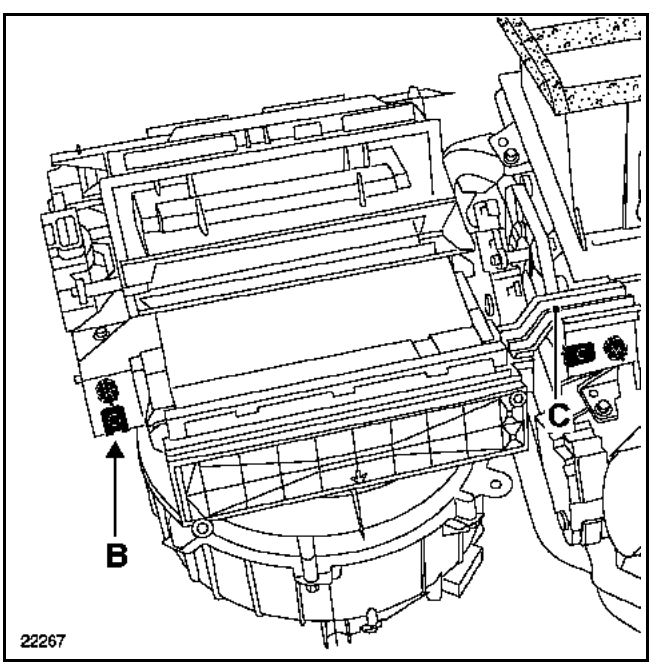

– bolt (B) of the filter unit on the reinforcement beam,
– strengthening bracket (C).

Move the filter unit back slightly.

Remove:
– the two mounting bolts of the distribution motor,
– air distribution motor (D).

Disconnect the connections.

REFITTING

Carry out the removal procedure in reverse.

GETtheMANUALS.org

FOOT WELL AIR DISTRIBUTION MOTOR/ VENTILATION

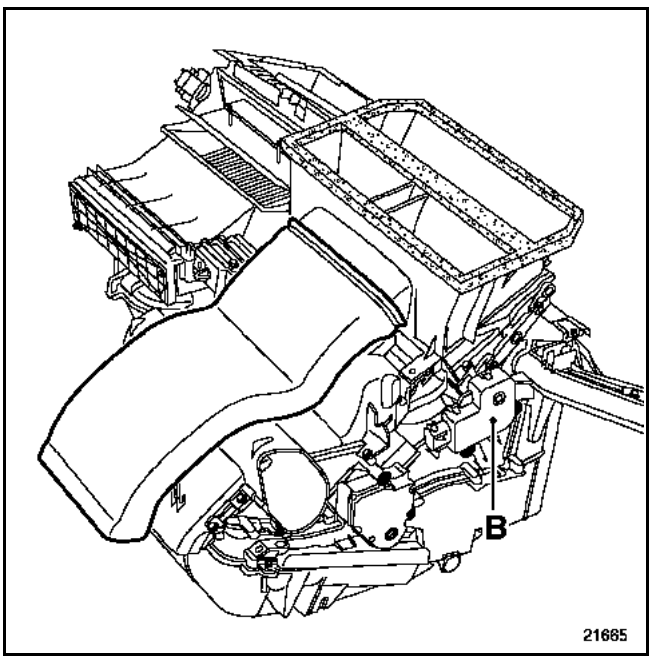

The distribution motor positions the distribution flap depending on the requirements determined by the automatic control.

This operation is performed without removing the instrument panel.

TIGHTENING TORQUE (in daNm)	
Reinforcing plate nuts	**2.1**
Reinforcing plate bolts	**2.1**

REMOVAL

Remove the trim.

Move the carpet to one side to remove the reinforcement plate.

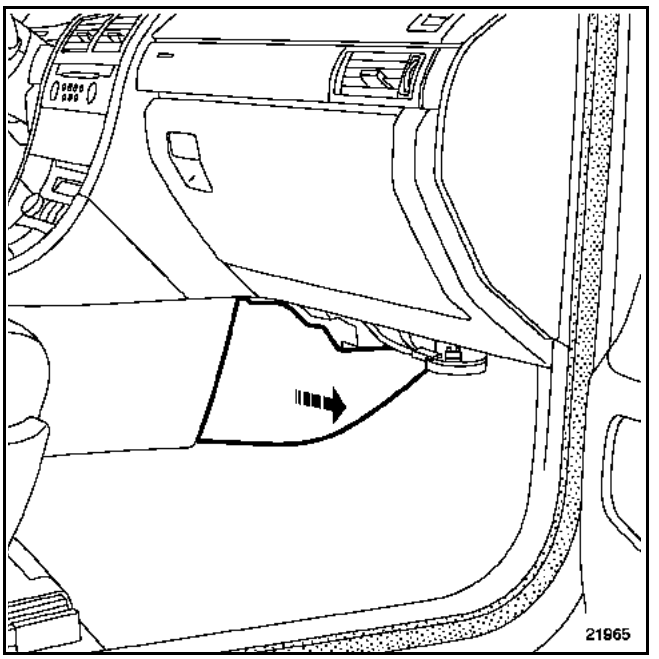

Remove:
– the electrical harness on the plate (location A),
– the four reinforcement retaining bolts.

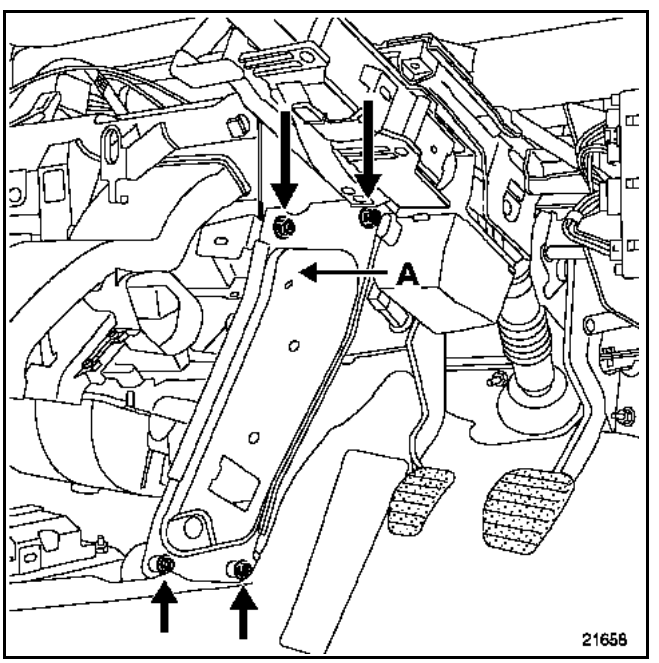

Disconnect the connections.

Remove:
– the two mounting bolts of the air distribution motor,
– the air distribution motor.

REFITTING

Carry out the removal procedure in reverse.

GETtheMANUALS.org

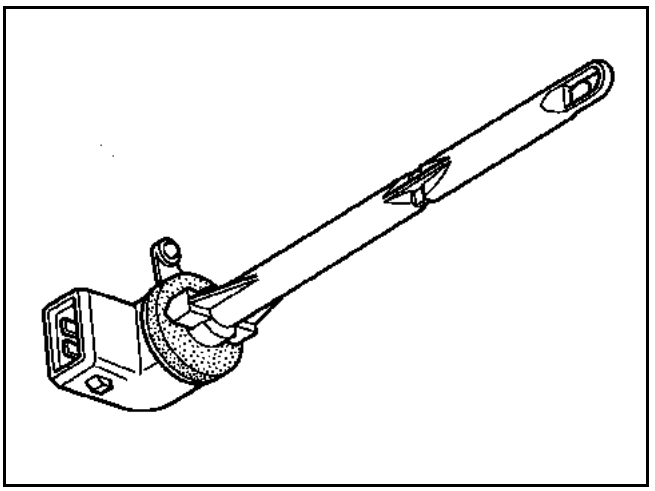

The evaporator sensor provides information about the air temperature at the evaporator outlet.

It is a negative temperature coefficient thermistor.

TIGHTENING TORQUE (in daNm)	▽
Reinforcing plate nuts	2.1
Reinforcing plate bolts	2.1

REMOVAL

Remove:
– the trim,

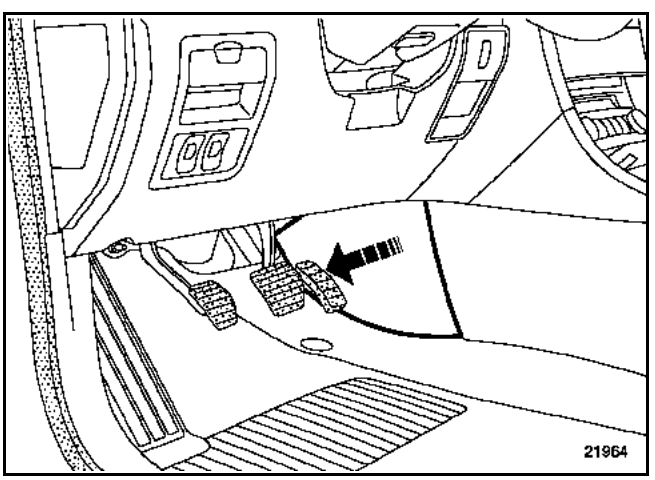

– the four reinforcement retaining bolts.

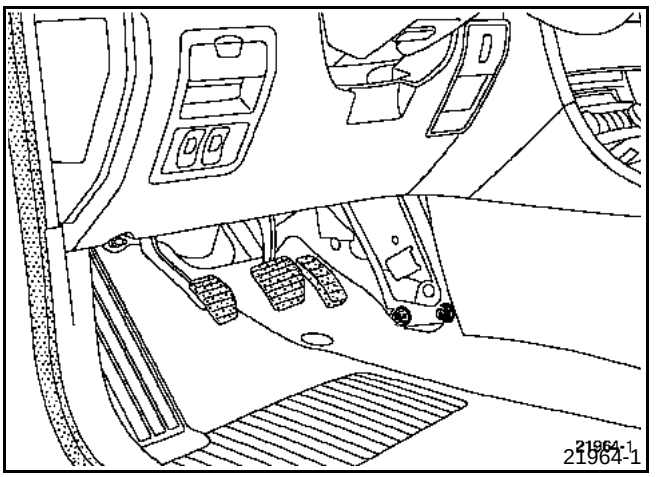

Disconnect the connections.

Turn the sensor a quarter turn to remove it.

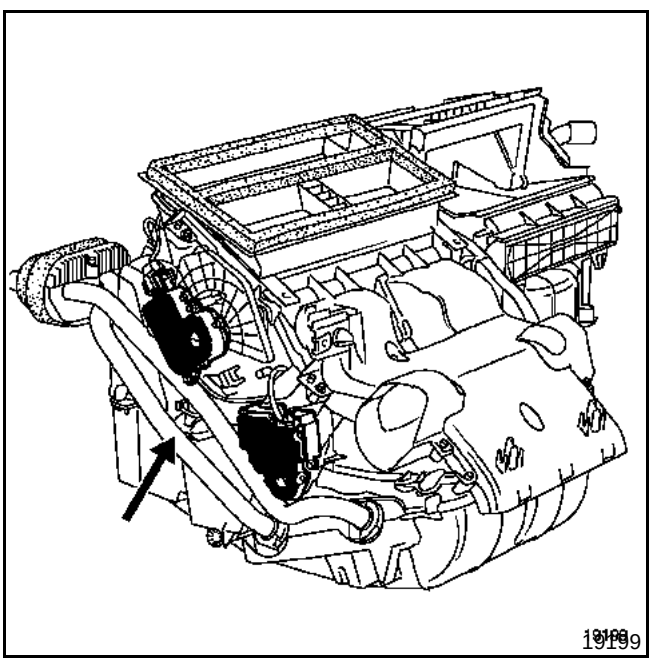

REFITTING

Carry out the removal procedure in reverse.

GETtheMANUALS.org

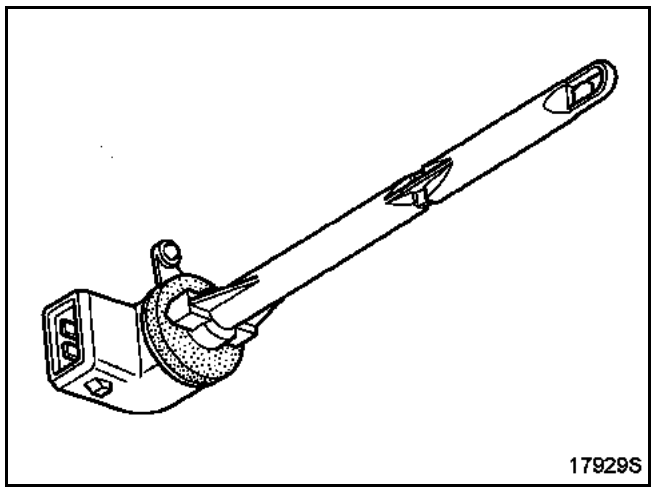

The evaporator sensor provides information about the air temperature at the evaporator outlet.

It is a negative temperature coefficient thermistor.

REMOVAL

Remove the trim.

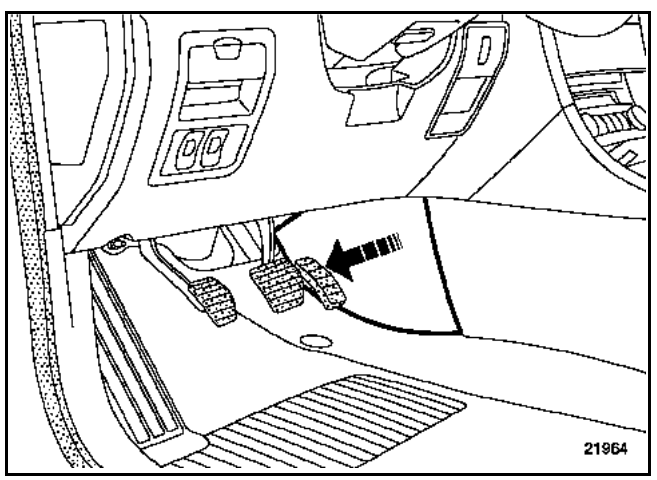

Disconnect the connections.

Remove the sensor (location A) by turning it a quarter turn.

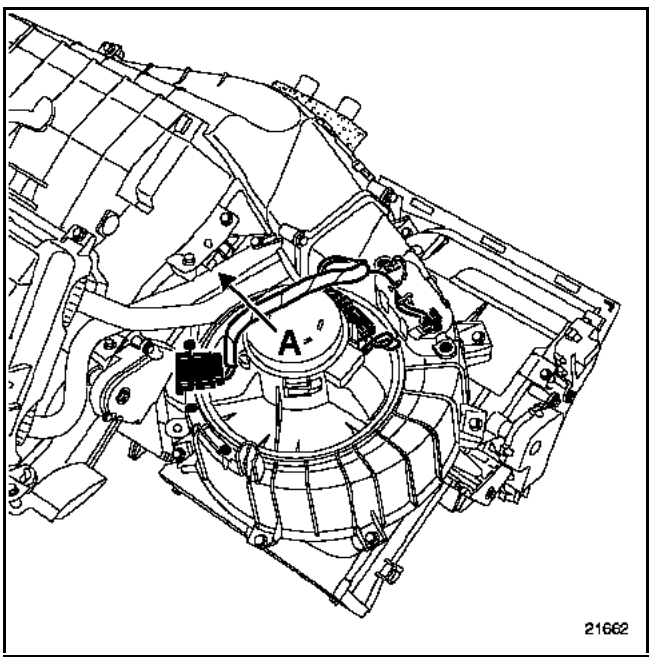

REFITTING

Carry out the removal procedure in reverse.

GETtheMANUALS.org

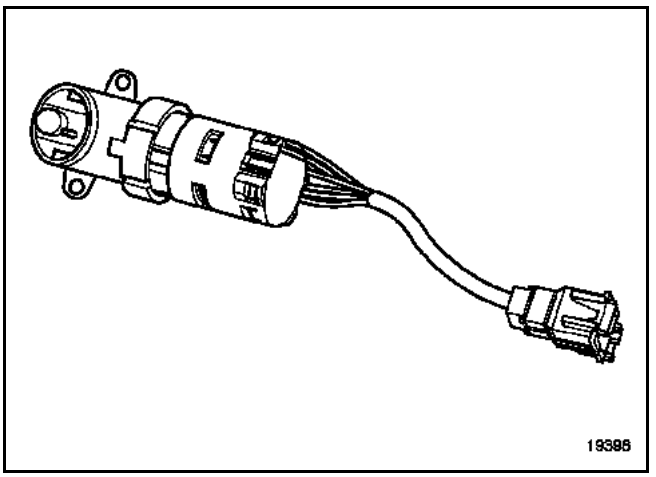

The passenger compartment sensor measures the temperature inside the vehicle.

It is a negative temperature coefficient thermistor.

LOCATION

The sensor is located in the courtesy light.

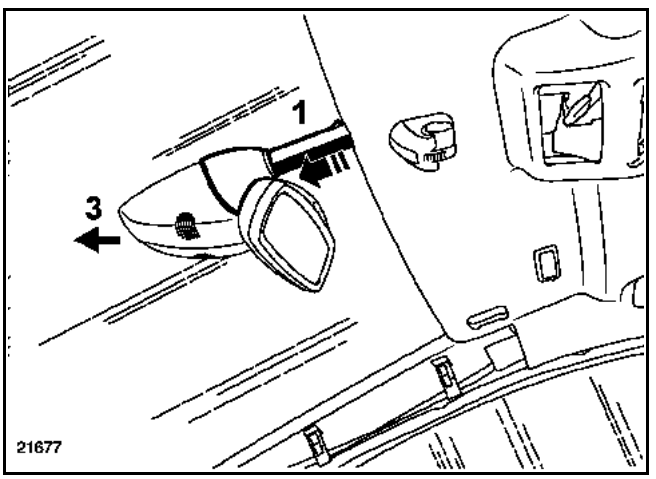

REMOVAL

Remove:
– the upper cover at (1),
– the lower cover (3) (see **section 58A: "Method of removing interior rear-view mirror"**),
– the two micro-turbine mounting bolts located inside the cover (3),
– the micro-turbine assembly.

Disconnect the connections.

REFITTING

Carry out the removal procedure in reverse.

GETtheMANUALS.org

The exterior sensor provides information about the temperature outside the vehicle.

It is a negative temperature coefficient thermistor.

LOCATION

The sensor is located in the left-hand door mirror.

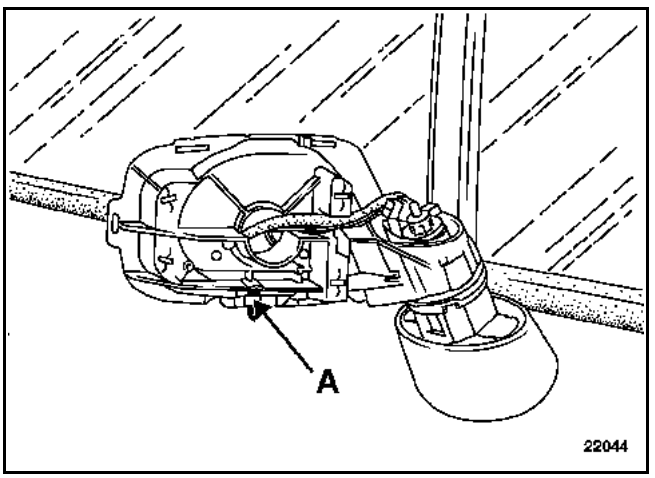

REMOVAL

Remove:
– the two covers of the door mirror (see **section 56A: "Method of removing door mirrors"**),
– the rear view mirror glass (see **section 56B: "Method of removing rear view mirror glass"**),
– the sensor using a flat screwdriver and push at (A).

The temperature sensor is removed from below.

Cut the sensor wiring.

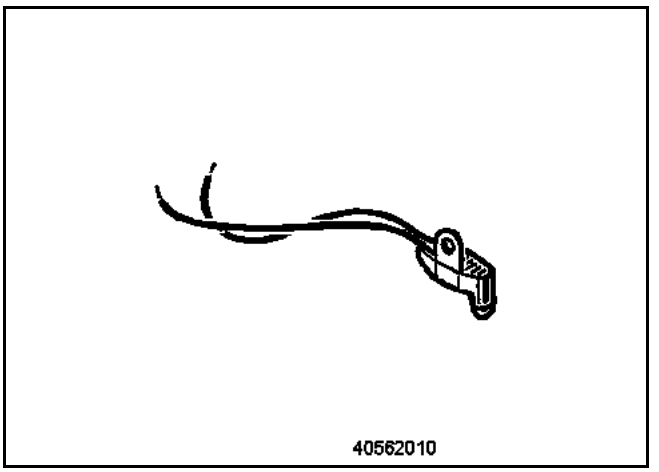

REFITTING

Make a wire joint with the new sensor.

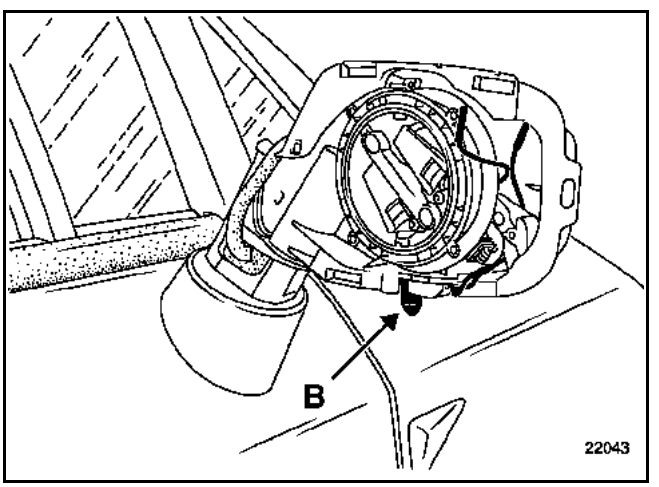

Position the temperature sensor from below and, using a flat screwdriver, push at (B).

Carry out the removal procedure in reverse.

GETtheMANUALS.org

The humidity sensor is located in the micro-turbine.

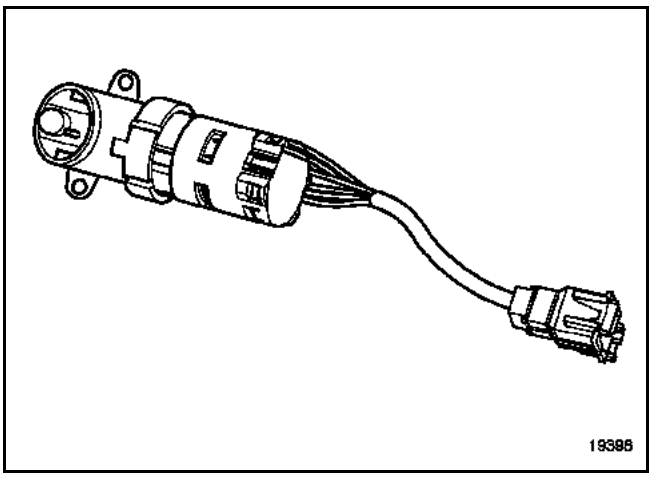

The sensor measures the humidity in the passenger compartment.

It is a capacitive sensor: the resistance changes with humidity.

LOCATION

The sensor is located in the courtesy light.

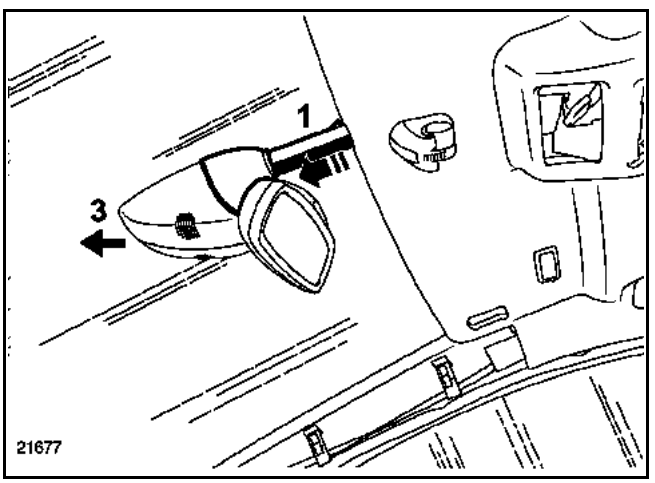

REMOVAL

Remove:
– the upper cover at (1),
– the lower cover (3) (see **section 58A: "Method of removing interior rear-view mirror"**),
– the two micro-turbine mounting bolts located inside the cover (3),
– the micro-turbine assembly.

Disconnect the connections.

REFITTING

Carry out the removal procedure in reverse.

GETtheMANUALS.org

The sunshine sensor measures the amount of sunlight and informs the computer so that the air flow from the vents can be corrected.

LOCATION

The sensor is located in the centre of the instrument panel.

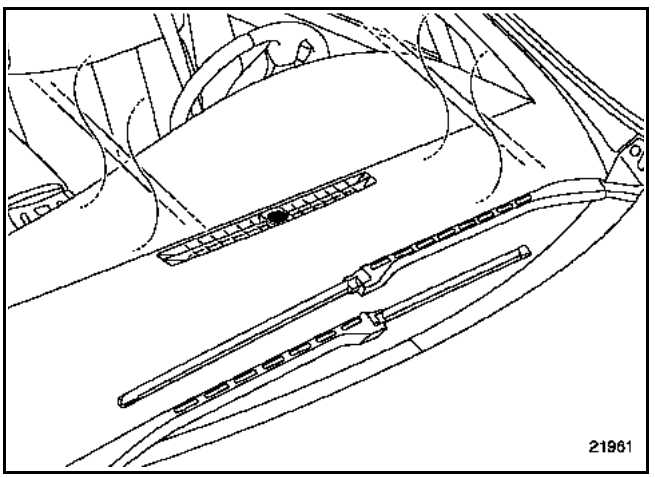

REMOVAL

Remove:
– the instrument panel grille,
– the insolation sensor.

Disconnect the insolation sensor connector.

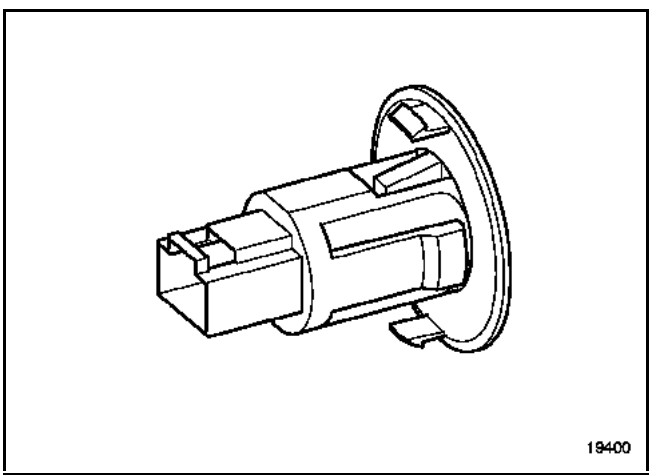

REFITTING

Refit:
– the grille,
– the insolation sensor connections,
– the insolation sensor.

GETtheMANUALS.org

The sensor continuously analyses levels of engine exhaust fumes and informs the computer for the control of the air intake flap.

The sensor is protected by a membrane which allows gas molecules through but traps humidity and dust.

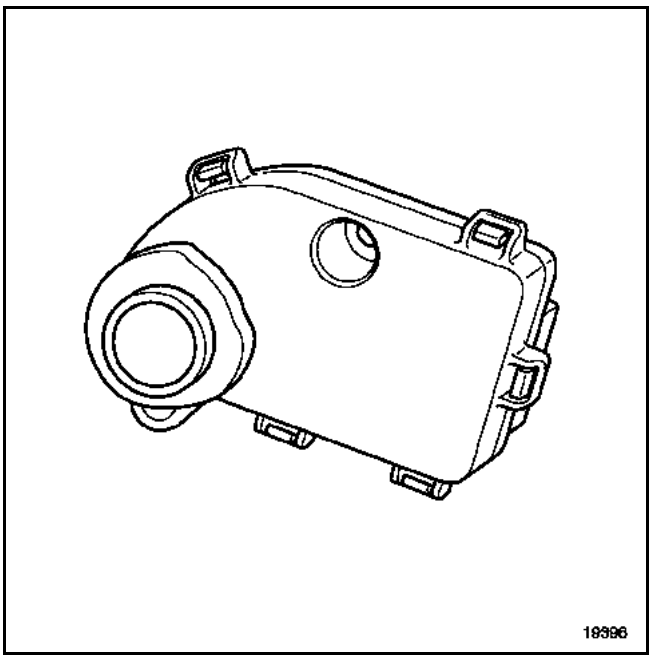

Access to it is through the glovebox.

REMOVAL

Remove:
– the glovebox (see **section 62A: "Removing the passenger compartment filter"**),
– the two air quality sensor mounting bolts,
– air quality sensor (A).

Disconnect the air quality sensor connector.

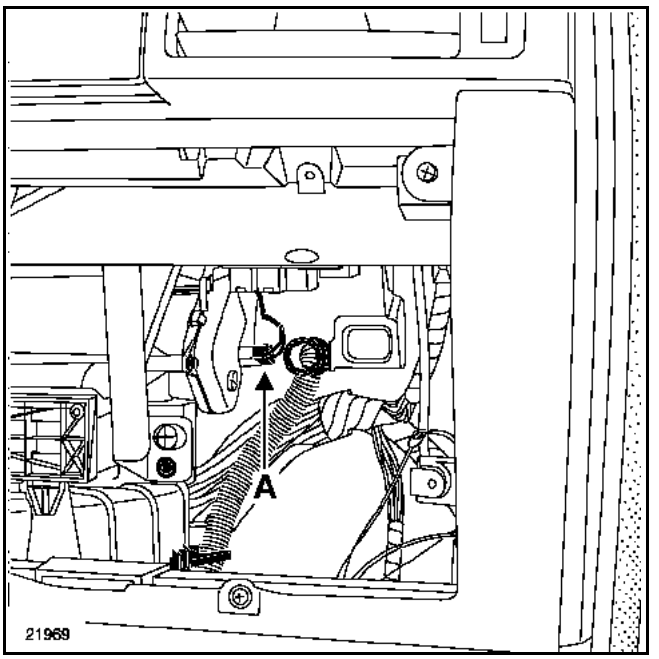

REFITTING

Carry out the removal procedure in reverse.

GETtheMANUALS.org

The sensor continuously analyses levels of engine exhaust fumes and informs the computer for the control of the air intake flap.

The sensor is protected by a membrane which allows gas molecules through but traps humidity and dust.

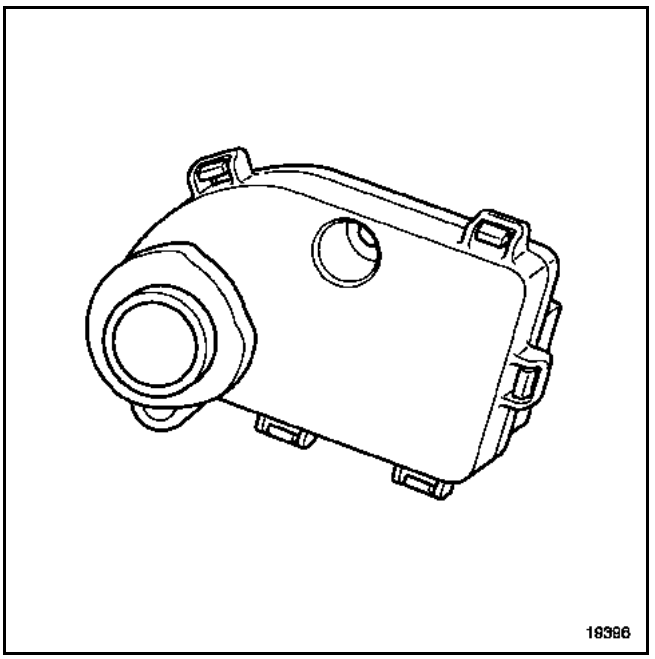

Access to it is through the glovebox.

REMOVAL

Remove:
– the glovebox (see **section 62A: "Removing the passenger compartment filter"**),
– the two air quality sensor mounting bolts,
– air quality sensor (A).

Disconnect the air quality sensor connector.

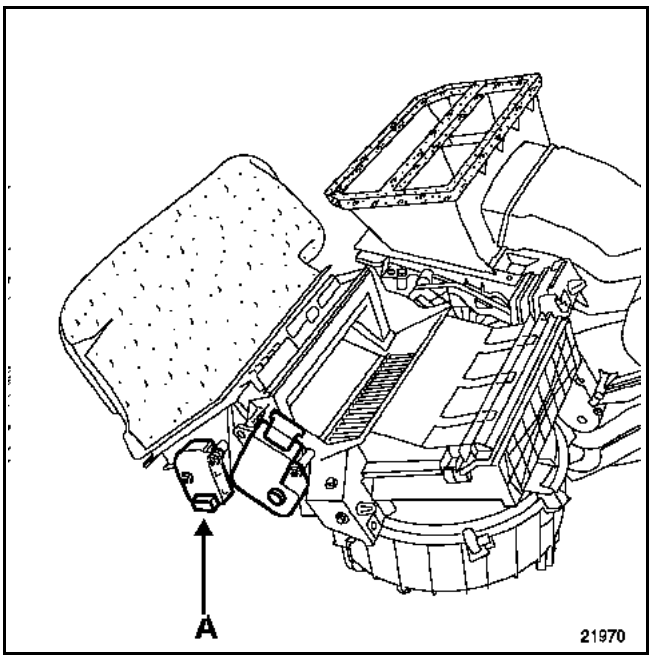

REFITTING

Carry out the removal procedure in reverse.

GETtheMANUALS.org

VEL SATIS

8 Electrical equipment

80A BATTERY
80B FRONT HEADLIGHTS
80C DISCHARGE BULBS
81A REAR LIGHTS
81B INTERIOR LIGHTING
81C FUSES
82A ENGINE IMMOBLISER
82B HORN
82C ALARM
83A INSTRUMENT PANEL
83B ON BOARD COMPUTER
83C ON BOARD TELEMATIC SYSTEM
83D CRUISE CONTROL
84A CONTROL - SIGNALS
85A WIPERS/WASHERS
86A RADIO
87B CONNECTION UNIT
87C DOOR MANAGEMENT
87D SUNROOF
87F PARKING AID
88A WIRING HARNESS
88B MULTIPLEXING
88C AIRBAGS AND PRETENSIONERS
88D DRIVER'S POSITION

BJ0E - BJ0J - BJ0K - BJ0M - BJ0P - BJ0V

77 11 311 102 **FEBRUARY 2004** **EDITION ANGLAISE**

"The repair methods given by the manufacturer in this document are based on the technical specifications current when it was prepared.

The methods may be modified as a result of changes introduced by the manufacturer in the production of the various component units and accessories from which his vehicles are constructed".

All copyrights reserved by RENAULT.

Copying or translating, in part or in full, of this document or use of the service part reference numbering system is forbidden without the prior written authority of RENAULT.

© RENAULT 2001

GETtheMANUALS.org

Electrical equipment

Contents

	Page
80A BATTERY	
Special notes	80A-1
80B FRONT HEADLIGHTS	
Turning on of automatic headlights	80B-1
Daytime running lights	80B-3
Headlight units	80B-4
Mounting brackets	80B-6
Bulbs	80B-7
Beam adjustment	80B-9
Fog lights	80B-11
80C DISCHARGE BULBS	
General Vehicle Information	80C-1
Diagram	80C-3
Rear height sensor	80C-4
Front sensor - Computer	80C-6
Headlights	80C-7
Activators	80C-8
Bulbs	80C-9
Electronics casing (ballast)	80C-10
System initialisation and headlight beam adjustment	80C-11
81A REAR LIGHTS	
Wing light	81A-1
Tailgate light	81A-2
High level brake light	81A-3
81B INTERIOR LIGHTING	
General Vehicle Information	81B-1
Interior light	81B-2
Vanity light	81B-3

	Page
81C FUSES	
Relay and fuse box	81C-1
82A ENGINE IMMOBILISER	
RENAULT Card	82A-1
Injection computer	82A-13
RENAULT Card reader	82A-14
Electric steering column lock	82A-15
82B HORN	
Horn	82B-1
82C ALARM	
General Vehicle Information	82C-1
83A INSTRUMENT PANEL	
Dashboard	83A-1
Instrument panel	83A-11
Fuel level sensor	83A-19
Oil level sensor	83A-20
Display	83A-21
83B ON BOARD COMPUTER	
Voice synthesiser	83B-1

GETtheMANUALS.org

Page

83C ON BOARD TELEMATIC SYSTEM

Navigation aid: General Vehicle Information 83C-1
Navigation aid: Central Communication Unit 83C-5
Navigation aid: Computer 83C-8
Navigation aid: Screen 83C-11
Navigation aid: Aerial 83C-14
Navigation aid: Initialising 83C-15
Navigation aid: Changing language 83C-16
Navigation aid: Relocating 83C-17
Navigation aid: Navigation menus 83C-18
Navigation aid: Customer complaints 83C-20
Navigation aid: Fault finding charts 83C-21

83D CRUISE CONTROL

Cruise control/speed limiter: Description 83D-1
Cruise control/speed limiter: Connector allocation 83D-4
Cruise control: Operation 83D-7
Speed limiter: Operation 83D-8
Adaptive cruise control: Description 83D-9
Adaptive cruise control: Operation 83D-12
Adaptive cruise control: Removal / Refitting 83D-13
Adaptive cruise control: Connector allocation 83D-14
Adaptive cruise control: System adjustment 83D-15

Page

84A CONTROLS & SIGNALS

Rotary switch 84A-1
Wiper stalk 84A-3
Lighting switch 84A-4
Hazard warning light switch 84A-5
RENAULT Card reader 84A-6
Electric steering column lock 84A-7
Engine start/stop pressure button 84A-8
Lighting dimmer 84A-9
Automatic parking brake 84A-10
Clock 84A-11
Rear screen switch 84A-12
Heated seat switch 84A-13
Electric sunroof switch 84A-14
Central door locking switch 84A-15
Power window switches 84A-16
Child safety lock switch 84A-23
Door open sensor 84A-24
Door locks 84A-25
Tailgate electric lock 84A-26
Tailgate electric striker plate 84A-27
Rear-view mirror control 84A-28
Interior rear-view mirror 84A-29
Electric rear-view mirrors 84A-30
Exterior temperature sensor 84A-31
Rear-view mirrors fault finding - Customer complaints 84A-32
Rear-view mirrors fault finding - Fault finding chart 84A-33

85A WIPERS/WASHERS

Windscreen wiper blades 85A-1
Windscreen wiper mechanism 85A-2
Windscreen wiper 85A-3
Rear screen wiper 85A-8
Screen washer 85A-10
Headlight washers 85A-11

GETtheMANUALS.org

Page

86A RADIO

Entry level radio: General Vehicle Information	86A-1
Entry level radio: Connections	86A-5
Entry level radio: Display	86A-6
Entry level radio: Disc ejection	86A-7
Top of the range radio: General Vehicle Information	86A-8
Top of the range radio: Operation	86A-10
Top of the range radio: Protection code	86A-14
Top of the range radio: Self-diagnosis	86A-17
Top of the range radio: CD changer	86A-18
Top of the range radio: Tuner-amplifier	86A-19
Top of the range radio: Display	86A-21
Radio fault finding: Customer complaints	86A-22
Radio fault finding: Fault finding chart	86A-23
Steering wheel control	86A-37
Aerial	86A-39
Speakers	86A-40

87B CONNECTION UNIT

UCH	87B-1
Programming the UCH	87B-9
Programming / Re-allocating the RENAULT Card	87B-11
Programming a RENAULT Card	87B-13
Configuration of the UCH	87B-15

Page

87C OPENING ELEMENTS MANAGEMENT

Keyless vehicle: RENAULT Card	87C-1
Keyless vehicle: Basic RENAULT Card	87C-5
Keyless vehicle: Hands-free RENAULT card	87C-7
Keyless vehicle: Side-mounted repeaters	87C-10
Keyless vehicle: RENAULT Card reader	87C-11
Keyless vehicle: Engine start/stop pressure button	87C-12
Keyless vehicle: Electric steering column lock	87C-14
Keyless vehicle: Door opening sensors	87C-15
Keyless vehicle: Hands-free aerial	87C-16
Keyless vehicle: RENAULT card reallocation	87C-17
Programming a RENAULT Card	87C-19
Keyless vehicle: Defect modes	87C-21
Keyless vehicle: Diagram	87C-22

87D SUNROOF

Electric sunroof	87D-1

87F PARKING AID

General Vehicle Information	87F-1
Inhibitor switch	87F-2
Computer	87F-3
Horn	87F-5
Ultrasonic sensors	87F-6

GETtheMANUALS.org

Page

88A WIRING

Location of the computers in the vehicle 88A-1
Location of the diagnosed computers 88A-2
Automatic seat connector 88A-3
Headlining connector 88A-4

88B MULTIPLEXING

Description 88B-1

88C AIRBAGS AND PRETENSIONERS

General Vehicle Information 88C-1
Air bag electronics casing 88C-5
Side impact sensor 88C-9
Seat position sensor 88C-10
Electrically locked seat belt inertia reel computer 88C-11
Electrically locked front seat belt inertia reels 88C-13
Front pretensioners 88C-15
Rear pretensioners 88C-17
Driver's front air bag 88C-19
Passenger's front air bag 88C-21
Front side chest air bags 88C-23
Rear side air bags 88C-25
Rear side chest air bags 88C-26
Rear side curtain air bags 88C-27
Destruction procedure 88C-29

88D DRIVER'S POSITION

Driver's seat position memory 88D-1
Electric seat adjustment 88D-8

GETtheMANUALS.org

REMOVAL

These vehicles are fitted with lead-calcium batteries with a low water consumption. Topping up the electrolyte level is therefore prohibited.

If the vehicle must be moved, insert the Renault card into the reader until the ignition is switched on before disconnecting the battery (except vehicles fitted with **Carminat Navigation**).

Pull out the card until it is in the **accessories** position: the electric column lock is now unlocked.

Switch off all the consumers.

To remove the battery, remove the covers and undo the mounting (A).

Disconnect the battery starting with the negative terminal.

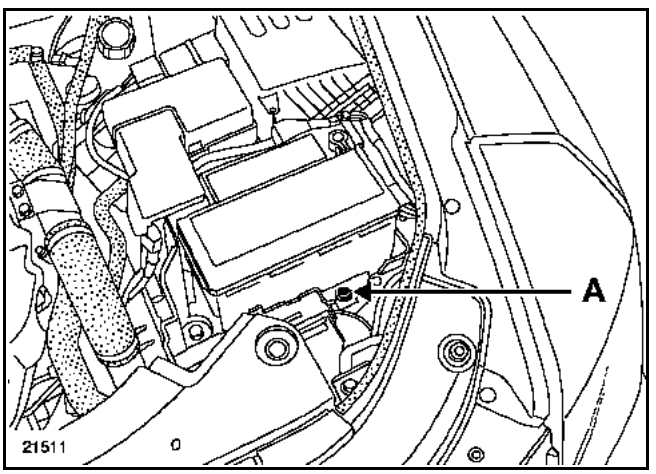

NOTE:
locking the airbag computer also allows the electric steering column lock to be unlocked.

NOTE:
For vehicles fitted with **Carminat**, wait until the system is completely shut down (40 seconds approximately) before disconnecting the battery.

REFITTING

Correctly position the battery and tighten the mounting to a torque of **1.2 daN**.

When the battery is refitted and after every time it has been disconnected, a certain number of simple programming operations, which do not require the diagnostic tool, will have to be carried out for the vehicle to work properly:

- setting the time on the clock,
- entering the four figure radio code (using the remote controls at the steering wheel),
- initialising the one touch electric window motors:
  - close the windows completely,
  - the windows move jerkily to the upper limit,
  - keep the buttons pressed for a few seconds,
  - lower the windows to the lower stop,
  - keep the buttons pressed for a few seconds,
  - the motors are initialised.
- initialising the electric sunroof motor:
  - set the sunroof switch to the maximum tilt position,
  - press the switch. After two seconds, the sunroof will tilt to the maximum position step-by-step, then drop down a few centimetres,
  - release the switch,
  - press the switch again within five seconds,
  - keep the switch depressed, the sunroof will open then close in the slide position,
  - the motor is initialised,
  - set the switch to stop.
- enter the four digit video system code.

GETtheMANUALS.org

SAFETY

It should be remembered that a battery:
– contains sulphuric acid, which is dangerous,
– produces oxygen and hydrogen as it is charged. The mixture of these two gases is a detonating gas, hence the risk of explosion.

1) DANGER - ACID

Sulphuric acid is a highly corrosive and toxic product which corrodes most metals.

It is also very important, when handling a battery, to take the following precautions:
– protect your eyes with goggles,
– wear acid-proof gloves and clothing.

If acid splashes on to your clothing, rinse all contaminated areas thoroughly in water. If your eyes are affected, consult a doctor.

2) DANGER - RISK OF EXPLOSION

When a battery is charging (either in a vehicle or elsewhere), oxygen and hydrogen are produced. Gas production is at a maximum when the battery is completely charged and the quantity of gas produced is proportional to the strength of the charging current.

The oxygen and hydrogen mix in the open air and on the surface of the plates and form a detonating mixture. This mixture is highly explosive.

The smallest of sparks or heat sources can cause an explosion. The explosion is strong enough to shatter the battery and spray the acid into the surrounding atmosphere.

People nearby are at risk (shattered casing parts, acid splashes). Acid splashes are harmful to the eyes, face and hands. They also attack clothing.

Protection against the danger of explosion, which can be caused by a poorly handled battery, must be taken very seriously. Avoid all risks of sparks.

- Check that all consumers are completely switched off.
- When a battery is being charged in a room, switch off the charger before connecting or disconnecting the battery.
- Do not put any metallic items onto the battery to avoid a short circuit across the terminals.
- Never hold a naked flame, a welding iron, hot air gun, a cigarette or a lighted match near to a battery.

GETtheMANUALS.org

INSPECTION AND MAINTENANCE

Visual inspection

1. mounting bolt

- the battery must be correctly secured (**tightening torque 12 Nm**). Excessive tightening is pointless and dangerous because it deforms, and may even break, the battery tray.
  Conversely, an insecure mounting leads to too much clearance, and there may be wear caused by the battery tray moving and breakage caused by impact.

2. cleanliness

- check for the absence of crystallising salts (sulphation) on the terminals and then clean them and grease them if necessary,
- check that the nuts are correctly tightened on the terminals. Incorrect contact could cause starting faults or charging faults which could cause sparks and the risk of the battery exploding.

If acid splashes on to your clothing, rinse all contaminated areas thoroughly in water. If your eyes are affected, consult a doctor.

BATTERY CHARGE

For the battery checking procedure and the equipment to use, refer to the note headed **Systematic battery check on New Vehicles before delivery**.

Charger validation test reminder.

During charging, heating is much more rapid and greater, the higher the charge. This is why it is **essential** to use a constant voltage charger.

Test

- set the maximum charge intensity adjustment potentiometer,
- Read off the voltage displayed on your charger or at the battery terminals.

If the voltage displayed is above **15 volts**, your charger does not have a constant voltage (**use is dangerous for the battery**).

Stop the charging operation.

GETtheMANUALS.org

AUTOMATIC HEADLIGHTS WHEN DRIVING

Vehicles may be fitted with automatic dipped headlights and sidelights that turn on automatically when daylight fades, if the engine is running.

Activation

The function is operated via the light sensor (built in to the rain sensor) and the UCH.

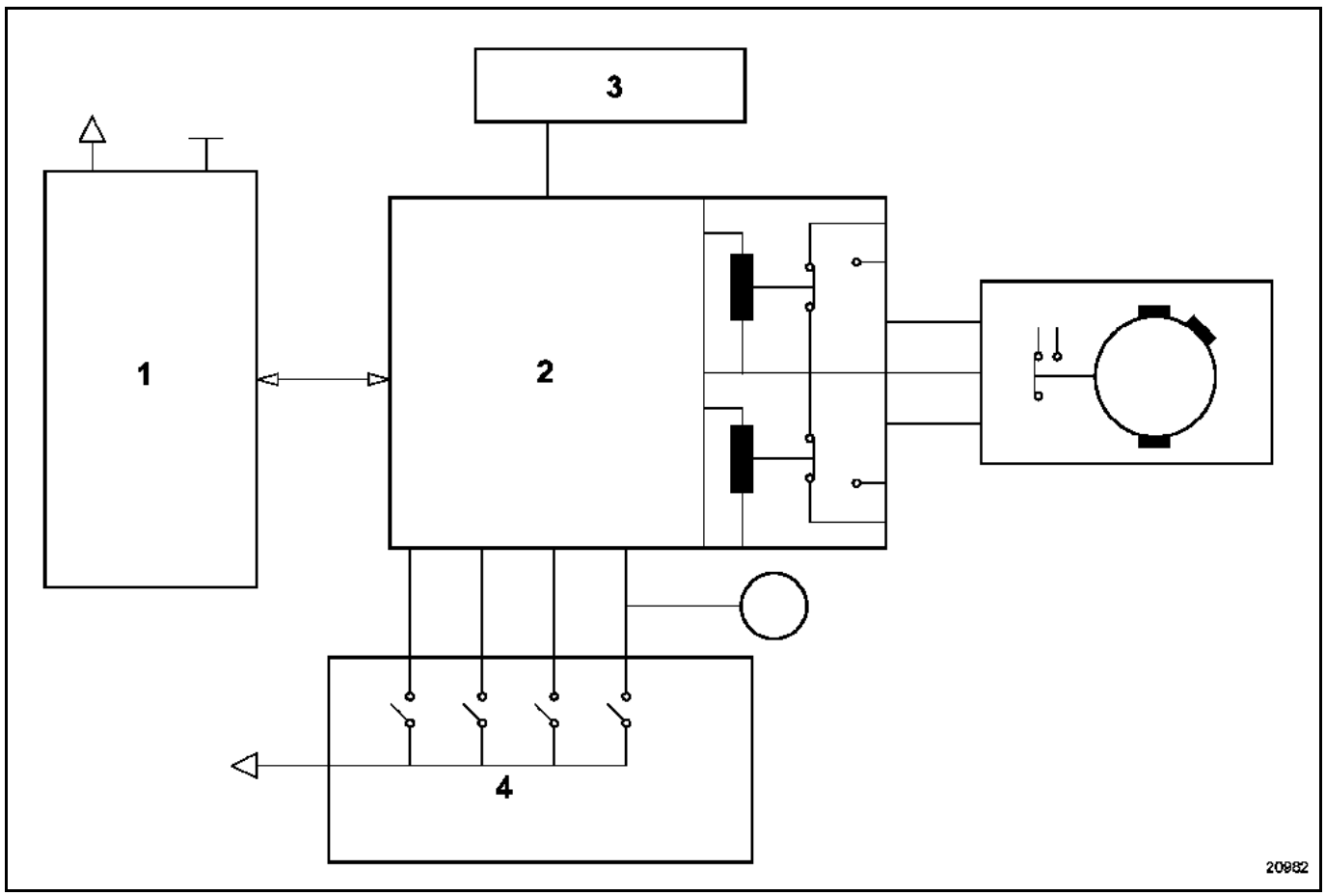

1 Rain sensor
2 UCH
3 Headlights
4 Lighting stalk

The function can be switched on or off with the lighting stalk, if the UCH is correctly configured (see **section 87B**):
– switch on the ignition,
– Using the stalk, turn the ignition on and off twice in under **4 seconds**
– if the function has changed state, the instrument panel beeps.

For details on replacing the light sensor, refer to the rain sensor information in **Section 85A Rain Sensor**.

GETtheMANUALS.org

AUTOMATIC VEHICLE LIGHTS ("Follow me home" function)

Depending on the version, vehicles may be fitted with dipped headlights that come on automatically when the engine is switched off. This function only works when the ignition is switched off and operates in blocks of **30 seconds** (maximum 2 minutes).

Activation

It is switched on with the lighting stalk:
– switch off the ignition,
– turn on the main beam headlights twice using the stalk,
– the instrument panel beeps,
– the lights will be supplied for **30 seconds**,
– another **30 seconds** are added each time the main beam headlights are turned on with the stalk.

GETtheMANUALS.org

The daytime running lights function for some countries is operated by the UCH.

In addition, the relay/fuse box contains specific shunts to supply the lighting stalk
(part number **77 00 821 578**).

To activate or deactivate this function:

- fit the shunts (A):
  – operating without daytime running lights: shunt fitted,
  – operating with daytime running lights: shunt not fitted,

- configure the UCH using the diagnostic tool and the **Command**, **System configuration** menu, then select with or without **daytime running lights** (refer to **Section 87**).

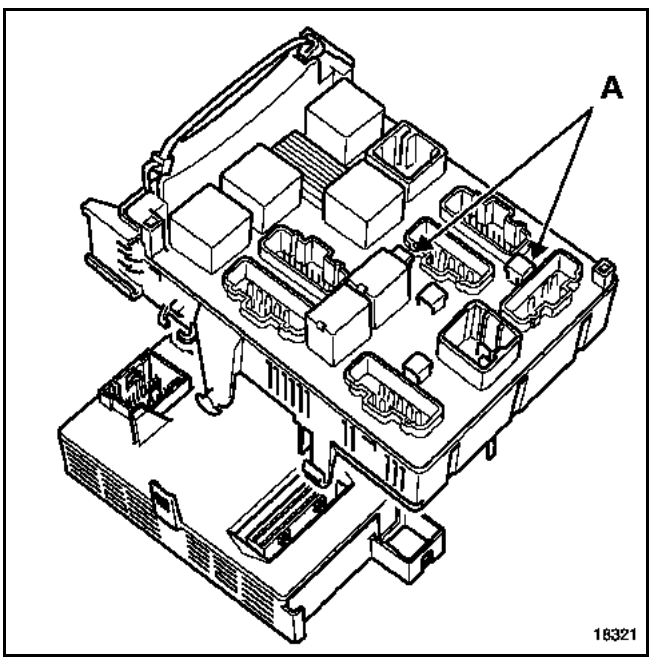

- Fit the relays on the Options Fuse and Relay Box. Refer to **Section 81C** (Check the presence of wiring) for their location.

To access the Fuse and Relay Box

Remove:
– the glove compartment secured by bolts (B),

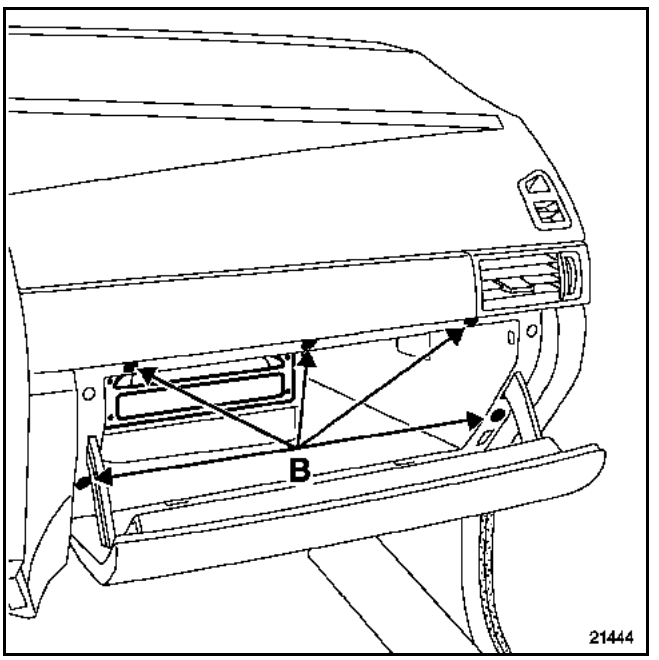

– fit the two specific relays on their bases (C).

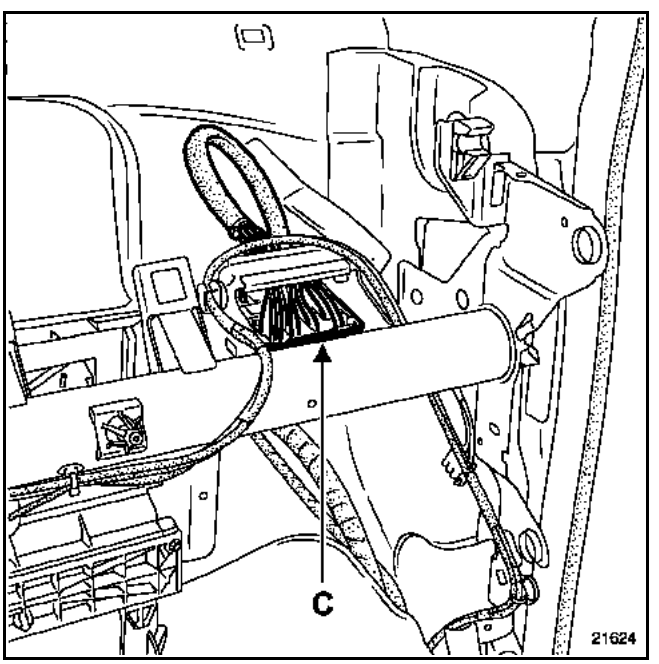

GETtheMANUALS.org

REMOVAL (all types)

Special features of headlights with xenon bulbs (refer to the **Xenon headlights section**).

IMPORTANT:
Xenon bulbs operate at a voltage of **20 000 volts** when switched on, then **85 volts** AC. when operating.

It is therefore essential to disconnect the battery before any operation.

Switching on the lamp when it is not in the light unit is prohibited (**dangerous to the eyes**).

Remove:
– cover (A),
– the drip moulding held by three bolts (B).

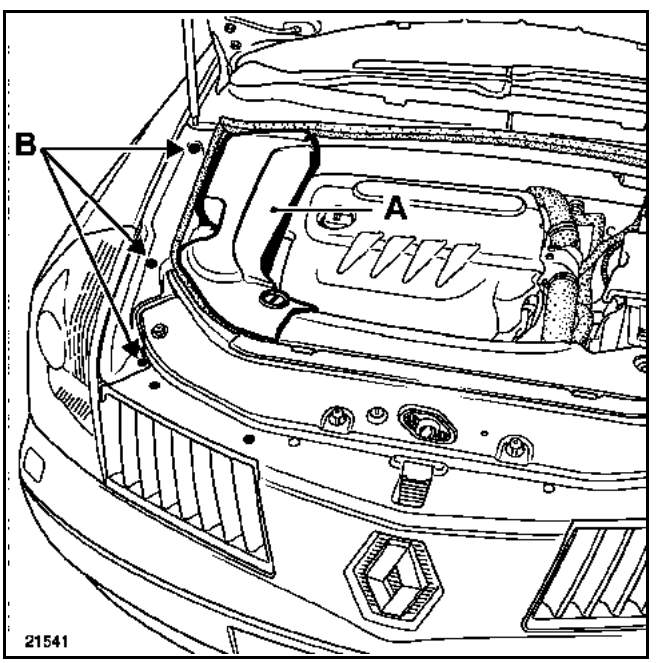

Disconnect the battery.

Remove:
– the bumpers (refer to **Bodywork section**),
– the mounting bolts (C).

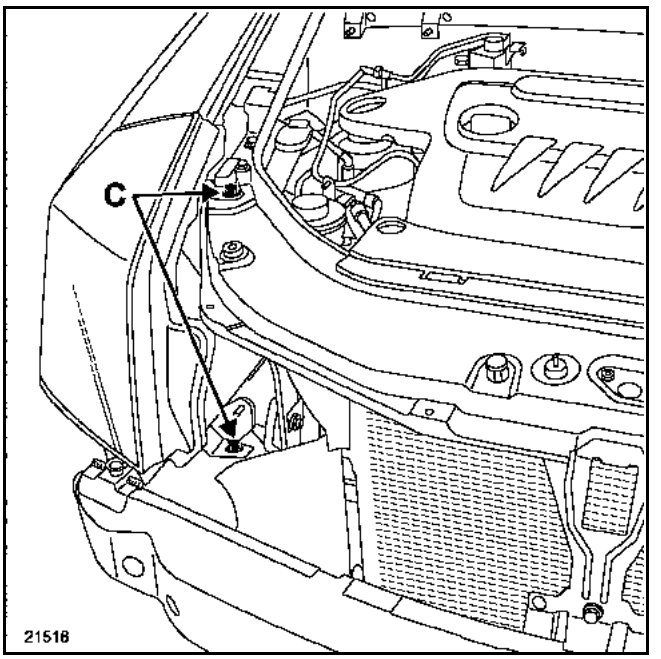

Unclip the light unit by pulling it forwards.

GETtheMANUALS.org

REFITTING

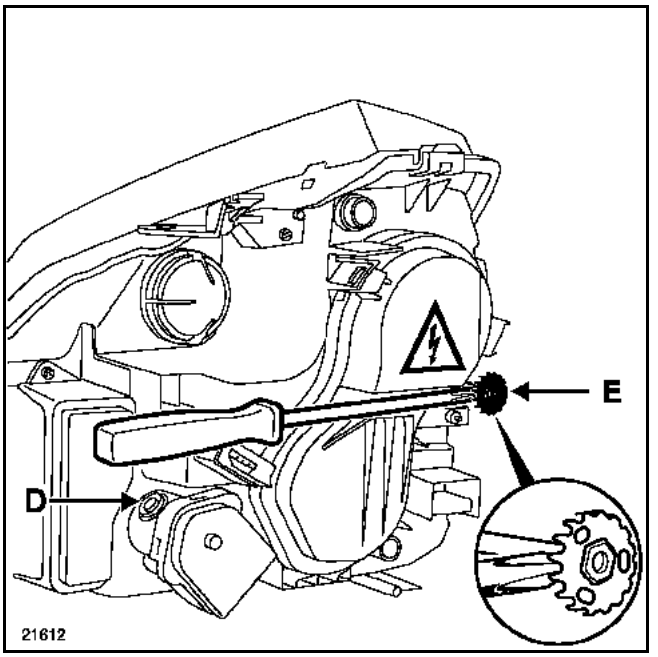

IMPORTANT:
The lens units must be adjusted once they have been fitted:
- park the vehicle on level ground,
- ensure that the vehicle is empty with a full tank if possible,
- set the adjustment control to 0,
- turn screw (D) to adjust the height,
- turn screw (E) to adjust the direction.

NOTE:
Use a Phillips screwdriver to adjust the direction (screw E).

If the vehicle has Xenon bulbs, the system must be initialised (refer to the **section on Initialising the Xenon bulbs system**).

CONNECTION

Track	Description
1	Earth
2	Main beam headlight
3	Direction indicator light
4	Dipped beam headlight
5	Side light

NOTE:
Track numbers are read from left to right on all headlights.

GETtheMANUALS.org

Mounting brackets for the light units are sold as spare parts.

The mounting of these brackets is identical to the original.

Repair kit part numbers:
– right hand light unit mounting brackets (**77 01 207 176**),
– left hand light unit mounting brackets (**77 01 207 177**).

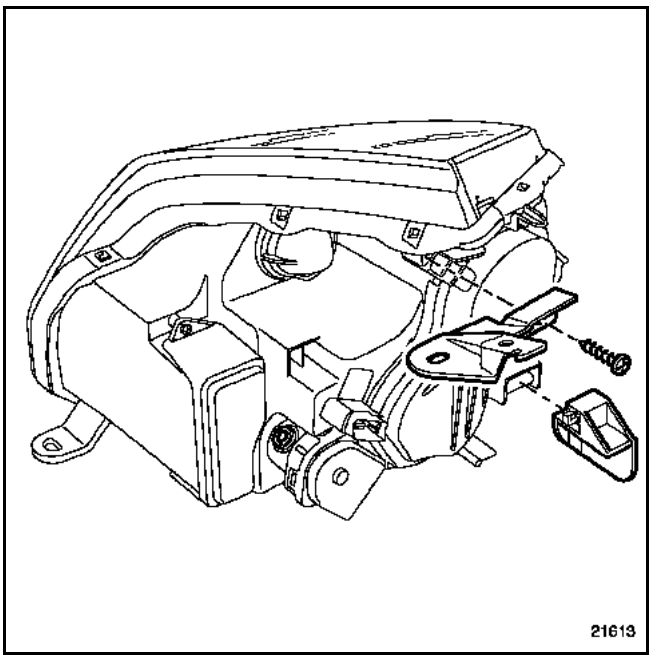

GETtheMANUALS.org

REPLACEMENT

It is necessary to partially remove the light unit to replace the bulbs.

IMPORTANT:
Before beginning the operation, the bumpers (section underneath the lens unit) must be protected with masking tape.

Remove:
– cover (A),
– the three bolts (B) holding the drip moulding,
– the radiator grille bolts (C),

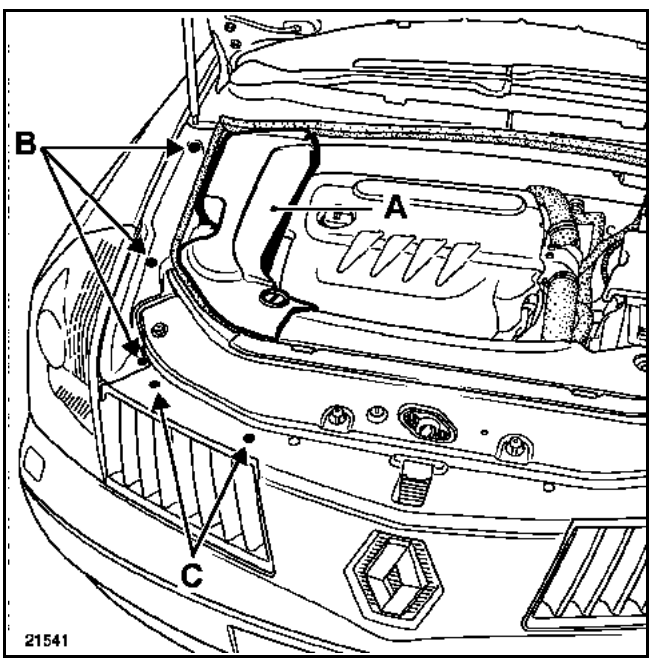

– the radiator grille by pressing on bolts (D) and (E),

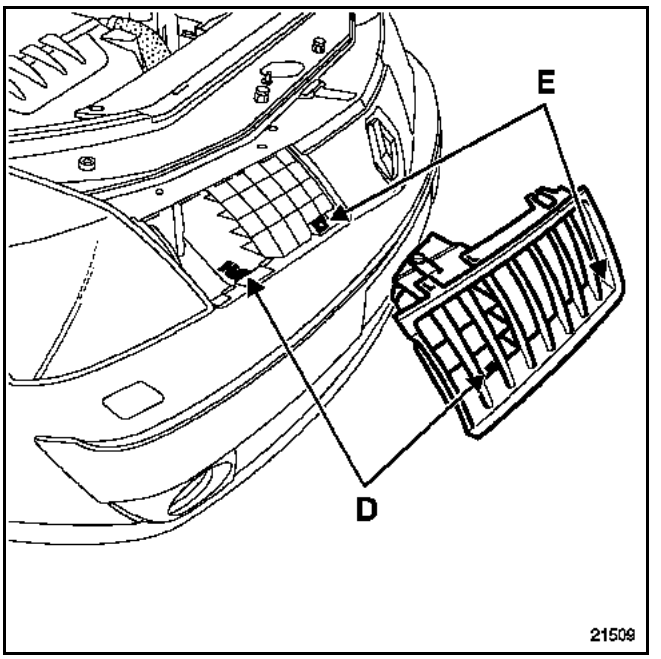

– the bolts (F) holding the light unit.

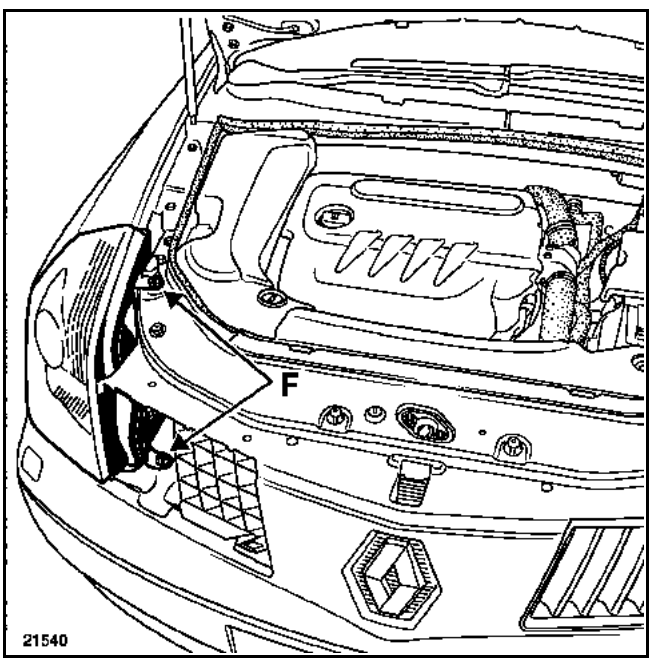

Unclip the light unit by pulling it forward, until it comes to rest on the bumper.

GETtheMANUALS.org

DIRECTION INDICATOR LIGHTS

Only the direction indicator lights do not require removal of the light unit.

Remove:
- the watertight cover (1) (1/4 turn anti-clockwise),
- the bulb mounting (1/4 turn anti-clockwise),

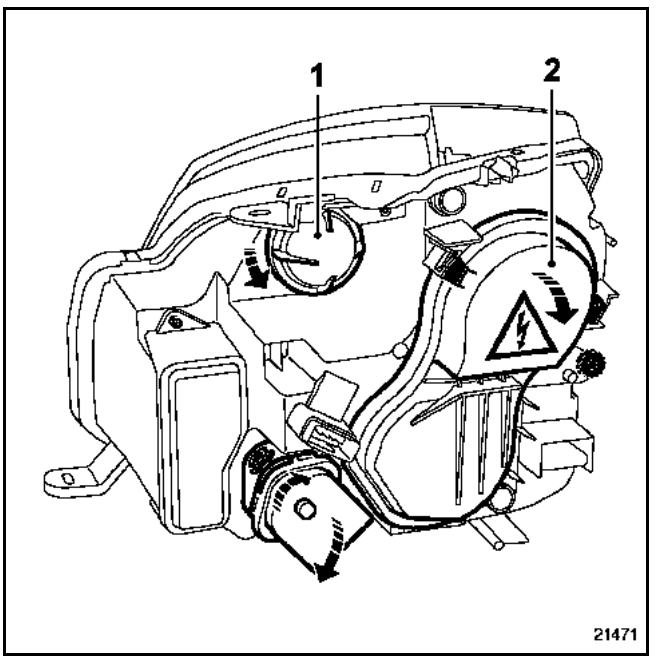

SIDE LIGHT, DIPPED BEAM HEADLIGHT, MAIN BEAM HEADLIGHT BULBS

The bulbs are replaced after the sealing cover has been removed (2).

NOTE:
For information on replacing the Xenon bulbs, refer to the section **Xenon bulbs**.

GETtheMANUALS.org

REMOVING AND REFITTING THE BEAM ADJUSTMENT CONTROL

To remove the control, you must first remove the mounting.

Remove:
- the screw covers,
- the fixing screws (A).
- the automatic parking brake handle,
- the beam adjustment control mounting.

Disconnect the connector, then release the control from the mounting.

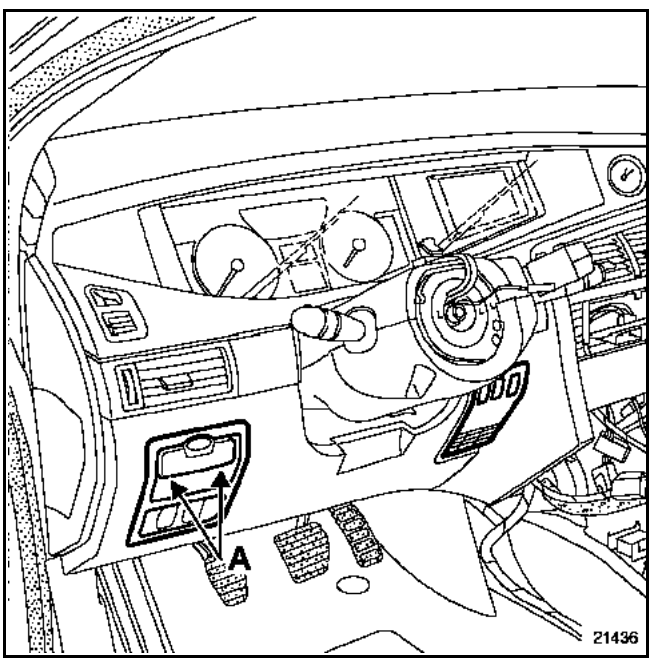

CONNECTION

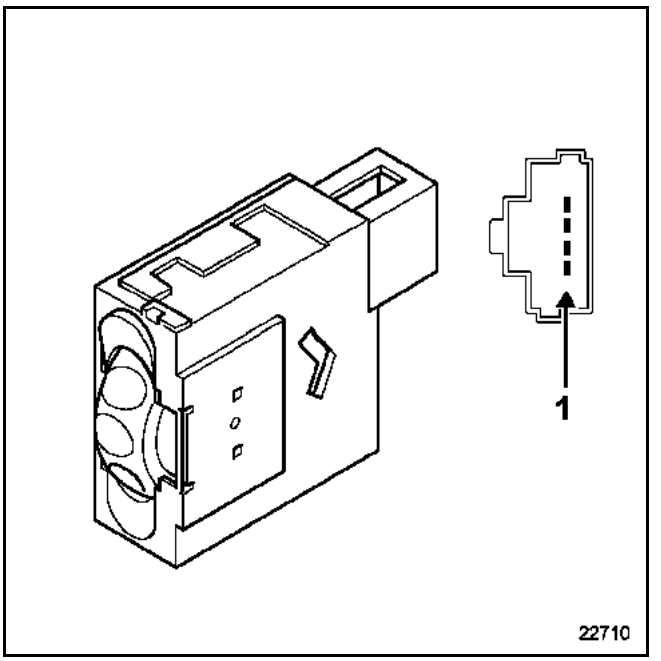

WHEEL POSITION	CONTROL OUTPUT VOLTAGE (in volts)
4	11 volts
3	8.5 volts
2	6 volts
1	3.5 volts
0	1.1 volts

Track	Description
1	Dipped headlights signal
2	Earth
3	+ After ignition
4	Control output

GETtheMANUALS.org

ACTUATOR

REMOVAL

NOTE:
To remove the actuator, it is necessary to remove the lens unit.

Disconnect the connector from the remote adjustment actuator.

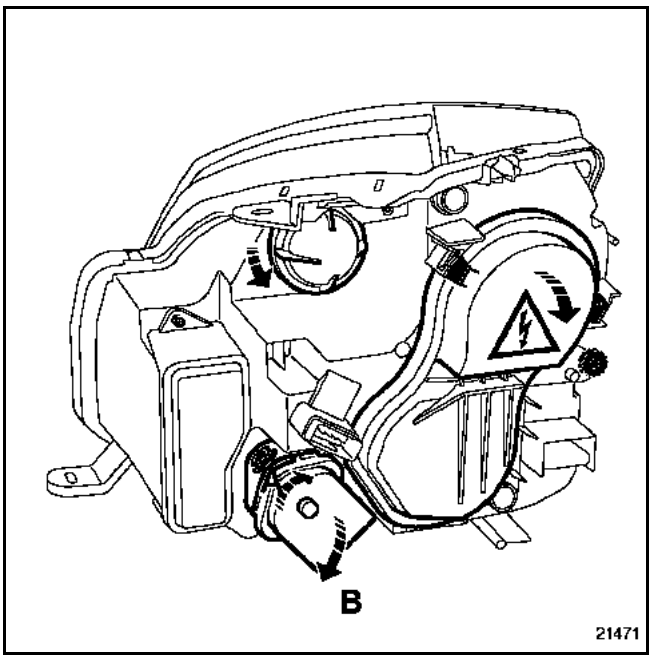

Turn the actuator through an eighth of a turn towards the outside (A) to release it from the light unit.

Disconnect the ball joint from the reflector shell, tilting the actuator slightly (B).

REFITTING

Keep the reflector shell towards the rear of the lens unit by pulling on the bulb base.

Click the ball joint into the headlight clip.

Position the actuator on the lens unit.

Turn the actuator through an eighth of a turn towards the inside to engage it in the light unit.

Reconnect the connector.

Carry out adjustments.

CONNECTION

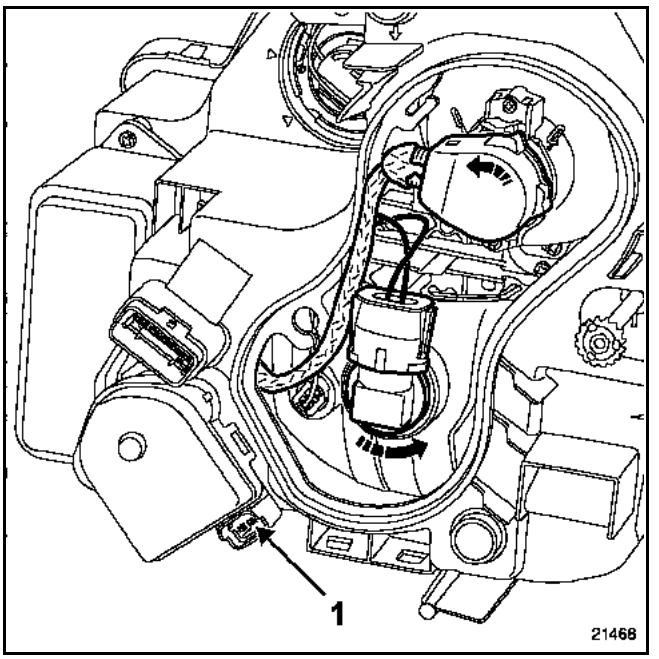

Track	Description
1	Earth
2	Actuator control
3	Supply

NOTE:
The actuators of light units fitted with Xenon bulbs are specific.

GETtheMANUALS.org

REMOVAL

Remove the front bumper (refer to the **Bodywork section**).

Unscrew the mounting bolts (A).

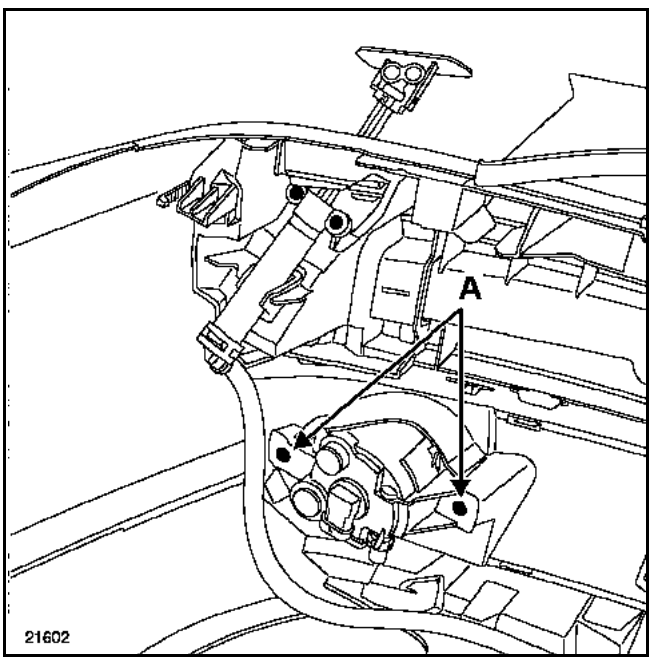

REFITTING

There are no specific points to mention here, but remember to adjust the fog lights.

Open the access flap (B) then carry out adjustments.

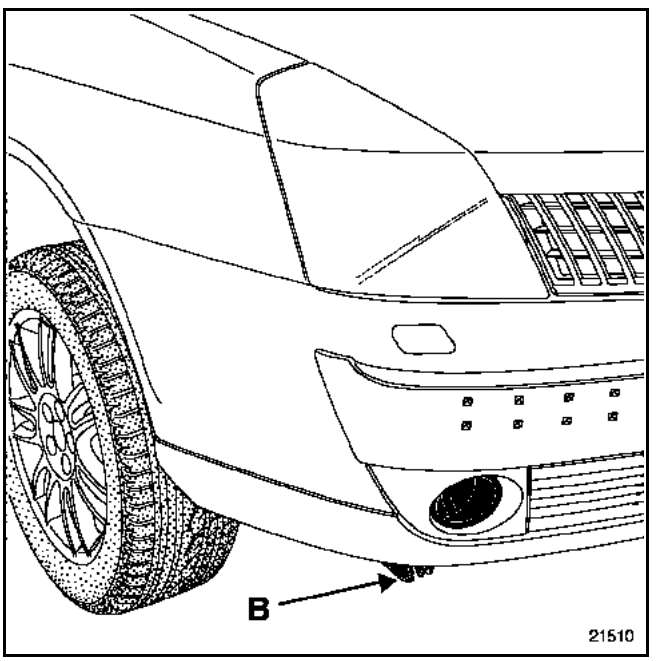

NOTE:
adjustments can be carried out with a **6 mm** elbow Allen key.

GETtheMANUALS.org

These vehicles are required to have the following fitted:
– automatic headlight beam correction as a function of vehicle ride height,
– headlight washers.

WARNING:
it is forbidden to fit a headlight with a Xenon bulb to a version not designed for this purpose.

These bulbs do not contain a filament. The light from these bulbs is generated by two electrodes in a quartz bulb which contains high pressure gas (xenon).

The electronic module, or ballast, incorporated into the headlight is supplied by the vehicle's battery (**12 volts**) and generates a controlled voltage of **20,000 volts** when the light is switched on, then an alternating voltage of **85 volts** during operation.

Automatic headlight beam correction as a function of vehicle ride height:
The automatic adjustment system maintains a constant beam height in relation to the initial adjustment set in the factory or by the After-Sales network, irrespective of changes in vehicle load and height.

Fault finding tools are compatible with this system.

Every time a fault is cleared, the actuators move downwards.

DESCRIPTION

The system consists of:
- two light units fitted with a normal side light bulb, an H1 type main beam bulb, a D2S type xenon dipped beam bulb and an orange indicator bulb,
- two electronic units (ballast) incorporated into the headlights (E) (one per headlight),

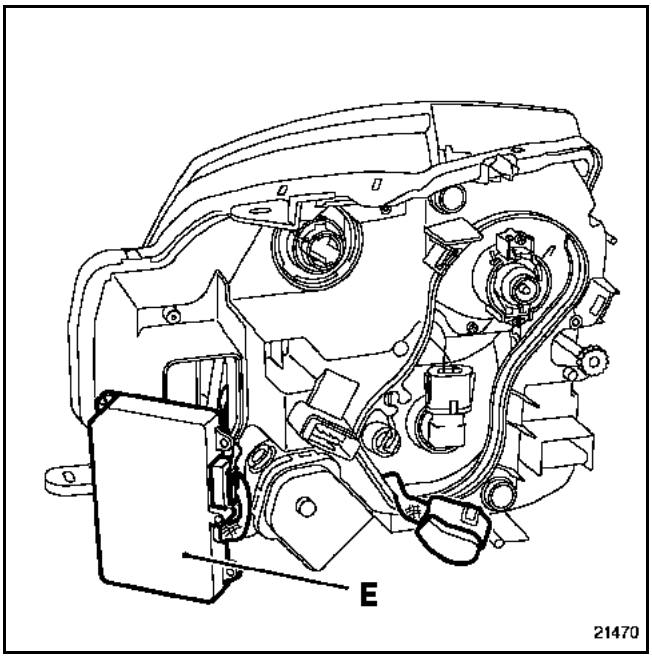

GETtheMANUALS.org

- a rear height sensor (F) located under the left hand side of the vehicle. It records the height of the body and sends it to the sensor/computer

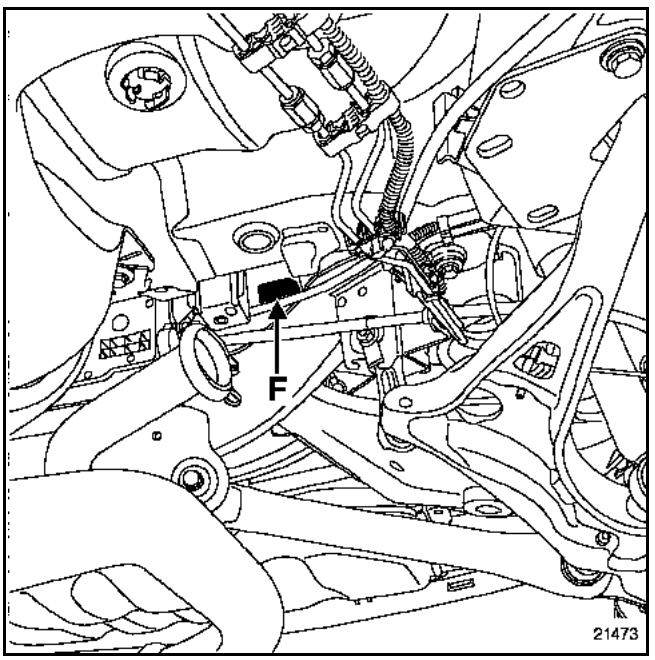

- a front sensor/computer (G) which records the height of the front axle. The computer adjusts the headlights in line with variations in ride height due to acceleration, braking and variations in load.

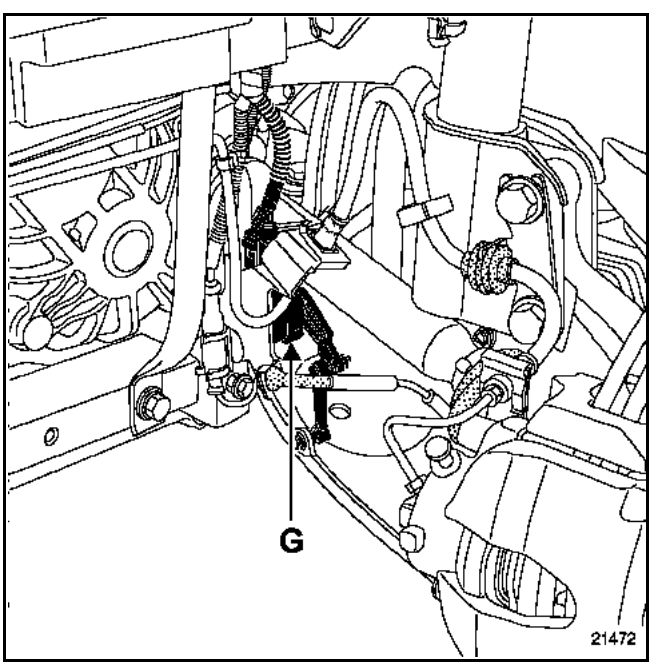

NOTE:
The vehicle speed signal is used to vary the beam height at high speed.

- two specific adjustment actuators (H) mounted on the back of each lens unit.

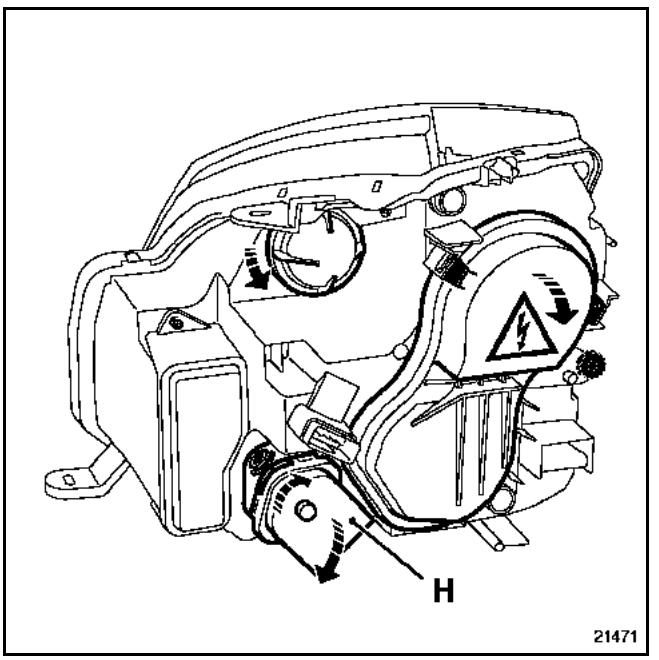

GETtheMANUALS.org

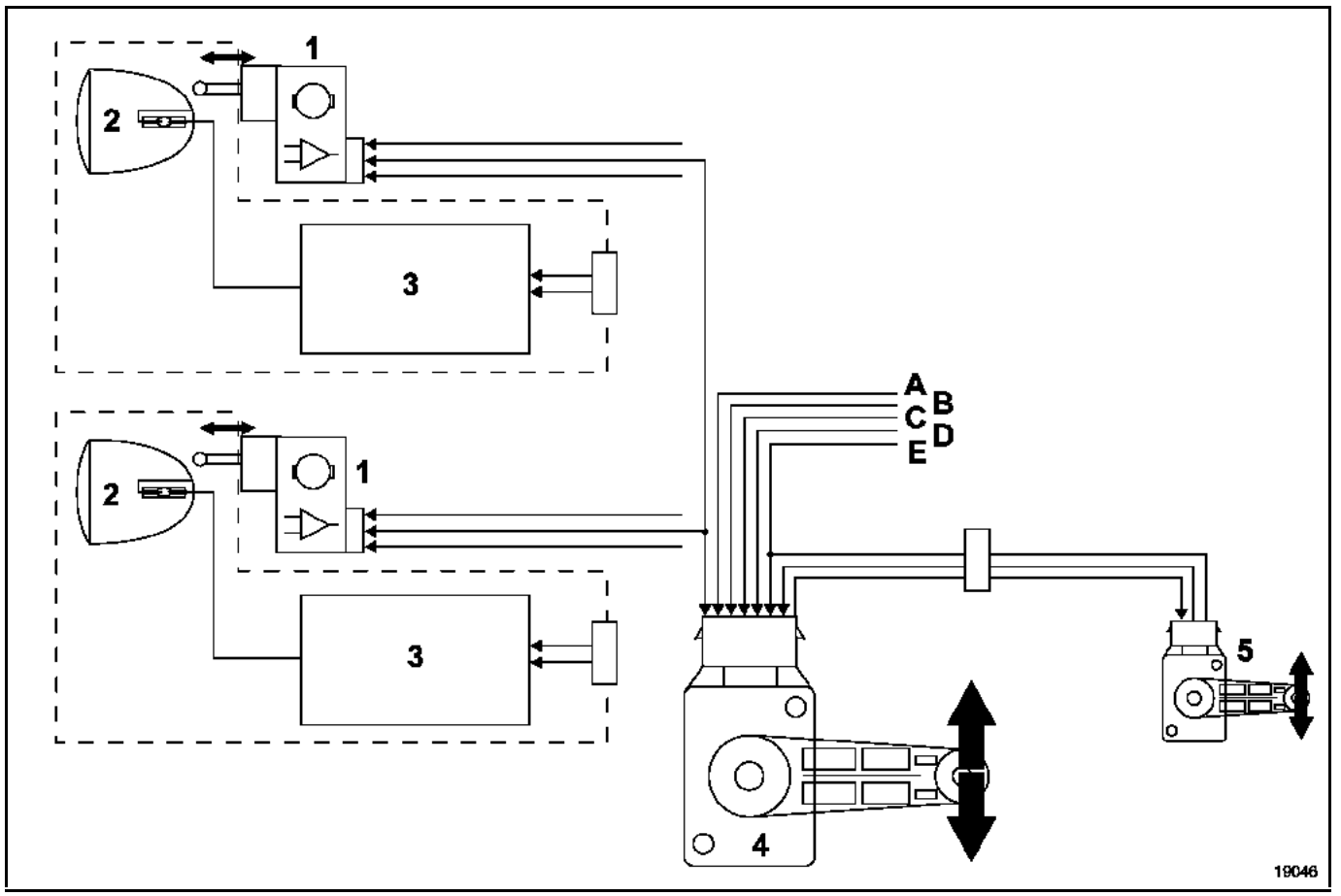

1 actuator
2 headlight
3 electronic unit (ballast)
4 front sensor/computer
5 rear sensor
A + lighting
B + after ignition feed
C diagnostic connection
D vehicle speed signal
E earth

GETtheMANUALS.org

REMOVAL

Remove:
– the acoustic bar held by bolts (A),
– the exhaust clamp (B),
– the rod securing the fuel pipes (bolt C),
– heat shield rear mounting (bolt D) and central mounting (clips E),

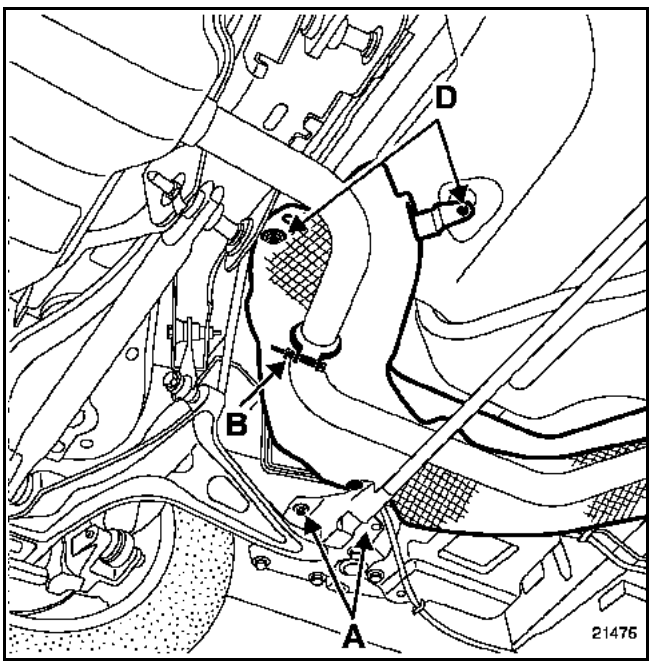

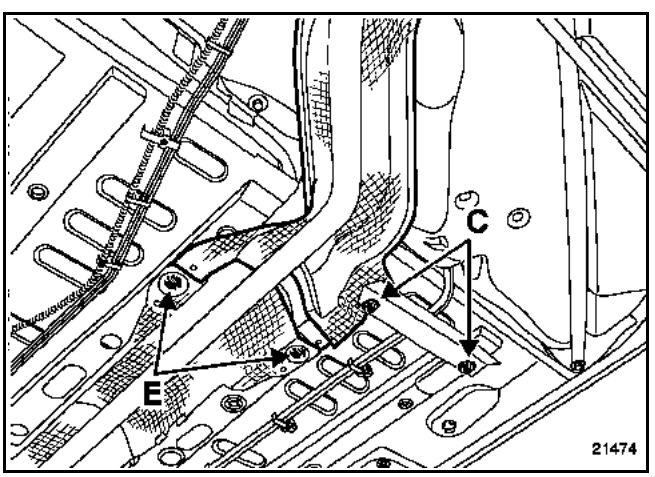

– the rear height sensor (F) held in place by a mounting bolt.

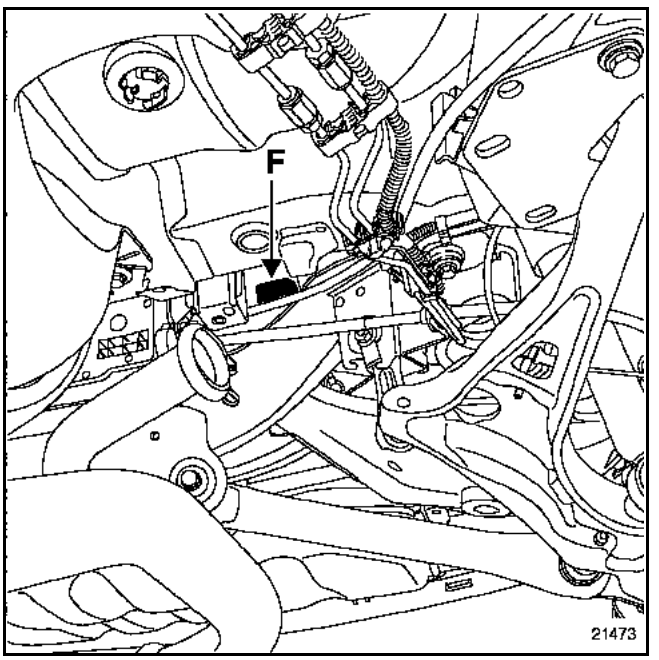

REFITTING

IMPORTANT:
If the heat shield is damaged, it must be replaced and correctly refitted.

IMPORTANT:
After the whole assembly has been refitted, the system must be initialised and the lens units adjusted (**refer to initialisation section**).

GETtheMANUALS.org

CONNECTION

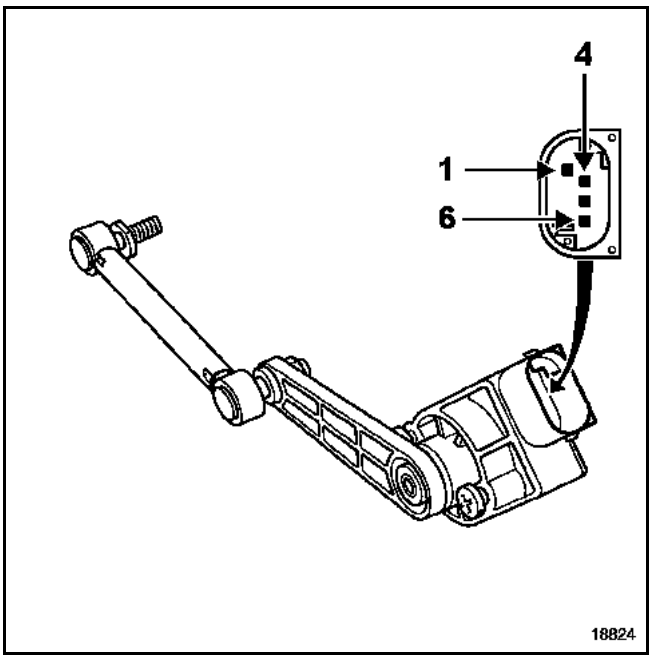

Track	Description
1	Earth
2	Not used
3	Not used
4	Not used
5	Supply
6	Sensor signal

GETtheMANUALS.org

REMOVAL

Remove:
– the front left-hand wheel,
– nut (A) connecting the ball joint to the lower wishbone, and unscrew the mounting bolts (B).

Disconnect the connector and remove the sensor.

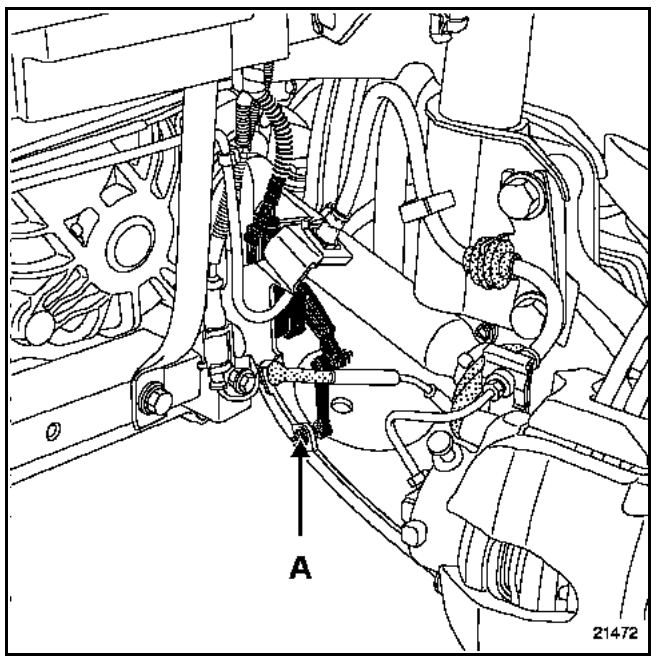

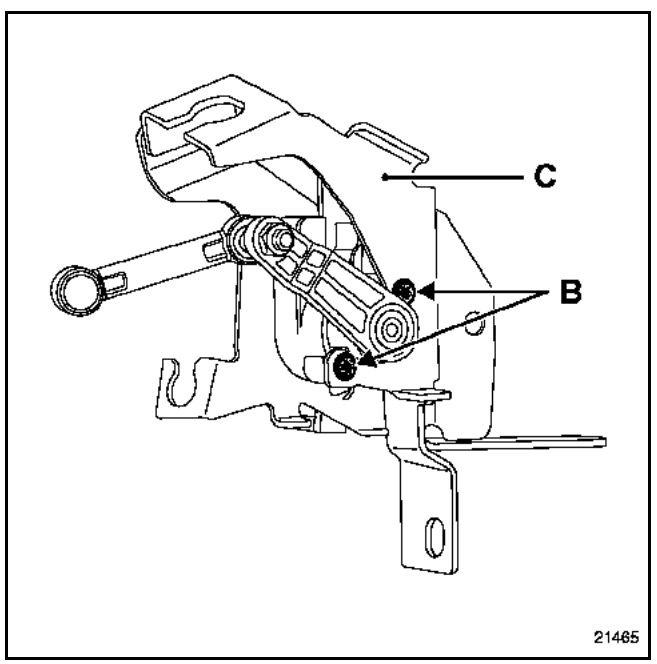

NOTE:
It is not necessary to remove mounting (C) to remove the sensor/computer.

REFITTING

IMPORTANT:
After the front sensor/computer has been refitted, the system must be initialised and the headlights adjusted (**refer to the Initialisation section**).

CONNECTION

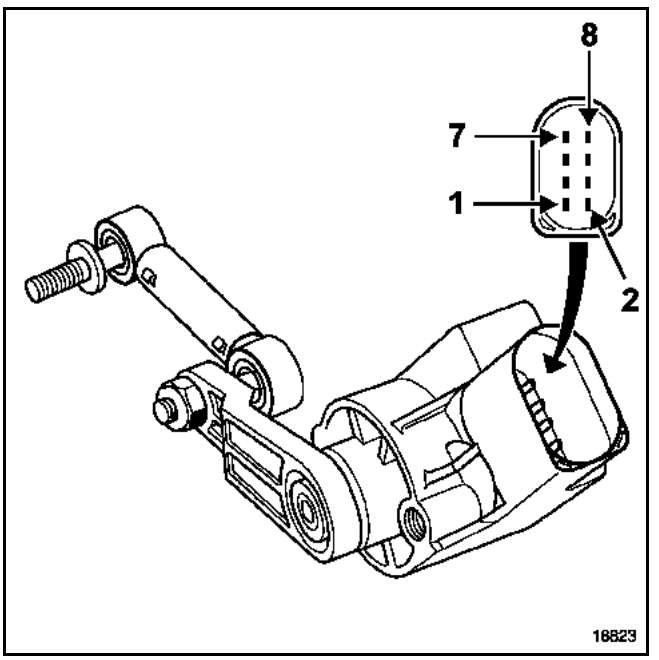

Track	Description
1	Earth
2	Supply
3	Rear sensor signal
4	Vehicle speed signal
5	Diagnostic connection
6	Lighting signal
7	Actuator control
8	Rear sensor supply

IMPORTANT:
After the front computer sensor has been replaced, the vehicle type must be configured using the diagnostic tool and the system must be initialised.

GETtheMANUALS.org

REMOVAL - REFITTING

The method for removing/refitting headlights with xenon bulbs is the same as the method for all other headlight types.

WARNING:
Xenon lamps operate at a voltage of **20,000 volts** when switching on, then **85 volts** AC. when operating.

It is therefore essential to disconnect the lens unit and wait for the computer (ballast) to cool down before removal.

It is forbidden to switch the bulb on when it is not in the light unit (dangerous to the eyes).

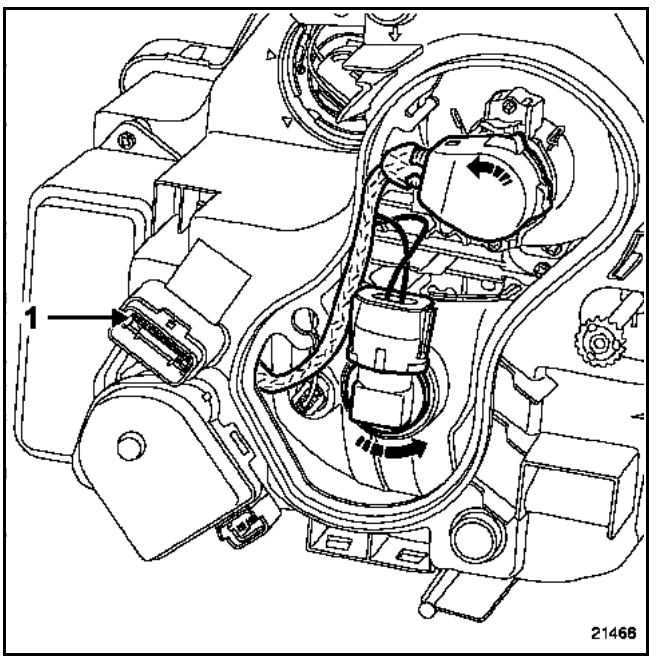

CONNECTION

Track	Description
1	Earth
2	Main beam headlight
3	Direction indicator light
4	Dipped beam headlight
5	Side light

NOTE:
track numbers are read from left to right on all headlights.

GETtheMANUALS.org

REMOVAL

NOTE:
To remove the actuator, it is necessary to remove the lens unit.

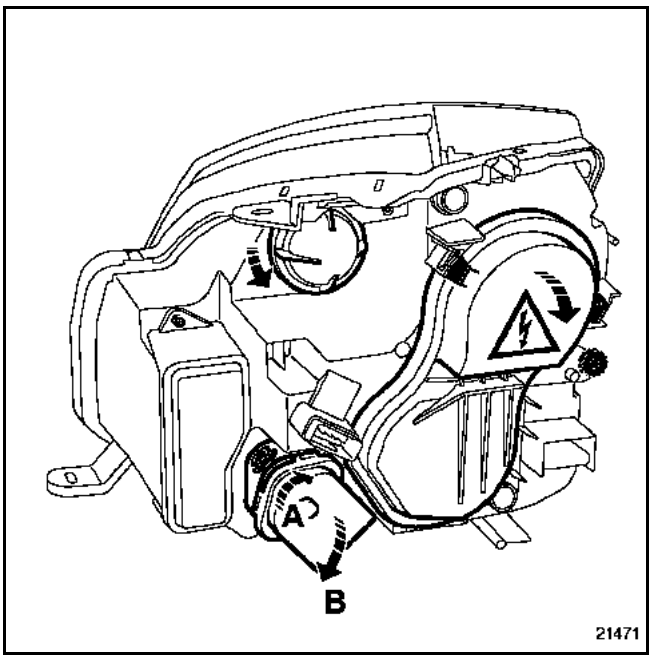

Turn the actuator through an eighth of a turn towards the outside (A) to release it from the light unit.

Disconnect the ball joint from the reflector shell, tilting the actuator slightly (B).

REFITTING

To assist removal of the actuator, remove the sealed cover and hold the headlight reflector.

IMPORTANT:
After the actuators have been removed, the system must be initialised and the headlights adjusted (refer to the **Initialisation section**).

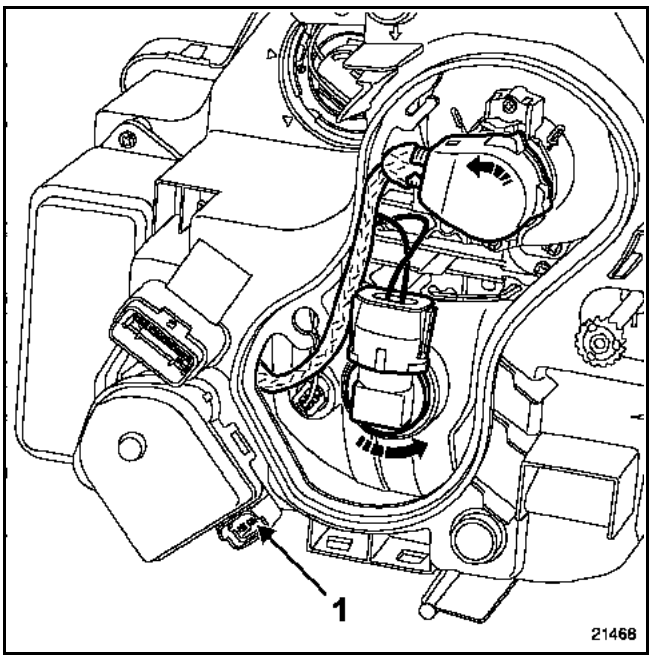

CONNECTION

Track	Description
1	Earth
2	Actuator control
3	Supply

NOTE:
the actuators of light units fitted with Xenon bulbs are specific.

NOTE:
If the dipped beam headlights are on when the ignition is switched on, the actuators are set to their lowest position and then return to an intermediate position.

GETtheMANUALS.org

REMOVAL

IMPORTANT:
Xenon bulbs operate at a voltage of **20,000 volts** when switched on, then **85 volts** AC. when operating.

It is therefore essential to disconnect the light unit before removal.

It is forbidden to switch the bulb on when it is not in the light unit (dangerous to the eyes).

Disconnect the bulb connector (1) by turning it through a quarter of a turn in an anti-clockwise direction.

Remove the bulb by unclipping the mounting clip (2).

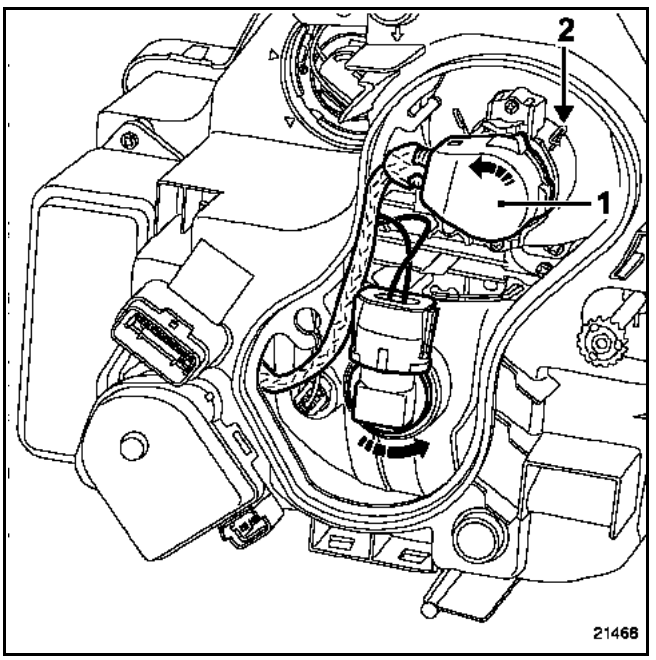

IMPORTANT:
Do not jolt or knock the bulb as the external conductor (3) is very fragile and must not be damaged.

REFITTING

Hold the bulb by the cap (if you touch the bulb, you must clean it with alcohol and a soft lint-free cloth).

Position the bulb. The lug (4) must be opposite the groove in the headlight.

Position the bulb connector by turning it through a quarter of a turn.

NOTE:
The lens unit must be partially removed to remove the bulb (see **the section on Headlights**, **Bulbs**).

IMPORTANT:
After a Xenon bulb is replaced, the system must be initialised and the headlights adjusted (see **Initialisation Section**).

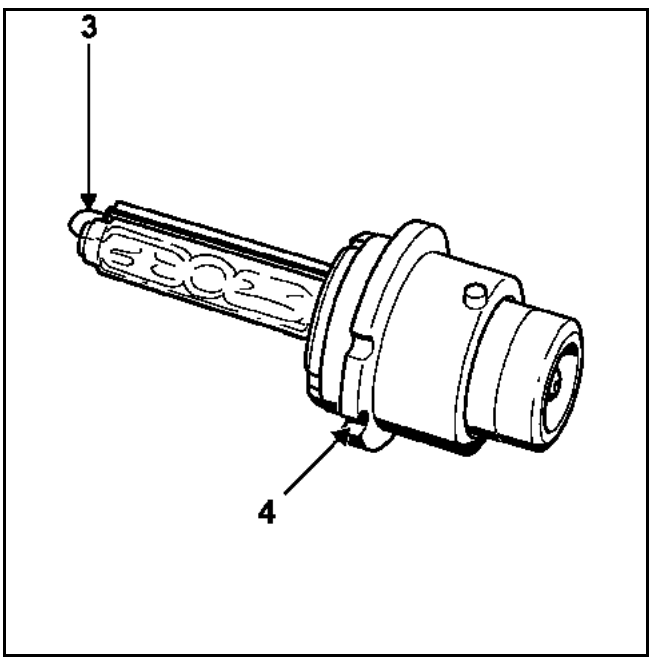

GETtheMANUALS.org

IMPORTANT:
Xenon bulbs operate at a voltage of **20,000 volts** when switched on, then **85 volts** AC. when operating.
It is therefore essential to disconnect the battery before any operation.
Switching on the lamp when it is not in the light unit is prohibited (**dangerous to the eyes**).

REMOVAL

Remove:
– the relevant headlight,
– the sealing cover,
– the bulb connector (A) by turning it through a quarter of a turn in an anti-clockwise direction,
– the two bolts (B) to access the electronic unit.

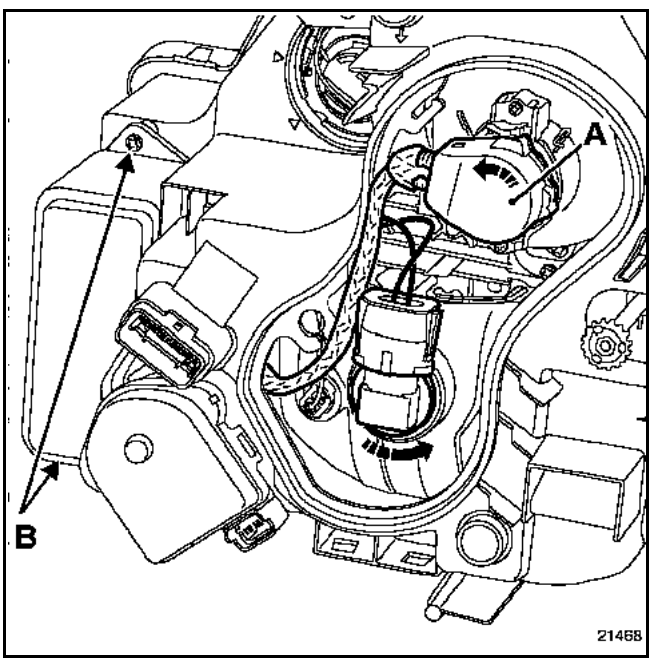

Disconnect the side light connector (C) and the main beam headlight connector (D) to make way for the connector (A).

Take out the electronic unit.

Disconnect connector (E).

Remove the electronic unit by following the route of the high voltage wiring harness

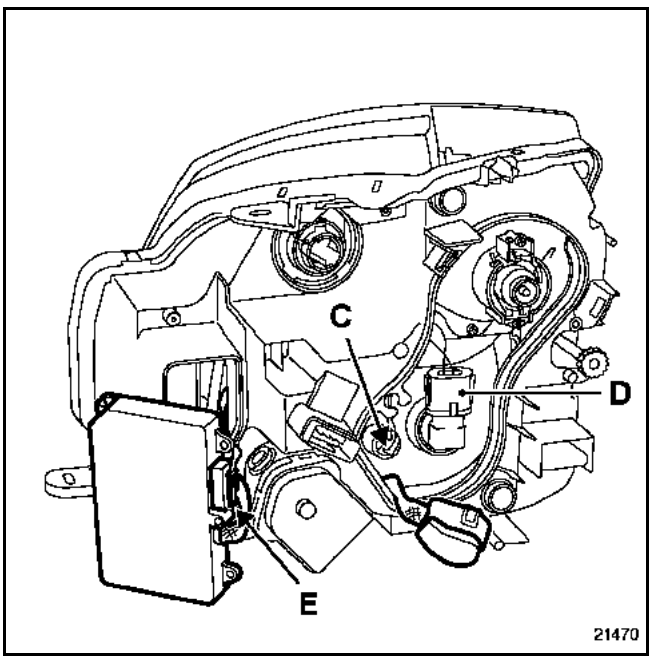

REFITTING

Route the high voltage wiring correctly.

IMPORTANT:
After an electronic unit has been removed, the system must be initialised and the lens units adjusted (refer to the **Intialisation Section**).

GETtheMANUALS.org

This procedure should be performed after operations on the headlights, on a sensor or on any part of the suspension.

Park the vehicle on level ground.

IMPORTANT:
Do not apply the parking brake.

Ensure that the vehicle luggage compartment is empty.

Do not get into the vehicle throughout the operation.

Check the tyre pressures and open the bonnet.

Adjust and fit the beam adjuster.

Connect the diagnostic tools and check that there are no faults.

Switch on the ignition, switch on the dipped beam headlights, select and confirm the **discharge bulb** computer.

Enter command **AC010: Computer Calibration**.

NOTE:
It is possible to check that the system has been initialised:
– the front sensor value read by parameter **PR017: Front height** should be identical to the initial front height value (**PR004**),
– the rear sensor value read by parameter **PR018: Rear height** should be identical to the initial rear height value (**PR005**).

Without switching off the ignition, adjust the beam height using screw (1) and the direction using screw (2) with a Phillips scewdriver.

IMPORTANT:
the level of the vehicle must not change between initialisation and adjustment of the headlights. The two procedures are inextricably linked.

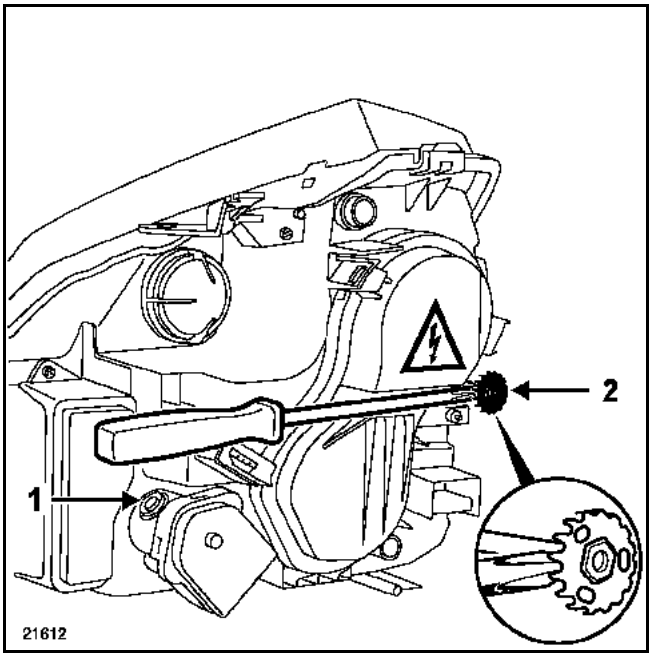

IMPORTANT:
The system cannot be initialised if:
– the vehicle speed is not present or is not at zero,
– the position of a sensor is outside permitted tolerance values,
– the computer has not been correctly configured.

GETtheMANUALS.org

The rear lights are split into two sections, one on the wing and the other on the tailgate.

REMOVAL

Disconnect the connector.

Remove the rear mounting bolt (A).

Remove the light.

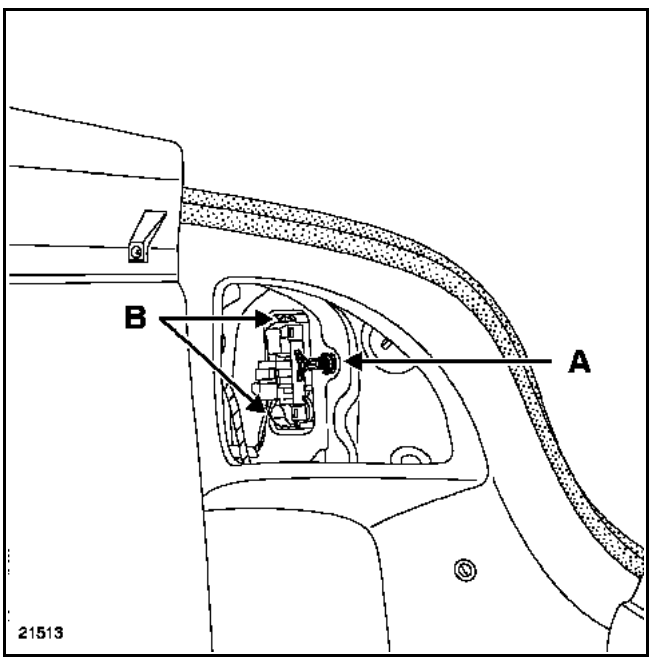

To access the bulbs, unclip the bulb holder by pressing on the tab (B).

CONNECTION

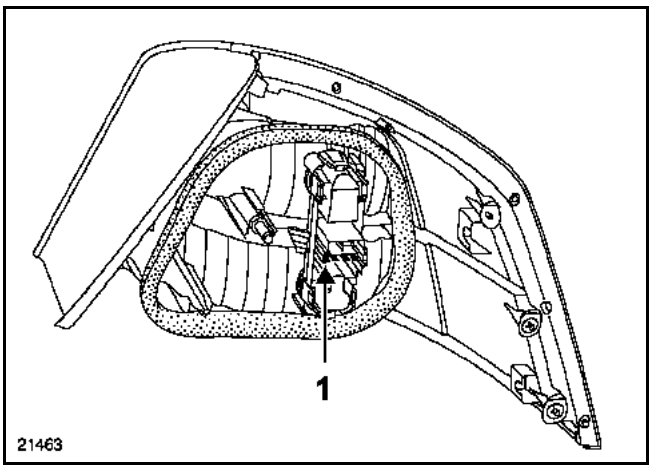

Rear wing lights connector

Track	Description
1	Indicator
2	Brake light
3	Not used
4	Side light
5	Earth

GETtheMANUALS.org

REMOVAL

Remove the rear mounting bolt (C).

Release the unit and disconnect the connector.

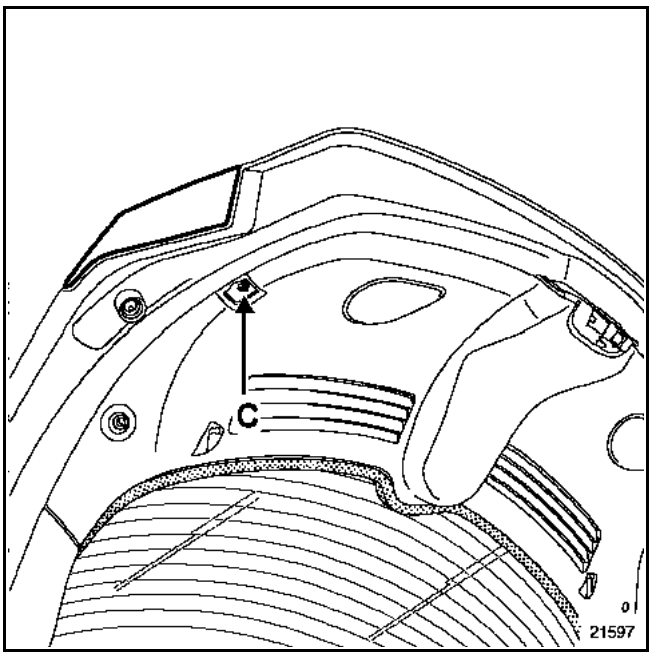

Example for the LH rear light:

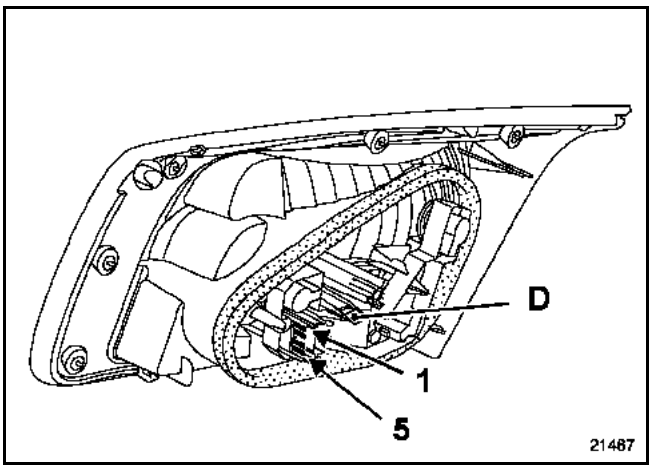

To access the bulbs, unclip the bulb holder by pressing on the tab (D).

CONNECTION

Rear left-hand tailgate lights connector

Track	Description
1	Fog light
2	Side light
3	Not used
4	Reversing light
5	Earth

Rear right-hand tailgate lights connector

Track	Description
1	Earth
2	Reversing light
3	Not used
4	Side light
5	Fog light

GETtheMANUALS.org

REMOVAL

Remove:
– the access flap;
– the two mounting bolts (A).

Release the blanking cover (B) and disconnect the light's supply connector.

Unclip the light by pressing on the catches (C).

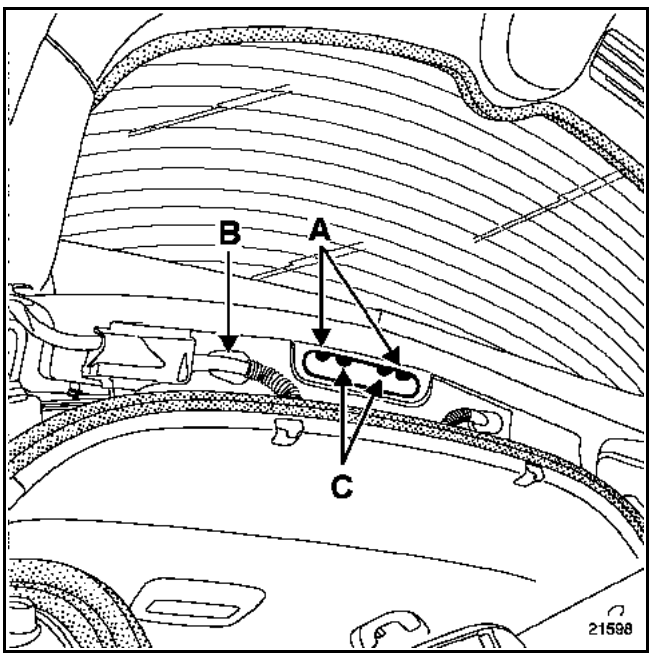

Unclip the windscreen washer nozzle (D) and remove the light.

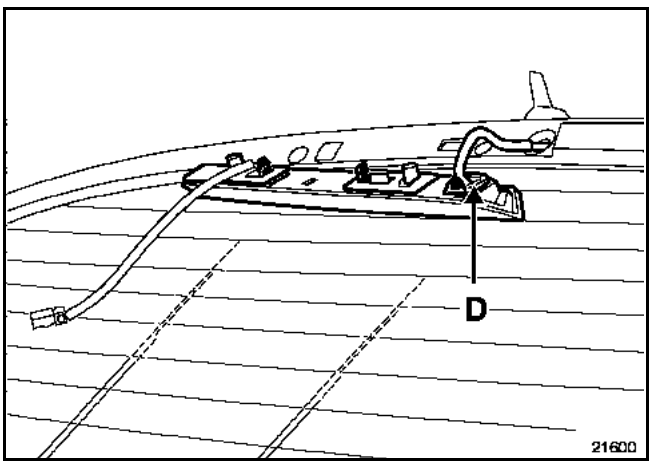

NOTE:
The vehicles are equipped with a brake light containing diodes.

GETtheMANUALS.org

SPECIAL NOTES

Depending on version, vehicles can have:
– independent door sill lights (which light up when the relevant door is opened);
– timed courtesy lights (front and rear);
– under-dashboard lights and lights under the front seats linked to the courtesy lights;
– lights in the luggage compartment;
– courtesy lights on each sun visor.

TIMER OPERATION

The interior lights (courtesy lights and footwell lights) are lit instantly by the UCH:
– when a door or the tailgate is opened,
– when the opening elements are unlocked with the remote control (or the hands-free function),
– when the Renault Card is removed from the reader.

The UCH switches the interior lights off after a delay
– switch off without delay:
  ● when the opening elements are locked using the remote control (opening elements closed)

– switch off with delay:
  ● after the last opening element is closed,
  ● when the opening elements are unlocked with the remote control,
  ● when the ignition is switched on (gradually).

NOTE:
If an opening element is left open for a long time without the ignition being switched on or off, the UCH switches off the interior lights after a **45-minute** delay (approximately).

GETtheMANUALS.org

COURTESY LIGHTS

Depending on the position of the courtesy light and the vehicle equipment, the lighting may have:
– a single central lighting switch;
– a central lighting switch and a map reading light;
– a central lighting switch and two map reading lights;
– a central lighting switch with dimmer and two map reading lights.

REMOVAL - REFITTING

To remove the ceiling courtesy light:
– unclip the translucent cover (1);
– pull out the mounting bolts (2);
– rotate to release the connector.

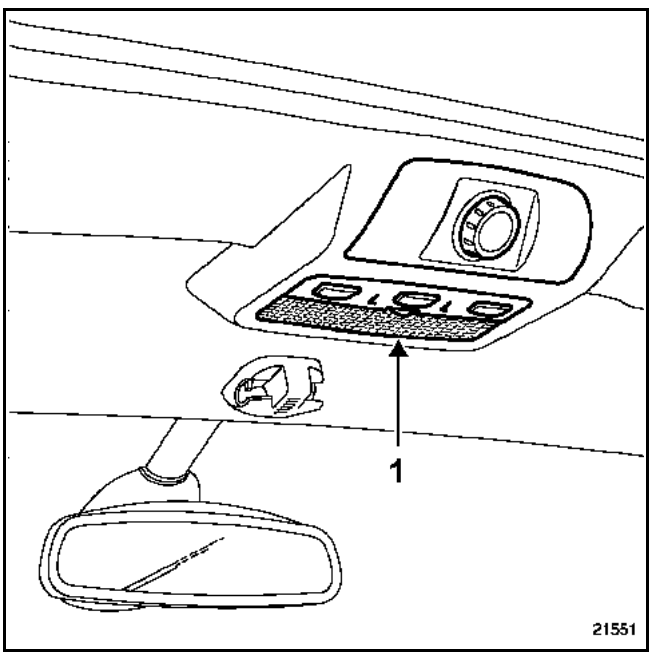

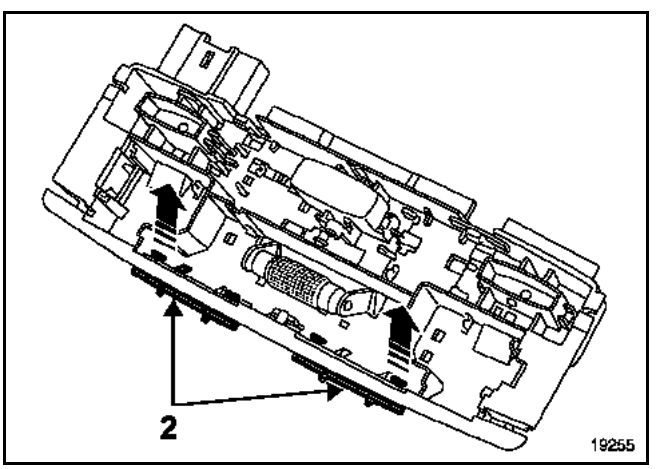

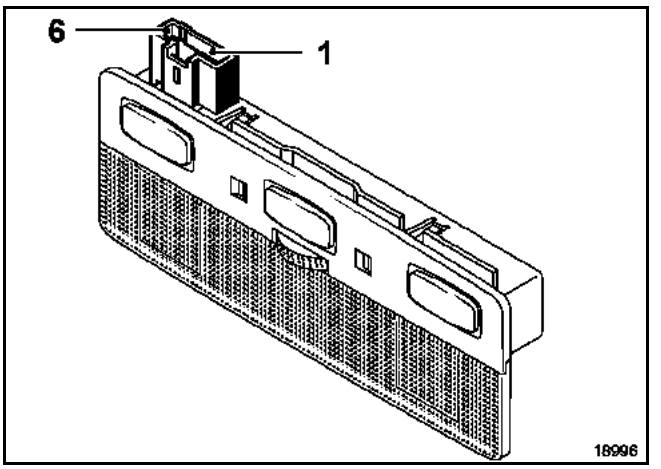

CENTRAL COURTESY LIGHT

Track	Description
1	Not used
2	Signal from the UCH
3	Rear courtesy light link (rheostat)
4	+ lighting
5	Permanent +
6	Earth

REAR COURTESY LIGHT

Track	Description
1	Not used
2	Signal from the UCH
3	Rear courtesy light link (rheostat)
4	+ lighting
5	Permanent +
6	Earth

GETtheMANUALS.org

Depending on the version, the vanity mirrors may be fitted with a light incorporated into the headlining.

The switch is located on the mirror cover (1) on the sun visor (2). The current is transmitted to the light (3) by the central mounting (4) of the sun visors.

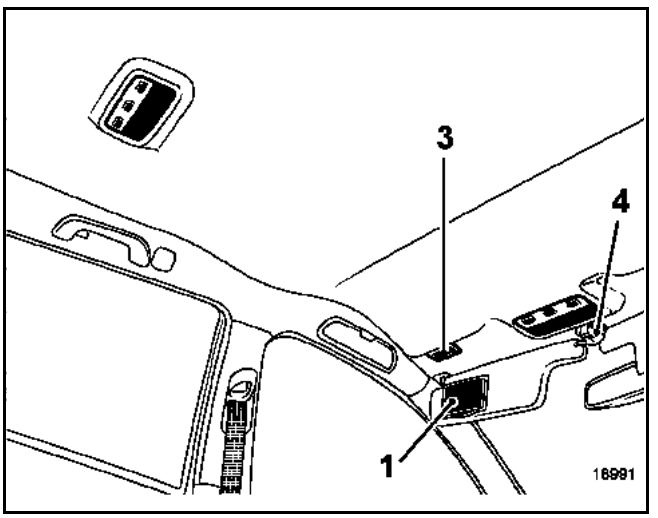

NOTE: It is possible to check the switch's operation by connecting a multimeter at (5):

- mirror cover closed (switch open) = light off = infinite resistance,
- mirror cover open (switch closed) = light on = zero resistance.

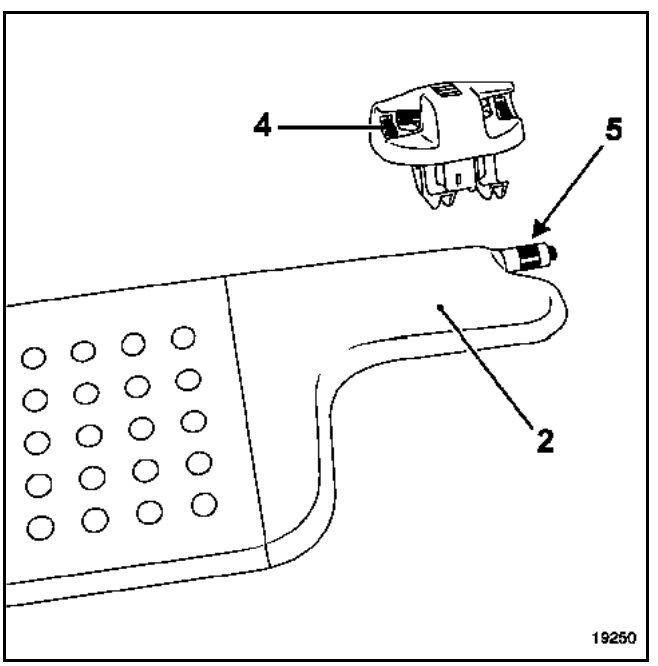

GETtheMANUALS.org

DESCRIPTION

The relay/fuse box is clipped onto the UCH on the driver's side of the dashboard.

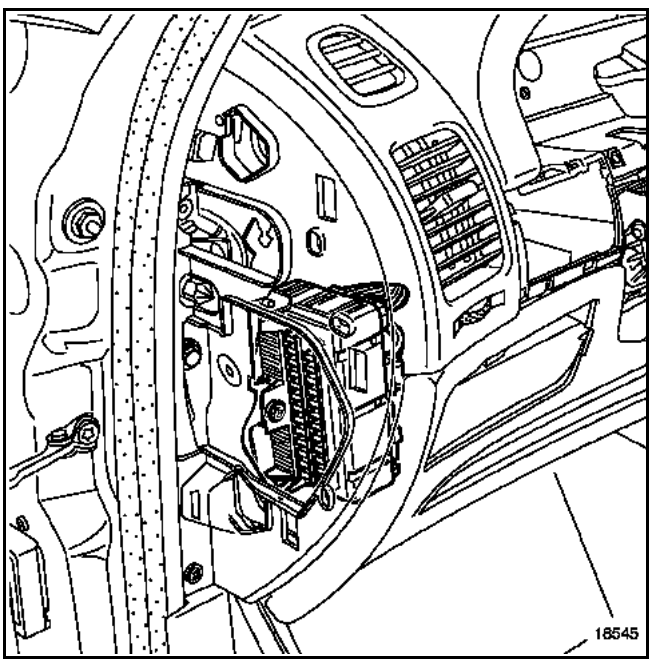

Fuses and shunts fitted in the relay/fuse box, depending on vehicle equipment. They must be positioned in the same place on the new component.

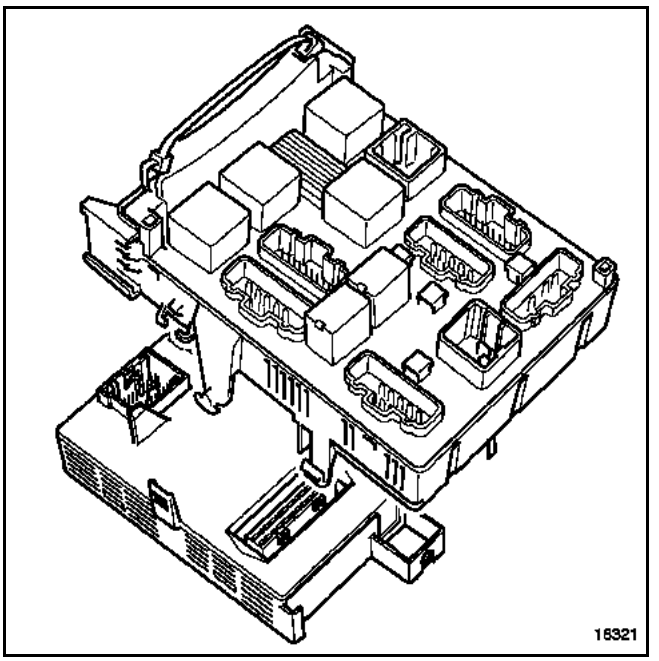

GETtheMANUALS.org

REMOVAL

NOTE:
- It is essential to read the configurations using the diagnostic tool when replacing the UCH;
- the relay/fuse box is clipped onto the UCH. One has to be removed to remove the other.

Disconnect the battery.

Remove:
– the dashboard side panel, driver's side;
– the cover under the dashboard;
– the handle of the automatic handbrake fastened by bolts (A);
– the mounting for the beam height adjustment control (**clipped**);

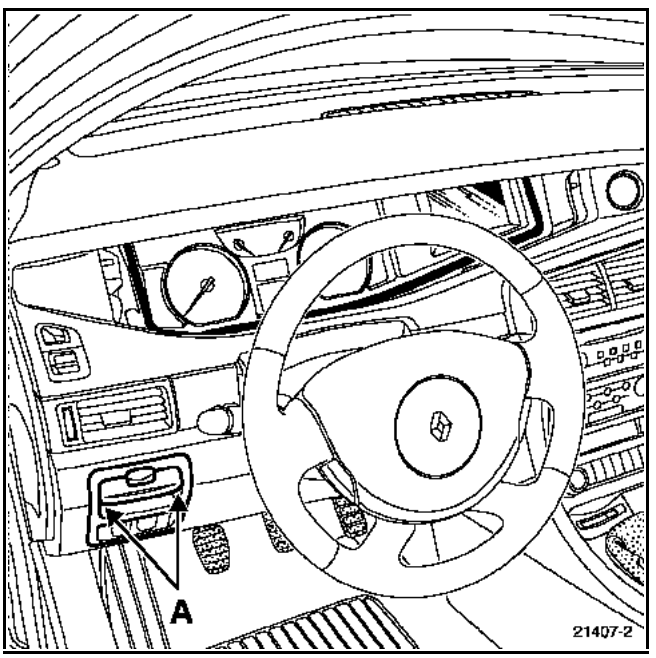

– the clutch pedal travel sensor, by proceeding as follows:
  - disconnect the connector;
  - unlock the section linked to the pedal by moving the bolt (1), and slide it (2);
  - unlock the sensor body by moving the bolt (3);

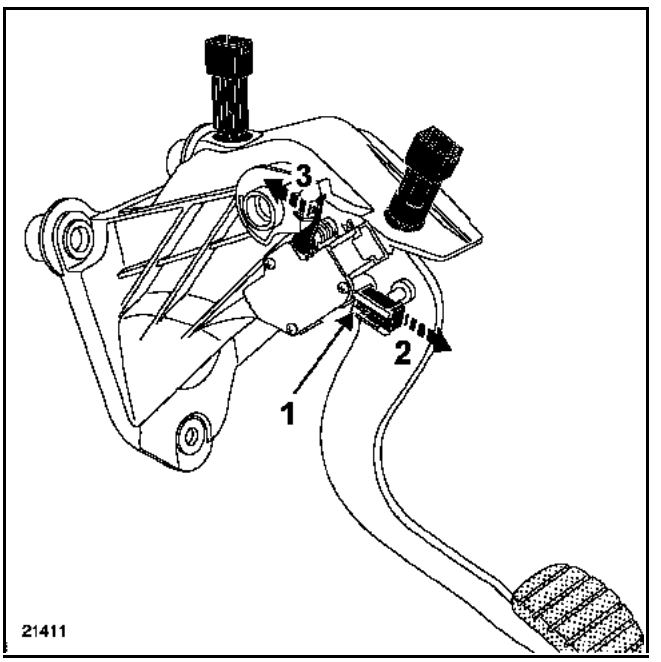

  - tilt the sensor (4), taking care not to break the lower retaining bracket (5).

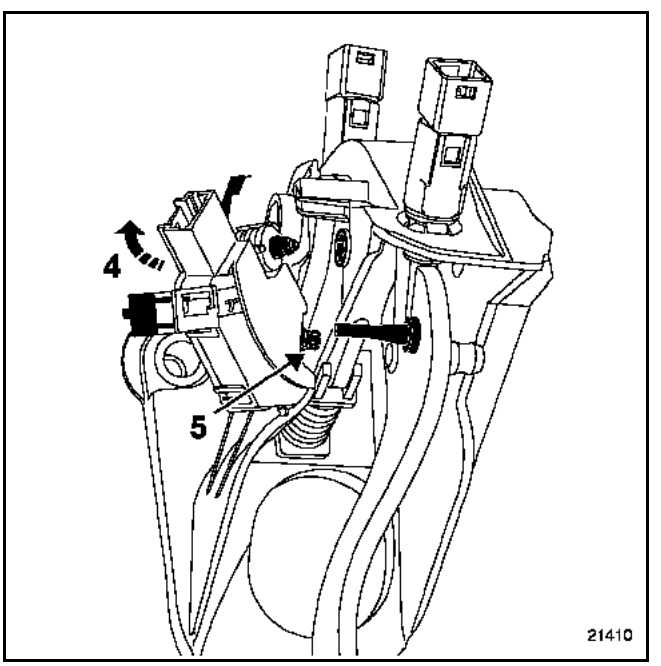

GETtheMANUALS.org

Remove mounting bolt (B) from the UCH.

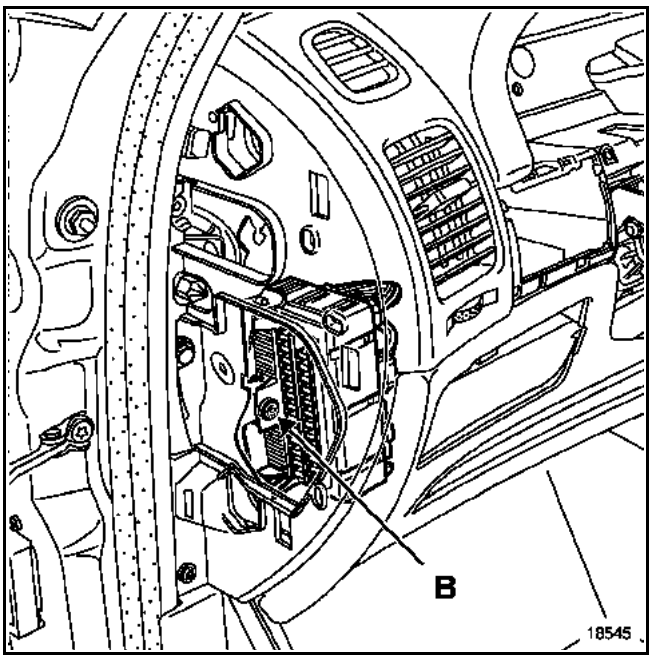

Cut the plastic clip (C) holding the wiring harness.

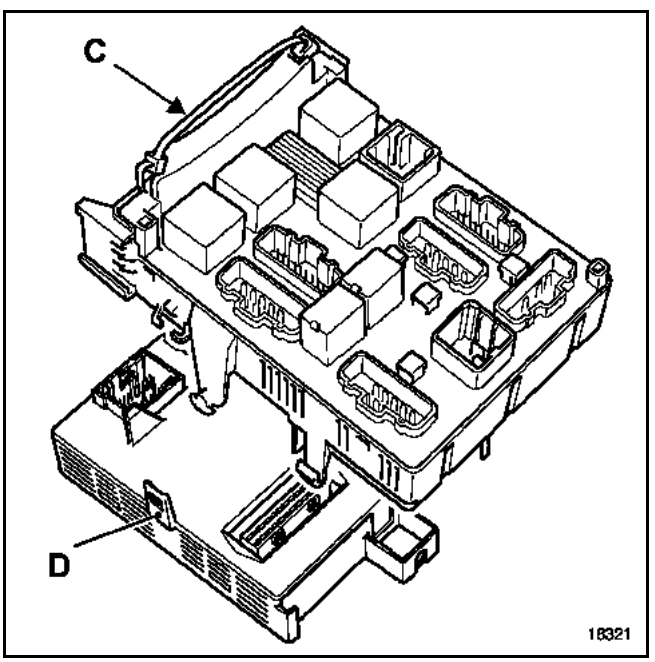

Disconnect the UCH and the fuse and relay box connectors.

Separate the UCH and the fuse and relay box by pressing on the bolts (D).

REFITTING

On the new part, place the relays and shunts in their original position.

Reconnect the wires and fit a large clip (C) to keep the harness firmly in place.

GETtheMANUALS.org

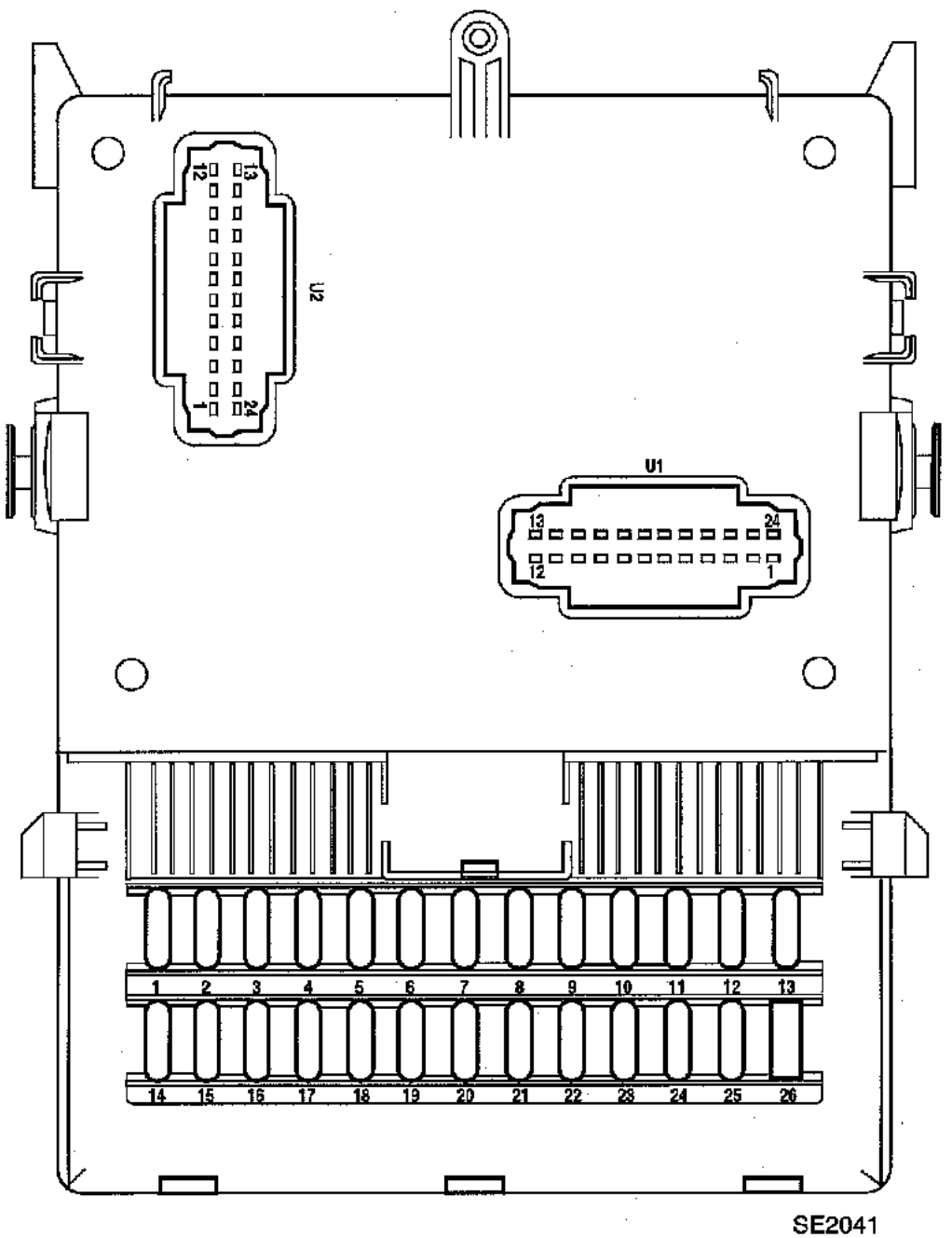

GETtheMANUALS.org

FUSE SYMBOLS

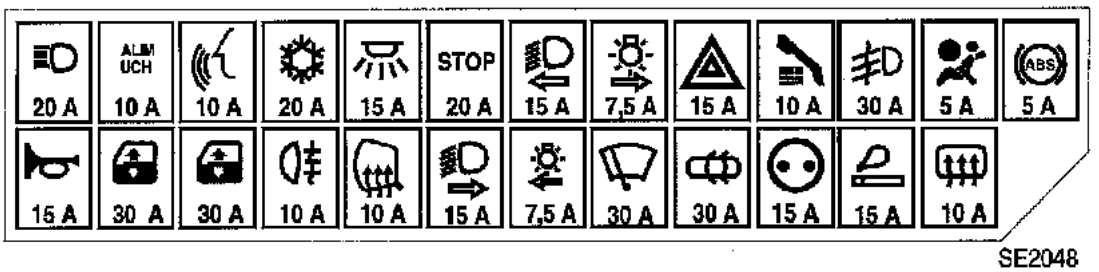

ALLOCATION OF FUSES (DEPENDING ON EQUIPMENT LEVEL)

No.	Symbol	Rating	Description
F1		20A	Headlight main beam
F2	ALIM UCH	10A	UCH power supply - Fuse/relay box power supply - Transponder - Card reader - Start push button - Automatic handbrake
F3		10A	Voice synthesiser - Xenon lamp beam height adjustment - Instrument panels - Defrost jets - Cruise control with distance limiter - Discharge bulb computers
F4		20A	Reversing lights - Heating and air conditioning - Parking assistance - Alarm + after ignition feed signal - Lighting controlled by electric locks - Rain sensor - Auto-dimming rear-view mirrors
F5		15A	Time-delayed interior lighting - Front seat belt retractor computer
F6	STOP	20A	Brake lights - Wiper stalk - Diagnostic socket - Tyre pressure monitor display - Child proof locks indicator light - Rear electric door locks indicator light - Electric window switch lighting
F7		15A	Left-hand dipped beam headlight - Discharge bulb computer
F8		7.5 A	Right-hand side light
F9		15A	Hazard warning lights and indicators
F10		10A	Communication system - Radio - Memorised driver's position settings
F11		30A	Voice synthesiser - Instrument panel - Front fog lights - Tailgate electric striker plate - Air conditioning
F12		5A	Airbags and pretensioners
F13	ABS	5A	ABS computer - Electronic Stability Program
F14		15A	Audible alarm (beeper)
F15		30A	Driver's side front window lift - Electric door mirrors

GETtheMANUALS.org

No.	Symbol	Rating	Description
F16		30A	Passenger's electric window
F17		10A	Rear fog light
F18		10A	De-icing door mirrors
F19		15A	Right-hand dipped headlight
F20		7.5 A	Left-hand side lights - Dimmer controlled and glove compartment lighting - Number plate lighting
F21		30A	Rear screen and windscreen wipers
F22		30A	Central door locking
F23		15A	Console accessories socket - Carphone
F24		15A	Cigarette lighter
F25		10A	Steering column lock - Heated rear screen

Consumer cut-off fuse

This fuse is located under the ashtray, in the central console.

No.	Rating	Description
F50	20A	Consumer cut-off **fuse**: Diagnostic socket Radio Air conditioning computer Seat position memory computer Radio display/clock/external temperature control panel Navigation assistance computer Tyre pressure computer Central Communication Unit Alarm connection

GETtheMANUALS.org

ALLOCATION (DEPENDING ON EQUIPMENT LEVEL)

U1 (24-track connector)

Track	Description
1	Electric central door locking output
2	Electric central door locking output
3	Front left-hand side light shunt input
4	Not used
5	Front right-hand side light shunt input
6	Number plate lighting shunt input
7	Right-hand side light fuse fault input
8	Left-hand side light fuse fault input
9	Not used
10	Dipped beam headlight input
11	Rear right-hand side light shunt input
12	Not used
13	Not used
14	Relay and fuse box supply input
15	Not used
16	Stop lights fault input
17	Rear left-hand side light shunt input
18	Not used
19	Left-hand brake light shunt input
20	Electric central door locking output
21	Right-hand brake light shunt input
22	Brake switch input
23	Electric central door locking output
24	Electric central door locking output

U2 (24-track connector)

Track	Description
1	Rear screen wiper relay output
2	Relayed + after ignition input
3	Relayed idle + after ignition input
4	Relayed + after ignition output
5	Central door locking supply input
6	Not used
7	Not used
8	Electric central door locking relay output (opening)
9	Relay plate 2 output
10	Electric central door locking relay output (closing)
11	Relay plate 1 output
12	Indicators input
13	UCH earth
14	Not used
15	Left-hand indicator control output
16	Indicators input
17	Right-hand indicator control output
18	Not used
19	Indicators supply input
20	Main beam headlights relay output
21	Starting inhibition relay output
22	Side lights input
23	Timed supply relay output
24	UCH supply input

GETtheMANUALS.org

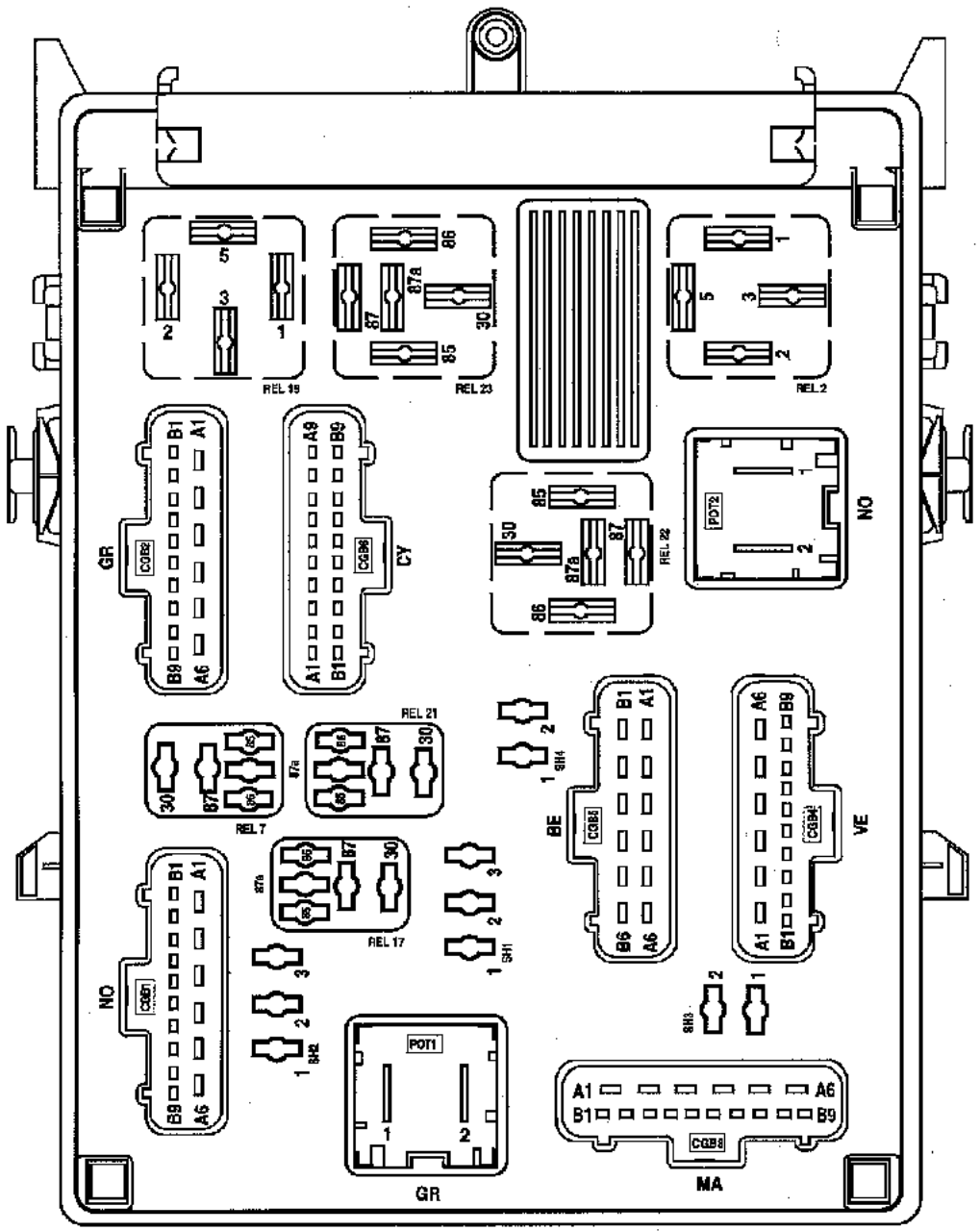

GETtheMANUALS.org

ALLOCATION (DEPENDING ON EQUIPMENT LEVEL)

CGB1 (15-track connector) BLACK

WHITE

Track	Description
A1	Not used
A2	+ front fog lights
A3	+ front fog lights relay
A4	+ accessories, passenger compartment fan
A5	Not used
A6	protected + battery (caravan connection)

BLACK

Track	Description
B1	central door locking protected + battery feed
B2	ABS/ESP protected + after ignition feed
B3	Airbag protected + after ignition feed
B4	Not used
B5	Protected + accessories, electric steering column lock
B6	Not used
B7	Protected + accessories, radio
B8	Protected + accessories, cigarette lighter
B9	Protected + accessories, cigarette lighter

CGB2 (15-track connector) GREY

WHITE

Track	Description
A1	Protected + battery feed (air conditioning)
A2	Protected + battery feed (air conditioning)
A3	Protected + accessories (air conditioning control panel)
A4	Central door locking closing + control
A5	Central door locking opening + control
A6	Earth

BLACK

Track	Description
B1	Earth
B2	Rear door exterior interior unlocking control
B3	Driver's rear exterior locking control
B4	Rear interior locking control
B5	Front interior locking control
B6	Front interior driver's exterior unlocking control
B7	Side light + lighting feed
B8	Not used
B9	Boot lighting timer + control

GETtheMANUALS.org

ALLOCATION (DEPENDING ON EQUIPMENT LEVEL)

CGB3 (15-track connector) BROWN

WHITE

Track	Description
A1	+ dipped beam
A2	Not used
A3	Not used
A4	Not used
A5	Horn fuse + control
A6	Rear fog light fuse + control

BLACK

Track	Description
B1	+ right-hand dipped headlight
B2	+ left-hand dipped headlight
B3	Door mirror de-icing fuse protected + control
B4	Rear fog light protected + control
B5	Not used
B6	Passenger's/driver's electric window battery protected + accessories feed
B7	Interior lighting - control
B8	Driver's electric window protected battery + feed
B9	Horn + control

CGB4 (15-track connector) GREEN

WHITE

Track	Description
A1	Not used
A2	Rear function locking relay control
A3	Rear electric window battery or after ignition feed
A4	Rear electric window relay control
A5	Not used
A6	Heated rear screen + control

BLACK

Track	Description
B1	fuse protected + battery feed
B2	Not used
B3	Accessories fuse protected after ignition feed
B4	Rear screen wiper + control
B5	Not used
B6	Interior lighting timer + control
B7	Rear right-hand side light + control
B8	Front right-hand side light + control
B9	Heated rear screen relay - control

GETtheMANUALS.org

ALLOCATION DEPENDING ON EQUIPMENT LEVEL

CGB5 (12-track connector) BLUE

WHITE

Track	Description
A1	Protected + battery feed
A2	Not used
A3	+ after ignition
A4	Central door locking protected + battery feed
A5	Not used
A6	Protected + battery feed

BLACK

Track	Description
B1	Earth
B2	+ side lights
B3	+ starting
B4	Side lights relay control (running lights)
B5	Not used
B6	Dipped beam relay control (running lights)

CGB6 (18-track connector) CRYSTAL

WHITE

Track	Description
A1	Not used
A2	Heated rear screen control fuse protected + after ignition feed
A3	Heated rear screen control fuse protected + after ignition feed
A4	Not used
A5	Not used
A6	Not used
A7	Flasher unit timed + control
A8	Left-hand direction indicator control
A9	Right-hand direction indicator control

BLACK

Track	Description
B1	+ main beam
B2	Not used
B3	Brake lights fuse protected + after ignition feed
B4	Number plate lighting + control
B5	Rear left-hand side light + control
B6	Front left-hand side light + control
B7	Brake lights control
B8	Right-hand brake light + control
B9	Left-hand brake light + control

GETtheMANUALS.org

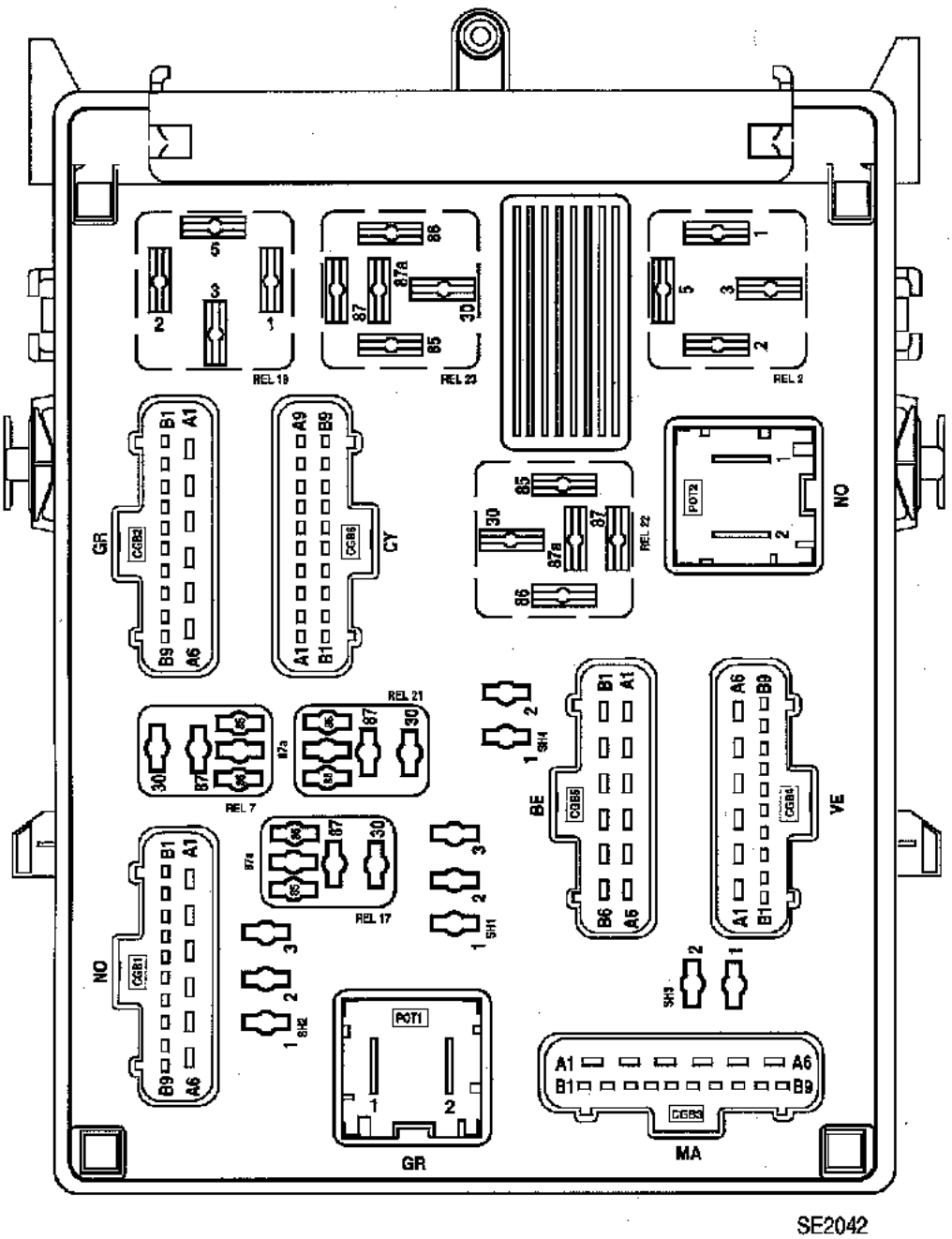

GETtheMANUALS.org

ALLOCATION (DEPENDING ON EQUIPMENT LEVEL)

Track	Description
REL 2	**Relay:** heated rear screen
REL 7	**Relay:** front fog lights
REL 9	**Relay:** windscreen wiper
REL 10	**Relay:** windscreen wiper
REL 11	**Relay:** reversing lights / rear wiper
REL 12	**Relay:** door lock
REL 13	**Relay:** door locking
REL 18	**Relay:** timed interior lighting
REL 19	**Relay:** relay plate
REL 21	**Relay:** starting inhibition
REL 22	**Relay:** + after ignition feed / ECU
REL 23	**Relay:** accessories, rear electric window/after-sales fitted radio
SH 1	**Shunt:** rear electric window
SH 2	**Shunt:** front electric window
SH 3	**Shunt:** daytime running lights
SH 4	**Shunt:** daytime running lights

GETtheMANUALS.org

This fuse box is located on the relay/fuse box.

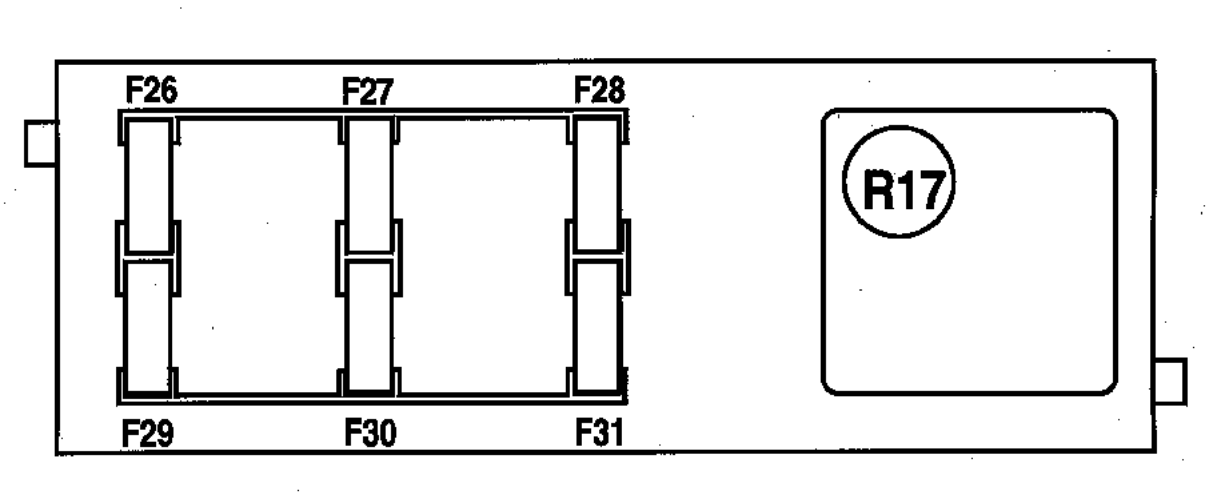

SE2050

Allocation of fuses and relays (depending on equipment level)

No.	Rating	Description
F26	**30A**	**Fuse:** caravan socket
F27	**30A**	**Fuse:** sunroof
F28	**30A**	**Fuse:** rear left-hand electric window
F29	**30A**	**Fuse:** rear right-hand electric window
F30	**5A**	**Fuse:** steering wheel angle sensor
F31	**-**	Not used
R17		**Relay:** electric window

GETtheMANUALS.org

The Option relay/fuse box (A) is located passenger side in the front of the glove compartment.

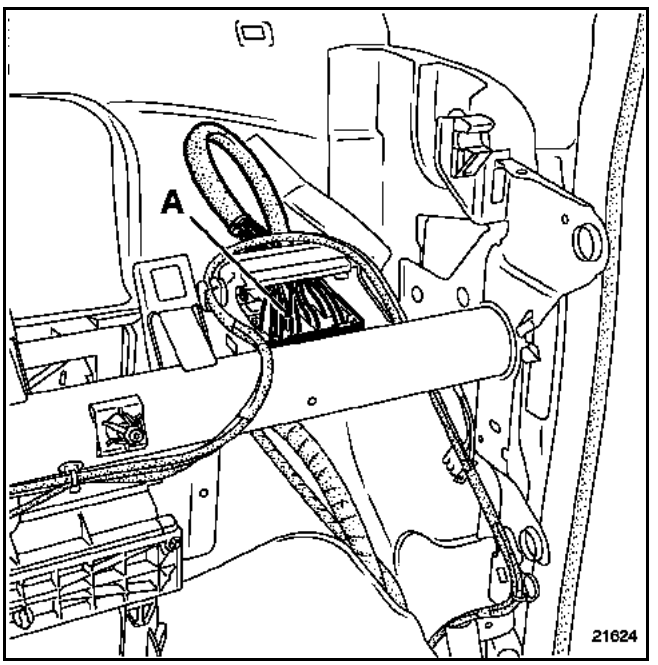

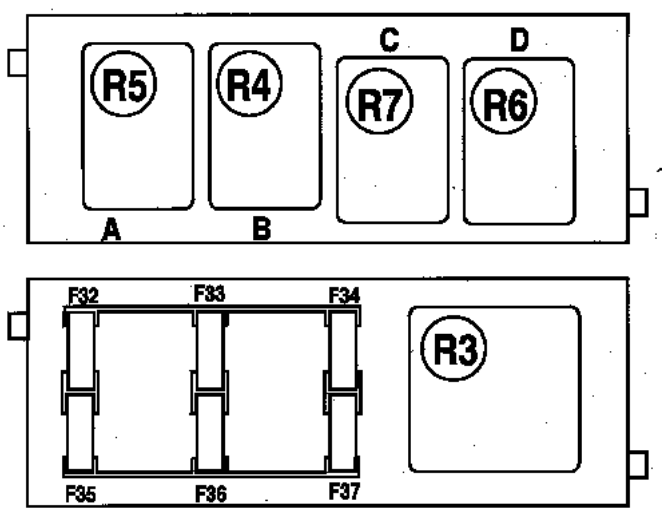

ALLOCATION OF FUSES AND RELAYS (DEPENDING ON EQUIPMENT LEVEL)

No.	Rating	Description
F32	**-**	Not in use
F33	**-**	Not in use
F34	**15A**	**Fuse:** driver's electric seat supply
F35	**20A**	**Fuse:** driver's and passenger's heated seats
F36	**20A**	**Fuse:** driver's electric seat
F37	**20A**	**Fuse:** passenger's electric seat
R3		**Relay:** seat supply
R4		**Relay:** side light for daytime running lights
R5		**Relay:** dipped beam for daytime running lights
R6		**Relay:** headlight washer pump
R7		**Relay:** brake lights cut-off

GETtheMANUALS.org

Engine side

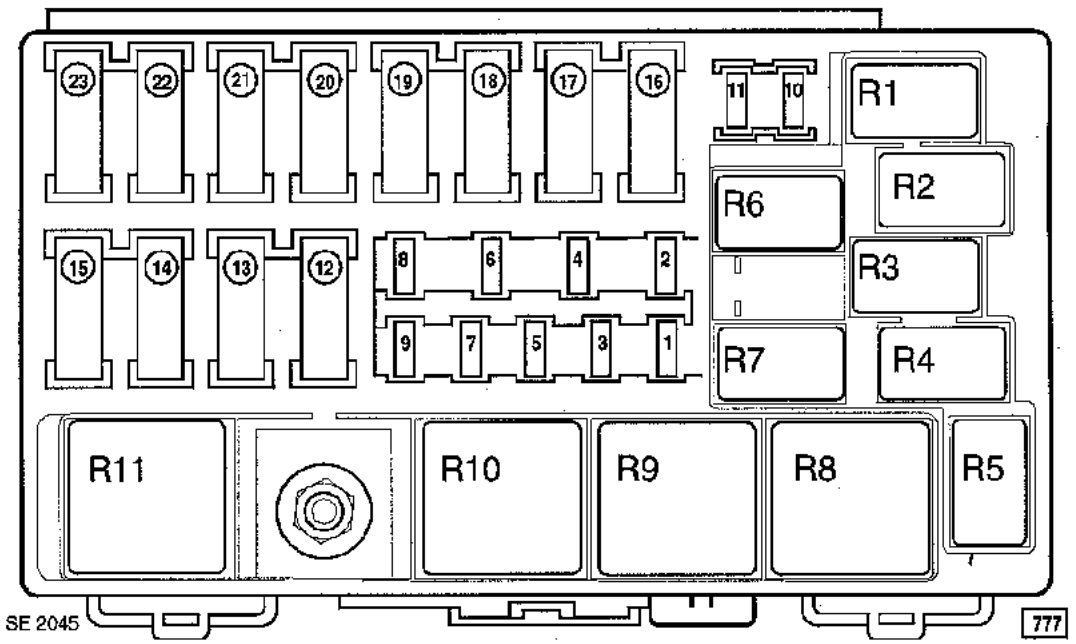

ALLOCATION OF FUSES (DEPENDING ON EQUIPMENT LEVEL)

No.	Rating	Description
F1	**7.5A**	**Fuse:** automatic gearbox
F2	**10A**	**Fuse:** independent heating
F3	**30A**	**Fuse:** injection relay
F4	**5A-15A**	**Fuse:** automatic gearbox
F5	**30A**	**Fuse:** additional heating - Diesel heater relay
F6	**10A**	**Fuse:** injection computer - Diesel heater
F7	**-**	Not in use
F8	**-**	Not in use
F9	**20A**	**Fuse:** fan slow speed/air conditioning
F10	**20A***	**Fuse:** ABS computer/Electronic Stability Program
F11	**30A**	**Fuse:** horn
F12	**70A**	**Fuse:** diesel pre-heating
F13	**70A**	**Fuse:** thermoplungers
F14	**70A**	**Fuse:** thermoplungers
F15	**60A**	**Fuse:** fan slow and fast speeds
F16	**40A**	**Fuse:** headlight washer - Defrosting relay
F17	**40A**	**Fuse:** ABS computer/Electronic Stability Program
F18	**70A**	**Fuse:** passenger compartment
F19	**70A**	**Fuse:** passenger compartment
F20	**60A**	**Fuse:** passenger compartment
F21	**60A**	**Fuse:** consumer cut-out fuse supply
F22	**80A**	Not in use
F23	**60A**	**Fuse:** front windscreen wiper and automatic handbrake

* Some vehicles are fitted with a 30A fuse. If replacing it, fit a 20A fuse in its place.

GETtheMANUALS.org

Engine side

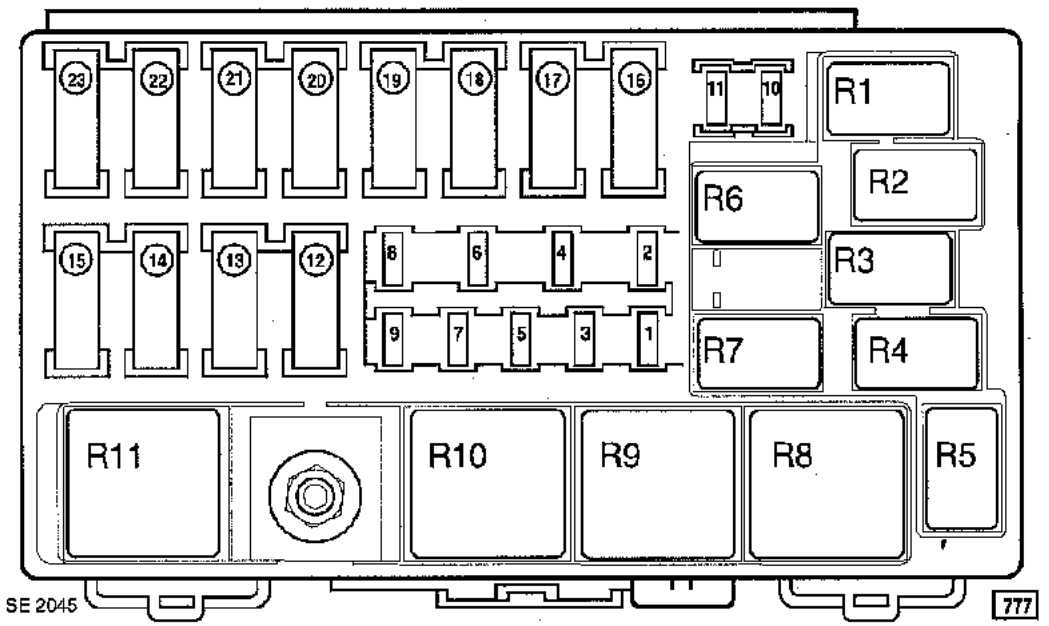

ALLOCATION OF RELAYS (DEPENDING ON EQUIPMENT LEVEL)

F4R - G9T engines

No.	Description
R1	**Relay:** additional heating
R2	**Relay:** fan assembly low speed
R3	Not in use
R4	Not in use
R5	**Relay:** additional heater
R6	**Relay:** fuel pump
R7	**Relay:** diesel fuel heater
R8	**Relay:** injection locking
R9	**Relay:** fan assembly low speed
R10	**Relay:** fan assembly
R11	**Relay:** additional heater

V4Y engine

No.	Description
R1	Not in use
R2	**Relay:** fan assembly
R3	Not in use
R4	Not in use
R5	Not in use
R6	**Relay:** injection
R7	**Relay:** motorized throttle body safety
R8	**Relay:** injection locking
R9	**Relay:** fan assembly
R10	**Relay:** fan assembly
R11	Not used

GETtheMANUALS.org

Engine side

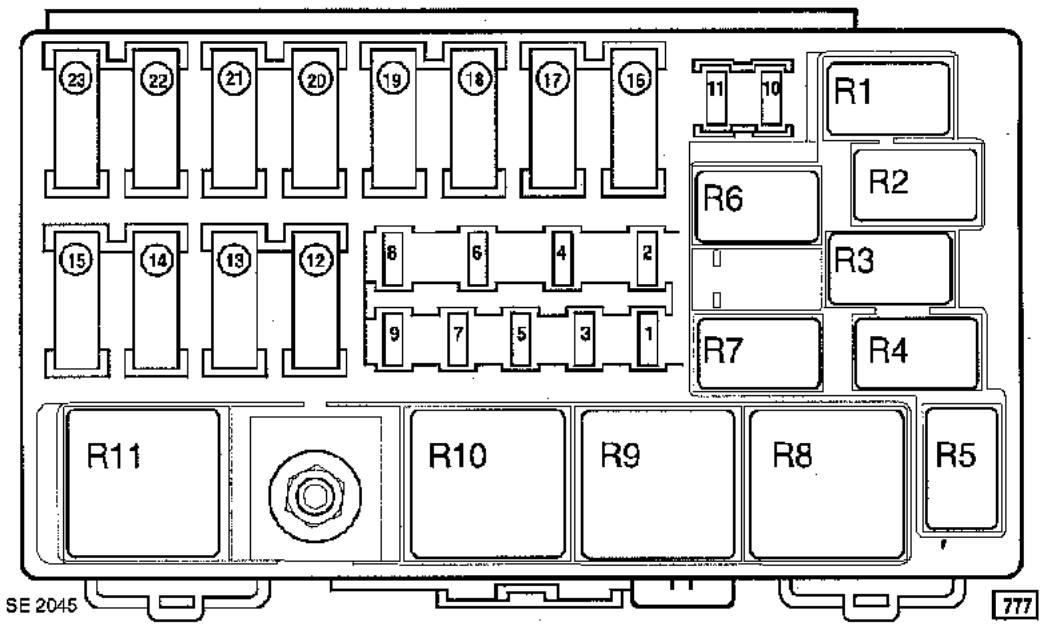

ALLOCATION OF RELAYS (DEPENDING ON EQUIPMENT LEVEL)

P9X engine

No.	Description
R1	**Relay:** additional heater 1
R2	**Relay:** fan assembly with air conditioning
R3	Not in use
R4	Not in use
R5	**Relay:** additional heater 3
R6	Not in use
R7	**Relay:** diesel heating
R8	**Relay:** injection locking
R9	**Relay:** fan assembly with air conditioning
R10	**Relay:** fan assembly with air conditioning
R11	**Relay:** additional heater 2

GETtheMANUALS.org

Special notes

- The security code no longer exists but has been replaced by a repair code allocated to the vehicle for life during manufacture:
– no numbers are written on the RENAULT Card,
– at the time of delivery, the vehicle does not have a label showing the code.

When repairing this system, this repair code number can be requested from the local assistance network (**refer to Technical Note 3315E**).

When requesting the code number, it is now essential to provide the vehicle's VIN as well as its fabrication number. This allows the operator to identify the vehicle in order to provide the correct code.

- Renault Cards are fitted with a backup key (1) enabling the door to be opened in the event of an operating fault. Replacement RENAULT Cards are supplied non-coded and without an emergency metal key. The rechargeable battery for the hands-free function is charged. A green cover is fitted in the place of the backup key. When replacing a RENAULT Card, it is necessary to replace the green cover with the customer's backup key and fit the green cover on the faulty RENAULT Card in case it should need to be returned for analysis.

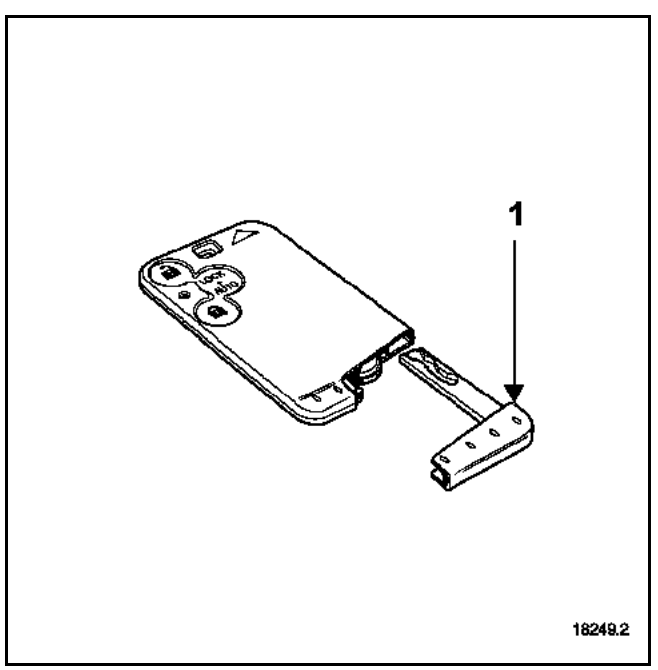

NOTE: a backup key can be ordered at Parts Stores by quoting the vehicle security number.

- This system can have up to four Renault Cards. The remote control function, the battery and the rechargeable battery (on the hands-free version) have no effect on the engine immobiliser.

- This system can, depending on the version, be combined with a RENAULT Card with the hands-free function. **The car cannot have more than one RENAULT Card with the hands-free function.**

- In the event of a card being stolen or lost or upon the customer's request, a RENAULT Card can be unallocated from a vehicle. It can be reassigned to the same vehicle if necessary.

- **IMPORTANT:**
  With this system, it is not possible to replace more than one (UCH and RENAULT Cards or UCH and injection computer) at the same time. These parts are sold uncoded.

It is not possible to code these components when replacing them, if none of them has the vehicle's original code in its memory (see allocation table).

- There is no way of erasing the code programmed into the system components. **The programmed code cannot be erased.**

GETtheMANUALS.org

GENERAL

It consists of an engine immobiliser system controlled by a RENAULT Card with random rolling code recognition system.

A coded chip (operating without a battery) independent of the remote control function is incorporated into each of the vehicle's RENAULT Cards.

The engine immobiliser is active a few seconds after the RENAULT Card is removed from the card reader. Its status is shown by the flashing red light on the instrument panel and by the locking of the electric steering column lock.

During manufacture, a 12-character hexadecimal code is allocated to the vehicle to make the engine immobiliser operational.

This repair code is required in After-Sales to:
– add RENAULT Cards,
– replace one or more RENAULT Cards,
– unallocate one or more RENAULT Cards (e.g. if lost or stolen),
– replace a UCH.

NOTE: To obtain the repair code, it is essential to know the vehicle identification number. There are several ways depending on the country (refer to **Technical Note 3315E**):
– Minitel,
– voice server,
– Techline.

GETtheMANUALS.org

SYSTEM PRESENTATION

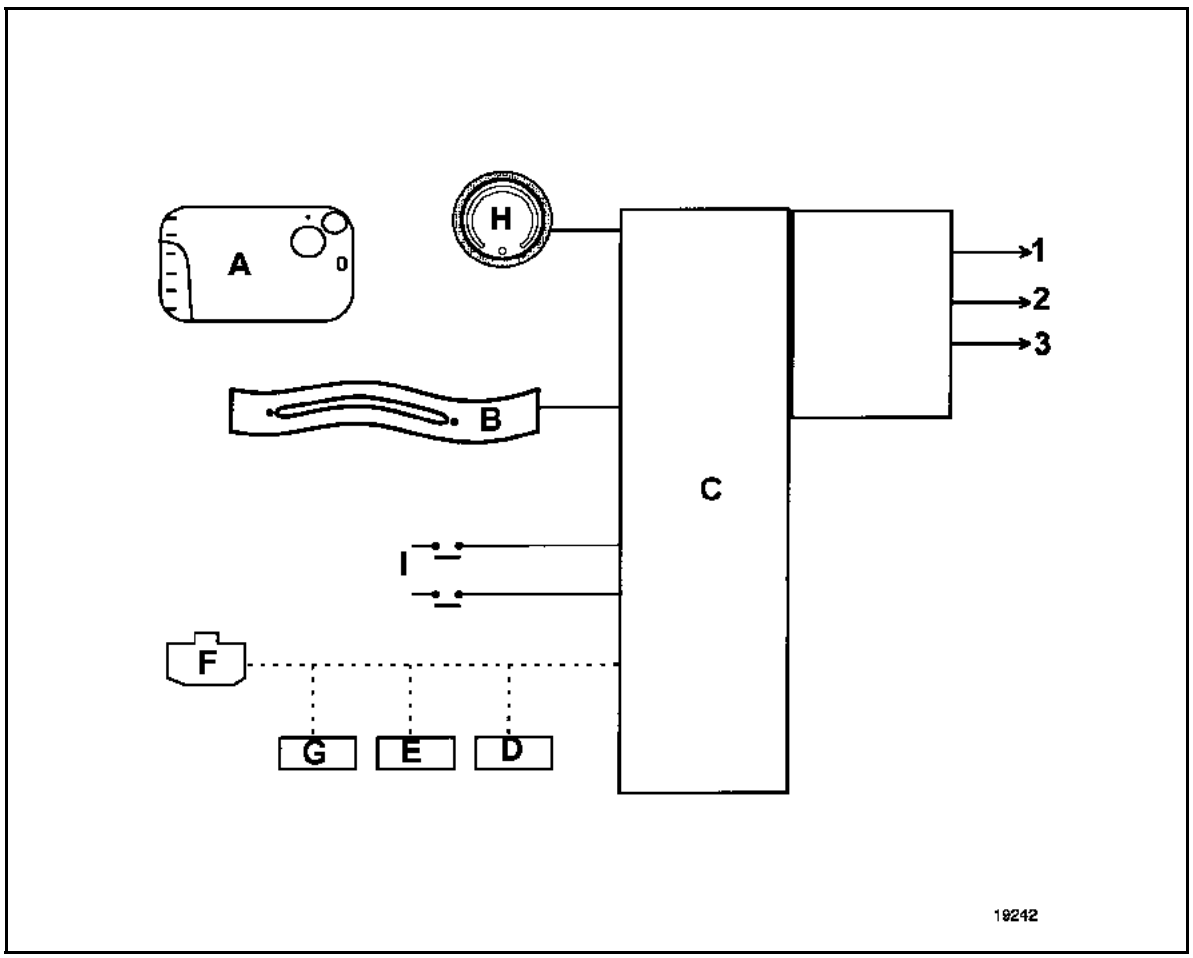

A	RENAULT Card
B	RENAULT Card reader containing the engine immobiliser receiver and radio frequency
C	UCH and relay fuse box
D	Engine immobiliser red indicator light (instrument panel)
E	Injection computer (petrol or diesel)
F	Electric steering column lock
G	Diagnostic socket
H	Engine start/stop button
I	Clutch pedal and gearbox neutral position sensors

- - - - - - Multiplex connection
——— Wire connection

1	+ accessories position (accessories feed)
2	+ after ignition feed position
3	Starter motor supply

GETtheMANUALS.org

SYSTEM DESCRIPTION

With this system, the engine immobiliser is activated several seconds after the ignition is switched off (shown by the red engine immobiliser light flashing and the locking of the electric steering column lock).

The system comprises:

- two specific RENAULT Cards (A) fitted with a coded chip used for controlling the engine immobiliser,
  - only one of the RENAULT Cards can have the hands-free function,
  - two further cards can be added (maximum of four),
- an engine immobiliser receiver located in the card reader (B), fitted with electronics for transmitting the code of the RENAULT Cards to the UCH (C).

  NOTE: The RENAULT Card reader is not coded.

- a UCH (C) located under the dashboard on the driver's side.

  For the engine immobiliser function, the UCH carries out the following functions:
  - decodes the signal of the RENAULT Card from the card reader,
  - controls the engine immobiliser by sending a code to the electric steering lock,
  - communicates with the injection computer,
  - operates the engine immobiliser indicator light and the card reader light,
  - communicates with the diagnostic tool.

  NOTE: Refer to **section 87B** for the other functions controlled by the UCH.
- an engine immobiliser warning light (D) located on the instrument panel indicating:
  - activation of the engine immobiliser,
  - non-recognition of the RENAULT Card,
  - a system fault,
  - a problem with the injection computer or the electric steering lock.
- a coded injection computer (E).
- a diagnostic socket (G) used for fault finding operations and configuring the system.
- a coded electric steering column lock (F).
- clutch pedal and gearbox position sensors (I) and a stop/start button (H) to supply the starter.

GETtheMANUALS.org

OPERATION

When the engine immobiliser is operational, the engine immobiliser indicator light flashes (slowly: once a second). The electric steering column lock is locked.

- Once the RENAULT Card is inserted into the reader, the code of the RENAULT Card is sent to the UCH.
- If the code is recognised by the UCH, it sends a coded signal to the electric steering column lock via the multiplex network.
- If the coded signal received by the electric lock is identical to the one it has in its memory, the lock releases the steering column and sends a confirmation message to the UCH.
- When the UCH receives this message, it applies the + after ignition feed and switches off the red engine immobiliser indicator light.
- When the ignition is on, the UCH and the injection computer send coded signals to each other via the multiplex network.
- If the signals issued by the UCH and the injection computer match, the UCH authorises the engine to start and the injection is unlocked.

SPECIAL CASES

- If the injection computer or the electric steering column lock do not have a stored reference code: the code which is sent is entered into the memory.
- If the codes do not match, the system remains locked. The engine immobiliser indicator light flashes (quickly). The vehicle is not authorised to start and the electric steering column lock remains locked.
- If the indicator light is on, without the presence of + after ignition feed, there is a problem with the vehicle electric steering column lock.
- If the indicator light is on, with the presence of + after ignition feed, there is a problem with the vehicle injection.

IMPORTANT: when the vehicle battery has a low charge, the drop in voltage caused by operating the starter may set the immobiliser. If the voltage is too low, the engine cannot be started, even by pushing the vehicle.

GETtheMANUALS.org

REPLACEMENT AND CONFIGURATION OFTHE UCH

New parts are not coded. Once fitted on the vehicle, they must be programmed with a code to become operational.

To perform this procedure, it is essential that some parts on the vehicle are already correctly coded (with the vehicle code). Refer to the allocation table.

WARNING: If a part is programmed with a code, the part is then allocated to the vehicle and the code cannot be erased nor can the part be programmed with a second code. **The programmed code cannot be erased.**

ALLOCATION TABLE

AFTER-SALES OPERATION	COMPONENT STATUS				REPAIR CODE NEEDED
	UCH	RENAULT Card	Injection computer	Electric steering column lock	
Programming the UCH	Blank	Coded	Coded	-	YES
Allocation or de-allocation of a RENAULT Card	Coded	Blank*	Coded	-	YES
Programming the electric steering column lock	Coded	Coded	-	Blank	NO
Programming the injection computer	Coded	Coded	Blank	Coded	NO

* The RENAULT Card allocated to a vehicle must be blank or already programmed on this vehicle.
NOTE: a card may be programmed on a vehicle but not operational (not allocated).

REMINDER: only the RENAULT Cards used during the allocation process will be operational.

GETtheMANUALS.org

REPLACEMENT AND CONFIGURATION OFTHE UCH

A new UCH is not programmed with a code. You must therefore program a code into a new UCH fitted to a vehicle to make the UCH operational.

To perform this procedure, at least one of the vehicle's old RENAULT Cards and the repair code are required and the injection computer must be correctly coded (refer to the allocation table).

WARNING: if a code is programmed into the UCH, the UCH is assigned to the vehicle and it is impossible to erase the code or program in another one.

IMPORTANT: RENAULT Cards submitted during this procedure will only work if:
– they have already been coded on this vehicle,
– or they are new (not coded).

UCH PROGRAMMING PROCEDURE

- Set up a dialogue with the **Engine immobiliser** system.
- In the **Command**, **Specific command** menu, select and confirm **SC027: program UCH** line.
- The tool displays **Please enter the After-Sales code** .
  With no card in the reader , enter the secret After-Sales code (12 hexadecimal characters) and confirm it.
- If the code format is correct, the tool displays **Insert a card which has already been programmed on the vehicle**, and the programming procedure will commence.
- The tool displays **UCH programmed**; the UCH is coded. You must now enter RENAULT Card programming mode to assign the other cards (maximum of four). Several seconds may elapse before this message appears.

WARNING: the maximum time between each operation is **2 minutes**, otherwise the procedure will be cancelled and the tool will display the message **Procedure interrupted: warning, the cards assigned to the vehicle are the ones assigned before performing the procedure. The cards submitted before interruption of the procedure are no longer blank and can only be assigned to this vehicle**. This message also appears where dialogue with the UCH is lost or the battery power supply fails.

SPECIAL CASES

If the screen displays:
- **Remove the card from the reader**, a card is already present in the reader,
- **Verify the After-Sales code and ensure that the card belongs to the vehicle:** the code has not been read correctly or the UCH has already been coded on another vehicle. Verify the code then retry input.
- **Do you want to check the cards before assigning them to the vehicle?** the UCH is already coded on this vehicle, the UCH enters RENAULT Card reallocation mode.
- **Card not usable on this vehicle:** the card code does not correspond to the current vehicle.
- **The card inserted is blank. Please insert another card which has already been programmed on the vehicle:** insert a card which has already been coded.
- **UCH Programming failure:** repeat the whole procedure.

WARNING: when a UCH has been programmed with the RENAULT Card code, it is impossible to erase it or to store another code in its place.

GETtheMANUALS.org

UCH PROGRAMMING PROCEDURE

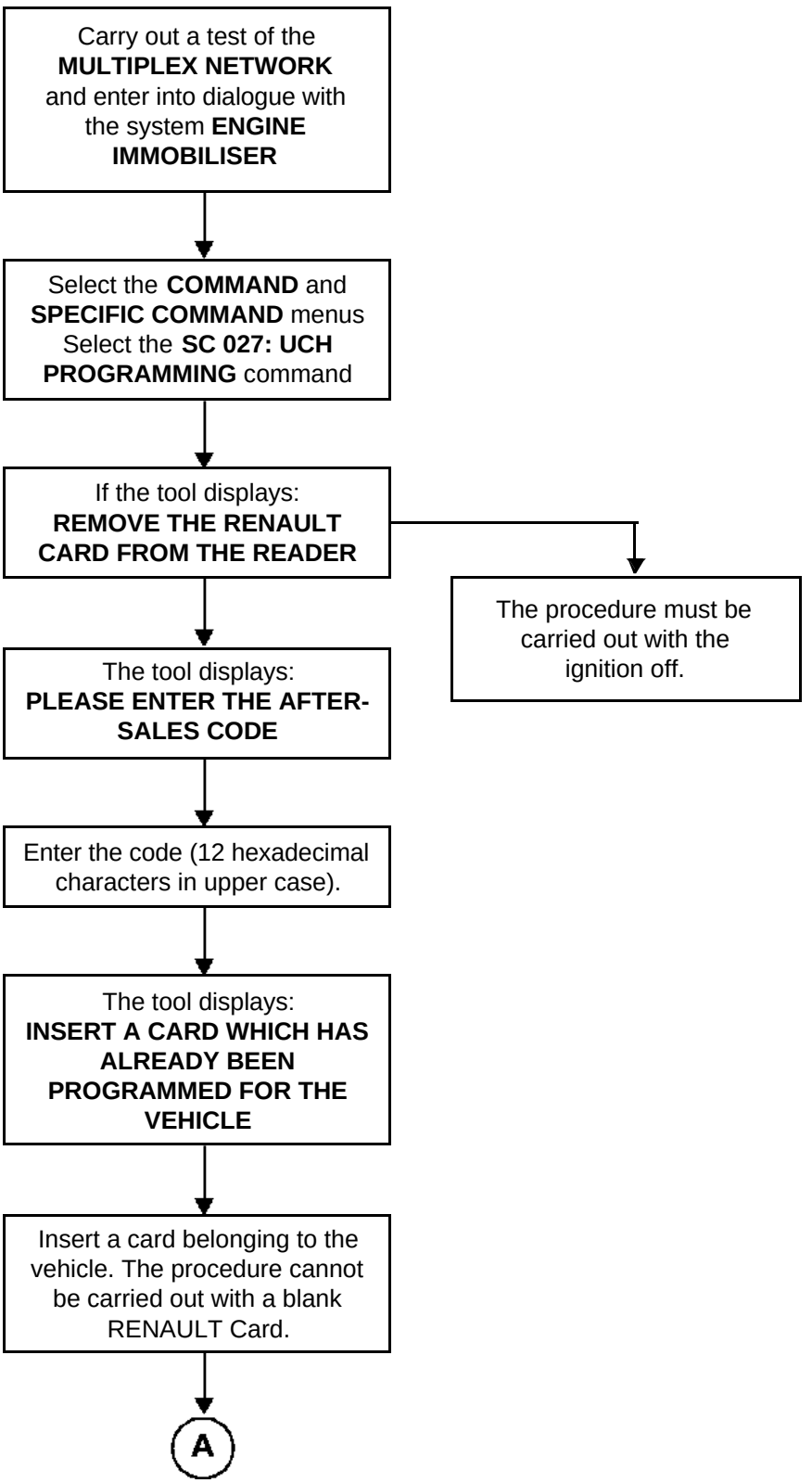

GETtheMANUALS.org

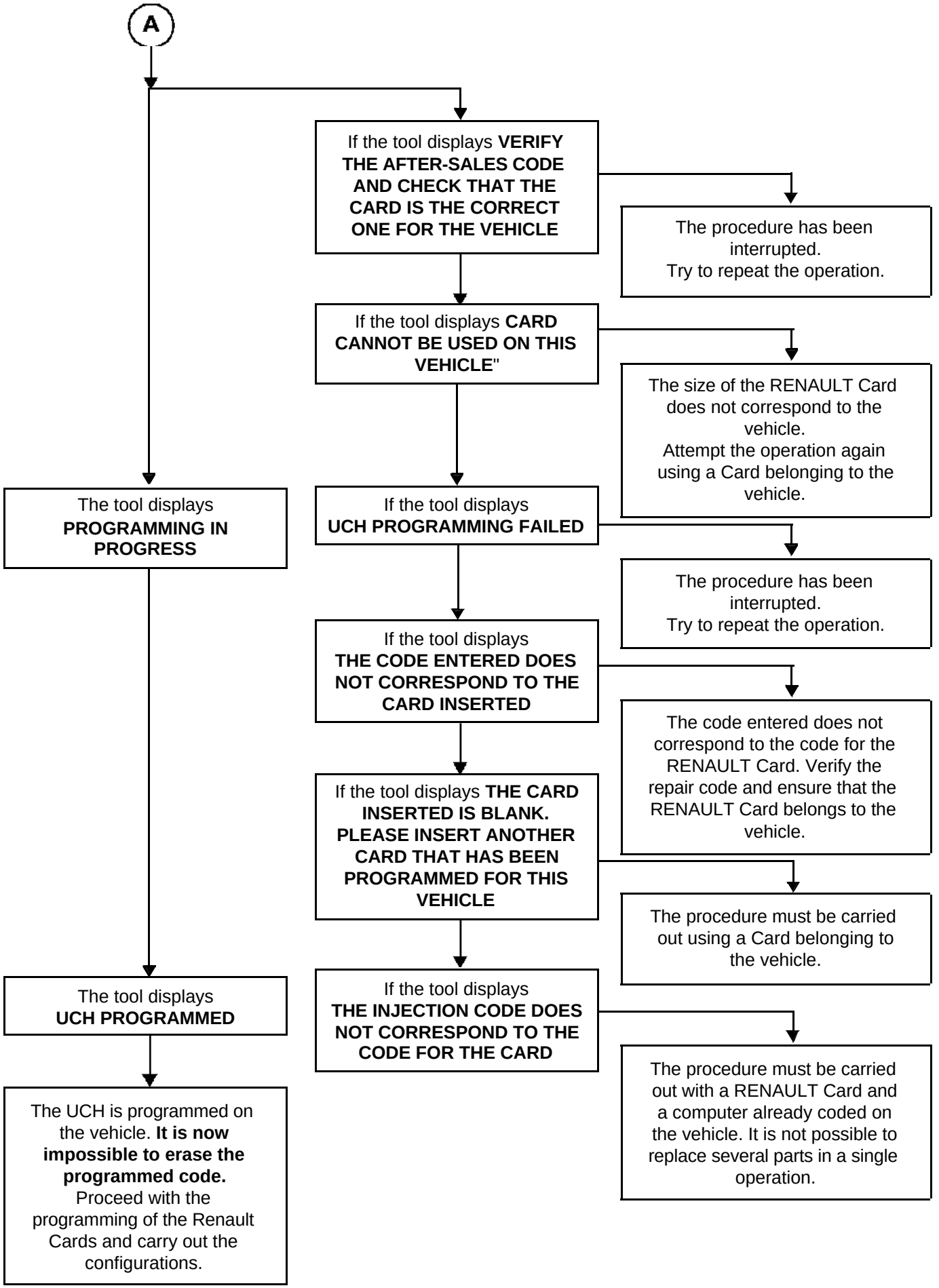

GETtheMANUALS.org

RENAULT CARD ALLOCATION PROCEDURE

NOTE: it is possible to find out whether a Renault Card is blank or not by using the state: **ET115: blank card**.

IMPORTANT: in the event that not all the RENAULT Cards are available, it will be necessary to carry out a subsequent reallocation procedure using all the cards.

- Confirm the **SC001: Card programming** line in the **Specific command** item of the **Command** menu.

- The screen displays **Do you want to check the cards before assigning them to the vehicle?**

- If you want to check the cards, the tool displays **Insert the card fully into the reader**. Insert a RENAULT Card until the ignition is switched on:
  - If the allocation is not possible, the screen displays **Verify the After-Sales code and make sure the card belongs to the vehicle**. Insert another card.
  - If the card is accepted, the screen displays **Remove the card from the reader**.

- The tool displays **Insert the card fully into the reader**. Insert a RENAULT Card fully into the reader and confirm:
  - If the RENAULT Card is not accepted, the red indicator light remains off.
  - If the RENAULT Card is accepted, the red indicator light flashes rapidly and the tool displays **1 card programmed** then **Remove the card from the reader**.

- The tool displays **Insert the card fully into the reader**. Insert a second RENAULT Card until the ignition is switched on:
  NOTE: If the same RENAULT Card is submitted twice, the system does not acknowledge the second card and the immobiliser indicator light remains off.

- Insert the RENAULT Card or the other Cards to be assigned to the vehicle (maximum of 4) into the Card reader. The screen displays **2, 3 or 4 cards programmed** then **Remove the card from the reader**.

WARNING: these must be old RENAULT Cards for the vehicle or new **uncoded** RENAULT Cards.

NOTE: the vehicle can only accept a single RENAULT Card with the hands-free function. If a second RENAULT Card is assigned to the vehicle, it will function as an ordinary RENAULT Card.

WARNING: the maximum time between each operation is **five minutes**, otherwise the procedure will be cancelled and the tool will display the message **Procedure interrupted: warning, the cards assigned to the vehicle are the ones assigned before the procedure was performed. The cards submitted before interruption of the procedure are no longer blank and can only be assigned to this vehicle**. This message also appears where dialogue with the UCH is lost or the battery power supply fails.

- **Configure the UCH in accordance with the vehicle options and equipment** (refer to **section 87**).

NOTE: there is no operation to perform on the injection computer when the UCH alone is replaced, it retains the same immobiliser code.

GETtheMANUALS.org

RENAULT CARD ALLOCATION PROCEDURE

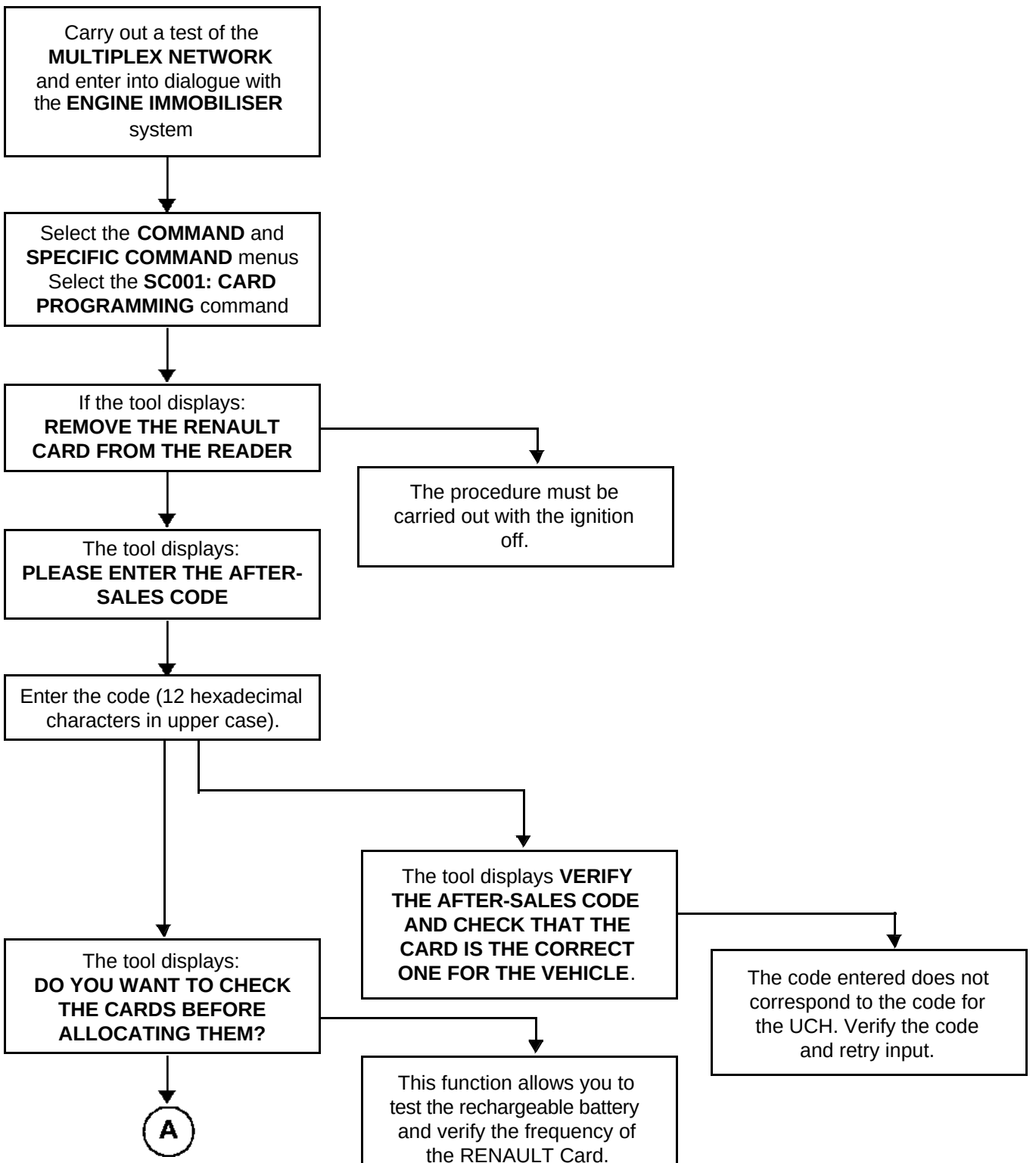

GETtheMANUALS.org

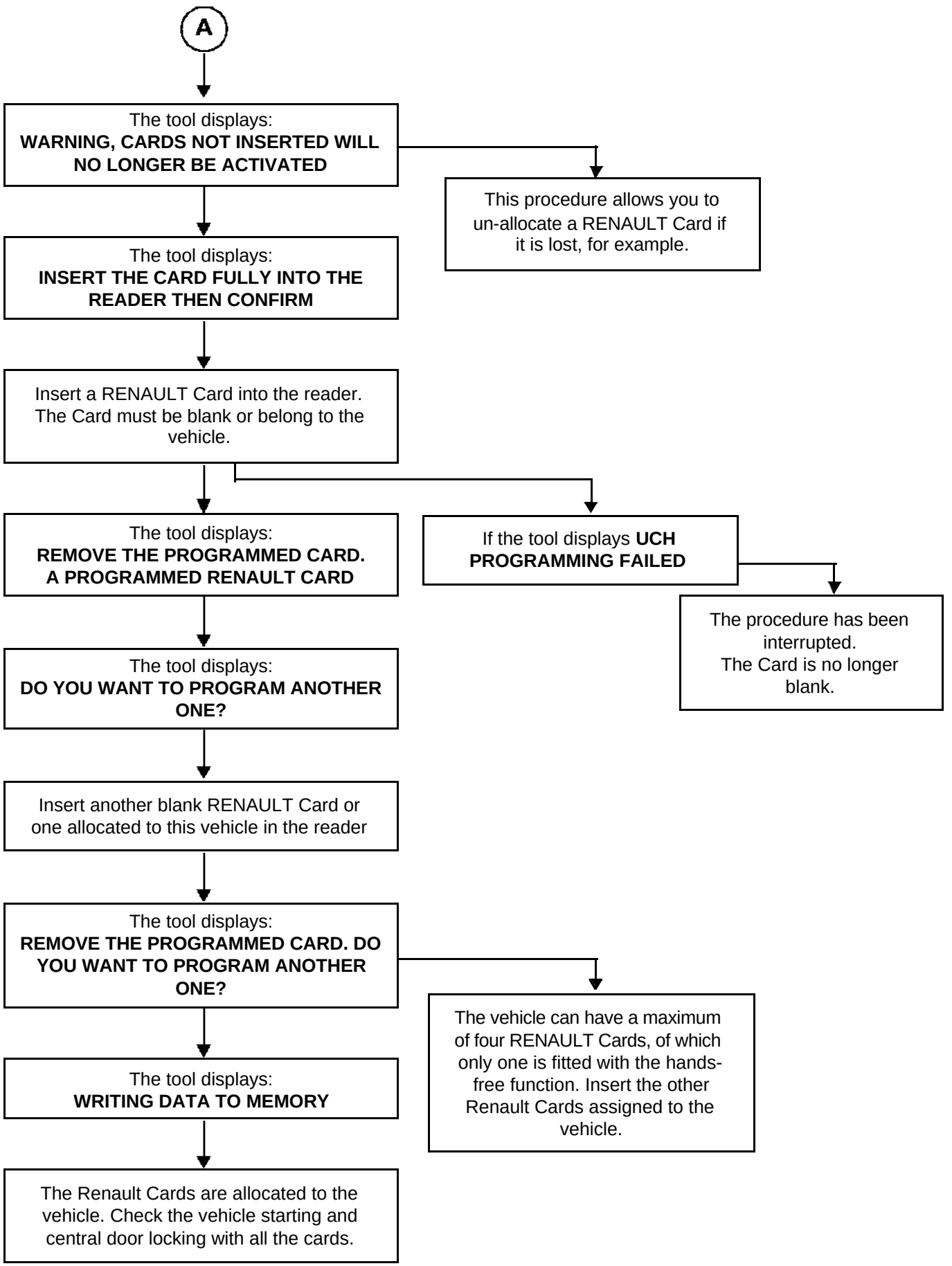

GETtheMANUALS.org

CODING THE INJECTION COMPUTER

The injection computer is supplied uncoded. It therefore has to be programmed with the engine immobiliser code when it is installed to allow the vehicle to be started.

Simply switch on the ignition for a few seconds without starting the engine. Switch the ignition off, the immobiliser will be activated after a few seconds.

Checking

The status of the injection computer can be ascertained using the diagnostic tools:

1 Select and confirm **Passenger compartment connection unit**
2 Select the **STATUS** menu and check:
- if the computer is not coded, the state **ET111 Injection blank** is active,
- if the computer is coded, the state **ET111 Injection blank** is not confirmed.

IMPORTANT:

With this engine immobiliser, the vehicle keeps its immobiliser code for life.
In addition, this system does not have a security code.

Consequently, it is forbidden to carry out tests with injection computers borrowed from stores and subsequently returned.

The programmed code cannot be erased.

GETtheMANUALS.org

The RENAULT Card reader contains two contacts which control vehicle operation:
– a contact located half-way into the card slot, which controls power supply to accessories (+ ACCESSORIES),
– a contact at the end of the card slot (+ AFTER IGNITION).

NOTE: the RENAULT Card is locked in the reader once the UCH has received the **engine running** signal from the injection computer. It is released when the engine is stopped.

A specific configuration means that RENAULT Cards are not locked on vehicles with automatic transmission.

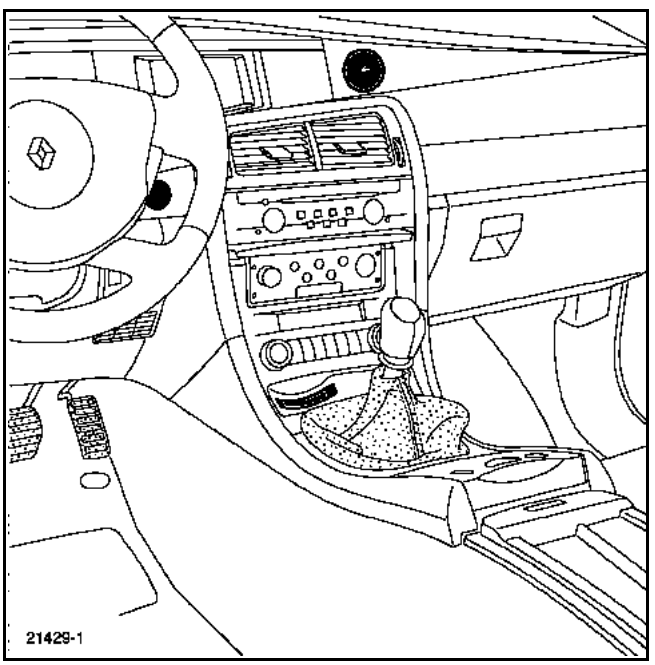

The RENAULT Card reader is used:
– to act as a radio frequency receiver for locking and unlocking the doors,
– as a transponder aerial for the engine immobiliser function and recognition of the RENAULT Card.

Operation of the reader lighting:

- When the doors are unlocked, the reader lights up for approximately **30 seconds**.
- If the reader lights up when a RENAULT Card is inserted, this signifies that the code corresponds to the code stored in the UCH.
- If the reader flashes quickly (at the same frequency as the engine immobiliser indicator light) when a RENAULT Card is inserted, this means that the code has not been recognised by the UCH.
- The reader lights up after the engine is switched off.
- If the RENAULT Card is in the reader when a door is open (engine off), the reader flashes as a reminder.

NOTE: The reader must be replaced if the reader light develops a fault.

REMINDER: the card reader is not coded.

Refer to **section 84A** for removal operations and reader track allocations.

GETtheMANUALS.org

The steering column lock is located at the base of the steering column. It is controlled by the UCH.
This lock is coded by the UCH and cannot be made blank again.

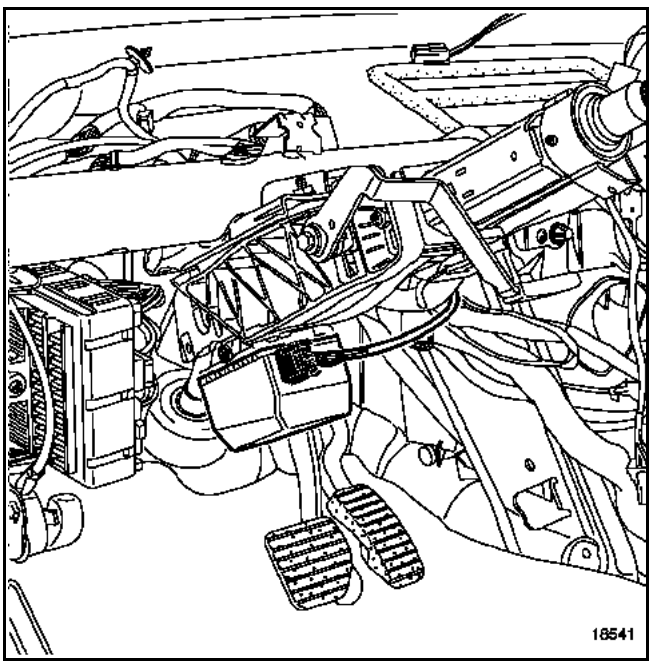

OPERATION

The steering is unlocked when the RENAULT Card is fully inserted into the reader and the transponder is recognised by the UCH.
The steering is locked when the RENAULT Card is fully withdrawn from the reader, the engine is stopped and the vehicle speed is zero.

NOTE: if the UCH has received an **impact** signal from the air bag computer, the steering column lock remains unlocked.

NOTE: a faulty or disconnected steering column lock prevents the engine from being started.

NOTES:
- If the lock does not release when the RENAULT Card is inserted into the reader, the engine immobiliser indicator light comes on but the + after ignition feed is not established.
- If the retaining lock of the device is released when the car is moving, the **Stop** and engine immobiliser indicator lights come on (the steering wheel does not lock).
- If an internal switch develops a fault, the service warning light comes on.

PRECAUTIONS DURING REPAIR

Proceed as follows to prevent the steering lock from being applied when the battery is disconnected:
- if the vehicle is not fitted with a navigation system, insert the RENAULT Card fully (+ after ignition) then withdraw it as far as the 1st position (+ accessories feed). The steering column is not locked as long as the card remains in the first position in the reader. Disconnect the battery and the steering column will remain unlocked for as long as the battery remains disconnected and the RENAULT Card inserted.
- lock the air bag computer using a diagnostic tool.

Refer to **section 84A** for the connector allocations.

REMOVAL

WARNING: the steering column lock is secured with a reverse thread bolt (left-hand thread). Furthermore, it can only be removed if it has been released beforehand.

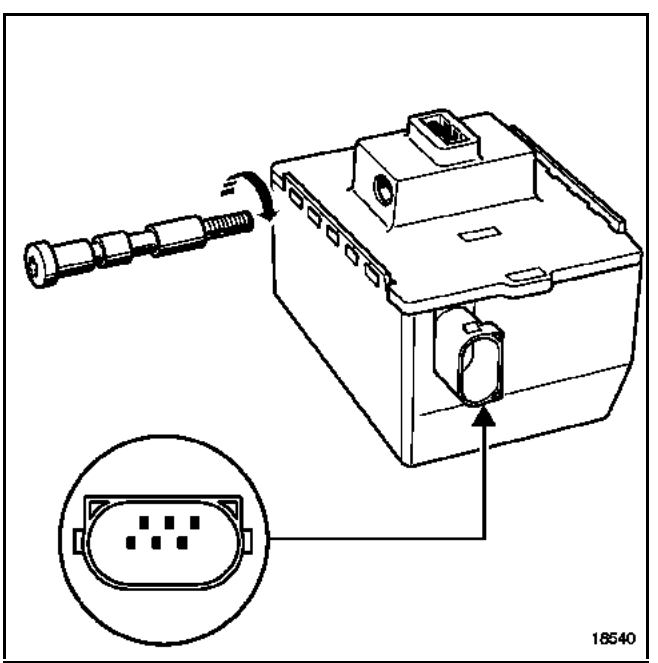

REFITTING

Tighten the bolt to a torque of **0.8 daNm.**

GETtheMANUALS.org

CODING OF THE ELECTRIC STEERING COLUMN LOCK

The electric lock is supplied uncoded. It therefore has to be programmed with the engine immobiliser code when it is fitted to allow the ignition to be switched on.

Simply insert the RENAULT Card into the reader for a few seconds. Remove the RENAULT Card and the engine immobiliser will be activated after a few seconds. The electric lock is coded and the steering column is locked.

IMPORTANT:

With this engine immobiliser, the vehicle keeps its immobiliser code for life.
Furthermore, this system does not have a security code.

Consequently, it is forbidden to perform tests with an electric lock borrowed from the stores which must be returned.

The programmed code cannot be erased.

To check the coding of the electric steering column lock:

- select **Engine immobiliser**
- in the **States** menu, check that the **ET089 steering column lock blank** line has not been confirmed.

GETtheMANUALS.org

DESCRIPTION

The horn is located behind the front bumper on the left-hand side.

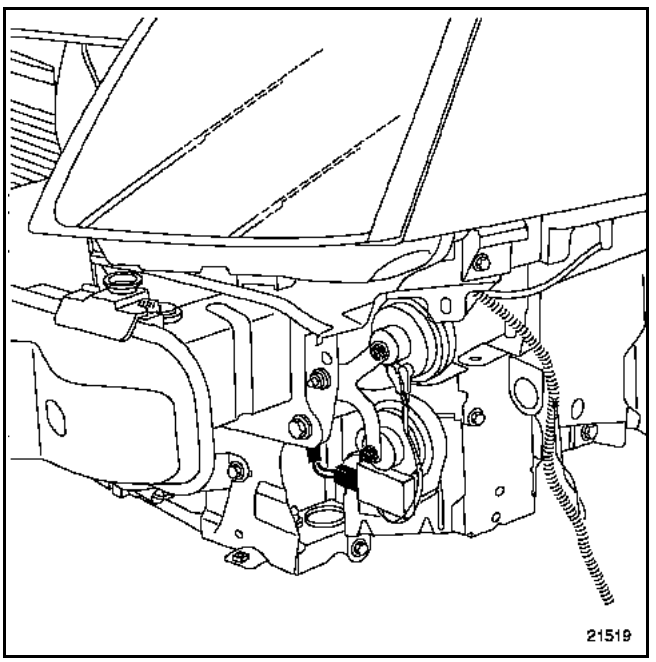

Depending on the model, vehicles can have:
– one or two simple horns,
– two horns controlled by the UCH via a coded line.

These horns are operated:
– when controlled by the lighting stalk,
– via a coded line from the UCH when the doors are closed by the hands-free function (depending on version).

NOTE: the tone as well as the volume of this closing signal can be modified via UCH configuration using diagnostic tools. To do this:

- set up a dialogue with the UCH,
- Open the **command** menu and select and confirm the **configuration** line.

CONNECTION (simple)

Track	Description
A	Supply (stalk)
B	Earth

CONNECTION (coded line)

Track	Description
1	Power supply
2	Earth
3	Control (stalk or UCH)

GETtheMANUALS.org

DESCRIPTION

Vehicles are pre-wired to be fitted with a Renault approved alarm.

The specific connector (A) is located behind the trim, next to the rear left-hand pretensioner.

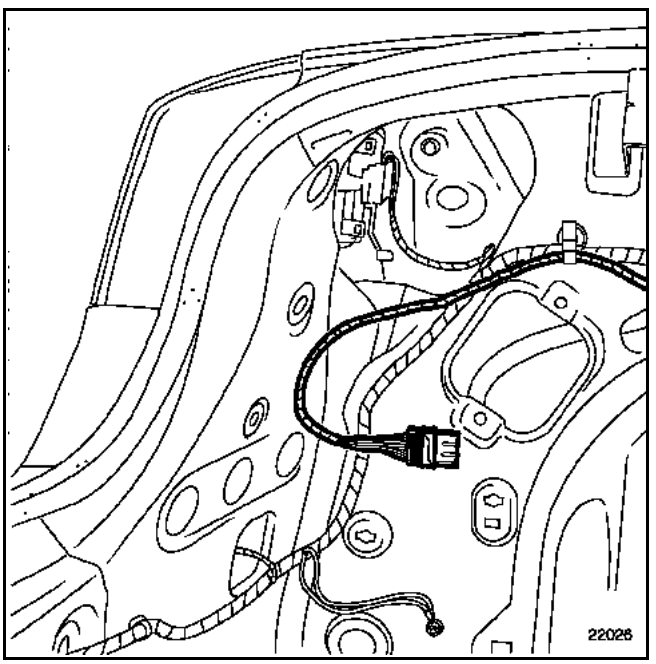

OPERATION

The alarm is connected to the UCH via a serial connection.

The command to deactivate the alarm is given by the UCH via a coded line when the vehicle is unlocked using the radio frequency remote control.

The command to activate the alarm is given by the UCH when:
– the vehicle is locked using the radio frequency remote control.
– upon automatic relocking.

The UCH informs the alarm control unit of the status of the doors after being locked with the radio frequency remote control.

CONNECTION

Track	Description
1	Direction indicators switch
2	Locking indicator light control
3	+ After ignition
4	+ Caravan (not used for the alarm)
5	+ Battery
6	Bonnet switch signal

GETtheMANUALS.org

IMPORTANT:
pyrotechnic systems (air bags and pretensioners) must not be handled near to a heat source or flame - there is a risk of triggering.

IMPORTANT:
Before beginning to remove the dashboard, it is essential to lock the air bag computer with a fault finding tool (for instructions, see section **88C**).

NOTE:
Locking the air bag electronics casing also unlocks the electric steering column lock.

REMOVAL

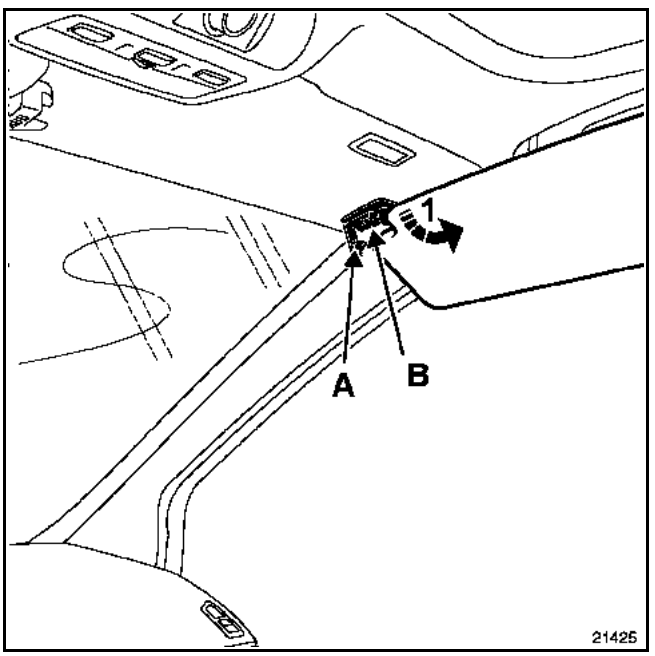

Move the sun visor round to the door.

Unclip:
– mounting cover (A).
– clip (B).

Turn the sun visor back to the windscreen.

Remove sun visor (1).

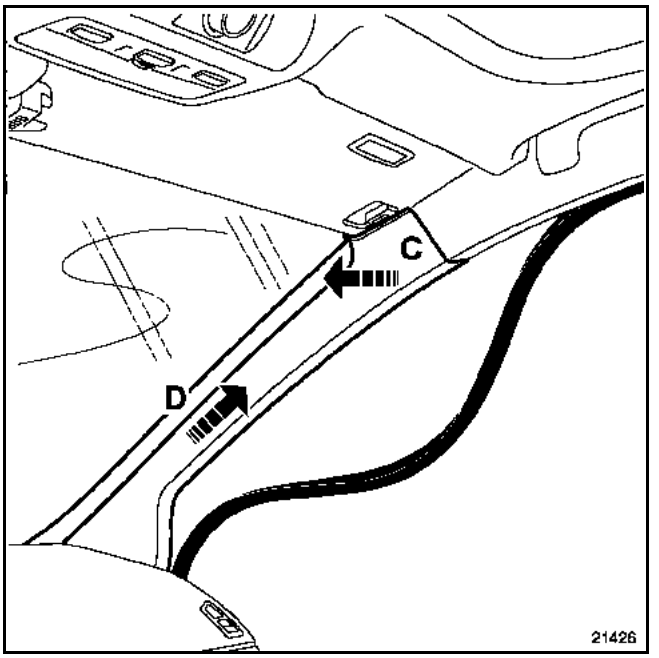

Release:
– the door frame seal partially,
– the upper section of the trim (C),
– trim (D) keeping the upper section detached.

Push the seats forward.

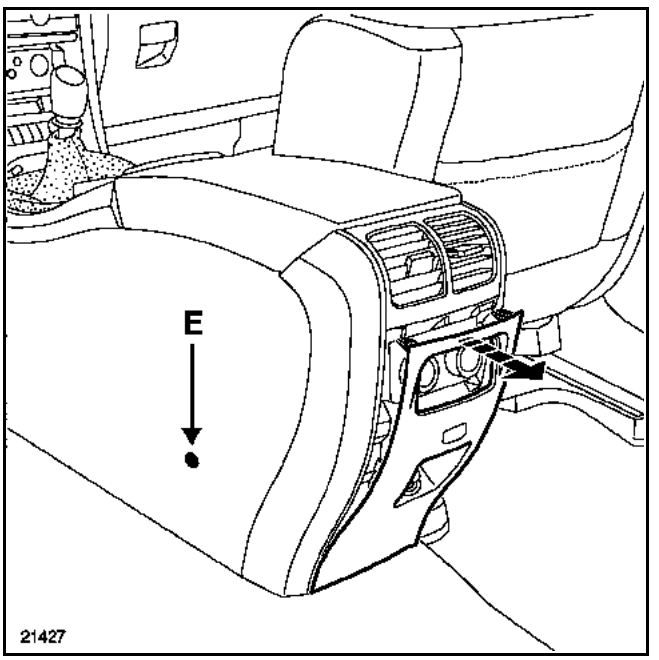

Remove bolts (E).

Push the seats back.

Disconnect the battery.

Unclip:
– the rear face of the console,

GETtheMANUALS.org

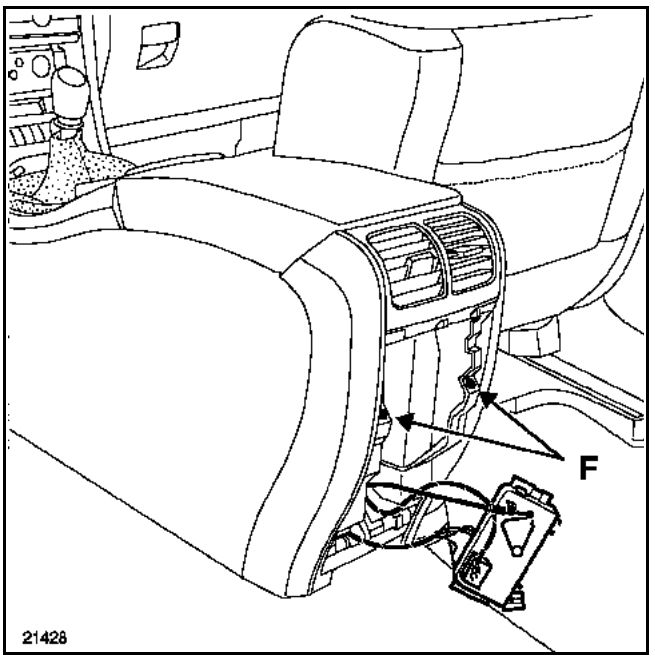

– the heater control, to gain access to the bolts (F)

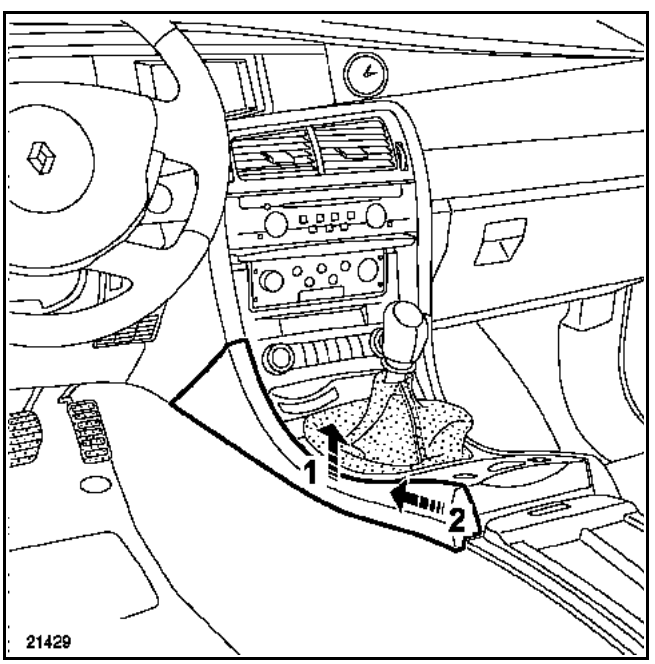

– the rear section of the console side panel by gently pulling at (1) then (2).

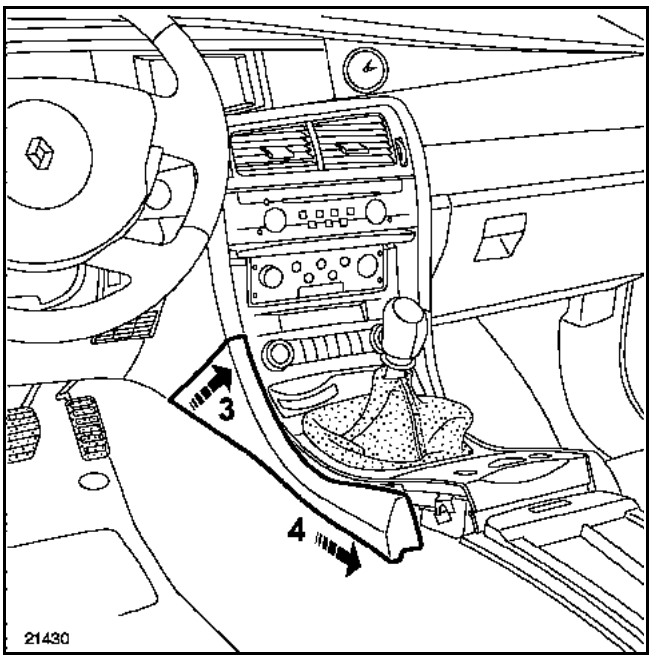

– the front section of the console side panel by gently pulling at (3) then (4),

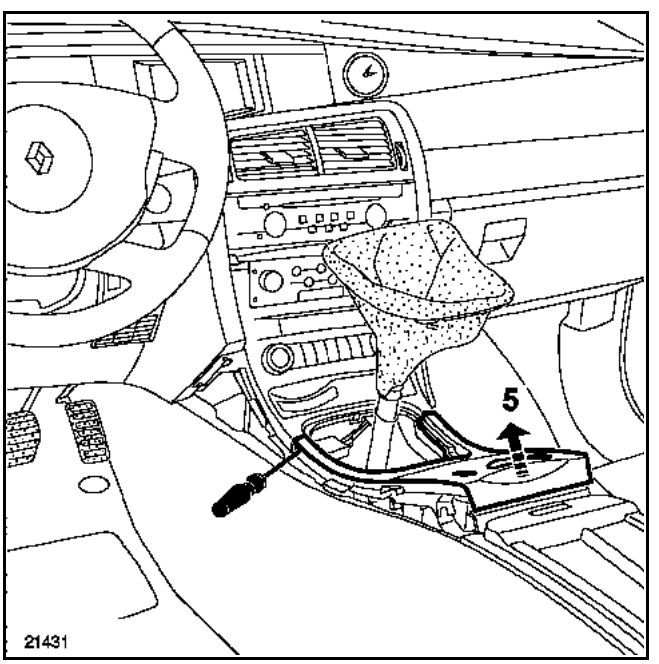

– the speed control gaiter.

Using a flat screwdriver unclip the front then rear section of the central console section (5).

GETtheMANUALS.org

SPECIAL NOTES ON THE AUTOMATIC GEAR LEVER

REMOVAL

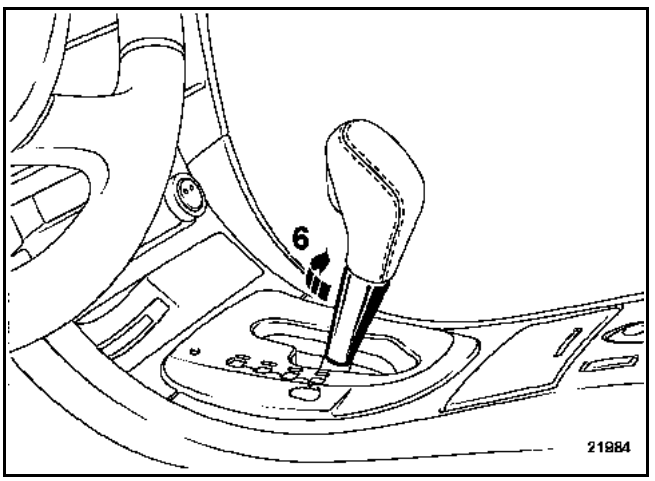

Rotate lower section (6).

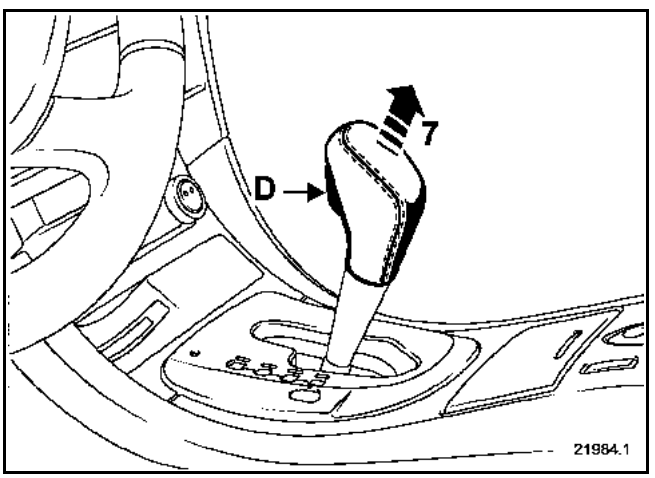

Press control unlocking button (D); pull out lever (7).

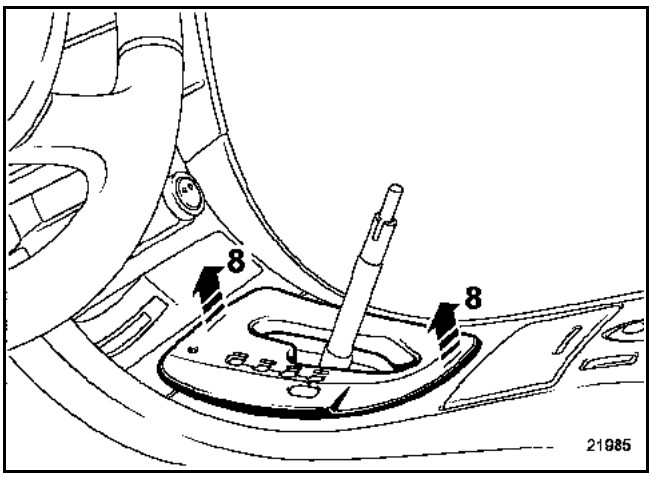

Unclip gear lever plate (8).

REFITTING

Clip on the gear lever plate.

Assemble the two gear lever sections; clip together.

GETtheMANUALS.org

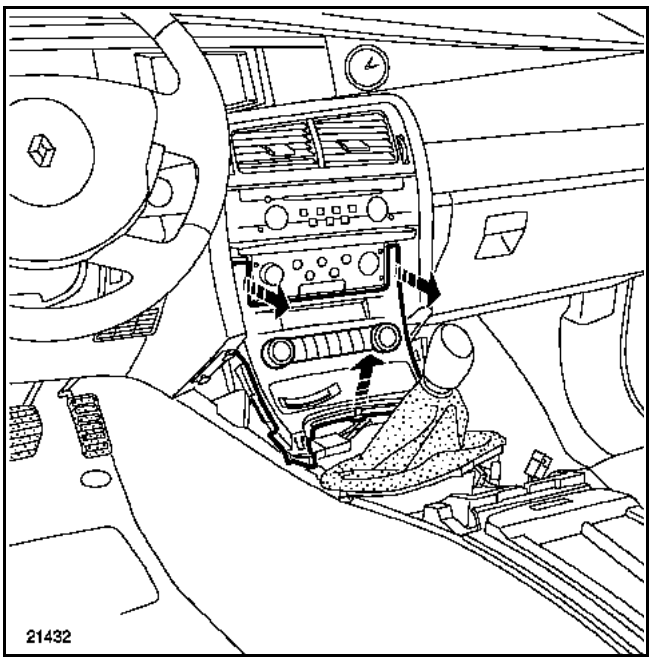

Unclip the Renault card reader at the top and bottom sections.

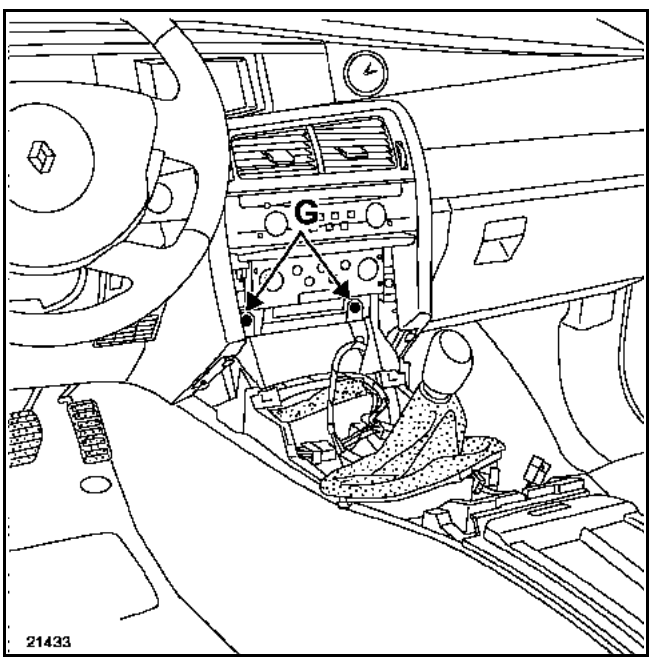

Remove bolts (G).

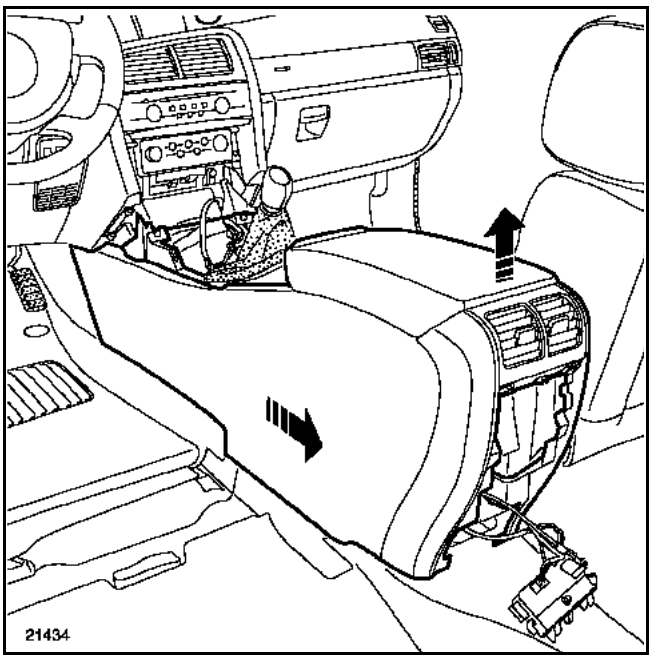

Lift the rear section of the console slightly, then slide it towards the rear of the vehicle.

Remove:
- the radio using the **Ms. 1373** or **Ms. 1639** tools (depending on the version),
- the central communications unit (depending on the version), using the **Ms. 1373** tool

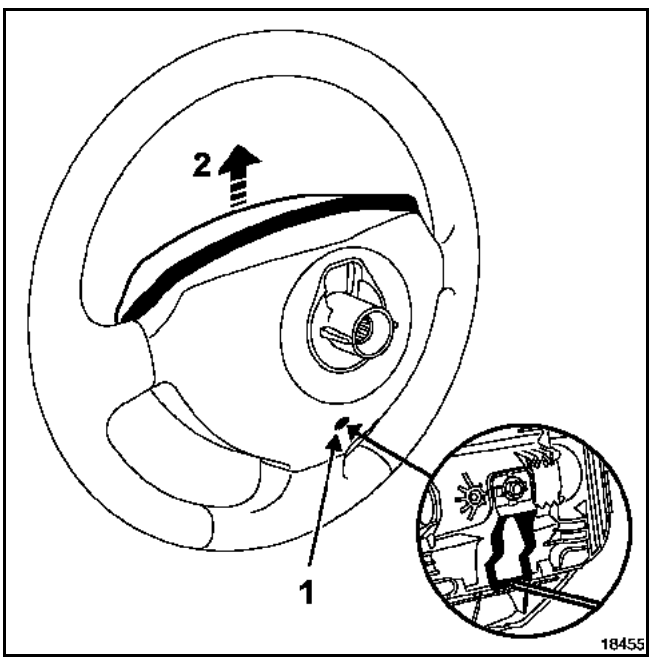

- the steering wheel air bag cushion. To do this, insert a screwdriver into hole (1) then move it upwards (2).

GETtheMANUALS.org

Disconnect the steering wheel air bag connectors and the cruise control button connectors

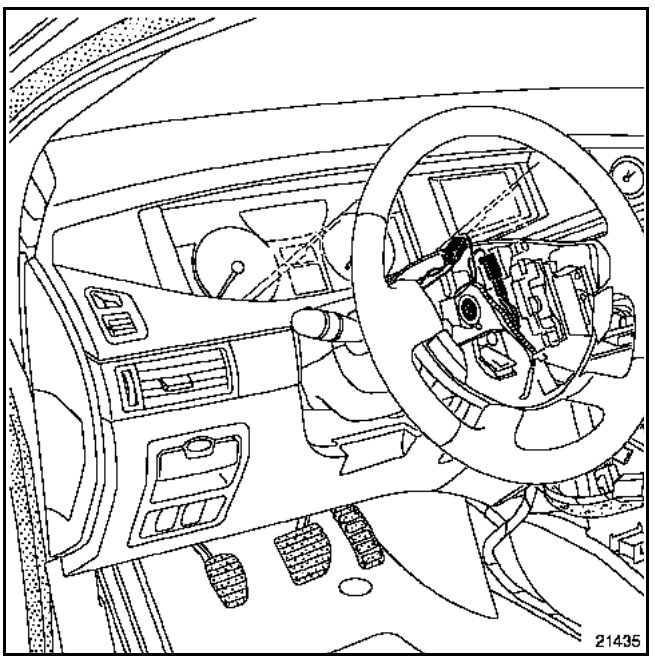

Remove:
– the steering wheel bolt,
– the steering wheel after setting the wheels straight,

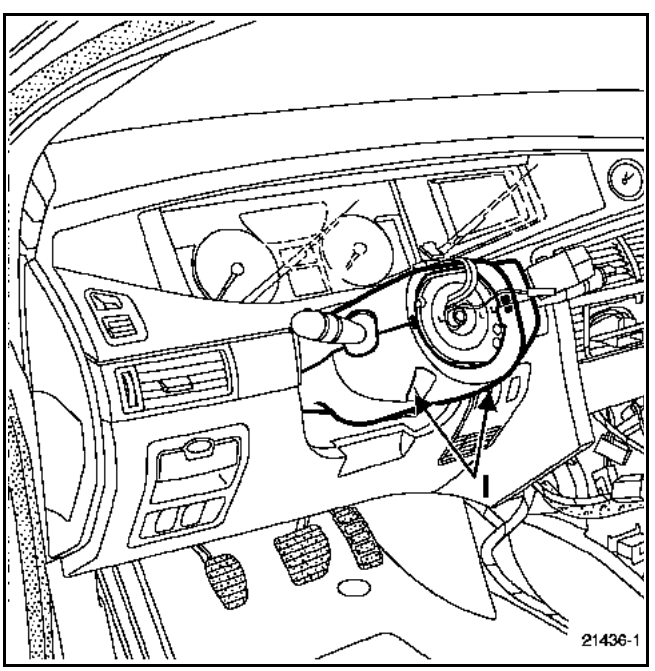

– the bolts (I), then release the upper and lower cowlings,

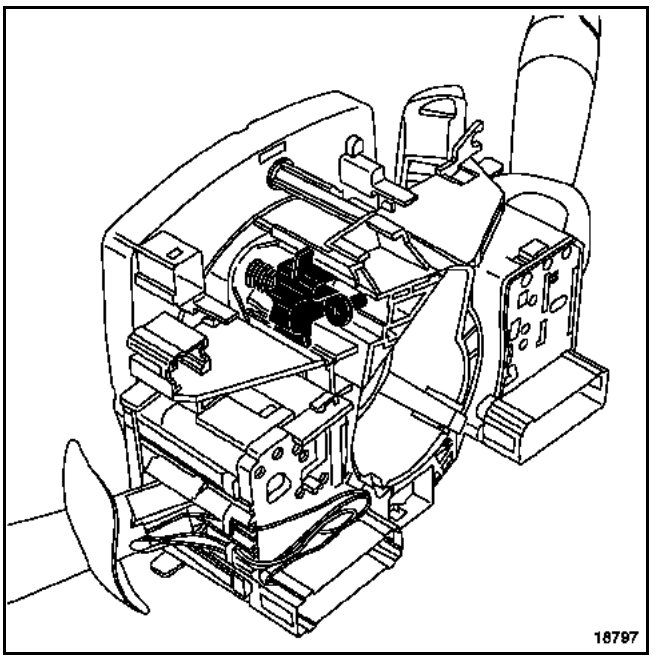

– the rotary switch, marking its position,

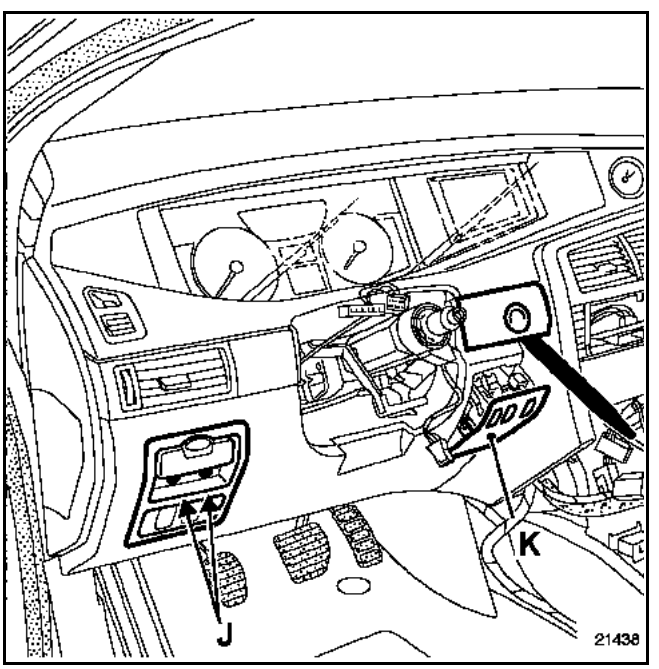

– The starter button mounting,
– the automatic parking brake control bolts (J) after removing the cover,
– switch mounting (K).

GETtheMANUALS.org

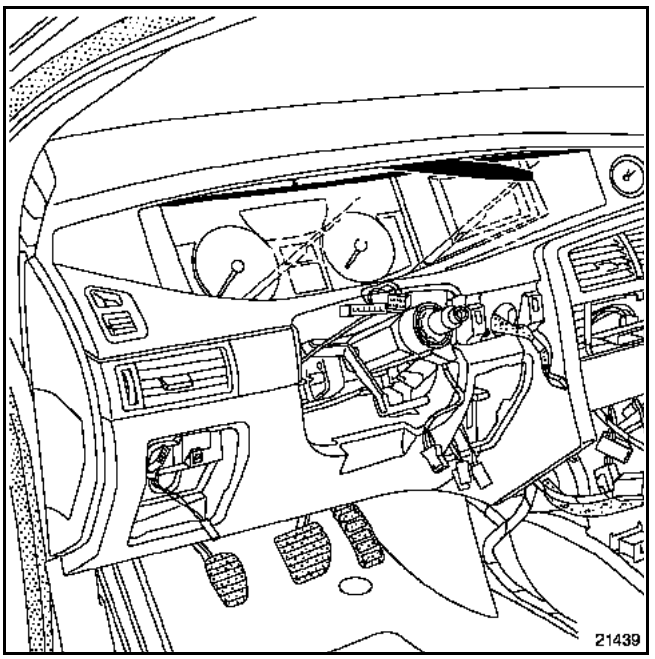

Unclip:
– the instrument panel upper trim,

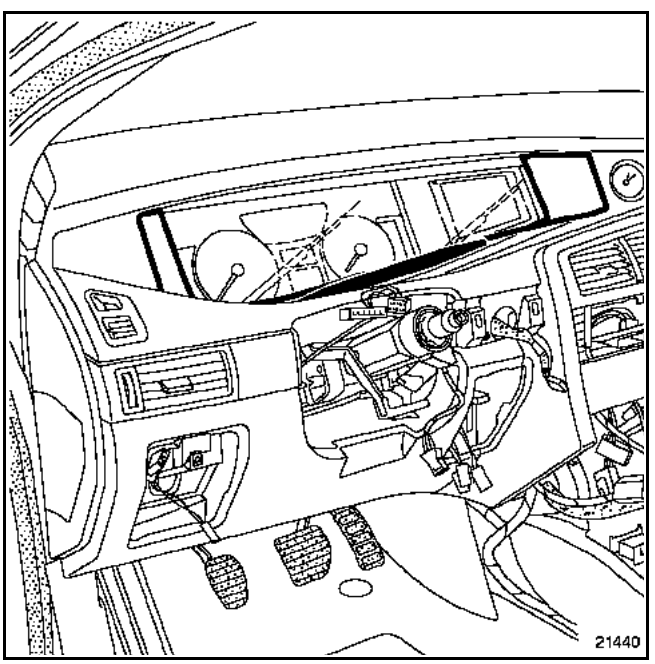

– the instrument panel lower trim strip.

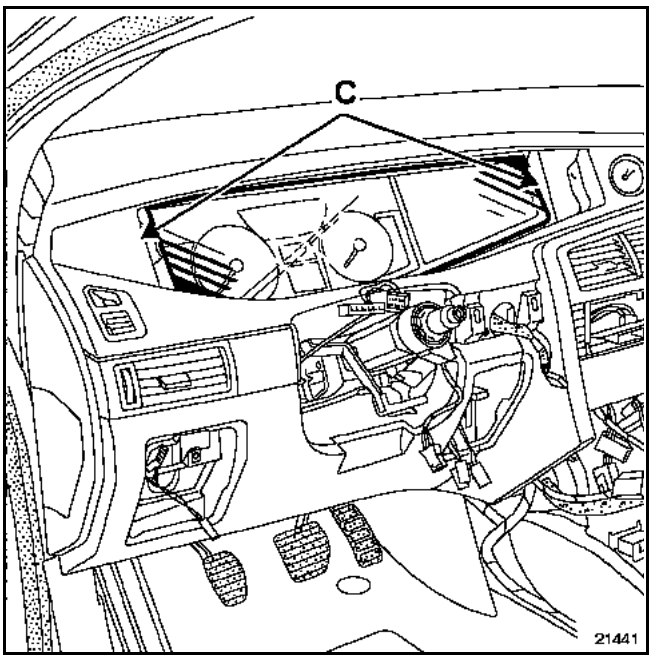

Remove:
– the bolts (C), then release the instrument panel,
– the bolt located behind the instrument panel.

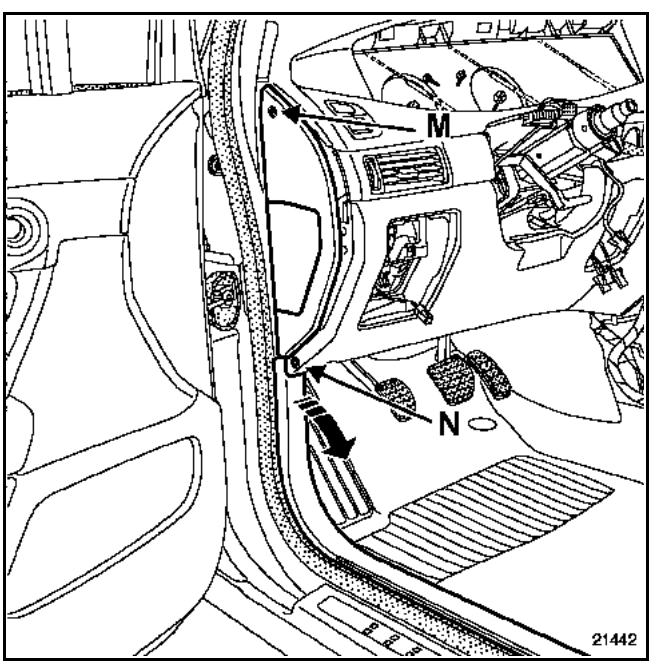

– the sides of the dashboard, to gain access to bolts (M),
– the front door pillar trims (partially) and unscrew bolt (N).

GETtheMANUALS.org

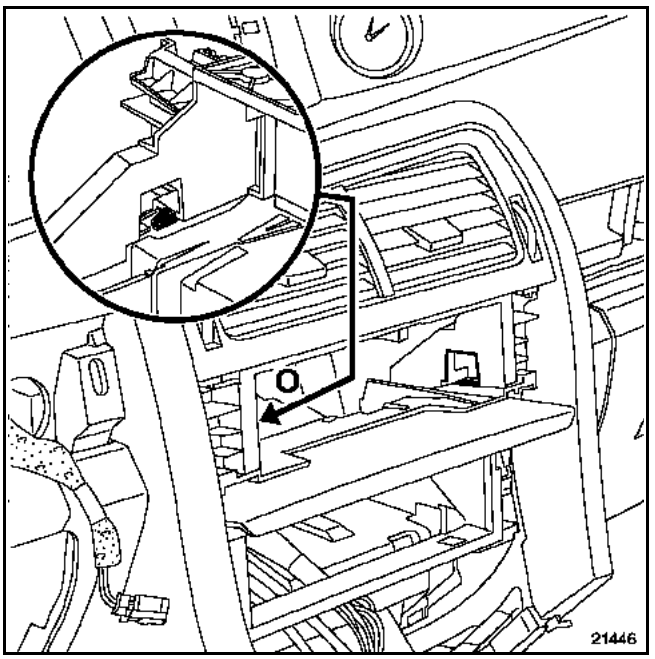

Unclip the two clips (O), then remove the cover from the central communications unit or storage unit.

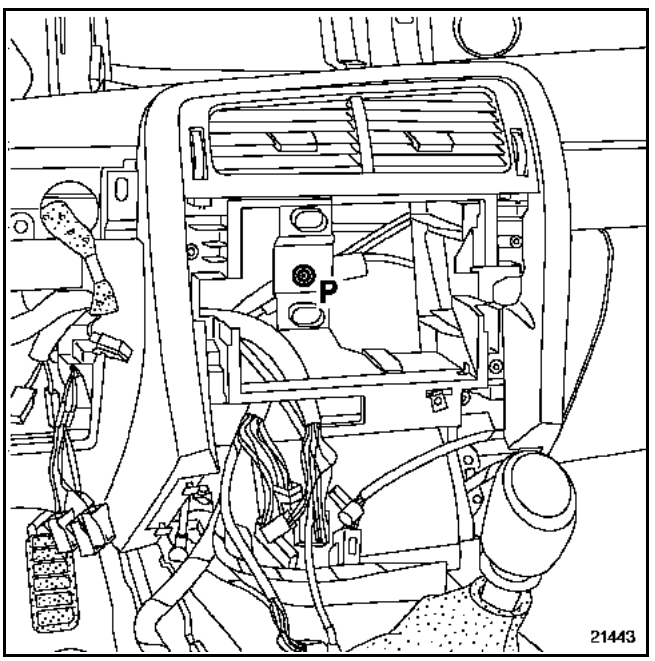

Remove:
– the bolt (P),

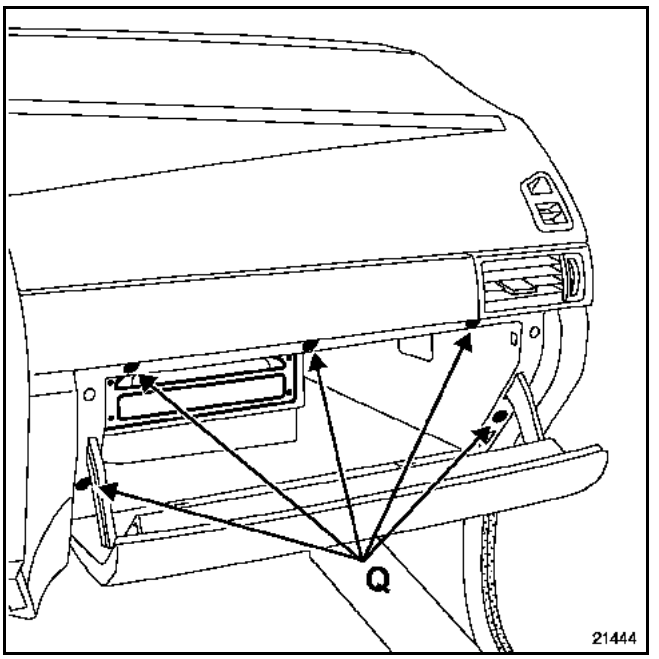

– the CD-ROM drive with tool **Ms. 1373** (according to version),
– the bolts (Q), then remove the glovebox.

IMPORTANT:
the GPS aerial lead is very fragile, do not bend or pinch it.

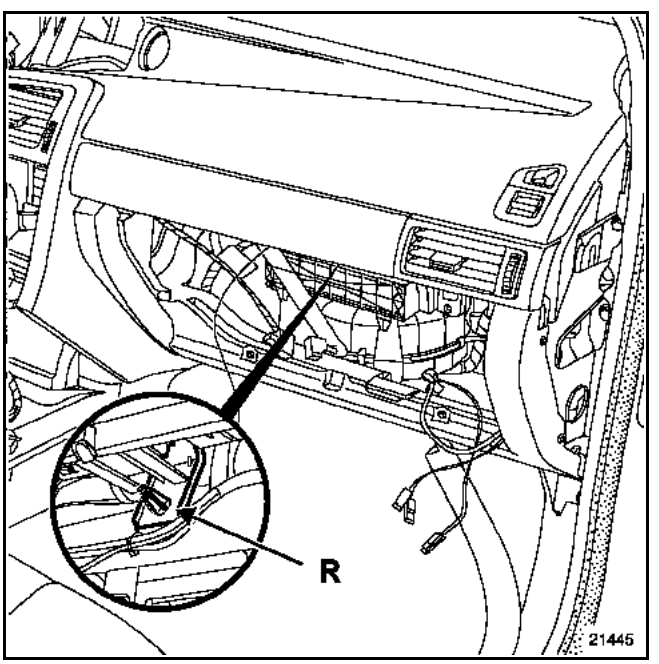

Fit a ring spanner (R) to lock the air bag mounting clip on the beam.

GETtheMANUALS.org

Disconnect:
– the passenger air bag connector attached to the dashboard beam next to the Fuse Box - Option Relay (S),

IMPORTANT:
Do not disconnect the connector located on the passenger air bag module.

– the two tweeters,

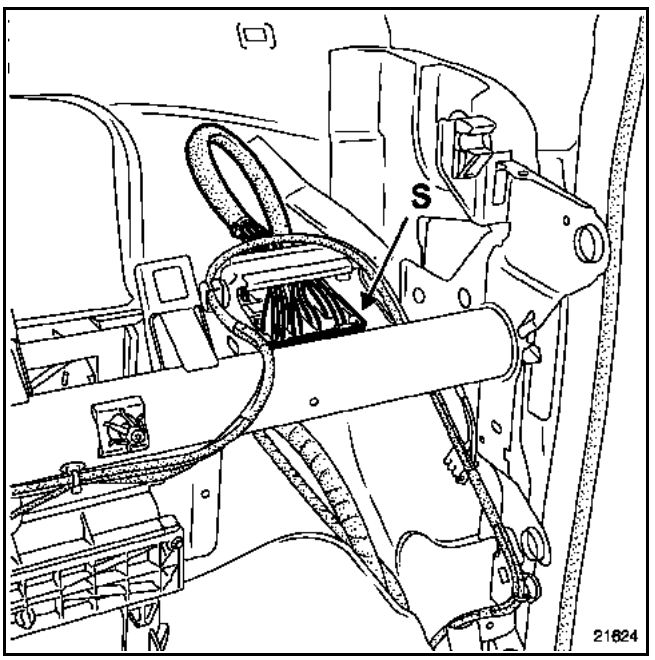

– the dashboard union connector, then remove it (requires two people).

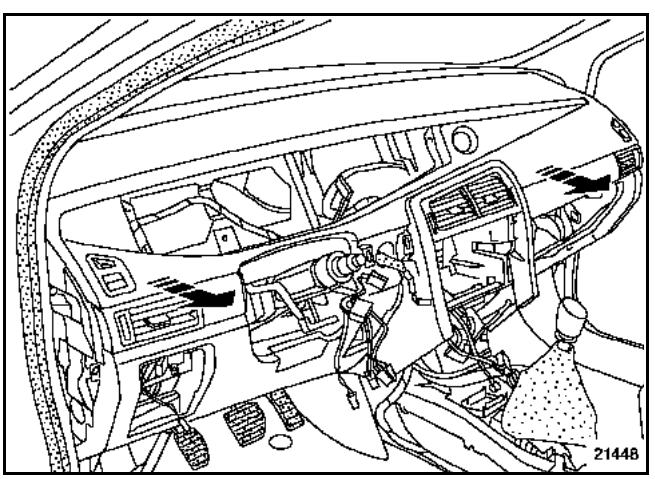

REFITTING

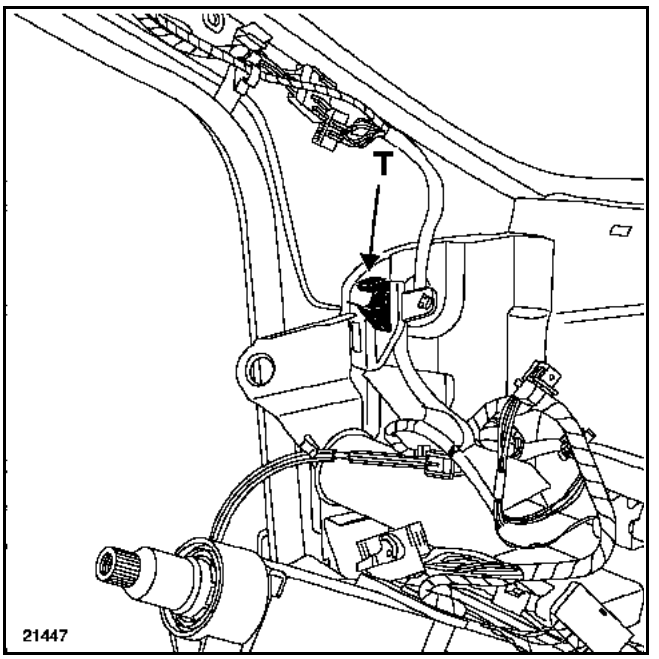

Before refitting the dashboard, check that the clips are in good condition (T).

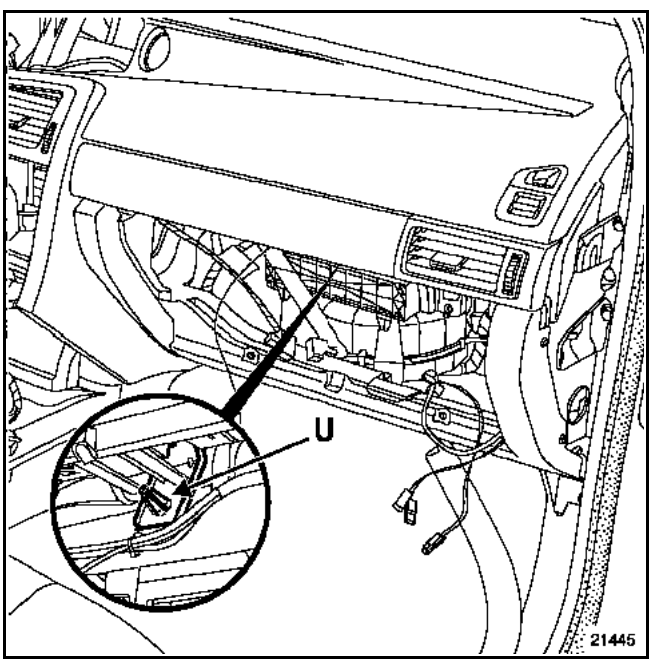

IMPORTANT:
It will be necessary to replace indexing guide (U), whenever it is removed and tighten it to a torque **2 Nm** using tool **Mot. 1608**.

Offer the dashboard up (requires two people).

GETtheMANUALS.org

Make sure that the dashboard is securely attached to the indicator guide.

IMPORTANT:
Before attaching the dashboard, place the harness in the correct position and remember to connect the passenger air bag connector.

SPECIAL FEATURE OF THE ROTARY SWITCH

Before refitting the rotary switch, ensure that the wheels are straight.

SPECIAL FEATURE OF THE STEERING WHEEL

IMPORTANT:
The steering wheel splines have foolproofing devices so that the wheel can be fitted in one position only.

The steering wheel should be inserted freely into the splines.

Be careful not to damage them.

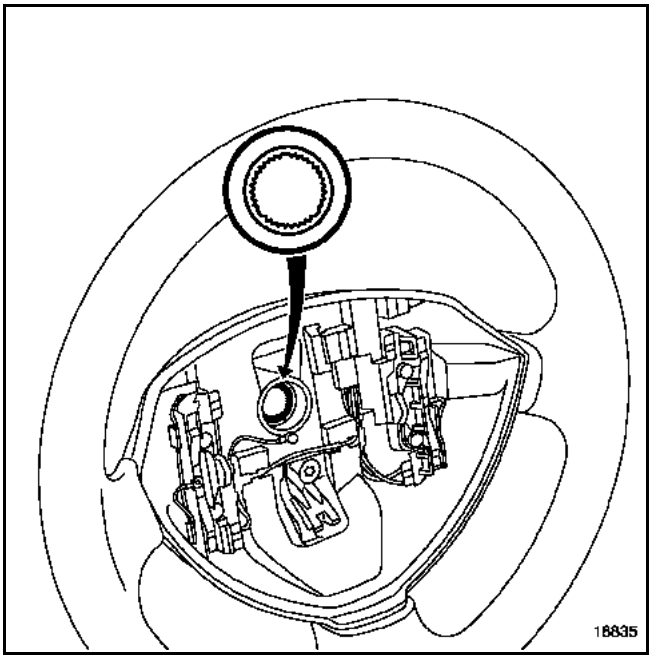

IMPORTANT:
The steering wheel bolt must be replaced and tightened to a torque of 44 Nm each time the steering wheel is removed.

GETtheMANUALS.org

SPECIAL NOTES ON THE AIR BAG

IMPORTANT:
Before unlocking the air bag computer, test it using the fault finding tool.
If everything is correct, unlock the computer. If not, refer to the fault finding section.

IMPORTANT:
If these instructions are not followed the system may not operate normally and could even be triggered incorrectly.

When replacing a dashboard fitted with a passenger air bag, it is essential to replace the sticker (on the side of the dashboard), see section 88C

NOTE:
After reconnecting the battery, it may be necessary to perform some basic programming which does not require a fault finding tool:
– setting the time on the clock,
– entering the four figure radio code,
– initializing the one touch window lift motors,
– initializing the sunroof.

GETtheMANUALS.org

NOTE:
Only the glass may be replaced on these instrument panels. If other components fail, the whole instrument panel must be replaced.

REMOVAL

Disconnect the battery.

Using a stiff spatula, remove:
– the upper instrument panel trim clipped onto the dashboard,

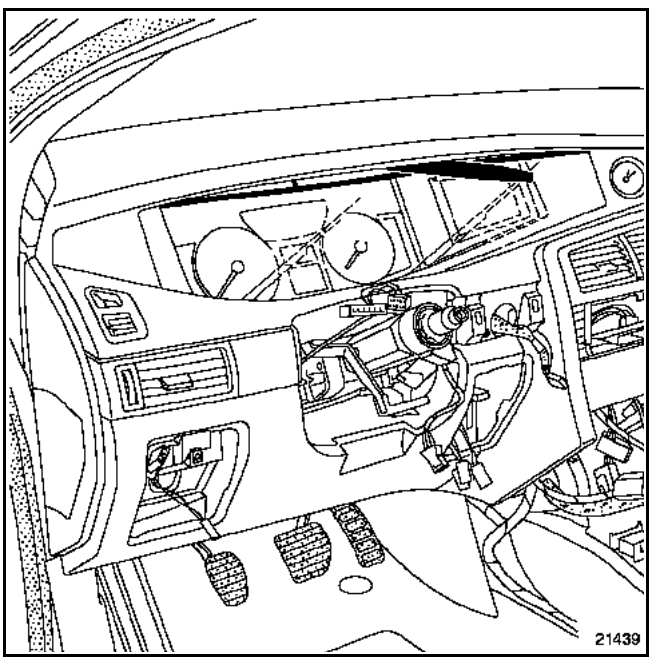

– the lower instrument panel trim strip clipped onto the dashboard.

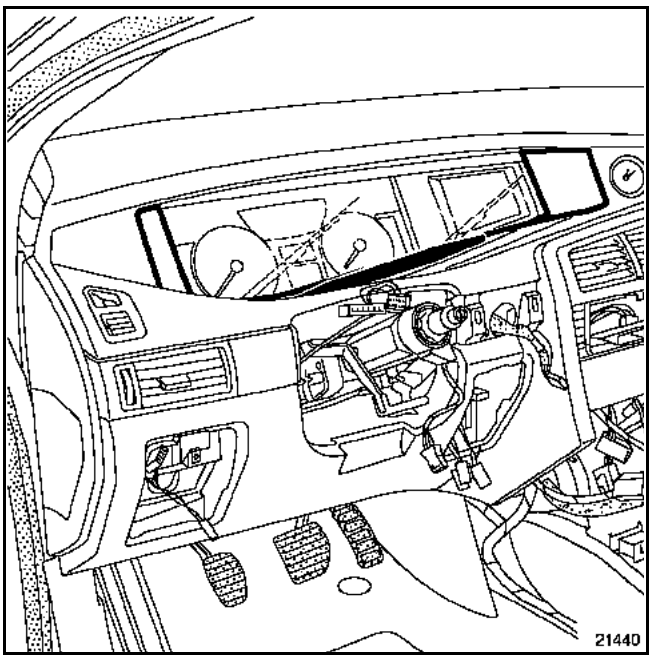

Remove the bolts (A), then release the instrument panel,

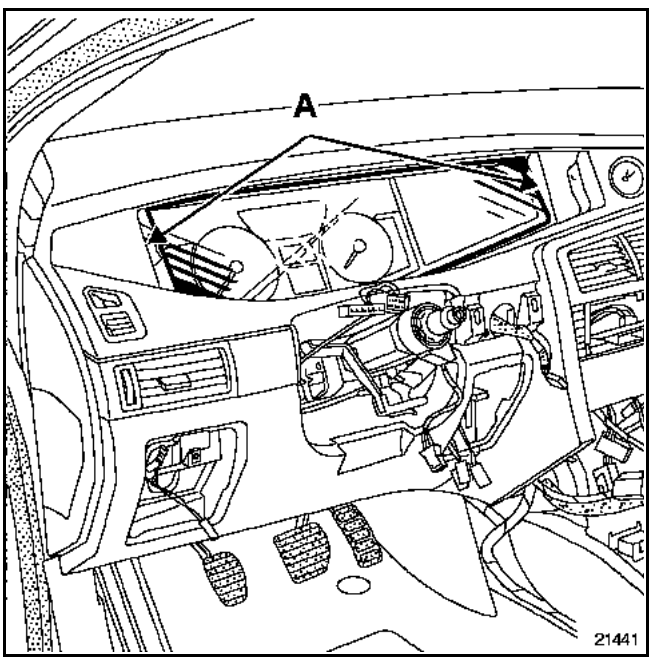

REFITTING

IMPORTANT:
When replacing the instrument panel, make the necessary configurations.

If the vehicle is fitted with a voice synthesiser, refer to section **83B**.

GETtheMANUALS.org

CONNECTION (fullest version)

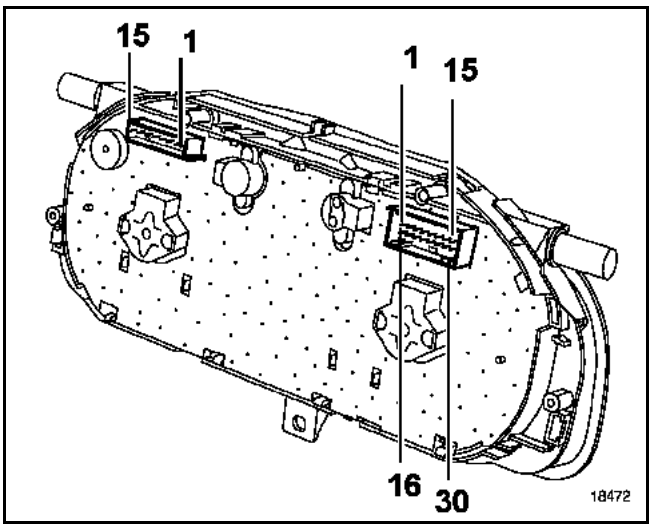

Red connector

1 Opening element signals
2 Discreet key
3 Not used
4 Not used
5 Lighting dimmer
6 ADAC scroll button
7 Not used
8 Voice synthesiser multiplexing (H):
9 Not used
10 Multiplexing (H)
11 Multiplexing (L)
13 Diagnostic line
13 Voice synthesiser multiplexing (L)
14 Not used
15 Not used

Grey connector

1 Door open switch indicator
2 Right direction indicator light
3 Left direction indicator light
4 + before ignition
5 Immobiliser warning light
6 Seat belt warning light
7 Not used
8 Dipped headlight indicator light
9 Main beam indicator light
10 Not used
11 Rear fog light indicator light
12 Fog light indicator
13 Low screen wash warning light
14 Battery charge warning light
15 Heated seat warning light
16 + after ignition feed
17 Not used
18 Oil pressure warning light
19 Bonnet signal
20 Not used
21 Oil level sensor
22 Fuel sender signal
23 Not used
24 Earth
25 Fuel gauge earth
26 Oil level sensor earth
27 Side lights indicator light
28 Repeat button
29 Hand brake warning light
30 Brake fault warning light

GETtheMANUALS.org

GENERAL INFORMATION

The instrument panel contains the following functions:

- needle gauge functions:
  - vehicle speed
  - rev counter
  - Coolant temperature,
  - fuel level

- audible function:
  - indicators
  - lights on reminder when the door is opened (except vehicles fitted with a voice synthesiser),
  - Renault Card in reader reminder,
  - seat belt reminder on the driver's side,
  - automatic locking when driving confirmation,
  - child safety fault warning,
  - overspeed (Arabia, depending on version)
  - automatic headlight switch-on warning
  - cruise control/speed limiter or adaptive cruise control warning (depending on the version),
  - automatic parking brake on or off.

NOTE:
The **warning reminder for the seat belt on the driver's side** function warns that the seat belt on the driver's side has not been buckled once the vehicle exceeds approx. **6 mph (10 km/h)**:
- by a **signal** (the buzzer is in the instrument panel) which lasts about **90 seconds**,
- by **flashing of the seat belt reminder warning light**, (returns to being lit continuously once buzzer goes off).

- warning and indicator light function

- display function:
  - oil level reading
  - odometer
  - "**Trip Computer**" on-board computer.

- symbol functions:
  - insertion of the RENAULT Card,
  - press on the start/stop button,
  - **SERVICE** or **STOP** symbols,
  - operating indicators
  - tyre inflation pressure (refer to Section **35B**)
  - gearbox engaged (depending on version)
  - cruise control/speed limiter or adaptive cruise control symbols (depending on the version),

- cruise control or speed limiter speed (refer to the **cruise control/speed limiter** section).

- voice synthesiser (depending on the version) (for more about the electronics casing, refer to the "**voice synthesiser**" section).

NOTE:
A page of the Trip Computer function can override the symbol warnings (depending on the version).

When the distance is less than **1500 km** or **1000 miles** or when **22 months** have elapsed (depending on the engine type and country), the key flashes for **30 seconds** on switching on the ignition or when the "**oil service interval**" page is displayed on the Trip Computer.

The key flashes continuously if the range reaches **0** or after **24 months** (depending on the engine type and country).

To reset the oil service interval:
- switch on the ignition,
- select the **oil service interval** page,
- press the "**RESET**" button for **5 seconds**,
- the range flashes for **4 seconds** then remains permanently lit,
- release the **RESET** button when the relevant value appears.

NOTE:
The oil service interval is stored in the injection computer. It is impossible to alter it.

GETtheMANUALS.org

FUNCTIONS SHOWN BY SYMBOLS

The large display is used to view certain functions. These functions are represented by symbols:

- **Insertion of the RENAULT Card**
- **Monitored functions test phase**
  - coolant temperature state
  - fuel level low warning
  - injection fault
  - automatic transmission fault
  - low screen wash level
- **monitored functions ok**
- **press on start/stop button**
- **Stop** warning light
- **Service** warning light
- red **Battery charge** warning light flashes alternately with the **Stop** warning light
- red **Oil pressure** warning light flashes alternately with the **Stop** warning light
- red **Coolant temperature** warning light flashes alternately with the **Stop** warning light
- amber **preheating** warning light
- amber **Fuel level low** warning light
- amber **injection fault** warning light
- amber **Automatic transmission fault** warning light
- amber **low screen wash level** warning light
- display of the automatic transmission lever position
- tyre inflation pressures (refer to Section **35B**)
- notes for **Cruise control or Speed limiter** (refer to Section **83D**)
- notes for **Adaptive Cruise Control / Speed Limiter** (refer to Section **83D**)

NOTE:
Depending on the version, this display may be deactivated by the scroll button on the Trip Computer menu (unless it displays certain fault symbols).

CONFIGURATIONS

Correct configurations must be set depending on the vehicle's equipment level:

- vehicle type:
  - Laguna (CF 072)
  - Vel Satis (CF 071)

- voice synthesiser language:
  - French (CF 066)
  - English (CF 073)
  - Italian (CF 075)
  - German (CF 074)
  - Spanish (CF 076)
  - Dutch (CF 077)
  - Portuguese (CF 078)
  - Turkish (CF 079)

- gearbox type:
  - manual gearbox (CF 132)
  - automatic transmission (except for the P9X engine)
  - automatic transmission (P9X/V4Y engine)

- tyre inflation pressure units:
  - pressure in bar (CF 069)
  - pressure in psi (CF 070)

- cruise control type:
  - without proximity control (CF 068)
  - with proximity control (CF 067) (see Section **83D**).

NOTE:
For the voice synthesiser to work correctly, the electronics casing located under the dashboard must be correctly connected every time the battery is disconnected.

IMPORTANT:
For the new configurations are taken into account, the battery must be reconnected.

GETtheMANUALS.org

OPERATION OF THE DISPLAY

❶ Oil level warning

This function is displayed for approximately **30 seconds** when the ignition is switched on or after the engine is started.

If the level is between the permitted maximum and minimum, the display shows "**oil ok**".

13141a

If, during this time the **Trip Computer** or **RESET** buttons are pressed, the display shows **oil ok** and then the oil level is shown by squares. These disappear as the oil level drops and are replaced by dashes.

13141b

If the oil level is at a minimum when the ignition is switched on, the dashes and the word **oil** flash for 30 seconds. The **service** warning light comes on and remains lit after the engine is started.

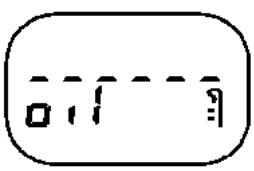

13141c

NOTE:
- under normal operating conditions, the oil level is only measured if the ignition has been switched off for more than one minute; otherwise the old oil level value is redisplayed.
- however, when a fault in the gauge is detected, the display switches directly to the mileometer function when the ignition is switched on.
- It is normal to find that the oil level is not always the same: Various parameters may be involved:
  – parking on a slope,
  – too short a wait after running the engine for a short time (especially when the oil is cold), etc.

❷ Mileometer

Mileometer

The odometer will be displayed for approximately **30 seconds** when the ignition is switched on (after the oil level signal). Pressing the **Trip Computer** or **RESET** button reduces this display time.

Trip meter

The trip meter is displayed instead in the place of the mileometer if the **Trip Computer** button is pressed briefly.

It is reset by pressing the **RESET** button. Resetting the trip meter is different from resetting the Trip Computer.

NOTE:
It is not possible to select the display in kilometres or miles. The instrument panel must be replaced.

GETtheMANUALS.org

❸ On-board computer ("Trip Computer")

The various sequences of the on-board computer may be displayed instead of the mileage recorders by successively pressing the button on the end of the wiper stalk ("**Trip Computer**" key).
It is reset (reset button) by pressing the **ZEROING** key.

The signals from the on-board computer is displayed after the trip meter as follows:

– **Fuel consumed** (in litres or gallons*) since the last time the reset button was pressed.

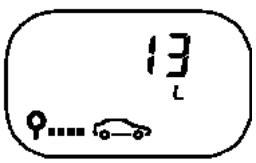

13141d

– **Average consumption** (in **l per 100 km** or mpg *) since the last reset.

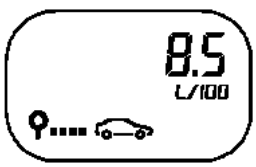

13141st

This is only displayed after the vehicle has travelled approximately **400 m**. Below this, fixed dashes appear on the display.

This takes into consideration the distance travelled and the fuel consumption since the last reset.

* UK version.

– **Instantaneous consumption** (in **l per 100 km**)

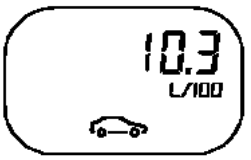

13141f

This is only displayed when the vehicle speed exceeds **18 mph (30 kph)**. Below this, fixed dashes appear on the display.

If the accelerator pedal is in the no load position and the speed exceeds **20 mph (30 km/h)**, the instantaneous consumption is 0.

NOTE:
This function is not available on the UK version.

– **Estimated range with remaining fuel** (in km or miles*).

13141g:

This is displayed after the vehicle has travelled approximately **400 m**. Below this, fixed dashes appear on the display.

This is the potential distance remaining calculated by taking into account the distance travelled, the amount of remaining fuel in the tank and the fuel consumed.

NOTE:
The range remaining is not displayed when the fuel level warning light is lit.

GETtheMANUALS.org

– **Distance travelled** since the last reset (resetting the "**Trip Computer**").

13141h

– **Average speed** since the last reset.

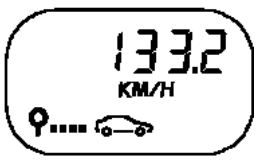

13141j

This is displayed after the vehicle has travelled approximately **400 m**. Below this, fixed dashes appear on the display.

This is obtained by dividing the distance travelled by the time elapsed since the last reset.

The on-board computer internal time base.

– **Oil service interval** informs the driver of the distance (in km or in miles*) which can be travelled before the next oil change.

When the distance is less than **1,500 km** or **1000 miles** or when **22 months** have elapsed, the key flashes for **30 seconds** when the ignition is switched on or when the **oil service interval** page is displayed on the Trip Computer. The key flashes continuously if the range reaches **0** or after **24 months** (depending on the engine type and country).

To reset the oil service interval:
– switch on the ignition,
– select the "**oil service interval**" page on the Trip Computer,
– press the **RESET** button for approximately **5 seconds**,
– the range flashes for **4 seconds** then remains permanently lit,
– release the **RESET** button when the relevant value appears.

GETtheMANUALS.org

FAULT FINDING PROCEDURE

To access the fault finding procedure, press and hold the "**Trip Computer**" button on the end of the wiper stalk, with the ignition on but the engine off.

– The needles move in ranges of **1000 rpm**, **25 mph (40 km/h)**, **25°** and each quarter of the tank.

– The **liquid crystal display** test appears.

13141l

All the segments on the display should be lit up.

To go to the next test, press the "**Trip Computer**" button.

– The **amount of fuel** remaining in the tank test appears.

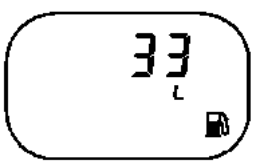

13141m

The value displayed should correspond to the amount of fuel remaining in the tank in litres (even for the UK version).

To go to the next test, press the "**Trip Computer**" button.

– The **fuel flow** in litres / hour test appears (engine running).

13141N

A value should be displayed when the engine is running.

To go to the next test, press the "**Trip Computer**" button.

– **Viewing stored faults.**

13141o

If the letter **t** is displayed, this means that an **injection** signal fault has been stored for at least **4 seconds**.

If the letter **J** is displayed, this means that a fault has been detected on the fuel sender (disconnected for more than **100 seconds**). The resistance should be between **5 and 350 Ω**.

If the letter **d** is displayed, this means that an injection signal fault has been detected.

If the letter **h** is displayed, this means that an oil level sensor fault has been detected. The resistance should be between **6 and 20 Ω**.

If only fixed dashes are displayed, this means that no faults have been detected.

Press the **RESET** button to exit the fault finding procedure and erase any stored faults.

IMPORTANT:

– The on-board computer shows a fault by displaying flashing dashes.
– If no signal is received from the injection computer via the multiplex network, the fuel gauge, instantaneous consumption and fuel range functions do not work.
– If no signal is received from the ABS computer via the multiplex network, the mileometer and oil service interval functions will not work.
– Each time the "Trip Computer" button is pressed a display symbol appears (START (white), BATTERY CHARGE FAULT (red) and FUEL LEVEL LOW (amber)).

To exit the fault finding procedure, press the **RESET** button.

GETtheMANUALS.org

The rear seat base must be removed to remove the gauge (petrol or diesel). See Section **19C** for the procedure.

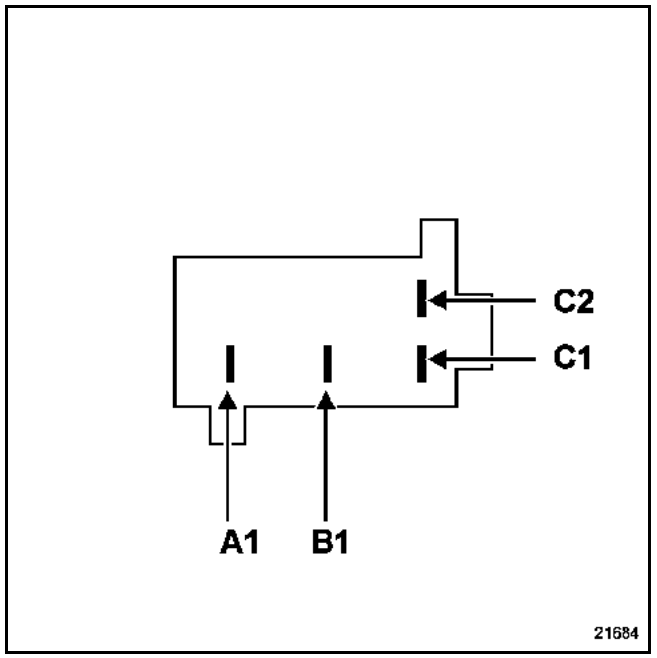

Track	Description
A1	Fuel level signal
A2	Not used
B1	- Fuel sender
B2	Not used
C1	+ Fuel pump
C2	- Fuel pump

Checking

Ensure that the resistance varies when the float is moved.

Level	Resistance (± 10 Ω)	Useful volume (± 5 l)
Full tank	20 Ω	80
$^3/_4$ tank	87.5 Ω	62
$^1/_2$ tank	155 Ω	44
$^1/_4$ tank	222.5 Ω	26
Tank empty	290 Ω	7

NOTE:
All the above values are given merely as an indication.

For a more precise measurement, the instrument panel uses a different resistance/position ratio for the needle:

Instrument panel input resistance in Ω	Needle position
20	Full tank
57.5	7/8
95	3/4
132.5	5/8
170	1/2
207.5	3/8
245	1/4
282.5	Enter reserve

GETtheMANUALS.org

OPERATION

The sensor consists of a wire with a high coefficient of resistance. The live wire does not display the same thermal conductivity when it is immersed in a liquid or the air.

After a fixed time a voltage difference is obtained at the sensor terminals depending on the depth of immersion of the wire. This voltage difference is processed by the instrument panel computer which manages the level display function and the "low oil level" warning on the central display.

When the ignition is switched on, the central display shows the message "**oil ok**" for approximately **30 seconds** before switching to the mileometer function.

NOTE:
If a short circuit or an open circuit is detected when the oil level is measured, the display will immediately show the mileometer function.

If the battery voltage is less than **8 V**, the level will not be displayed.

CHECKING

The sensor resistance must be between **6** and **20 Ω**.

The sensor is deemed to be in short circuit for a value lower than **3 Ω**.

The sensor is deemed to be in open circuit for a value higher than approximately **20 Ω**.

LOCATION

Example: G9T engine.

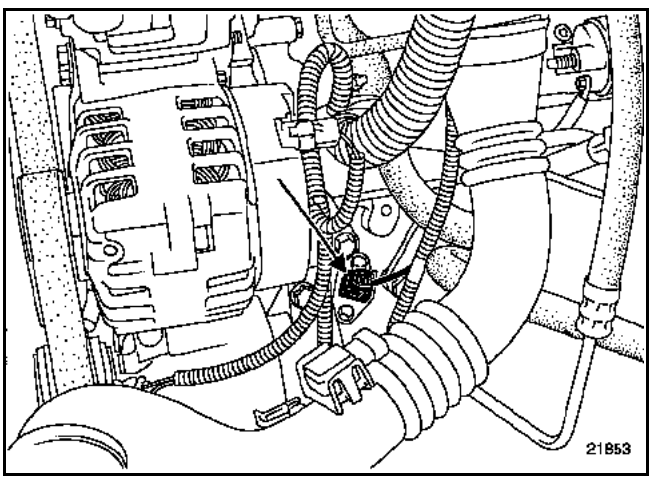

GETtheMANUALS.org

GENERAL INFORMATION

Depending on vehicle equipment, three types of display can be fitted:

- a display specific to the **entry level** radio with the following functions:
  - opening elements closure warning light,
  - radio display,
  - seat belt reminder warning light.
- a display specific to the **top of the range** radio.
- a Carminat navigation screen with the following functions (see Section **83C**):
  - navigation,
  - opening elements closure warning light,
  - radio display,
  - seat belt reminder warning light.

NOTE:
The **top of the range** radio display uses a special multiplex link. See **Section 86A**.

The instrument panel must be removed to remove the display. Refer to the "**Instrument panel**" section.

Basic CONNECTION

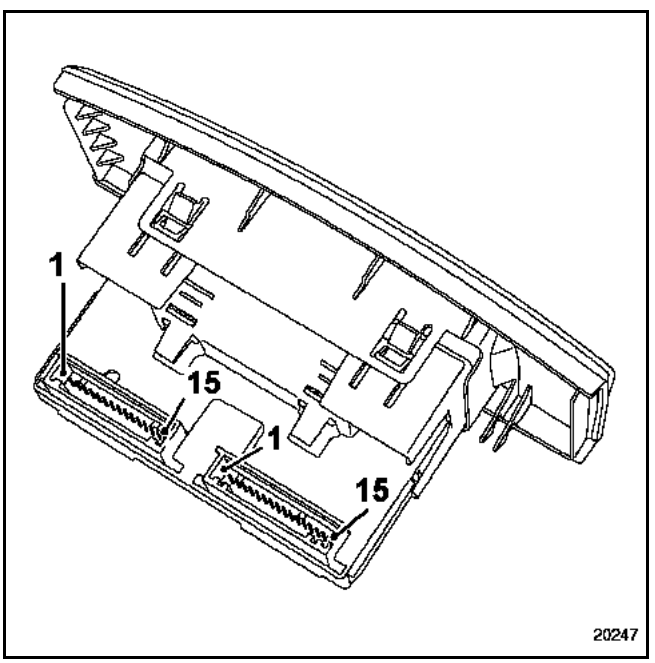

Red 15-track connector

Track	Description
1	Not used
2	Not used
3	Not used
4	Not used
5	Not used
6	Not used
7	Not used
8	Not used
9	Radio control connection (**track B1**)
10	Radio control connection (**track A3**)
11	Radio control connection (**track B2**)
12	Radio control connection (**track B3**)
13	Radio control connection (**track A2**)
14	Radio control connection (**track A1**)
15	Not used

Grey 15-track connector

Track	Description
1	External temperature
2	External temperature
3	Not used
4	Not used
5	Earth
6	Lighting
7	Lighting supply (dimmer)
8	+ accessories feed
9	+ battery
10	External temperature output
11	Earth (radio **track 6**)
12	Radio on signal (radio **track 5**)
13	Radio connection (**Track 1**)
14	Radio connection **(track 2)**
15	Radio connection (**track 3**)

GETtheMANUALS.org

GENERAL INFORMATION

The voice synthesiser function is provided by three components:
– the instrument panel which processes the message conditions and selects the language,
– the voice synthesiser unit which process the signal from the instrument panel and issues the message,
– the voice synthesiser speaker.

The instrument panel and the voice synthesiser unit are connected via the vehicle's multiplex network.

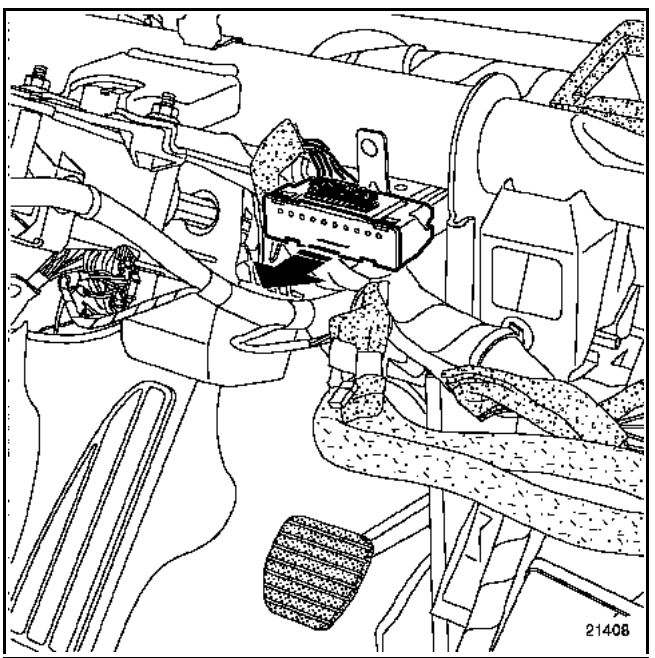

The radio **mute** function is implemented via a wire from the voice synthesiser unit. A signal from the voice synthesiser can be interrupted by a message from the navigation system, telephone, etc. which has priority.

If the vehicle has the navigation function, messages pass through the central communications unit. If the central communications unit is disconnected, no messages are sent. See Section **83C**.

The message volume is increased in stages, depending on engine speed of rotation.

NOTE:
When the discreet key is pressed, messages are replaced by an audible signal.

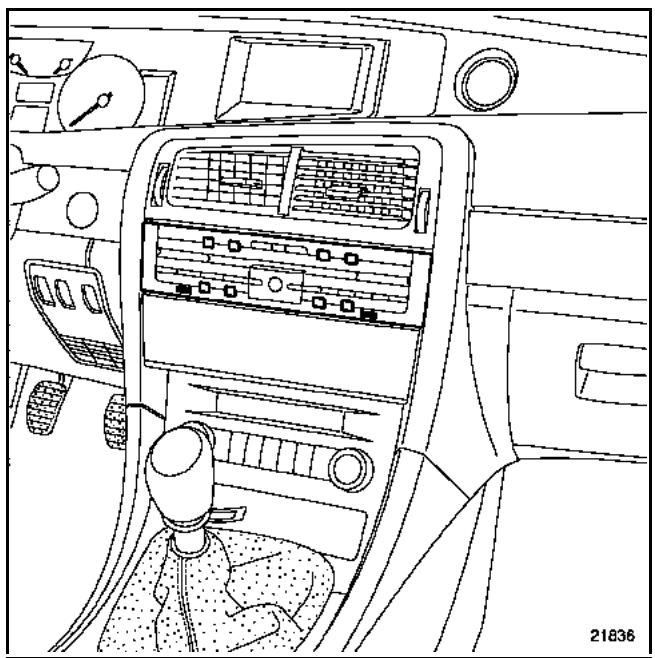

Configuration

One of the eight available languages must be selected:
- French (CF 066)
- English (CF 073)
- Italian (CF 075)
- German (CF 074)
- Spanish (CF 076)
- Dutch (CF 077)
- Portuguese (CF 078)
- Turkish (CF 079)

NOTE:
If the voice synthesiser unit is not connected to the battery connection, the instrument panel does not recognise the function and is configured without voice synthesiser.

GETtheMANUALS.org

ALLOCATION OF TRACKS

Voice synthesiser unit connection.

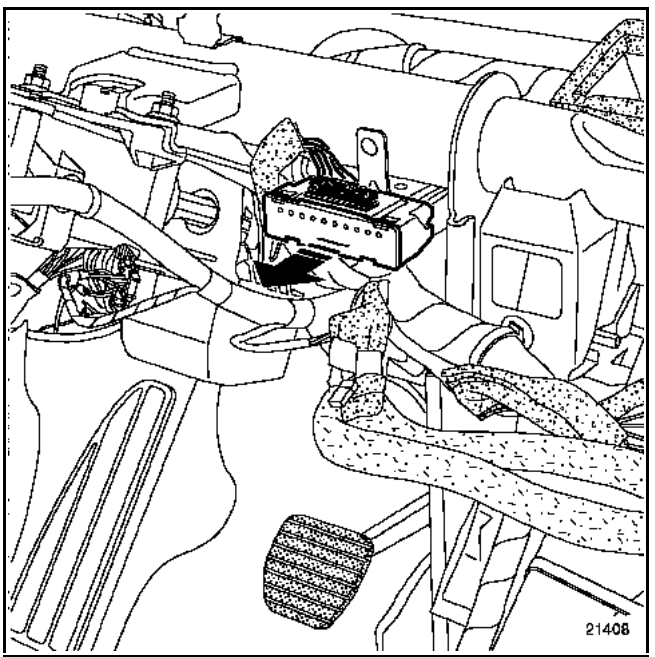

Red 15-track connector

Track	Description
1	Earth
2	Permanent +
3	+ After ignition feed
4	Not used
5	Not used
6	Multiplex connection (instrument panel)
7	Multiplex connection (instrument panel)
8	Not used
9	Not used
10	Radio mute output
11	Not used
12	Not used
13	Not used
14	Voice synthesiser speaker
15	Voice synthesiser speaker

Voice synthesiser speaker (A)

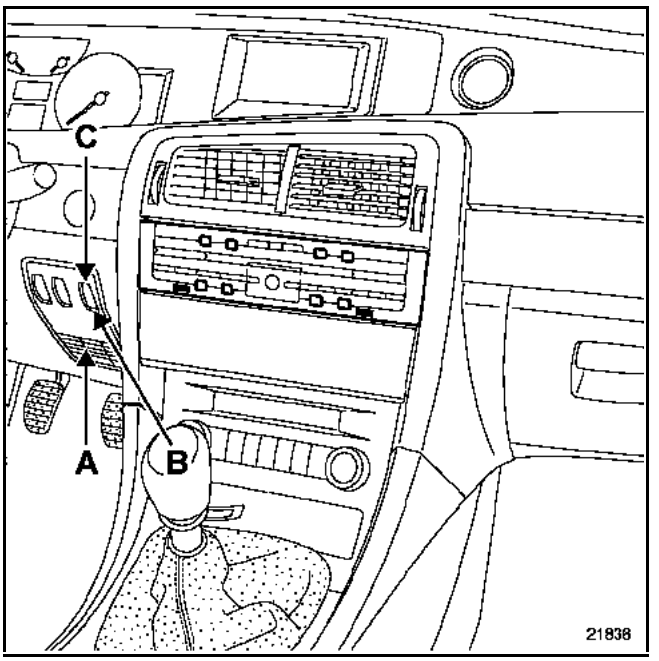

Mute (B) and **Repeat** (C) buttons.

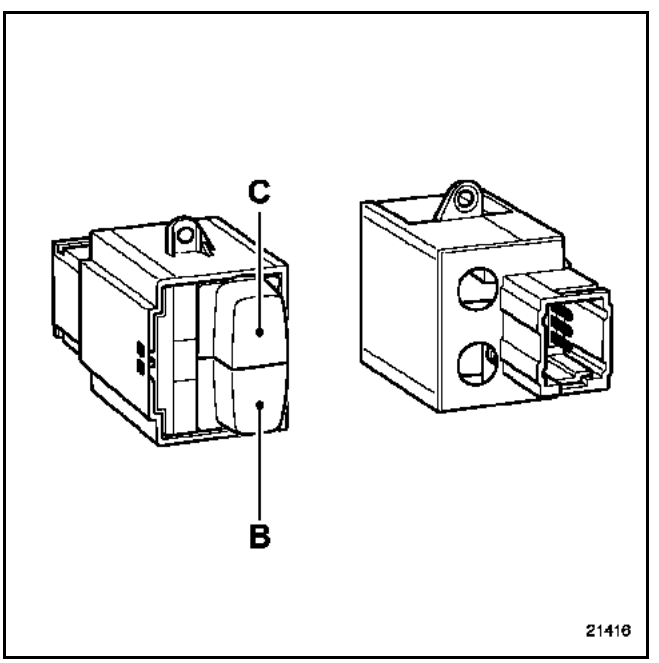

NOTE:
The **repeat** and **mute** buttons and the opening element opening signals are linked to the instrument panel.

GETtheMANUALS.org

VOICE SYNTHESISER SWITCHES

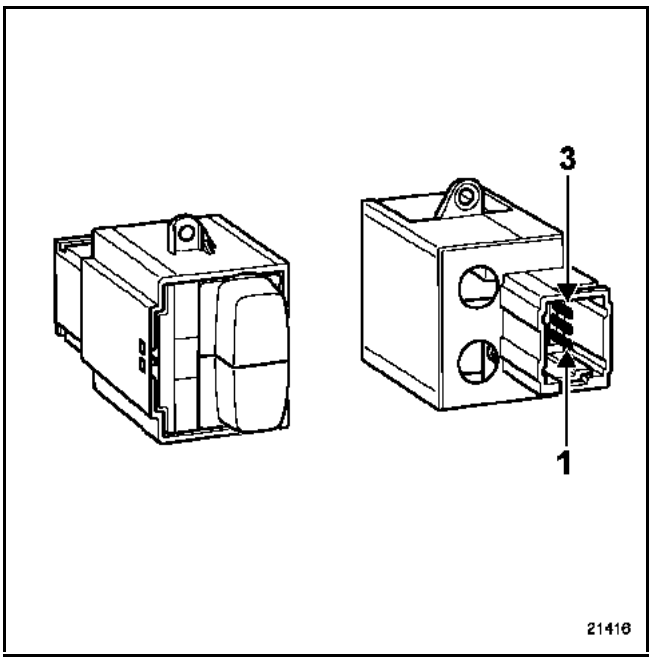

Track	Description
1	Message **repeat** control
2	Earth
3	**Mute** control

GETtheMANUALS.org

VOICE SYNTHESISER MESSAGES

- Welcome message
- Rear left door not closed
- Rear right door not closed
- Front left door not closed
- Front door not closed
- Tailgate not closed
- Bonnet not closed
- Driver's seat belt not fastened
- Lights on reminder
- Lights fault
- Right-hand brake light fault
- Left-hand brake light fault
- Number plate lights fault
- Battery charging fault
- Automatic parking brake on
- Automatic parking brake off
- Automatic parking brake level 1 fault
- Low screen wash level
- Diesel fuel level low
- Low LPG fuel level
- Low LPG
- LPG tank empty
- Oil low level
- Oil pressure fault
- Coolant temperature warning (engine overheating)
- Injection fault severity 1
- Injection fault severity 2
- Antipollution fault (OBD)
- LPG system fault
- Variable power assisted steering system fault
- Emergency braking fault
- ABS system fault
- Electronic stability program (ESP) fault
- Deactivation of the ESP system
- Proximity control out of order
- Proximity control fault
- Automatic transmission fault
- Excessive automatic transmission oil temperature
- Automatic transmission oil change request
- Engine immobiliser system fault
- Front left-hand tyre over-inflated or under-inflated
- Front right-hand tyre over-inflated or under-inflated
- Rear right-hand tyre over-inflated or under-inflated
- Rear left-hand tyre over-inflated or under-inflated
- Front left-hand tyre very deflated
- Front right-hand tyre very deflated
- Rear right-hand tyre very deflated
- Rear left-hand tyre very deflated
- Tyre pressure not checked
- Front left-hand tyre punctured
- Front right-hand tyre punctured
- Rear right-hand tyre punctured
- Rear left-hand tyre punctured
- Automatic opening elements locking active
- Automatic opening elements locking not active
- Child proof locking fault
- Fault detected in "discretion" mode (gong)

GETtheMANUALS.org

The "**Carminat**" navigation assistance system comprises a screen and a voice synthesiser to provide guidance for the driver.

This system can:

- find a specific location, such as:
  - a road, street or avenue
  - a hotel,
  - public services,
  - a garage or petrol station,
  - etc.

- select guidance modes in order to:
  - optimise journey time,
  - select the shortest distance
  - plan a route travelling on main roads
  - or take the scenic route,
  - avoid tolls.

Each mode is symbolised by a different icon that appears on the state line on the lower part of the screen.

- store addresses in the address book.

- display road maps of:
  - the present location,
  - or the destination,

- display the journey time

- receive written or spoken messages from the "**traffic information**" system.

N.B.: for information on operating the system and descriptions of the various menus, refer to the driver's handbook.

The **Carminat** system uses the **Vehicle speed** signal provided by the ABS computer to calculate the distance travelled along with the **Reversing** signal.

A multiplex network used exclusively by the "**Carminat**" system links the navigation computer to the Central Communications Unit and the display.

This system uses the following to function:

- a Central Communications Unit

- a console (an integral part of the Central Communications Unit),

- an electronic navigation computer comprising acceleration sensors (gyroscope) and a CD-ROM player,

- a satellite link (GPS aerial) that can locate the vehicle,

- a screen to display written data and maps,

- a speaker for giving voice instructions,

- a CD ROM with the cartographic map of the country the vehicle is delivered to,

- an FM aerial for traffic information messages.

NOTE

- If the vehicle has been moved with the ignition switched off, the navigation system may need a few minutes to find its exact location (see section on "**Re-location**")
- If the vehicle battery has been disconnected, the system may need up to **20 minutes** to calculate its exact location. The vehicle must be outdoors, with the navigation system switched on, in order to pick up satellite signals with the GPS aerial.
- The system can also operate without valid GPS data. Under these circumstances, there may be a loss of precision in pinpointing exact locations.
- Once the exact position has been located by the GPS system, the on-screen satellite symbol turns from red to green.
- When travelling on the motorway, the distance data provided by the system to indicate exits will differ from the information on the signs. This is because motorway signs calculate distance from the start of the motorway exit, while the **Carminat** system calculates from the end of the exit.

GETtheMANUALS.org

BASIC PRINCIPLES OF THE TRAFFIC INFORMATION SERVICE

In conjunction with navigation, the system uses information on traffic conditions: **TMC: Traffic Message Channel**.

The system uses:
- the navigation computer which receives, locates and recognises the information received,
- the TMC locators on the cartographic map CD-ROM,
- the information collected and disseminated (by public authorities) in RDS - TMC format (communications protocol).

IMPORTANT:
Renault is not responsible for the information collection and dissemination services in Europe, which are still in development.

TRAFFIC INFORMATION TERMINAL PROCESSING REMINDER

- the system should be fitted with the 2001-A or more recent cartographic map CD-ROM,
- TMC pictogram display logic:
  - ⇒ **red** = no traffic information available in this geographical location or poor reception,
  - ⇒ **black** = no traffic information locators on the CD,
  - ⇒ **green** = the system is locked onto a frequency that can supply traffic information.

The term **TMC** is replaced by the name of the service operator that the system has locked onto (if the operator uses a name).

The system can display in either text or pictogram form. It suggests a detour if a fault is located on the proposed itinerary.

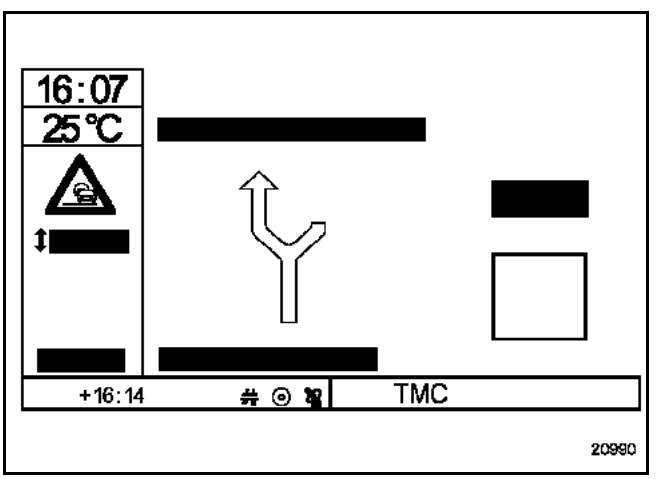

GETtheMANUALS.org

EXAMPLES OF TRAFFIC INFORMATION PICTOGRAMS

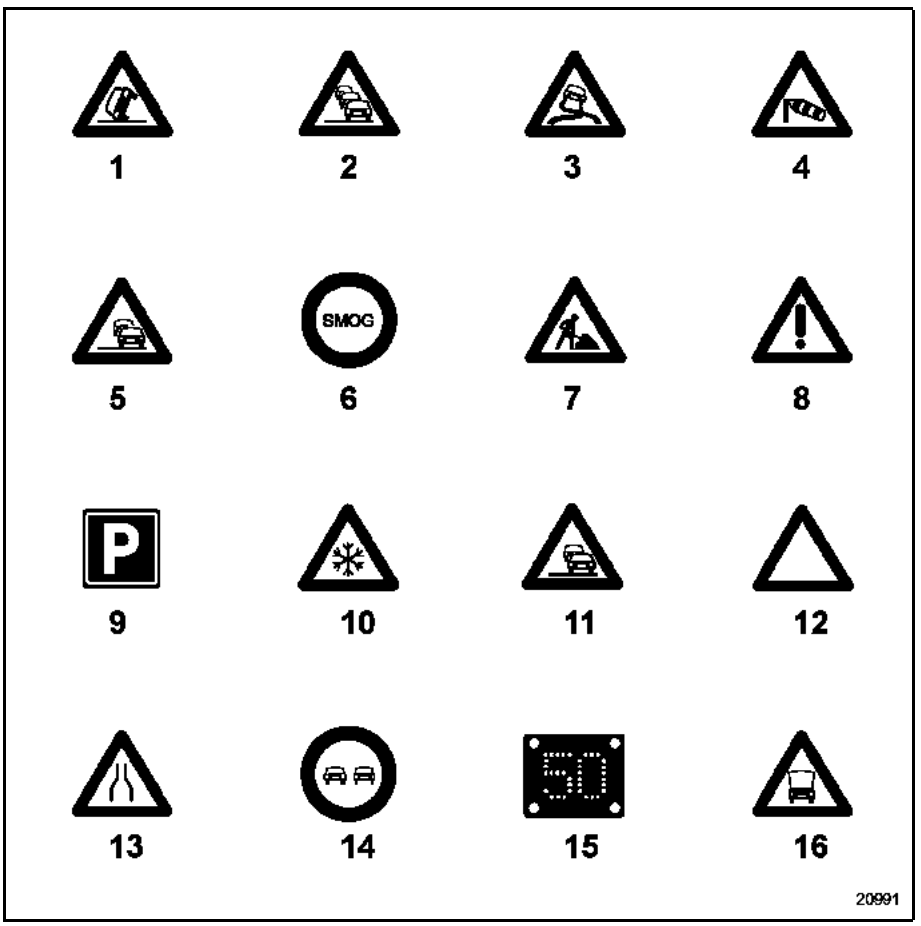

1 Accident
2 Traffic jam
3 Slippery conditions
4 Strong winds
5 Slow traffic
6 Fog
7 Road works
8 Danger
9 Parking possible
10 Bad weather
11 Slow traffic
12 Traffic problems in both directions
13 Road partially closed or narrowed
14 Vehicle travelling in the opposite direction
15 Restricted speed
16 Vehicle breakdown

GETtheMANUALS.org

DIAGRAM

1 Central Communications Unit
2 Control keypad
3 Carminat computer (CD-ROM reader)
4 Screen
5 Seat belt information (for display)
6 External temperature information (for display)
7 Radio
8 Voice synthesiser speaker
9 Steering wheel radio control
10 Radio aerial
11 Radio connection (mute)
12 Vehicle's multiplex connection
13 GPS aerial

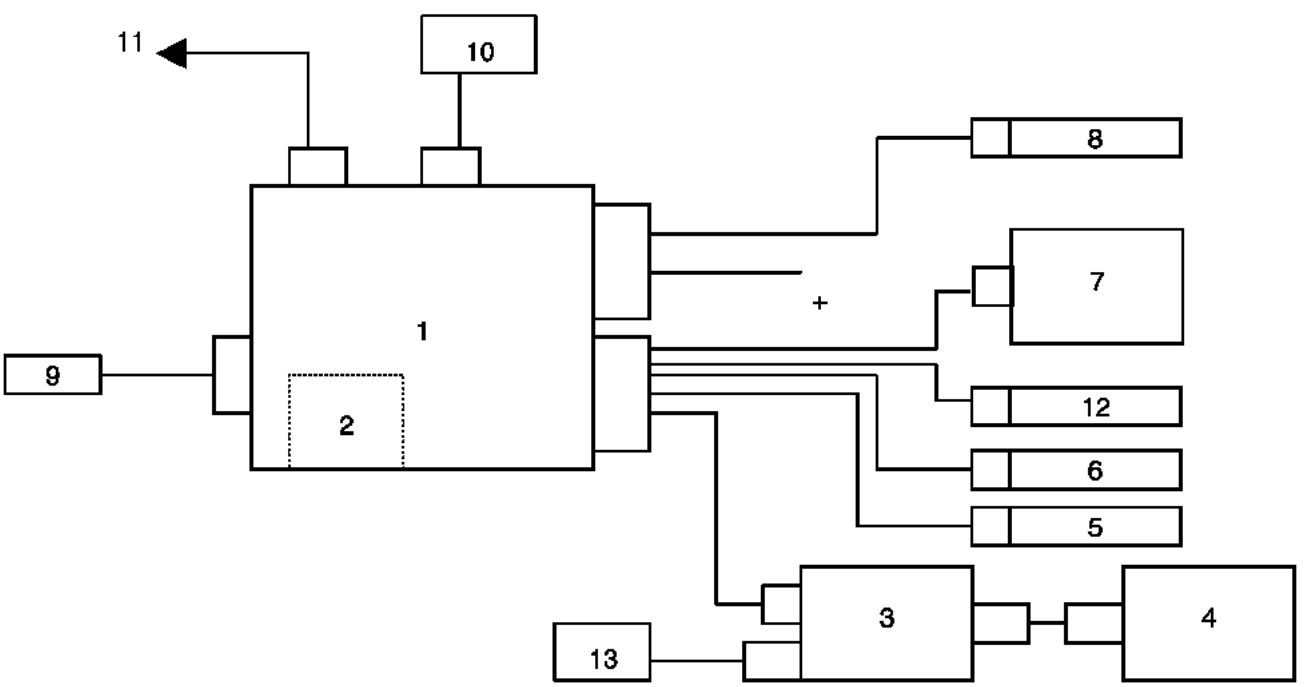

19241

GETtheMANUALS.org

To be operational, the **Carminat** navigation computer must be connected to a central communications unit.

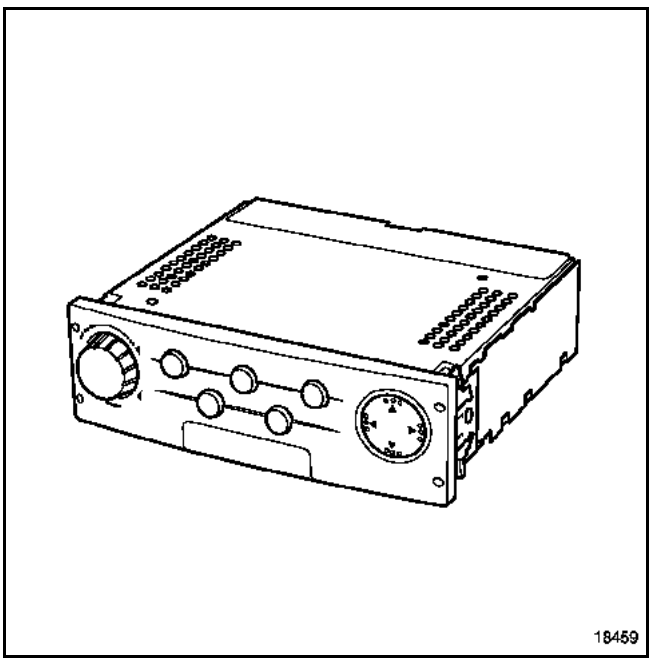

The Central Communications Unit can:
- act as a go-between for the vehicle's multiplex network and the Carminat system network,
- use multiplex data,
- control the steering wheel command for the radio or console,
- control braking conditions, and the vehicle and system configurations,
- control the display on the screen (via the CD-ROM player),
- receive written or spoken messages from the **traffic information** system (via the radio aerial)
- manage voice synthesiser and navigation messages,
- transfer data from the radio for display.

REMOVAL

The Central Communications Unit is located behind the cover, under the radio or CD changer.

IMPORTANT:
Do not disconnect the central communications unit before the system has completely stopped (about 45 seconds).

Removal is carried out using tool **Ms.1373**

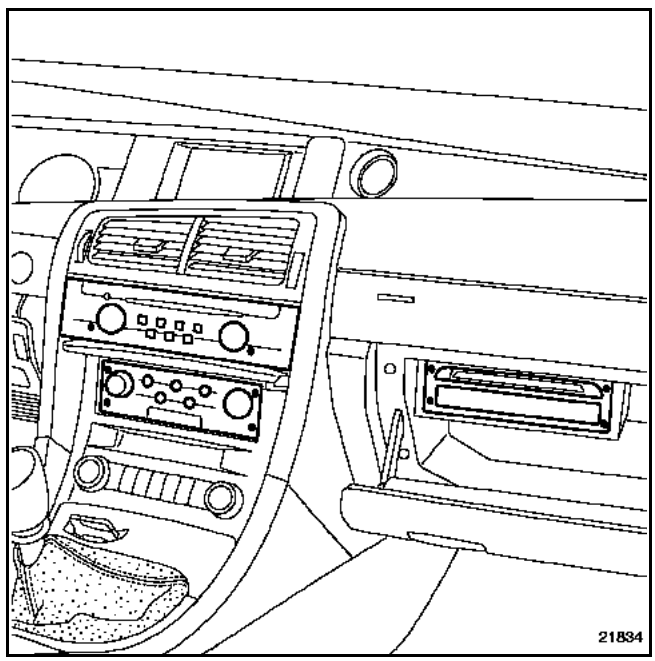

REFITTING

Set the system. Refer to the "**Initialisation**" section.

GETtheMANUALS.org

CONNECTOR ALLOCATIONS

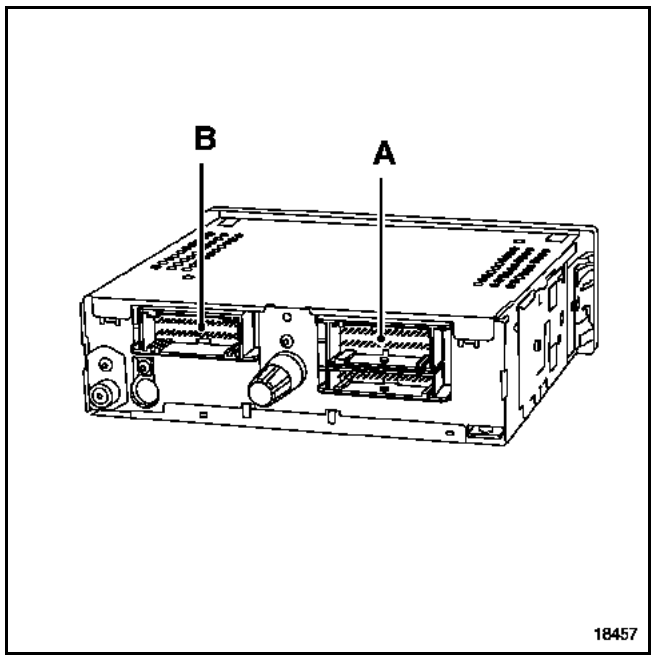

15-track connector (A) (red):

Track	Description
1	Not used
2	Not used
3	Not used
4	Not used
5	Not used
6	Not used
7	Not used
8	Not used
9	Radio control satellite (track B1)
10	Radio control satellite (track A3)
11	Radio control satellite (track B2)
12	Radio control satellite (track B3)
13	Radio control satellite (track A2)
14	Radio control satellite (track A1)
15	Not used

30-track connector (B) (grey):

Track	Description
1	Not used
2	Aerial amplifier output
3	Multiplex connection (multimedia)
4	Multiplex connection (multimedia)
5	Not used
6	Not used
7	Computer on-off output
8	Computer audio link
9	Computer audio link
10	Not used
11	Not used
12	Not used
13	Not used
14	Not used
15	Not used
16	Exterior temperature signal (input)
17	Exterior temperature signal (input)
18	Not used
19	Not used
20	Not used
21	External temperature output
22	Not used
23	Not used
24	Seat belt warning light
25	+ lighting
26	Radio connection (track 6)
27	Radio On/Off (track 5)
28	Radio connection (track 3)
29	Radio connection (track 1)
30	Radio connection (track 2)

GETtheMANUALS.org

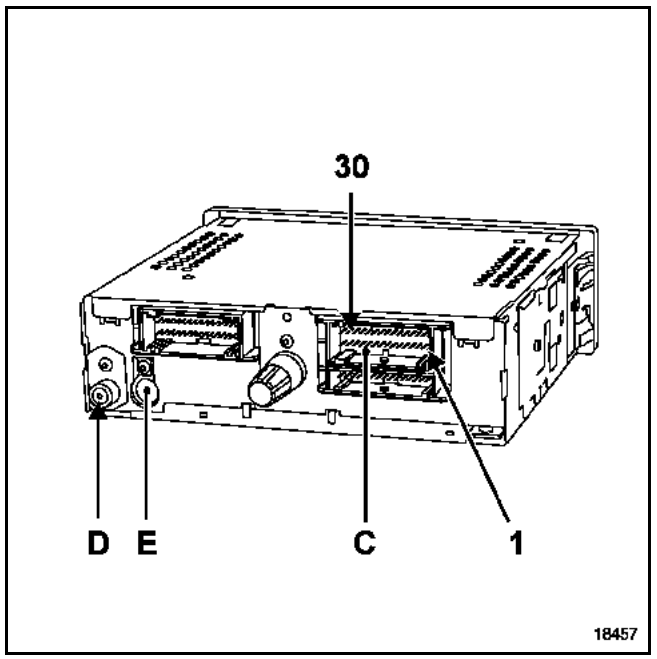

(D) and (E): radio aerial input and output

30-track connector (C) (green):

Track	Description
1	Not used
2	Not used
3	Not used
4	Not used
5	Not used
6	Multiplex connection (vehicle)
7	Multiplex connection (vehicle)
8	Not used
9	+ accessories feed
10	+ before ignition
11	Radio mute control
12	Earth
13	Not used
14	Voice synthesiser computer
15	Voice synthesiser computer
16	Not used
17	Not used
18	Not used
19	Not used
20	Not used
21	Not used
22	Speaker output
23	Speaker output
24	Not used
25	Not used
26	Not used
27	Not used
28	Not used
29	Not used
30	Not used

GETtheMANUALS.org

NAVIGATION COMPUTER (CD ROM player)

This system operates by using sensors which detect the vehicle's movements. The vehicle's engine speed sensor (or ABS) sensor calculates the distance travelled while the gyroscope (inert compass) in the computer registers the movements made when the vehicle turns bends and corners.

By making comparisons with the digital map (on the CD-ROM), the system corrects inaccuracies, (tyre pressure and wear, temperature etc.) in order to pinpoint the vehicle's location.

IMPORTANT:
If the battery has been disconnected or the navigation computer replaced, relocation of the vehicle is automatic (refer to the **Relocation** section).

The system will be programmed in French by default after the navigation computer has been replaced.
To change the language, refer to the **Change of language** section.

IMPORTANT:
A new navigation system computer will not be able to recall addresses stored in the old unit.

NOTE:
- With the ignition off, the CD-ROM player lights up automatically when the eject button is pressed and will remain lit for about **1 minute** (if the ignition is not switched back on).
- The player lights up automatically when the ignition is turned on.
- After the ignition is switched off, the player remains on for **approximately 45 seconds, during which time the battery must not be disconnected**.

GETtheMANUALS.org

CONNECTOR ALLOCATIONS

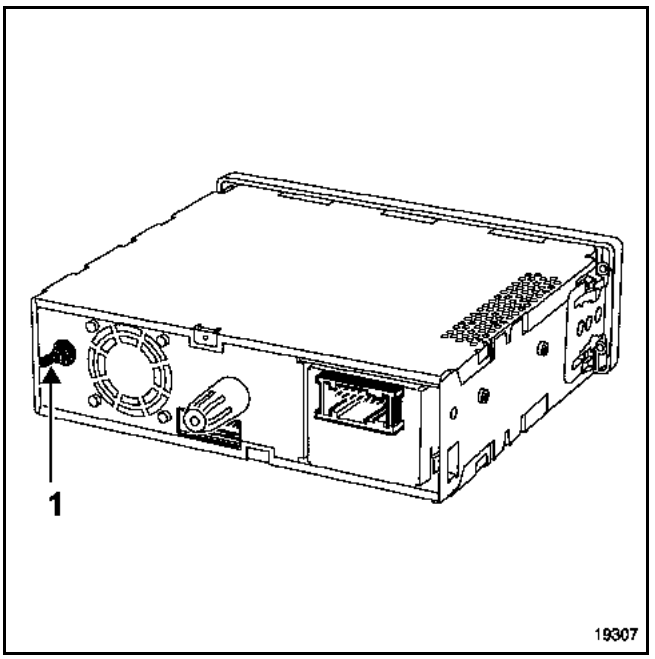

(1) GPS aerial connection

18-track connector (2) to the vehicle

Track	Description
1	+ Before ignition
2	Not used
3	Central Communications Unit audio
4	link
5	Not used
6	Not used
7	Computer on-off input
8	Not used
9	Not used
10	Multiplex connection (multimedia)
11	Earth
12	Not used
13	Central Communications Unit audio
14	link
15	Not used
16	Not used
17	Vehicle speed signal
18	Not used
	Not used
	Multiplex connection (multimedia)

16-track connector (3) to the display:

Track	Description
1	Not used
2	Earth
3	- Video signal
4	Red video signal
5	Green video signal
6	Blue video signal
7	Earth
8	Video synchronisation signal
9	Earth
10	Brightness adjustment
11	Not used
12	Display On/Off
13	Not used
14	Not used
15	+ Before ignition
16	+ Before ignition

GETtheMANUALS.org

REMOVAL

The computer including the CD-ROM player is located in the glovebox.

IMPORTANT:
Do not disconnect the computer before the system has completely shut down (about **45 seconds**).

Removal is carried out using tool **Ms.1373**

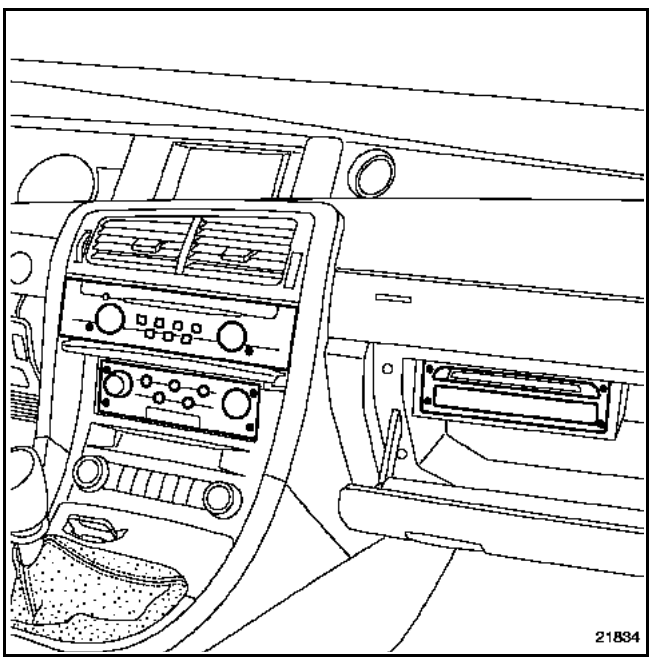

REFITTING

Set the system. Refer to the **Initialisation** section.

GETtheMANUALS.org

The screen can display:
– the various menus,
– the destination direction
– the distance from the destination
– the journey maps
– the distance remaining until the next change of direction,
– the cartographic maps
– etc.

It lights up for a few seconds after the "Auxiliaries" position or the radio is switched on and displays the security message.

It extinguishes completely after approximately **45 seconds** after the feed is switched off.

NOTE:
The screen colour and brightness can be altered using the **Screen configuration** menu.
– daytime blue or dark blue (side lights off).
– night time blue or dark blue (side lights on).

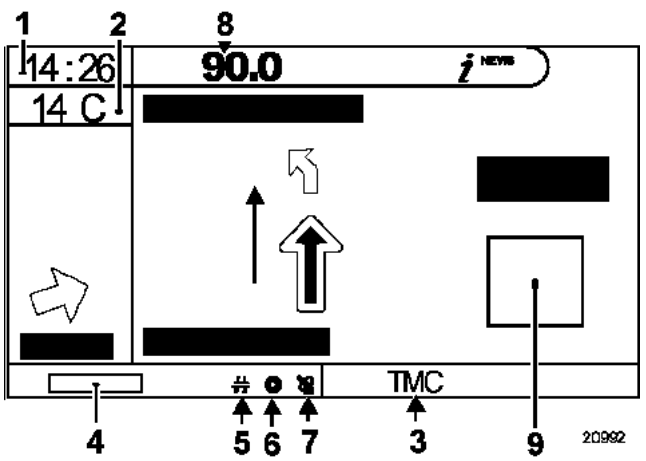

1 Not used
2 External temperature
3 Traffic Information message pictogram
4 Arrival time
5 Guidance mode pictogram
6 Disc present pictogram
7 Satellite reception quality pictogram
8 Radio display
9 Opening elements and seat belt display

Special notes for radio

If the vehicle is fitted with an original radio, the display will appear on the screen bar (radio on only).

When the radio is being adjusted, the radio display fills the screen (for greater visibility) in **list** or **preset** mode.

NOTE:
If the information associated with the radio does not appear on screen, refer to the **Initialisation** section.

IMPORTANT:
Do not use cleaning agents to clean the screen (clean with a dry cloth or a damp cloth).

GETtheMANUALS.org

CONNECTIONS

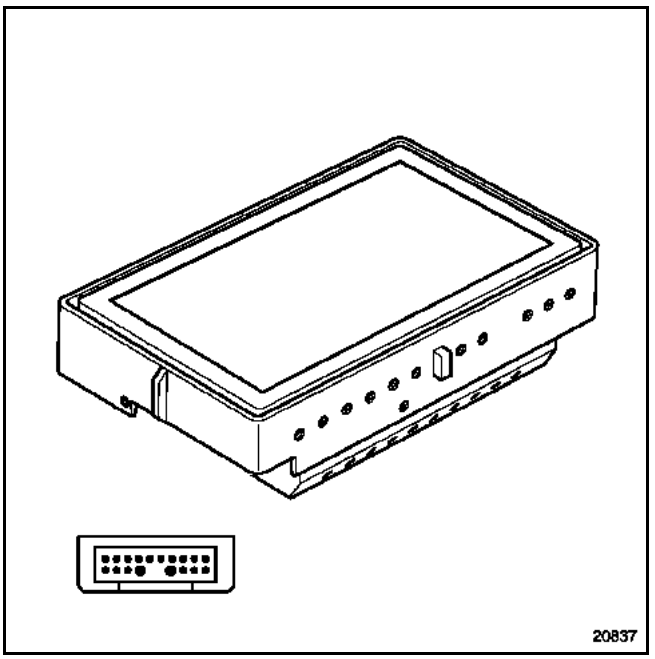

Track	Description
1	Not used
2	Earth
3	- Video signal
4	Red video signal
5	Green video signal
6	Blue video signal
7	Earth
8	Video synchronisation signal
9	Earth
10	Brightness adjustment
11	Not used
12	Display On/Off
13	Not used
14	Not used
15	+ Before ignition
16	+ Before ignition
Shielding	Earth shielding

REMOVAL - REFITTING

The instrument panel must be removed to remove the screen.

Remove:
– the upper instrument panel trim clipped onto the dashboard,

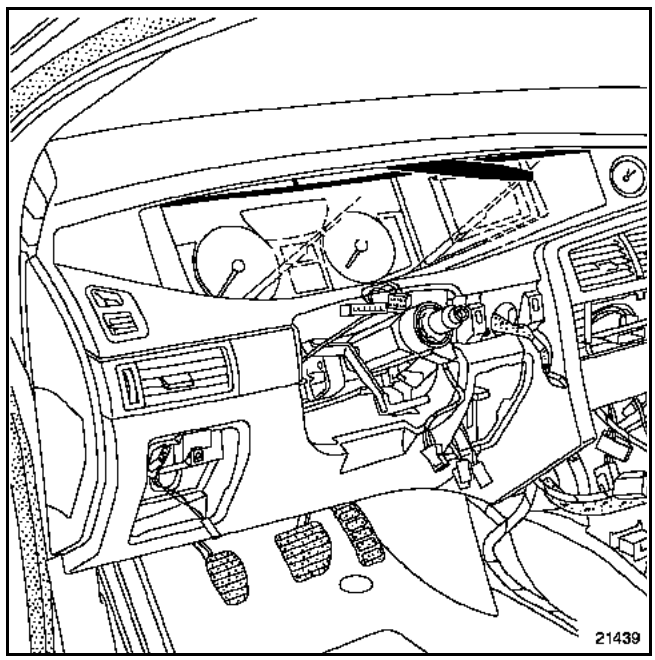

– the lower instrument panel trim clipped onto the dashboard,

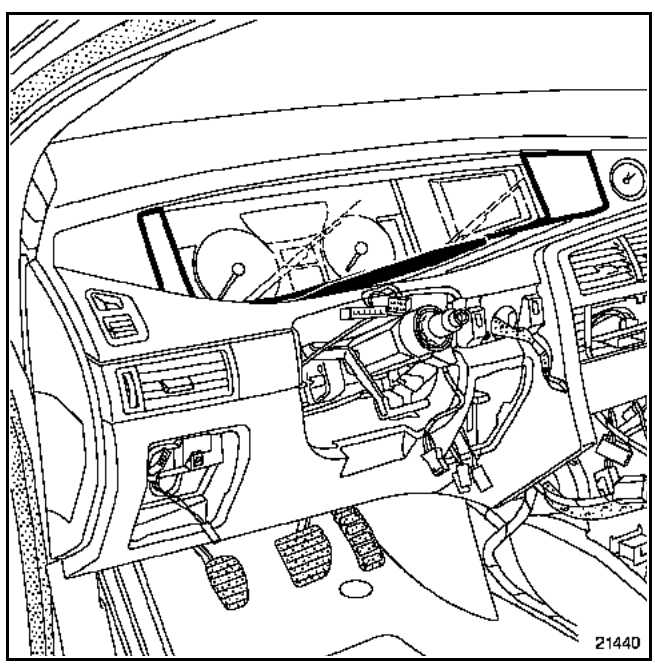

GETtheMANUALS.org

– the instrument panel mounting bolts.
– the screen mounting bolts on the instrument panel.

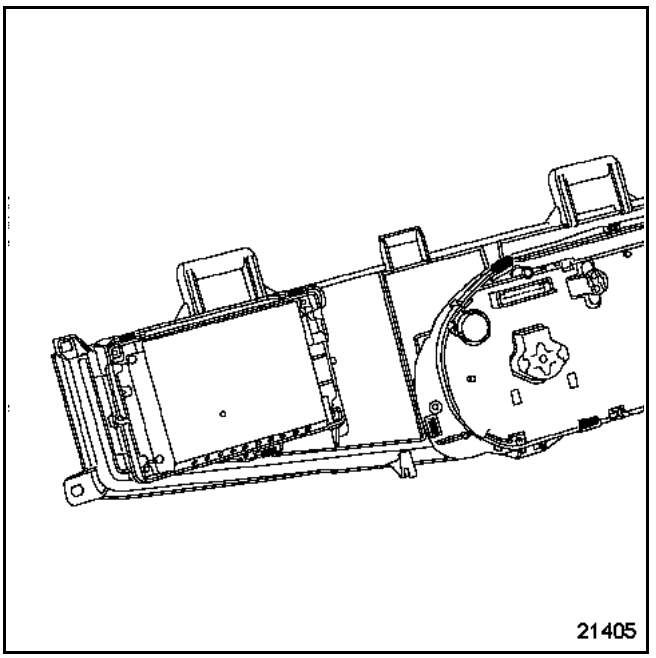

GETtheMANUALS.org

GPS AERIAL

It picks up satellite signals to allow the electronic navigation computer (CD-ROM player) to locate the position of the vehicle.

When the GPS reception (satellite) is good, a **green** pictogram (1) is displayed on screen.

When the satellite reception is poor (caused by going through a tunnel or along a street hemmed in by tall buildings, etc.), a **red** pictogram is displayed on screen.

NOTE:
After the battery has been disconnected or navigation computer replaced, relocation is automatic: park the vehicle in an open area outdoors with the ignition off and wait a few minutes. When the GPS reception (satellite) is good, a **green** pictogram will be displayed on screen.

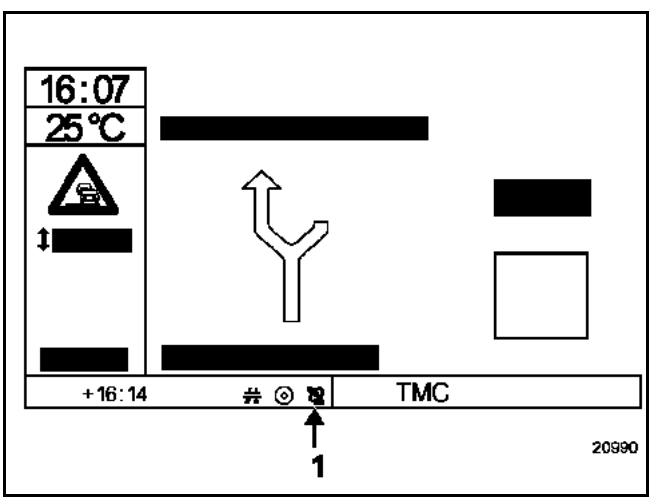

IMPORTANT:
The GPS aerial wire is very fragile, do not bend or pinch it.

NOTE:
The GPS aerial is also used for the hands-free telephone.

DUAL BAND AERIAL

The aerial is fitted on the roof. The headlining and rear right-hand quarter panel must be partially removed to remove the aerial. See the bodywork section.

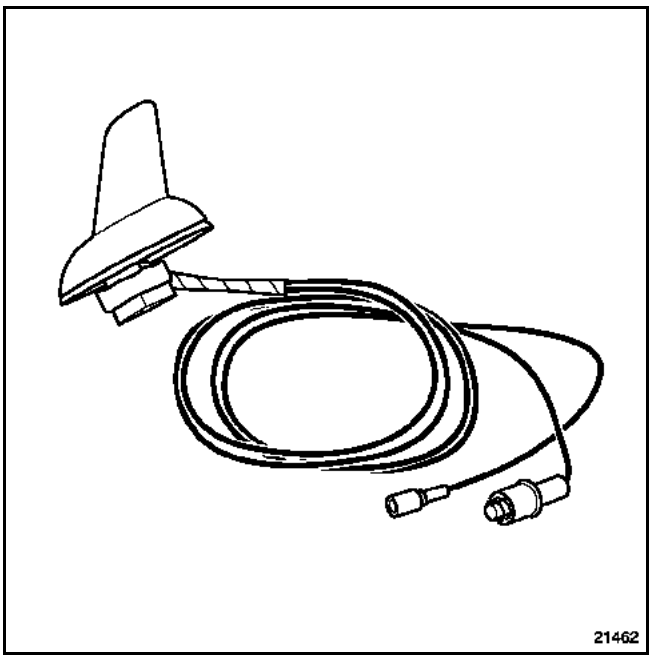

GETtheMANUALS.org

This procedure must be carried out each time any operation is performed on the system.

IMPORTANT:
If the vehicle is fitted with a radio, it must be switched on during initialisation. If it is not, the steering wheel radio control will not function and the screen will not display radio data.

1 Switch off ignition,
2 Wait until the **system shuts down completely (about 45 seconds)**,
3 Switch the radio on,
4 Switch on the ignition (wait approximately **20 seconds**),
5 Press the **M** and **C** buttons at the same time,
6 Read the vehicle part number

System configurations	
Entry level radio	**Top of the range radio**
0102	0107

7 Carry out the steering wheel control test,
8 The GPS aerial connection displays on the screen (Connected - not connected),
9 Ignore radio aerial and telephone tests,
10 Exit setting using the rotary switch,
11 Switch off ignition (**1 minute**).

NOTE:
If the configuration does not match, test the vehicle wiring (multiplex lines) and part numbers.

GETtheMANUALS.org

The system will be programmed in French by default after the navigation computer has been replaced.

1 With the ignition switched on, press the eject button to remove the electronic navigation computer map CD

2 The screen will display the message **No CD in the player**.

3 Confirm **OK** by pressing the knob.

4 Select the **Configurations** menu then **Language**.

NOTE:
If the desired language does not appear in the menu, do the following:

1 Select **other language**.

2 The system will tell you to insert the language CD.

3 Insert the CD, and then press the rotary knob to confirm.

4 Select the language to be replaced (language 1 or 2) by turning the knob.

5 Use the **load** rotary knob to select the correct language to load from the list of available languages stored on the CD.

6 Wait a few seconds. The screen will turn black and then white and display a message in black and red with a horizontal bar to show the loading time remaining.

7 When loading is complete, the language CD will be ejected from the player and the screen will read **OK**.

8 Continue with voice message changing procedure.

9 Re-insert the map CD into the player.

GETtheMANUALS.org

The vehicle has to be relocated after the electronic navigation computer has been replaced or the battery disconnected.

Drive the vehicle to an open area outdoors and wait for a few minutes with the ignition switched on.

When the GPS reception (satellite) is good, a **green** pictogram (1) is displayed on screen.

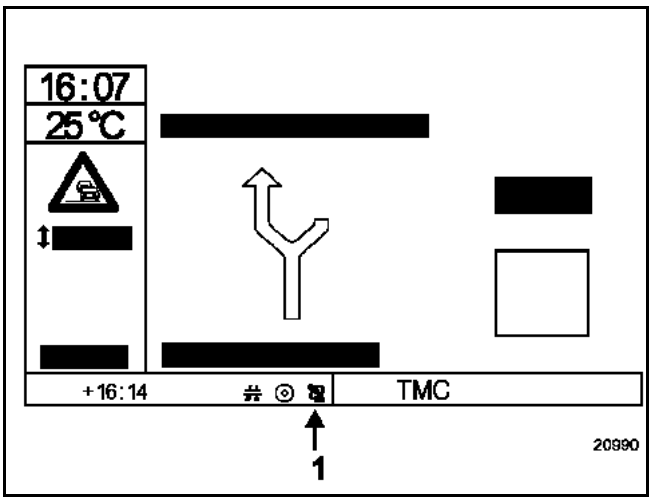

If the vehicle is not correctly located on the cartographic map, drive the vehicle to along different main roads on the mapped routes (**0.6 to 1.8 miles (1 to 3 km)** necessary).

NOTE:
The localisation operation may take up to **20 minutes** maximum.

GETtheMANUALS.org

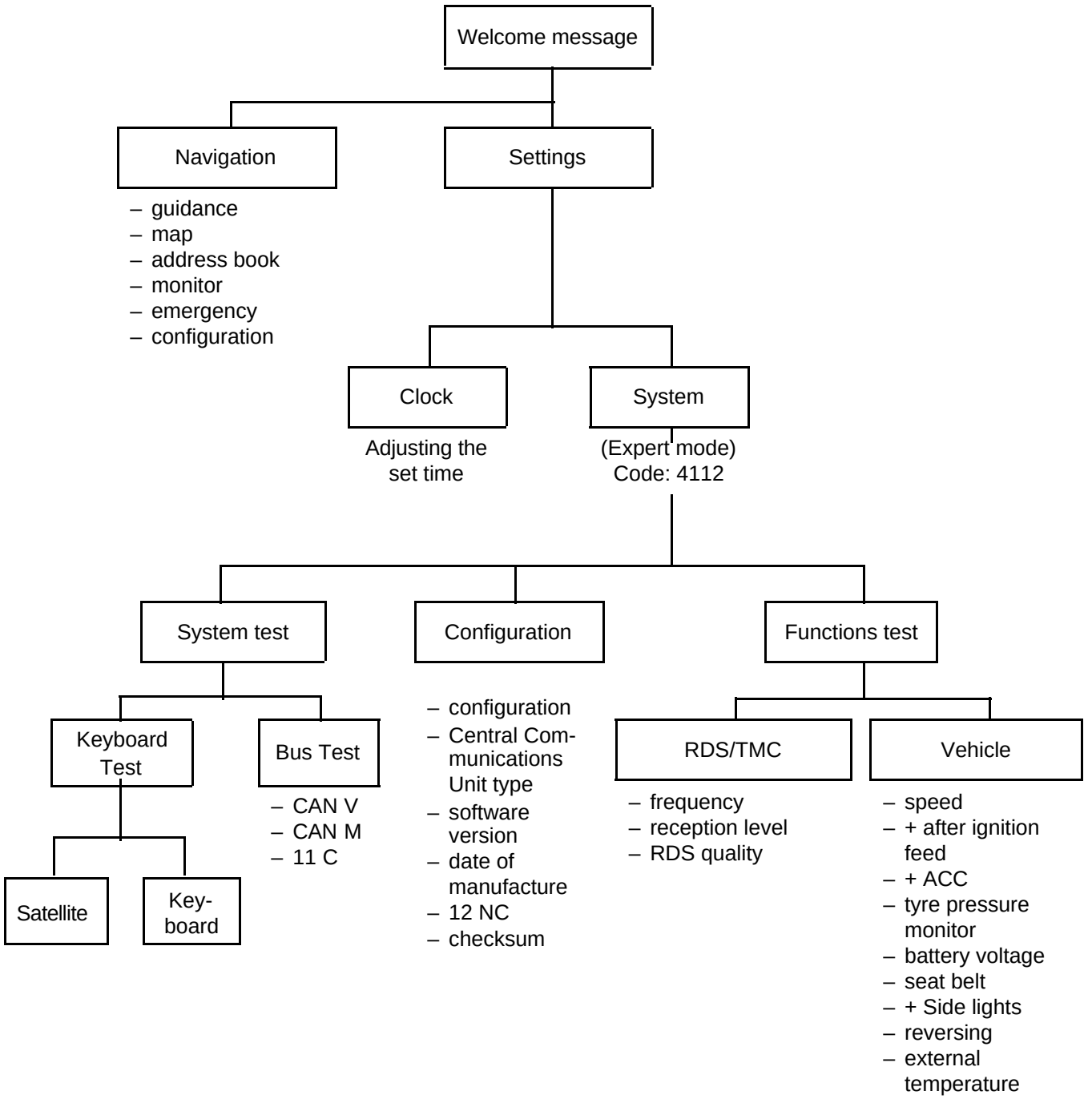

GETtheMANUALS.org

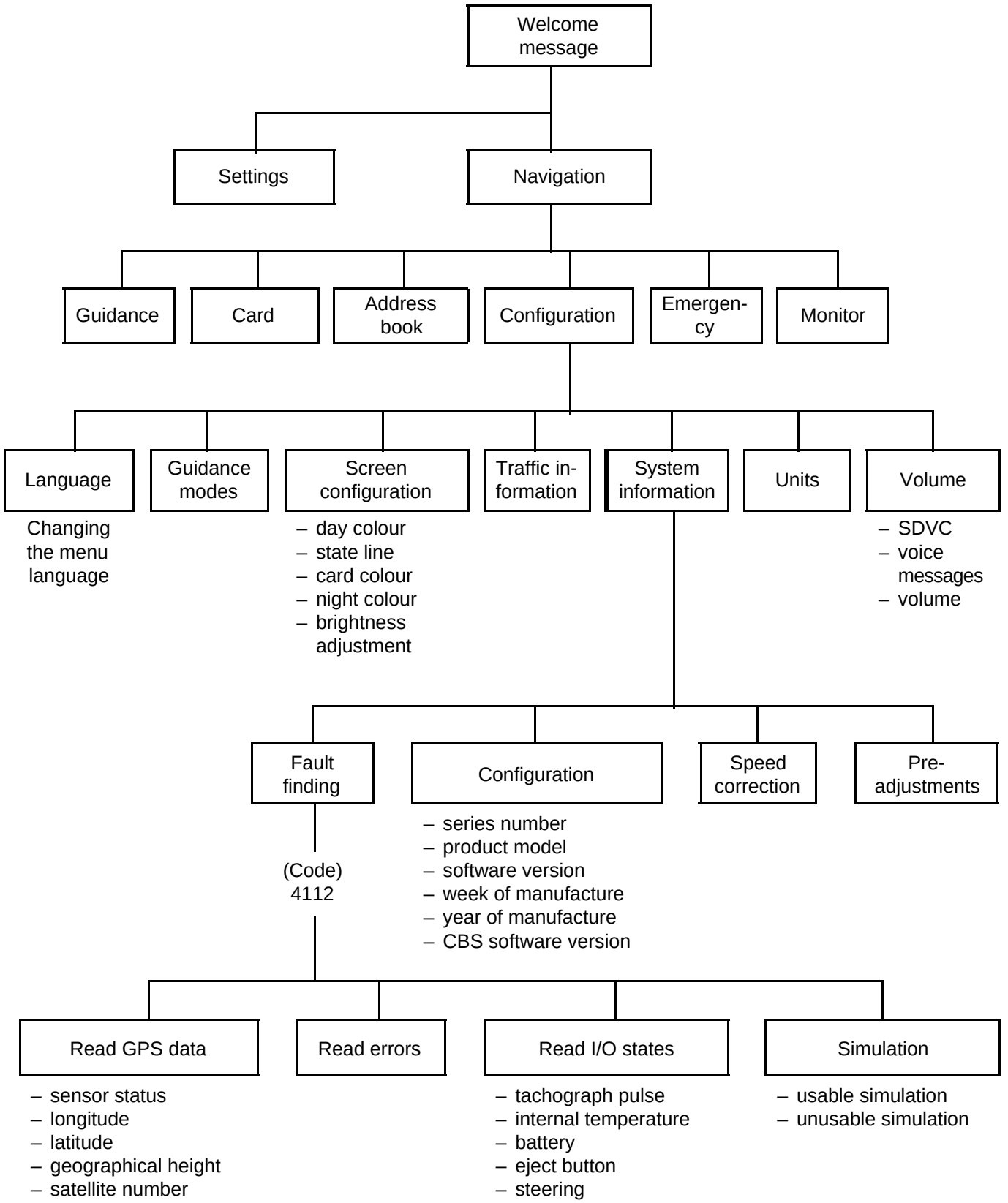

GETtheMANUALS.org

THE SCREEN STAYS BLACK

THE SCREEN IS LIT UP OR STUCK ON THE RENAULT BADGE

THE DISPLAY ON THE SCREEN STAYS FIXED

THE SCREEN DISPLAYS **CONFIGURATION ERROR**

NO OPENING ELEMENT SYMBOL DISPLAY

NO SEAT BELT WARNING LIGHT DISPLAY

NO RADIO DISPLAY ON THE **CARMINAT** SCREEN (OR THE RADIO DISPLAY STAYS FIXED)

NO VOICE MESSAGES

NO TRAFFIC INFORMATION MESSAGE ON THE SCREEN

POOR GPS RECEPTION

GETtheMANUALS.org

Screen stays black (not lit up)

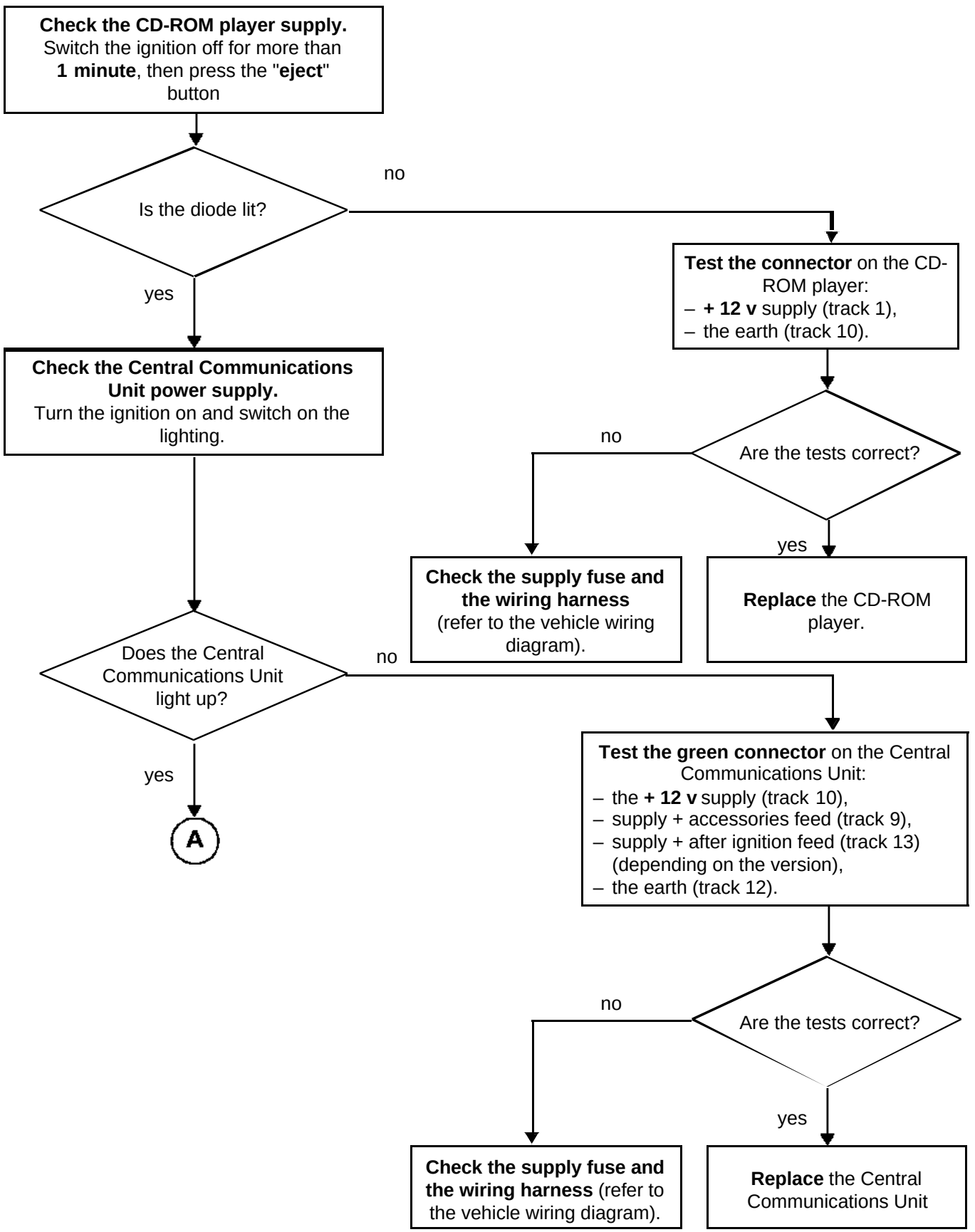

GETtheMANUALS.org

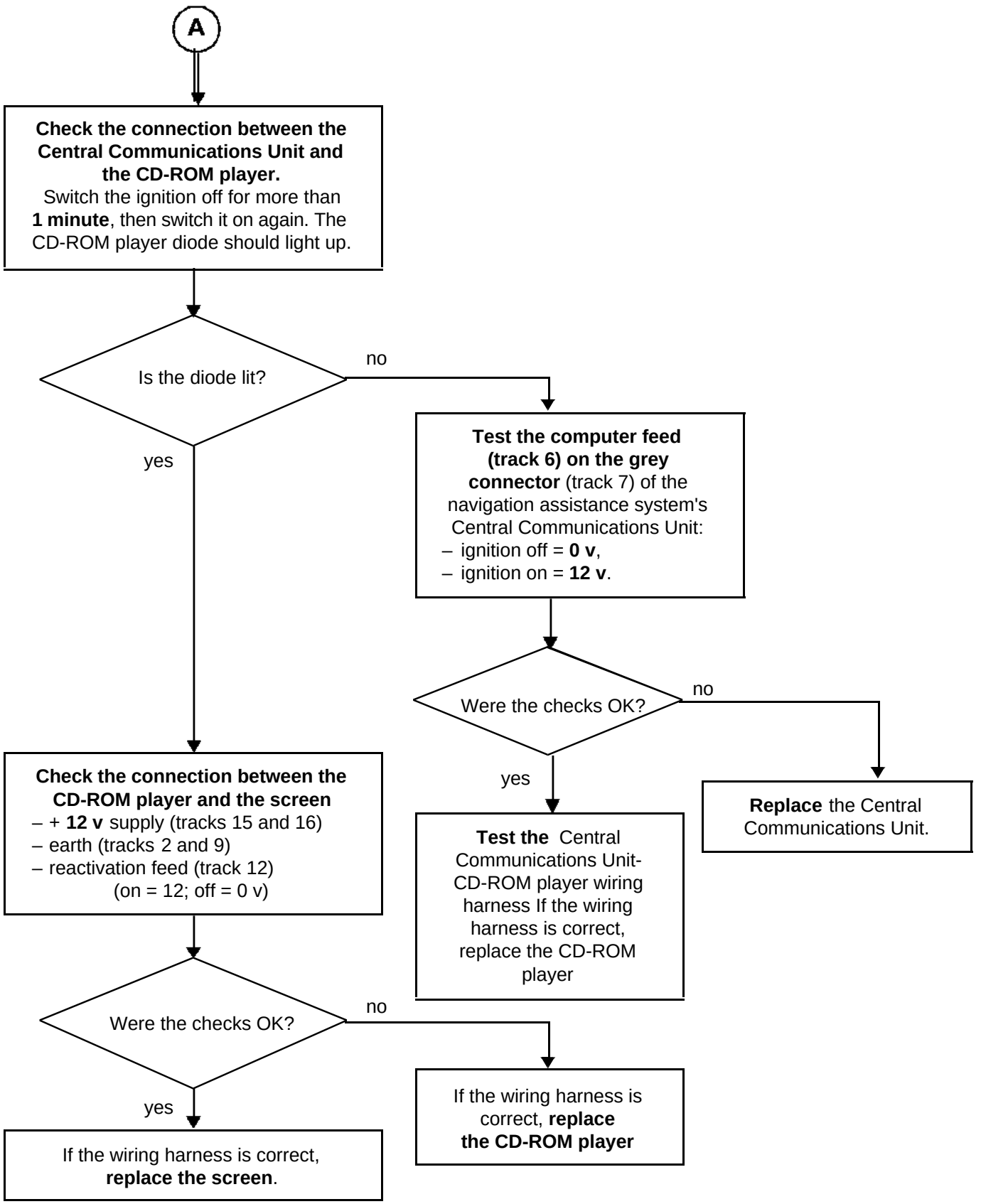

GETtheMANUALS.org

The screen is lit up or locked on the Renault badge

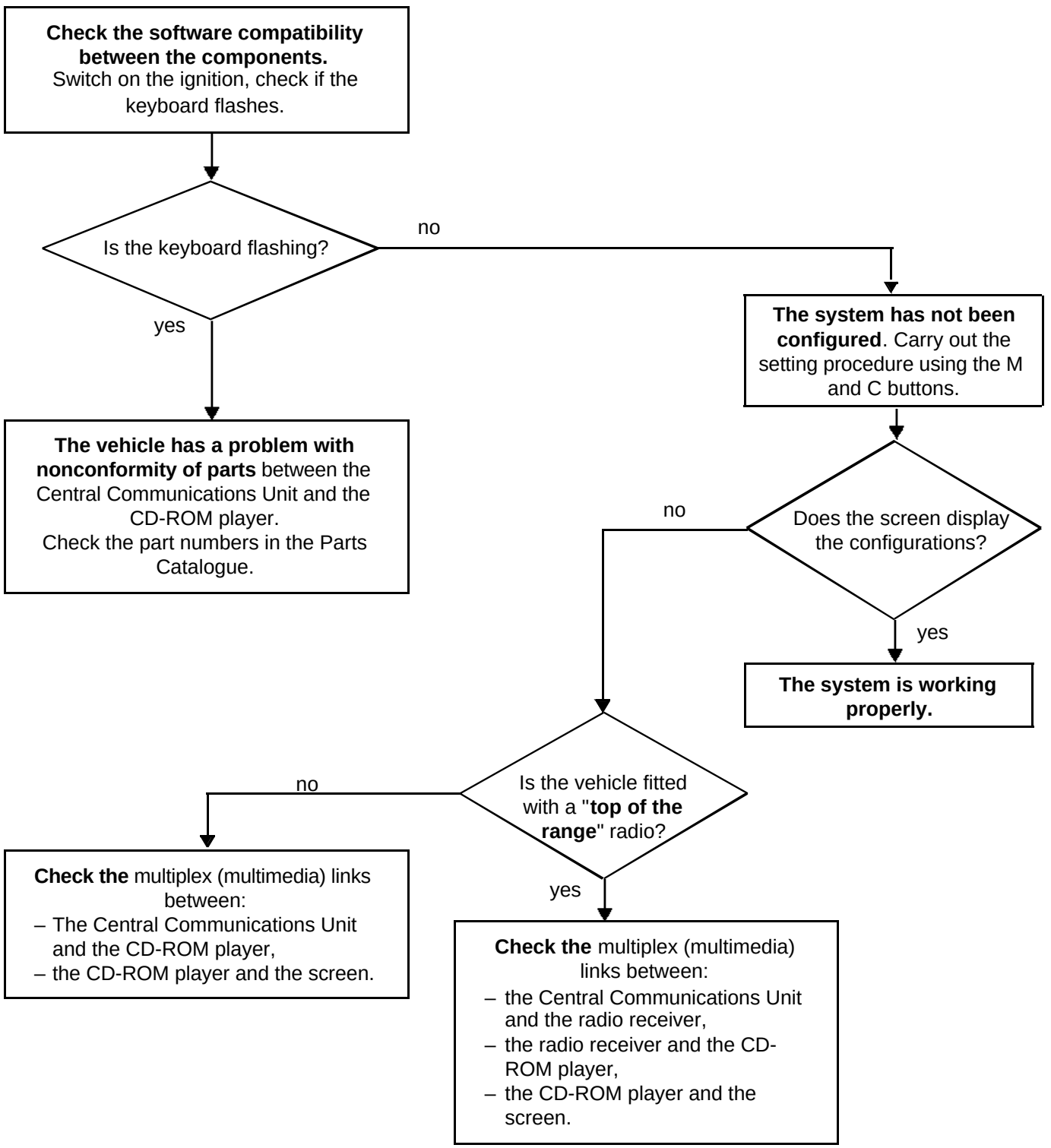

GETtheMANUALS.org

The display on the screen remains fixed (on any page)

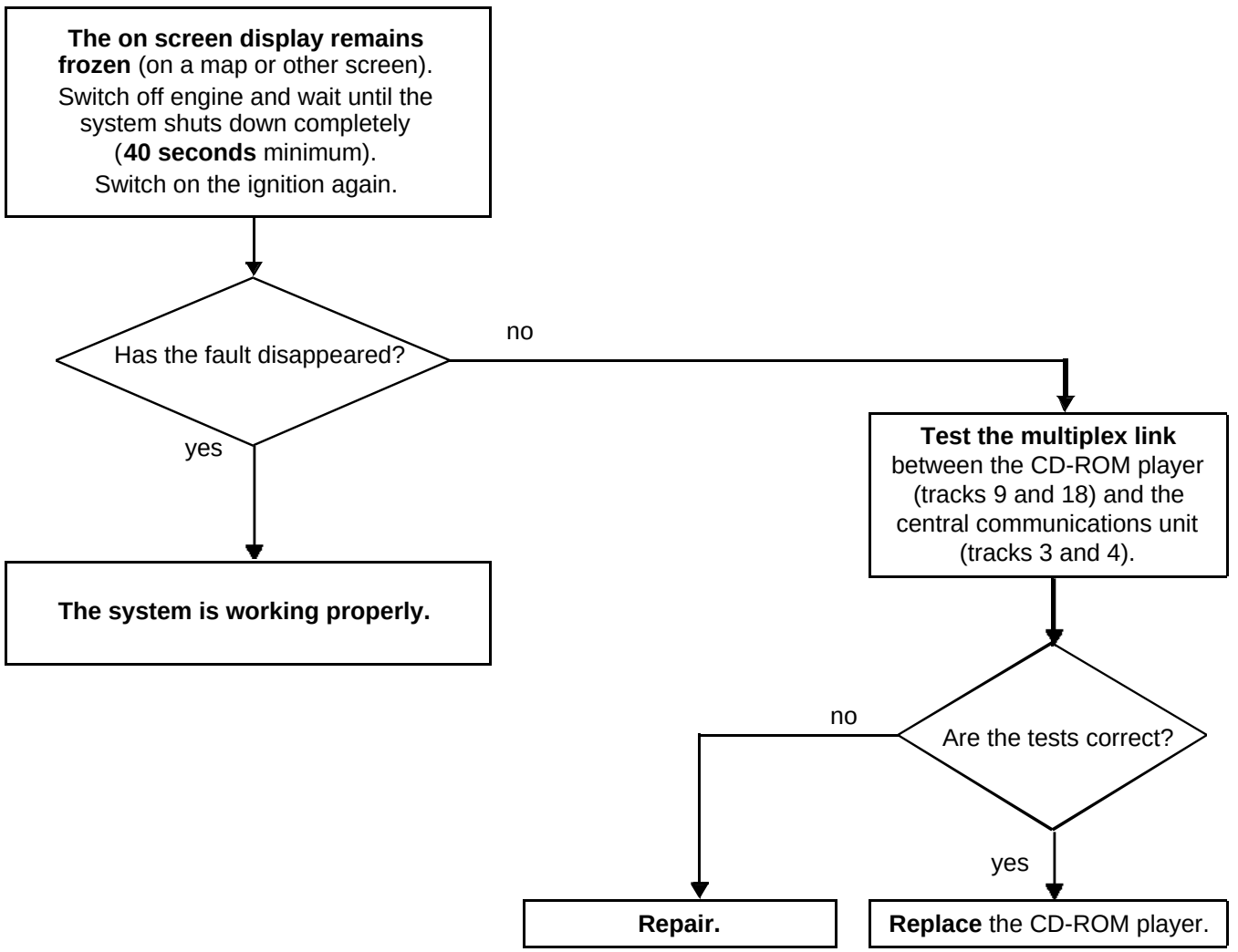

GETtheMANUALS.org

The screen displays "configuration error"

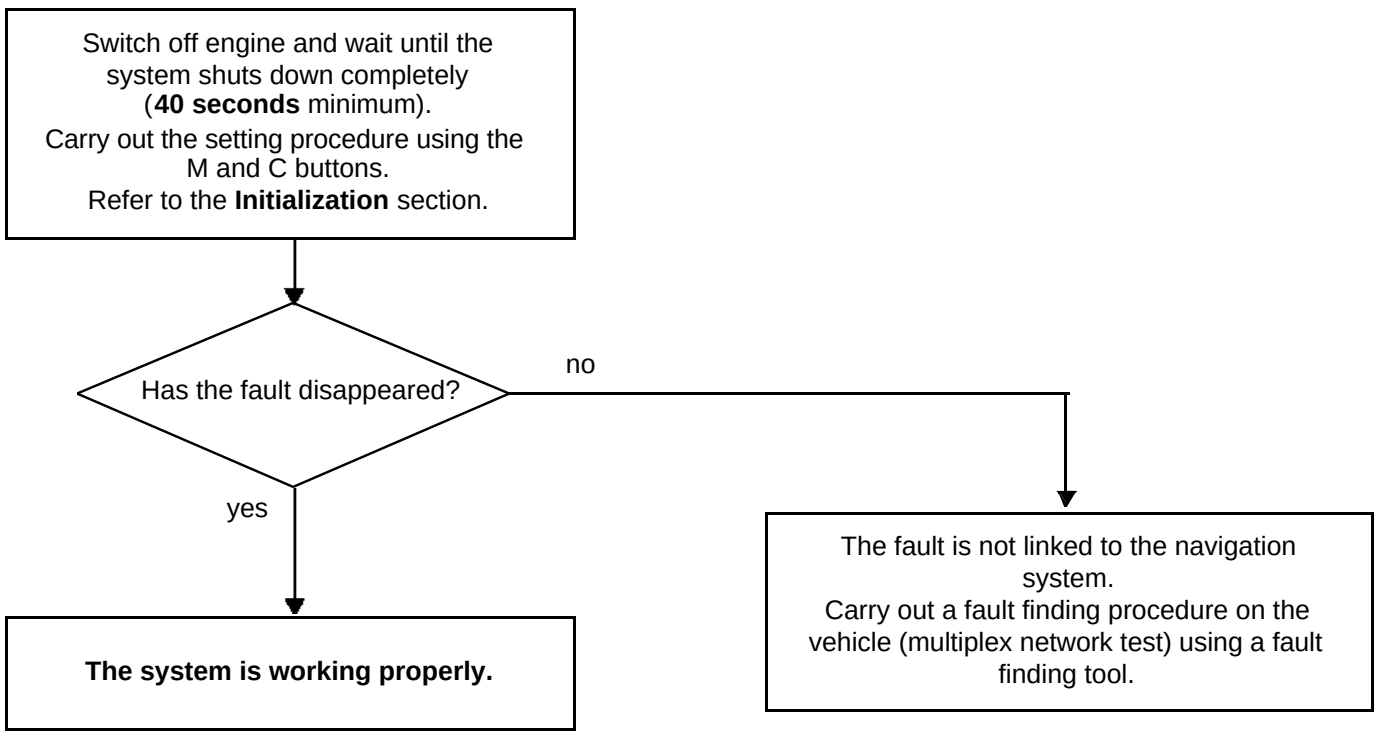

GETtheMANUALS.org

No opening element symbol display

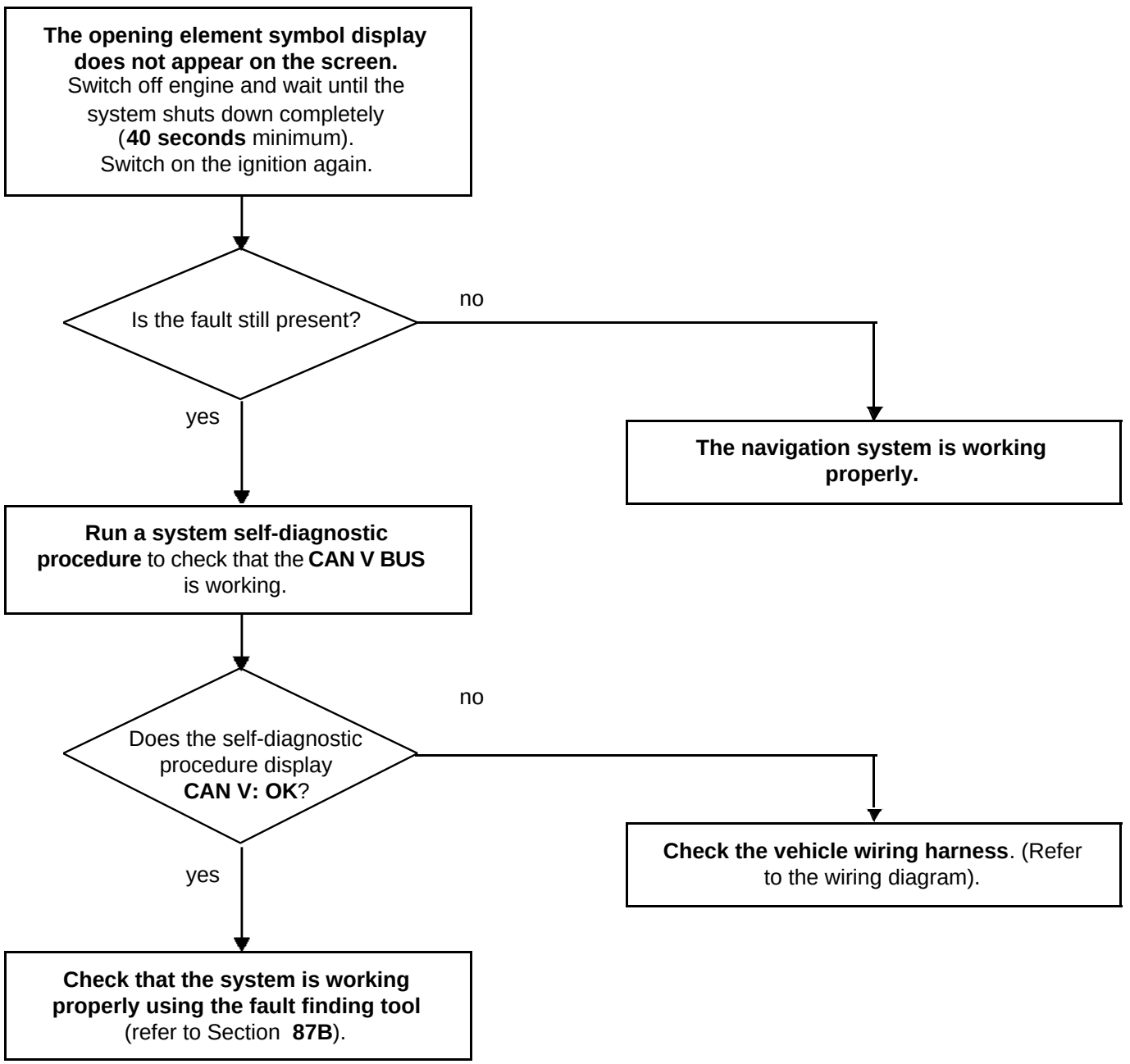

GETtheMANUALS.org

No seat belt warning light display

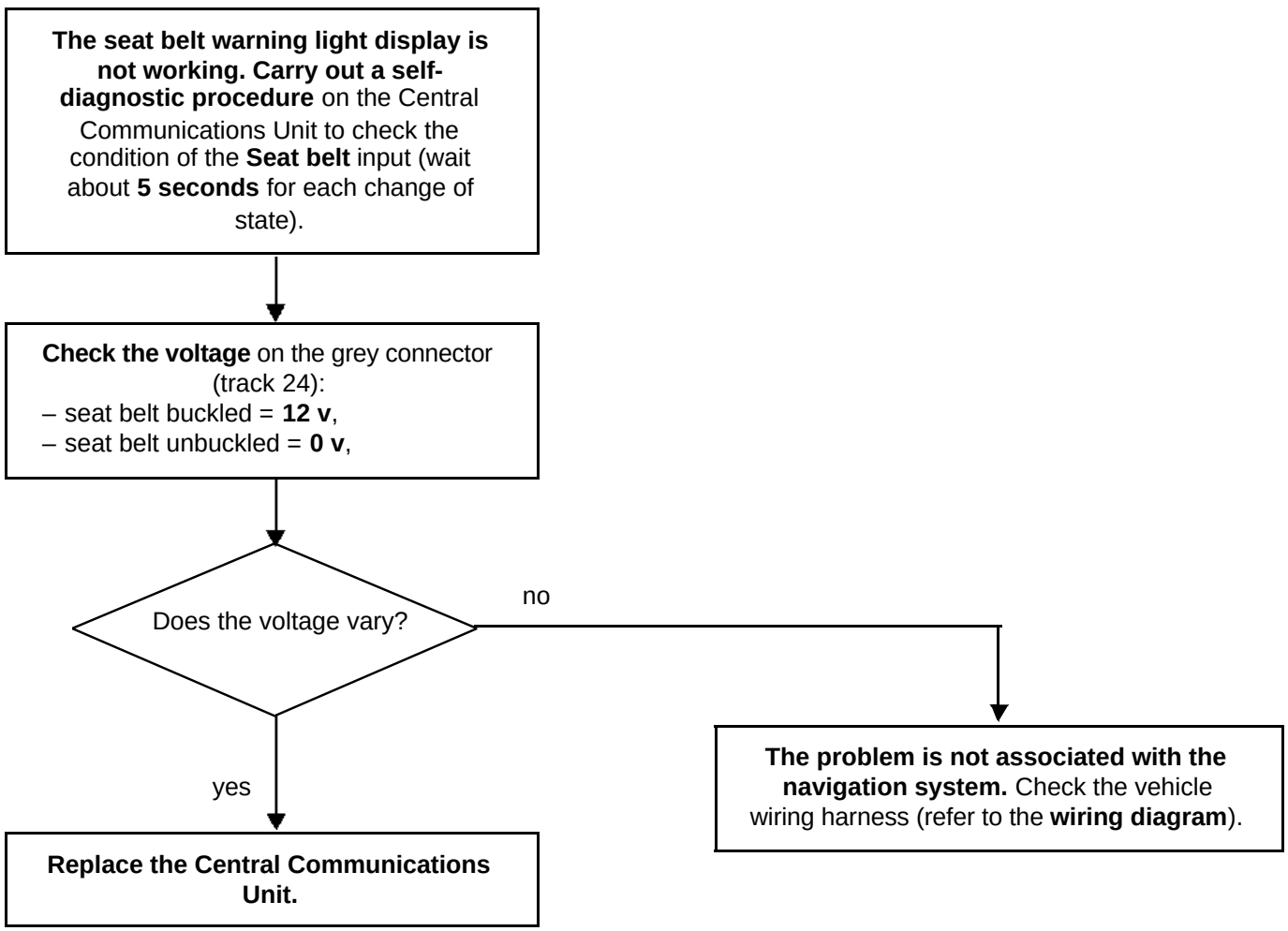

GETtheMANUALS.org

No radio display on the Carminat screen or the screen stays fixed (entry level radio)

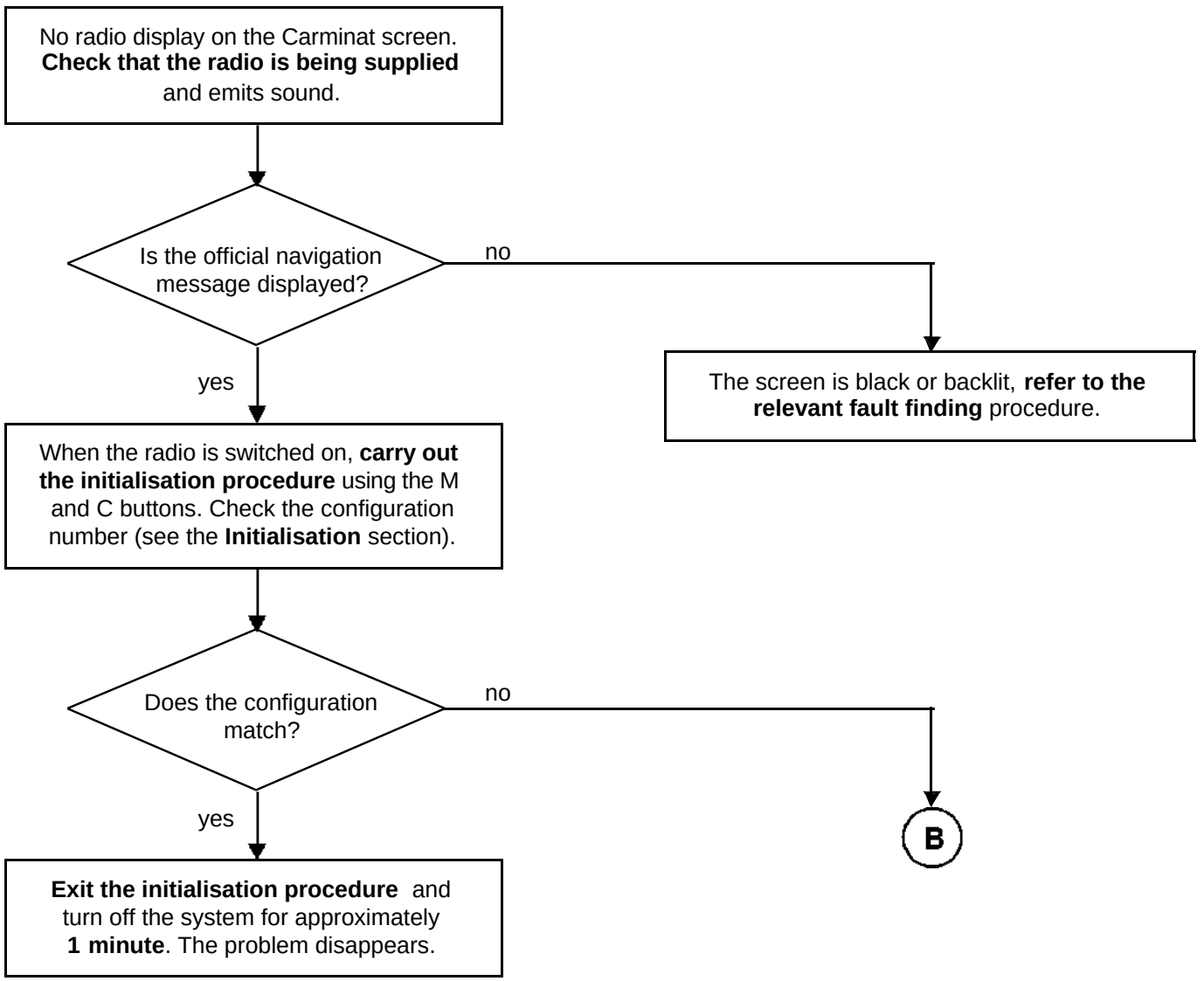

GETtheMANUALS.org

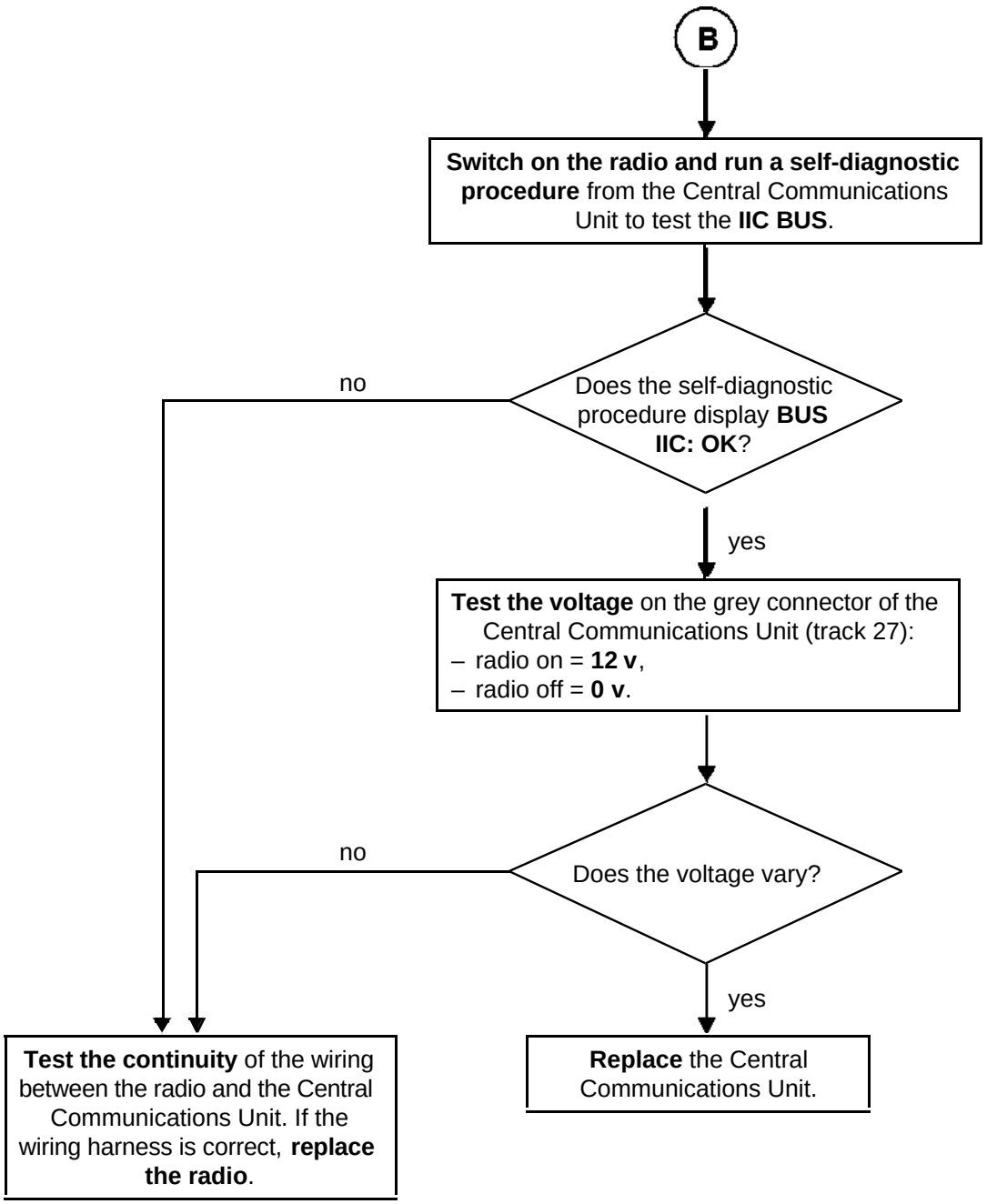

GETtheMANUALS.org

No radio display on the Carminat screen or the screen stays fixed (top of the range radio)

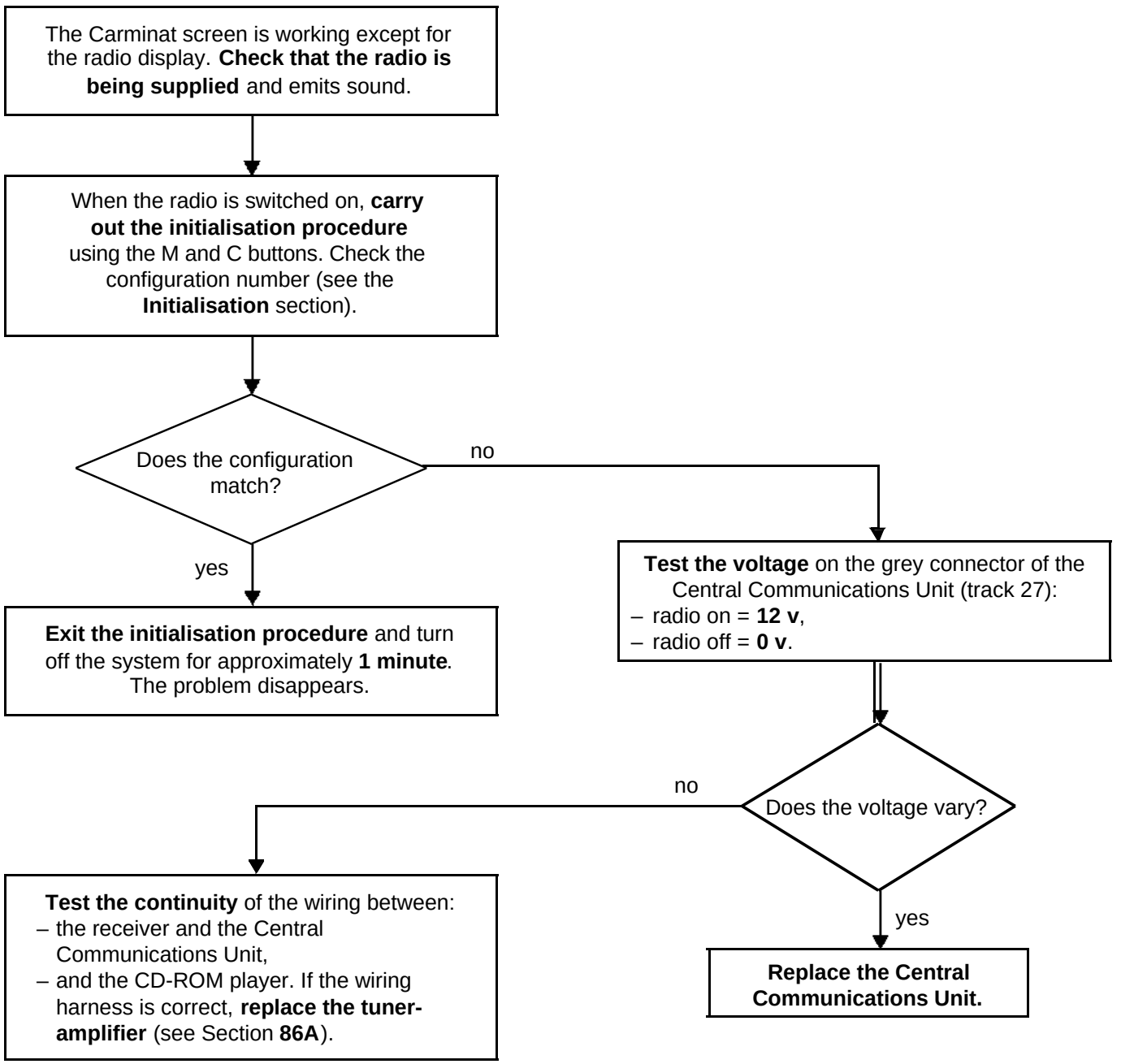

GETtheMANUALS.org

No voice messages

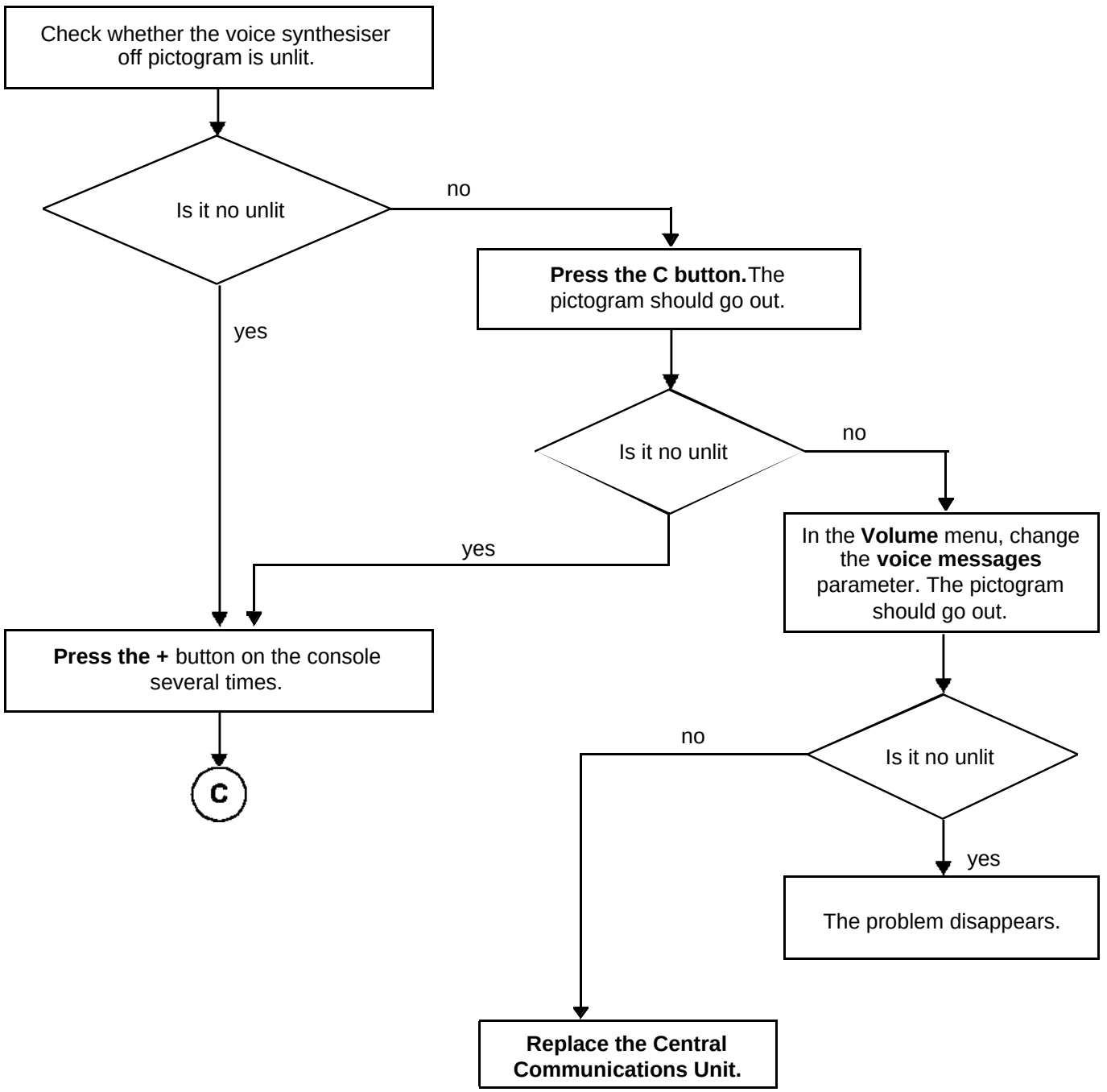

GETtheMANUALS.org

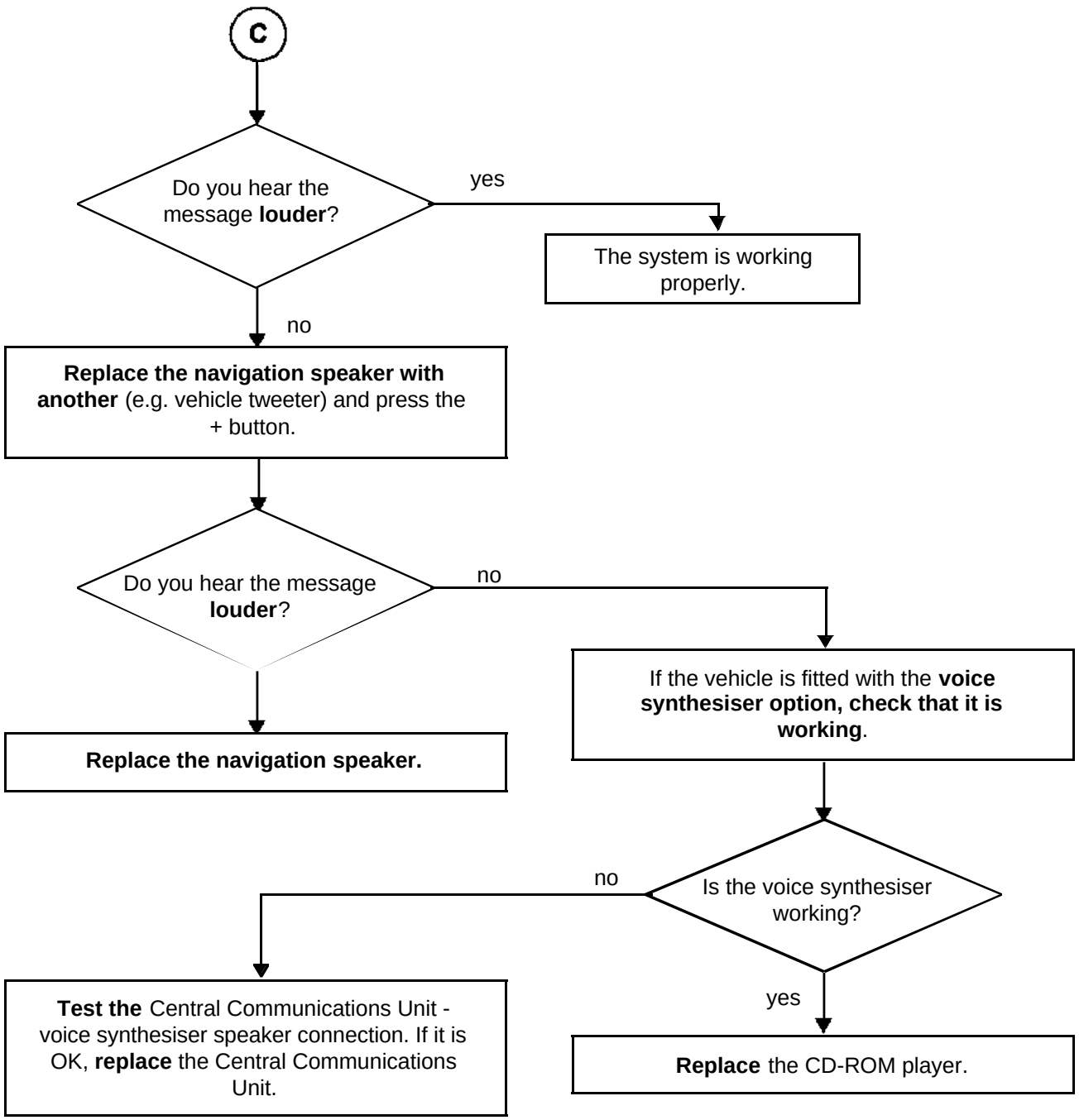

GETtheMANUALS.org

No traffic information message on the screen

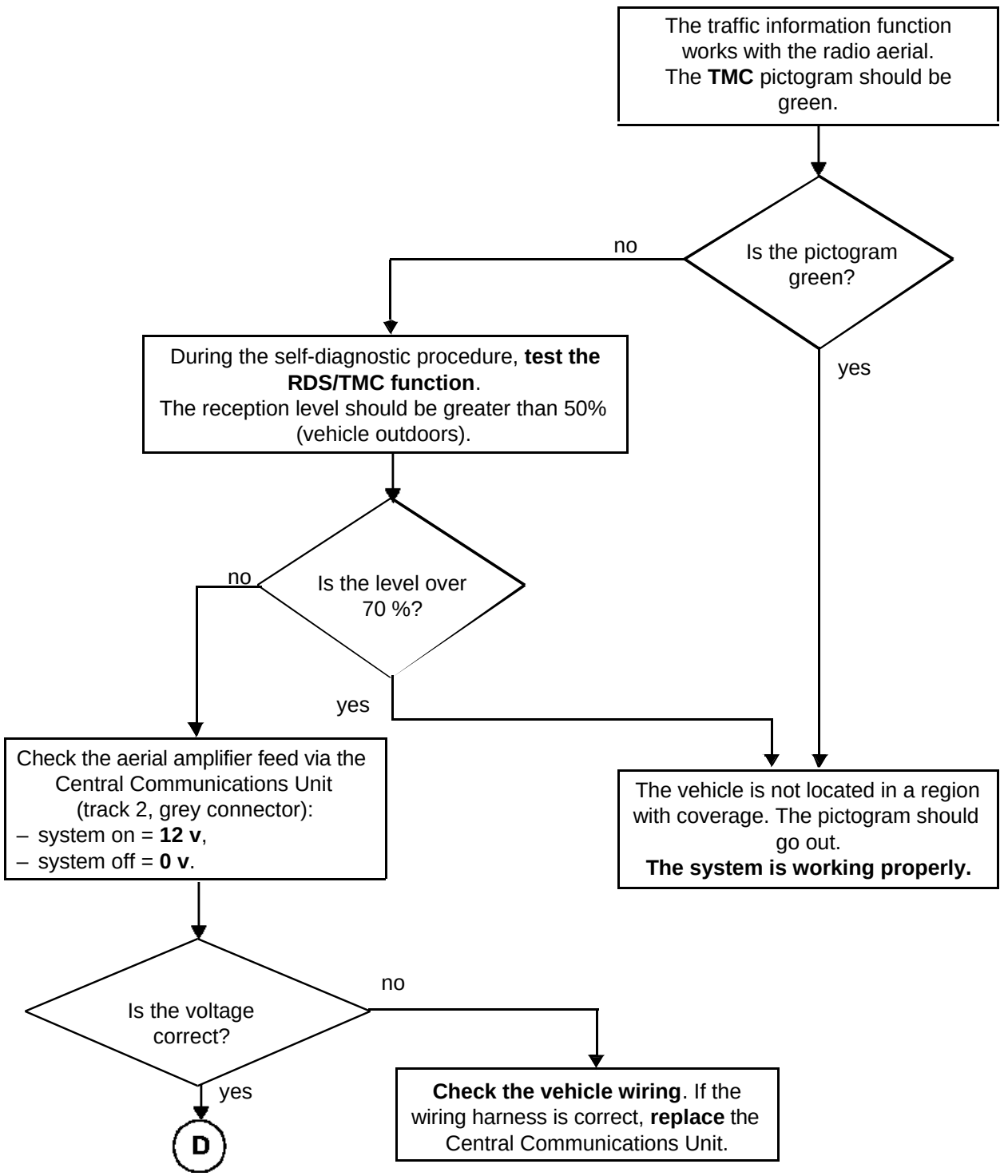

GETtheMANUALS.org

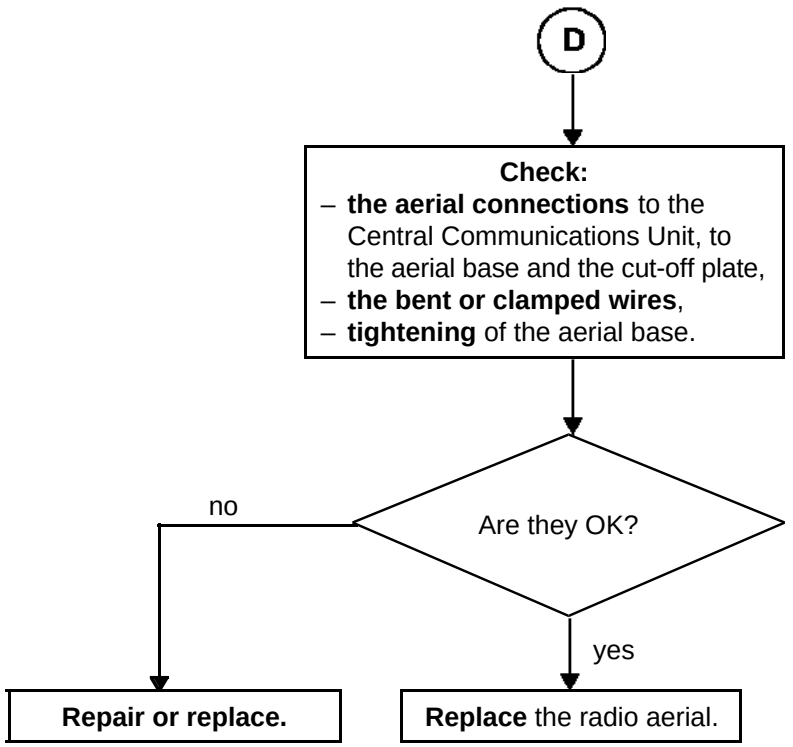

GETtheMANUALS.org

Poor GPS reception

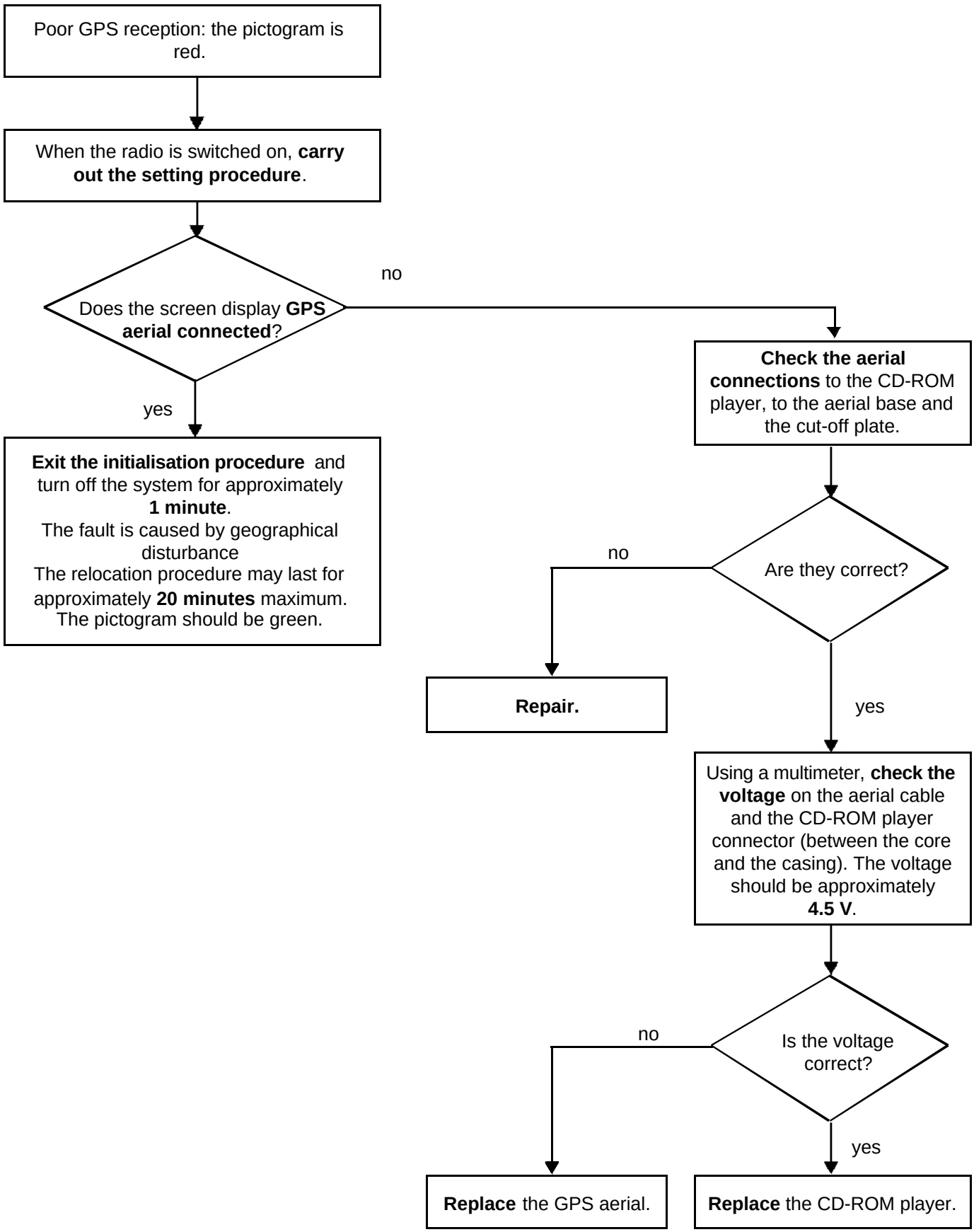

GETtheMANUALS.org

These vehicles are fitted with three types of equipment:

- the **Cruise control** option allows the driver to maintain a speed he has selected. This function can be switched off at any moment by depressing the brake pedal or the clutch pedal, or by using one of the system buttons,
- the **Speed limiter** allows the driver to set a speed limit. The accelerator pedal has no effect above the set speed. The speed limit selected can be exceeded at any time by depressing the accelerator pedal beyond its hard point,
- **Adaptive cruise control** can maintain a speed selected by the driver while also maintaining a consistent following distance behind the vehicle in front. This function can be switched off at any moment by depressing the brake pedal or by using one of the system buttons.

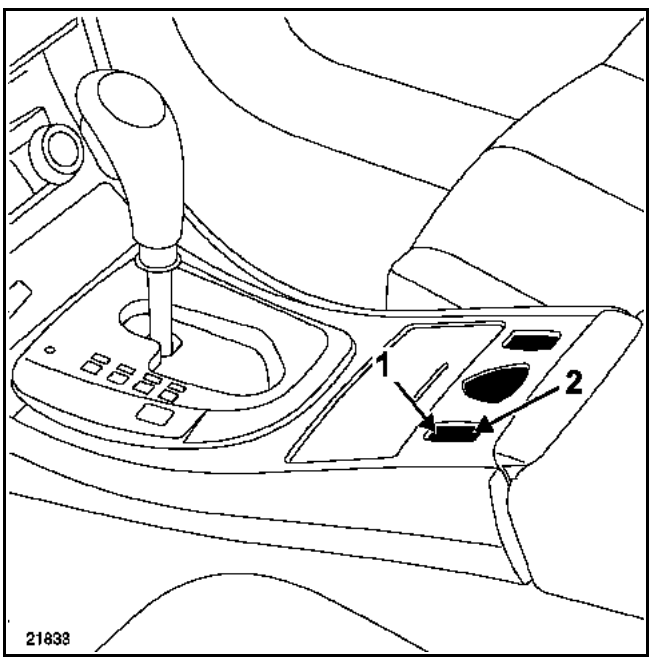

1 Cruise control or adaptive cruise control warning (depending on the version),
2 Speed limiter

The **Cruise control** and **Speed limiter** functions are controlled by the injection computer. The injection computer exchanges information with the ABS computer, the automatic transmission computer and the instrument panel. It applies the set values by acting on the motorised throttle valve.

NOTES:

- a flashing of the cruising speed on the instrument panel informs the driver that the speed cannot be maintained (e.g. when going downhill).
- a vehicle cannot be fitted with the **Cruise control** and **Adaptive cruise control** functions.
- when replacing the injection computer, you must:
  - demonstrate that the **Cruise control and speed limiter** functions are present. To do this, start the functions using the dashboard switch,
  - configure it with or without **adaptive cruise control**.

GETtheMANUALS.org

List of components

1 Cruise control/speed limiter off switch
2 Steering wheel switch
3 Accelerator pedal
4 Instrument panel
5 Clutch pedal switch (depending on version)
6 Brake pedal switch
7 Automatic transmission computer (depending on version)
8 ABS computer
9 Injection computer

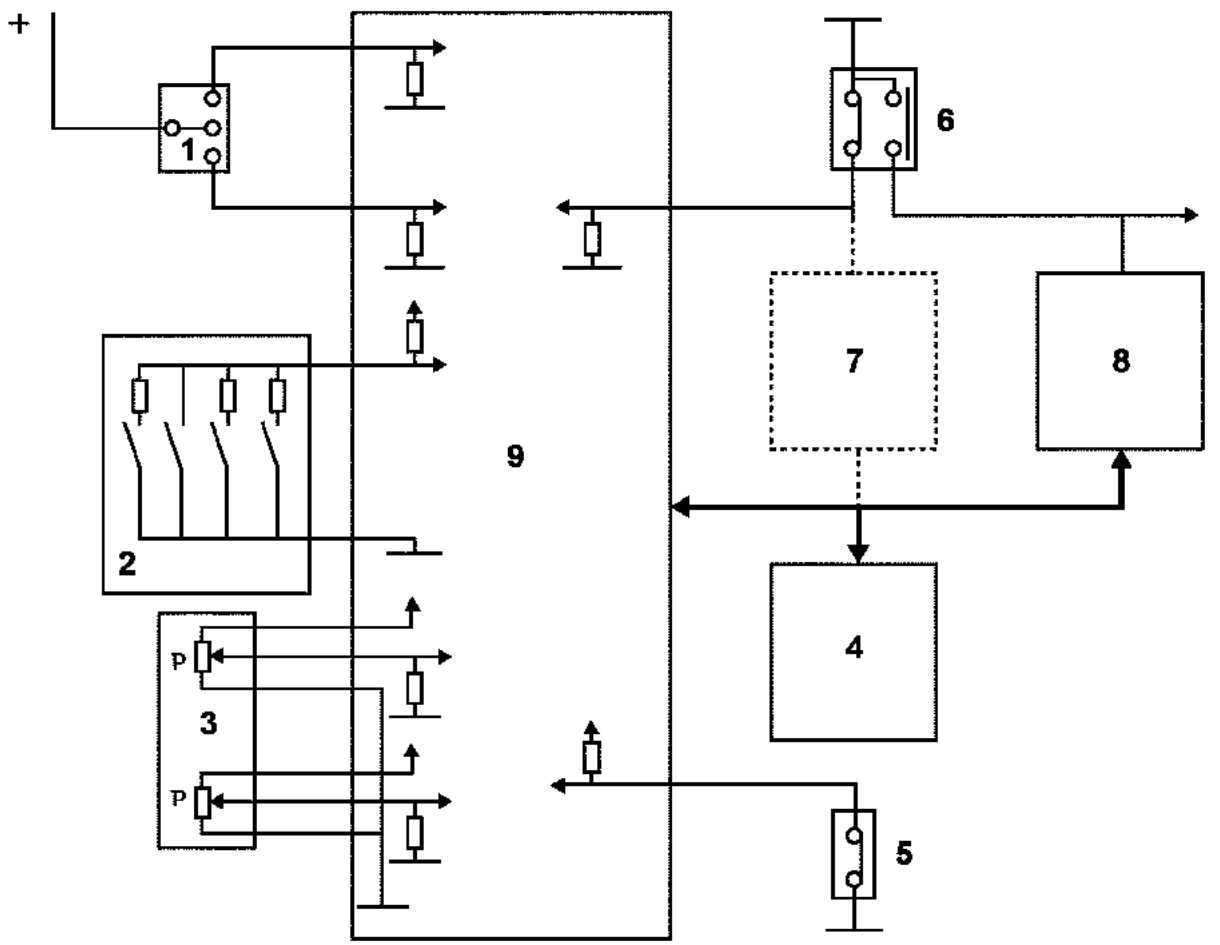

19308

GETtheMANUALS.org

DESCRIPTION

The ABS computer sends:
– the **vehicle speed** signal,
– the **depressed brake pedal** signal.

The Automatic Transmission computer sends the **gear engaged** signal.

The instrument panel:
- displays the reference value (cruise control or speed limiter) (see section **83A instrument panel**),
- lights up a two colour warning light:
  – Cruise control = green
  – Speed limiter = amber

Each time these functions are switched on, the on-board computer display switches to the relevant page.

NOTE:
The cruise control / speed limiter functions do not have a fault warning light.

The controls:
- a three position switch (off/cruise control/speed limiter)
- steering wheel switches that can be used to adjust the cruising speed, cancel the cruise control or speed limiter functions, or recall the stored speed,
- accelerator pedal switches that are used to control the injection and the brake lights,
- a clutch switch (according to model) that is used only for the cruise control function.

NOTES:
– the vehicle has two clutch sensors: one for starting the engine (end of travel) and one for the cruise control function (start of travel),
– the accelerator pedal must incorporate a hard point at the end of its travel.

The injection computer:
- receives signals from the accelerator pedal,
- receives a signal from the brake switch ,
- receives a signal from the clutch engagement switch (according to model),
- receives signals from the three-position switch,
- receives signals from the steering wheel switches,
- receives signals from the ABS computers,
- receives signals from the automatic transmission computer.
- sends signals to the instrument panel
- controls the motorised throttle valve or the injection output.

GETtheMANUALS.org

THREE POSITION SWITCHES

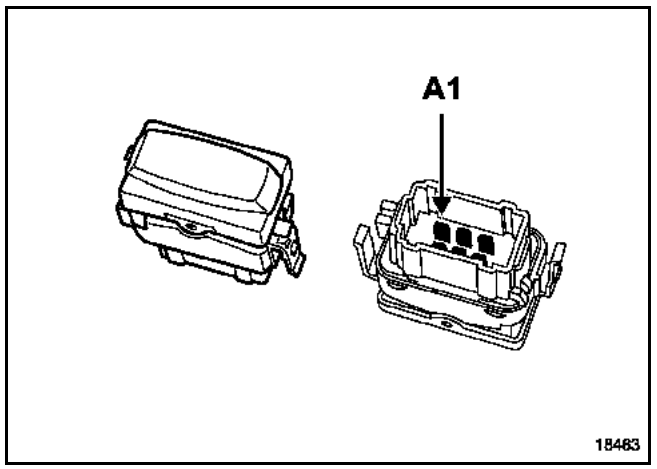

Track	Description
A1	+ Side light
A2	+ After ignition (braking circuit)
A3	Cruise control on/off switch
B1	Speed limiter On/Off switch
B2	Earth
B3	Not used

STEERING WHEEL SWITCHES

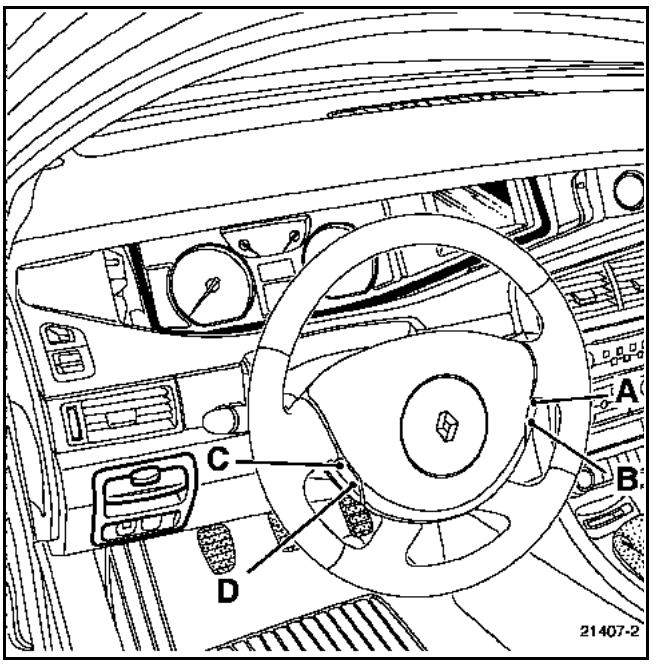

A: Resume button = approximately **900 Ω**
B: O button: approximately **0 Ω**
C: + button = approximately **300 Ω**
D: button "**-**" = approximately **100 Ω**

NOTE:
To remove the rotary switch, refer to Section **84A Signals-control**.

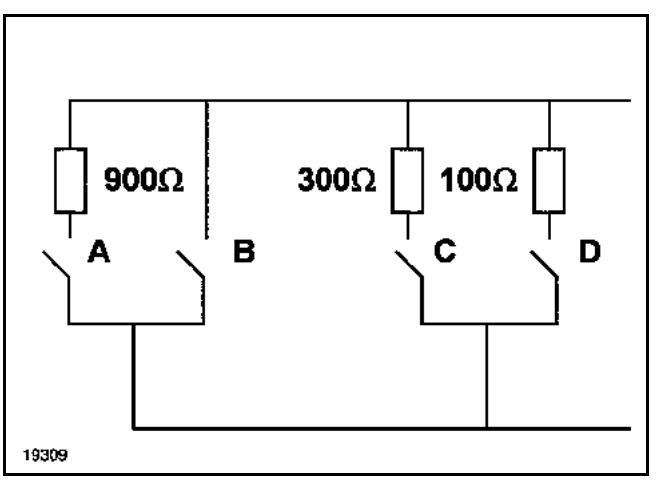

GETtheMANUALS.org

ACCELERATOR PEDAL

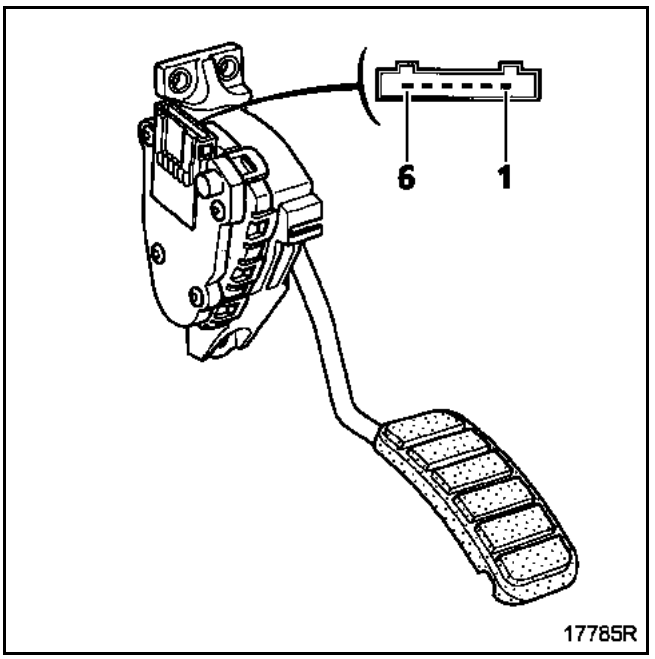

Track	Description
1	Potentiometer earth 2
2	Potentiometer earth 1
3	Potentiometer pedal signal 1
4	Potentiometer supply 1
5	Potentiometer supply 2
6	Potentiometer pedal signal 2

Track 1 resistance = **1200 ± 480 Ω**
Track 2 resistance = **1700 ± 680 Ω**

IMPORTANT:
In order to operate, the vehicle must be fitted with an accelerator pedal incorporating a hard point at the end of travel.

BRAKE LIGHT SWITCH (DOUBLE)

The **cruise control** function uses the open contact (together with the lights), while the ABS computer uses the closed sensor.

The two signals are compared by the injection computer.

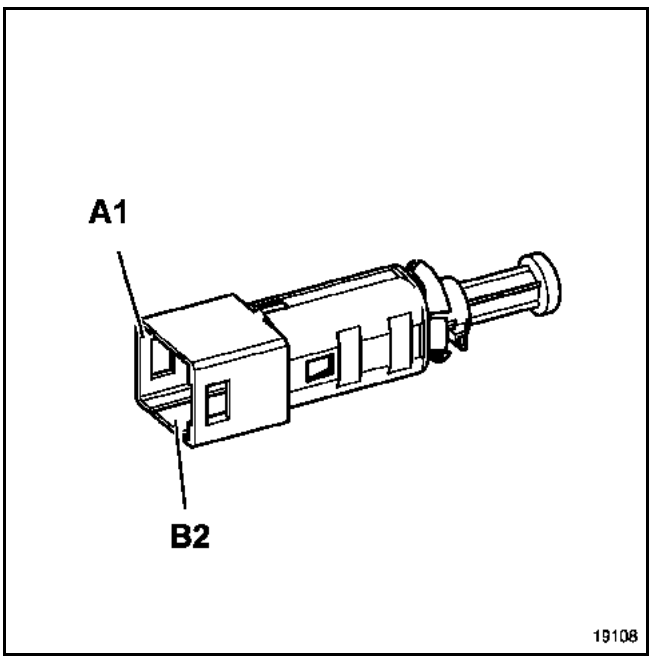

Track	Description
A1	Close contact
A2	Open contact
B1	Open contact
B2	Close contact

When the switch is fitted, pull on the pushrod to take up the clearance.

GETtheMANUALS.org

CLUTCH SWITCH

The clutch pedal has two switches and a potentiometer:

- start of travel switch (1) that is used only for the **cruise control function** (grey connector),
- end of travel switch (2) for the **Keyless vehicle** function (blue connector),
- a potentiometer (3) for the automatic parking brake.

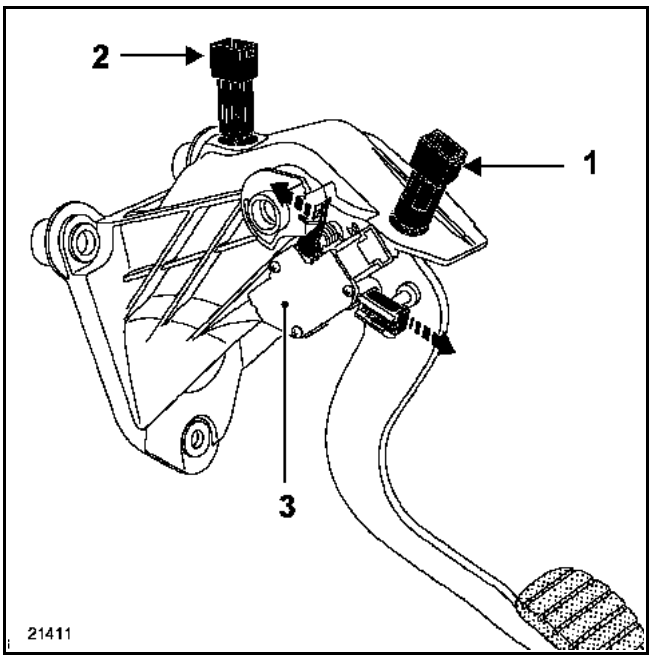

When the switch is fitted, pull on the pushrod to take up the clearance.

GETtheMANUALS.org

Activation conditions:
– switch in **Cruise control** position (green indicator light),
– speed must be between **18 mph (30 kph)** minimum and **120 mph (200 kph)** maximum (for information purposes),
– press on the **+** or **R** buttons.

Deactivation conditions:
– full step on the accelerator,
– brake or clutch pedal pressed,
– press **O**,
– switch to **Off**,
– electronic stability program system operation,
– injection computer operation (fault or overspeed),
– Gearbox in "**neutral**", "**Parking in neutral (manual)**".

NOTE:
A flashing of the cruising speed on the instrument panel informs the driver that the cruising speed cannot be maintained.

GETtheMANUALS.org

Activation conditions:
– switch in **Speed limiter** position (amber indicator light),
– speed must be between **18 mph (30 kph)** minimum and **120 mph (200 kph)** maximum (for information purposes),
– press **+ -** or **R**.

Deactivation conditions:
– accelerator must be depressed quickly (beyond hard point)
– switch to **Off**,
– press the **O** button,
– injection computer operation (fault or overspeed),
– when the cruising speed warning light is flashing, it informs the driver that the cruising speed cannot be maintained.

GETtheMANUALS.org

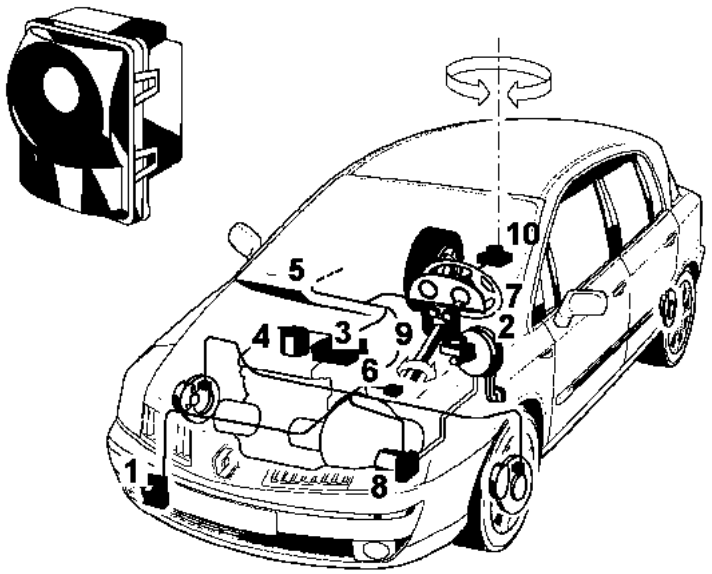

22227

1 Radar or range finder
2 Adjustment buttons on the steering wheel
3 Injection computer
4 Motorised throttle valve
5 Multiplex connection
6 Automatic transmission
7 Instrument panel
8 ABS computer
9 Steering wheel angle sensor
10 Lateral acceleration and yaw sensor

GETtheMANUALS.org

SYSTEM DESCRIPTION

On certain vehicles the **adaptive cruise control** replaces **Cruise control**.

The system uses a range finder (radar) (A) designed to detect moving vehicles on the vehicle trajectory.

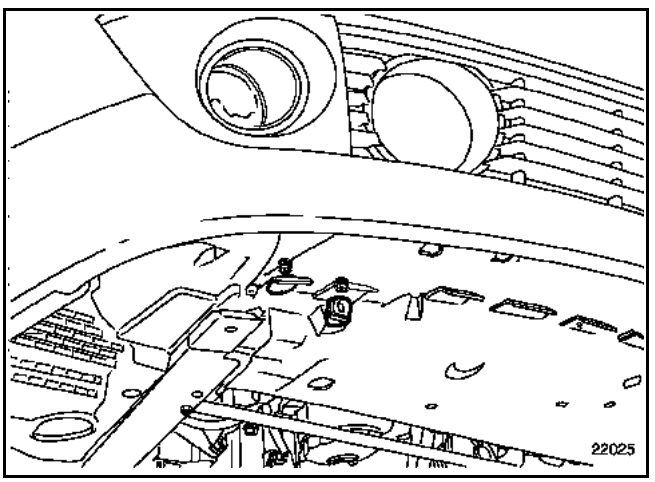

NOTE:
The system can only detect vehicles moving at a speed above approximately **9 mph (15 km/h)**.

The system is activated by positioning the three position switch to **adaptive cruise control** (1).

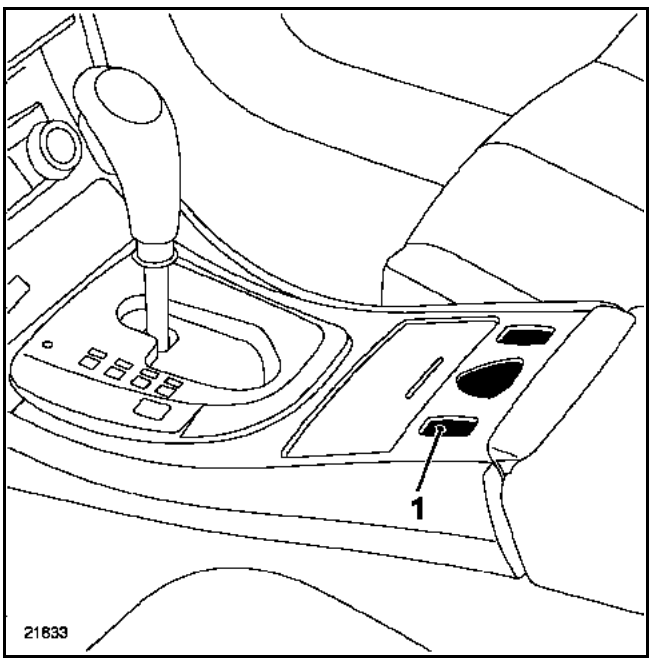

REMINDER:
The **Adaptive cruise control** function replaces the **Cruise control** function.

GETtheMANUALS.org

The cruising speed can be altered using the + and - buttons on the steering wheel (3).

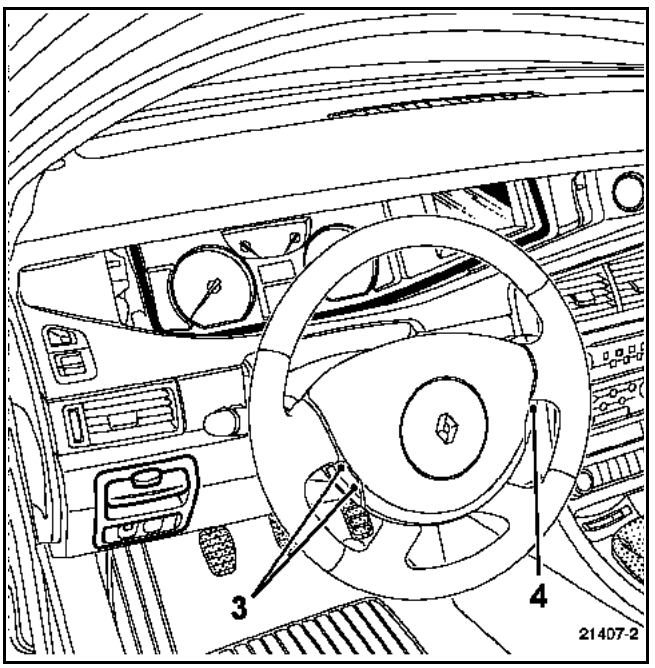

The following distance, denoted by horizontal bars (2) on the instrument panel display, can be altered by pressing button (4):
– one bar on the display for a short following distance
– two bars on the display for an average distance,
– three bars on the display for a long following distance

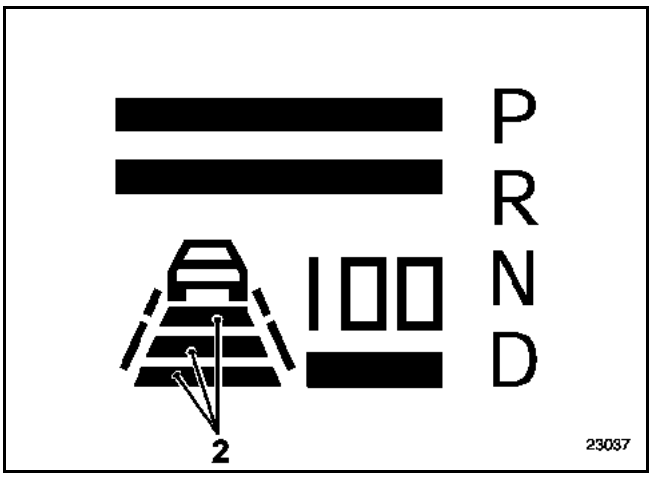

REMINDER:
The following distance is not fixed and cannot be expressed in metres. It depends how fast the vehicles are moving.

This function can be switched off at any moment by depressing the brake pedal, pressing the 0 button on the steering wheel, or by using the three position switch.

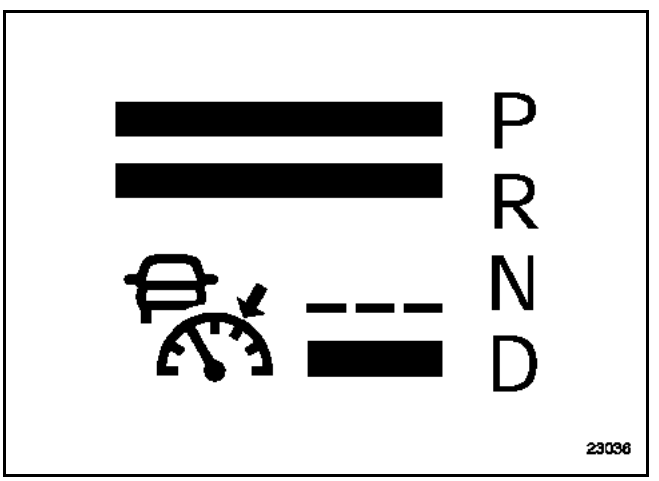

GETtheMANUALS.org

When operating normally, the vehicle adapts itself to the speed of the moving vehicle in front:

- If the vehicle in front accelerates, the vehicle accelerates without the driver's intervention until the cruising speed is displayed and memorised by the system.
- If the vehicle in front slows down or another cuts in, the vehicle slows down with no intervention by the driver until it has stabilized at the set following distance.
- In the event of sharp deceleration, the vehicle may temporarily enter this following distance.
- The vehicle brakes without driver intervention, but in the case of sharp deceleration, the system warns the driver with a bleep and a message on the display that it is essential to resume control of the system.

IMPORTANT: this is not an anticollision system. It only detects moving vehicles (about **9 mph (15 km/h)**) and cannot brake more sharply than **3 m per s^2** (it cannot activate the emergency brake assist).
The monitored distance is not fixed. It varies according to vehicle speed. It is a monitored period of time.

Overtaking assistance programming
When a speed is stored in the system but the vehicle in front is causing the speed to drop, the indicator on the driver's side is activated to request vehicle acceleration. This enables the driver to overtake.

Lights and wiper programming
When the fast wiping speed or side lights are on (either in manual or automatic mode) the following distance is automatically increased by about 25% by the system without altering the display on the instrument panel.

Activation conditions:
– switch on **adaptive cruise control warning**.
– speed must be between **30 mph (50 km/h)** minimum and **110 mph (180 km/h)** maximum (for information purposes),
– green cruise control light must lit,
– press the **-**, **+** or **summarise** button (if a cruising speed is already stored).

Deactivation conditions:
– depress the accelerator pedal (temporary output),
– depress the brake pedal,
– press to **0**,
– switch to **Off**,
– electronic stability program system operation,
– speed less than approximately **18 mph (30 km/h)**,
– voluntary deactivation of the electronic stability program system.

NOTES:
- The period of time monitored can be altered using the **Summarise** button on the steering wheel.
- If the electronic stability program, injection, or ABS systems are faulty, the **adaptive cruise control** system does not work or is deactivated.
- The components (steering wheel buttons, pedal switches etc.) are the same for the **Speed limiter** system.
- The green warning light only comes on when the engine is running.

GETtheMANUALS.org

REMOVING THE RANGE FINDER (RADAR)

IMPORTANT:
Any operation that adjusts the front and rear axle assemblies, the range finder or a body element (cross member) in the range finder area requires the system alignment to be adjusted.

The front bumper must be removed to remove the range finder (refer to the **bodywork** section).

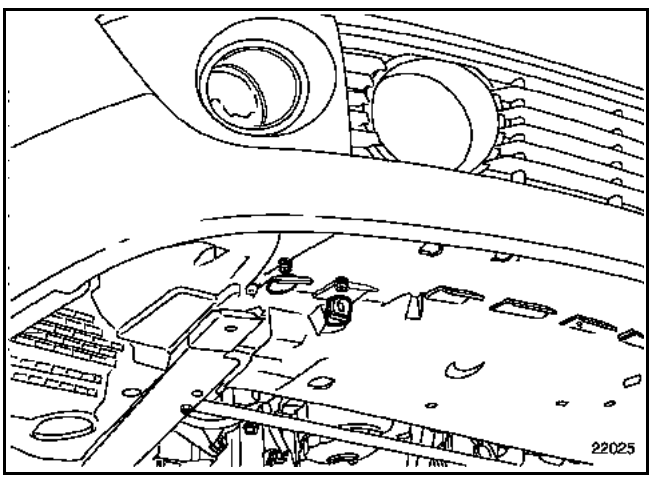

Disconnect the connector.

Remove the range finder + mounting assembly (1).

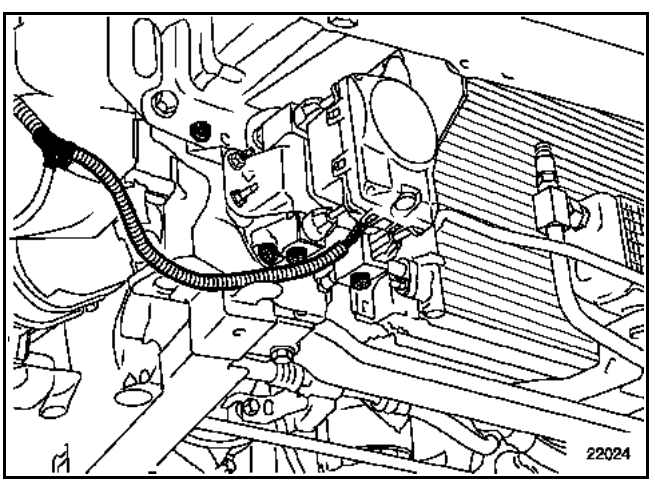

NOTE:
When sold as a spare part, the range finder is supplied pre-adjusted with its mounting.

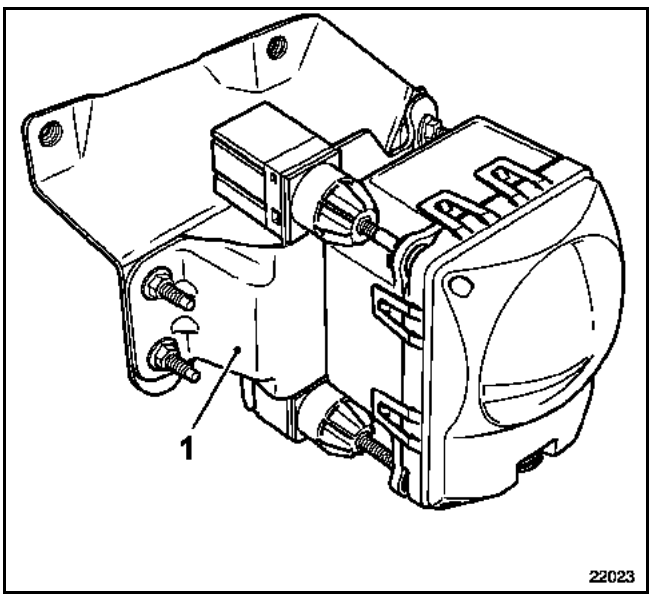

REFITTING

Take off the plastic protective film from the radar.

Visually check the condition of the front cross member, the range finder metal mounting and the bumper.

Take care of the headlight washer supply pipes.

Carry out the necessary configurations with the fault finding tool in the "**Proximity control**" menu. Select **Left-hand drive** or **Right-hand drive**.

It is essential to check that the system is aligned.

GETtheMANUALS.org

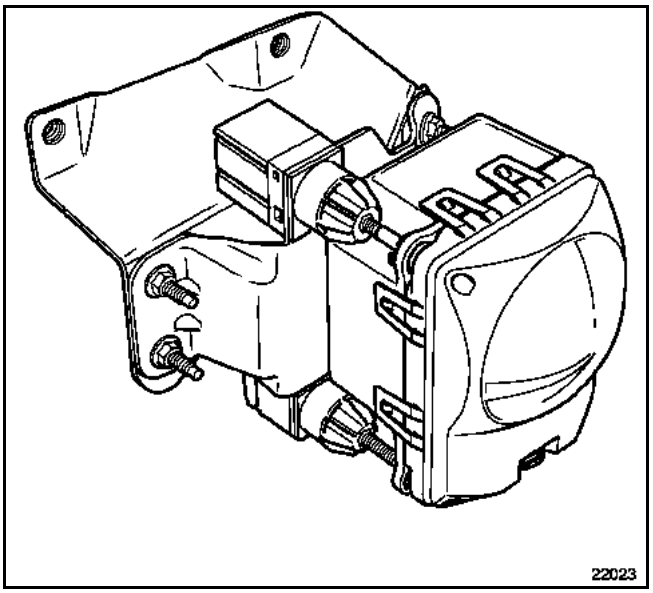

Track	Description
1	Earth
2	Multiplex connection
3	Not used
4	Multiplex connection
5	Not used
6	Not used
7	Not used
8	Not used
9	Not used
10	Not used
11	Diagnostic line
12	+ after ignition feed

GETtheMANUALS.org

ADJUSTING THE RANGE FINDER

To adjust the system, it is essential to remove:
- special **Bem Muller** equipment made up of an aluminium bar with mounting, a reflective plate and magnetic read head brackets and a spirit level,

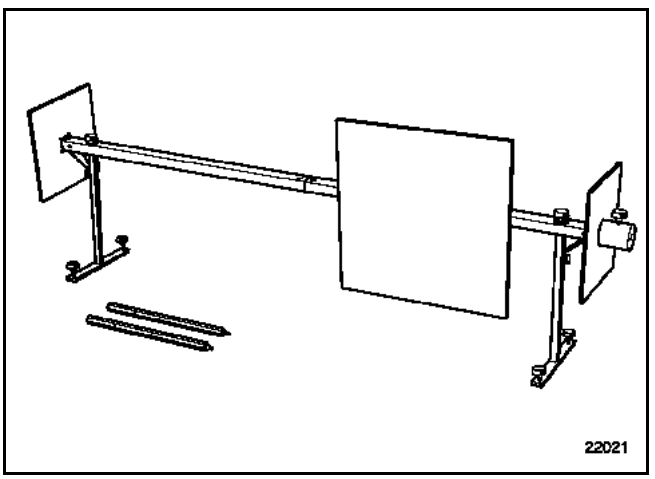

- tester for axle assembly angles
- a fault finding tool to communicate with the range finder (radar) and the computer.

IMPORTANT:
Any operation that adjusts the front and rear axle assemblies, the range finder or a body element (cross member) in the range finder area requires the radar alignment to be adjusted.

PREPARING THE VEHICLE

The vehicle should be on a flat level surface.

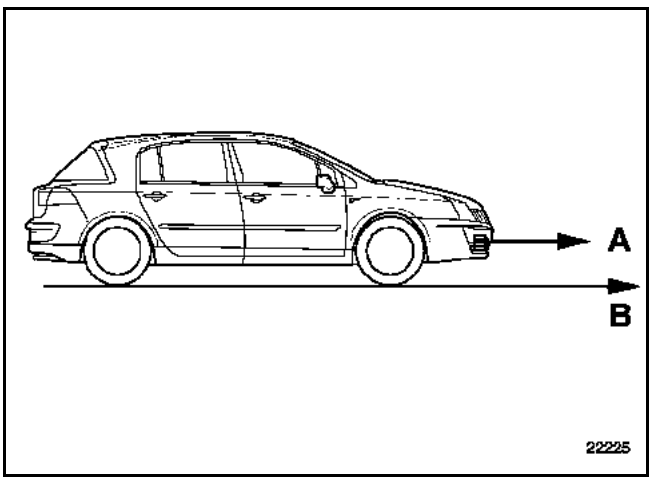

A Radar axis
B Base plane

The area should be cleared sufficiently to place the mirror **120 cm** away from the vehicle and leave **100 cm** for handling the instruments.

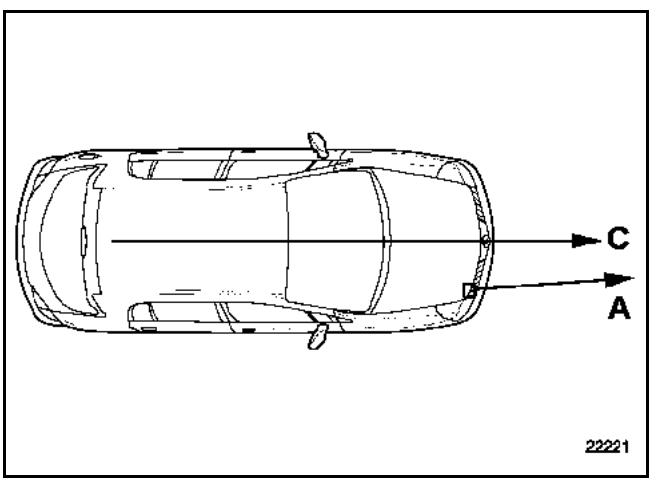

C Thrust axis
A Radar axis

REMINDER:
Before testing or adjusting the alignment of the range finder, check the tyre pressures, body height and the rear axle geometry settings.

GETtheMANUALS.org

FITTING THE EQUIPMENT

IMPORTANT:
Any operation that adjusts the front and rear axle assemblies, the range finder or a component requires the system alignment to be adjusted.

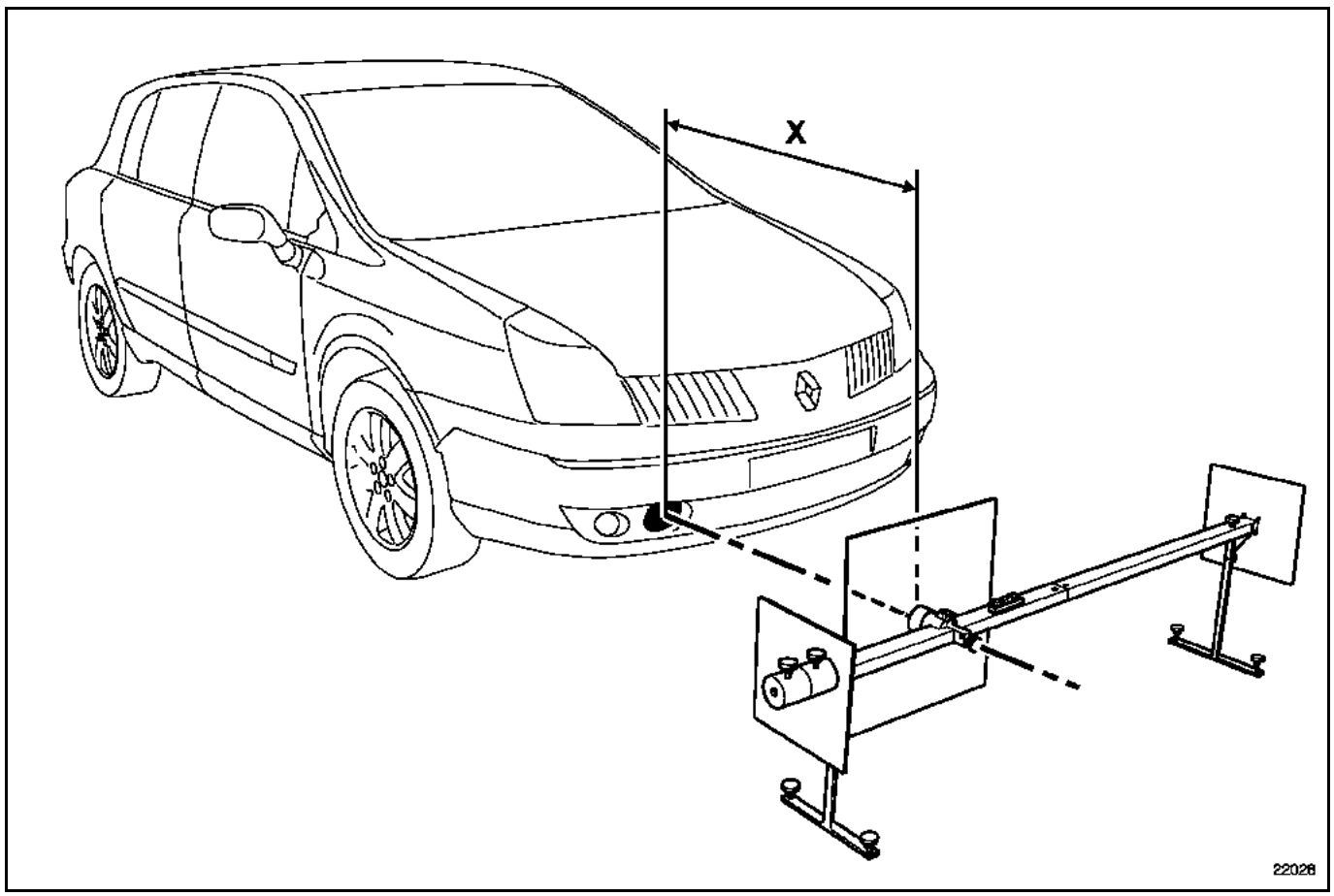

IMPORTANT:
Unscrew the electric handbrake from the vehicle.

1 Place the vehicle in the axle assembly checking area

2 Put the aluminium bar on its mounting **120 cm** (X) away from the front of the vehicle and check its level.

GETtheMANUALS.org

3 Position the front (A) and rear (B) magnetic heads of the checking tool.

4 Check the angles fully (clearing, parallelism front and rear etc.).

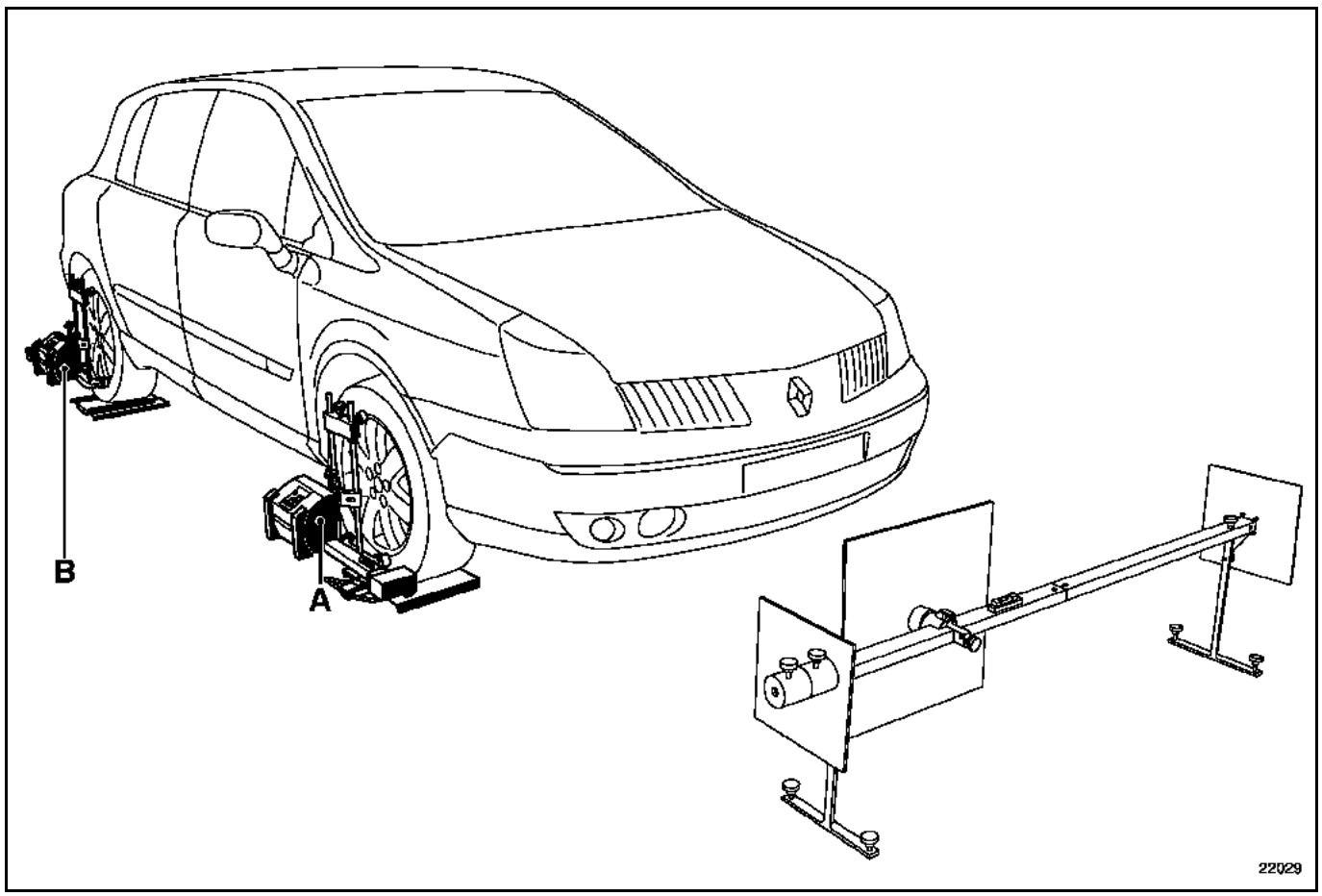

REMINDER:
Remember to check the tyre pressures, body heights, to clean the wheel heads and to compress the suspension.

GETtheMANUALS.org

5 Without removing the rear magnetic heads (B), put the axle checking tool magnetic heads (A) at the ends of the bar.

6 Expose the front magnetic heads by turning the brackets (D) without leaving the axle assemblies angles menu.

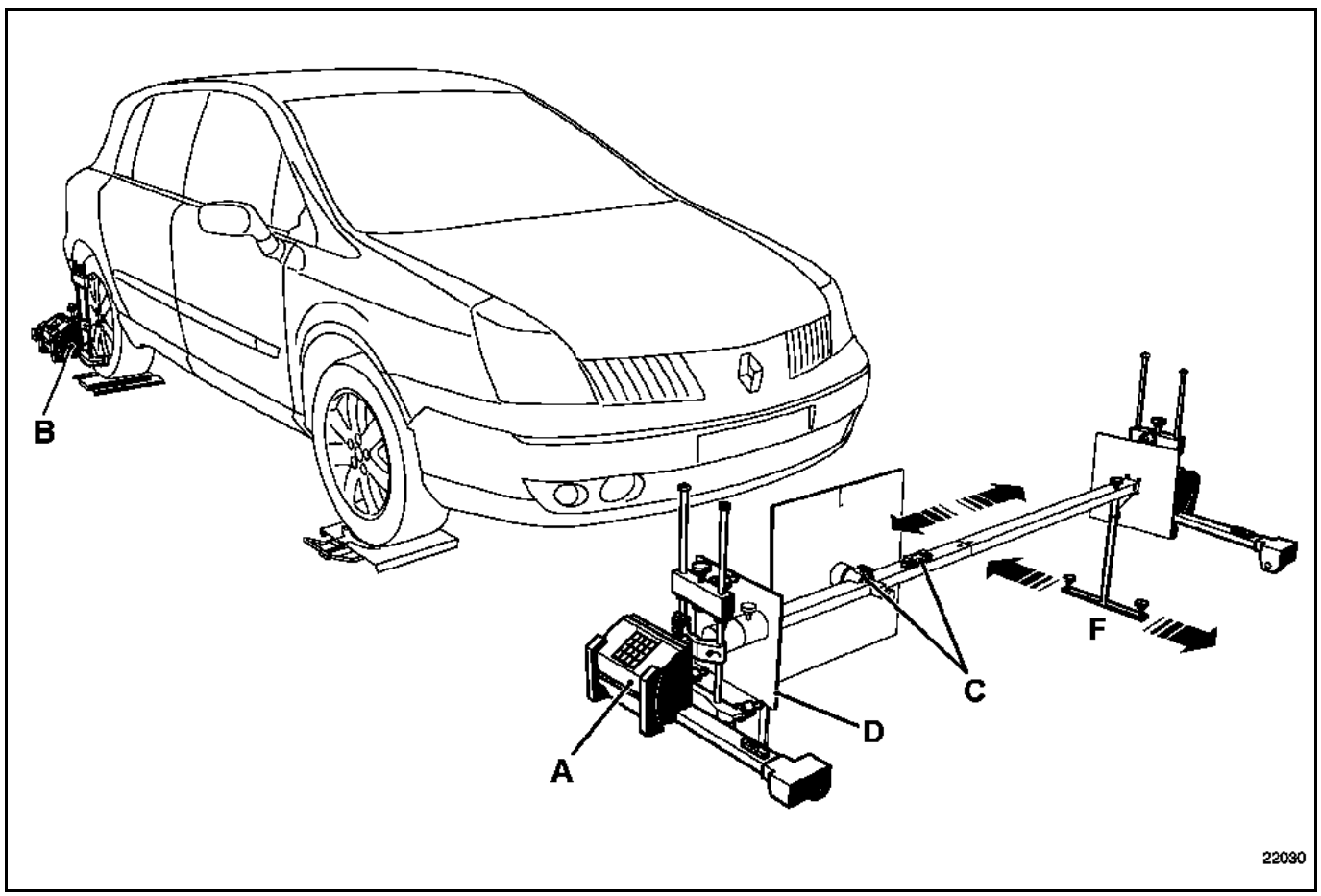

7 Display the axle assemblies angles screen or the menu for the adaptive cruise control system (according to the axle adjustment equipment).

8 Adjust the bar using the spirit level (C) by moving the adjustment wheels on the base of the pillars (not supplied).

9 Turn and gently move the bar (E) or at (F) in order to read on the checking screen:
- a gap * between the front and rear axles close to 0,
- equal front parallelism values.

* the gap between the front and rear axles may, depending on the equipment be called asymmetric between axle assemblies, front and rear parallelism gaps etc.

10 Test spirit levels (C) (not supplied).

IMPORTANT:
It is very important to position the reflective plate facing the radar.

GETtheMANUALS.org

TESTING AND ADJUSTING THE ALIGNMENT

WARNING: the battery voltage should never be lower than **12 v** during any operation.

1 Establish dialogue using the fault finding tool to ensure that there is no fault, then enter the "**Proximity control**" menu.

2 In the **Command** menu confirm the **Special command** line.

3 Then in the **Special command** menu, confirm the **Radar alignment with geometric instrument** (**SC001**) line.

4 Position the reflective plate pointing **upwards** and facing the radar.
Using the screen (axle assemblies tool), check that the bar is correctly positioned, then confirm to access the next step and wait until the indicator (green light) goes red (20 seconds).

NOTE: when the indicator on the fault finding apparatus goes red, it means that the radar is taking measurements. It is very important not to move the reflective plate, as there is a risk of false readings.

5 Turn it a quarter of a turn to the right (clockwise so that it is opposite the mirror in the vehicle's forward axis). The label on the rear of the mirror is on the **left** when looking at the back of the mirror. Check the bar position again, then confirm to access the next step or wait until the light goes red.

6 Turn it a quarter of a turn to the right (clockwise so that it is opposite the mirror in the vehicle's forward axis). The label on the rear of the mirror is at the **bottom** Check the bar position, then confirm to access the next step or wait until the light goes red.

7 Turn it a quarter of a turn to the right (clockwise so that it is opposite the mirror in the vehicle's forward axis). The label behind the mirror is on the **right** when looking at the back of the mirror. Check the bar position, then confirm to access the next step or wait until the light goes red.

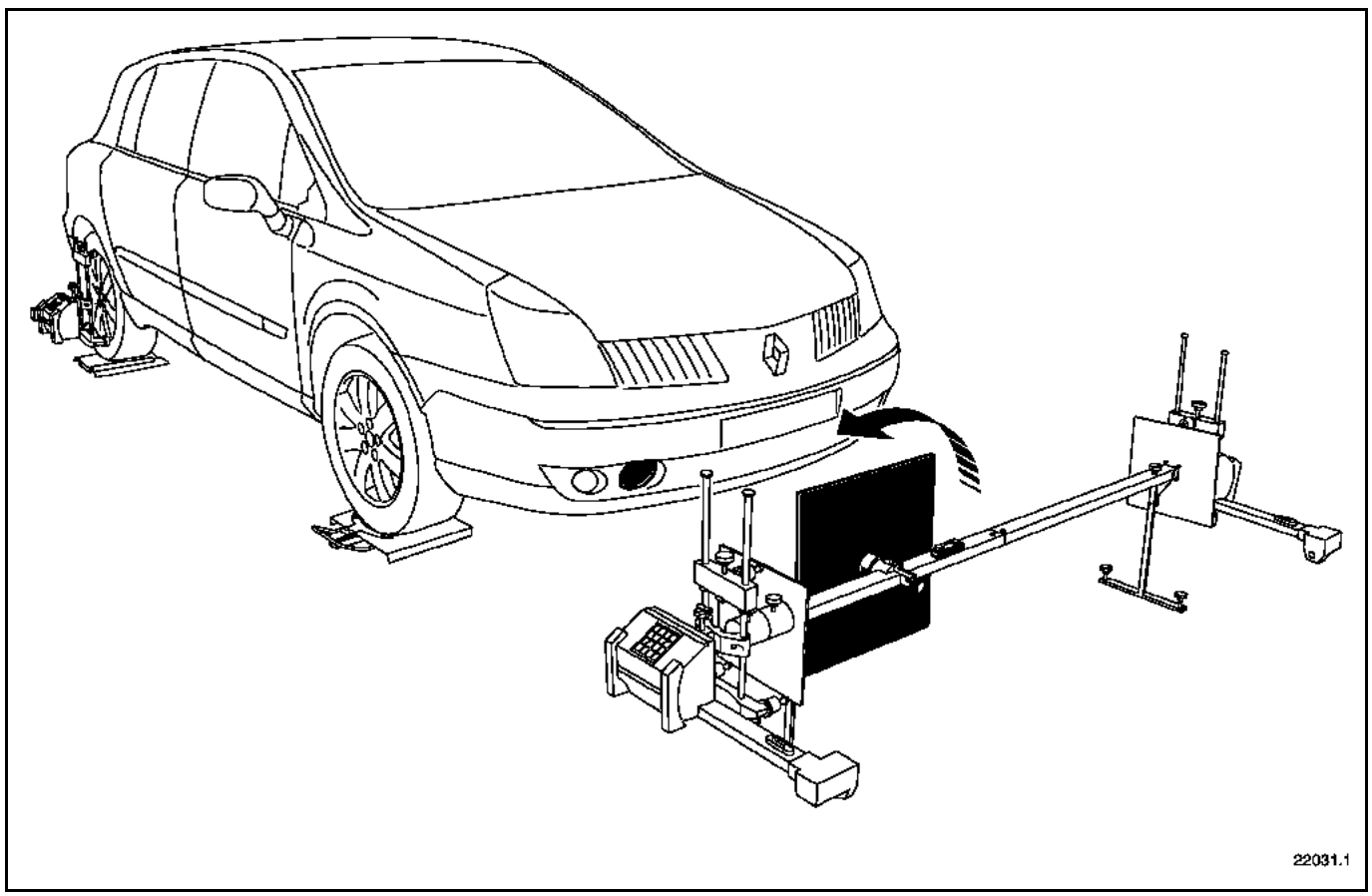

GETtheMANUALS.org

The fault finding tool then displays the operations for aligning the range finder:

- Screw or unscrew the vertical adjustment bolt (H).
- Screw or unscrew the horizontal adjusting screw (I).

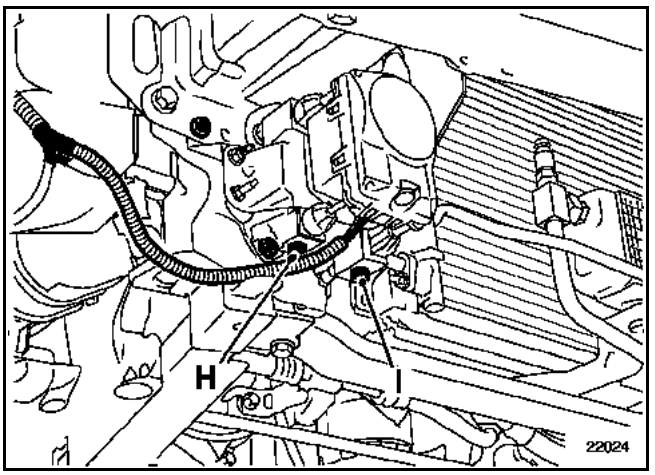

Example:

Adjustment Adjustment	Screw	
Adjustment value	1	Turns
Final adjustment value	30	Minutes

Adjustment Adjustment	End	
Adjustment value	0	Turns
Final adjustment value	0	Minutes

REMINDER: 1 Turn = 60 minutes
1/2 Turn = 30 minutes
1/4 Turn = 15 minutes

IMPORTANT:
If the fault finding tool displays "procedure interrupted", check the distance between the vehicle and the reflective plate (120 cm) and the alignment of this plate in relation to the radar.

NOTE:
The adjustment should be made with the bumper in place.

After the adjustments have been made, confirm.

The tool displays **the adjustment is not complete, do you still wish to exit**?

Enter **NO**, in order to check again and see if the prior adjustments were correct.

If it does not read **horizontal adjustment complete and vertical adjustment complete** in the columns, repeat the operations as many times as necessary.

After an adjustment has been made or a steering wheel angle sensor replaced, the fault must be erased using the **RZ005 steering wheel angle offset** command.

GETtheMANUALS.org

IMPORTANT: all work on the airbag and pretensioner systems must be carried out by qualified personnel who have received the proper training.

WARNING: Handling the pyrotechnic systems (pretensioners or airbags) near a source of heat or a flame is forbidden; there is a risk of triggering.

NOTE: locking the airbag computer also unlocks the electric steering column lock.

REMOVAL

Remove the steering wheel airbag. To do this, insert a screwdriver into hole (1) then move it upwards (2).

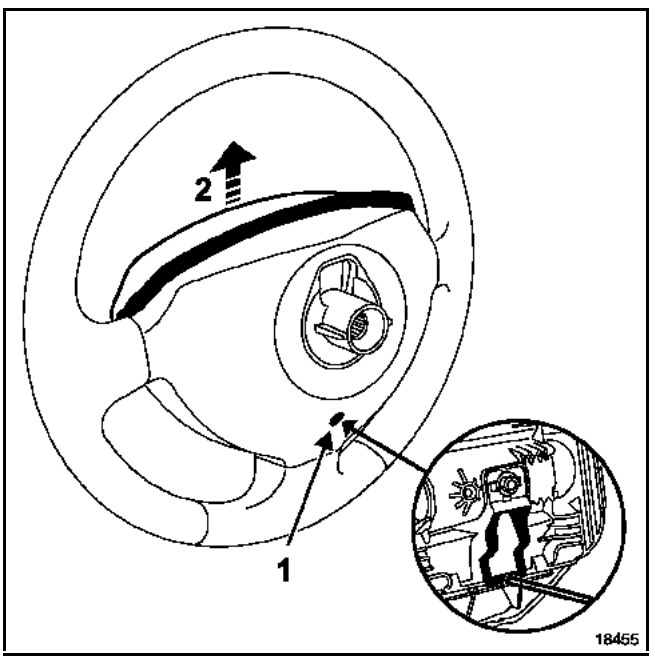

Disconnect the steering wheel airbag connectors (3) and the connectors of the cruise control buttons (according to model).

Remove:
– the steering wheel bolts after setting the wheels straight,
– the steering wheel,
– the steering wheel half-shell casings.

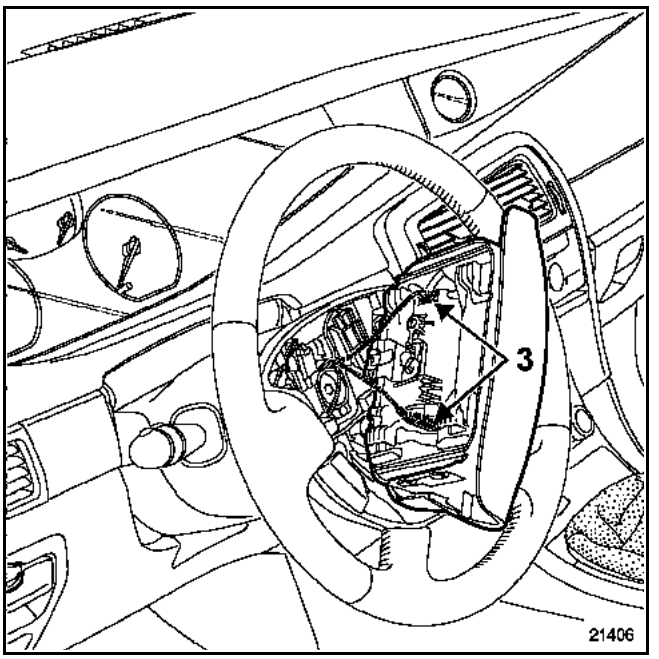

Disconnect the stalks (wipers, radio and lighting controls), the rotary switch connectors (airbag and cruise control).

Before removing the rotary switch assembly, mark its position, checking that the wheels are straight.

Undo the bolt (4) then release the steering column assembly.

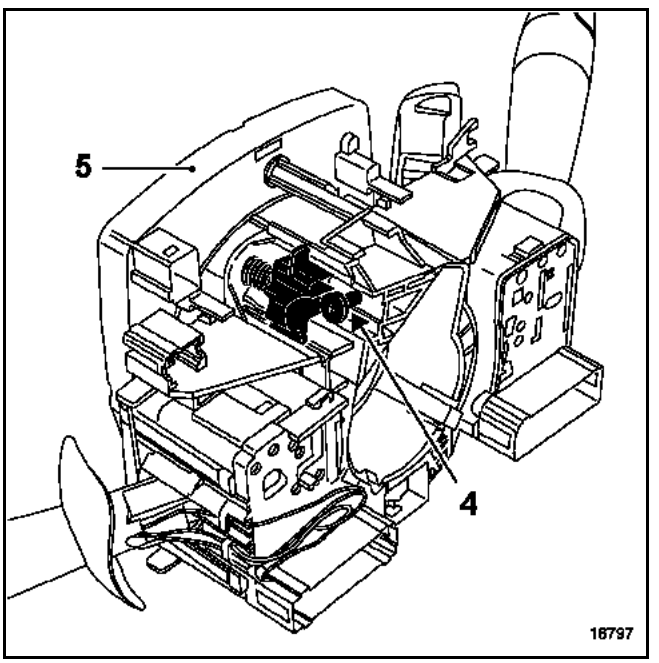

NOTE: it is not necessary to separate the sensor from the steering wheel (5). If it is separated, carry out the initialisation procedure (refer to section **38C ABS**).

GETtheMANUALS.org

REFITTING

Check that the wheels are still straight before positioning and attaching the rotary switch.

Special notes on the steering wheel

IMPORTANT: the splines on the steering wheel have foolproofing devices. **The steering wheel should be inserted freely into the splines.** Be careful not to damage them.

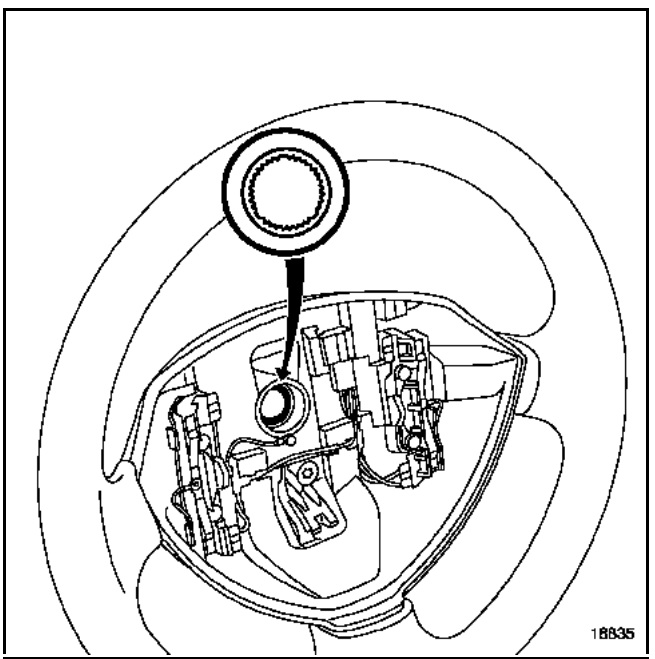

It is essential to replace the steering wheel bolt each time it is removed and to tighten it to a torque of 4.4 daNm.

Special notes on the airbag

IMPORTANT: before reconnecting the driver's airbag, the correct operation of the system must be checked:
- Check that the airbag warning light on the instrument panel is on (ignition on, computer unlocked), switch off the ignition, connect a dummy ignition module to the connector for each airbag. Switch on the ignition and check that the warning light goes out,
- switch off the ignition, connect the airbag in place of the dummy ignition modules and position it on the steering wheel,
- switch on the ignition and check that the warning light comes on for **3 seconds** when the ignition is switched on then goes out.

If the warning light does not go out, refer to the **fault finding** section.

WARNING: If these instructions are not followed the system may not operate normally and could even trigger accidentallly.

Connect the two steering wheel airbag connectors (3) according to their colours.

Ensure that the connectors click in properly.

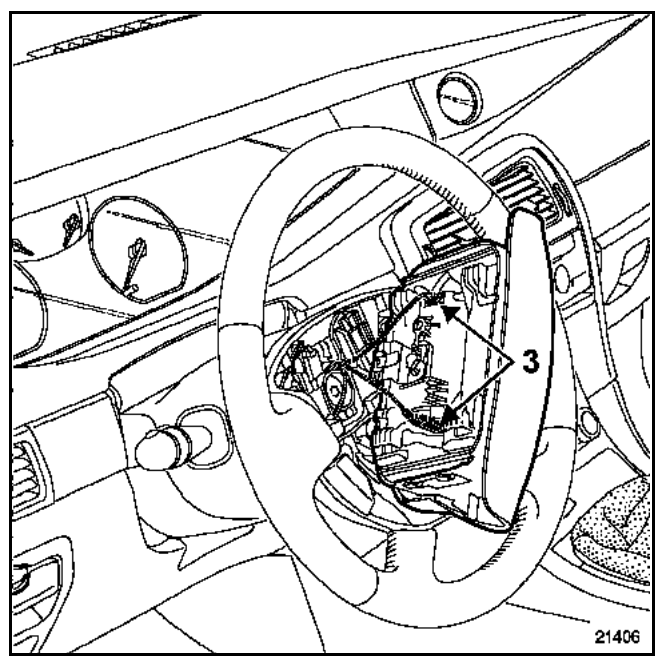

GETtheMANUALS.org

CONNECTION (fullest version)

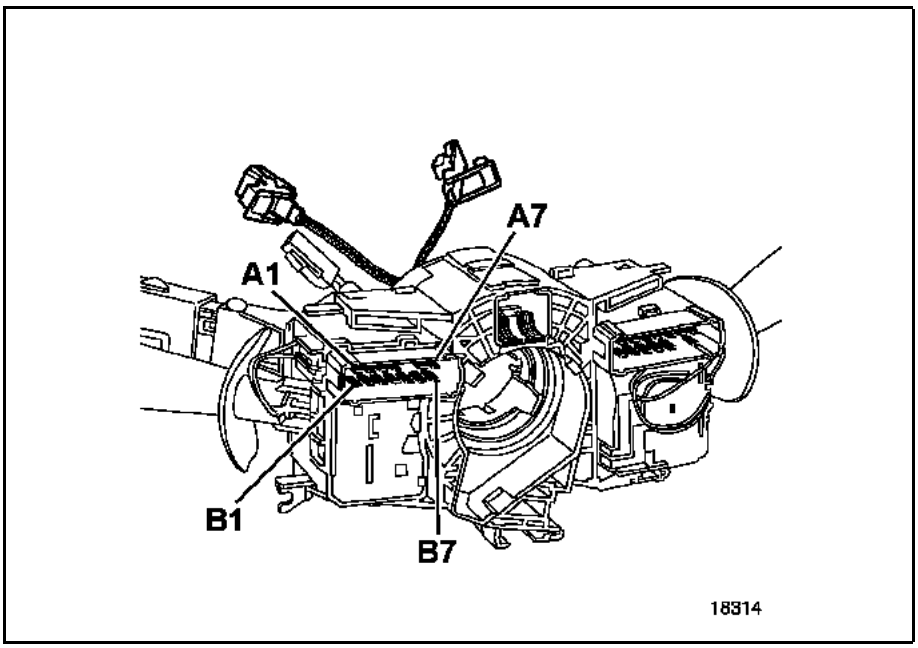

Track	Description
A1	Windscreen wiper interval control
A2	Windscreen wiper high speed control
A3	Windscreen wiper low speed control
A4	Windscreen washer pump control
A5	Not used
A6	Windscreen wiper park position
A7	+ After ignition
B1	Rear screen washer pump control
B2	Rear screen wiper control
B3	Rear windscreen wiper park position
B4	+ After ignition
B5	Earth
B6	Engine speed information
B7	ADAC scroll button

NOTE: The front and rear screen wiper and washer controls can be checked using an ohmmeter.

Control	Track	Values (Ohms)
Windscreen washer pump	A4 / B4	0
Windscreen wiper low-speed control	A3 / A7	0
Windscreen wiper high-speed control	A2 / A7	0
Rear screen wiper intermittent control:	A1 / A7	
Position 1		9.6
Position 2		7.2
Position 3		4.8
Position 4		2.4
Position 5		0
Rear screen washer pump	B1 / B4	0
Rear screen wiper intermittent facility	B2 / B4	0
ADAC scroll button	B5 / B7	0

GETtheMANUALS.org

CONNECTION (fullest version)

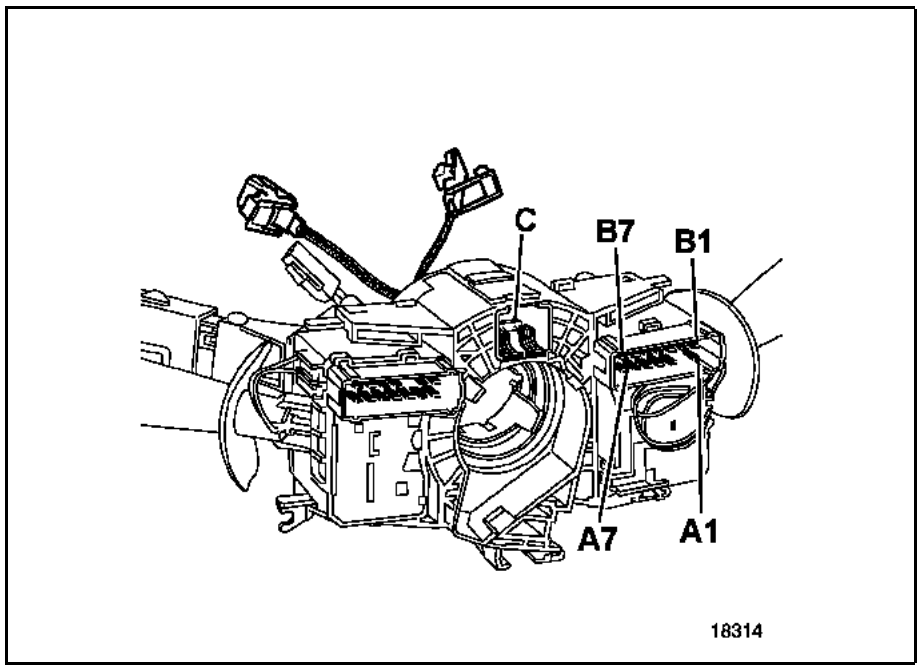

Track	Description
A1	Front fog light relay control
A2	Not used
A3	Rear fog light control
A4	Horn control
A5	RH direction indicator control
A6	+ protected (indicator)
A7	LH direction indicator control
B1	Side lights
B2	+ protected (side lights)
B3	+ protected (dipped headlights)
B4	Dipped headlights (dual lens)
B5	Dipped headlights (single lens)
B6	+ protected (main beam headlights)
B7	Main beam headlights

NOTE: The lighting controls can be checked using an ohmmeter.

The buzzer control and cruise control button controls pass through connector (C) via the rotary connection.

Control	Tracks (closed circuit)
LH direction indicator	A6/A7
RH direction indicator	A5/A6
Side lights	B1/B2
Dipped headlights (dual lens)	B3/B4
Dipped headlights (single lens)	B3/B5
Main beam headlights (on or flash)	B6/B7
Front fog lights	A1/B2
Rear fog lights	A3/B2

GETtheMANUALS.org

Track	Description
1	Not used
2	Earth
3	Flasher timer (+ before ignition feed)
4	Flasher timer

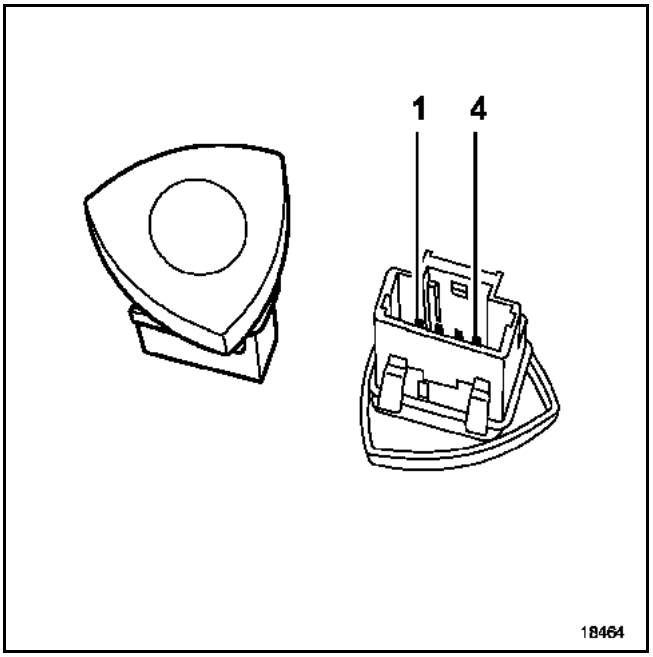

Checks with multimeter

Track	Value	Description
2 and 3	**Infinite resistance**	Hazard warning lights off
2 and 3	**0 Ω**	Hazard warning lights on

GETtheMANUALS.org

CONNECTION

The RENAULT card reader is clipped onto its mounting.

To remove it, refer to Section **83A Dashboard**.

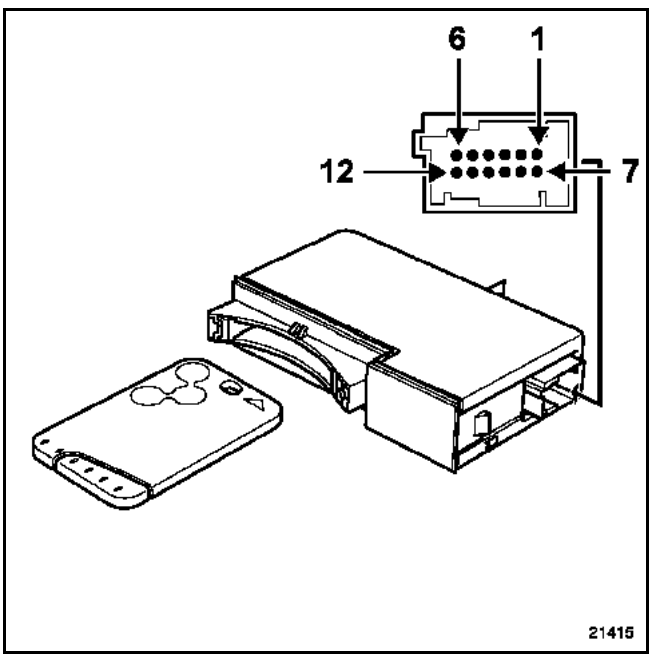

Track	Description
1	UCH coded connection
2	Reader supply
3	Not used
4	UCH coded connection
5	RENAULT Card presence signal (+ Accessories)
6	Radio-controlled signal (remote control)
7	Fully inserted RENAULT Card signal
8	Earth
9	Not used
10	Not used
11	Not used
12	Radio-controlled signal (remote control)

NOTE: if a fault occurs on the reader lighting, the reader must be replaced.

REMINDER: the reader is not coded.

GETtheMANUALS.org

PRECAUTIONS DURING REPAIR

To stop the steering wheel from locking when the battery is disconnected (***vehicle without CARMINAT***), you must:
– fully insert the RENAULT card (+ after ignition) then withdraw it as far as the 1st notch, (+ Accessories). The steering column is not locked for as long as the card remains in the 1st position in the reader. Disconnect the battery, the column remains locked while the battery is not connected and the Renault card is removed, *(**vehicle with CARMINAT**):*
– lock the airbag computer using a diagnostic tool (all types).

REMOVAL

WARNING: the steering column lock is secured with a reverse thread bolt (left-hand thread). Furthermore, it can only be removed if it has been released beforehand.

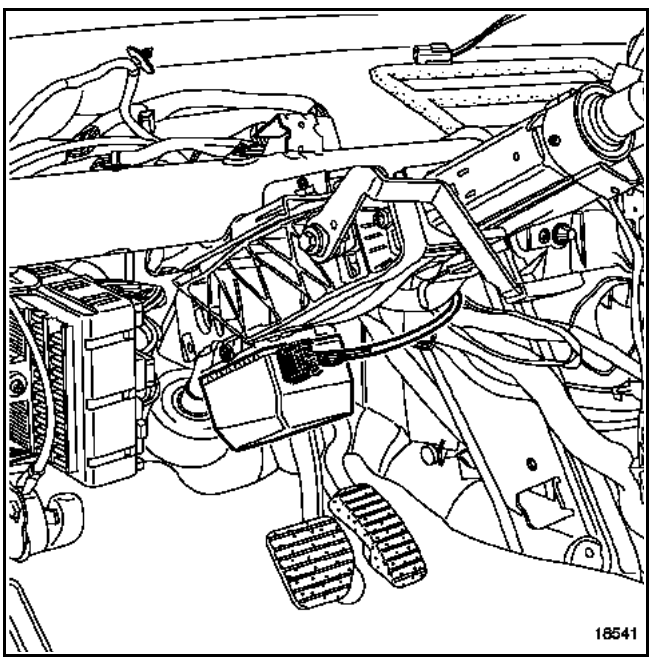

REFITTING

Tighten the bolt to a torque of **0.8 daNm**.

Refer to Section **82A** for information on programming the steering column lock code.

CONNECTION

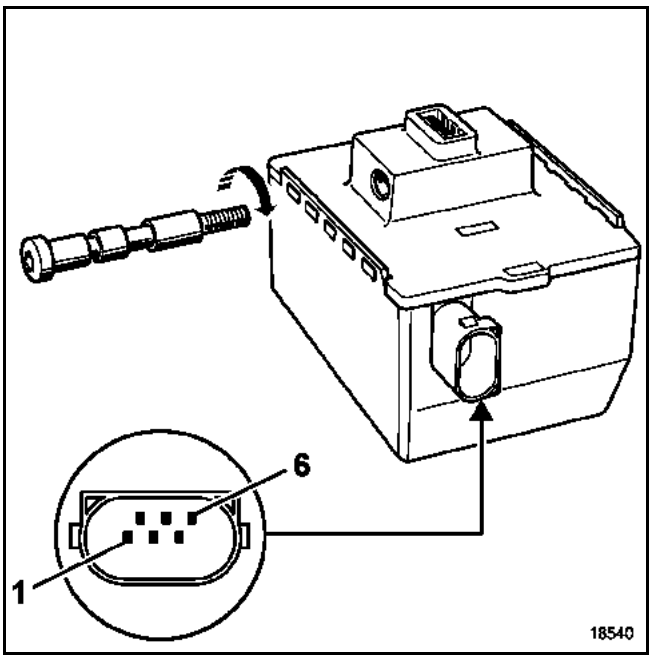

Track	Description
1	Earth
2	Supply (+ 12 V accessories)
3	Multiplex connection
4	UCH control (unlocking)
5	RENAULT Card signal present
6	Multiplex connection

GETtheMANUALS.org

The button is used to start and stop the engine. It has two indicator lights:
– Upper light A: **ready to start signal**,
– Lower light B: **engine running signal**.

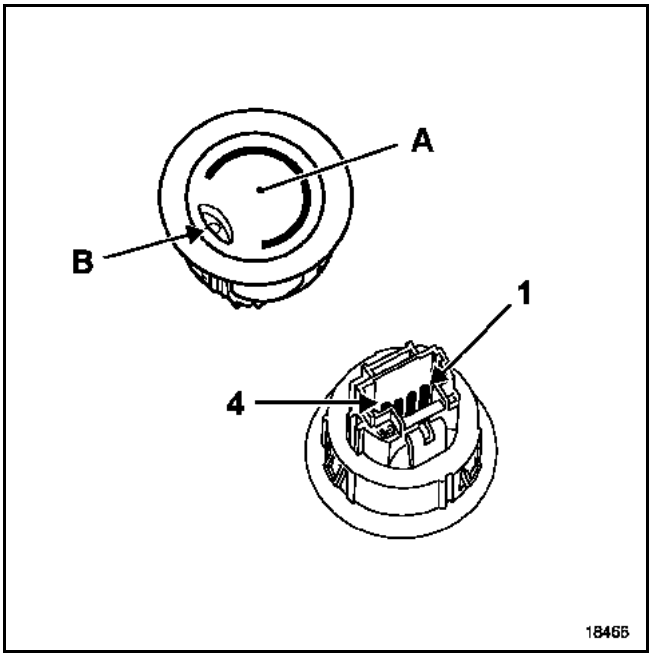

CONNECTION

Track	Description
1	Start/Stop engine button signal
2	Supply
3	**Start prompt** indicator light control
4	**Engine running** indicator light control

The engine start/stop button can be checked with an ohmmeter.

Track	Value	Description
1 and 2	≈ **2 Ω**	Start/Stop pulse
2 and 3	≈ **20 Ω**	**Start prompt** indicator light
2 and 4	≈ **20 Ω**	**Engine running** indicator light

GETtheMANUALS.org

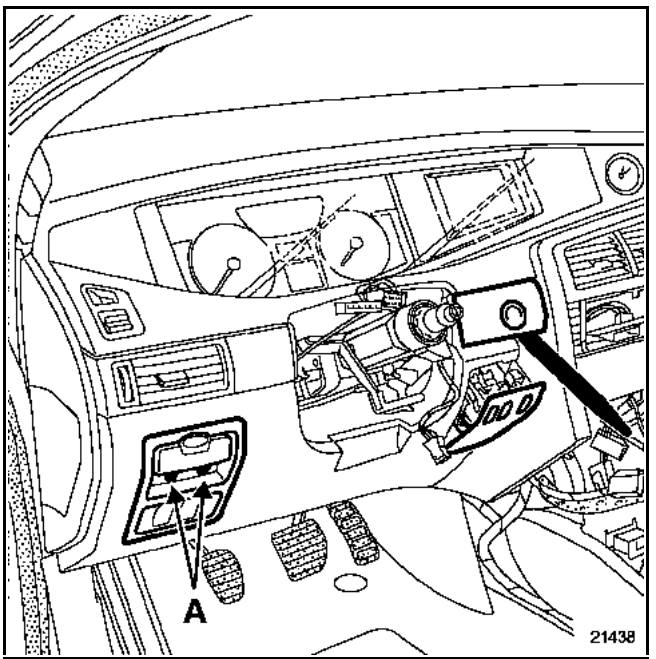

To remove the dimmer, remove the two screws (A) holding the automatic parking brake control, then unclip the plate.

CONNECTION

Track	Description
1	+ Monitor
2	Lighting dimmer
3	Earth

The lighting dimmer can be checked using an ohmmeter:
– lighting button (tracks 1 and 3) ≈ **70 Ω**,
– adjustment knob (tracks 2 and 3) = **from 0 to 1000 Ω**.

GETtheMANUALS.org

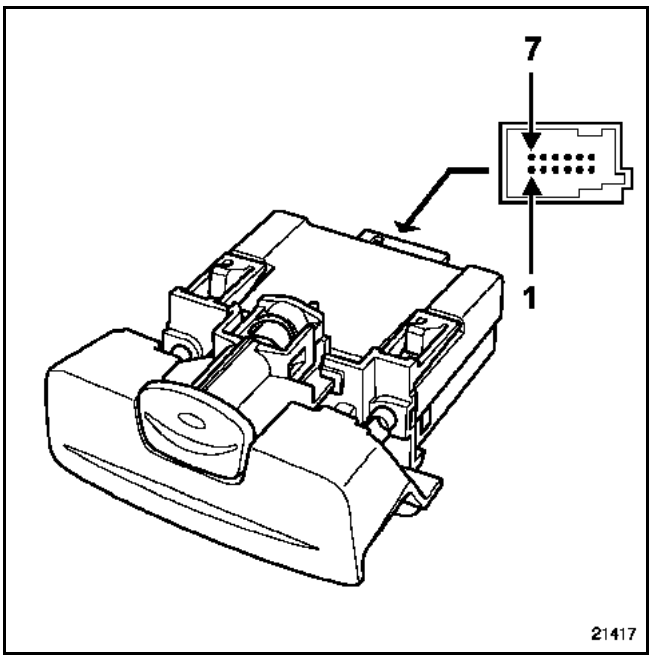

CONNECTION

Track	Description
1	Not used
2	Earth
3	Not used
4	Static release control
5	Activating indicator light control
6	+ Battery
7	Connection to computer (track C2)
8	Not used
9	Connection to computer (track D2)
10	Static activating control
11	Not used
12	+ Brake control lighting

CHECKING

Track	Value	Description
10 and 2 9 and 7	≈ **0 Ω** ≈ **172 Ω**	Static activating
2 and 4 2 and 10 9 and 7	≈ **0 Ω** ≈ **0 Ω** ≈ **172 Ω**	Static release
9 and 7	≈ **2700 Ω**	Rest position

GETtheMANUALS.org

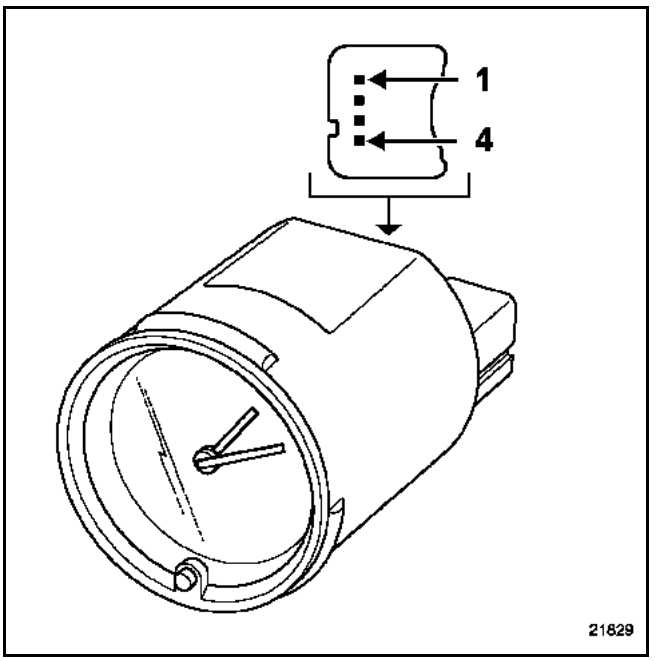

REMOVAL

Remove the glovebox then put your hand inside and push out the clock.

CONNECTION

Track	Description
1	Dimmer lighting earth
2	Light supply
3	+ Battery
4	Earth

GETtheMANUALS.org

The heated rear screen and heated door mirror switch is included in the climate control panel.

The whole control panel must be replaced to replace the switch.

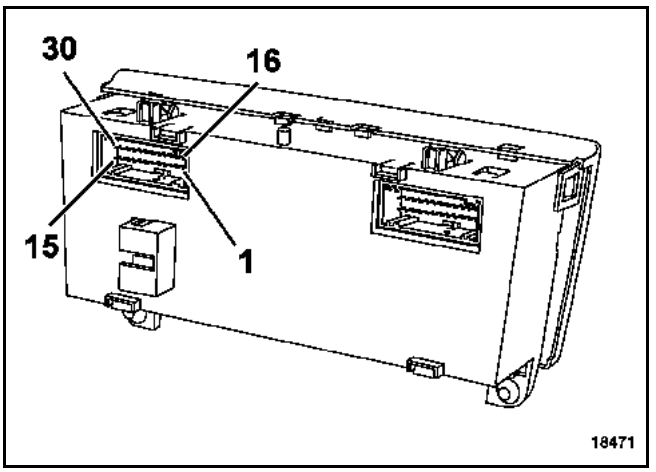

CONNECTION (grey connector)

Track	Description
1	Earth
2	Light supply
4	Electric heated windscreen control (depending on the model)
5	Fault finding line
6	+ After ignition
9	Multiplex connection
10	Multiplex connection
12	Heated rear screen control and door mirrors
14	Earth by rheostat
16	Earth
18	+ before ignition

NOTE: for information on programming other connector tracks, refer to Section **62B Climate control**.

GETtheMANUALS.org

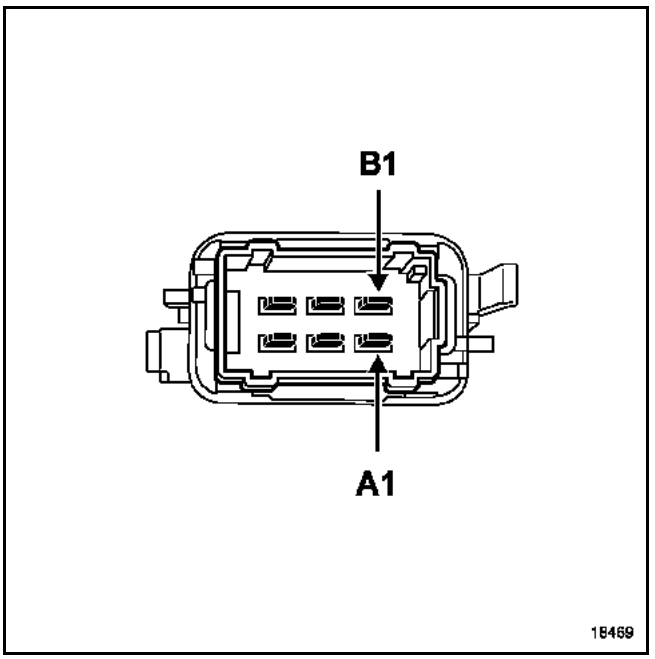

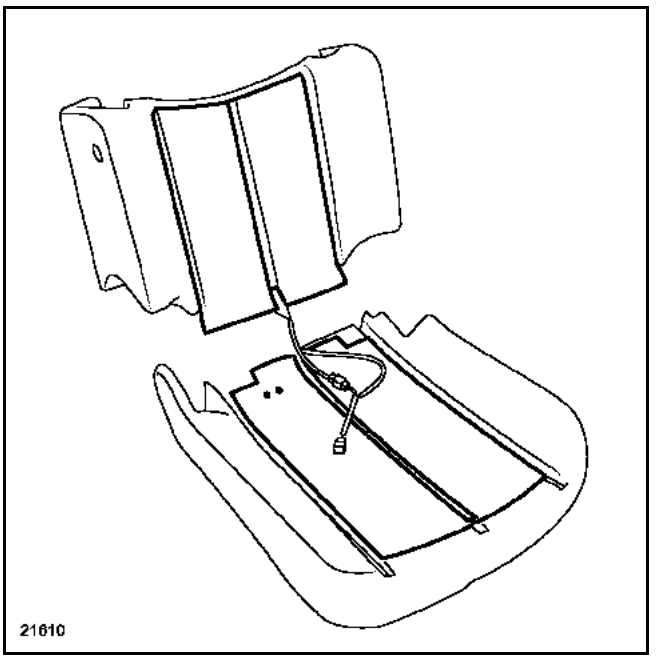

CONNECTION

Track	Description
A1	Indicator light control
A2	Not used
A3	Not used
B1	Panel earth outlet
B2	Earth
B3	+ Lighting

OPERATION

Track	Description	Value in ohms
B2/B1	On	**0 Ω**
B2/B1	Off	**α**

CHECKING THE HEATER PANEL

The resistance of the heater panel (seatback + seat squab) is approximately **2 Ω**.

The heated panel connector can be accessed without stripping the seat, by passing your hand between the seatback and the seat squab.

NOTE: the indicator lit on the instrument panel does not indicate that the system is active.

It is temperature-controlled and does not operate unless the passenger compartment temperature is below **12°C ± 4°C**.

GETtheMANUALS.org

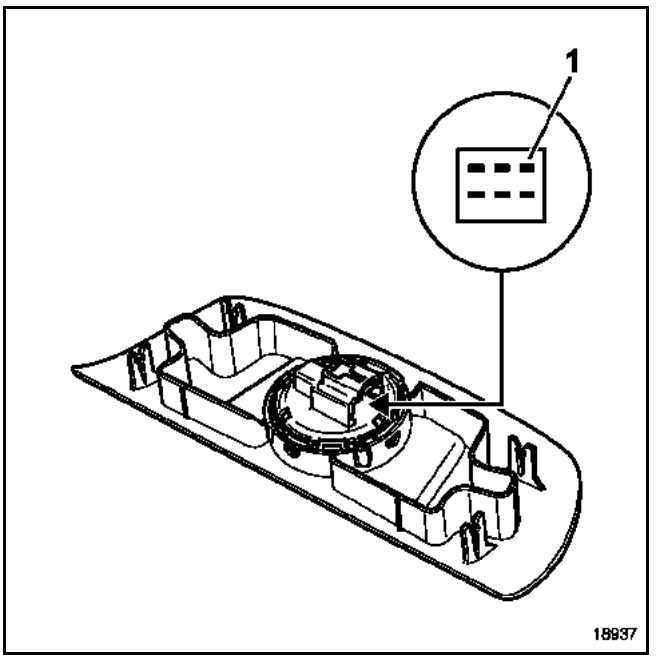

OPERATION (check the resistance using a multimeter)

SWITCH POSITION	Tracks 1 and 6	Tracks 1 and 5	Tracks 1 and 3	Tracks 1 and 2
Slide position 6	0	0	0	1
Slide position 5	0	0	1	1
Slide position 4	0	0	1	0
Slide position 3	0	1	1	0
Slide position 2	0	1	1	1
Slide position 1	0	1	0	1
Closed	0	1	0	0
Tilt position 1	1	1	0	0
Tilt position 2	1	1	0	1
Tilt position 3	1	1	1	0
Pressed	0	0	0	0

N.B.: 0 = circuit loop (closed)
1 = open circuit

GETtheMANUALS.org

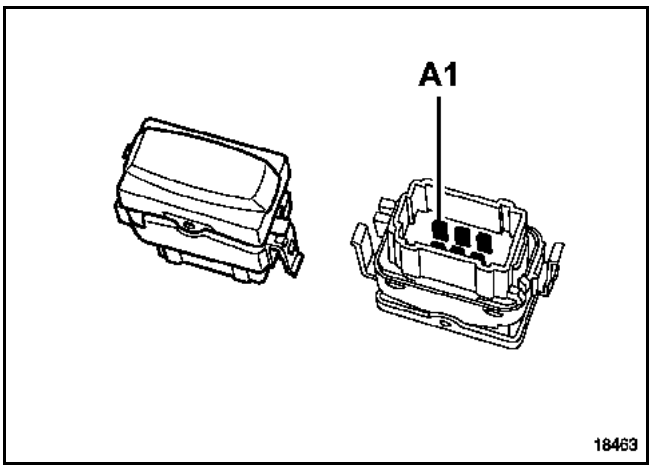

Track	Description
A1	Earth
A2	+ before ignition
A3	Locking
B1	Unlocking
B2	Not used
B3	Light-emitting diode earth

Checks with multimeter

Track	Description	Value
A1 / A2	Button lighting	**30 Ω**
A1 / A3	Locking	**0 Ω**
A1 / B1	Unlocking	**0 Ω**
A2 / B3	Warning light	**1000 Ω**

GETtheMANUALS.org

ELBOW REST (the fullest version)

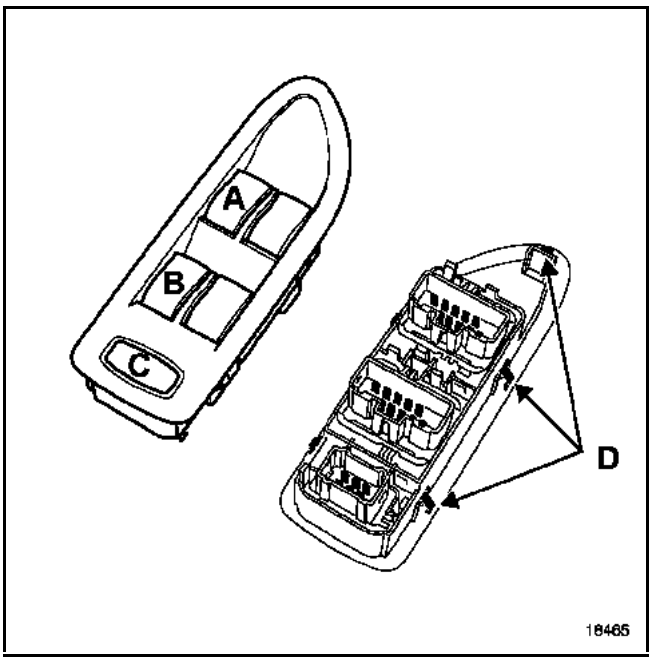

A Driver's and front passenger electric windows switch
B Rear left and right electric windows switch
C Rear electric windows and doors locking switch (according to model)

SWITCH REMOVAL

The electric window control plate is clipped onto the door panel by tabs (D).

There are two simple methods of removing the plate:
– 1) with a pair of crimping pliers,

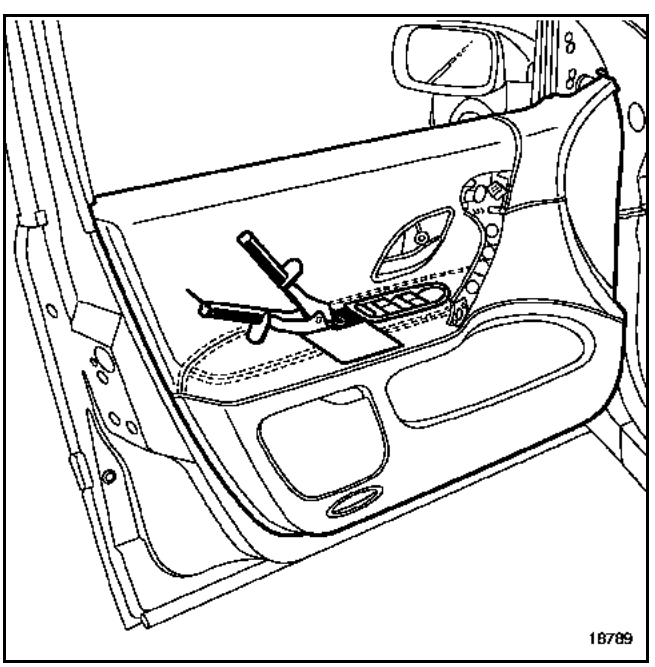

– use an electric wire to press on the latches (D).

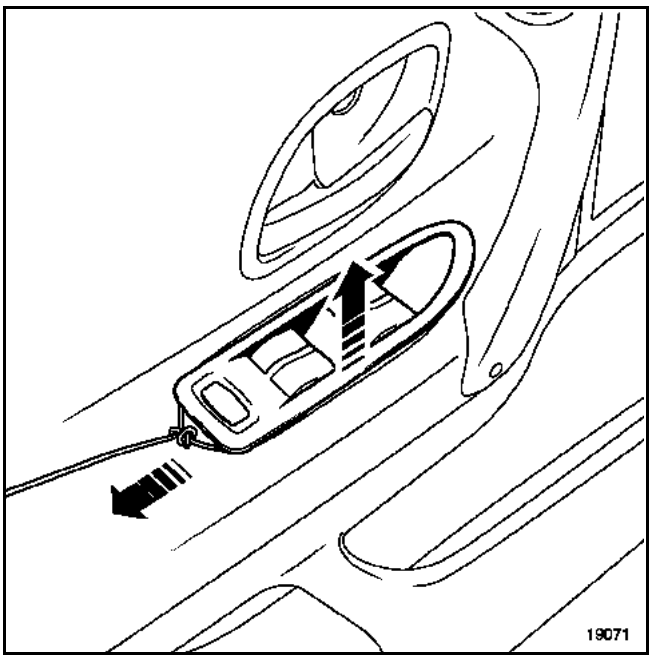

Disconnect the connectors.

GETtheMANUALS.org

ELECTRIC WINDOW SWITCHES ON DRIVER'S DOOR

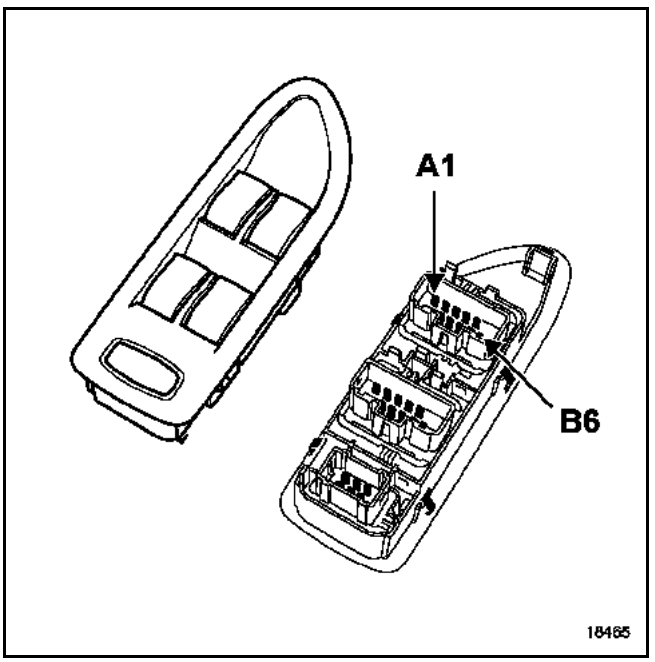

The vehicle may be fitted with two types of front electric window switch:

- **Driver and passenger one touch window without multiplex connection**

Driver and passenger dual control electric window (normal and one touch).

- **Multiplex driver and passenger one-touch electric window**

This is outwardly identical to the model without a multiplex connection, but it is wired differently.

NOTE: These switches light up when the ignition is turned on (not night lighting).

REAR ELECTRIC WINDOW SWITCHES ON DRIVER'S DOOR

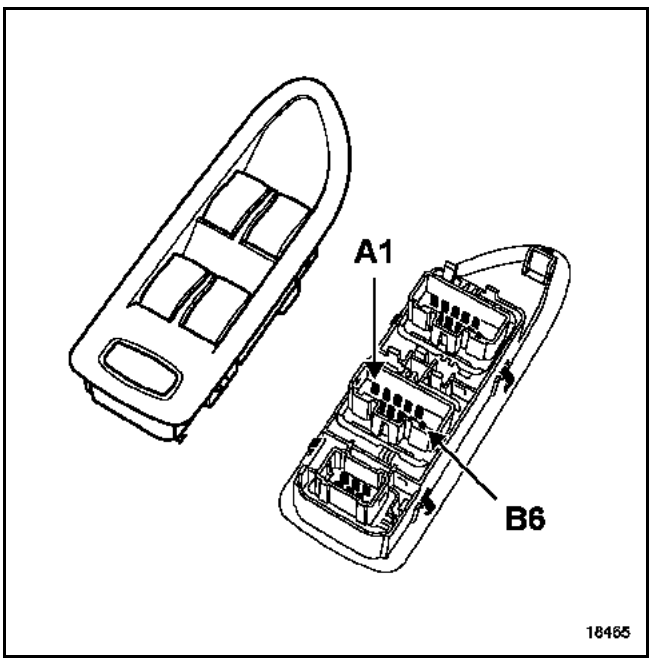

The vehicle may be fitted with two types of dual switches:

- **Electric window**

Rear left and right switches (one position only).

- **One touch electric window**

Two position rear left and right switches (normal and one touch functions for the rear windows).

NOTE: These switches light up when the ignition is turned on (not night lighting).

GETtheMANUALS.org

● **Driver and passenger one touch window without multiplex connection** grey connector (left-hand drive)

Track	Description
A1	Passenger side electric window control
A2	Earth
A3	+ After ignition
A4	Driver's side electric window control
A5	Not used
A6	Not used
B1	Not used
B2	Passenger side electric window control
B3	Earth
B4	Earth
B5	Driver's side electric window control
B6	Not used

OPERATION (check the resistance using a multimeter, value displayed close to 0 ohm)

ACTIONS	Track			
	B2/B3	A1/A2	A4/B4	B5/B4
None	–	–	–	–
Driver basic opening	–	–	0	α
Driver basic closing	–	–	α	0
Driver one touch opening	–	–	≈ 0 Ω (1st notch)	≈ 0 Ω (2nd notch)
Driver one touch closing	–	–	≈ 0 Ω (2nd notch)	≈ 0 Ω (1st notch)
Passenger basic opening	α	≈ 0 Ω	–	–
Passenger basic closing	≈ 0 Ω	α	–	–
Passenger one touch opening	≈ 0 Ω (2nd notch)	≈ 0 Ω (1st notch)	–	–
Passenger one touch closing	≈ 0 Ω (1st notch)	≈ 0 Ω (2nd notch)	–	–

● **Driver and passenger one touch window without multiplex connection** grey connector (right-hand drive)

Track	Description
A1	Driver's side electric window control
A2	Not used
A3	+ After ignition
A4	Connection earth with passenger switch
A5	Passenger side electric window switch
A6	Not used
B1	Not used
B2	Not used
B3	Driver's side electric window control
B4	Earth
B5	Connection earth with passenger switch
B6	Passenger side electric window switch

OPERATION (check the resistance using a multimeter, value displayed close to 0 ohm)

ACTIONS	Track			
	A1/B4	B3/B4	B4/A5	B4/B6
None	–	–	–	–
Driver basic opening	≈ 0 Ω	α	–	–
Driver basic closing	α	≈ 0 Ω	–	–
Driver one touch opening	≈ 0 Ω (1st notch)	≈ 0 Ω (2nd notch)	–	–
Driver one touch closing	≈ 0 Ω (2nd notch)	≈ 0 Ω (1st notch)	–	–
Passenger basic opening			α	≈ 0 Ω
Passenger basic closing			≈ 0 Ω	α
Passenger one touch opening			≈ 0 Ω (2nd notch)	≈ 0 Ω (1st notch)
Passenger one touch closing			≈ 0 Ω (1st notch)	≈ 0 Ω (2nd notch)

GETtheMANUALS.org

● **Multiplex driver and passenger side one touch electric window:** black connector (all types)

Track	Description
A1	Not used
A2	Right-hand electric window control
A3	+ After ignition
A4	Left-hand electric window control
A5	Not used
A6	Not used
B1	Not used
B2	Not used
B3	Right-hand electric window control
B4	Earth
B5	Left-hand electric window control
B6	Not used

OPERATION (check the resistance using a multimeter)

ACTIONS	Track			
	A2/B4	B3/B4	A4/B4	B5/B4
None	–	–	–	–
Left-hand basic opening	–	–	≈ 0 Ω	α
Left-hand basic closing	–	–	α	≈ 0 Ω
Left-hand one touch opening	–	–	≈ 0 Ω (1st notch)	≈ 0 Ω (2nd notch)
Left-hand one touch closing	–	–	≈ 0 Ω (2nd notch)	≈ 0 Ω (1st notch)
Right-hand basic opening	≈ 0 Ω	α	α	α
Right-hand basic closing	α	≈ 0 Ω	α	α
Right-hand one touch opening	≈ 0 Ω (1st notch)	≈ 0 Ω (2nd notch)	α	α
Right-hand one touch closing	≈ 0 Ω (2nd notch)	≈ 0 Ω (1st notch)	α	α

● **Basic rear electric window:** white connector (all types)

Track	Description
A1	Not used
A2	Right-hand electric window control
A3	+ After ignition
A4	Left-hand electric window control
A5	+ After ignition
A6	Not used
B1	Not used
B2	Not used
B3	Right-hand electric window control
B4	Earth
B5	Left-hand electric window control
B6	Not used

OPERATION (check the resistance using a multimeter)

ACTIONS	Track			
	A4	B5	A2	B3
None	**A5**	**A5**	**B5**	**A5**
Right opening	–	–	**B4**	**A5**
Right-hand closing	–	–	**A5**	**B4**
Left-hand opening	**B4**	**A5**	–	–
Left-hand closing	**A5**	**B4**	–	–

GETtheMANUALS.org

- **One-touch rear electric window:** brown connector (all types)

Track	Description
A1	Connection with rear right-hand control
A2	Rear right-hand electric window control
A3	+ After ignition
A4	Rear left-hand electric window control
A5	Connection with rear left-hand control
A6	Not used
B1	Not used
B2	Connection with rear right-hand control
B3	Right-hand electric window control
B4	Earth
B5	Left-hand electric window control
B6	Connection with rear left-hand control

OPERATION (check the resistance using a multimeter, value displayed close to 0 ohm)

ACTIONS	Track			
	A5/B4	B6/B4	A1/B4	B2/B4
None	–	–	–	–
Right-hand basic opening	–	–	≈ 0 Ω	α
Right-hand basic closing	–	–	α	≈ 0 Ω
Right-hand one touch opening	–	–	≈ 0 Ω (1st notch)	≈ 0 Ω (2nd notch)
Right-hand one touch closing	–	–	≈ 0 Ω (2nd notch)	≈ 0 Ω (1st notch)
Left-hand basic opening	≈ 0 Ω	α	–	–
Left-hand basic closing	α	≈ 0 Ω	–	–
Left-hand one touch opening	≈ 0 Ω (1st notch)	≈ 0 Ω (2nd notch)	–	–
Left-hand one touch closing	≈ 0 Ω (2nd notch)	≈ 0 Ω (1st notch)	–	–

GETtheMANUALS.org

PASSENGER-SIDE ELECTRIC WINDOW SWITCH ON PASSENGER DOOR

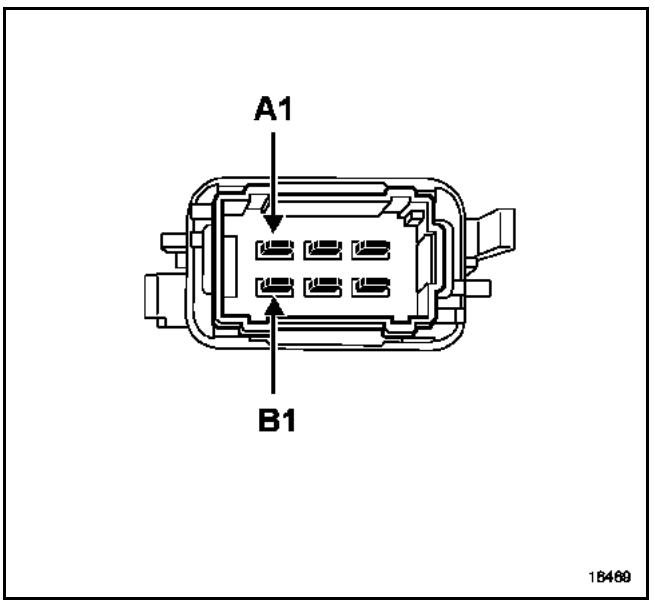

The vehicle may be fitted with two types of front electric window switch:

- **one touch electric window without multiplex connection**
- **one touch electric window with multiplex connection**

Operation (check the resistance using a ohmmeter, value displayed close to 0 ohm)

One touch electric window without multiplex connection:
grey connector (all types)

Track	Description
A1	Electric window control
A2	Electric window control
A3	Connection with driver switch earth
B1	Connection with driver switch earth
B2	Earth
B3	+ After ignition

ACTIONS	Track	
	A1/B1	A2/A3
None	α	α
Basic opening	$\approx 0\ \Omega$	α
Basic closing	α	$\approx 0\ \Omega$
One touch opening	$\approx 0\ \Omega$ (1st notch)	$\approx 0\ \Omega$ (2nd notch)
One touch closing	$\approx 0\ \Omega$ (2nd notch)	$\approx 0\ \Omega$ (1st notch)

One touch electric window with multiplex connection:
black connector (all types)

Track	Description
A1	Not used
A2	Earth
A3	Electric window control
B1	Electric window control
B2	Not used
B3	+ After ignition

ACTIONS	Track	
	A3 / A2	B1 / A2
None	α	α
Basic opening	α	$\approx 0\ \Omega$
Basic closing	$\approx 0\ \Omega$	α
One touch opening	$\approx 0\ \Omega$ (2nd notch)	$\approx 0\ \Omega$ (1st notch)
One touch closing	$\approx 0\ \Omega$ (1st notch)	$\approx 0\ \Omega$ (2nd notch)

GETtheMANUALS.org

REAR DOOR ELECTRIC WINDOW SWITCHES

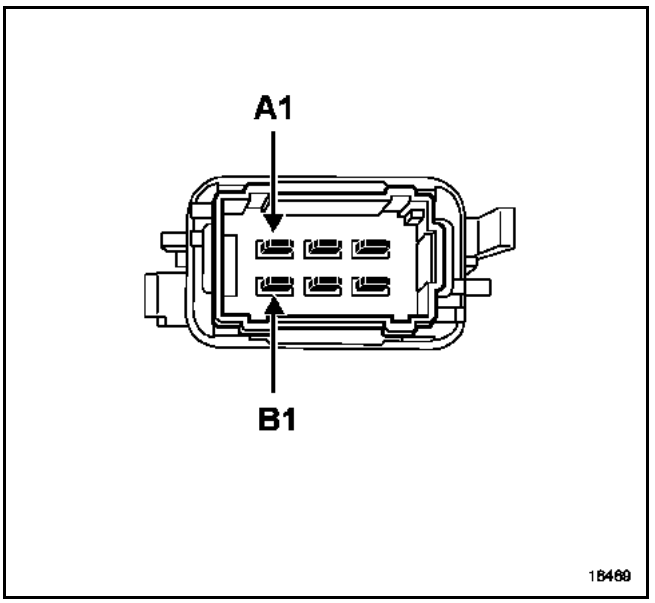

Basic electric window switch

Track	Description
A1	Connection with driver's side control
A2	Earth
A3	Electric window motor
B1	Electric window motor
B2	Connection with driver's side control
B3	+ After ignition

ACTIONS	TRACKS			
	A2/A3	B1/B2	B1/A2	A1/A3
None	α	$\approx 0\ \Omega$	α	$\approx 0\ \Omega$
Basic closing	$\approx 0\ \Omega$	$\approx 0\ \Omega$	–	–
Basic opening	–	–	$\approx 0\ \Omega$	$\approx 0\ \Omega$

Rear anti-pinch electric window switch: white connector

Track	Description
A1	Electric window control
A2	Switched earth (electric window lock)
A3	Connection with driver's electric window control
B1	Connection with driver's electric window control
B2	Electric window control
B3	+ After ignition switch lighting

ACTIONS	TRACKS	
	A1/A2	A2/B2
None	–	–
Basic closing	0*	–
Basic opening	–	0*
One touch closing	0* (1st contact)	0* (2nd contact)
One touch opening	0* (1st contact)	0* (2nd contact)

***IMPORTANT:**
It is not possible to check the switches with a multimeter.

However, it is possible to shunt the corresponding tracks, to determine the condition of the switch.

GETtheMANUALS.org

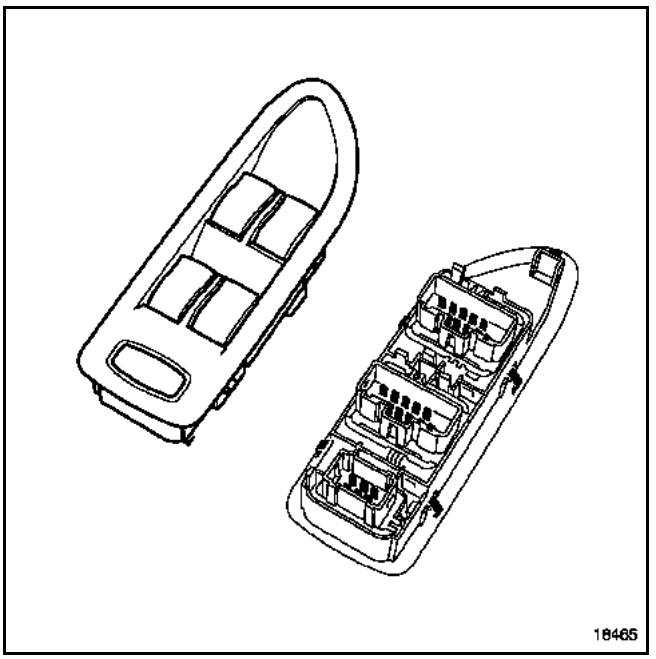

A red light on the switch, operated by the UCH, is lit when the lock is applied. This switch is used to prevent the opening of the windows and rear doors (depending on the car model).

● **Electric window**
Pressing the child lock switch sends a message to the UCH, which operates the child lock relay.

● **One touch electric window**
The child lock switches on or off, the control earth on the one touch rear electric window switches and sends a signal to the UCH to inform it of the present state.

NOTE: These switches light up when the ignition is turned on (not night lighting).

Track	Description
A1	+ After ignition
A2	Not used
A3	Child locking indicator light control (according to model)
B1	Rear electric window locking/child locking (according to model)
B2	Earth
B3	Not used

GETtheMANUALS.org

To allow the use of the hands-free option, the door handles must be fitted with the following types of sensor:
– the presence sensor (A), accompanied by a door handle reflector, which detects the user's hand,
– the movement sensor, to open the door when the presence sensors no longer operate (this occurs when the car has not been used for a long period of time).

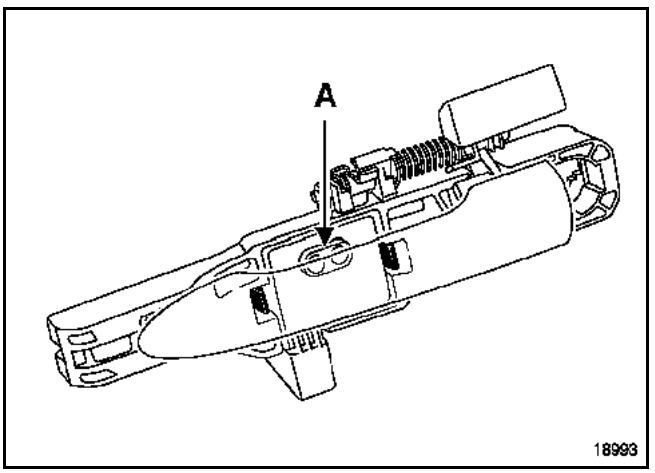

NOTE: Refer to the **Bodywork** section for removal of the handle.

CONNECTION

Track	Description
1	Sensor signal
2	Earth
3	+ Battery

IMPORTANT: The presence sensor must be accompanied by a translucent cover and a reflector fitted to the handle to detect the user's hand. Cracks or scratches may impair the working of the hands-free opening device.

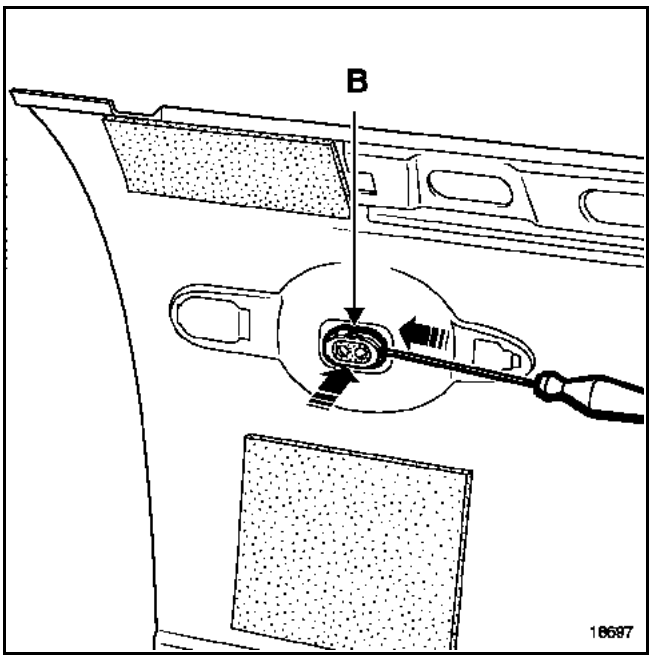

GETtheMANUALS.org

Each car has a different door locking system appropriate to the equipment level fitted.

- **the basic version** (4 track connector) is fitted with electric locks and a closing sensor, but not with body flange sensors.
- **the top of the range version** (6 track connector) is fitted with a central locking system that can disable the internal door handles. This system can also control the child lock system.

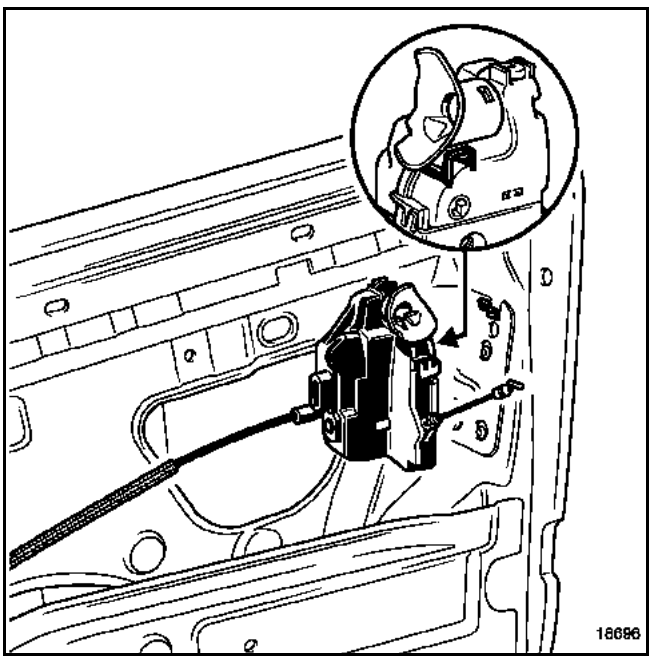

CONNECTION

- **Basic version (left-hand side)**

Track	Description
A	+ locking motor
B	- locking motor
C	Door switch
D	Door switch

- **Basic version (right-hand side)**

Track	Description
A	Door switch
B	Door switch
C	- locking motor
D	+ locking motor

- **Top of the range version (front left)**

Track	Description
A	+ locking motor
B	- locking motor
C	Door switch
D	Door switch
E	- central locking or child locking system motor (rear door)
F	+ central locking or child locking system motor (rear door)

- **Top of the range version (front right)**

Track	Description
A	+ central locking or child locking system motor (rear door)
B	- central locking system motor
C	Door switch
D	Door switch
E	- locking motor
F	+ locking motor

- **Top of the range version (rear left)**

Track	Description
A	+ locking motor
B	- locking and child locking system motor
C	Door switch/child lock switch
D	Door switch
E	+ child central locking system motor
F	Child lock switch

- **Top of the range version (rear right)**

Track	Description
A	Child lock switch
B	+ central locking or child locking system motor (rear door)
C	Door switch
D	Door switch/child lock switch
E	- locking and child locking system motor
F	+ locking motor

GETtheMANUALS.org

TAILGATE SWITCH

The trim must be removed to remove the tailgate opening control. Refer to the **Bodywork** section for more information.

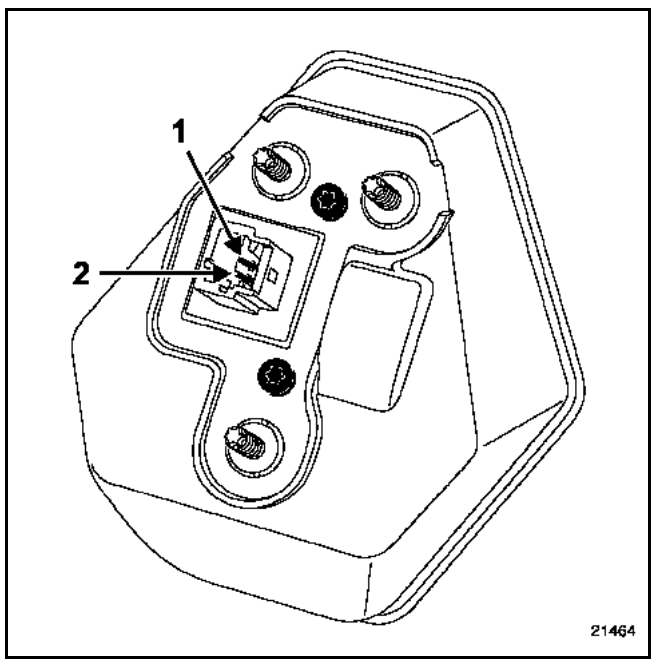

CONNECTION

Track	Description
1	Connection with track 1 of the lock
2	Earth

TAILGATE LOCK

The trim must be removed to remove the tailgate opening control. Refer to the **Bodywork section** for more information.

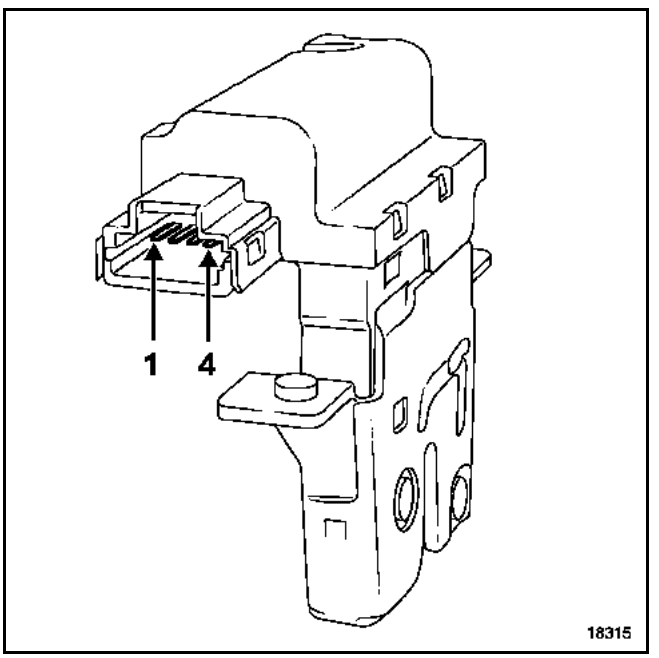

CONNECTION

Track	Description
1	- Motor (tailgate switch)
2	+ Motor (UCH)
3	Opening signal
4	Earth

GETtheMANUALS.org

The trim must be removed to remove the tailgate electric striker plate. Refer to the **Bodywork section** for more information.

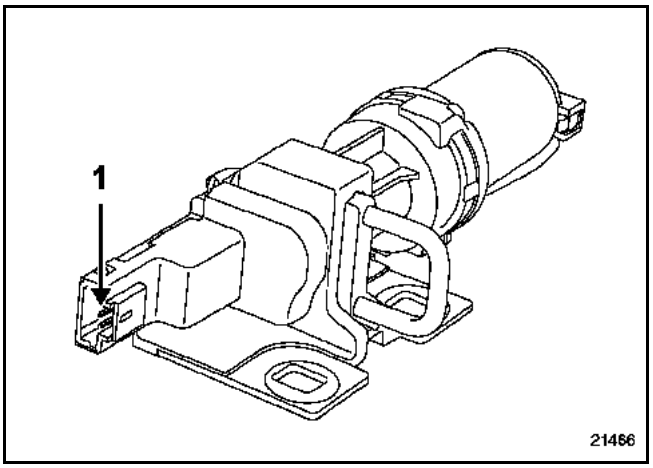

Track	Description
1	Earth
2	+ before ignition
3	Striker plate control relay
4	Striker plate position signal

GETtheMANUALS.org

ELECTRIC DOOR MIRROR CONTROLS

There are several types of door mirror control, according to the level of equipment fitted:

- **Basic electric door mirror control**
- **Non-multiplex tilting electric door mirror control**
- **Multiplex tilting electric door mirror control**

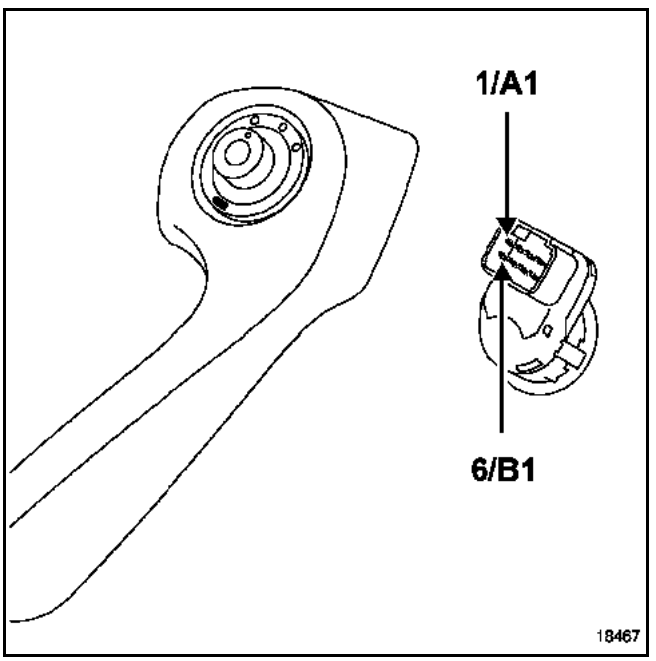

- **Basic electric door mirror control**

Track	Description
A1	Up/down movement of the driver's door mirror
A2	+ before ignition
A3	Left/right movement of the driver's door mirror
A4	Not used
B1	Left/right movement of the passenger's door mirror
B2	Up/down movement of the passenger's door mirror
B3	Earth
B4	Motor common line

NOTE: the controls for the multiplex and non-multiplex door mirrors are identical, but they have different wiring.

- **Tilting electric door mirror multiplex control (option: store driver's seat position)**

Track	Description
1	Driver's and passenger door mirror signals
2	+ After ignition
3	Earth
4	Door mirror motor common line
5	Tilting rear-view mirror common line
6	Up/down control for the passenger's door mirror
7	Up/down control for the driver's door mirror
8	Left/right control for the passenger's door mirror
9	Left/right control for the driver's door mirror
10	Not used

- **Non-multiplex tilting electric door mirror control (no memory)**

Track	Description
1	Tilting motors common line (track 3B)
2	+ After ignition
3	Door mirrors common line (track 2C)
4	Earth
5	+ before ignition
6	Up/down movement of the passenger's door mirror (track 2B)
7	Up/down movement of the driver's door mirror (track 2B)
8	Left/right movement of the passenger's door mirror (track 2A)
9	Left/right movement of the driver's door mirror (track 2A)
10	Door mirror tilt control (track 3C)

NOTE: These switches light up when the ignition is turned on (not night lighting).

GETtheMANUALS.org

The interior rear-view mirror can be fitted with the autodimming (electro-chrome) system.

This system works by comparing levels of brightness gauged by two sensors:
– sensor A on the windscreen side,
– sensor B on the mirror side.

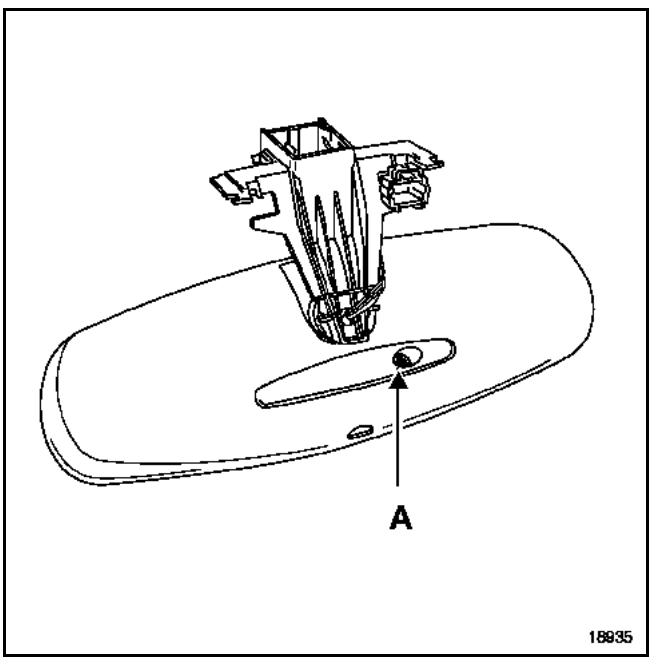

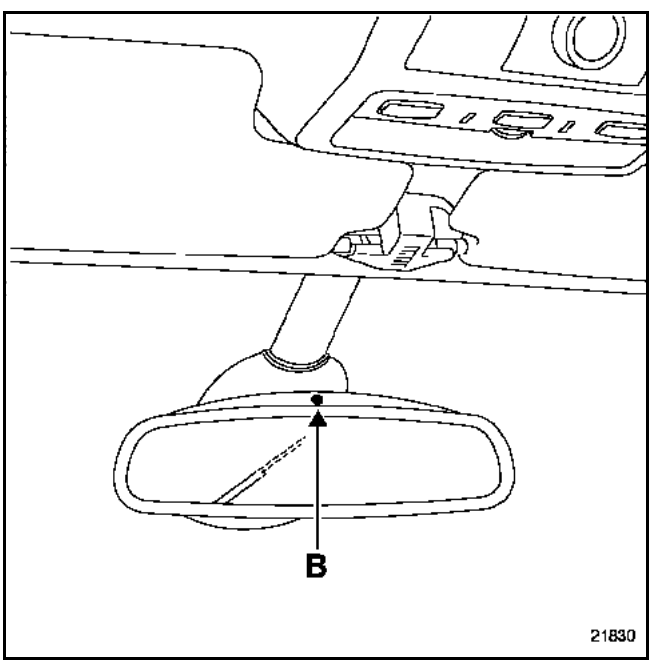

NOTE: the door mirrors can also be fitted with this system. In this case, the mirror dimming is controlled by the interior rear-view mirror. (There are no light sensors on the door mirrors).

CONNECTION

Track	Description
1	Supply
2	Earth
3	Brightness information (track 3E door mirror)
4	Brightness information (track 3D)

GETtheMANUALS.org

The components of the electric door mirrors are:
– two motors for vertical and horizontal movement,
– an external temperature sensor (right hand side),
– a tilt motor (according to model),
– a heating system (according to model),
– an autodimming system linked to the interior rear-view mirror to dim the mirrors in bright light (according to model),
– a multiplex connection (according to model).

NOTE: The door trim does not need to be removed to remove the door mirrors.

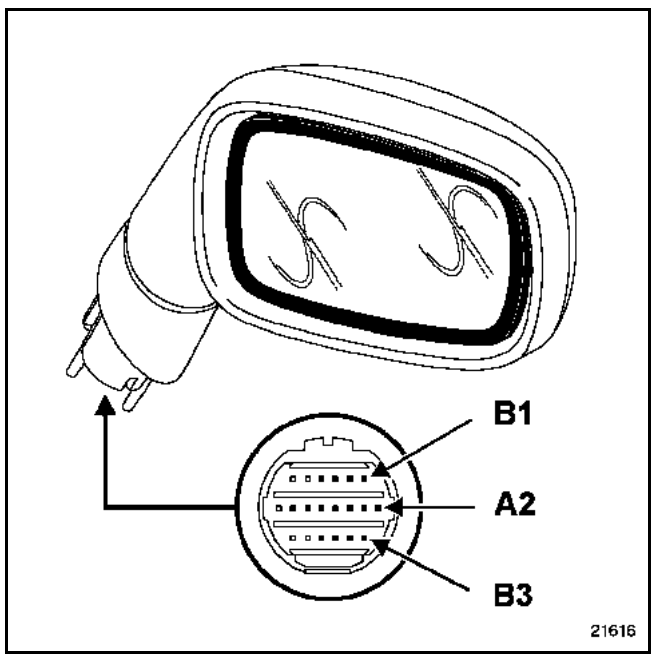

IMPORTANT: on cars fitted with the **Driving position memory** option, the passenger's door mirror is fitted with a multiplex connection. This connection allows information stored in the electric window motor (see Section **88D: Driving position memory**) to be collected.

CONNECTION (fullest version)

Track	Description
1B	Door mirror demisting
1C	Door mirror demisting
1D	Temperature sensor (right-hand side)
1E	Temperature sensor (right-hand side)
1F	Not used
1G	Not used
2A	Horizontal adjustment motor
2B	Vertical adjustment motor
2C	Motor common
2D	Horizontal position potentiometer
2E	Vertical position potentiometer
2F	Supply
2G	Earth
2H	Not used
3B	Tilt motor
3C	Tilt motor
3D	Brightness information (interior rear-view mirror)
3E	Brightness information (interior rear-view mirror)
3F	Not used
3G	Not used

The resistance of the heating system is approximately **10 Ω**.

The autodimming system can be checked with a **1.5 V** (R6) battery on **tracks 3D** and **3E**.

The mirror should progressively darken.

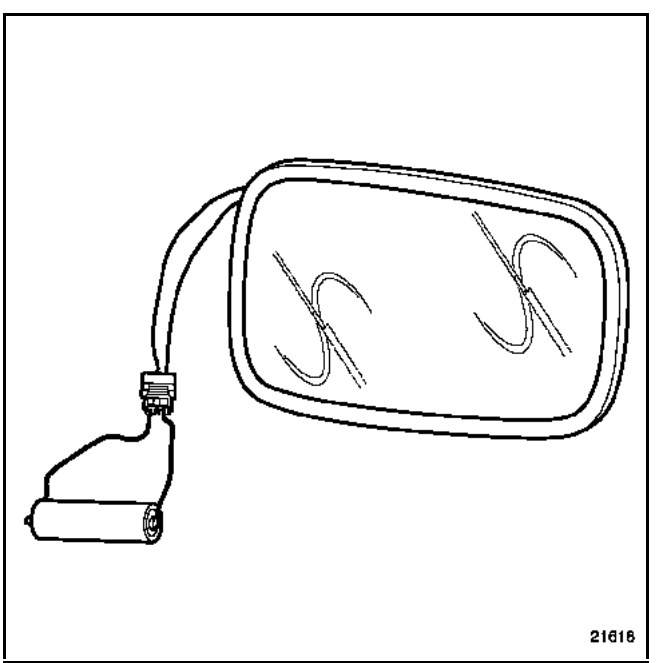

GETtheMANUALS.org

The tailgate external temperature sensor is located in the right-hand side door mirror.

It is necessary to remove the half shell and the reflective glass to access the sensor (see **Bodywork section**).

REMOVAL

Unclip the sensor (1) and cut the wires.

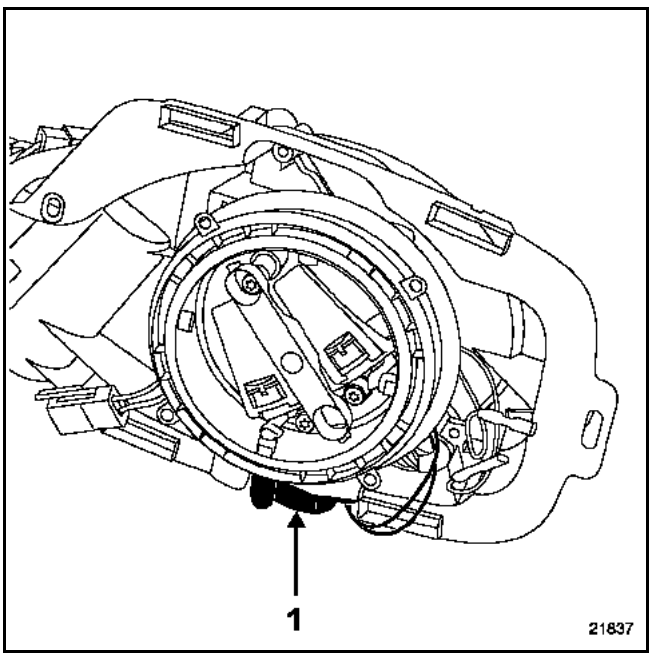

REFITTING

Reconnect the two temperature sensor wires using heat-shrink sleeves.

Check the resistance of the temperature sensor

Approximate temperature in °C	Sensor resistance in ohms
between 0 and 5	between 5400 and 6200
between 6 and 10	between 4400 and 5400
between 11 and 15	between 3700 and 4400
between 16 and 20	between 3000 and 3700
between 21 and 25	between 2500 and 3000
between 26 and 30	between 2100 and 2500
between 31 and 35	between 1700 and 2100
between 36 and 40	between 1450 and 1700

GETtheMANUALS.org

Incorrect external temperature display

No demisting

No autodimming function on one or more door mirrors

No autodimming function on the interior rear-view mirror

Door mirrors cannot be electrically adjusted

Door mirrors cannot be electrically tilted

Basic electric door mirror control

Tilting door mirror control

Multiplex door mirror control

GETtheMANUALS.org

Incorrect external temperature display

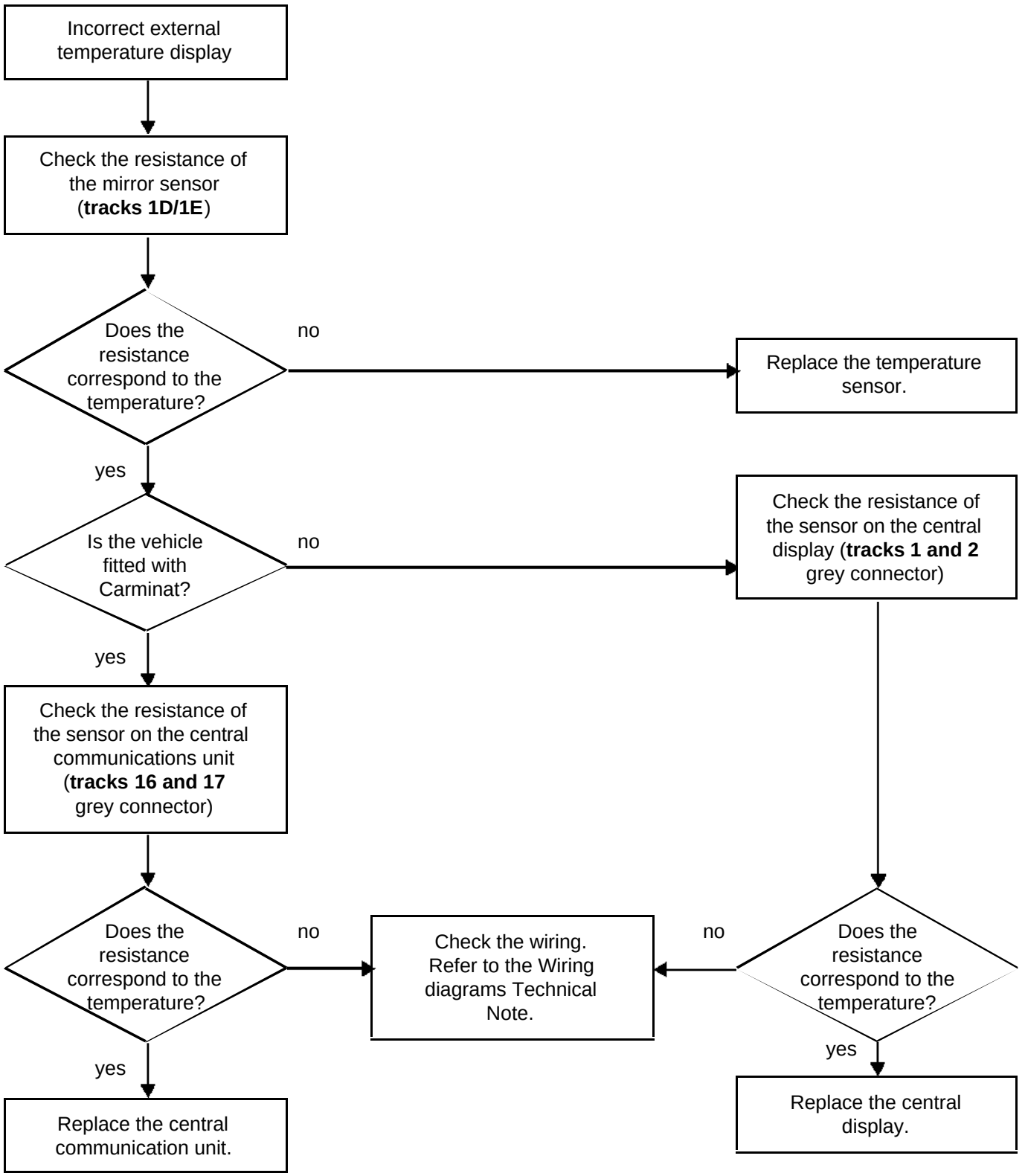

GETtheMANUALS.org

No demisting

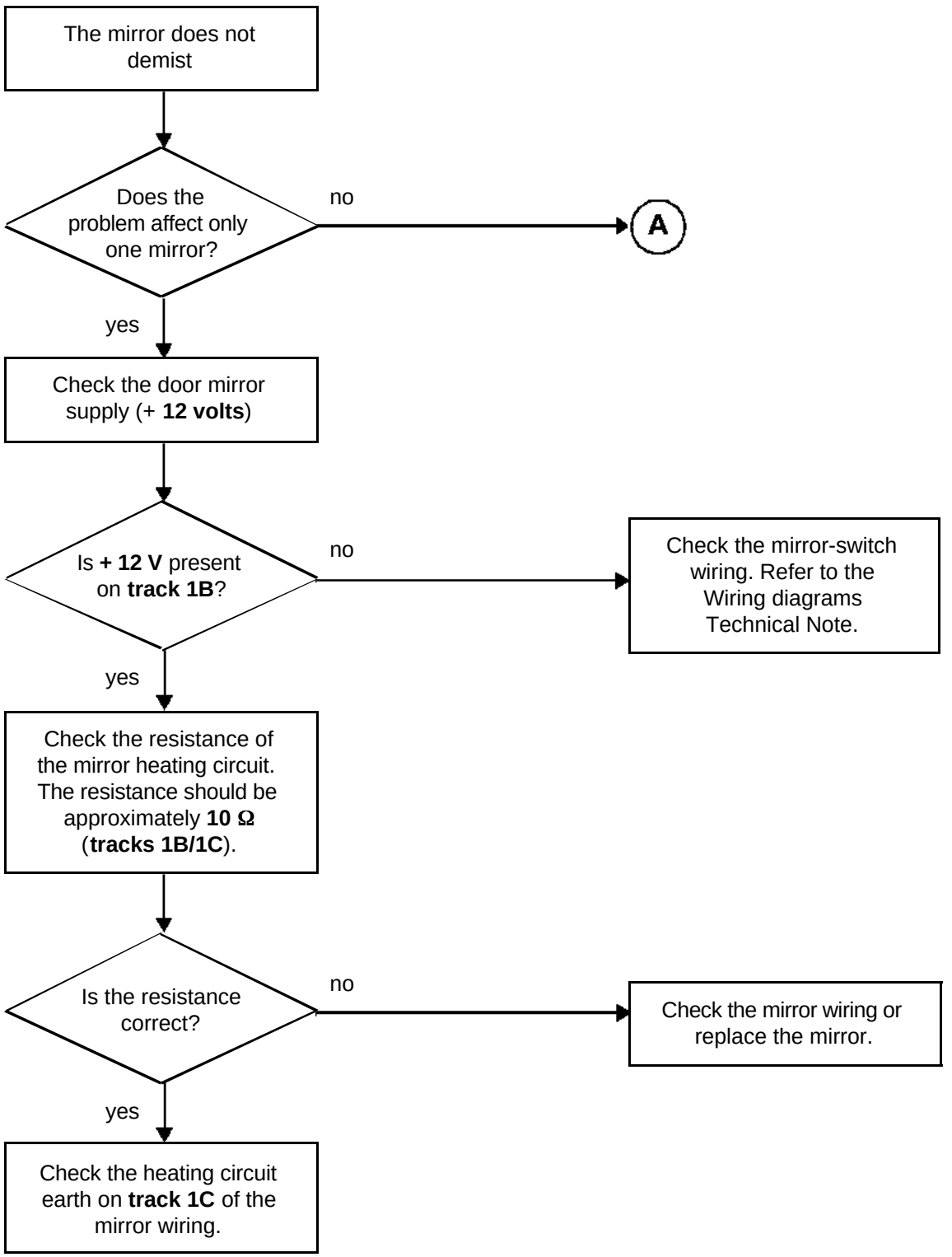

GETtheMANUALS.org

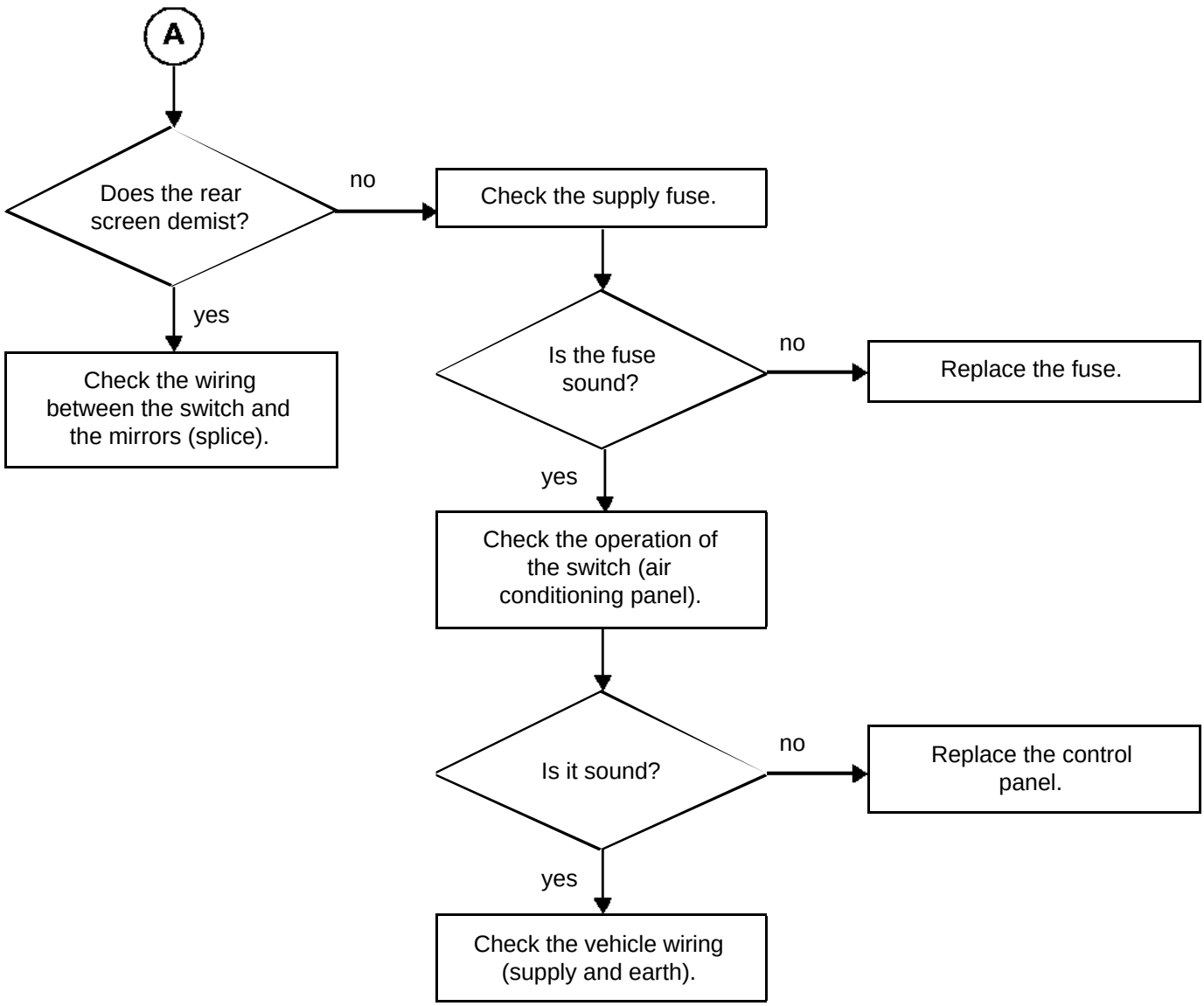

GETtheMANUALS.org

No autodimming function on one or more door mirrors

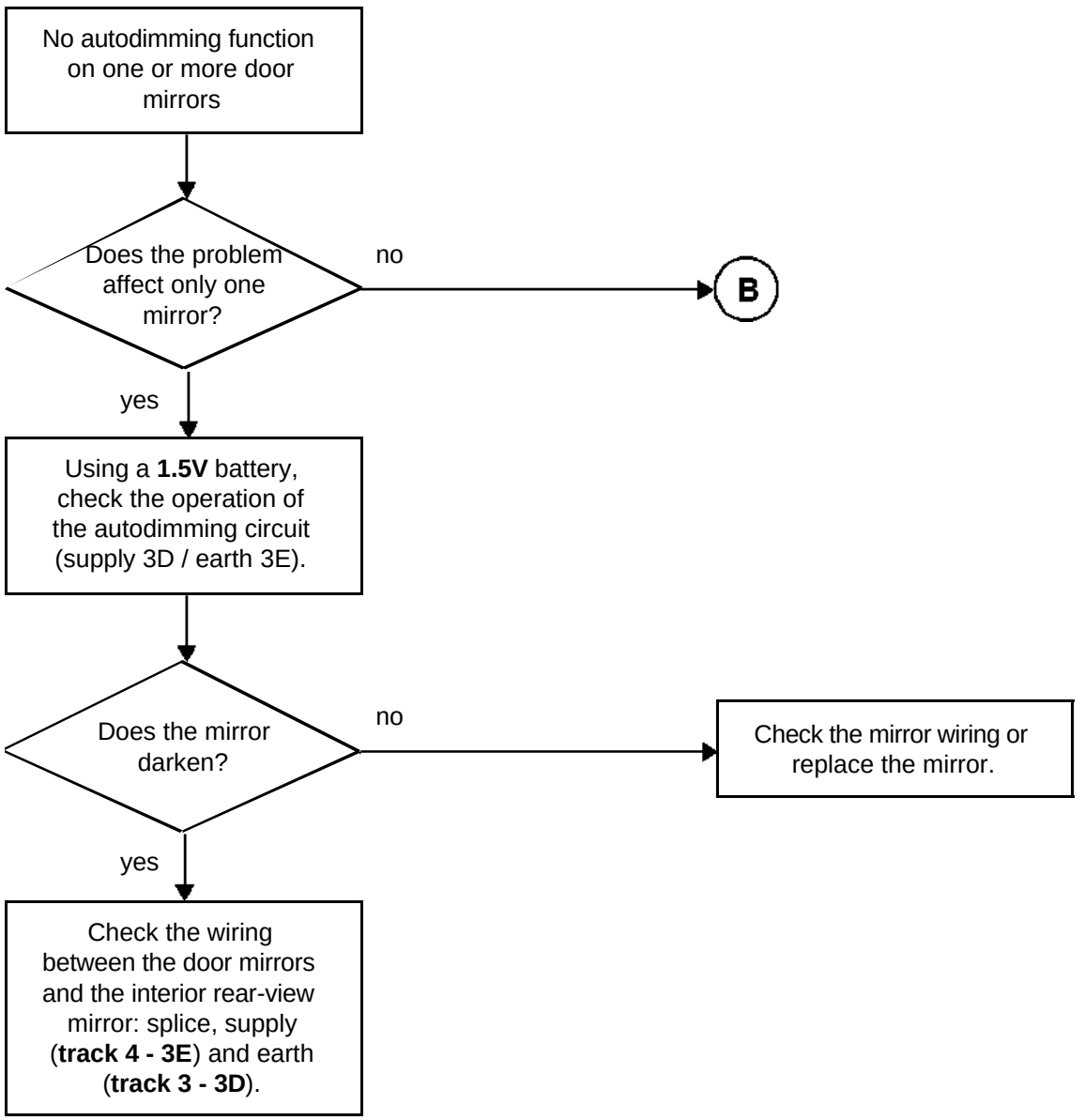

GETtheMANUALS.org

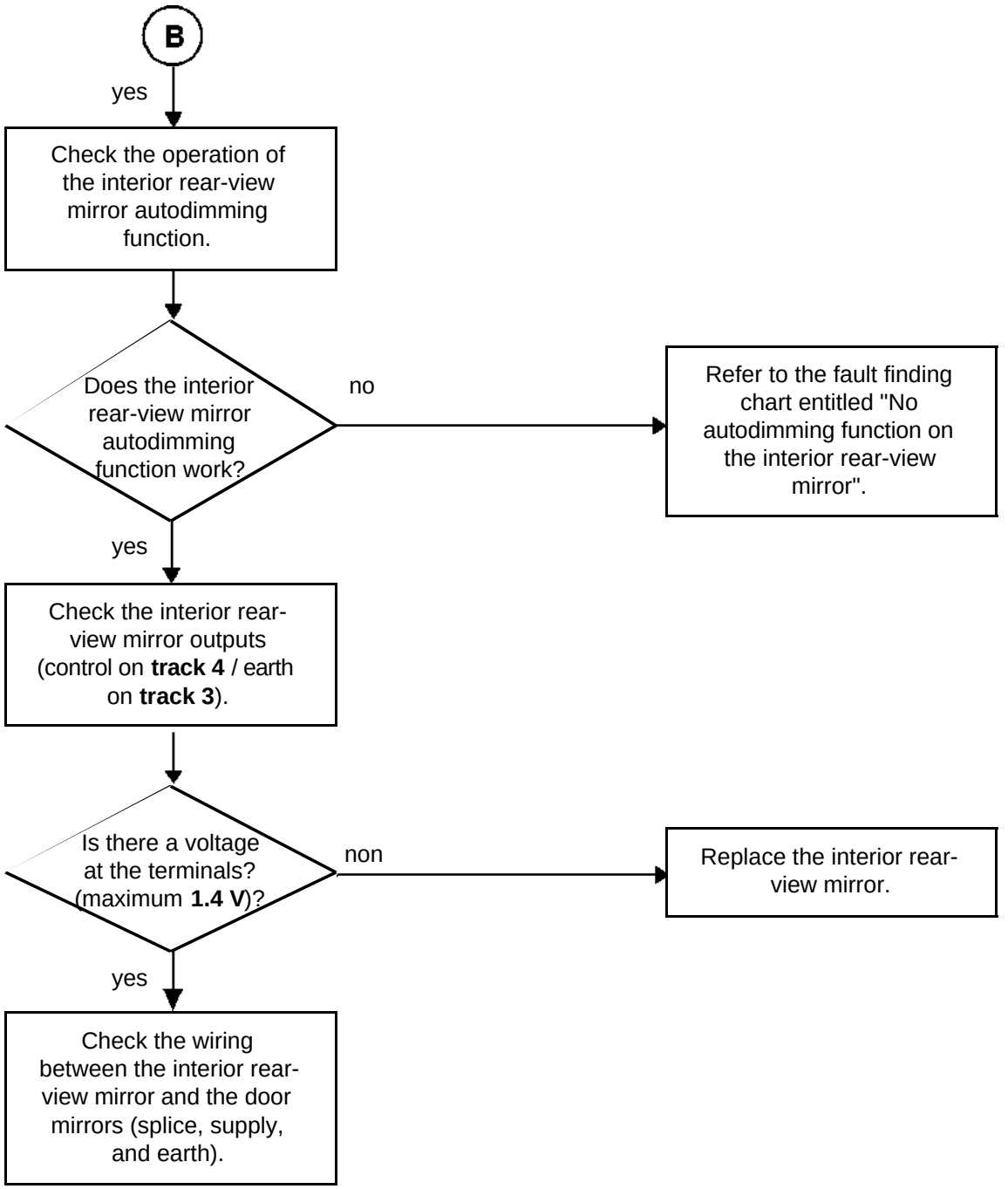

GETtheMANUALS.org

No autodimming function on the interior rear-view mirror

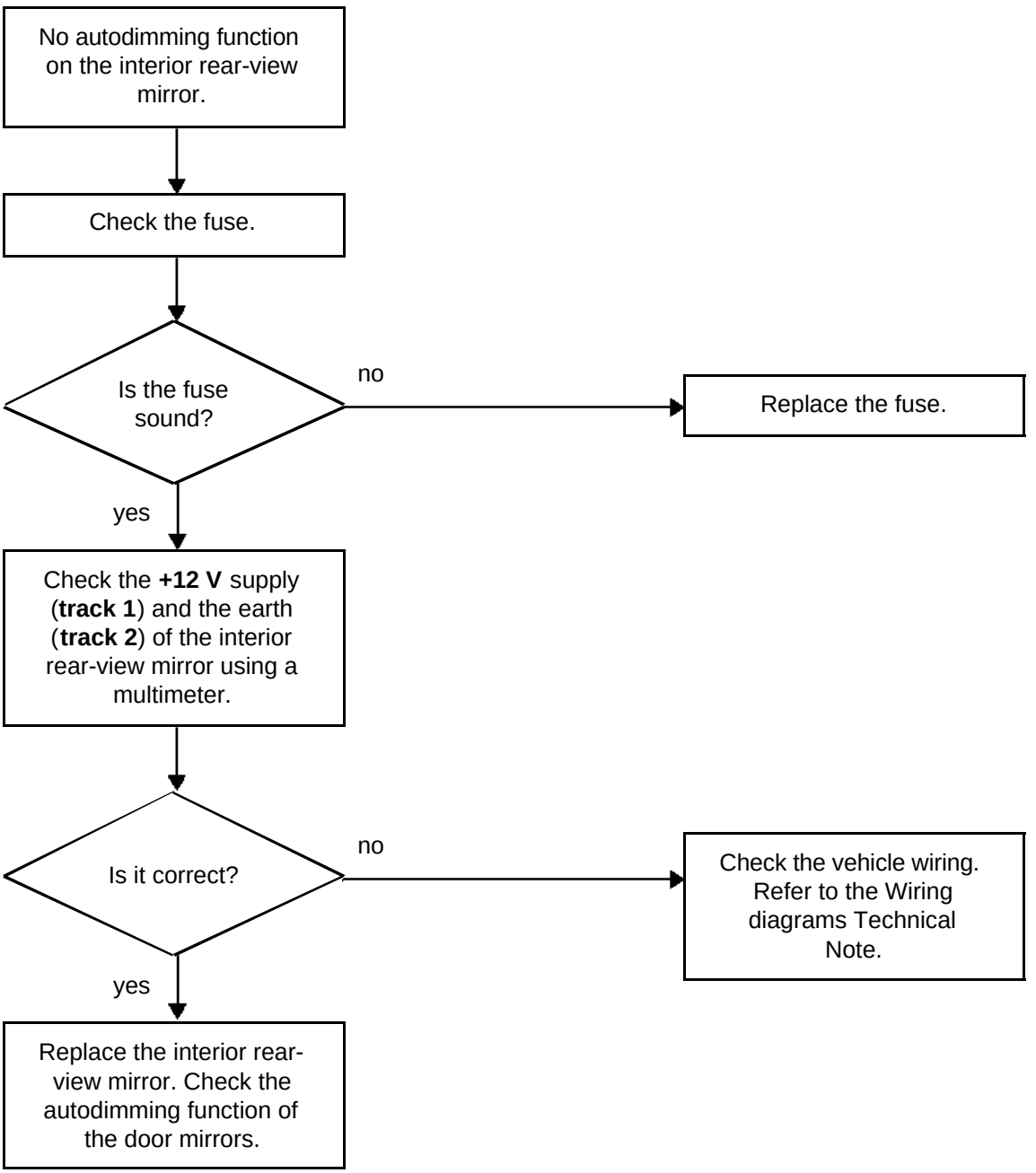

GETtheMANUALS.org

Door mirrors cannot be electrically adjusted

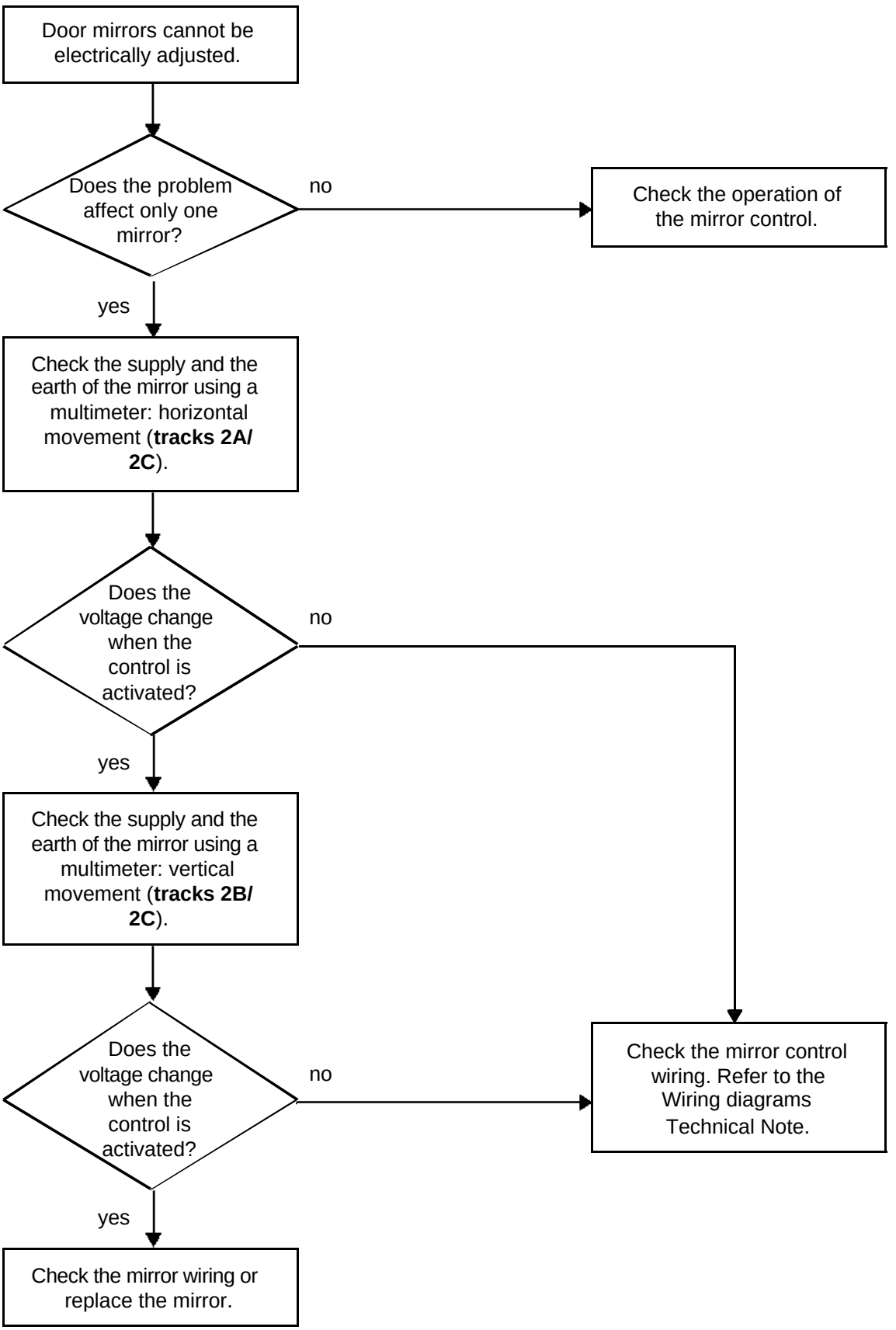

GETtheMANUALS.org

Door mirrors cannot be electrically tilted

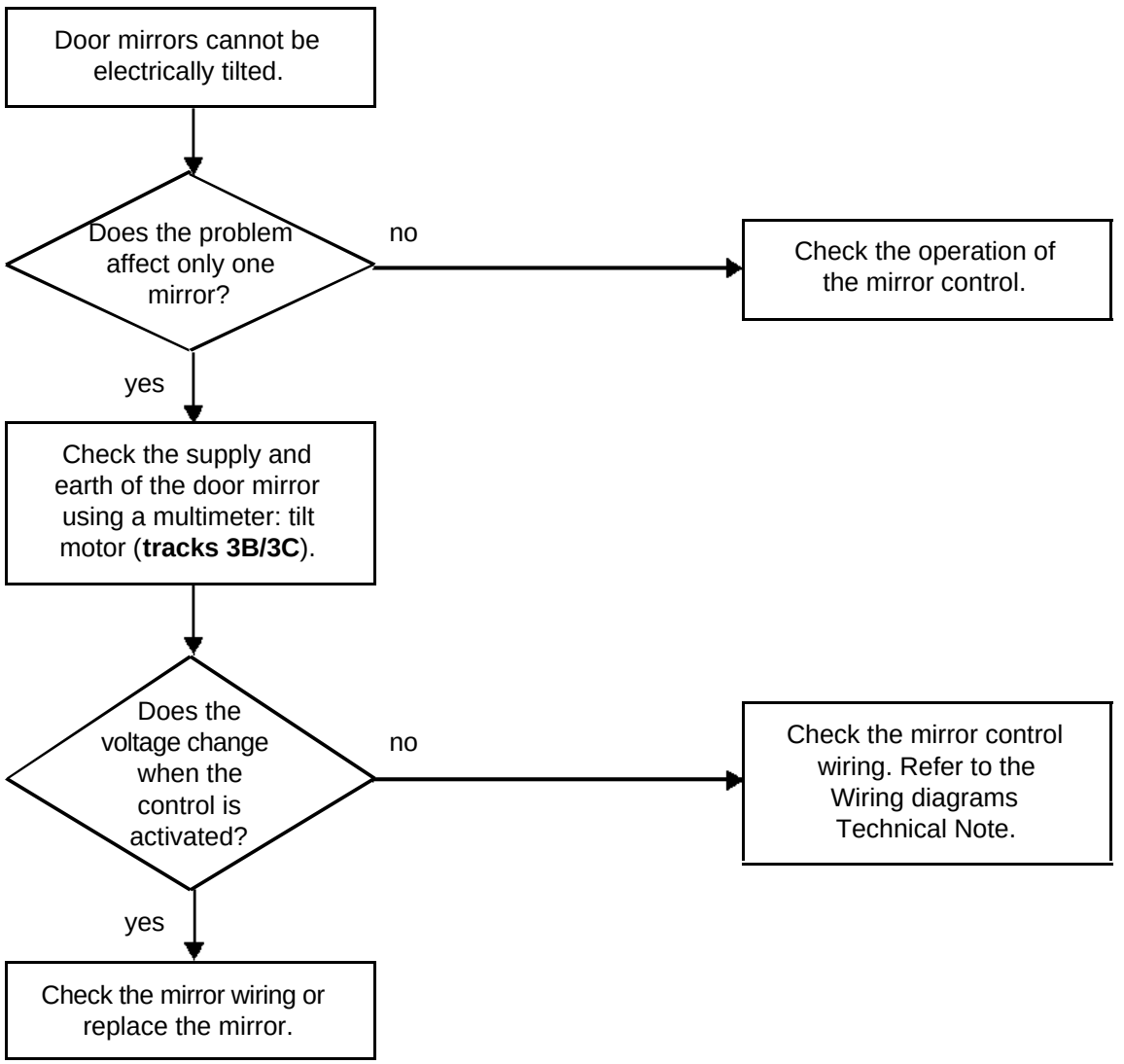

GETtheMANUALS.org

Basic electric door mirror control

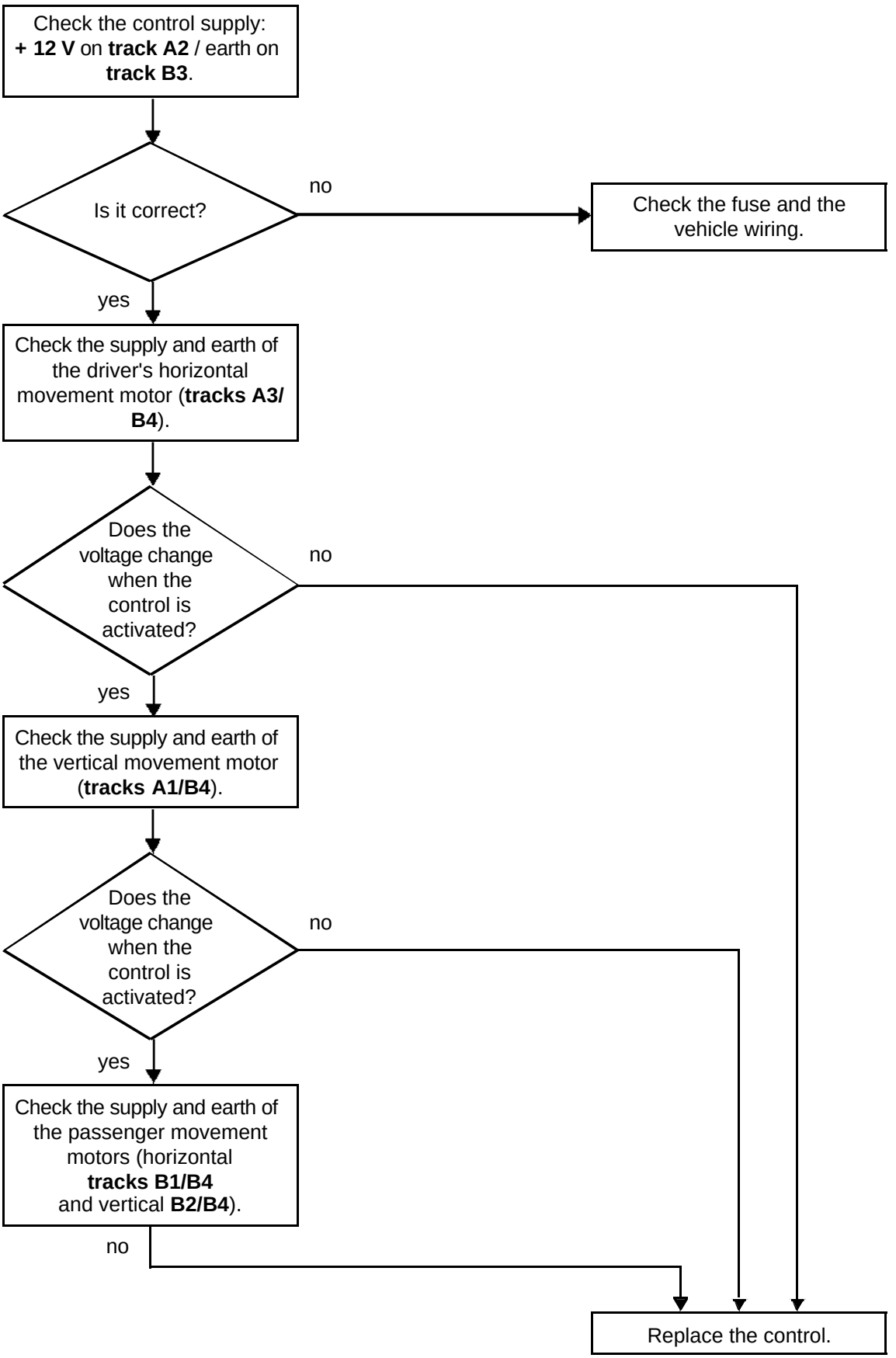

GETtheMANUALS.org

Tilting door mirror control)

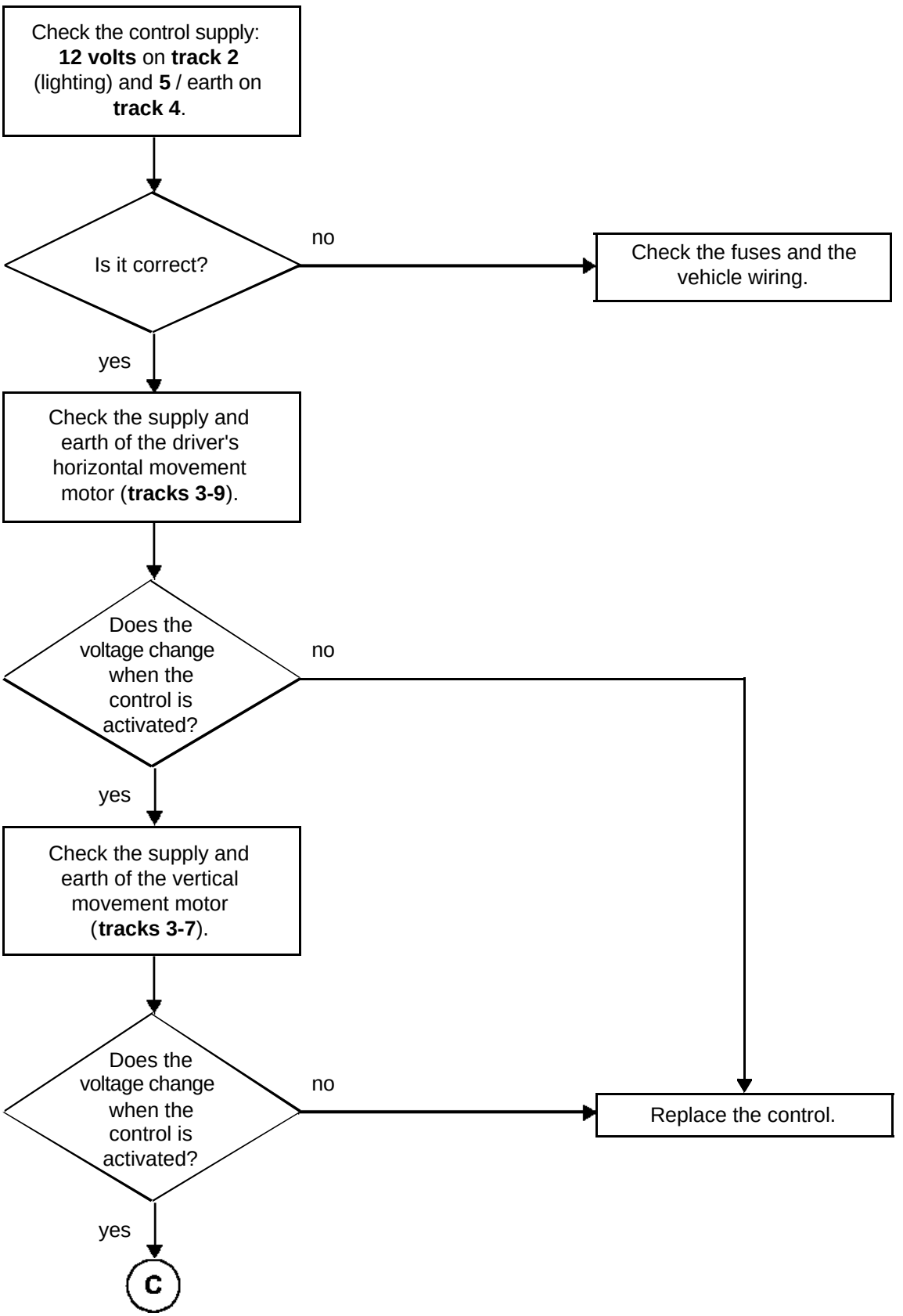

GETtheMANUALS.org

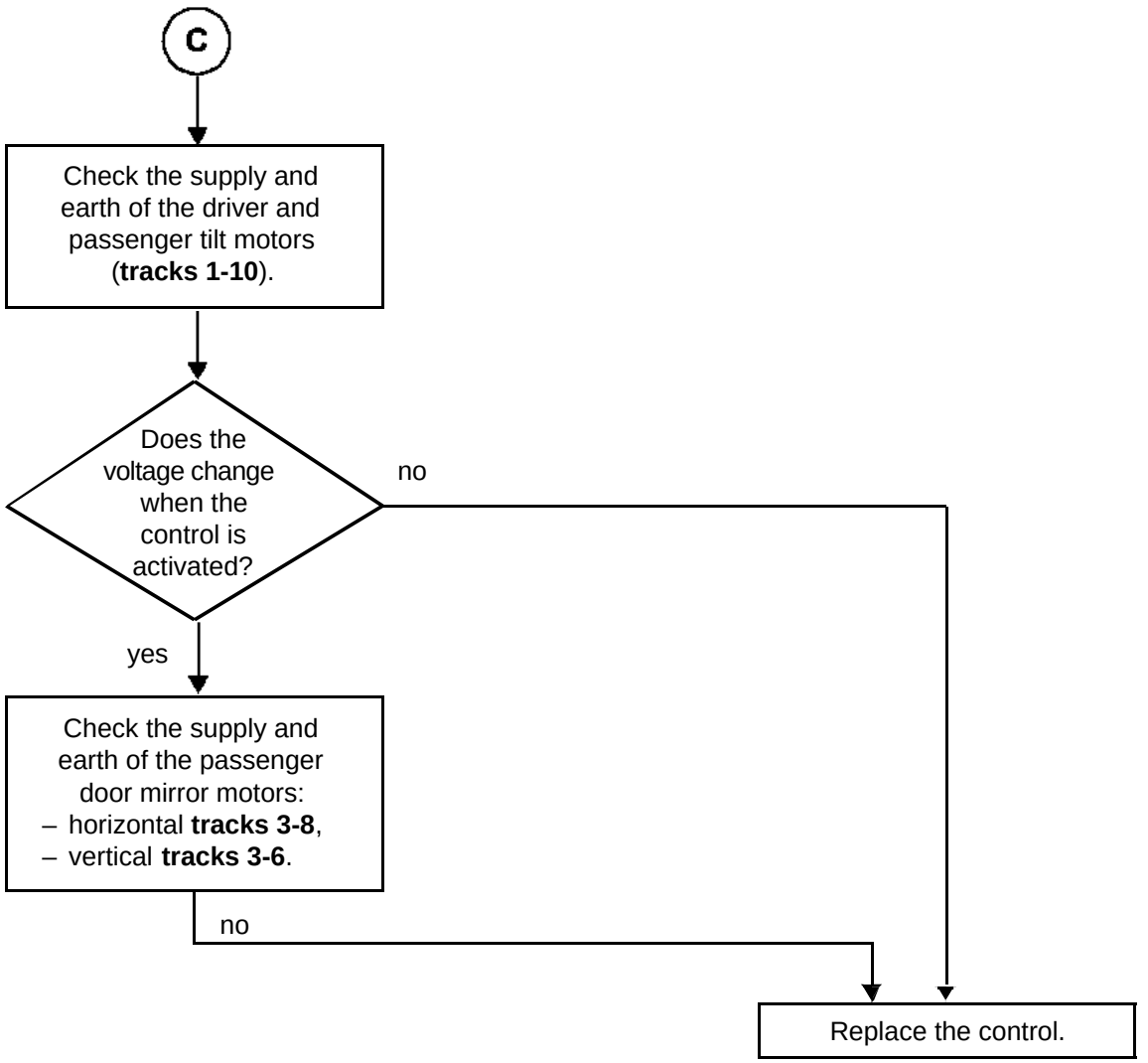

GETtheMANUALS.org

BLADES

These blades consist of:
– a wiper blade (1);
– two metal inserts (2);
– a deflector (3) directed towards the front of the vehicle.

These blades increase the efficiency of wiping and greatly reduce wind noise, even at high speeds.

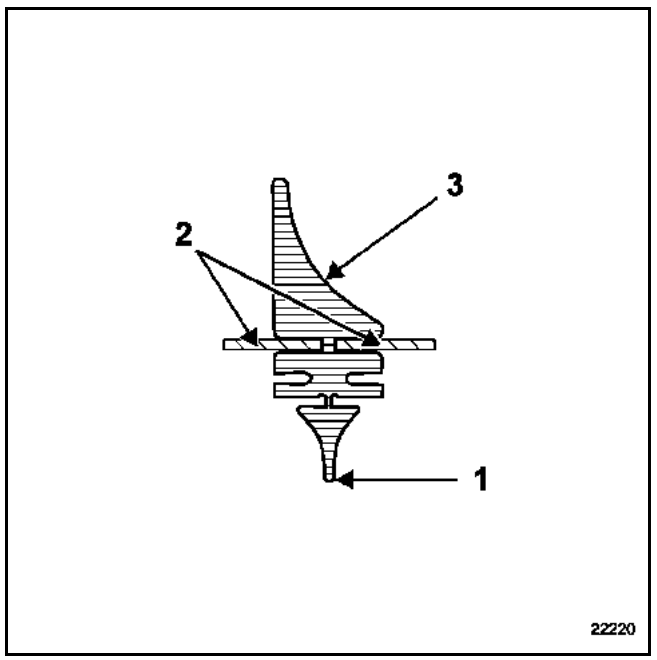

REMOVAL

Raise the windscreen wiper arm.

Unclip the blade (4) from the windscreen wiper arm, so as to swivel the arm (5) as far as the horizontal stop. Then slide the arm (6) so as to release it from its hingepin.

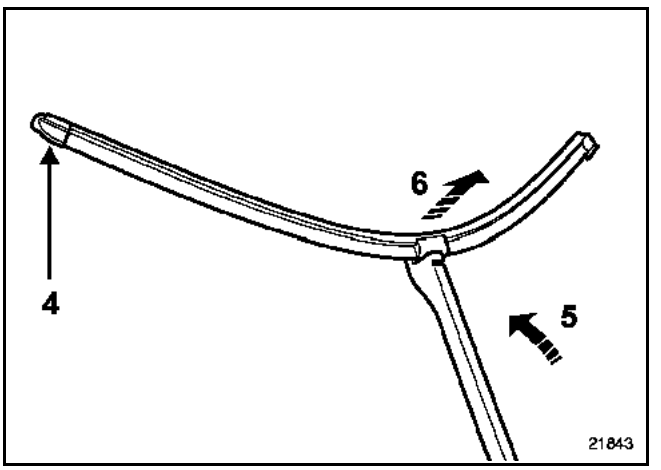

REFITTING

Special notes:
- The upper blade (the largest one) is positioned on the left-hand side of the vehicle;
- The most curved wiper arm is positioned on the left-hand side of the vehicle.

GETtheMANUALS.org

SPECIAL TOOLING REQUIRED	
Elé. 1552	**Tool for removing windscreen wiper arms**

REMOVAL OF THE WIPER MECHANISM WITH MOTOR

The mechanism is identical for all vehicles, both left hand drive and right hand drive.

REMOVING THE MECHANISM

Disconnect:
– the battery,
– the wiper motor.

Remove:
– the wiper arms with the tool **Ele. 1552**,
– the half-grilles of the plenum chamber, on the LH side and then the RH side, by unscrewing mounting bolts (A) and (B) (by a quarter of a turn);

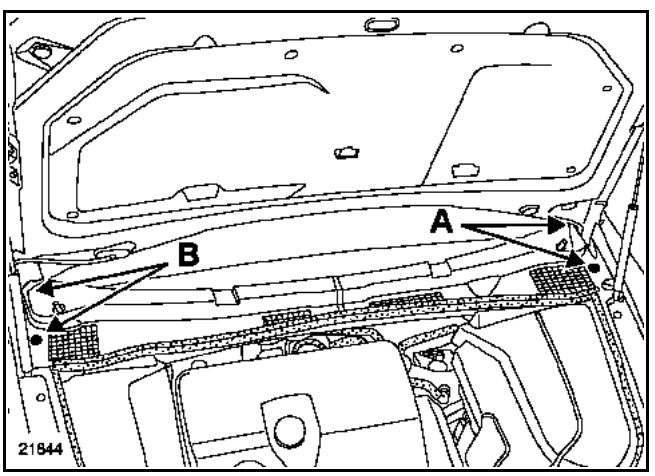

– the bolts (C) attaching the windscreen wiper mechanism.

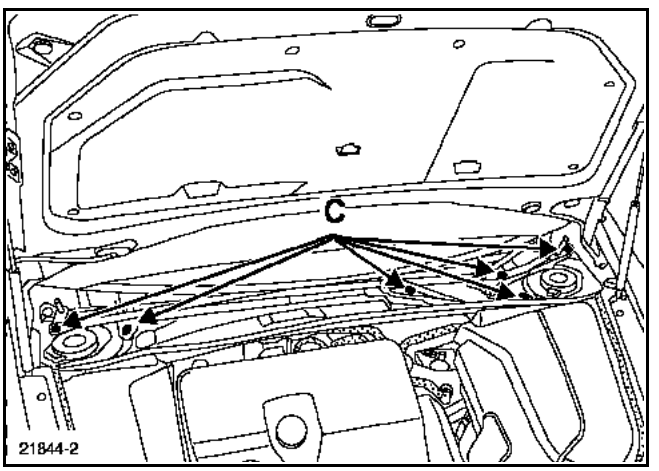

Tilt the mechanism to remove it from its housing.

IMPORTANT: for vehicles equipped with windscreen de-icing, do not damage the feed wires.

GETtheMANUALS.org

Fit the mechanism's linkage onto the drive linkage.

IMPORTANT: it is prohibited to alter the settings of the mechanism; ball joint (3) is adjusted in factory.

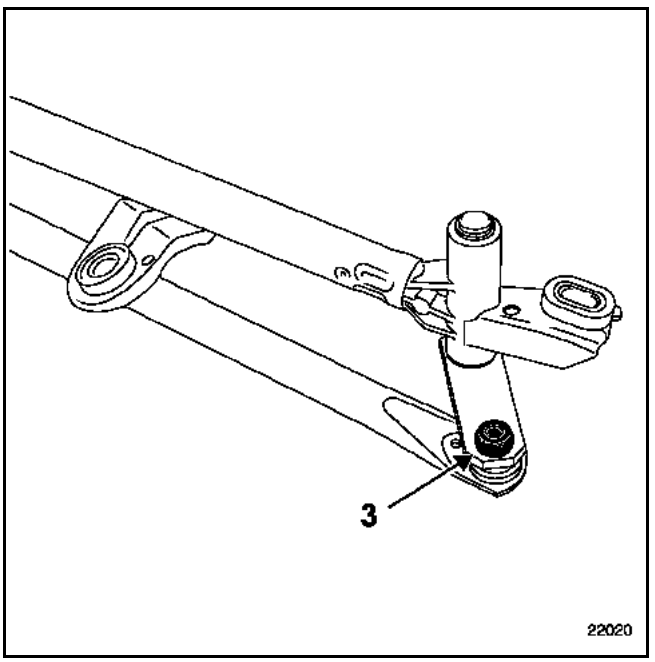

Tilt the mechanism to insert it in position.

Place all the bolts on the mechanism in position.

Tighten bolts (1) and (2) to torque of **0.8 daNm** then the other four bolts to the same torque.

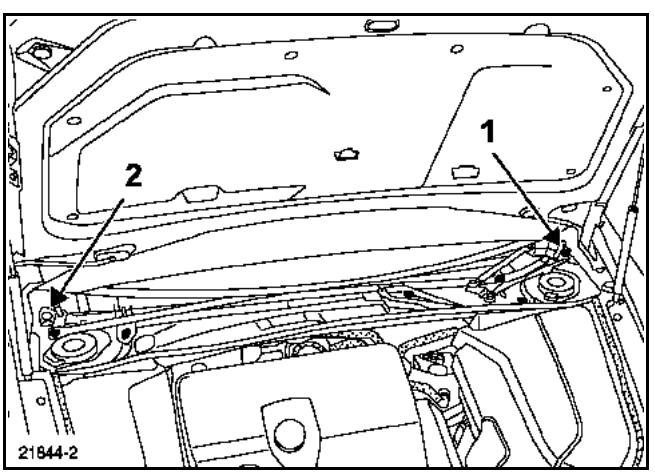

Refit the half-grilles of the plenum chamber (**see bodywork chapter**).

Reconnect:
– the wiper motor connector,
– the battery.

IMPORTANT: before refitting the windscreen wiper arms, it is very important to check once again that the windscreen wiper motor is still positioned in the park position.

Position the lower arm (RH) rlative to the locating point (4) on the windscreen and tighten the nut to a torque of **2 daNm**.

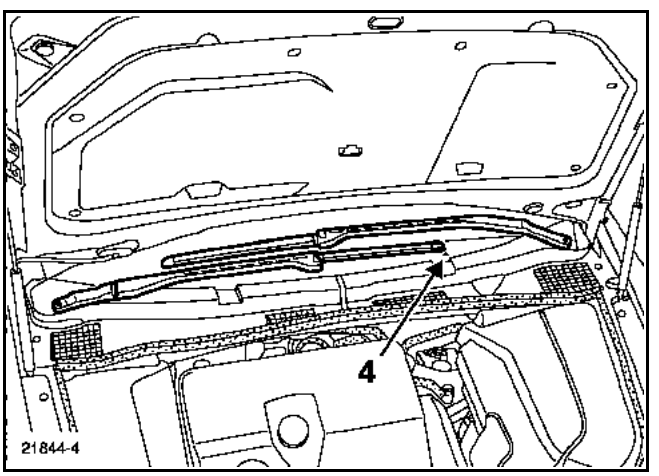

NOTE: to help distinguish between the two windscreen wiper arms, that on the left is the most curved.

Fit:
– the upper arm (LH) parallel to the lower arm and tighten the nut to a suitable torque;
– the nut covers.

IMPORTANT: after connectingthe battery, make sure to carry out the necessary programming (set the clock time, enter the radio code, etc.) so that the vehicle may operate correctly (see **Chapter 80A**).

GETtheMANUALS.org

CONNECTION

The motor connection is the same on left-hand and right-hand drive versions.

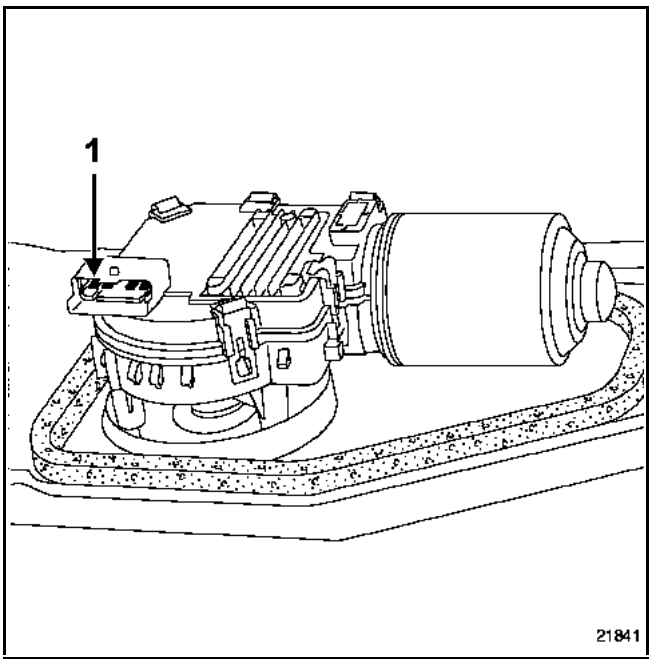

Track	Description
1	+ Battery feed
2	Earth
3	Not used
4	+ After ignition feed
5	Control signal coming from the rain sensor or the UCH

GETtheMANUALS.org

RAIN DETECTOR

OPERATION

The UCH collects the information supplied by the rain sensor. It thus enables automatic operation of the wipers and control of wiping speed in accordance with the quantity of water on the windscreen.

To activate this function, position the wiper stalk in intermittent position. Any movement of the wiper stalk cancels this function.

SPECIAL NOTES:

- If the wiper arms are subjected to too great a force (e.g., high-speed operation), the UCH automatically switches to a lower speed.
- In the event of the windscreen wiper mechanism's motor becoming locked (e.g., if the windscreen freezes over), the UCH automatically cuts of the motor's poewr supply.

IMPORTANT: the wiper blades must be regularly replaced for the rain sensor to work properly.

GETtheMANUALS.org

OPERATING DIAGRAM

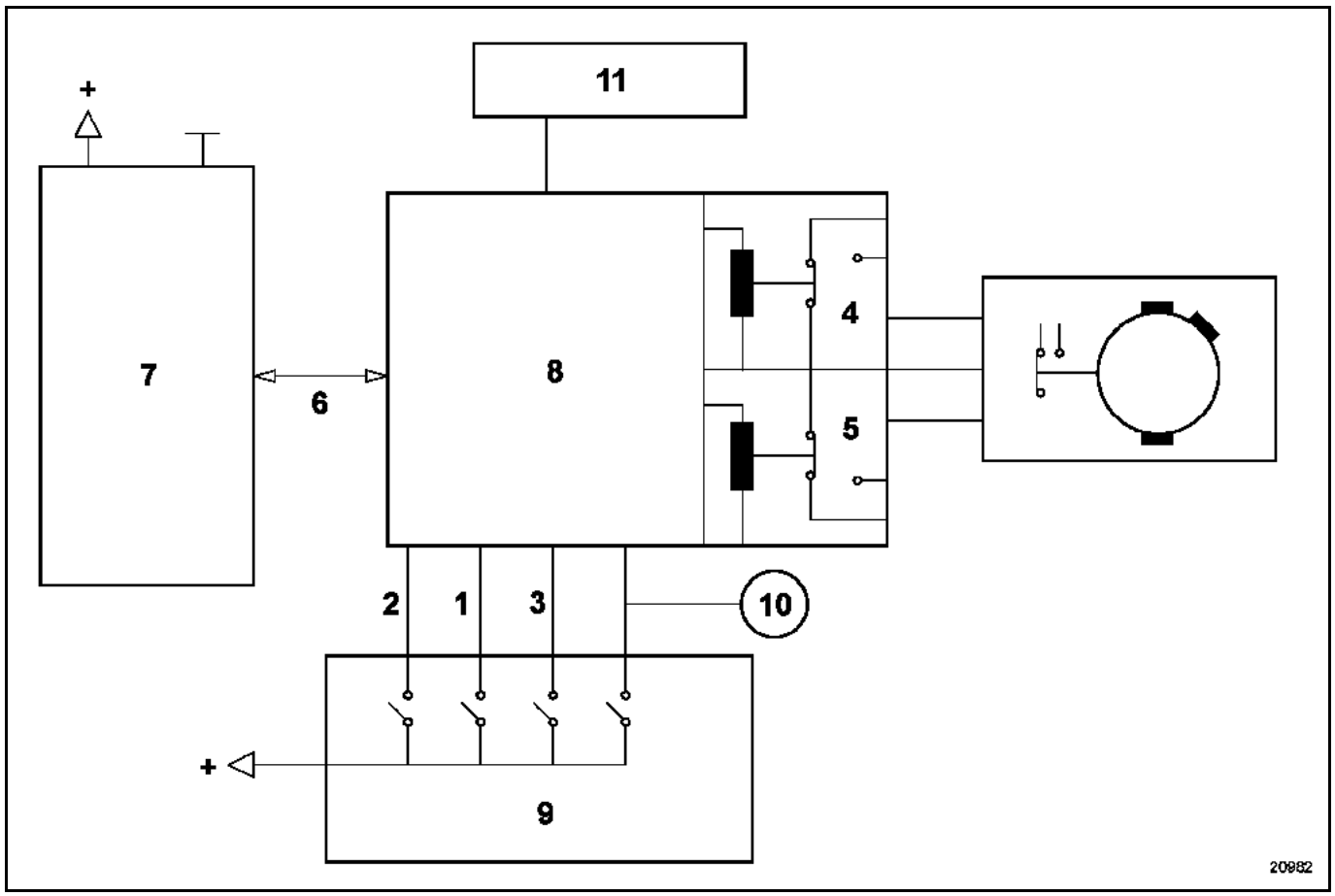

List of components

1 High speed supply
2 Low speed supply
3 Automatic wipers supply
4 Automatic wipers ON/OFF relay
5 High speed/low speed relay
6 Rain sensor signal
7 Rain detector
8 UCH
9 Wiper control switch
10 Windscreen washer pump
11 Headlights

GETtheMANUALS.org

REMOVAL

Remove the interior rear-view mirror cover (see **Bodywork** chapter).

Unclip the two side clips (1) from the sensor using a small screwdriver.

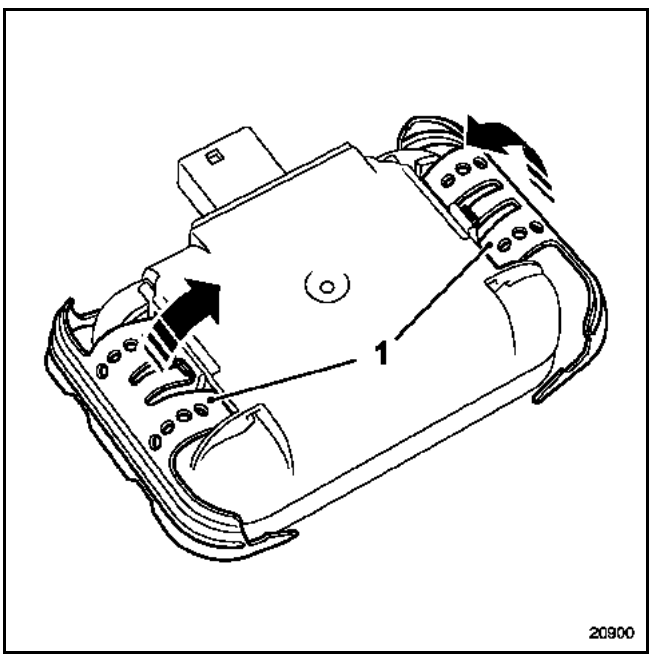

Disconnect the connector.

WARNING: do not touch the light sensor. Fit it on the vehicle as soon as it is removed from its packaging.

REFITTING

Clean the contact surface between the windscreen and the rain detector.

Place the sensor on the mounting and pull back the clips.

Reconnect the connector and put back the rear-view mirror cover.

CONNECTION

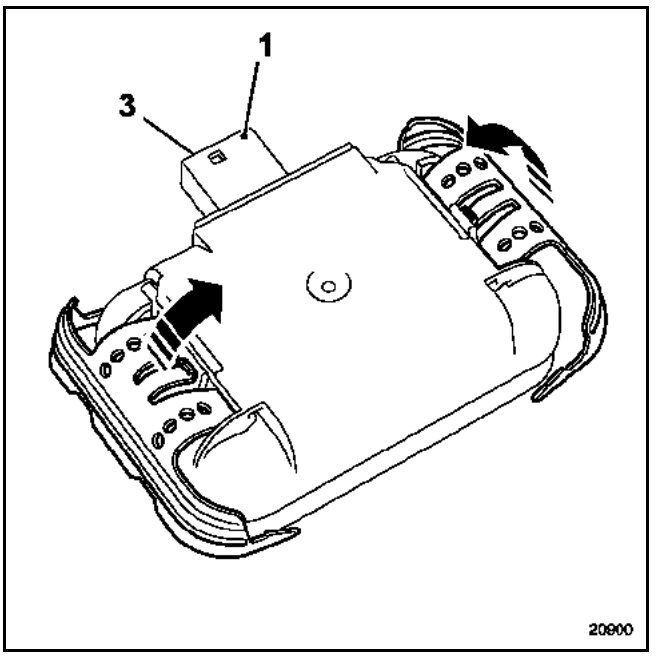

Track	Description
1	+ Battery supply
2	Earth
3	Connection between UCH and wiper motor

GETtheMANUALS.org

SPECIAL TOOLING REQUIRED	
Elé. 1552	Tool for removing windscreen wiper arms

OPERATION

In normal operation, the rear screen wiper works intermittently.

When the windscreen wipers are switched on, the rear wipers are also switched on automatically when reverse gear is selected.

REMOVAL

Unclip the battery.

Remove:
– the nut cover, passing a finger under the windscreen wiper arm to press on catch (1);
– the mounting nut and the windscreen wiper arm, using tool **Elé. 1552**,

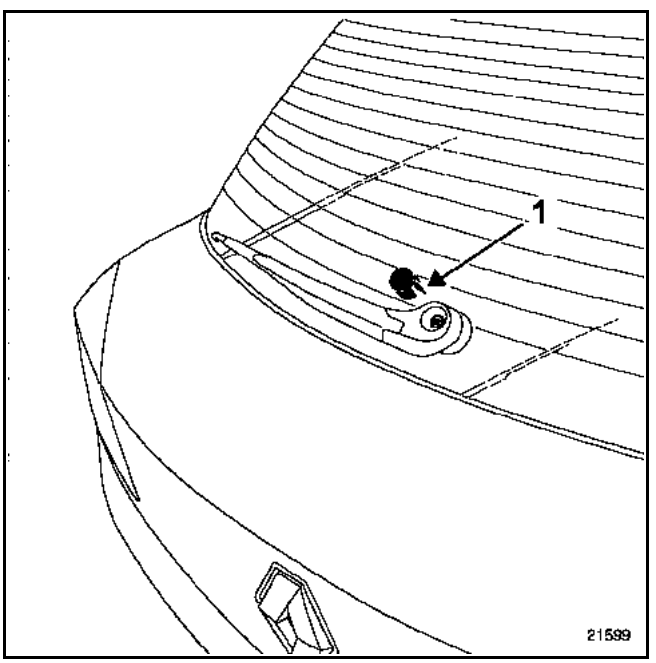

– the boot trim (see **bodywork chapter**);
– the wiper motor mounting bolts. Disconnect the motor.

REFITTING - Special notes

IMPORTANT: Seal (2) must be replaced after each time the motor has been removed.

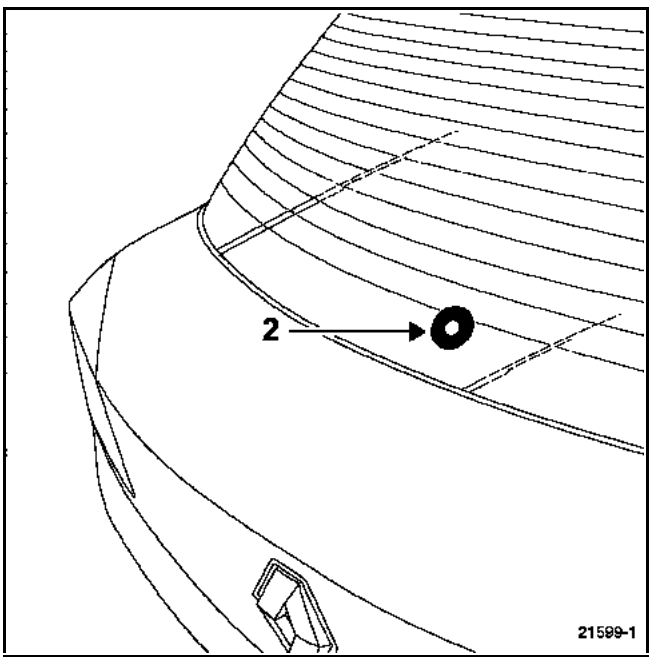

After setting the motor to a torque of **0.8 daNm**, check that the motor is set in the park position.

Clean the motor shaft splines.

Place the windscreen wiper arm in rest position with a new nut and tighten the nut to a torque of **1.2 daNm**.

GETtheMANUALS.org

CONNECTION

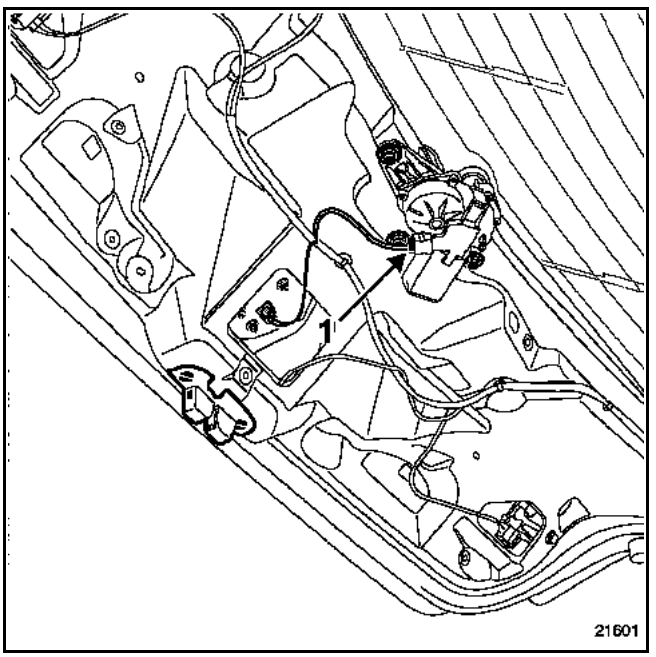

Track	Description
1	+ Control
2	Park position information for the UCH
3	Earth

GETtheMANUALS.org

OPERATION

This vehicle is fitted with a bidirectional electric pump which feeds fluid from the same reservoir to both the windscreen and rear screen washers according to the electrical supply to the **two track** connector.

The windscreen and rear screen washers are controlled from the wiper stalk.

There are two scenarios:

- when the pipes are fed via the socket (A), the windscreen washer operates.

Track	Description
1	Power supply
2	Earth

- when the pipes are fed via the socket (B), the rear screen washer operates.

Track	Description
1	Earth
2	Power supply

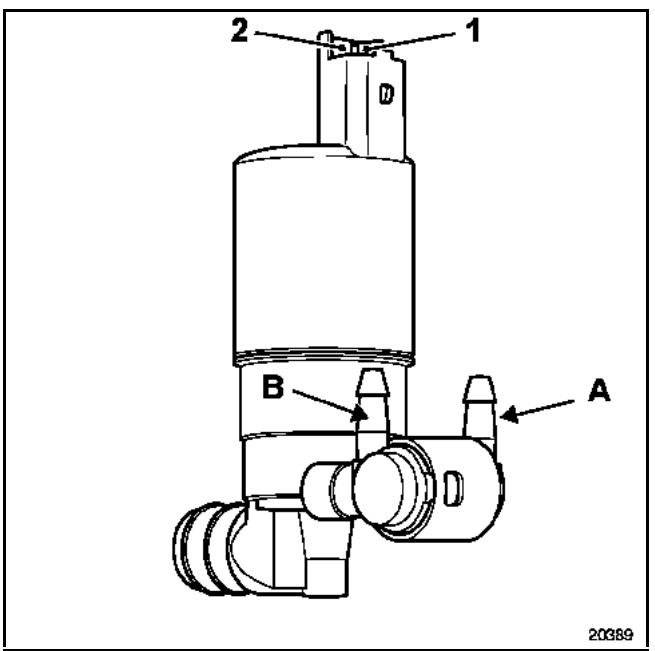

REMOVING/REFITTING THE PUMP

To obtain access to the washer pump, the front bumper must be removed (see **bodywork chapter**).

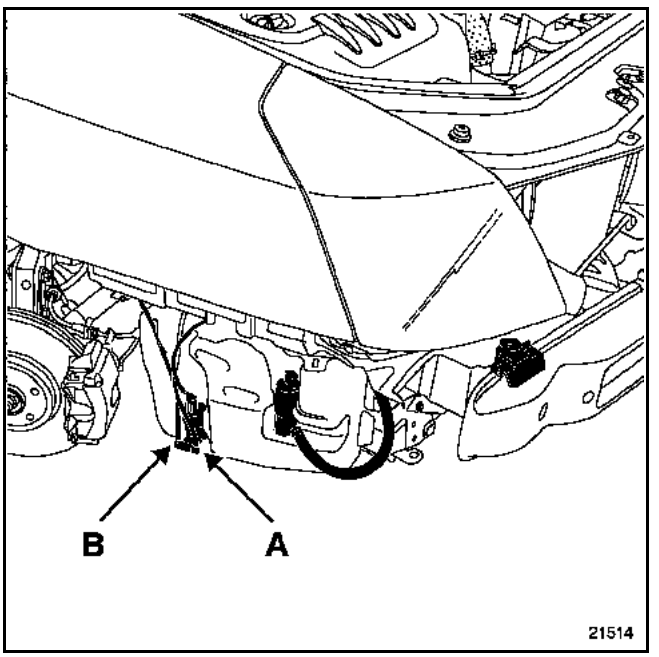

When removing the washer pump, mark the two pipes before disconnecting them.

NOTE: some models, such as cold climate cars, are fitted with electric heating air vents.

GETtheMANUALS.org

SPECIAL NOTES

The headlight washer pump (1) is supplied via the UCH when the windscreen washer and the main beam headlights or dipped beam lights are switched on.

The electric pump for the headlight washers is located next to the windscreen washer pump (2).

The front bumper must be removed in order to remove the pumps.

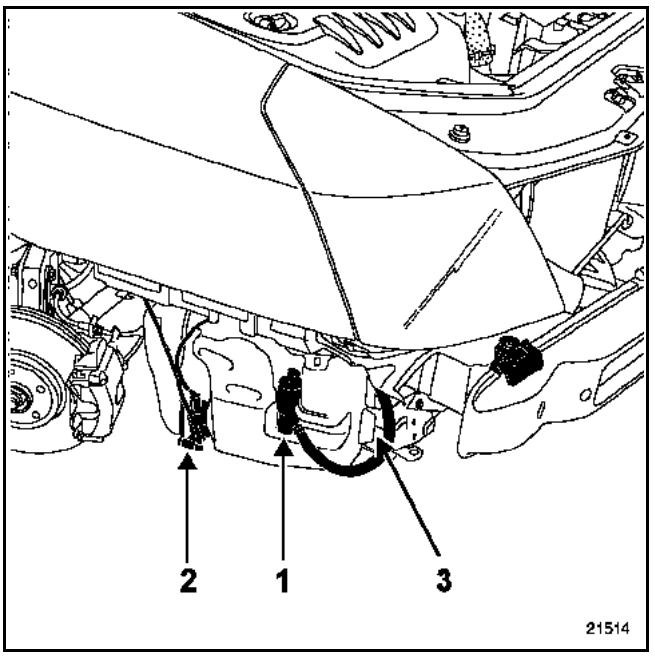

CONNECTOR ALLOCATIONS

Track	Description
1	Power supply
2	Earth

NOTA: only vehicles fitted headlight washers have a fluid level sensor (3).

REMOVAL/REFITTING

The headlight washers comprise two parts:
- a visible part including the jets;
- a section behind the front bumper.

To remove the jets alone, the rigid fuel supply pipe (4) must be clamped with a vice and a rag (to protect the bumper paint) in order to remove holding clip (5).

The front bumper must be removed in order to remove the lower section.

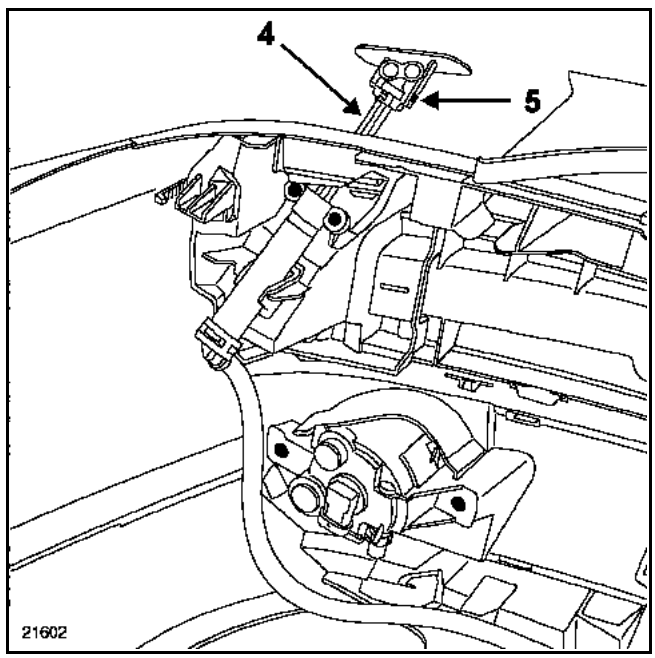

GETtheMANUALS.org

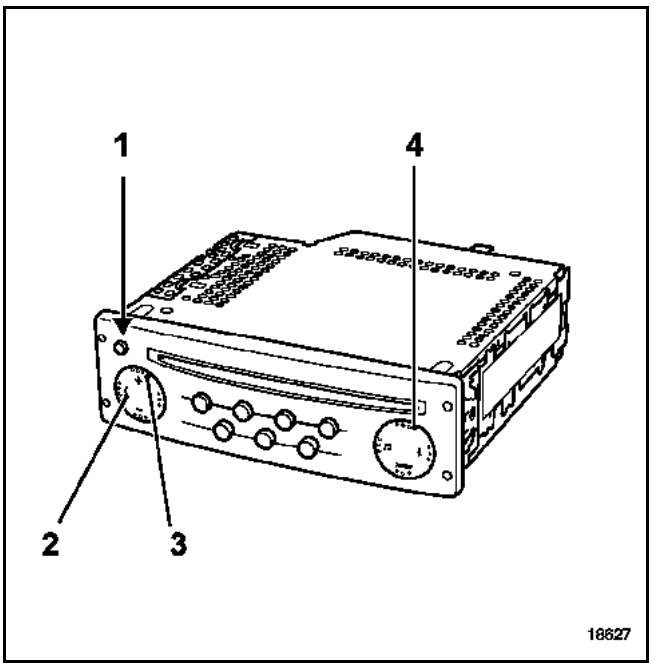

1 on/off
2 < and > buttons are used to change the configuration and access menus
3 + and - buttons alter the settings
4 "**source**" button

The radio features allow you to:
– listen to the radio (four geographical zones can be programmed for FM radio)
– display the name of the station using RDS which automatically switches to the best transmitter (AF function),
– receive traffic news ("I Traffic" function),
– receive news flashes and emergency bulletins ("I News" function).
– receive public safety emergency bulletins ("PTY 31").

RADIO FUNCTION

REMINDER: four geographical zones can be programmed for the radio.

The Tuner has three selection modes visible on the screen and accessible from the radio front panel:
– manual mode (MANU),
– preset mode (PRESET),
– alphabetical mode (LIST).

CD FUNCTION (SINGLE DISC)

The CD player can play conventional discs and any audio tracks on a CD-ROM.

CDs can be played in order or tracks can be chosen at random.

NOTE: when a CD changer is being used, tracks from one disc only are played at random.

HEAT SHIELD

If the radio temperature is too high for it to function properly, the volume is automatically reduced (without changing the volume shown in the display).

Should one of the speaker tracks short circuit, the supply to the amplifier will be cut off.

GETtheMANUALS.org

CODED PROTECTION

The radio is protected by a four digit code. This code must be entered via the control planet wheel or the radio keypad each time the battery is disconnected.

Entering the code with the control on the steering wheel:
press the bottom button on the control to confirm an entry.

If the code is entered incorrectly, the radio will be locked (1 minute for the first mistake, 2 minutes for the second mistake, 4 minutes for the third mistake etc.).

Some settings must be made after the code has been entered for the first time (see "**configuration**" section). These settings are stored when the battery is disconnected.

NOTE: if there is a configuration error, you can retum to scrambled mode by pressing the **2** and **5** buttons at the same time as switching the power on. Then wait 2 minutes.

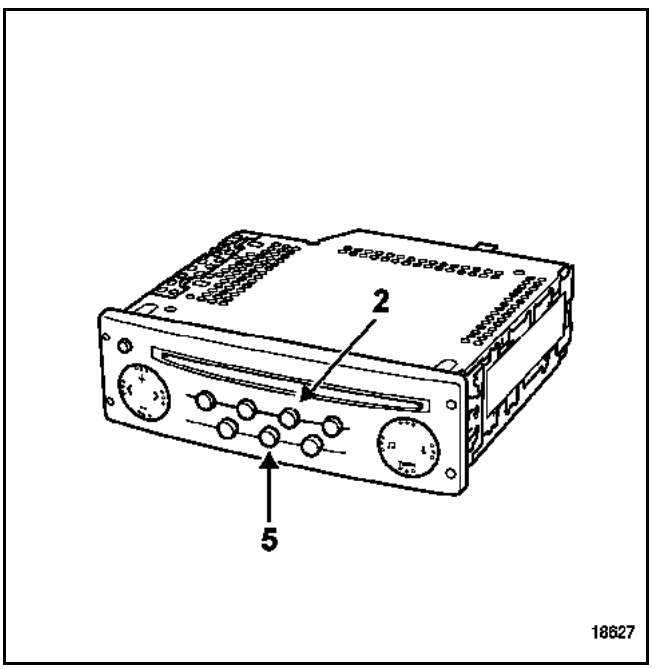

CONFIGURATION

NOTE: to select the zone in which the radio is to be used, press the **2** and **5** buttons while switching the power on. Then wait approximately 2 minutes. Enter the four digit code and then:

- select the tone curve appropriate for the vehicle
  - 0: no regulation
  - 1: Twingo
  - 2: Clio
  - 3: Megane
  - 4: Laguna
  - 5: Vel Satis

- Select the relevant zone:
  - **America**
  - **Japan**
  - **Asia**
  - **Arabia**
  - **Others** (Europe, Africa, other)

- configuration of the rear speakers: "REAR ON/OFF"

NOTE: these configurations are not required when the secret code is entered after the power supply has been cut.

"EXPERT" MODE

To move to configuration mode ("**Expert**" mode), press and hold the "**source**" key for about four seconds until you hear a bleep. This allows you to adjust the following functions:

- **AF** mode activation (automatic retuning),
- vehicle speed-dependent volume (**5** for maximum change, **0** for no change),
- activation of **Loudness** mode,
- activation of **Assisted tuner** mode
- configuration of the number of **speakers** (2 or 4),
- selection of manual or dynamic list.

NOTE: pressing the source button when entering the configurations cancels the changes.

GETtheMANUALS.org

CONFIGURATIONS

Configuration is required after the security code has been entered for the first time or after buttons "**2**", "**5**" and "**radio ON**" have been pressed. Wait approximately 2 minutes then enter the security code.

↓

Select the appropriate tone curve for the vehicle model:

0: no regulation
1: Twingo
2: Clio
3: Megane
4: Laguna
5: Vel Satis

↓

Confirm by pressing and holding the lower button on the steering wheel control.

↓

Select the geographical zone for tuner operation:
– **Others** (Europe, Africa, other)
– **America**
– **Japan**
– **Asia**
– **Arabia**

↓

Configuration of the rear speakers:
"**REAR ON/OFF**"

SETTINGS

Press and hold the "**Source**" button to modify parameters.

↓

Activate or deactivate monitoring of automatic resynchronisation of stations (RDS): **AF ON/ OFF** using the "+" and "-" buttons.

↓

Scroll to the next parameter using the tumble wheel or the ↑ and ↓ buttons.

↓

Select the curve for speed-dependent volume control then confirm:
– **SPEED 0:** no regulation.
– **SPEED 5:** maximum regulation.

↓

Activate or deactivate the "**Loudness**" function:
LOUD ON/OFF.

↓

Select the Tuner operating mode:
TUNE MAN/AUTO

↓

Configure the use of rear speakers:
REAR ON/OFF

↓

Configure the list update:
"**LIST MAN/DYN**"

GETtheMANUALS.org

VOLUME CONTROL

The volume can be increased according to the vehicle speed. To operate this function:
select the desired volume adjustment curve by using the "**expert**" mode (press and hold the "**source**" button until a bleep is heard): **5** for maximum increase, **0** to suppress the increase.

NOTE: check that the radio is correctly wired to ensure that this function is operational.

NOTE: the radio is equipped with tone modification according to the vehicle. To change vehicle type, refer to the "**Configuration**" section.

SELF-DIAGNOSTIC MODE

The self-diagnostic mode checks some of the main functions:

- **testing the speakers**
  the speakers are fed one at a time if you press buttons **2** and **4** simultaneously. This is confirmed by the display. Compare the sounds from each speaker.

- **testing the reception level (after display of the frequency)**
  The display shows the radio reception information if you press buttons **1** and **6** simultaneously:
  – 9 or letter: good reception
  – lower than 3: poor signal
  – if 2: total loss of stereo

GETtheMANUALS.org

CONNECTOR ALLOCATIONS

Black connector (A)

Track	Description
1	Vehicle speed signal
2	Not used
3	Voice synthesiser signal (mute)
4	Battery supply
5	Aerial/display amplifier supply
6	Light supply
7	Accessories supply
8	Earth

Yellow connector (B)

Track	Description
1	Display connection (track 13)
2	Display connection (track 14)
3	Display connection (track 15)
4	Not used
5	Radio-display on signal
6	Earth shielding

NOTE: if the vehicle is fitted with a navigation system, refer to **section 83C "Navigation assistance"**.

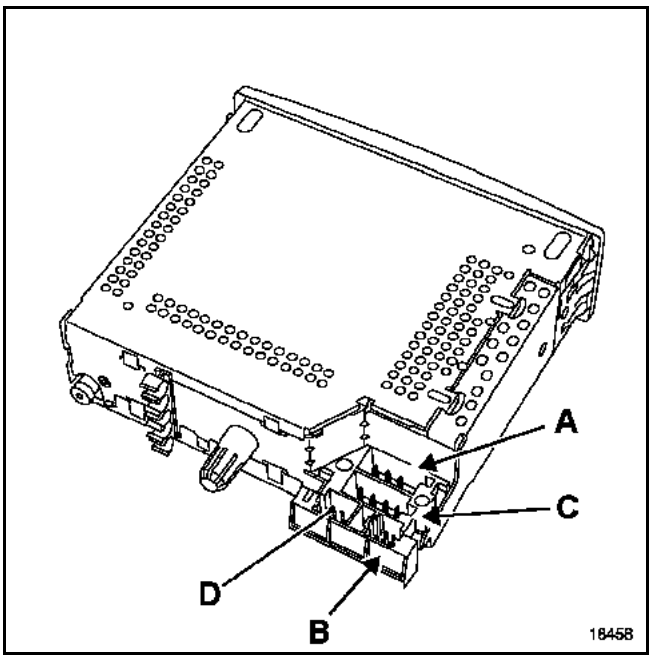

Black connector (C)

Track	Description
1	+ Right rear speaker
2	- Right rear speaker
3	+ Right front speaker
4	- Right front speaker
5	+ Left front speaker
6	- Left front speaker
7	+ Left rear speaker
8	- Left rear speaker

NOTE: the speakers are connected in parallel on each output.

Connector (D) is used to connect to a CD changer (depending on the version).

GETtheMANUALS.org

CONNECTOR ALLOCATIONS

Grey connector (15-track)

Track	Description
1	External temperature signal
2	External temperature earth
3	Not used
4	Not used
5	Earth
6	Lighting
7	Lighting dimmer
8	+ accessories feed
9	+ battery
10	External temperature output
11	Earth (radio track 6)
12	Radio on signal (radio track 5)
13	Radio connection (track 1)
14	Radio connection (track 2)
15	Radio connection (track 3)

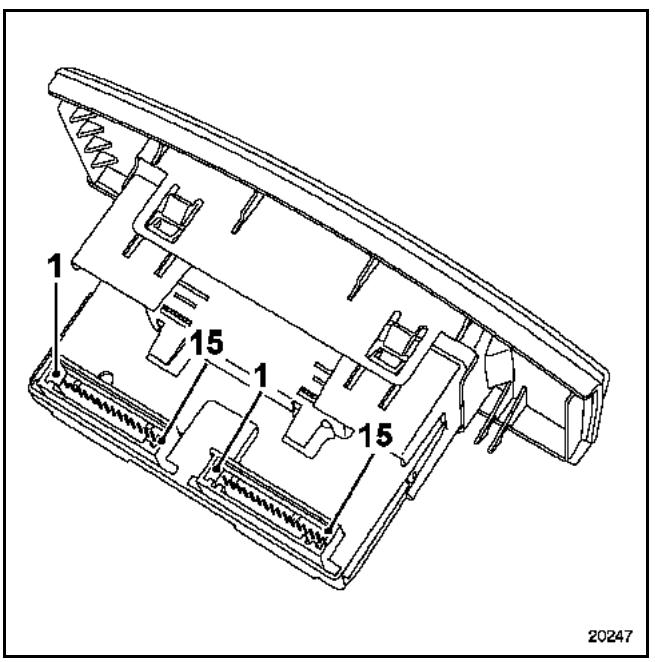

Red connector (15-track)

Track	Description
1	Not used
2	Not used
3	Not used
4	Not used
5	Not used
6	Not used
7	Not used
8	Not used
9	Radio control connection (track B1)
10	Radio control connection (track A3)
11	Radio control connection (track B2)
12	Radio control connection (track B3)
13	Radio control connection (track A2)
14	Radio control connection (track A1)
15	Not used

NOTE: if the vehicle is fitted with the "Carminat" navigation system, refer to **section 83C "Navigation assistance"**.

NOTE: on certain vehicles the display has a single connector (30-track).

GETtheMANUALS.org

RECOVERING A DISC LOCKED IN FAULTY AUDIO EQUIPMENT

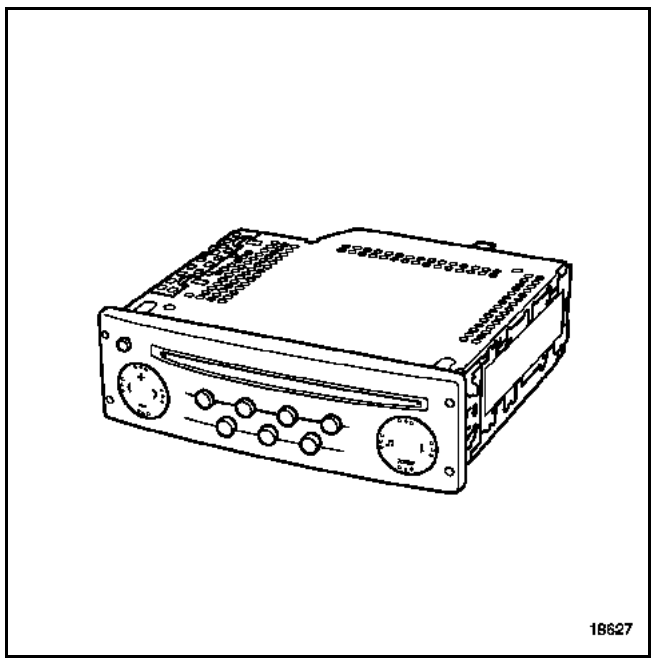

Remove the upper section of the radio.

First solution

If the electric ejector motor is operational, eject the CD using a **4.5 V** battery to supply electric motor (B) (place the + wire on contact (1) and the - wire on contact (2) while ejecting the CD).

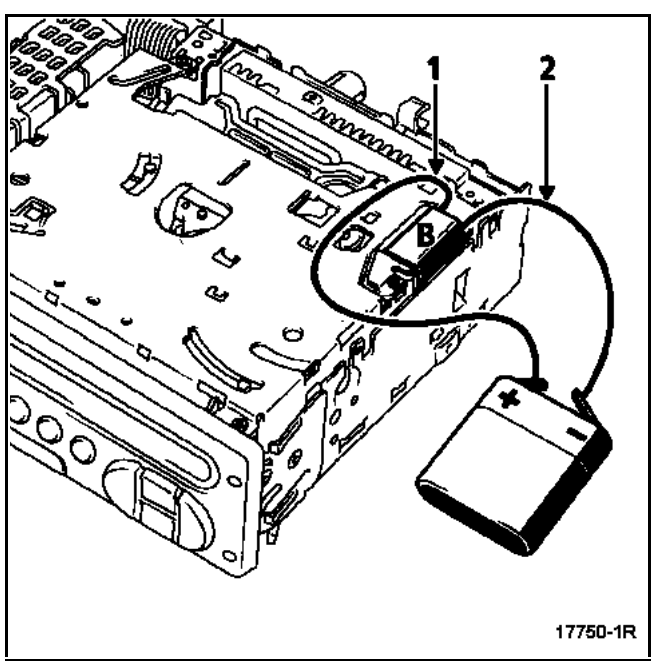

Second solution

If the electric ejector motor is not working, remove bolt (C) and disconnect the electric motor (B).

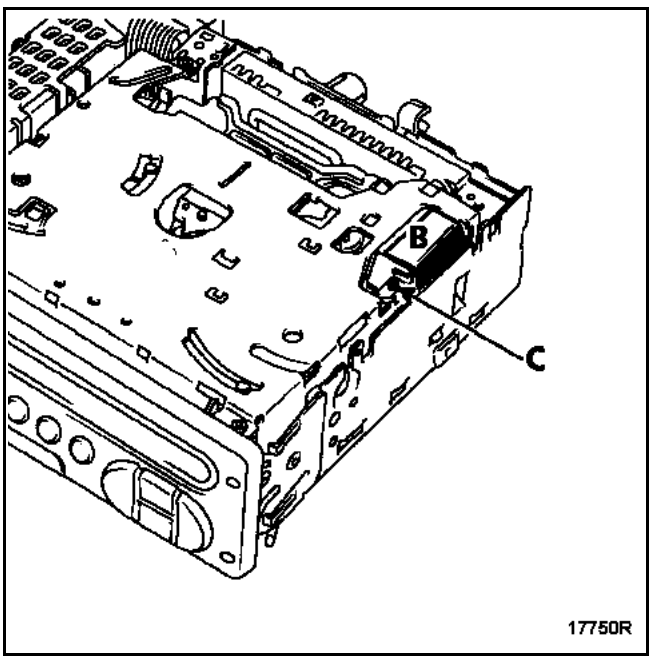

Turn toothed wheel (D) manually in a clockwise direction until the CD is ejected.

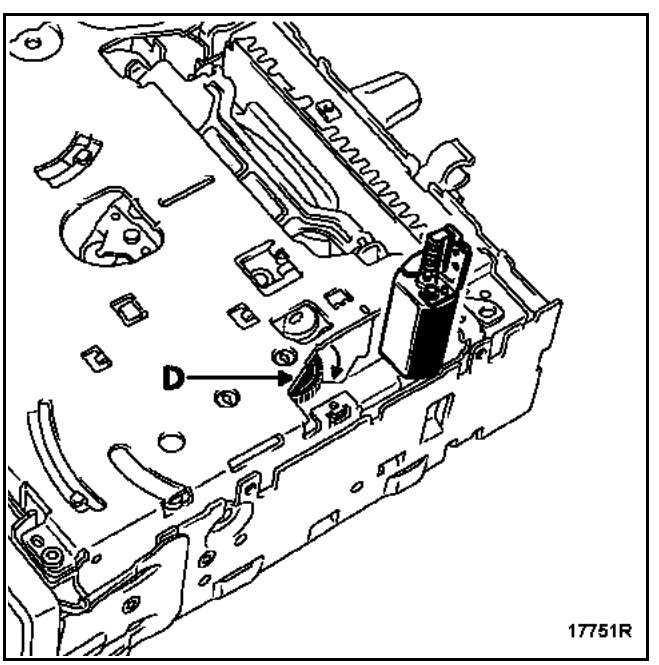

Before replacing the radio:

– refit the electric motor and attach it using the bolt (second solution only),
– refit the casing.

GETtheMANUALS.org

The "**Top of the Range**" audio equipment consists of:
– a tuner-amplifier (1) located under the rear seat base of the vehicle,
– a CD changer (2) in the dashboard panel,
– a planet wheel (3) control at the steering wheel,
– a remote display (4),
– an amplified radio aerial (5).

The amplifier-tuner includes a test menu for repair purposes. Refer to the "**self-diagnostic**" section. It is not permitted to work on a system component. Incorrectly operating components should be replaced.

DIAGRAMS

1 Basic audio equipment

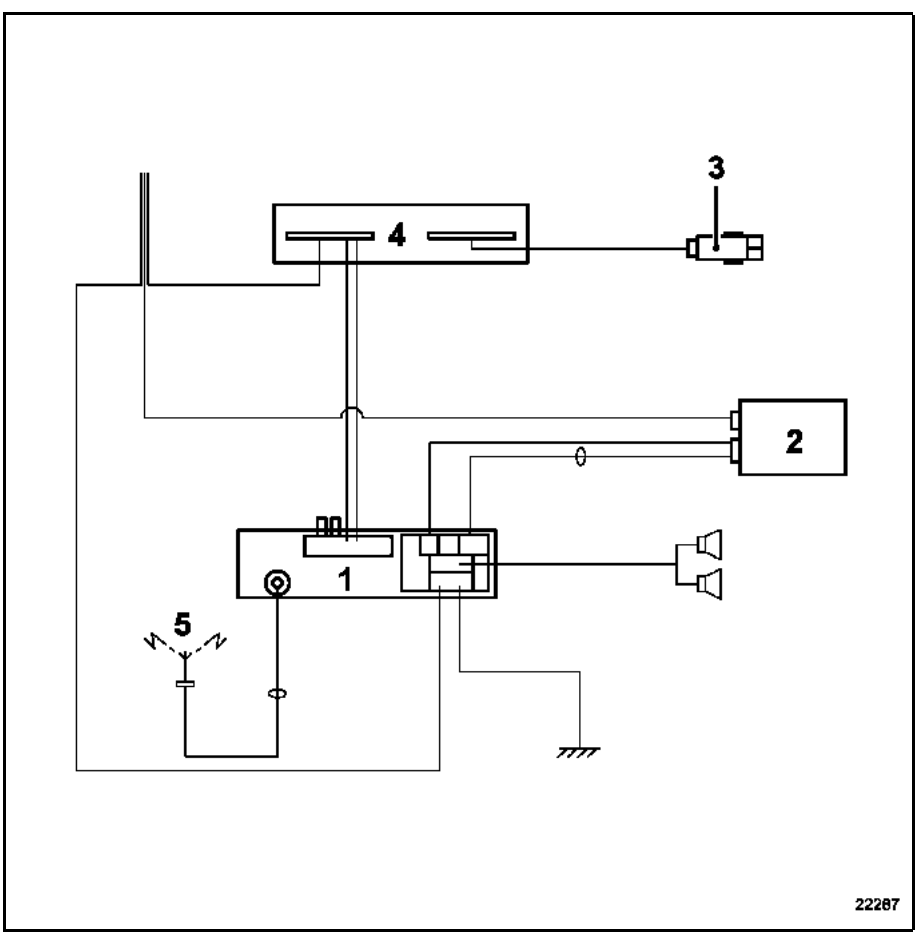

GETtheMANUALS.org

2 Audio equipment with navigation assistance

The top of the range audio equipment with navigation assistance consists of:
– a tuner-amplifier (1) located under the rear seat base of the vehicle,
– a CD changer (2) in the dashboard panel,
– a planet wheel (3) control at the steering wheel,
– an amplified radio aerial (5).
– a navigation screen (6),
– a navigation computer (7),
– a GPS receiver aerial (8),
– a central communications unit (9),
– a voice synthesiser speaker (10).

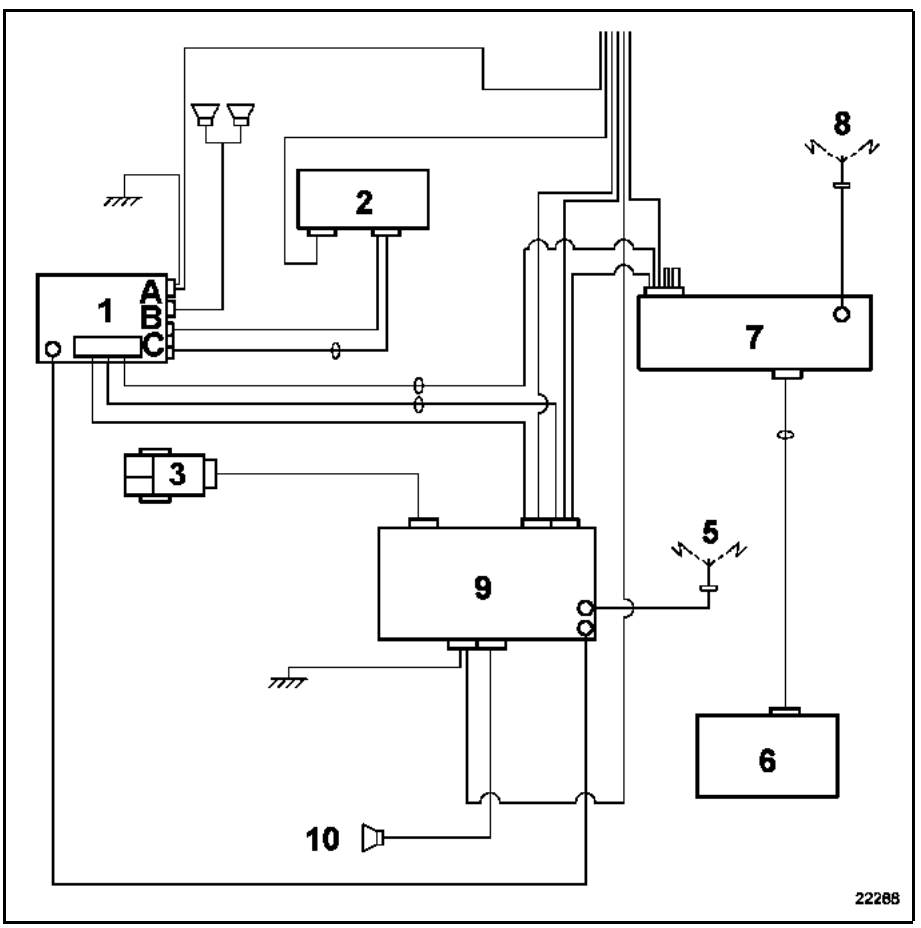

When the vehicle is fitted with a central communications unit (navigation assistance), the data associated with the audio equipment (presets, parameters, tone adjustment) can be stored on the Renault card (depending on version).

GETtheMANUALS.org

The radio will operate for approximately **20 minutes** without the ignition being switched to the accessories position. The radio beeps then switches off.

RADIO FUNCTION

This system uses two different tuners:
– the radio tuner,
– the Tuner for "**traffic information**" system messages.

The radio Tuner has three selection modes indicated on the screen and accessible from the front panel:
– manual mode (**Manu**),
– preset mode (**Preset**),
– manual or dynamic alphabetical mode (**List**), (refer to the "**Parameters**" **section**).

CD OPERATION

The CD changer can hold up to six discs (insert through the front panel).

The CD changer can play conventional discs and any audio tracks on a CD-ROM; the tracks can be played in order or at random.

NOTE:
– tracks from one disc only are played at random. When one CD is finished, random play continues on the next disc,
– the "**mute**" function stops playing of the disc and the display shows "**pause**" (depending on version).

Inserting compact discs

Press button (A) "LOAD".

"SELECT" is displayed.

Select the CD desired using buttons (1) to (6).

The messages "**WAIT**" then "**INSERT**" are displayed.

Insert the CD through slot (B).

The display shows "LOAD" then plays the disc.

Repeat this procedure for other discs.

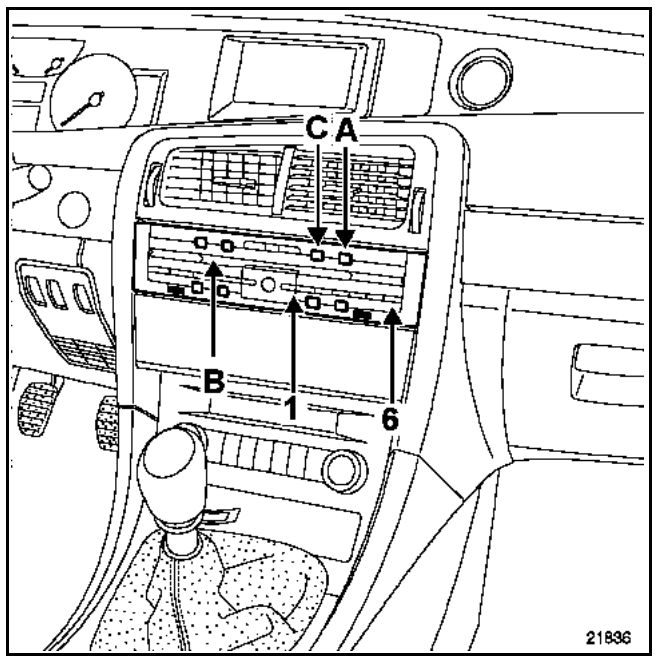

Ejecting compact discs

Press button (A).

Select the disc position using buttons (1) to (6).

The disc ejects. If it is left for a delay of approximately **15 seconds**, the disc is automatically reinserted.

NOTES:
– the sound is automatically muted during all of these processes,
– it is possible to eject all compact discs by pressing button (C) "ALL".

GETtheMANUALS.org

CONFIGURATIONS

Radio configuration is only required when entering the security code for the first time. It is then stored in case the power is cut.

- Select the volume ranges according to the vehicle: the system has a default parameter of "**0**".

- Select the relevant zone:
  - **Others** (Europe, Africa, other)
  - **America**
  - **Japan**
  - **Asia**
  - **Arabia**

NOTE: these configurations can be modified by pressing and holding the "**source**" button on the front panel or buttons "2" and "5".

SETTINGS

To enter "**Parameter**" mode ("**Expert**" mode), briefly press the "**Expert**" button until a beep is heard. This allows you to adjust the following functions:
- activation of **AF** mode (automatic retuning of stations: RDS),
- change the **volume range** according to vehicle speed (5 for maximum change, 0 for no change),
- activation of **Loudness** mode,
- activation of **manual or automatic tuner** mode,
- activate **AUX** (auxiliary) function for the DVD option.

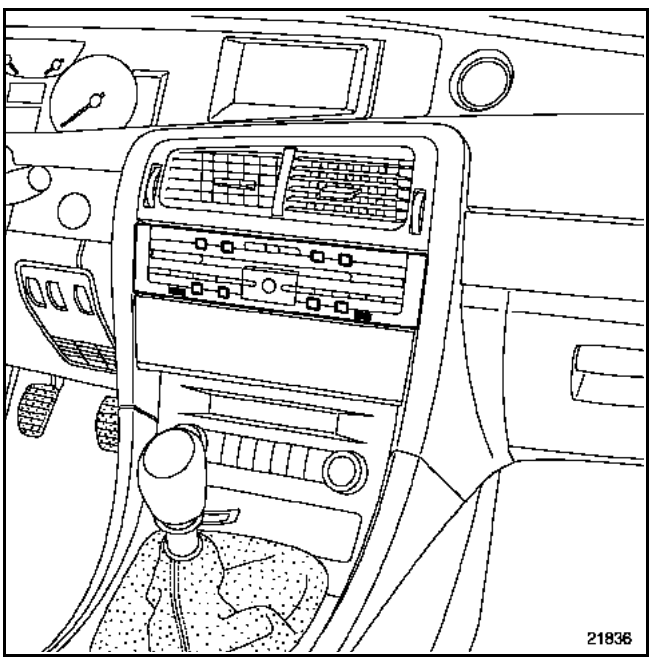

GETtheMANUALS.org

CONFIGURATIONS

The equipment may be configured after the security code has been entered for the first time or by pressing and holding the "**source**" button.

↓

Select the tone curve for the appropriate vehicle model. This graph has a default setting of "CURVE = 0".

↓

Confirm by pressing and holding the lower button on the steering wheel control.

↓

Select the geographical zone for tuner operation:
- **Others** (Europe, Africa, other)
- **America**
- **Japan**
- **Asia**
- **Arabia**

↓

Confirm by pressing and holding the lower button on the steering wheel control.

↓

Configure equipment with rear speakers: "**REAR ON/OFF**".

↓

Confirm by pressing and holding the lower button on the steering wheel control.

SETTINGS

Parameters can be altered by pressing the "**Expert**" button briefly.

↓

Activate or deactivate monitoring of automatic resynchronisation of stations (RDS): **AF ON/ OFF** using the "+" and "-" buttons.

↓

Scroll to the next parameter using the tumble wheel or the ↑ and ↓ buttons.

↓

Select the curve for speed-dependent volume control then confirm:
- **SPEED 0:** increase inactive.
- **SPEED 5:** maximum increase.

↓

Activate or deactivate the "**Loudness**" function: **LOUD ON/OFF**.

↓

Select the Tuner operating mode: **TUNE MAN/AUTO**

↓

Select the auxiliary input operating mode: **AUX AUTO/ON/OFF**

GETtheMANUALS.org

VOLUME CONTROL

When the audio equipment is switched on, the volume is the same as when it was previously switched off, with a maximum volume of 15.

NOTES:

– The "**mute**" function stops the CD from playing.

– The "**traffic information**" messages are played at the audio equipment's current volume setting. If the volume is altered during a message, the setting is stored until it is reset.

– Navigation messages are played at volume setting 7. If the volume is altered (between 0 and 10) during a message, the setting is stored until it is reset.

– The amplifier is fitted with a heat shield system which lowers the volume if the system overheats.

– Should one of the speakers short circuit, the supply to the amplifier will be cut off.

Volume correction

The volume can be corrected according to vehicle speed. Select the volume control variation desired using the "**Expert**" mode (briefly press the "**Expert**" button): SPEED 5 for maximum variation, 0 to cancel the variation.

Equaliser controls

The audio equipment has a range of settings depending on the type of music being played: CLASSIC/JAZZ/POP/VOICE/FLAT/PERSO

Balance/fader

For a simplified operation, the audio equipment allows all or some of the speakers to be activated or deactivated:

- < **FRONT** >: only the front speakers are used
- < **FRONT** >: only the front left-hand speakers are used
- **FRONT** >: only the front right-hand speakers are used
- < **REAR** >: only the rear speakers are used
- **ALL CAR**: all speakers are used (balance and fader centred)
- **PERSO**: previous personal settings

Auxiliary Output

The operating mode of the auxiliary source can be selected in the "Expert" menu:

– **AUX ON:** scroll to select source (radio → CD → AUX → radio etc.) even if there is no source signal → to the radio.
– **AUX AUTO:** automatic connection to the radio when a source signal is present.
– **AUX OFF:** inhibits source (radio → CD → radio).

GETtheMANUALS.org

CODED PROTECTION

Two components of the audio equipment are protected by a code:

- An initial 4 digit security code is linked to the tuner-amplifier. The user is asked for this code every time the power is cut. This code must be entered via the control planet wheel. The display shows "**CODE**" then "0000".

IMPORTANT: if an incorrect code is entered, the radio beeps, displays "**CODE**" and locks:

– 1st error: **1 min**,
– 2nd error: **2 min**,
– 3rd error: **4 min**... (**32 min** maximum).

When the code has been entered, certain parameters must be reprogrammed. Configuration is only required after the code has been entered for the first time (see the "**Configurations**" section).

NOTE: the code can be scrambled by pressing buttons **2** and **5** at the same time as the equipment is switched on. Then wait approximately **2 min**.

REMINDER: the audio equipment will operate for approximately **2 min** without the code having been entered (with regular warning beeps).

- A code that is exchanged between the CD changer and the tuner-amplifier.

– If a new CD changer is fitted, the amplifier code is programmed when the battery or CD changer is connected.
– If the tuner-amplifier is replaced, the security code of the old amplifier connected to the CD changer may be entered. The CD changer is programmed with the code for the new amplifier.
– If the old amplifier code is lost, the connection code can be cleared by the clearing code. The clearing code is transmitted by Techline, server etc.

IMPORTANT: the CD changer is supplied uncoded. As soon as it is installed into the vehicle, the CD changer is programmed with the tuner-amplifier connection code.

GETtheMANUALS.org

THE DISPLAY SHOWS "CODE" OR "0000"

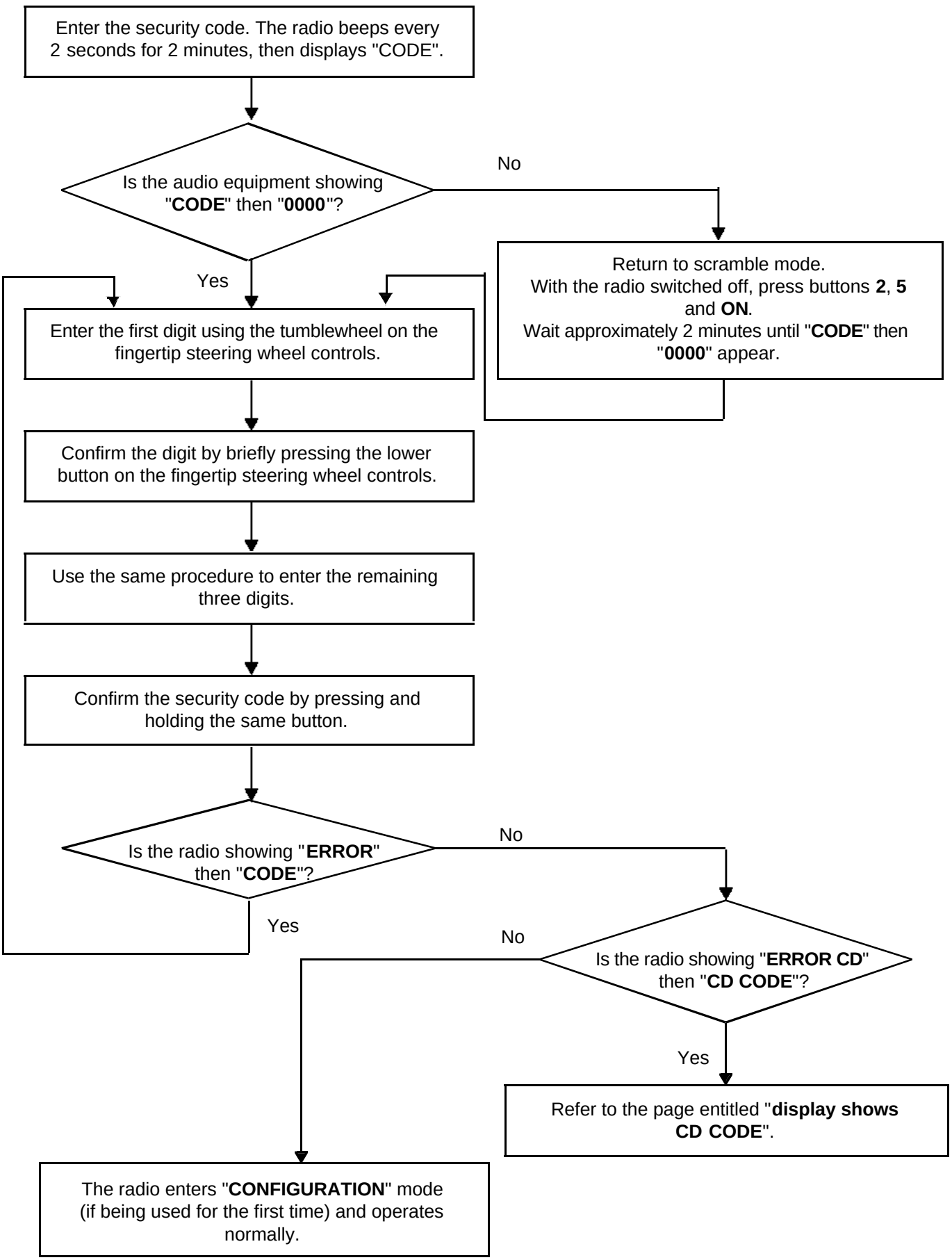

GETtheMANUALS.org

THE DISPLAY SHOWS "CD CODE"

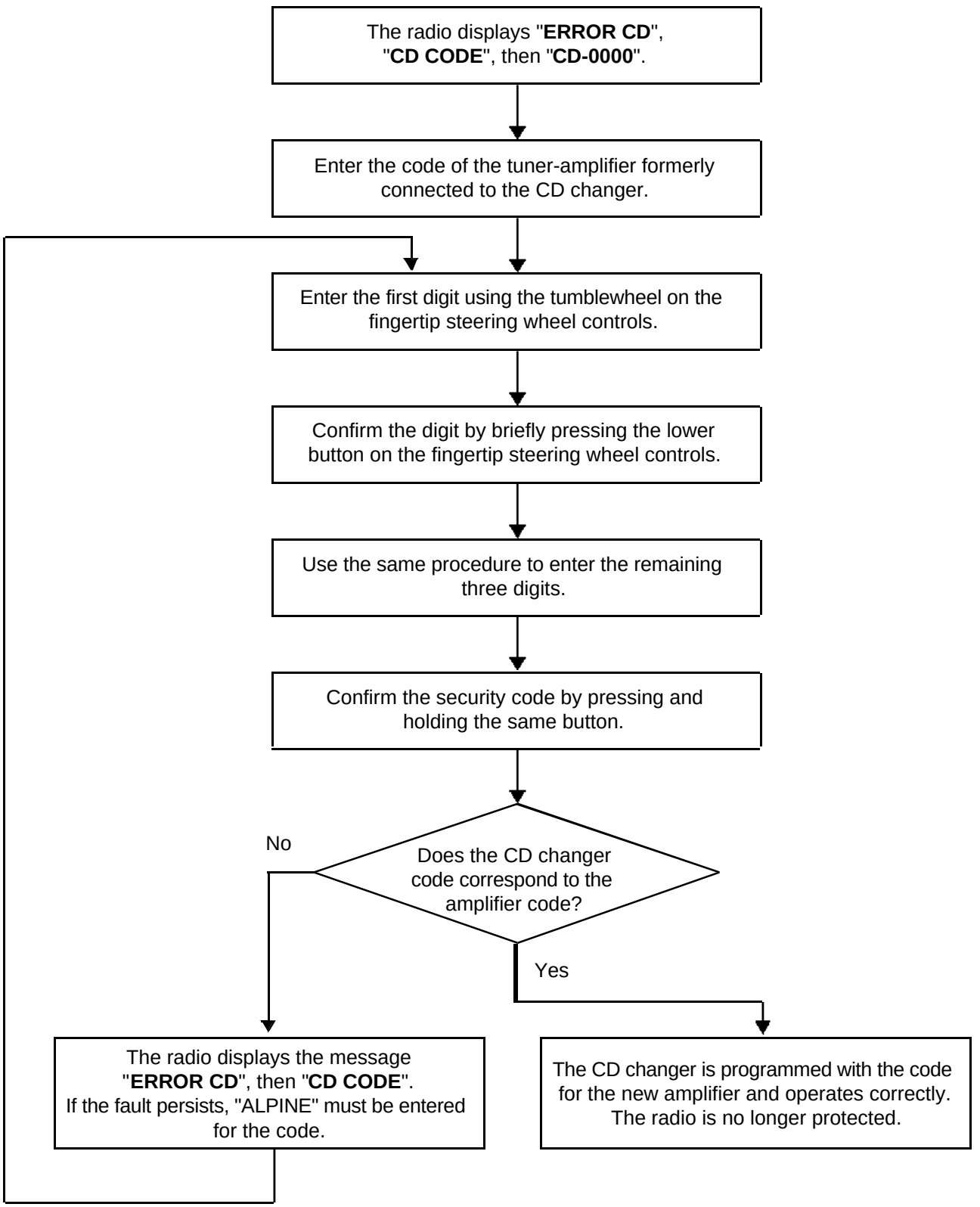

GETtheMANUALS.org

SELF-DIAGNOSTIC MODE

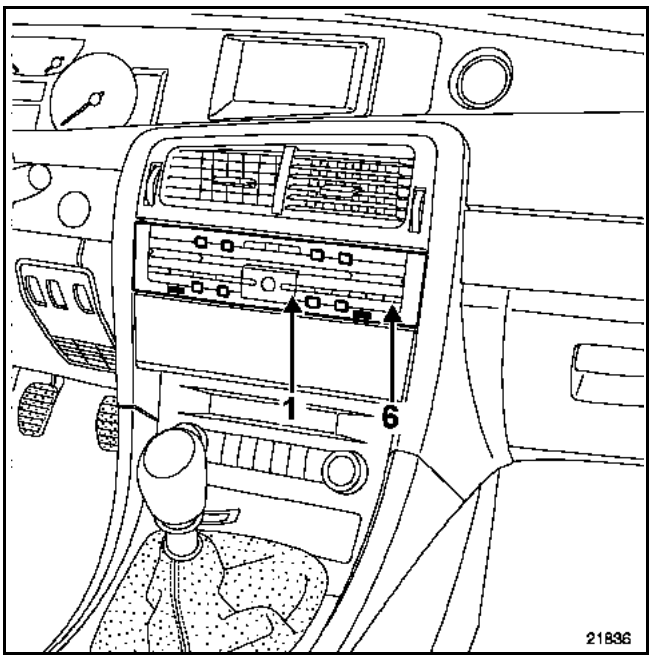

The self-diagnostic mode checks some of the main functions:

- **Testing the speakers**

Pressing and holding the "**Expert**" button powers speakers one-by-one. This is confirmed by the display. Compare the signals on each speaker.

- **Testing the level of reception**

Fault finding can be performed on the tuner by pressing the "**Expert**" button for a second time.

- The first four digits indicate the station.
- The next digit indicates the level of reception: 9 or a letter for an adequate level, lower than 3 indicates a poor level.

- **CD changer operation**

CD changer operation is shown by the presence of CDs being indicated by LEDs on the front panel and the display which indicate the presence of a disc:

- disc LED is not lit: no CD
- disc LED flashing: mechanism working (disc being inserted)
- "**ERROR CD**" message: no audio track on the disc
- "**LINK_ERR**": CD changer-amplifier connection broken
- "**HI TEMP**": CD changer temperature too high

GETtheMANUALS.org

IMPORTANT: the CD changer is supplied uncoded. As soon as the CD changer is installed, it is programmed with the tuner-amplifier code.

The clearing code is required if the security code is lost.

The CD changer is removed by the front panel using special tool **M.S. 1639**.

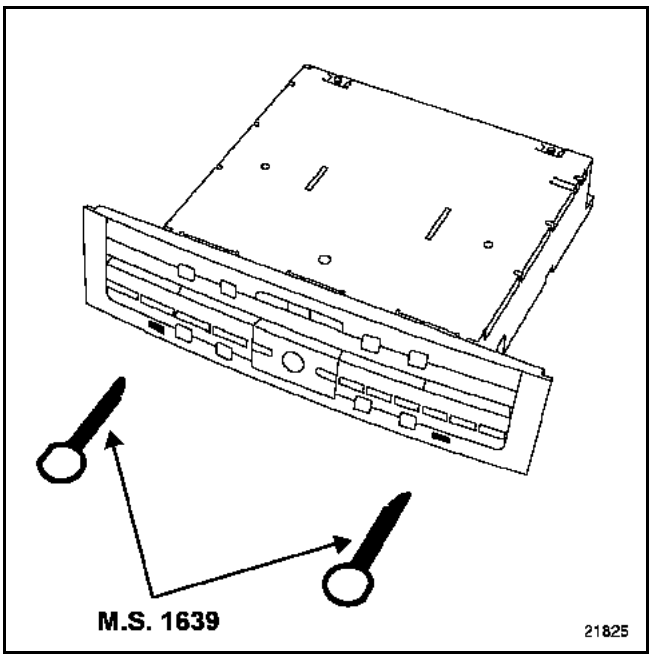

IMPORTANT: before connecting a new CD changer, bracket (A) must be removed otherwise the CD changer may be damaged.

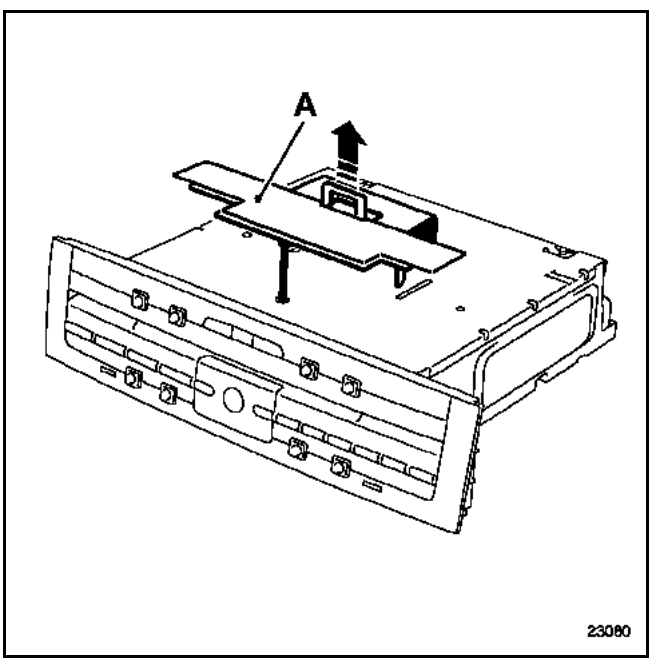

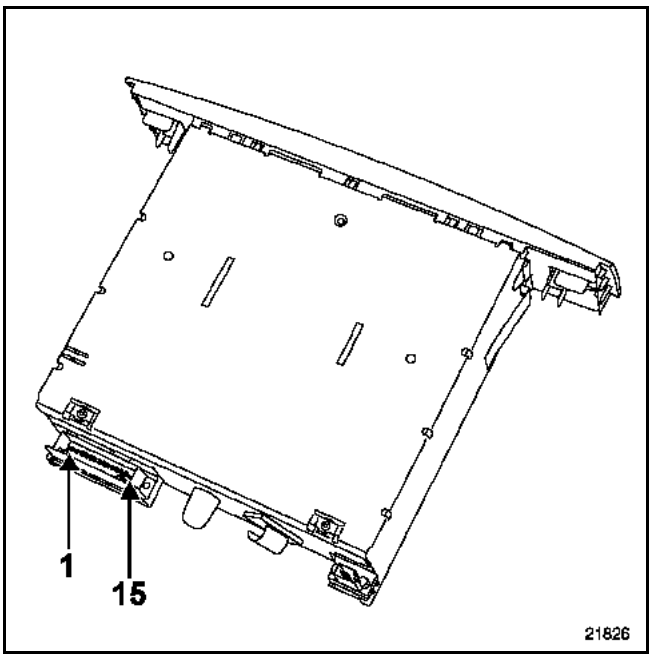

CONNECTION

Black connector

Track	Description
1	Not used
2	+ lighting feed
3	Not used

Green connector

Track	Description
1	Amplifier connection (track 15)
2	Amplifier connection (track 14)
3	Amplifier connection (track 23)
4	Amplifier connection (track 17)
5	Amplifier connection (track 4)
6	+ accessories feed (amplifier (track 3))
7	Amplifier connection (track 2)
8	Amplifier connection (track 1)
9	Amplifier connection (track 19 and 20)
10	Amplifier connection (track 18)
11	Amplifier connection (track 19 and 20)
12	Amplifier connection (track 15)
13	Amplifier connection (track 15)
14	Not used
15	Amplifier connection (track 16)

GETtheMANUALS.org

The amplifier incorporates the tuner function. It is mounted on its own bracket under the rear seat.

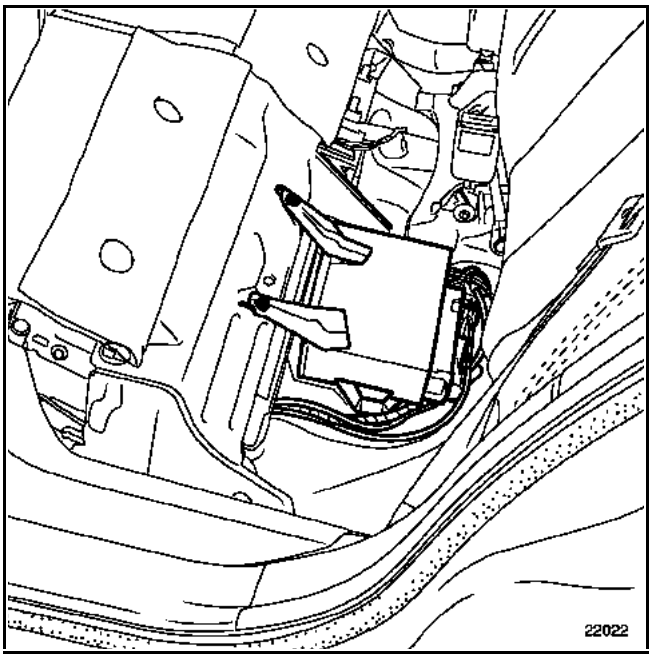

Black connector (A)

Track	Description
1	Vehicle speed signal
2	Not used
3	Voice synthesiser signal (mute)
4	+ battery
5	Aerial amplifier supply (except navigation)
6	Not used
7	+ accessories feed
8	Earth

Black connector (B)

Track	Description
1	+ Rear right-hand speakers
2	- Rear right-hand speakers
3	+ Front right-hand speakers
4	- Front right-hand speakers
5	+ Front left-hand speakers
6	- Front left-hand speakers
7	+ Rear left-hand speakers
8	- Rear left-hand speakers

Yellow connector (C)

Track	Description
1	CD changer connection (track 8)
2	CD changer connection (track 7)
3	+ accessories feed (CD changer (track 6)
4	CD changer connection (track 5)
5	Not used
6	Not used

Blue connector (D)

Track	Description
13	CD changer connection (track 3)
14	CD changer connection (track 2)
15	CD changer connection (tracks 1, 12 and 13)
16	CD changer connection (track 15)
17	CD changer connection (track 4)
18	CD changer connection (track 10)
19	CD changer connection (tracks 9 and 11)
20	CD changer connection (tracks 9 and 11)

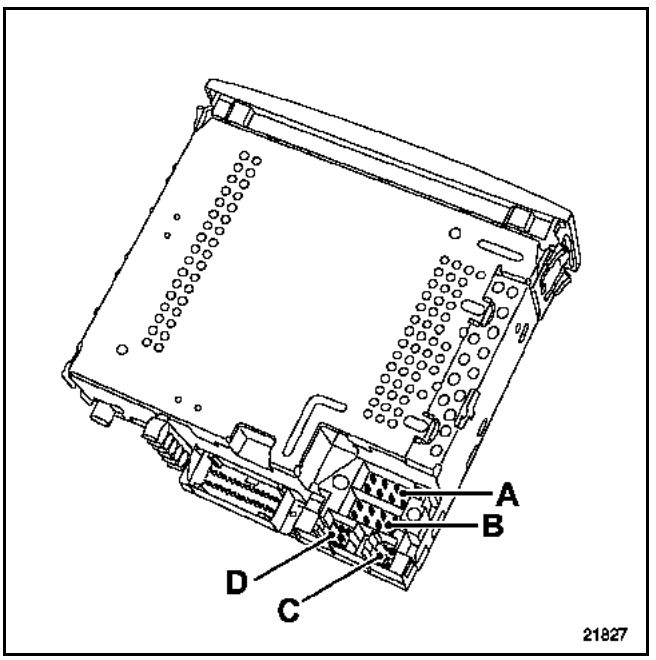

If the tuner-amplifier is replaced, the security code of the old tuner-amplifier in the vehicle must be entered. Refer to the page entitled "security code".

GETtheMANUALS.org

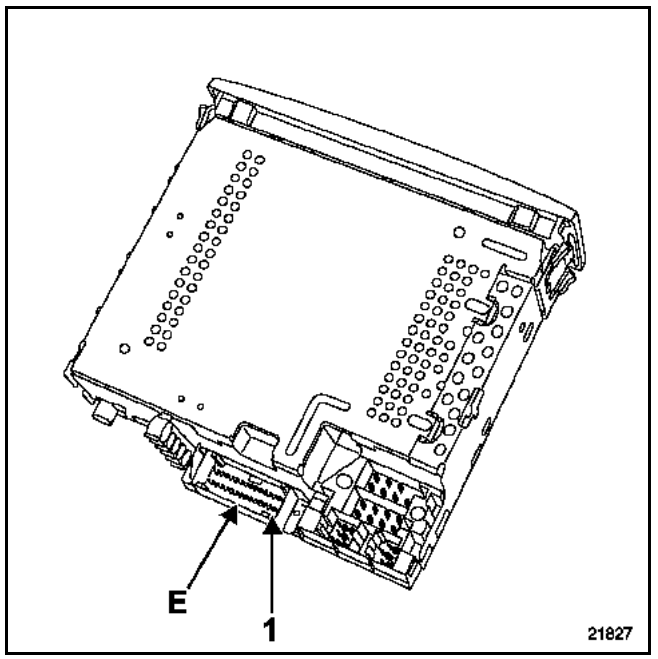

Red connector (E)

Track	Description
1	Multiplex connection to display (track 14) (except navigation)
2	Multiplex connection to display (track 15) (except navigation)
3	Shunt track 5 (except navigation)
4	Shunt track 6 (except navigation)
5	Shunt track 3 (except navigation)
6	Shunt track 4 (except navigation)
7	Not used
8	Radio On/Off signal to display (except navigation)
9	Radio On/Off signal (communication unit)
10	Not used
11	Not used
12	Not used
13	Not used
14	Not used
15	Not used
16	Not used
17	Not used
18	Not used
19	Not used
20	Not used
21	Not used
22	Not used
23	Not used
24	Not used
25	Not used
26	Not used
27	Not used
28	Not used
29	Not used
30	Not used

GETtheMANUALS.org

NOTE: the "**top of the range**" audio equipment display uses the multimedia multiplex connection (radio, navigation).

Connector allocations

Grey connector (15-track)

Track	Description
1	External temperature signal
2	External temperature earth
3	Not used
4	Not used
5	Earth
6	Lighting
7	Lighting dimmer
8	+ accessories feed
9	+ battery
10	External temperature output
11	Not used
12	Radio On signal
13	Not used
14	Multimedia multiplex connection to tuner-amplifier
15	Multimedia multiplex connection to tuner-amplifier

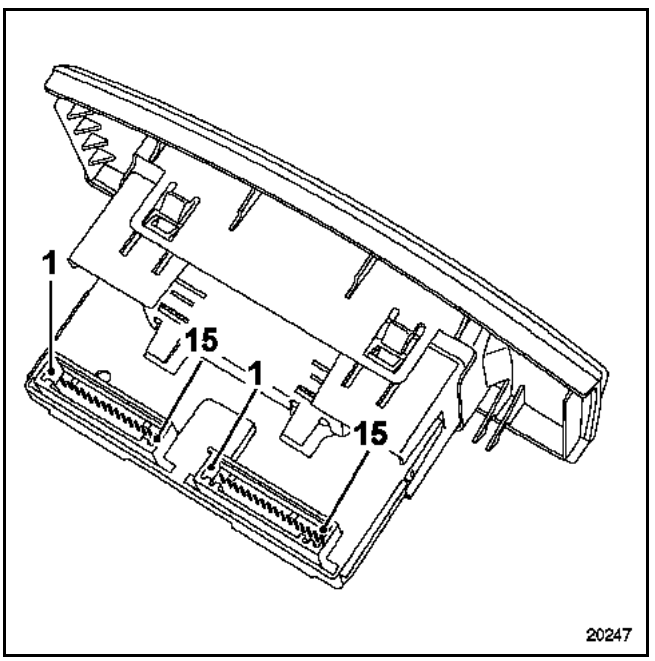

Red connector (15-track)

Track	Description
1	Not used
2	Not used
3	Not used
4	Not used
5	Not used
6	Not used
7	Not used
8	Not used
9	Radio control connection (track B1)
10	Radio control connection (track A3)
11	Radio connection (track B2)
12	Radio control connection (track B3)
13	Radio control connection (track A2)
14	Radio control connection (track A1)
15	Not used

NOTE: if the vehicle is fitted with the "Carminat" navigation system, refer to **section 83C "Navigation assistance"**.

GETtheMANUALS.org

The radio beeps approximately every 2 seconds

The radio does not work (no sound) when the "radio ON" button is pressed

The radio does not switch on automatically when "+ accessories feed" is switched on or switches off after 20 minutes

The radio is switched on, but the display and planet wheel controls do not work

The planet wheel controls do not work

Radio reception problems

The volume does not increase with the vehicle speed.

Lighting does not change when the vehicle lights are switched on

No sound cut-out during Carminat or hands-free equipment messages

NOTE: before carrying out any work on the audio equipment, reset the adjustable settings to "0" (front/rear, left/right balance, tone adjustment, etc.).

GETtheMANUALS.org

THE RADIO BEEPS APPROXIMATELY EVERY TWO SECONDS

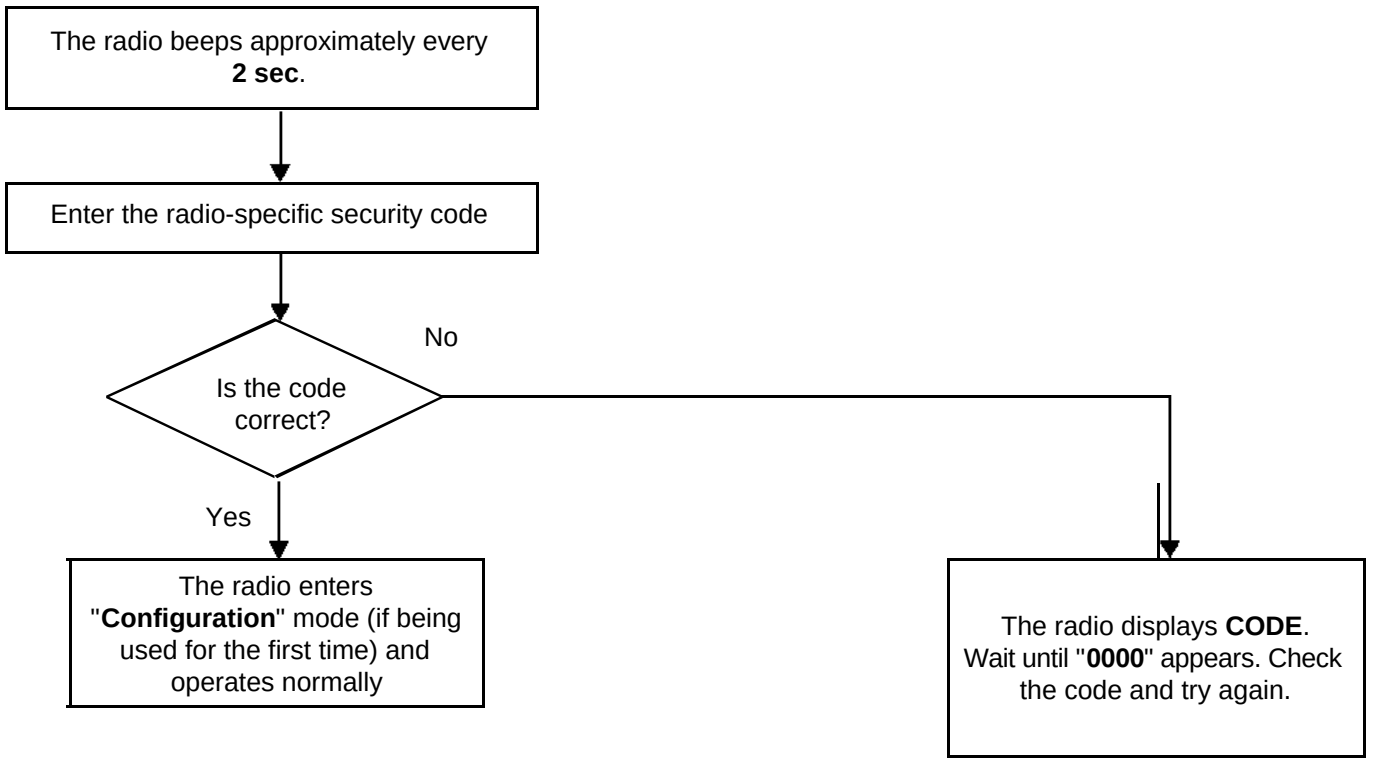

GETtheMANUALS.org

RADIO DOES NOT WORK*

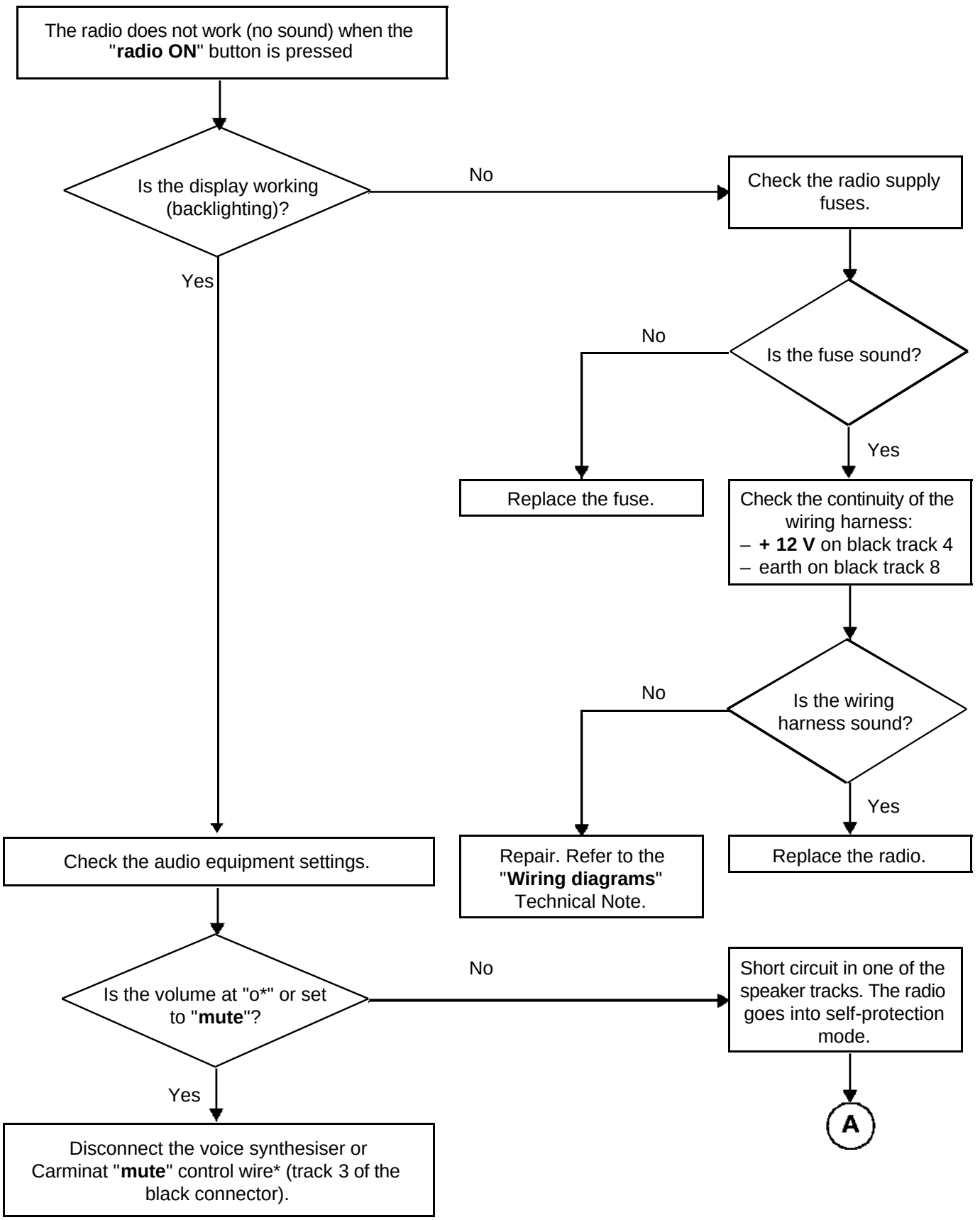

* If the vehicle is fitted with Carminat, refer to **section 83C "Navigation assistance"**

GETtheMANUALS.org

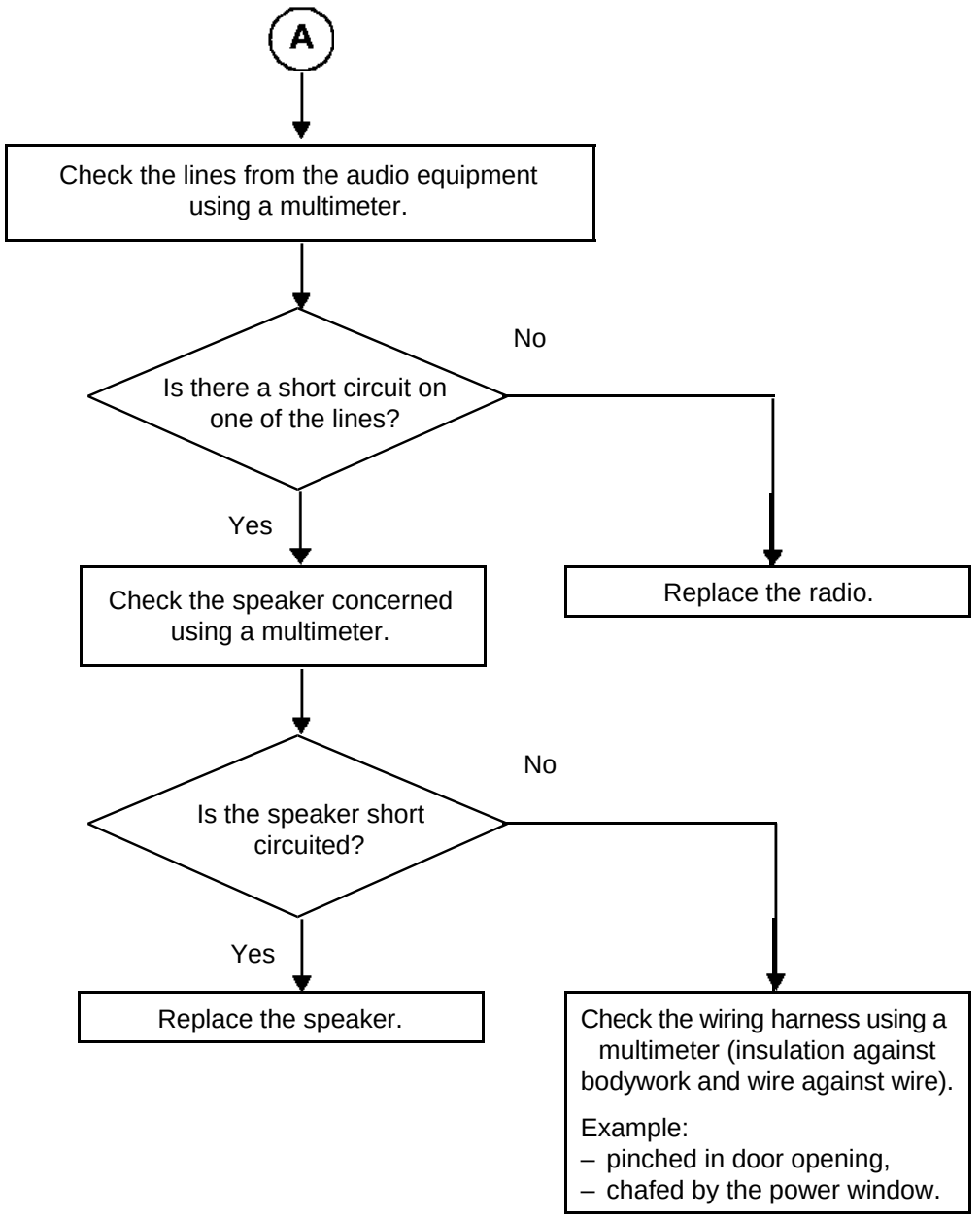

GETtheMANUALS.org

THE RADIO DOES NOT SWITCH ON AUTOMATICALLY OR GOES OFF AFTER 20 MINUTES

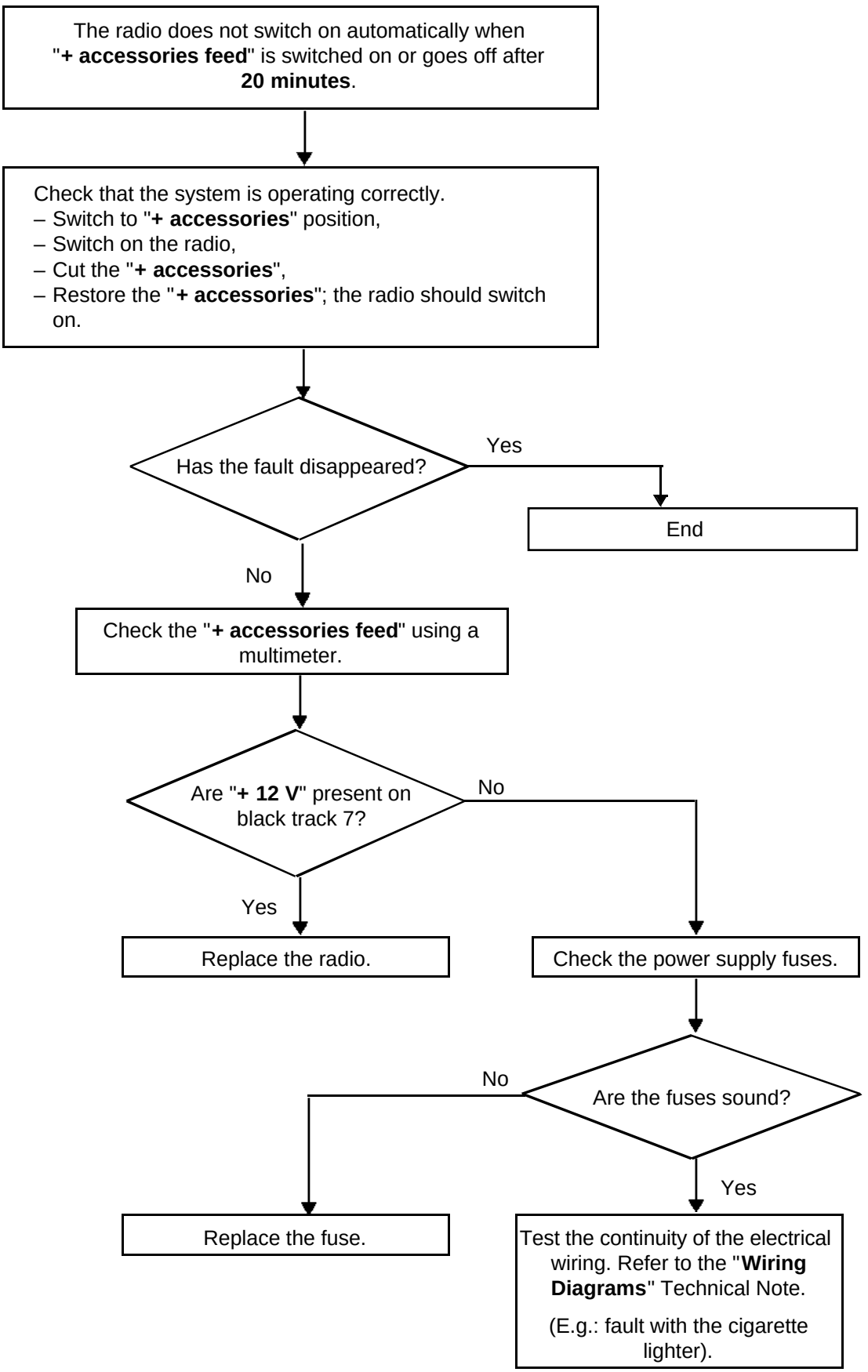

GETtheMANUALS.org

THE DISPLAY DOES NOT WORK

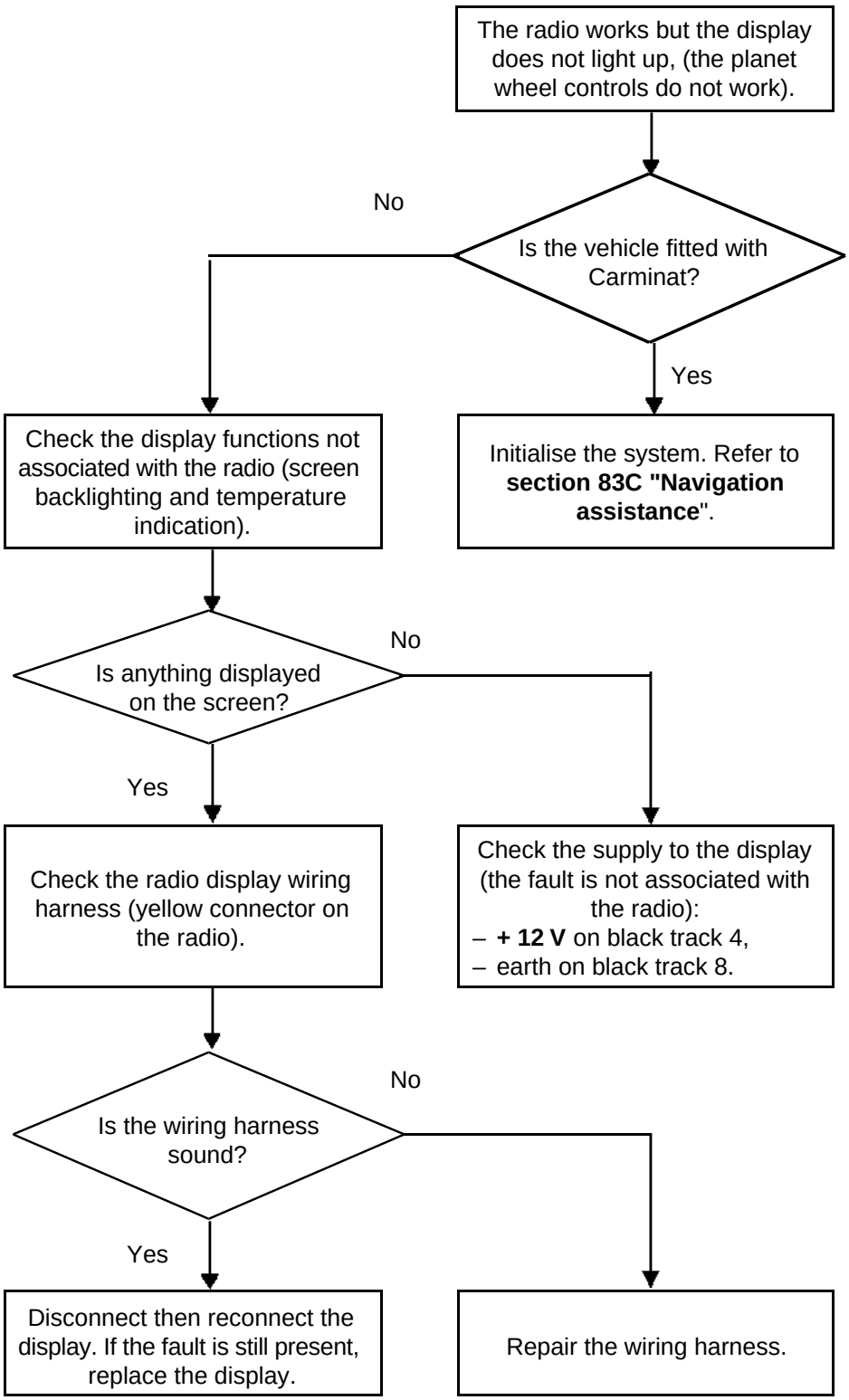

GETtheMANUALS.org

THE PLANET WHEEL CONTROLS DO NOTWORK

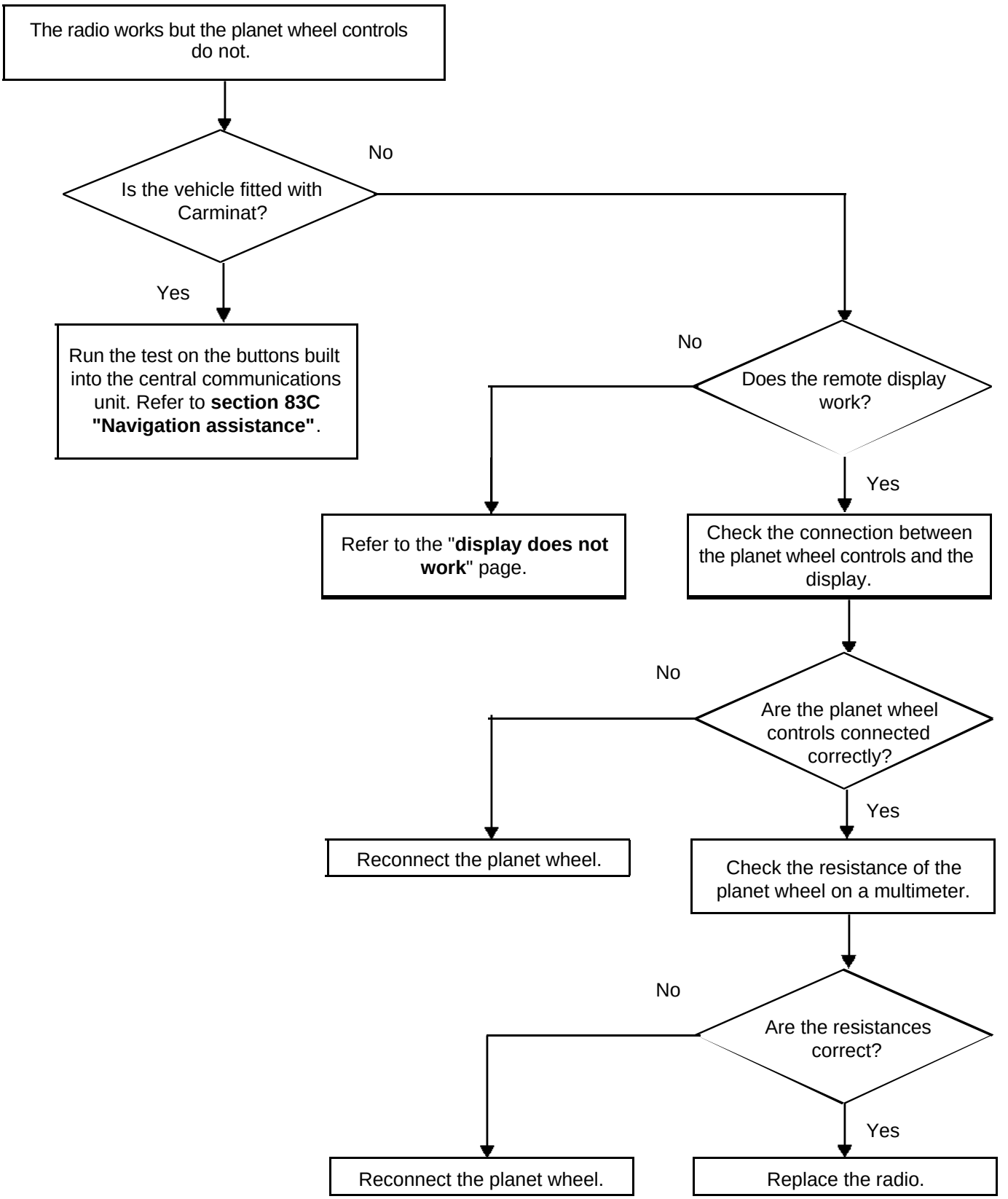

GETtheMANUALS.org

RADIO RECEPTION FAULTS

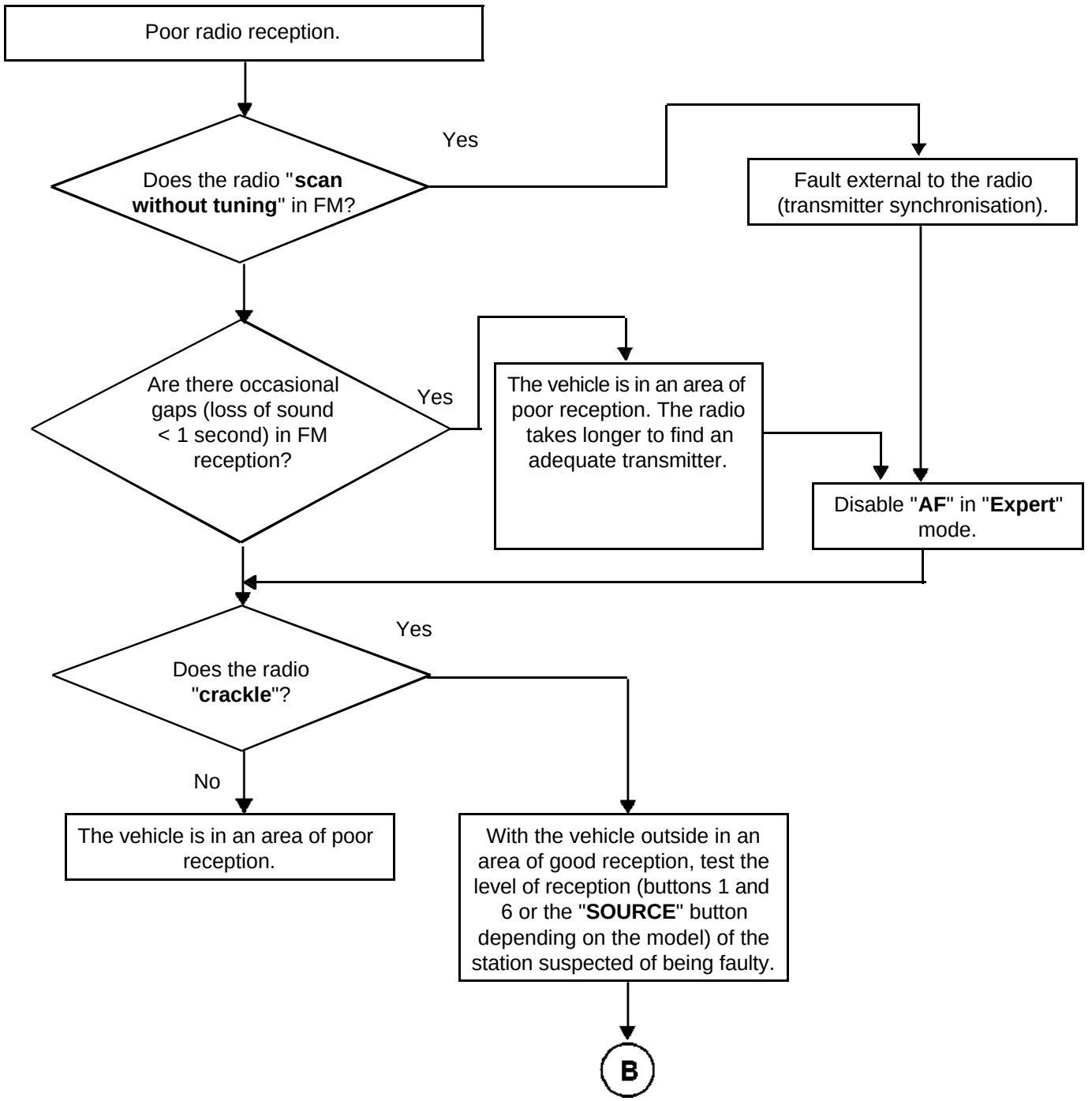

GETtheMANUALS.org

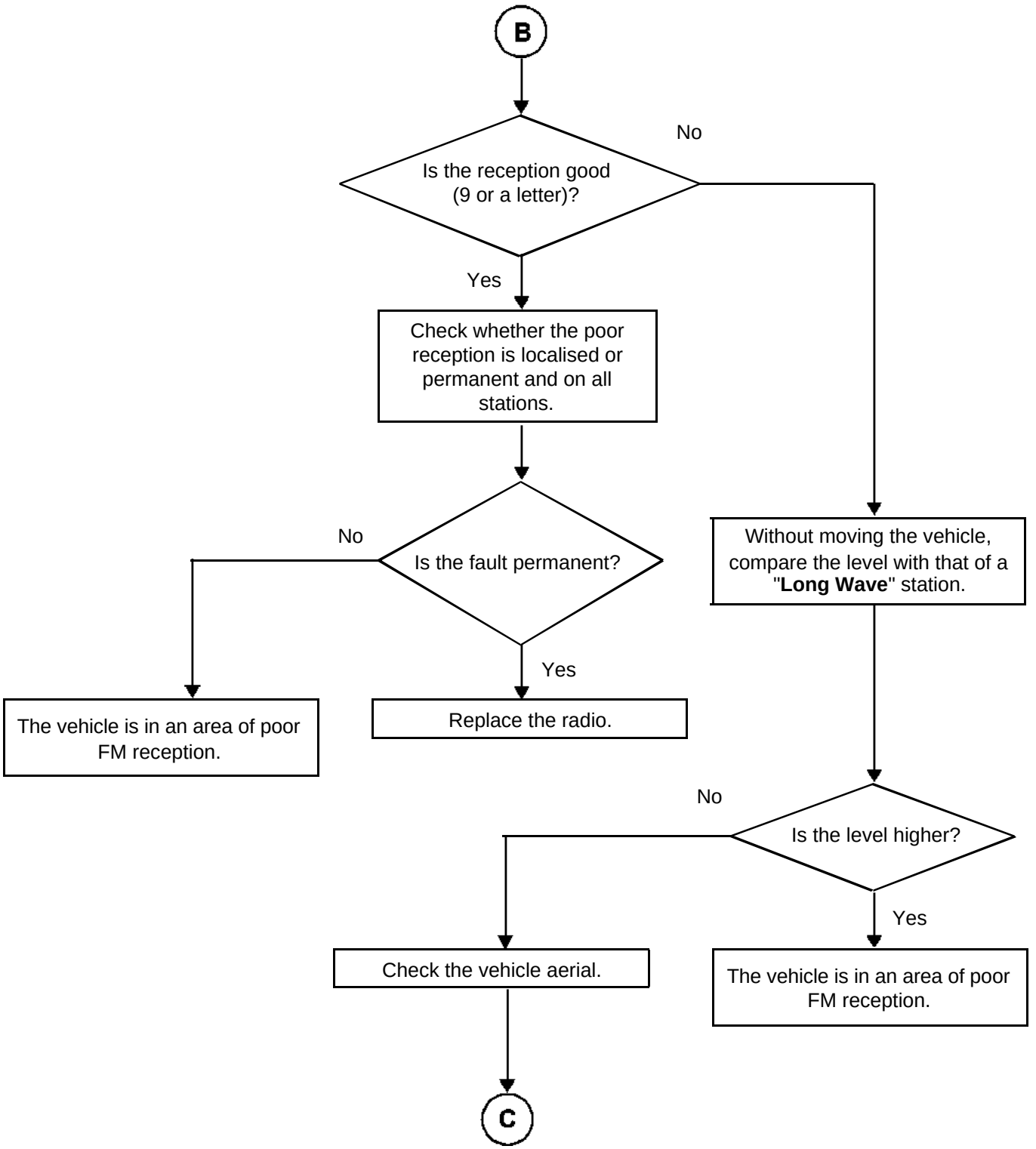

GETtheMANUALS.org

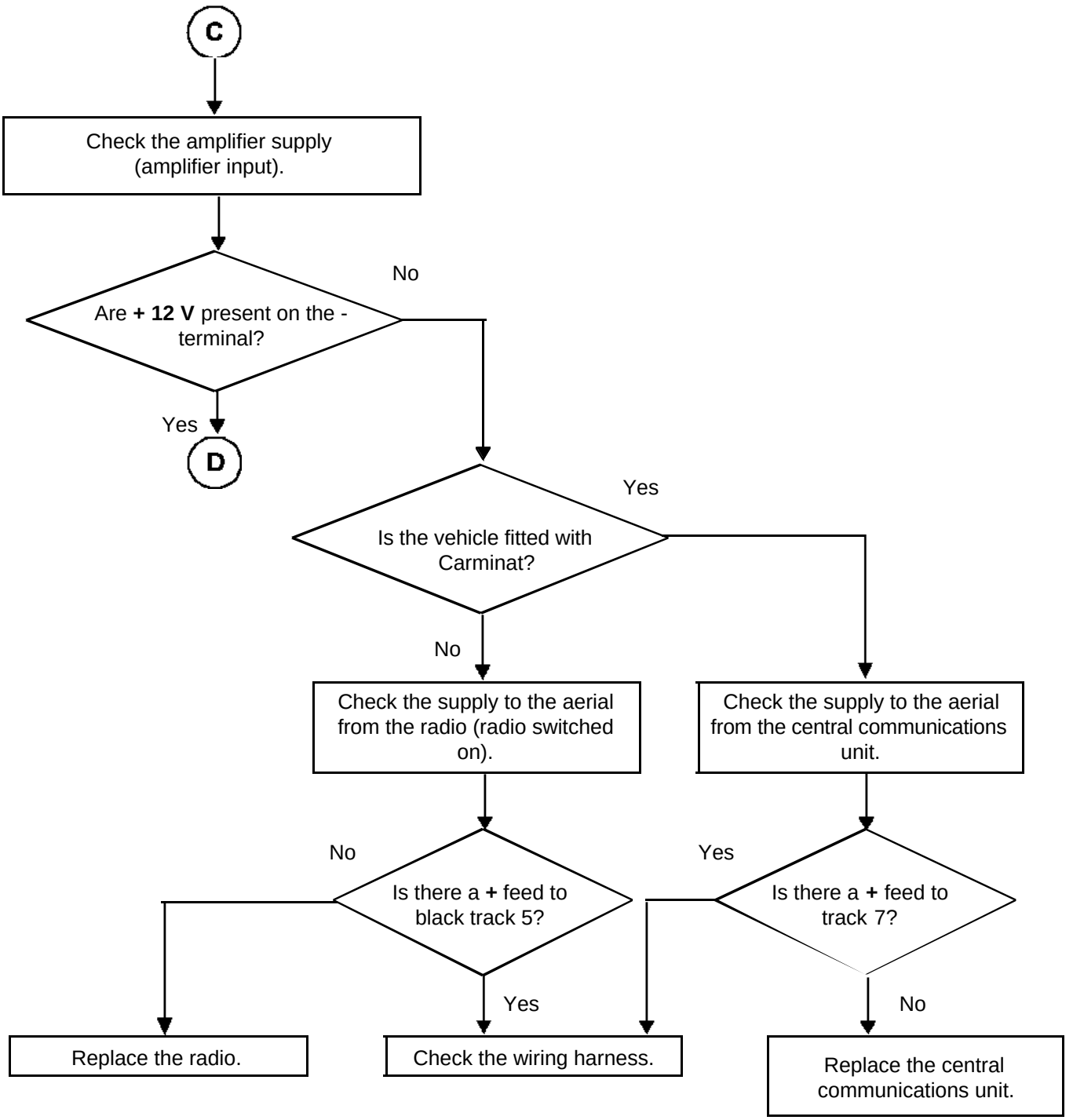

GETtheMANUALS.org

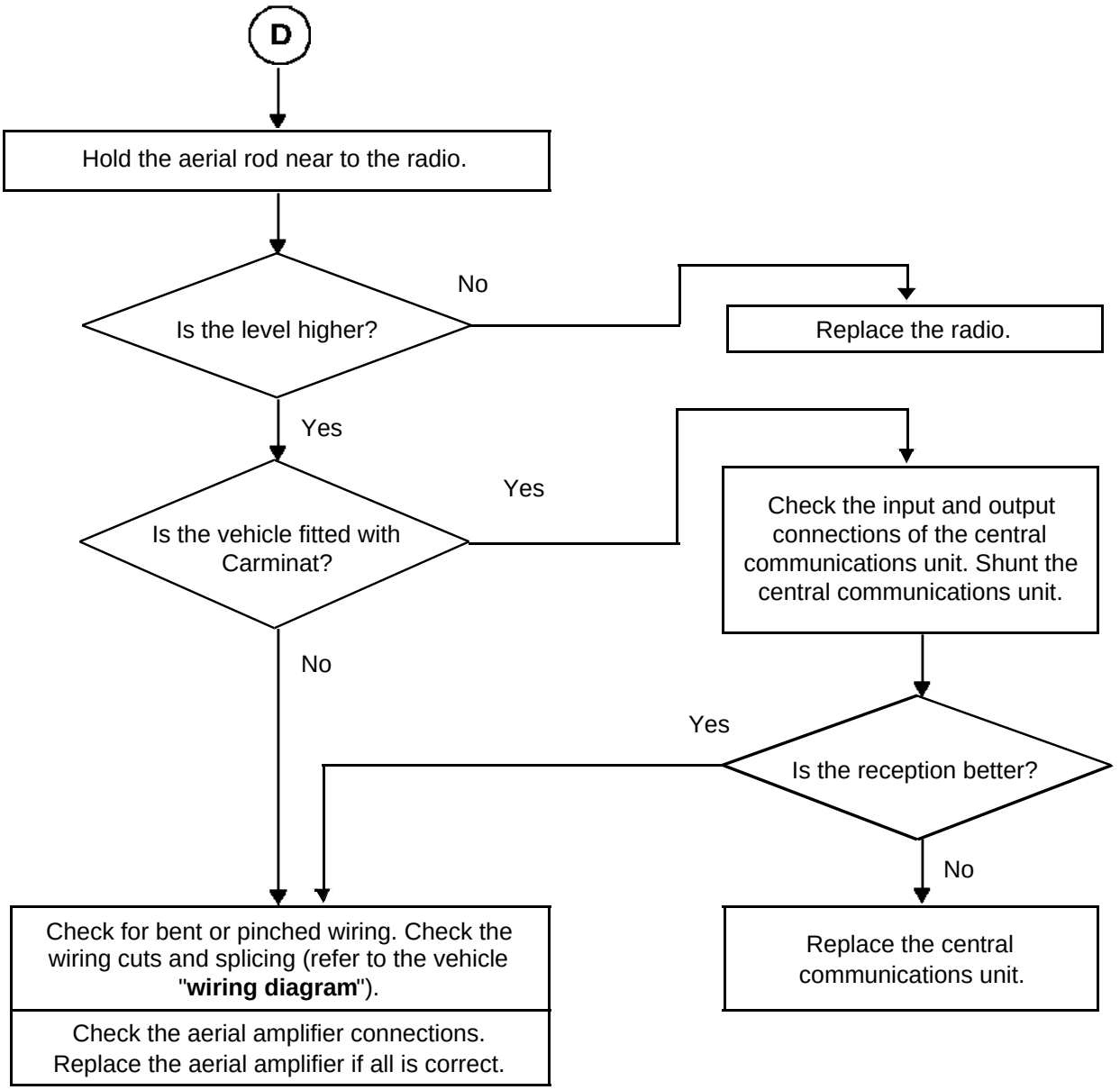

GETtheMANUALS.org

NO "LONG WAVE" RECEPTION

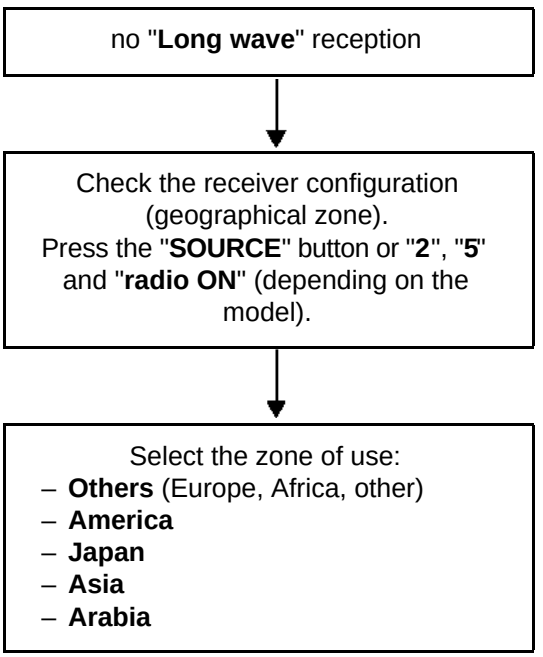

Information:

	Others	America	Japan	Asia	Arabia
FM band and MHz	87.5 - 108	87.5 - 108	76 - 90	87.5 - 108	87.5 - 108
AM band and kHz (Long wave)	155 - 279	-	-	144 - 288	144 - 288
(Medium Wave)	531 - 1602	530 - 1710	522 - 1629	531 - 1629	531 - 1602

GETtheMANUALS.org

THE VOLUME DOES NOT INCREASE WITH THEVEHICLE SPEED

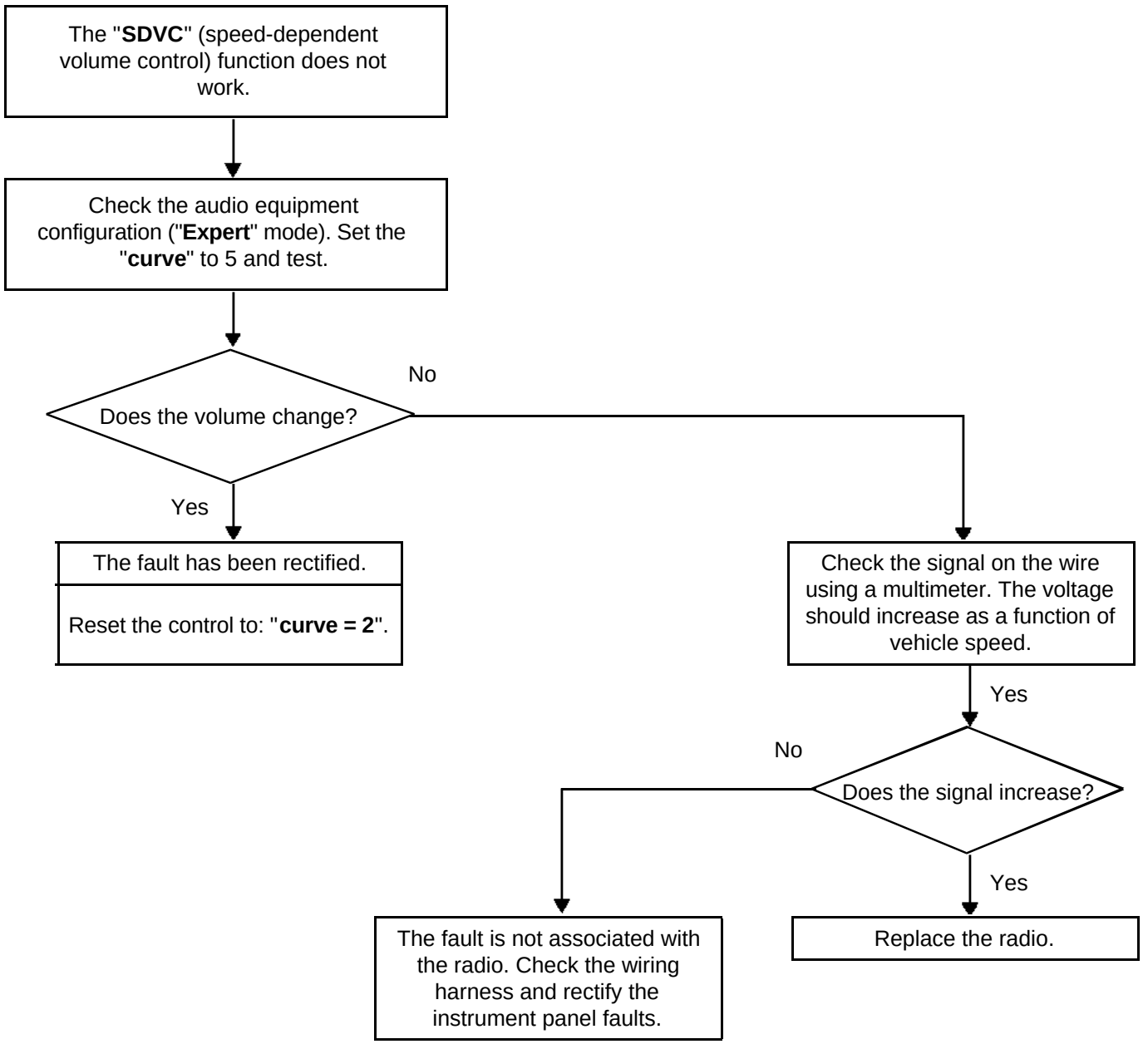

GETtheMANUALS.org

LIGHTING DOES NOT CHANGE WHEN THEVEHICLE LIGHTS ARE SWITCHED ON

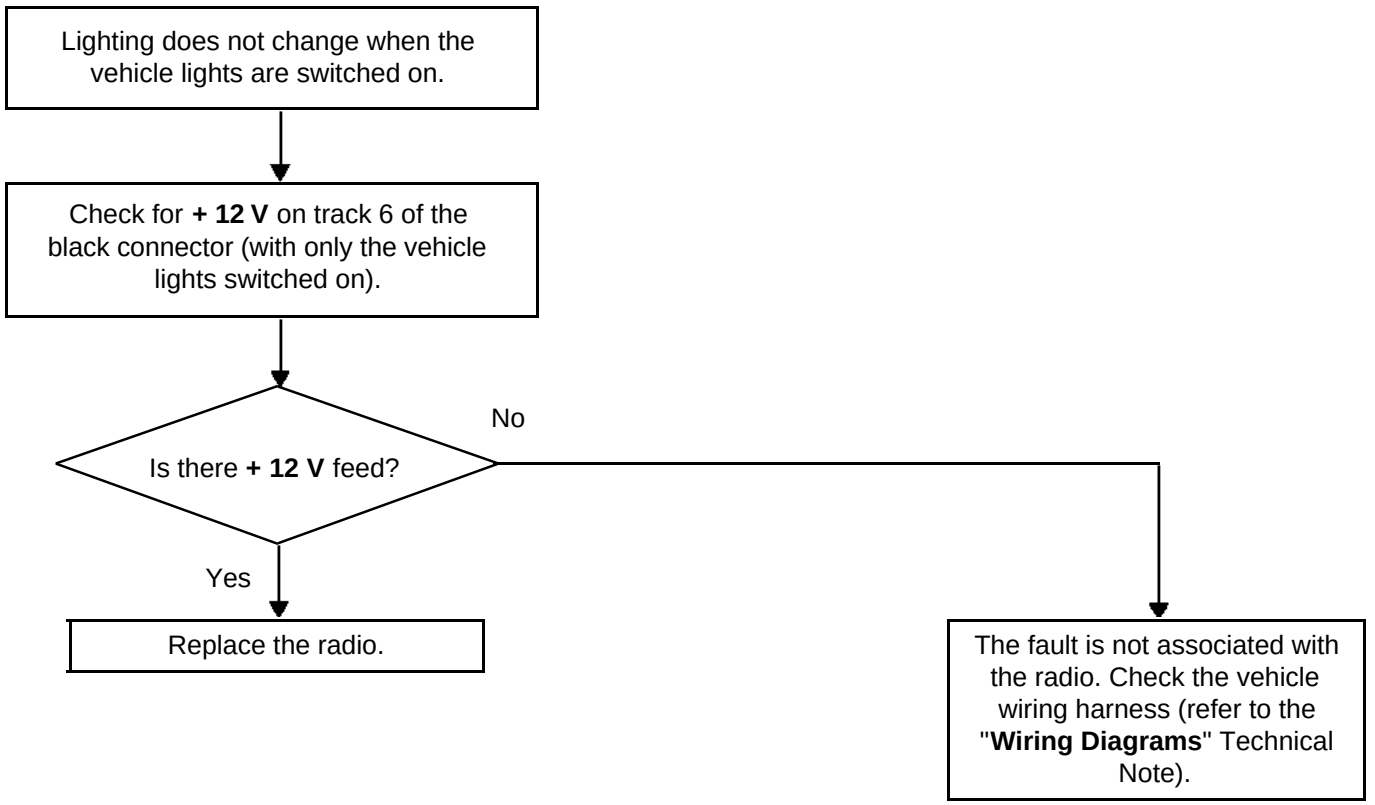

GETtheMANUALS.org

NO SOUND CUT-OUT DURING CARMINAT, VOICE SYNTHESISER OR HANDS-FREE EQUIPMENT MESSAGES

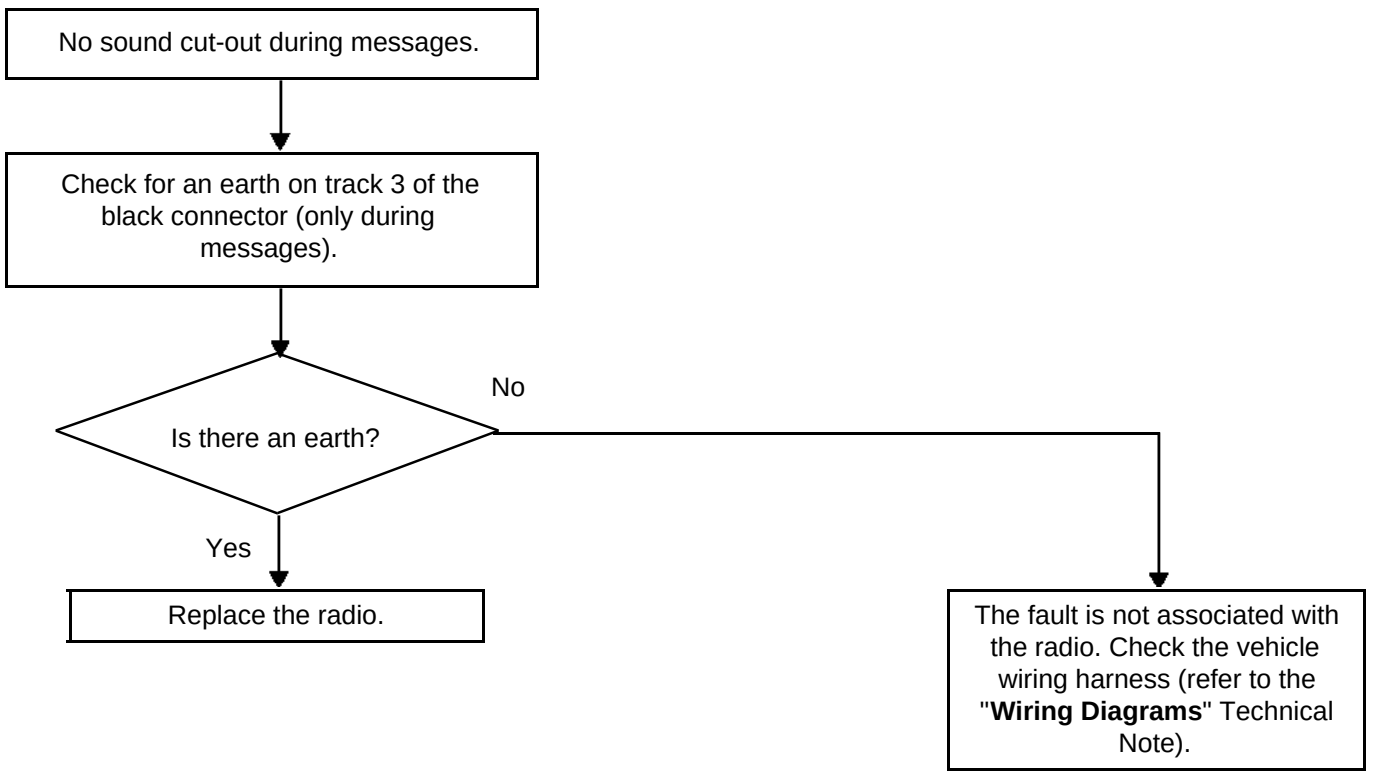

GETtheMANUALS.org

Audio equipment steering wheel control (A) is connected to the display remote from the dashboard or central communications unit.

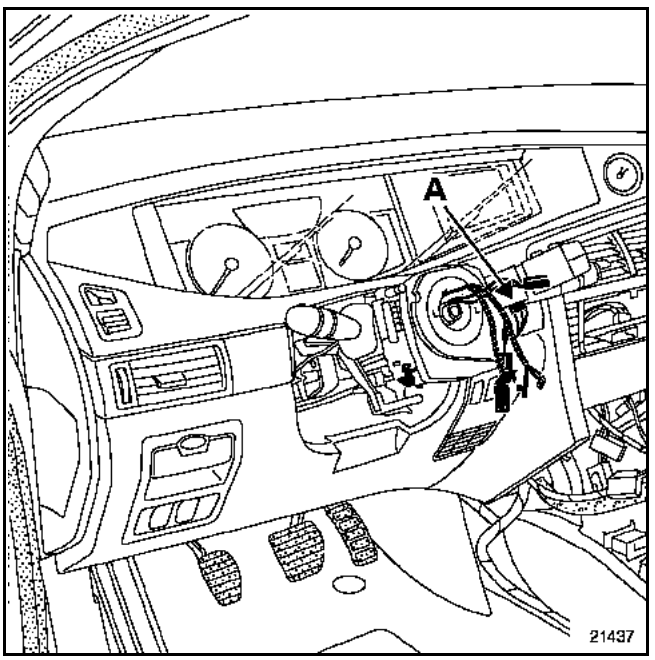

Track	Description
A1	Display connection (track 14)
A2	Display connection (track 13)
A3	Display connection (track 10)
B1	Display connection (track 9)
B2	Display connection (track 11)
B3	Display connection (track 12)

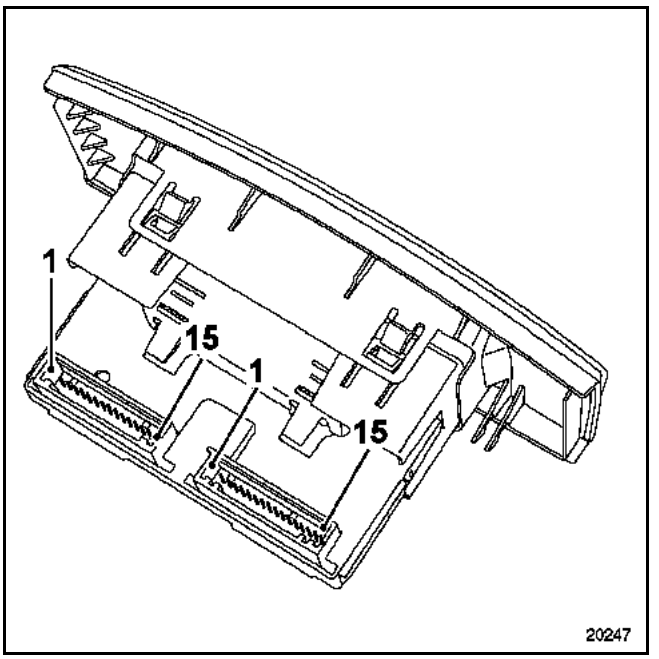

NOTE: if the car is fitted with a CARMINAT navigation system, the audio equipment control on the steering wheel is linked to the central communications unit (see **section 83C**).

On certain vehicles the display has a single connector (30-track).

GETtheMANUALS.org

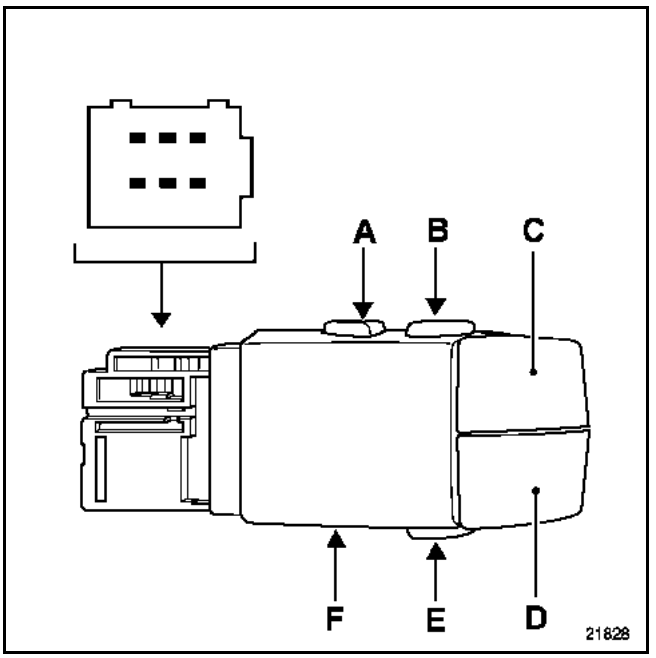

ACTION	TRACK	RESISTANCE
Lower button (E)	A3/B1	28 Ω
Volume decrease (D)	B3/B1	0.5 Ω
Volume increase (C)	A1/B1	0.5 Ω
Top right button (B)	A3/B2	28 Ω
Top left button (A)	B3/B2	28 Ω
Tumblewheel (F) (1st position)	A3/A2	0.5 Ω
Tumblewheel (F) (2nd position)	B3/A2	0.5 Ω
Tumblewheel (F) (3rd position)	A1/A2	0.5 Ω

GETtheMANUALS.org

The vehicles are fitted with a radio reception-specific aerial located in the tailgate.

Amplifier (1) is mounted on the roof, behind the lining.

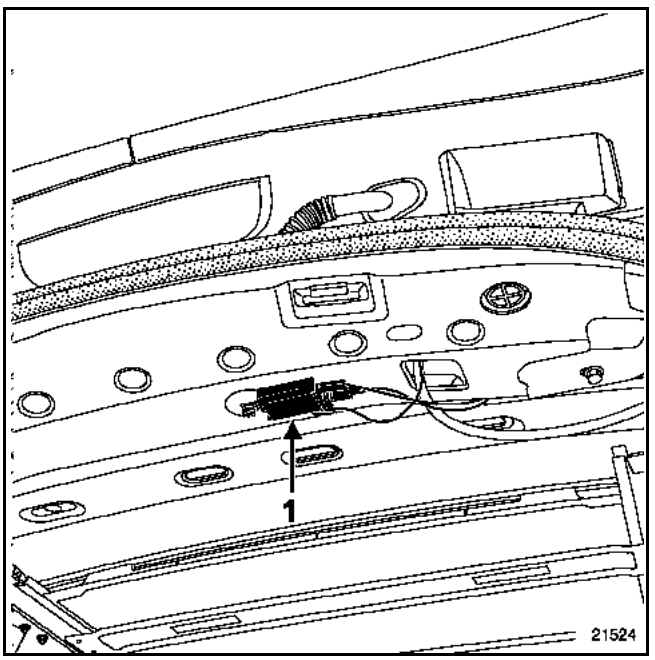

The amplifier is supplied:
– by the radio in vehicles without navigation assistance,
– by the central communications unit in vehicles fitted with navigation assistance. Refer to **section 83C "Navigation assistance"**.

The aerial rod is connected at connection plate (2).

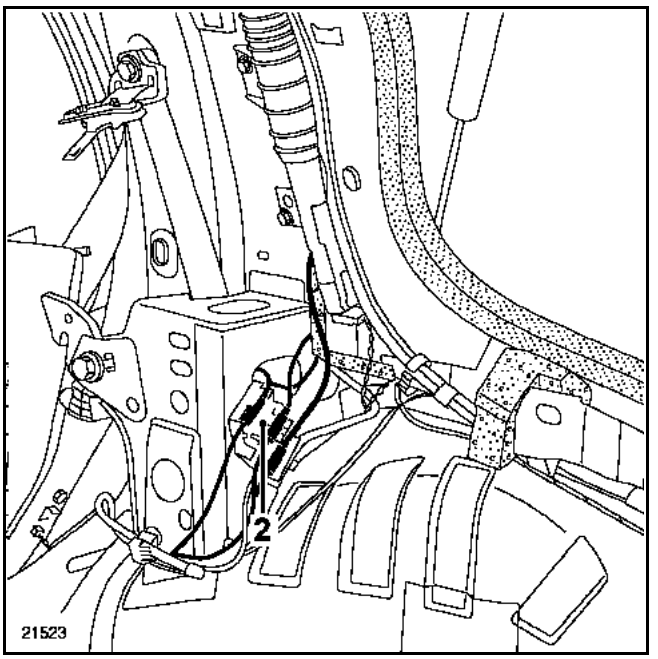

NOTE: if the vehicle is fitted with the navigation assistance system, the radio aerial is connected to the radio through the central communications unit. Refer to **section 83C "Navigation assistance"**.

GETtheMANUALS.org

The vehicles are fitted with:
- front tweeters in the dashboard,
- front door speakers,
- tweeters and speakers in the rear doors.

IMPORTANT: removal of the door speakers requires the removal of the door linings. (Refer to the **bodywork** section).

Special notes for the rear speakers

Remove:
– the speaker grille by undoing nuts (1),
– ashtray support screws (2),

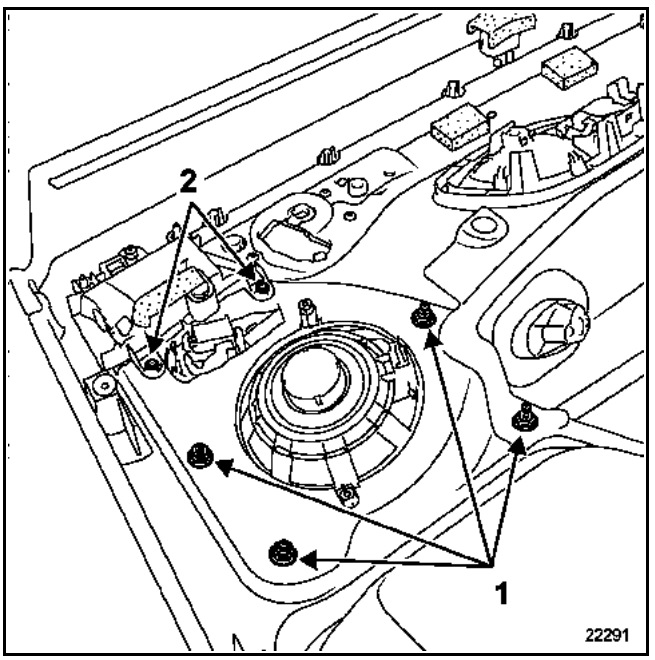

– speaker mounting screws (3).

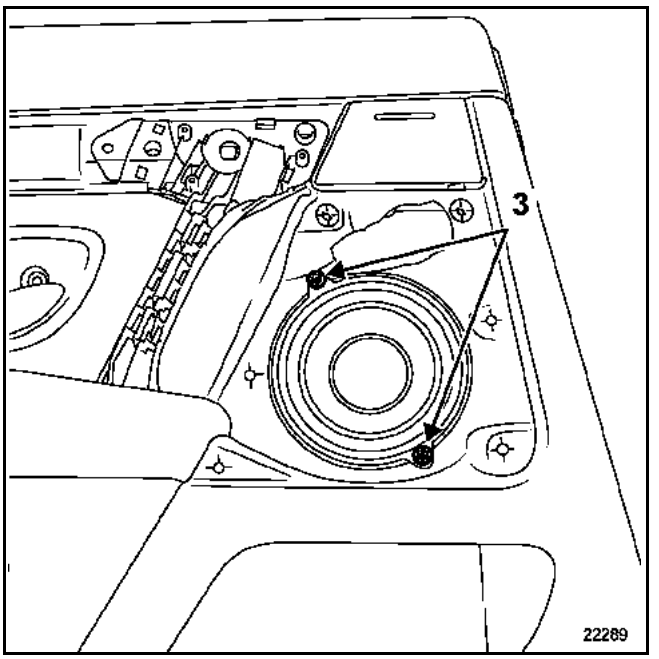

When refitting the speakers, tighten screws (1) lightly.

NOTE: the tweeter is clipped into the grille.

Special notes for the front speakers

Remove:
– the speaker grille by undoing nuts (4),
– speaker mounting screws.

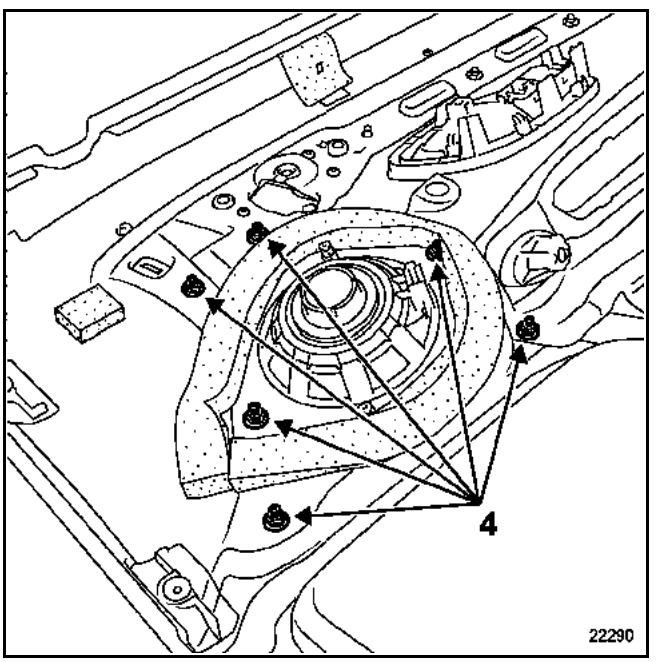

When refitting the speakers, tighten screws (4) lightly.

GETtheMANUALS.org

DESCRIPTION

The UCH is located in the dashboard on the driver's side.

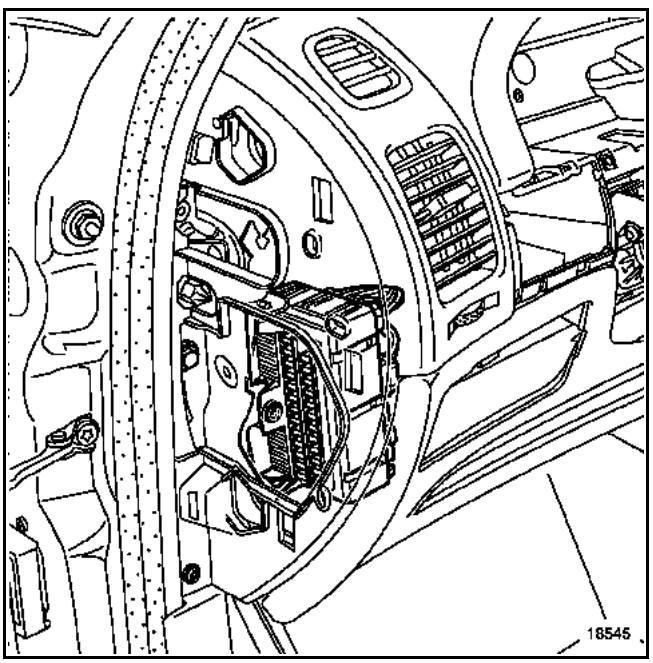

This computer contains most of the computers, including the engine immobiliser decoder.

GETtheMANUALS.org

UCH features		See section
Indicator control	X	-
Daytime running lights control	X	80
Side lights control	X	-
Bulb failure (side and brake lights) for the voice synthesiser	X	83
Automatic headlights	X	80
Rain sensor	X	85
Windscreen and rear screen wiper control	X	85
Headlight washer control	X	85
Opening element management	X	87
Opening elements management (driver's door only)	X	87
Door locking when driving/unlocking on impact	X	87
Opening element control (central locking)	X	87
Doors and window control (electric child locks)	X	87
Door opening indicator light/Electric central door locking indicator light	X	-
Electric tailgate locking control	X	-
Timed interior lighting control	X	81
Door locking indicator connection	X	87
Radio frequency remote control	X	87
Hands-free remote control	X	87
Transponder control (engine immobiliser)	X	82
Accessories relay control/+ After ignition starter	X	-
Passenger compartment buzzer	X	83
Overspeed feature (Arabia)	X	83
Engine racing	X	-
External temperature	X	-
Multifunction connections to seats and electric door mirrors	X	87
Alarm connection (retrofitted)	X	82
Variable power assisted steering	X	87
Multiplex network interface	X	88
Interface with diagnostic tool	X	88

GETtheMANUALS.org

REMOVAL

NOTE:
- It is essential to read the configurations using the diagnostic tool when replacing the UCH.
- The relay/fuse box is clipped onto the UCH. One has to be removed to remove the other.

Disconnect the battery.

Remove:
– the driver's side dashboard facing,
– the cover under the dashboard,
– the handle of the automatic parking brake fastened by bolts (A),
– the mounting for the beam height adjustment control (**clipped**),

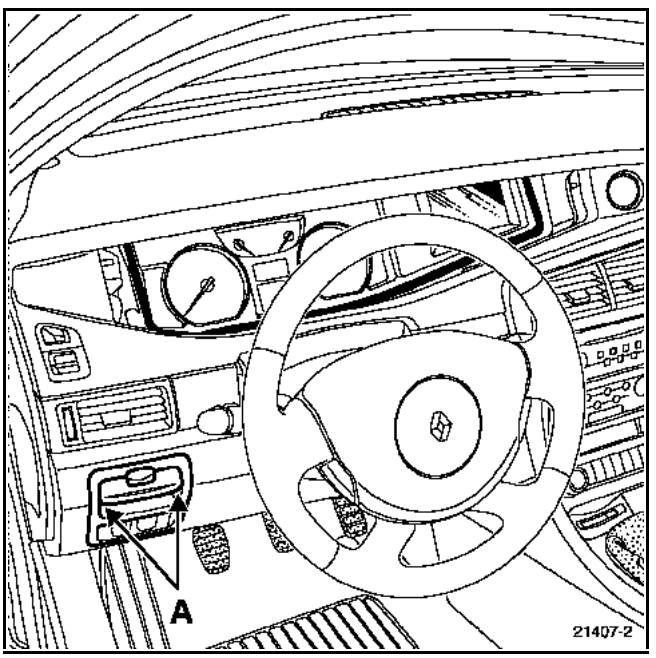

– the clutch pedal travel sensor (manual gearbox) as follows:

Disconnect the connector.

Unlock the section linked to the pedal by undoing the bolt (1) and sliding it out (2).

Unlock the sensor body by undoing bolt (3).

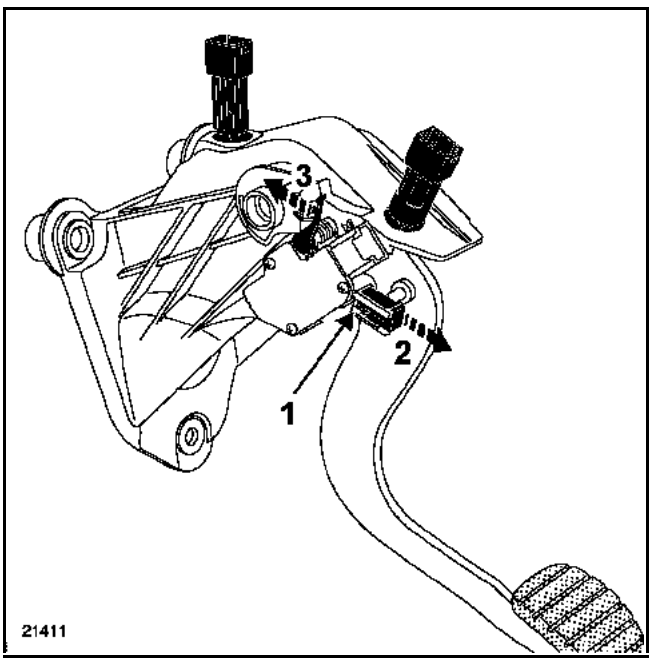

Tilt the sensor (4), taking care not to break the lower mounting bracket (5).

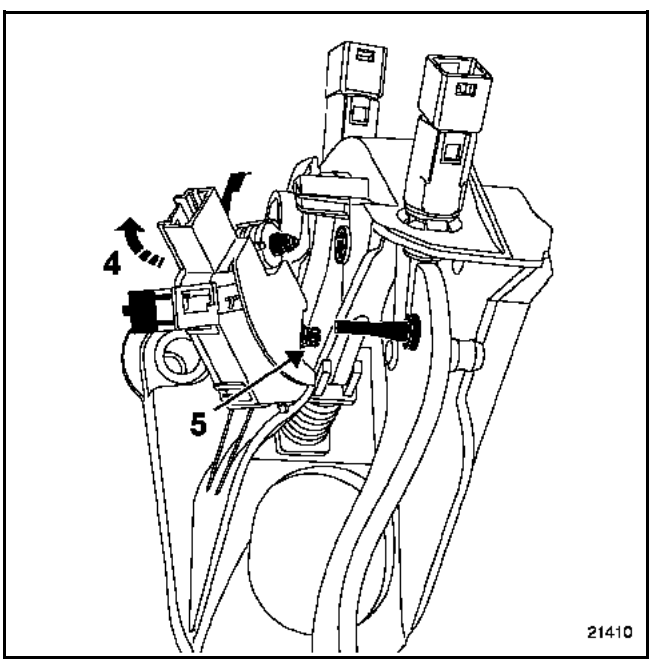

GETtheMANUALS.org

Remove mounting bolt (B) from the UCH.

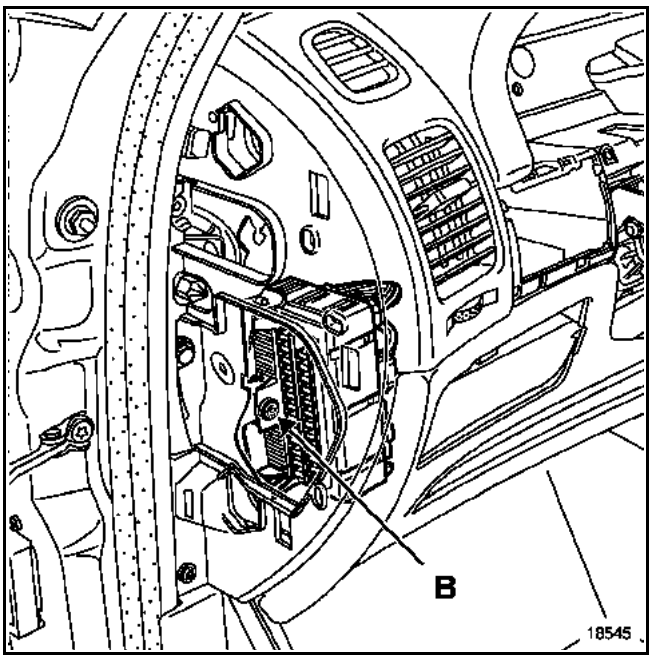

Cut wiring harness support plastic clip (C).

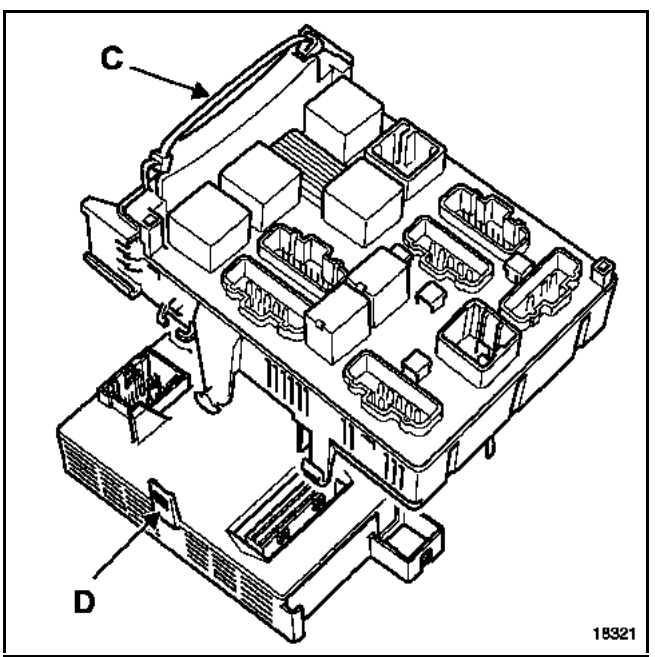

Disconnect the UCH and the passenger compartment fuse and relay box connectors.

Separate the UCH and the fuse and relay box by pressing on the locks (D).

REFITTING

Reconnect the wires and fit a large clip (C) to retain the harness firmly in place.

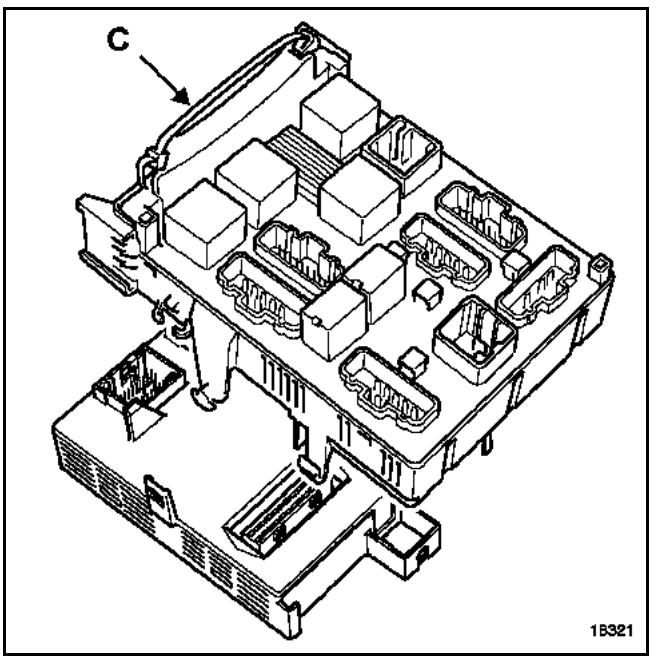

Next, program the codes for the vehicle and for the RENAULT Card, and configure the UCH according to the options.

GETtheMANUALS.org

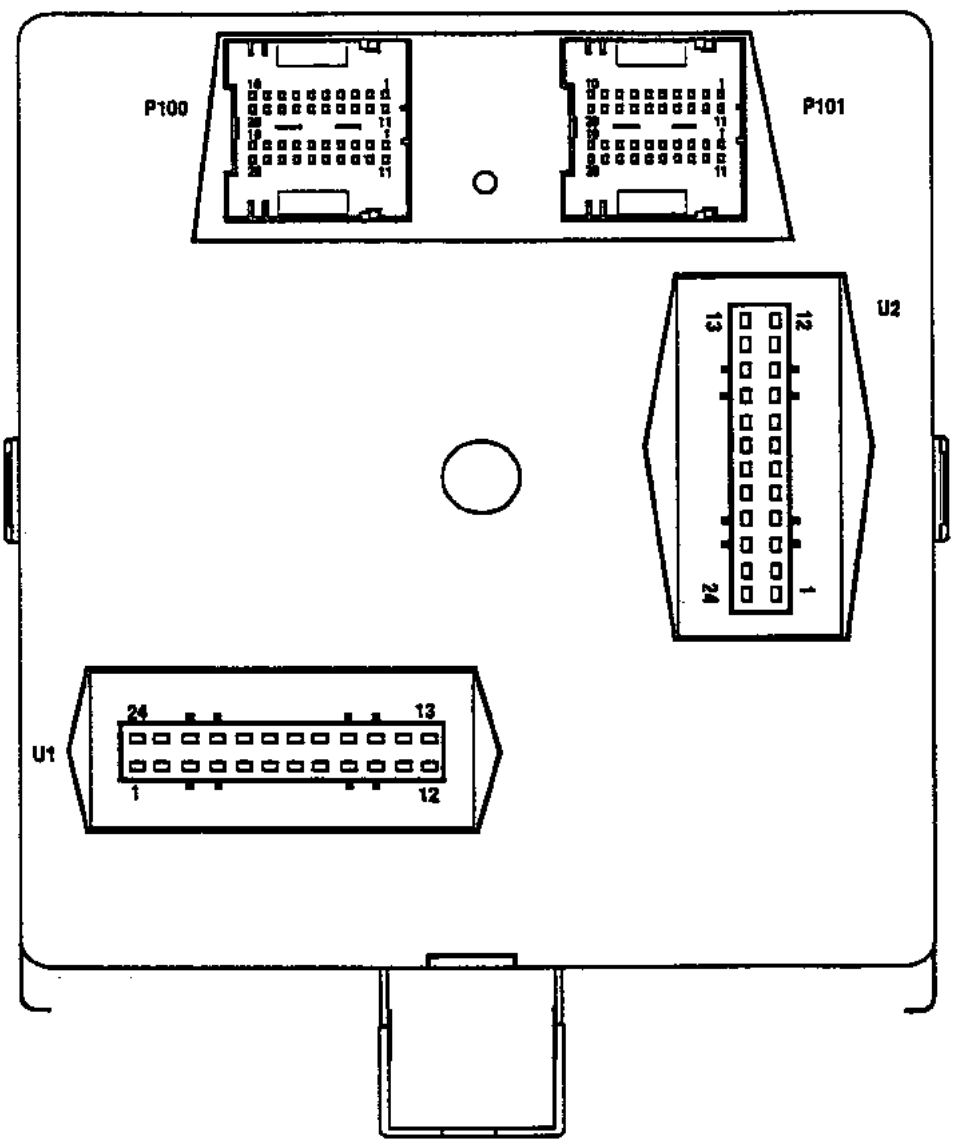

SE2046

GETtheMANUALS.org

ALLOCATION (DEPENDING ON EQUIPMENT LEVEL)

P100 (40-track connector)

BROWN

Track	Description
1	Signal + RENAULT Card fully inserted into the reader (input)
2	Timed central flasher input
3	Engine running indicator light output
4	Rear electric window locking input
5	Front high speed wiper input
6	RENAULT Card reader (input)
7	Signal + manual gearbox in neutral
8	Control + reversing lights
9	Electric central door closing/locking input
10	Front low speed windscreen wipers input
11	Start-up indicator light output
12	Not in use
13	Fault finding line K signal
14	External temperature input
15	Front windscreen wiper low speed input
16	Boot lighting input
17	Electric central door opening/locking input
18	Tyre pressure radio frequency signal
19	RENAULT Card reader (output)
20	Engine start/stop button input

GREEN

Track	Description
21	Electric central door locking output (indicator light)
22	Anti-pinch sunroof and electric window output
23	Rain sensor input
24	Rear screen wiper timer input
25	Rear screen washer control input
26	Clutch contact input
27	Air conditioning control panel input
28	Driver's door handle opening sensor input
29	Right-hand rear door handle opening sensor
30	Multiplex connection (CAN H)
31	Interior lighting output
32	Windscreen wiper start/stop rain sensor input
33	Passenger door handle sensor input
34	Not in use
35	Windscreen washer control input
36	Right-hand side indicator input
37	Left-hand side indicator input
38	Rear screen wiper park position input
39	Not in use
40	Multiplex connection (CAN L)

GETtheMANUALS.org

ALLOCATION (DEPENDING ON EQUIPMENT LEVEL)

P101 (40-track connector)

BROWN

Track	Description
1	Multiplex connection (L)
2	Variable power assisted steering motor output
3	Variable power assisted steering motor output
4	Right-hand rear central door deadlocking input
5	Door handle sensor maintenance output
6	Not in use
7	Right-hand rear door switch input
8	Tailgate lock input
9	Electric steering column lock output
10	Not in use
11	Multiplex connection (H)
12	Presence of card (RENAULT Card reader) input
13	Variable power assisted steering motor output
14	Immobiliser warning light output
15	Left-hand rear door switch input
16	Driver's door switch input
17	Right-hand side indicator output
18	Variable power assisted steering motor output
19	Left-hand side indicator ouput
20	Passenger door switch input

GREEN

Track	Description
21	Left-hand rear door central locking input
22	Horn input
23	Left-hand rear door handle opening sensor
24	Child safety indicator output
25	Tailgate electric striker input
26	Not in use
27	Not in use
28	Not in use
29	Side lights relay for daytime running lights output
30	Dipped beam headlights relay for daytime running lights output
31	Not in use
32	Multiplex seat position memory and multiplex ECU passenger door output
33	Not in use
34	Tailgate electric striker output
35	Not in use
36	Driver's seat position memory output
37	Not in use
38	Not in use
39	Not in use
40	Headlight washer pump output

GETtheMANUALS.org

ALLOCATION (DEPENDING ON EQUIPMENT LEVEL)

U1 (24-track connector)

Track	Description
1	Electric central door locking output
2	Electric central door locking output
3	Front left-hand side light shunt input
4	Not in use
5	Front right-hand side light shunt input
6	Number plate lighting shunt input
7	Right-hand side light fuse failure input
8	Left-hand side light fuse failure input
9	Not in use
10	Dipped headlight input
11	Rear right-hand side light shunt input
12	Not in use
13	Not in use
14	Electronic relay and fuse box supply input
15	Not in use
16	Stop lights failure input
17	Left rear side light shunt input
18	Not in use
19	Left brake light shunt input
20	Electric central door locking output
21	Right brake light shunt input
22	Brake light switch input
23	Electric central door locking output
24	Electric central door locking output

U2 (24-track connector)

Track	Description
1	Rear screen wiper relay output
2	+ after ignition relayed input (data processing key)
3	+ after ignition pause relayed input (data processing key)
4	+ after ignition relayed output (data processing key)
5	Electric central door locking supply input
6	Not in use
7	Not in use
8	Electric central door locking relay output (opening)
9	Relay plate 2 output
10	Electric central door locking relay output (closing)
11	Relay plate 1 output
12	Indicator input
13	UCH earth
14	Not in use
15	Left-hand side indicator control output
16	Indicator fault finding input
17	Right-hand side indicator control output
18	Windscreen wiper (high and low speed) relay output
19	Indicator supply input
20	Windscreen wiper start/stop relay input
21	Starter inhibition relay output
22	Side lights input
23	Timed supply relay output
24	UCH supply input

GETtheMANUALS.org

REPLACEMENT AND CONFIGURATION OF THE UCH

A new UCH is not programmed with a code. You must therefore program a code into a new UCH fitted to a vehicle to make the UCH operational.

You must have at least one of the old RENAULT Cards for the vehicle, plus the repair code, and the injection computer must be correctly coded before you can perform this procedure.

WARNING: if a code is programmed into the UCH, it is assigned to the vehicle and it is impossible to clear the code or program another one.

IMPORTANT: only RENAULT Cards submitted during this procedure will work if:
– they have already been coded on this vehicle,
– or they are new (not coded).

UCH PROGRAMMING PROCEDURE

- Establish dialogue with the **Immobiliser** system.
- In the **Command**, **Specific command** menu, select and confirm **SC027: program UCH** line.
- The tool displays **Please enter the After-Sales code**.
  With no RENAULT card in the reader, enter the secret After-Sales code (12 hexadecimal characters) and confirm it.
- The tool displays **Insert a card which has already been programmed for the vehicle**. The programming procedure will now be performed.
- The tool displays **UCH programmed**; the UCH is coded. You must now enter RENAULT Card programming mode to assign the other cards (maximum of four). Several seconds may elapse before this message appears.

WARNING: the maximum time between each operation is **5 minutes**, otherwise the procedure will be cancelled and the tool will display the message **Procedure interrupted: warning, the cards assigned to the vehicle are the ones assigned before the procedure was performed. The cards submitted before interruption of the procedure are no longer blank and can only be assigned to this vehicle**. This message also appears where dialogue with the UCH is lost or the battery power supply fails.

SPECIAL CASES

If the screen displays:

- "**Remove the card from the reader**", a card is already present in the reader,
- **Check the After-Sales code and ensure that the card belongs to the vehicle**: the code has not been read correctly or the UCH has already been coded on another vehicle. Check the code then try entering the data again.
- **Do you want to check the cards before assigning them to the vehicle?**: the UCH is already programmed on this vehicle and the UCH suggests reassigning the RENAULT Card.
- **Card cannot be used on this vehicle**: the card code does not correspond to the current vehicle.
- "**The card inserted is blank. Please insert another card which has already been programmed on the vehicle**": insert a card which has already been coded.
- **UCH Programming failure**: repeat the whole procedure.

WARNING: when a UCH has been programmed with the RENAULT Card code, it is impossible to clear it or to store another code in its place.

GETtheMANUALS.org

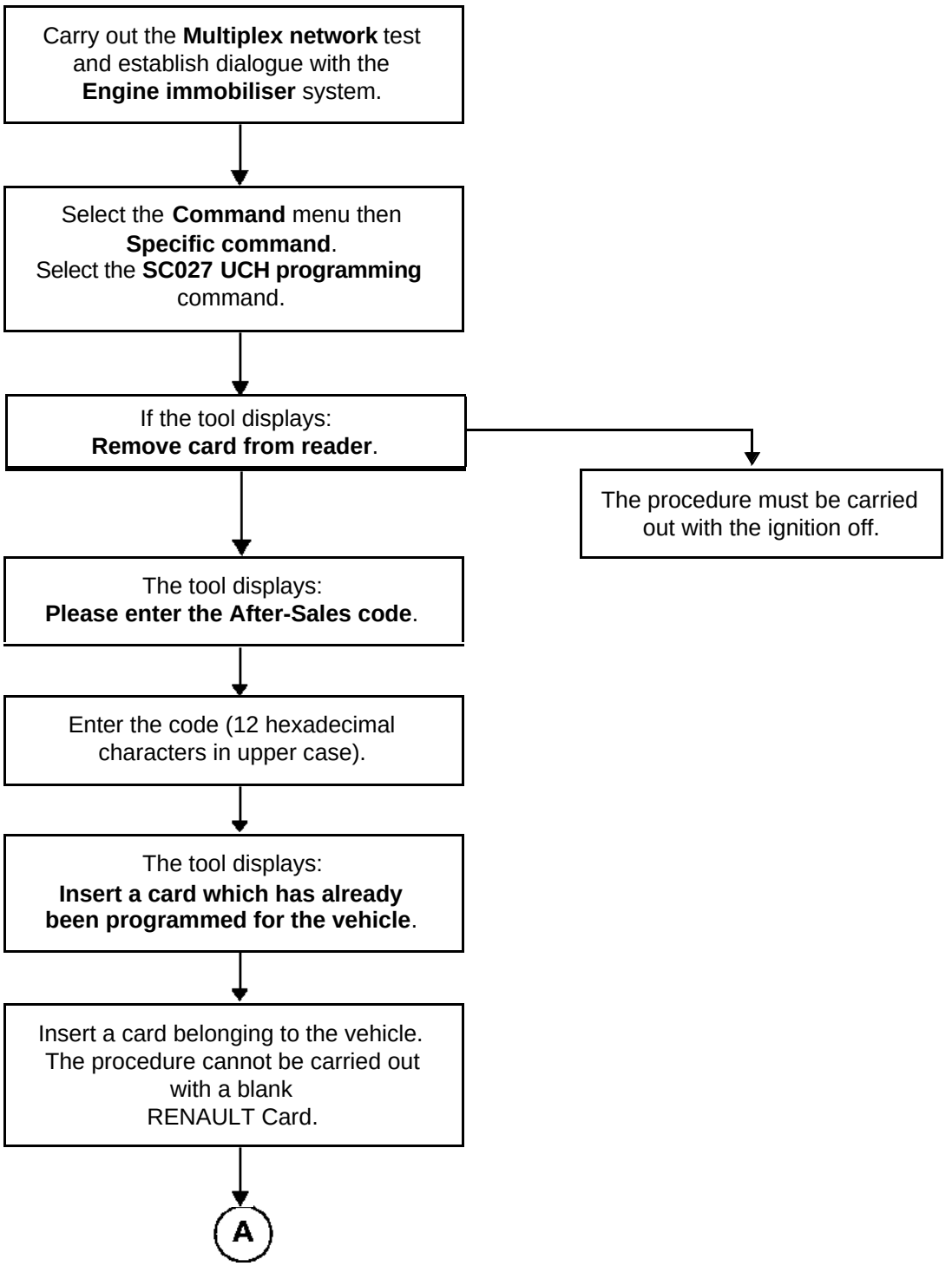

GETtheMANUALS.org

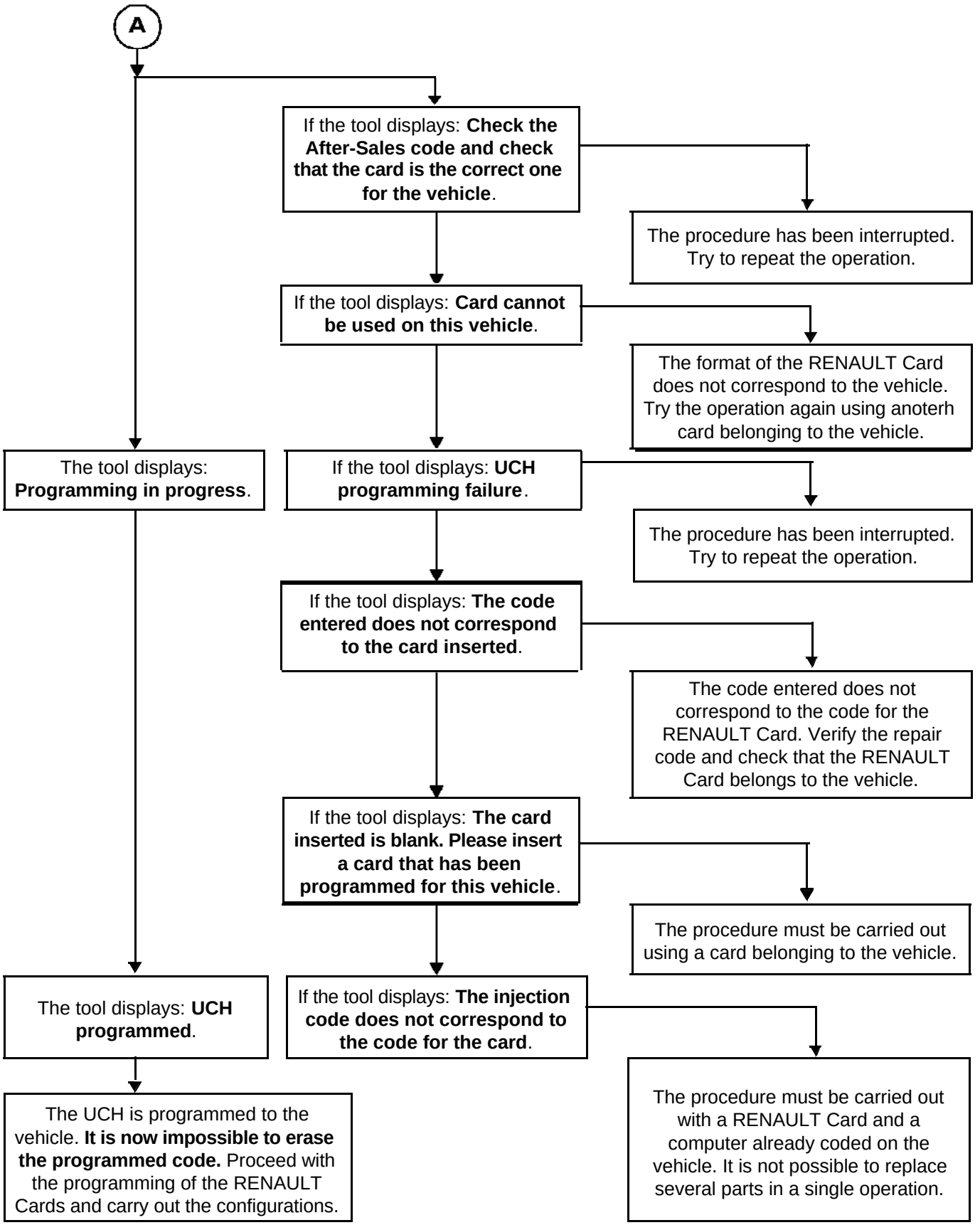

GETtheMANUALS.org

RENAULT CARD ASSIGNMENT PROCEDURE

NOTE: it is possible to find out whether a RENAULT Card is blank or not by means of the **ET115: blank card** state.

IMPORTANT: in the event that not all the RENAULT Cards are available, it will be necessary to carry out a subsequent reassignment procedure using all the cards.

- Confirm the **SC001: Card programming** line in the **Specific command** item of the **Command** menu.

- The screen displays **Do you want to check the cards before assigning them to the vehicle?**

- If you want to check the cards, the tool displays **Insert the card fully into the reader**. Insert a RENAULT Card until the ignition is switched on:
  – If the assignment is not possible, the screen displays **Verify the After-Sales code and make sure the card belongs to the vehicle**. Insert another card.
  – If the card is accepted, the screen displays **Remove the card from the reader**.

- The tool displays **Insert the card fully into the reader**. Insert a RENAULT Card in the reader and confirm:
  – If the RENAULT Card is not accepted, the red indicator light remains off.
  – If the RENAULT Card is accepted, the red indicator light flashes rapidly and the tool displays **1 card programmed** then **Remove the card from the reader**.

- The tool displays **Insert the card fully into the reader**. Insert a second RENAULT Card until the ignition is switched on:
  NOTE: If the same RENAULT Card is inserted twice, the system does not acknowledge this and the immobiliser indicator light remains off.

- Insert the RENAULT Card or the other Cards to be assigned to the vehicle in the Card reader (maximum of 4). The screen displays **2, 3 or 4 cards programmed** then **Remove the card from the reader**.

WARNING: these must be previous RENAULT Cards for the vehicle or new **uncoded** RENAULT Cards.

NOTE: the vehicle can only accept a single RENAULT Card with the hands-free function. If a second RENAULT Card is assigned to the vehicle, it will function as an ordinary RENAULT Card.

WARNING: the maximum time between each operation is **2 minutes**, otherwise the procedure will be cancelled and the tool will display the message **Procedure interrupted: warning, the cards assigned to the vehicle are the ones assigned before the procedure was performed. The cards submitted before interruption of the procedure are no longer blank and can only be assigned to this vehicle**. This message also appears where dialogue with the UCH is lost or the battery power supply fails.

- **Configure the UCH according to the vehicle options and equipment**.

NOTE: there is no operation to perform on the injection computer when the UCH only is replaced, it retains the same immobiliser code.

GETtheMANUALS.org

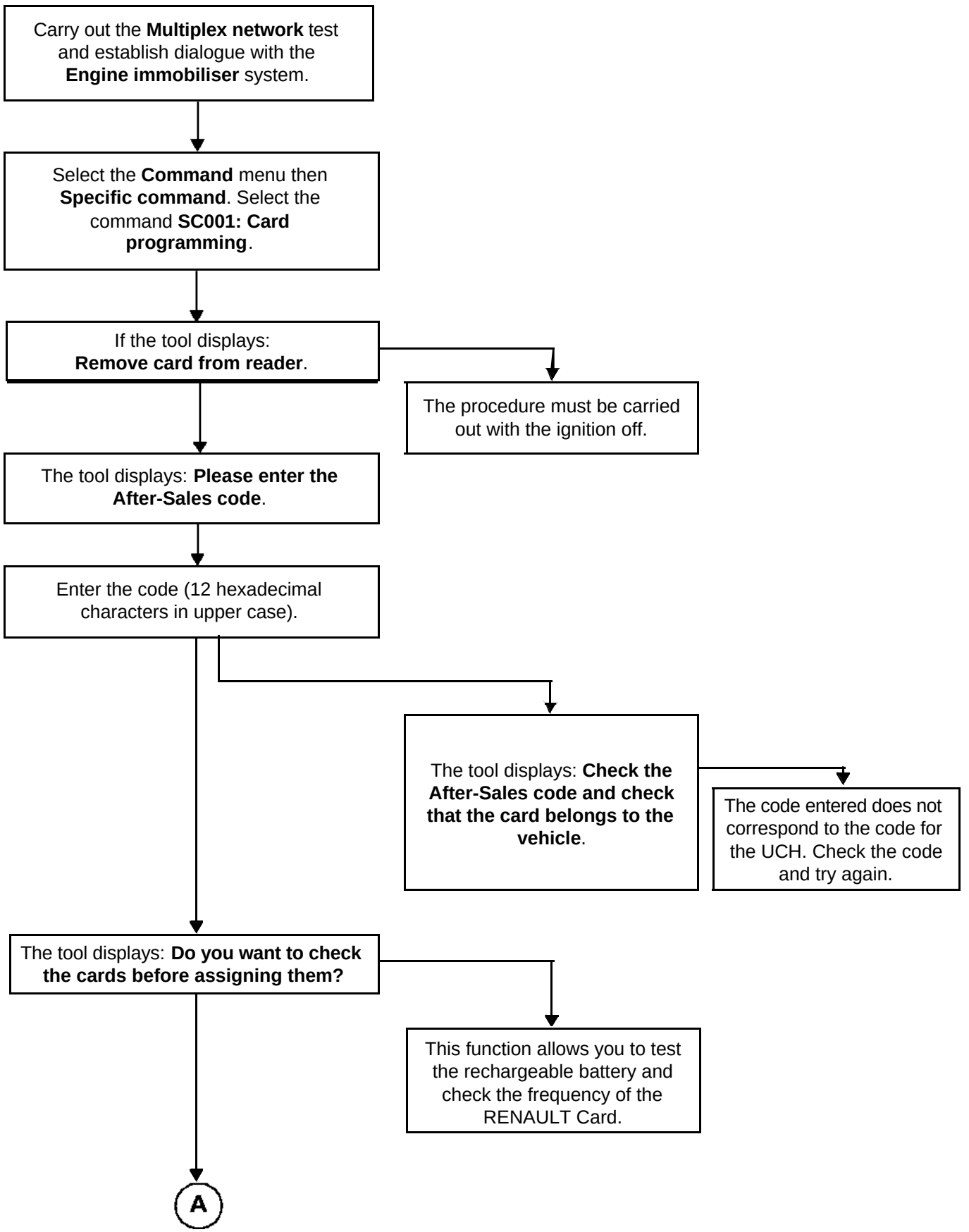

GETtheMANUALS.org

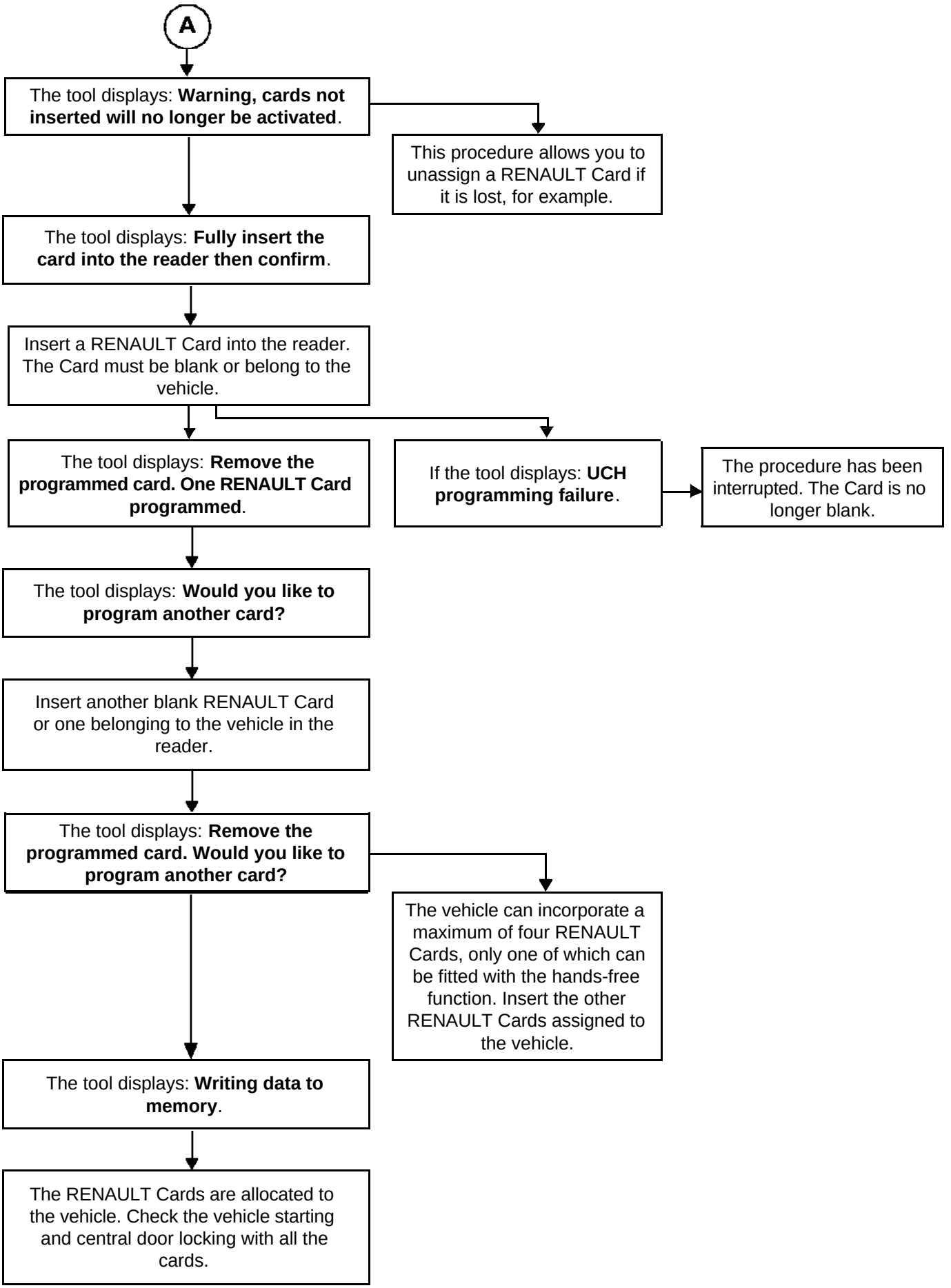

GETtheMANUALS.org

The configuration options for the UCH are:

Name of the function	Position in the diagnostic tool	Configuration as delivered
Hands-free function (CF 001/002)	door management (LC 001)	none
Seat position automatic recall (CF 003/004)	door management (LC 002)	with
Deadlocking of doors (CF 005/006)	door management (LC 003)	none
Electric child safety (CF 007/008)	door management (LC 004)	none
Central closing of the windows (CF 009/010)	door management (LC 005)	none
Interior lighting (CF 013/014)	door management (LC 007)	none
Courtesy light timer (CF 015/016)	door management (LC 008)	none
Locking using the hands-free function (CF 019/020)	door management (LC 010)	with
Automatic door locking warning beep (CF 035)	door management (LC 011)	none
Automatic door locking while driving (CF 028/029)	door management (LC 012)	with
Doors unlocked (CF 030/031)	door management (LC 013)	4 doors
Doors unlocked in hands-free mode (CF)	door management (CF 014)	4 doors
Driving style (CF 018/019)	door management (LC 069)	left
Automatic gearbox (CF 703/704)	immobiliser (LC 040)	none
Card jammed (CF 709/710)	immobiliser (LC 041)	none
Card left in reader warning (CF 711/712)	immobiliser (LC 042)	with
Overspeed alarm (Arabia) (CF 618/619)	passenger compartment connection unit (LC 048)	none
Daytime running lights (CF 600/601)	passenger compartment connection unit (LC 049)	none
Voice synthesiser (CF 694/695)	passenger compartment connection unit (LC 050)	none
Rain sensor (CF 696/697)	passenger compartment connection unit (LC 051)	with
Steering strategy number (CF 076/083)	power assisted steering (LC 002)	n°3
Variable power assisted steering (CF 074/075)	variable power assisted steering (LC 001)	normal

WARNING: some configuration errors, such as the wrong gearbox type, can prevent the engine from starting.

GETtheMANUALS.org

Name of the function	Position in the diagnostic tool	Configuration as delivered
Automatic headlight illumination (CF 724)	passenger compartment connection unit (LC 059)	none
Lighting extension (CF 723)	passenger compartment connection unit (LC 058)	none
Hazard warning lights under emergency braking (CF 772)	passenger compartment connection unit (LC 84)	with
Driving position memory (CF 036)	passenger compartment connection unit (LC 015)	none

GETtheMANUALS.org

POWER ASSISTED STEERING CONFIGURATION

Using the diagnostic tools

- Establish dialogue with the vehicle and run the **Multiplex network** test
- Select and confirm the **Variable power assisted steering** menu
- In the **Command** menu, select and confirm the **Configuration** line,
- Presence of variable power assisted steering:
  – **CF 075: with variable power assisted steering**
  – **CF 074: with normal power-assisted steering**
- Configuration of type of variable power assisted steering (VEL SATIS):
  – **CF 078: strategy number 3**
- Confirm the configurations on the **Command** menu, **Reading configuration**

CONFIGURATION OF DOOR MANAGEMENT

Using the diagnostic tools

- Establish dialogue with the vehicle and run the **Multiplex network** test
- Select and confirm the **Door management** menu
- In the **Command** menu, select and confirm the **Configuration** line,
- Operation of hands-free function:
  – **CF 001: with hands-free function**
  – **CF 002: without hands-free function**
- Operation of hands-free locking function:
  – **CF 019: with hands-free locking**
  – **CF 020: without hands-free locking**
  This configuration allows the hands-free function to be used for unlocking the vehicle only.
- Automatic door locking warning beep:
  – **CF 035: tone n° 1 to n° 5**
  This configuration allows the doors locked beep using the hands-free function to be changed or cancelled.
- Configuration of the deadlocking function
  – **CF 005: with deadlocking**
  – **CF 006: without deadlocking**
  For right-hand drive vehicles fitted with specific door cabling, this configuration allows the internal handles to be released by pressing on the remote control unit twice.

GETtheMANUALS.org

- Configuration of electric child safety:
  - **CF 007: with electric child safety**
  - **CF 008: without electric child safety**

  This configuration allows, depending on the version, disablement of the operation of the rear windows from the rear seats and the release of the internal handles.

- Configuration of closure of the windows by means of a long press on the remote control unit. To operate, the vehicle must be fitted with one-touch (anti-pinch) windows:
  - **CF 009: with central closing of the windows**
  - **CF 010: without central closing of the windows**

- Configuration of automatic door locking while driving:
  - **CF 028: Authorise automatic door locking while driving**
  - **CF 029: Inhibit automatic door locking while driving**

  This configuration allows the operation of automatic locking while driving. Unlocking occurs as soon as the **impact signal** is received from the airbag computer.
  Activate or deactivate this function from the passenger compartment with the centralised door locking button.

- Configuration of interior lighting when a door is opened:
  - **CF 013: with interior lighting**
  - **CF 014: without interior lighting**

- Configuration of interior timed lighting when the doors are closed:
  - **CF 015: with courtesy light timer**
  - **CF 016: without courtesy light timer**

- Configuration of country of use:
  - **CF 018: left-hand drive**
  - **CF 017: right-hand drive**

  This configuration allows operation of the **deadlocking** and the **open door only** functions.

- Driver's seat position memory:
  - **CF 036: with/without**

- Configuration of the driver's seat position memory function:
  - **CF 003: seat position automatic recall**
  - **CF 004: without seat automatic recall**

- Configuration of **open door only**:
  - **CF 030: unlocking of all four doors**
  - **CF 031: driver's door unlocking**

  This configuration allows the driver's door and boot lid only to be unlocked on right-hand drive versions when the vehicle is unlocked (normal or hands-free). Press again to unlock the other opening elements.

- Configuration of **open door only** with the hands-free function:
  - **CF 032: hands-free unlocking of the four doors**
  - **CF 027: driver's hands-free unlocking**

  This configuration is identical to the previous configuration for the hands-free function.

- Confirm the configurations on the **Command** menu, **Reading configuration**

GETtheMANUALS.org

WARNING: certain configuration errors, such as the wrong transmission type, can prevent the engine starting.

CONFIGURATION OF THE CONNECTION UNIT

Using the diagnostic tools

- Enter into dialogue with the vehicle and run the **Multiplex network** test
- Select and confirm the **Connection unit** menu
- Confirm the **Computer configuration** line in the **Command** menu.
- Configuration of overspeed:
  - **CF 618: without overspeed (Arabia)**
  - **CF 619: with overspeed (Arabia)**
- Configuration of daytime running lights:
  - **CF 600: without daytime running lights**
  - **CF 601: with daytime running lights**
- Configuration of voice synthesiser:
  - **CF 694: with voice synthesiser**
  - **CF 695: without voice synthesiser**
- Configuration of rain sensor:
  - **CF 696: with rain sensor**
  - **CF 697: without rain sensor**
- Automatic headlights:
  - **CF 724: with / without**
- Lighting extension:
  - **CF 723: with / without**
- Emergency braking hazard warning lights:
  - **CF 772: with / without**
- Confirm the configurations by selecting **read configuration** in the **command** menu.

CONFIGURATION OF THE ENGINE IMMOBILISER

Using the diagnostic tools

- Enter into dialogue with the vehicle and run the **Multiplex network** test
- Select and confirm the **Engine immobiliser** menu
- Confirm the **Computer configuration** line in the **Command** menu.
- Configuration of gearbox type:
  - **CF 703: with automatic gearbox**
  - **CF 704: without automatic gearbox**
- Configuration of RENAULT Card lock in the reader (only for automatic gearbox version):
  - **CF 709: with card lock**
  - **CF 710: without card lock**
- Configuration of the reminder warning that the RENAULT Card is still in the reader after stopping the engine:
  - **CF 711: with card reminder warning**
  - **CF 712: without card reminder warning**
- Confirm the configurations on the **Command** menu, **Reading configuration**

GETtheMANUALS.org

The system fitted to the keyless vehicle consists of:

– the UCH,
– an uncoded card reader (radio frequency receiver and transponder),
– a push-button to start and stop the engine,
– the steering column lock which mechanically locks the steering wheel,
– door locking / unlocking motors,
– RENAULT Cards comprising two or three buttons (hands-free version),
– two special transmission aerials (communication) to the RENAULT Card with the hands-free version (depending on the version),
– specific exterior door handles for the hands-free option (depending on vehicle version),
– inside door locks specific to the deadlocking function (depending on the version).

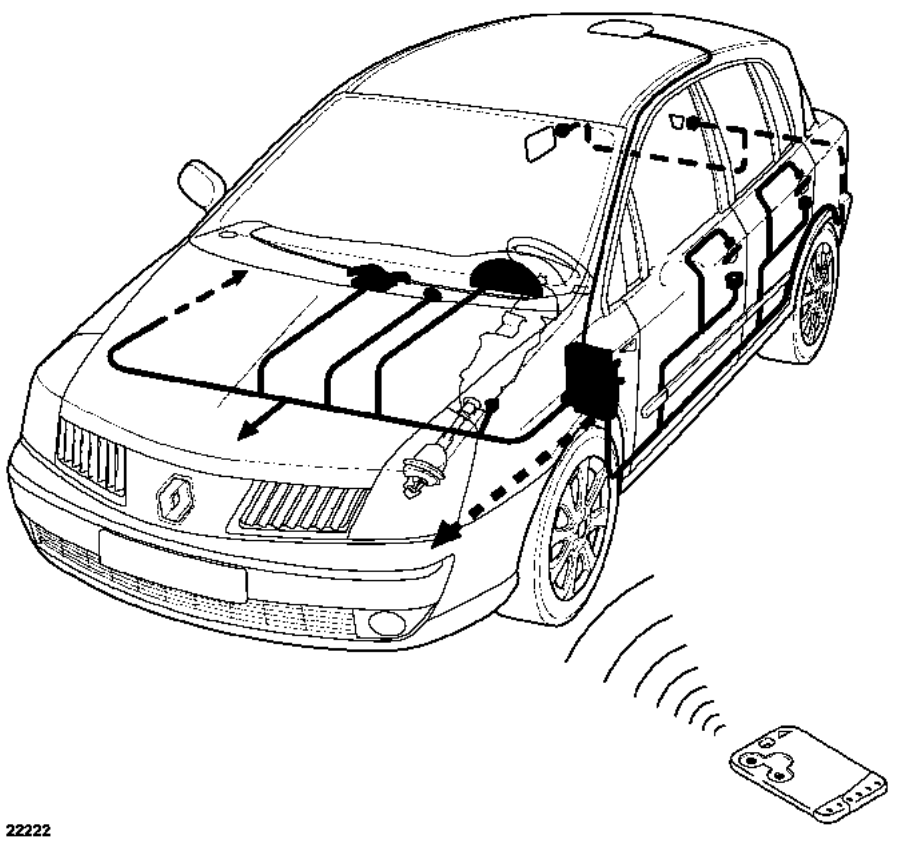

22222

GETtheMANUALS.org

DESCRIPTION

Two RENAULT Cards are assigned to the vehicle in the factory. Depending on its equipment level, the vehicle may be supplied with:

- **two RENAULT Cards with two buttons (without hands-free system)** fitted with:
  - a coded chip which works without a battery and operates the immobiliser (refer to **Section 82**),
  - a plip remote control unit which operates the locking and unlocking of the doors.

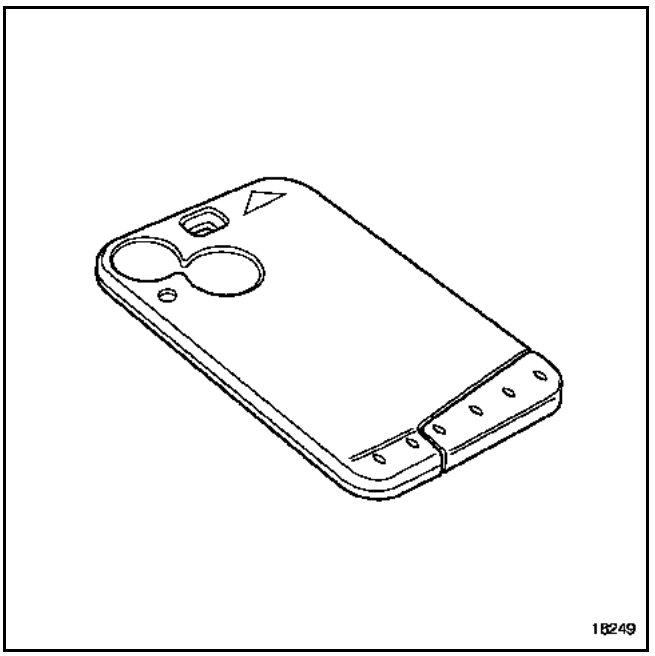

The radio frequency code transmitted by these RENAULT Cards is continuously changed to avoid possible copying.

With this system, the remote control units are resynchronised automatically.

The remote control unit is only used for locking and unlocking the doors (it has no effect on the immobiliser).

NOTE: the UCH can manage four different codes (maximum of four RENAULT Cards).

- **two RENAULT Cards, one of which is fitted with a hands-free system (three buttons)**. This system allows the opening surfaces to be opened without action on the remote control unit. (It is not possible to fit a vehicle with several hands-free remote control units, see the **Hands-free RENAULT Card** section).

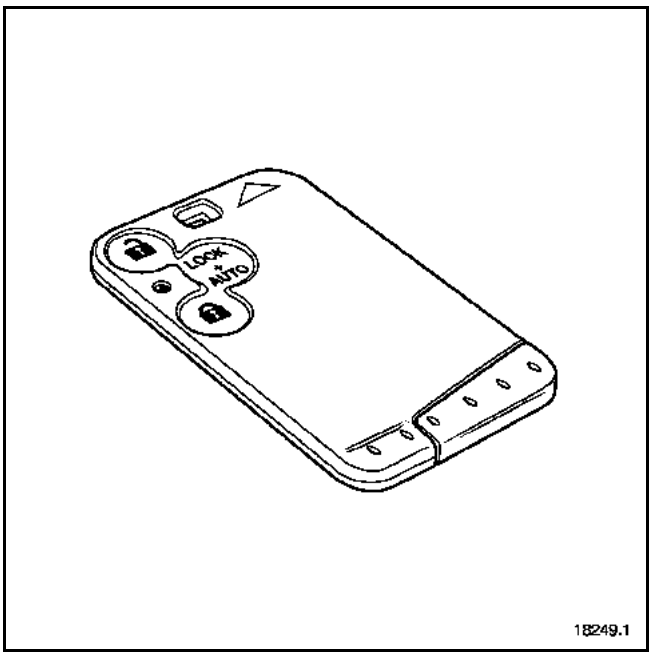

NOTE: if the vehicle battery charge is low, it is not possible to unlock the steering column lock. It is not possible to push-start the vehicle.

GETtheMANUALS.org

RENAULT Cards are fitted with a backup key (1) enabling the door to be opened in the event of an operating fault.

Replacement RENAULT Cards are supplied non-coded and without an emergency metal key.

The rechargeable battery for the hands-free function is charged. A green cover is fitted in the place of the backup key.

When replacing a RENAULT Card it is necessary to replace the green cover with the customer's backup key and to fit the green cover on the faulty RENAULT Card when returning it for analysis.

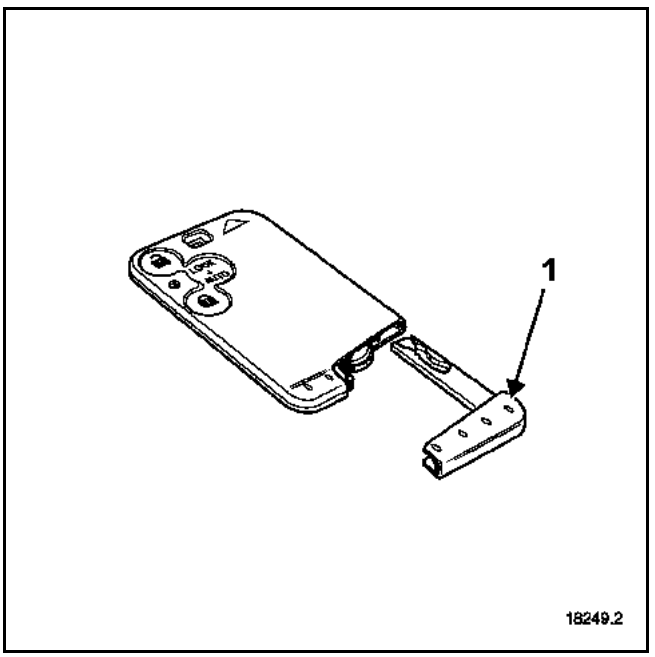

NOTE: a backup key can be ordered at Parts Stores by quoting the vehicle security number.

IMMOBILISER SYSTEM USING A TRANSPONDER

The immobiliser system using a transponder incorporated in the RENAULT Card unlocks the steering lock, switches on the ignition and authorises starting of the vehicle.

The RENAULT Card is recognised by the receiver integrated into the reader when the card is inserted (see **Section 82: Immobiliser**).

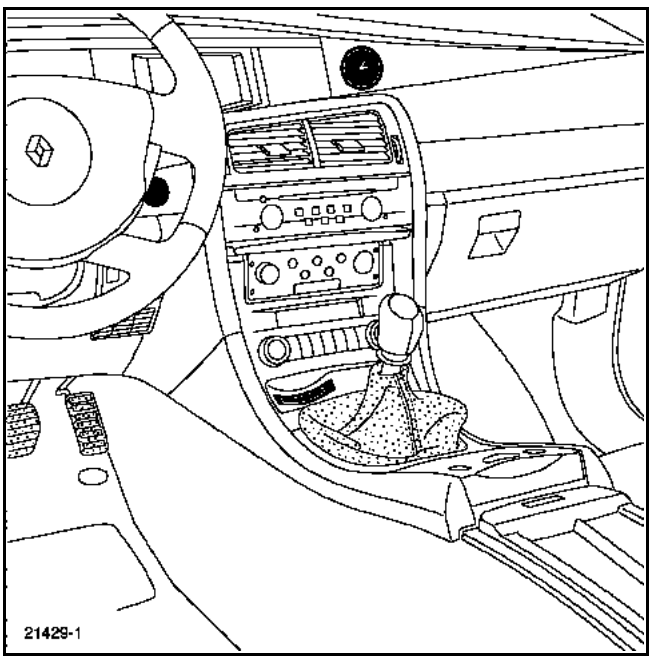

GETtheMANUALS.org

OPERATION: SWITCHING ON THE IGNITION AND STARTING

The RENAULT Card reader has two positions:

- the **+ accessories** position via the accessories relay (when the RENAULT Card is about half-way in). The + acessories position supplies:
  – the radio,
  – the electric windows,
  – the passenger compartment fan,
  – the electric seats.

  NOTE: the supply to the accessories relay is cut off during the starting phase. If the RENAULT Card is inadvertently left in the reader, supply to the accessories relay is cut after a delay of about 40 seconds.

- the **after ignition feed** position. This position authorises starting of the engine via the push-button.

  The after ignition relay is supplied as soon as the RENAULT Card is fully inserted into the reader, provided the card is identified by the UCH and the steering lock is unlocked.

  Supply to the relay is cut as soon as the **pressure button** is pressed to stop the engine, if the vehicle speed is zero (see the **Engine start pressure button section**) or after a delay of 40 minutes without the engine having been started.

- the engine start push-button supplies the starter motor until it receives the **engine running** signal. If the vehicle does not start, the supply to the starter motor is cut after a delay which varies according to the coolant temperature.

  For engine starting to be authorised, certain conditions must be met (see the **Engine start pressure button section**).

  NOTE: the RENAULT Card is locked in the reader when the engine is running. It is unlocked when the engine is stopped, if the vehicle speed is zero or nearly zero.

GETtheMANUALS.org

OPERATION OF SIMPLE REMOTE CONTROL UNITS (WITHOUT HANDS-FREE SYSTEM)

In operation, this system uses:
– a RENAULT Card (A),
– a radio receiver integrated into the RENAULT Card reader (B),
– an electronic controller integrated into the UCH (C),
– an engine start push-button (D),
– the door locks,
– a red 'door locked' warning light,
– the vehicle direction indicators,
– the injection computer (E),
– the clutch pedal sensors (F) and gearbox neutral position sensors,
– the electric steering lock (G).

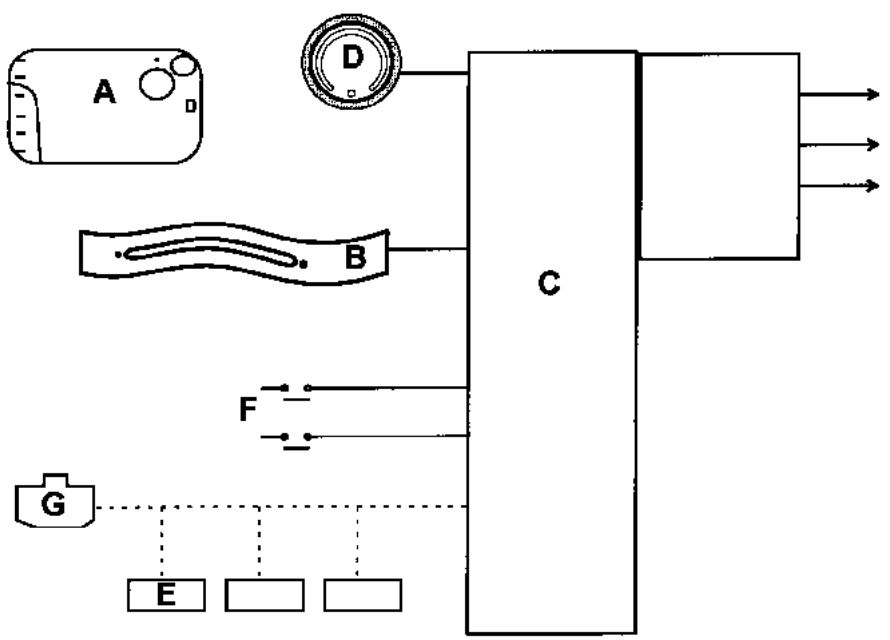

19242

GETtheMANUALS.org

The simple RENAULT Card has two buttons:
– a locking button (1),
– an unlocking button (2).

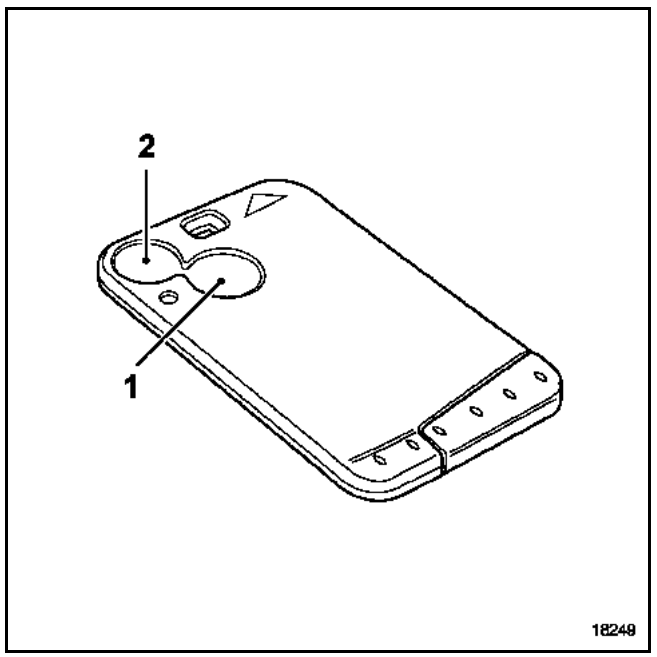

Press the **Lock** button to lock the vehicle doors.
The locking of the doors by remote control may be indicated by flashing of the hazard lights (provided all the doors are closed properly). The red locking warning light is illuminated.
If one or more of the doors is not locked properly, the hazard lights remain off after remote control locking.

To unlock the vehicle doors, press the Unlock button.
Unlocking of the doors may be indicated by a flash of the hazard lights.

NOTE: The UCH controls the hazard warning lights flashing when the remote control unit is requested (refer to the **Indicators section**).

NOTES:

- The central door locking button is blocked once the doors have been locked by the remote control.
- Certain vehicles (right-hand drive version) are fitted with a **deadlocking** function which locks the doors in such a way as to prevent them being opened from inside the vehicle. To deadlock the vehicle, press twice in succession or press and hold the **Lock** button (1). This function uses additional specific locking motors.
- Right-hand drive vehicles may be fitted with **driver's door unlocking only**. This function allows the driver's door only to be unlocked when the RENAULT Card is pressed briefly. The button must be pressed twice in succession to unlock all the doors.
- For vehicles fitted with one-touch electric windows or an electric sunroof, pressing and holding the **Lock** button (1) will lock all the opening elements (these must have been initialised).
- If a door is not properly shut when the **Lock** button is pressed, the doors will lock then unlock automatically.

GETtheMANUALS.org

OPERATION OF REMOTE CONTROL UNIT FITTED WITH HANDS-FREE SYSTEM

In operation, this system uses:
– a hands-free RENAULT Card (A),
– a card reader (B),
– an electronic controller integrated into the UCH (C),
– an engine start push-button (D),
– the injection computer (E),
– the clutch pedal sensors (F) and gearbox neutral position sensors,
– the electric steering lock (G),
– presence sensors for each door handle (H),
– a red 'door locked' warning light,
– the vehicle direction indicators,
– two specific aerials for hands-free transmission (I),
– specific interior door locks for the deadlocking function (J),
– a buzzer (K).

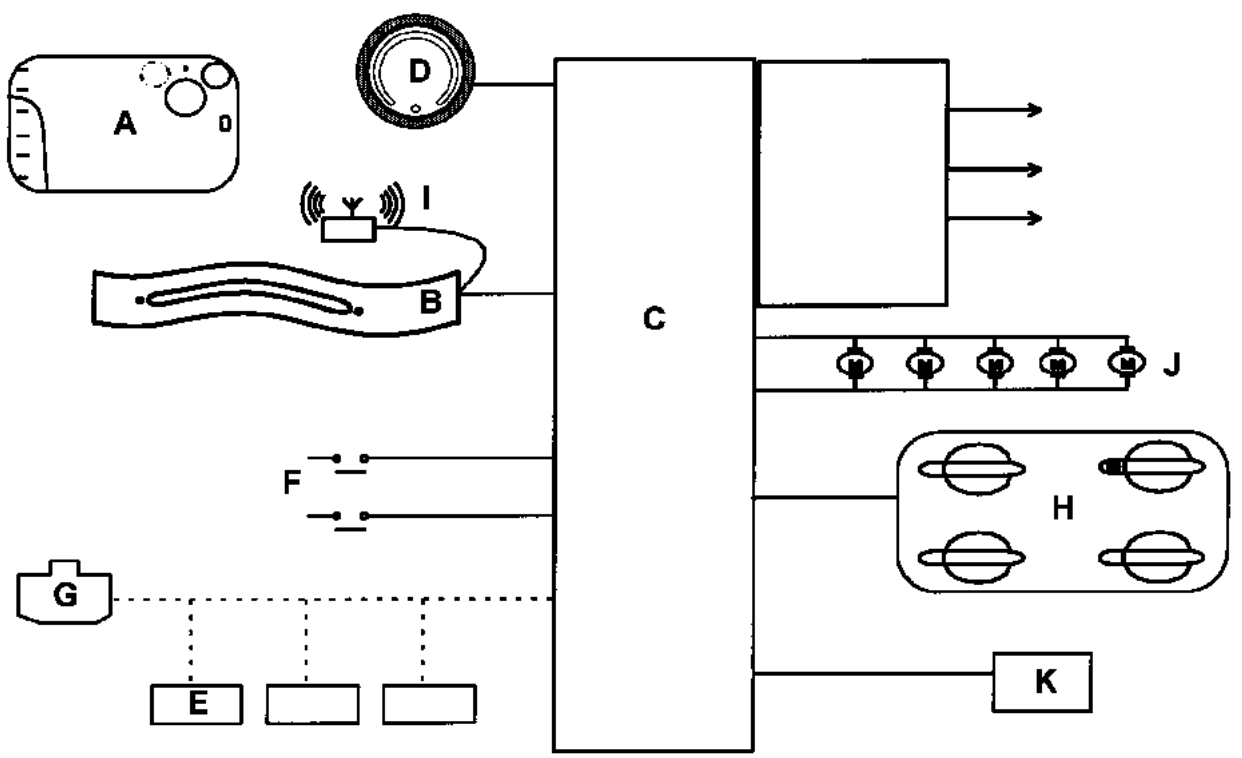

19242-1

GETtheMANUALS.org

The RENAULT hands-free card has three buttons:
– a **locking** button (1). This button allows the doors to be locked and inhibits the hands-free function,
– an **unlocking** button (2). This button allows the doors to be unlocked and inhibits the **hands-free** function,
– a locking button with **activation of the hands-free system** (3).

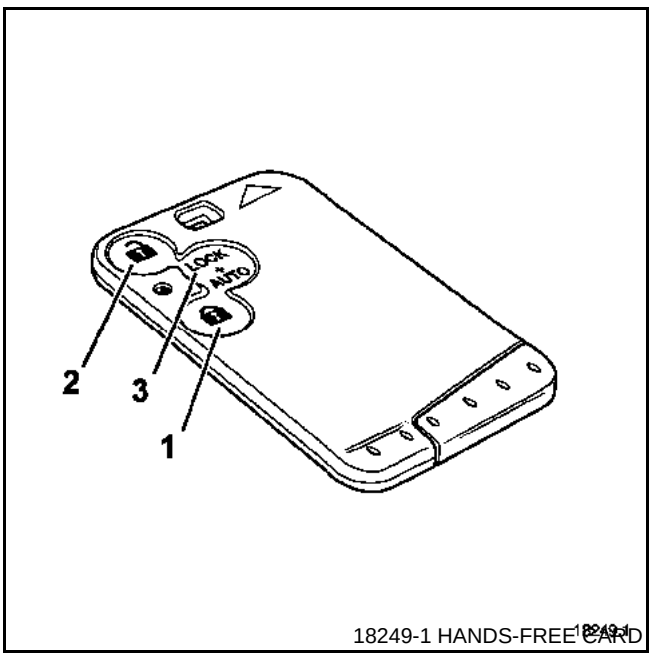

18249-1 HANDS-FREE CARD

NOTES: this remote control unit can be used without the hands-free system after this function has been inhibited by buttons (1) and (2). In this case, operation is then identical to that of the simple remote control unit.

To lock the vehicle doors using the hands-free system (press button (3) if the hands-free function has been deactivated):

– close the doors and the luggage compartment,
– take the RENAULT Card away from the vehicle. Once the card is out of communication range with the UCH (via the radio aerials), the doors and the luggage compartment lock.

Locking of the doors by the remote control unit is indicated by the hazard warning lights flashing, the horn sounding and the red warning light coming on.
If one or more of the doors is not locked properly, the hazard lights remain off after remote control locking.

NOTE: pressing the **close** button or **open** button on the RENAULT Card deactivates the hands-free function. The **hands-free** RENAULT Card then functions as a **simple** RENAULT Card. Pressing the auto button on the RENAULT Card reactivates the system after approximately **3 seconds**.

IMPORTANT: diagnostic tools can be used to inhibit the locking with the hands-free function.

GETtheMANUALS.org

To unlock the vehicle doors using the hands-free system (press button (3) if the hands-free function has been deactivated):

- approach the vehicle so that the RENAULT Card enters the area of communication with the UCH,
- place your hand behind one of the door handles or open the luggage compartment,
- the presence sensors in the handles initiate the **hands-free** query on the vehicle.
- If the card is recognised, the vehicle unlocks. This is shown by the hazard warning lights flashing.

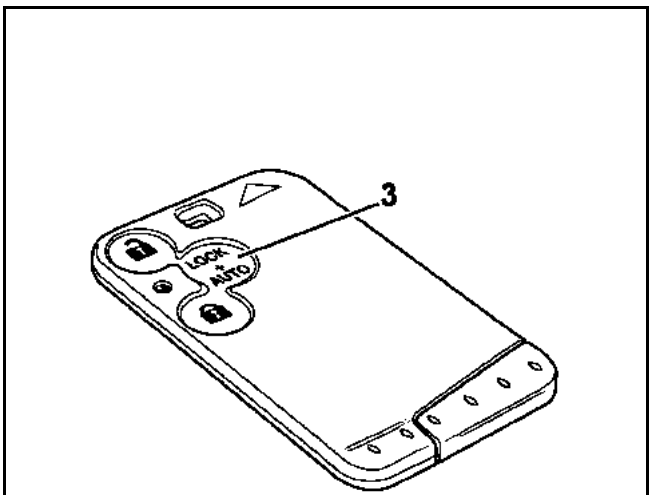

18249-1 HANDS-FREE CARD 18249-1

NOTE: The UCH controls the hazard warning lights flashing when the remote control unit is requested (refer to the **Indicators section**).

RENAULT CARD POWER SUPPLY

RENAULT Card remote control units are powered by a battery. The battery charge status is indicated by warning light (4).

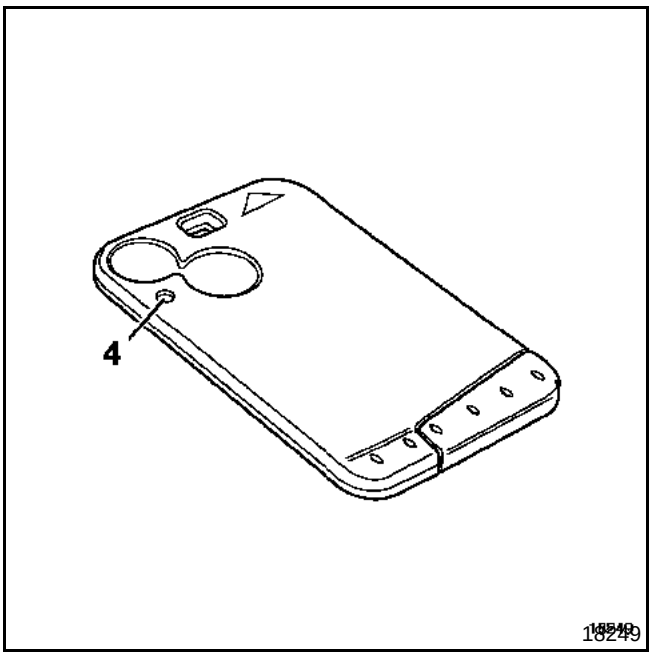

18249

The three-button RENAULT Card is fitted with a rechargeable battery for the hands-free function. It is charged when the RENAULT Card is inserted in the reader. The rechargeable battery recovers one day's discharge in 20 minutes of charging. Correct recharging can take 24 hours. This rechargeable battery cannot be removed.

The transponder, engine immobiliser system in the RENAULT Card, does not comprise an electrical supply.

WARNING: the battery is also used for the hands-free function.

GETtheMANUALS.org

To check the opening and closing of opening elements, the direction indicators and the side repeaters are controlled by the UCH.

Press on the RENAULT Card		Effect on the locks	Operation of the direction indicators	Operation of the side repeaters	Operation of the horn
Closing	1 short press	locking of the doors and luggage compartment	2 flashes	2 flashes	-
	2 short presses	deadlocking of the doors and luggage compartment	rapid flashing	rapid flashing	-
	1 long press****	closing of the windows and sunroof*	2 flashes	rapid flashing	-
	hands-free mode	locking of the doors and luggage compartment	2 flashes	lit continually for about 10 seconds	1 signal (configurable)
Opening	1 short press	unlocking of the doors and luggage compartment or the driver's door**	1 flash	1 flash	-
	2 short presses	unlocking of the doors and luggage compartment***	-	-	-
	hands-free mode	unlocking of the doors and luggage compartment or the driver's door**	1 flash	1 flash	-

* for this function, the vehicle must be fitted with a one-touch electric window control and anti-pinch electric sunroof.

** Some right-hand drive vehicles may be fitted with **driver's door unlocking only**. This function allows the driver's door and luggage compartment only to be unlocked by pressing the RENAULT Card briefly.

*** unlocking of the doors and luggage compartment for vehicles fitted with **driver's door only** unlocking.

**** on certain **right-hand drive** versions, this function is preceded by **deadlocking**.

Defect mode operation

When the lock command is given:
– none of the doors, nor the tailgate, will lock if the driver's door is open,
– an open luggage compartment or an open door inhibit the operation of the direction indicators and side repeaters and prevents hands-free unlocking.

GETtheMANUALS.org

The RENAULT Card reader contains two switches which control vehicle operation:
– a switch located half-way into the card slot, which controls power supply to accessories (+ ACCESSORIES),
– a switch at the end of the card slot (+ AFTER IGNITION).

NOTE: the RENAULT Card is locked in the reader once the UCH has received the **engine running** signal from the injection computer. It is released when the engine is stopped.

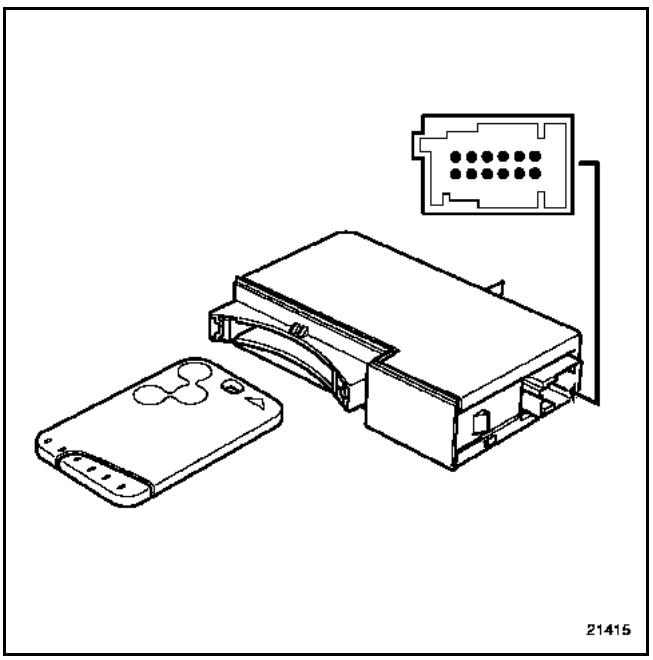

The RENAULT Card reader also functions as:
– a radio receiver for locking and unlocking the doors,
– a transponder aerial for the engine immobiliser function and detection of the RENAULT Card (see **Engine immobiliser section**),
– a RENAULT Card non-detection warning light,
– interior lighting.

GETtheMANUALS.org

DESCRIPTION

The single pressure button (START / STOP) is used for both starting and stopping the engine.

There are two indicator light possibilities:
– white upper light: invitation to start,
– green lower light: engine running.

This lighting is dimmed when the side lights are on.

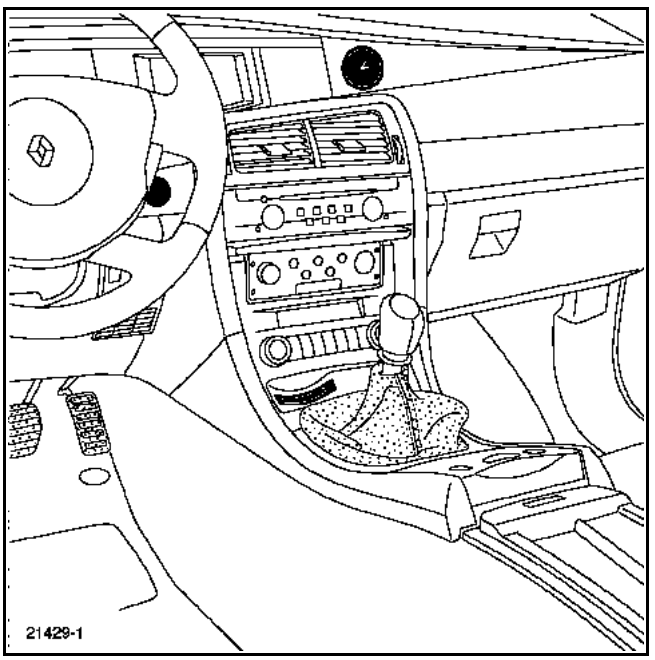

OPERATION

Engine start is authorised when the upper part of the button is lit.

Starting is one-touch: A single press of the button is enough to start the engine.

To start the engine:

- insert the card all the way into the reader to switch on the ignition and release the steering lock.

- check that the start-up conditions are met:

  NOTE:
  – on diesel vehicles, the starter motor cannot be operated during the preheating phase.
  – if the gearbox type is incorrectly configured in the UCH, it may not be possible to start the engine.
  – the gearbox must be in neutral or the clutch pedal depressed.

GETtheMANUALS.org

- The electric steering lock must be released and the ignition must be on.

- Ensure that the system has authorised engine starting:
  – If the upper section of the button lights up, it is possible to start up.

- Press the button to send the start command to the UCH. The UCH analyses the engine state (running, stalled, stopped). If the engine is stopped and the conditions are met, the UCH orders the starting relay to be supplied.

NOTE:
– It only possible to start the engine if the steering lock is released.
– The RENAULT Card is locked when the engine is running.
– If the engine stalls, a single press on the starting button will restart the engine.

To stop the engine:

Press the button to send the Stop Engine command to the UCH. This checks that the vehicle speed is less than **3 mph (5 km/h)** before cutting the + after ignition feed supply.

REMINDER: engine starting is assisted by the push-button. When the invitation to start is present, the press on the button (START/STOP) is memorised by the UCH. The starter motor is supplied with power as soon as the UCH authorises it, and until receipt of the engine running signal. If the engine does not start, the supply to the starter motor is cut after a period which varies according to the engine coolant temperature.

NOTE: certain vehicle faults originating in the RENAULT Card reader, the clutch pedal or NEUTRAL position sensors (automatic gearbox version) can affect engine starting. In this case, the starter motor is supplied by continuous pressure on the engine start push-button.

CONDITIONS REQUIRED FOR STARTING THE ENGINE
– RENAULT Card fully inserted into the reader,
– + after ignition connected,
– transponder (integrated into the RENAULT Card) detected,
– manual gearbox in Neutral position,
– automatic gearbox in Neutral or Park position,
– clutch pedal depressed, for the manual gearbox.

GETtheMANUALS.org

The steering column lock is located at the base of the steering column. It is controlled by the UCH.

This lock is coded by the UCH and cannot be cleared (refer to **Section 82A**).

IMPORTANT: a faulty or disconnected steering lock will prevent the engine being started.

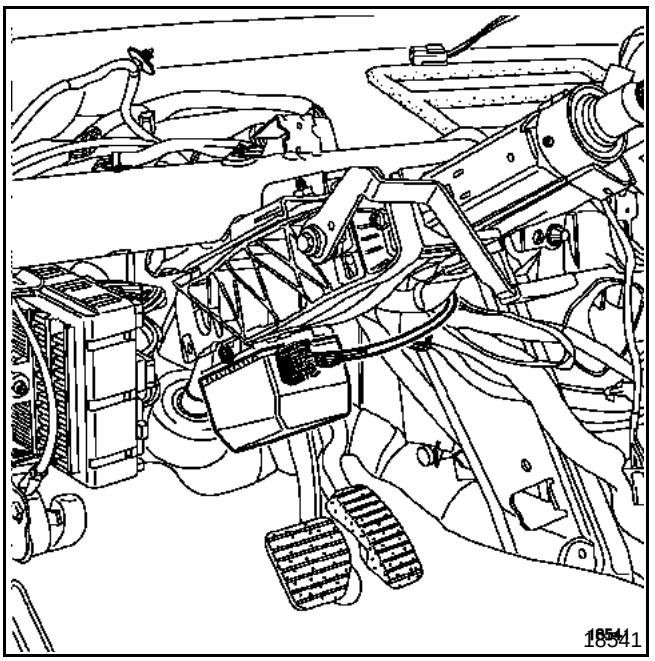

OPERATION

The steering is unlocked when the RENAULT Card is fully inserted into the reader and the transponder is recognised by the UCH.
The steering is locked when the RENAULT Card is fully withdrawn from the reader, the engine is stopped and the vehicle speed is zero.

NOTE: if the UCH has received an **impact** signal from the airbag computer, the steering column lock remains unlocked. The vehicle must be driven to reset it.

NOTES:

If the lock is not released when the key-card is fully inserted into the reader, the red immobiliser warning light will stay on but the + after ignition feed will not be authorised.

If internal steering lock faults occur, the **Stop** and **Service** warning lights may come on. The steering lock remains unlocked.

GETtheMANUALS.org

To allow operation of the **hands-free** RENAULT Card, each of the door handles is fitted with a presence sensor. This sensor detects the presence of the driver's hand and initiates the hands-free query.

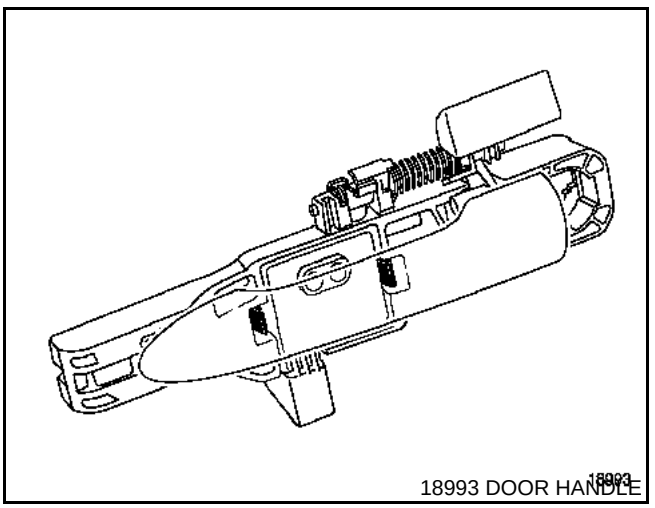

18993 DOOR HANDLE

The presence sensor, located on the back of the handle, is accompanied by a reflector and a handle movement switch.

After a long period of inactivity, the door handle sensor is relayed by a door handle movement sensor.

NOTE: For removal of the handle, refer to the **Bodywork** section. For opening sensor and handle track allocations, refer to **Section 84A**.

For the luggage compartment, the sensor is replaced by a switch integrated into the electric opening handle.

NOTE: For removal of the handle, refer to the **Bodywork** section. For boot handle track allocations, refer to **Section 84A**.

GETtheMANUALS.org

To operate in hands-free mode, vehicles are fitted with two specially placed aerials:
– in the roof for detection close to the front doors,
– in the rear bumper to cover the rear of the vehicle and to allow opening of the luggage compartment.

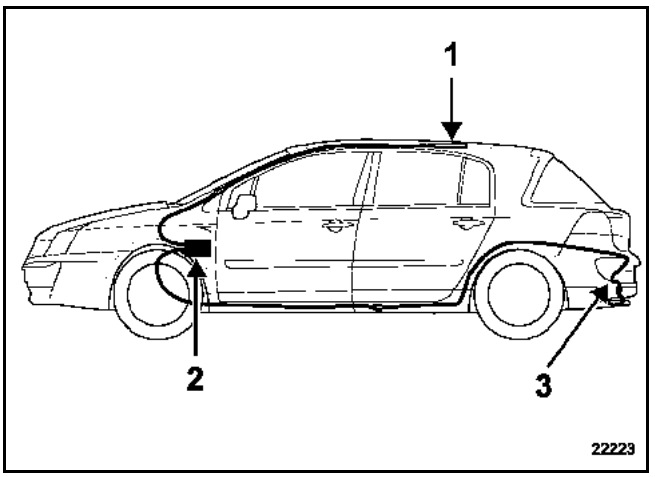

1 Roof aerial
2 Card reader
3 Bumper aerial

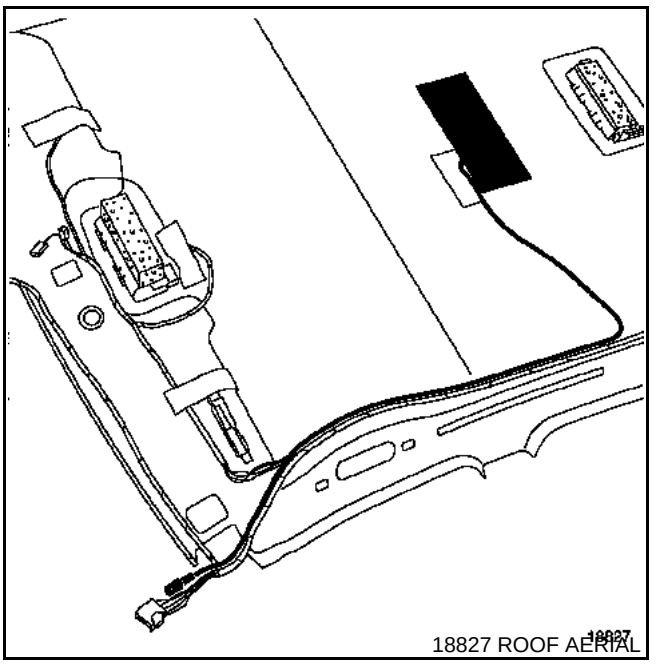

18827 ROOF AERIAL

To replace the roof aerial, it is necessary to remove the interior trim.

Attach the new aerial, respecting the routing and connection of the wiring. (refer to the **Bodywork section or Section 88A**).

WARNING: the reception range of a hands-free aerial is not fixed. It changes constantly, depending on the presence of objects close to the vehicle and climatic conditions.

GETtheMANUALS.org

Replacement, reallocation or addition of one or more RENAULT Cards

IMPORTANT: only RENAULT Cards inserted during this procedure will work. To be assigned to the vehicle, they must meet the following conditions:
- they have already been coded on this vehicle,
- or they are new (not coded).

Using the diagnostic tool:

- Establish dialogue with the engine immobiliser (UCH).

– Confirm the **SC001: Card programming** line in the **Command Specific command** menu.

– The tool displays **Please enter the After-Sales code**; ensure that there is no RENAULT Card in the reader and enter the secret After-Sales code (hexadecimal characters) and confirm it.
  – If a card is present in the reader, the screen displays **Remove card from reader**.
  – If re-reading of the code is incorrect, the screen displays **check After-Sales code and check that the card belongs to the vehicle**. Check the code then try entering the data again.
  – If the UCH is unprogrammed, the tool displays **Insert a card already programmed to the vehicle** (refer to **Section 83**).

WARNING: the maximum time delay between each operation is 5 minutes, otherwise the procedure will be cancelled and the tool will display the message **Procedure interrupted: warning, the cards assigned to the vehicle are the ones assigned before starting the procedure. The cards submitted before interruption of the procedure are no longer blank and can only be assigned to this vehicle**.

- If the code entered is correct and the UCH is not unprogrammed, the reallocation procedure can commence, the screen displays. **Do you want to check the cards before assigning them to the vehicle?**
- If you want to check the cards, the tool displays **Insert the card fully into the reader**. Insert a RENAULT Card until the ignition is switched on:
  – If the Allocation is not possible, the screen displays **check the After-Sales code and check that the card belongs to the vehicle**. Insert another card.
  – If the card is accepted, the screen displays **Remove the card from the reader**.

- The tool displays **Insert the card fully into the reader**. Insert a RENAULT Card fully into the reader.
  – If the RENAULT Card is not accepted, the red indicator light remains off.
  – If the RENAULT Card is accepted, the red indicator flashes rapidly and the tool displays **1 card programmed** then **remove card from reader**

- The tool displays **Insert the card fully into the reader**. Insert another RENAULT Card fully into the reader.

  NOTE: if the same RENAULT Card is inserted twice, the system does not take this into account and the engine immobiliser indicator light remains off.

GETtheMANUALS.org

- Insert the RENAULT Card or the other Cards to be assigned to the vehicle (maximum 4) into the reader. The screen displays **2, 3 or 4 cards programmed** then **Remove the card from the reader**.

  WARNING: these must be old RENAULT Cards for the vehicle or new non-coded RENAULT Cards.

  NOTE: the vehicle can only accept a single RENAULT Card with the hands-free function. If a second card is assigned to the vehicle, it will function as an ordinary RENAULT Card.

  IMPORTANT: in the event that not all the RENAULT Cards are available, it will be necessary to carry out a subsequent reassignment procedure using all the cards.

  NOTE: it is possible to cancel the RENAULT Card reallocation procedure while it is in progress.

GETtheMANUALS.org

Carry out the **Multiplex network** test and establish dialogue with the **Engine immobiliser** system.

Select the **Command** menu then **Specific command**. Select the command **SC001: Card programming**.

If the tool displays: **Remove card from reader**.

- The procedure must be carried out with the ignition off.

The tool displays: **Please enter the After-Sales code**.

Enter the code (12 hexadecimal characters in upper case).

- The tool displays: **Check the After-Sales code and check that the card belongs to the vehicle**.
  - The code entered does not correspond to the code for the UCH. Check the code and try programming again.

The tool displays: **Do you want to check the cards before assigning them?**

- This function allows you to test the rechargeable battery and check the frequency of the RENAULT Card.

A

GETtheMANUALS.org

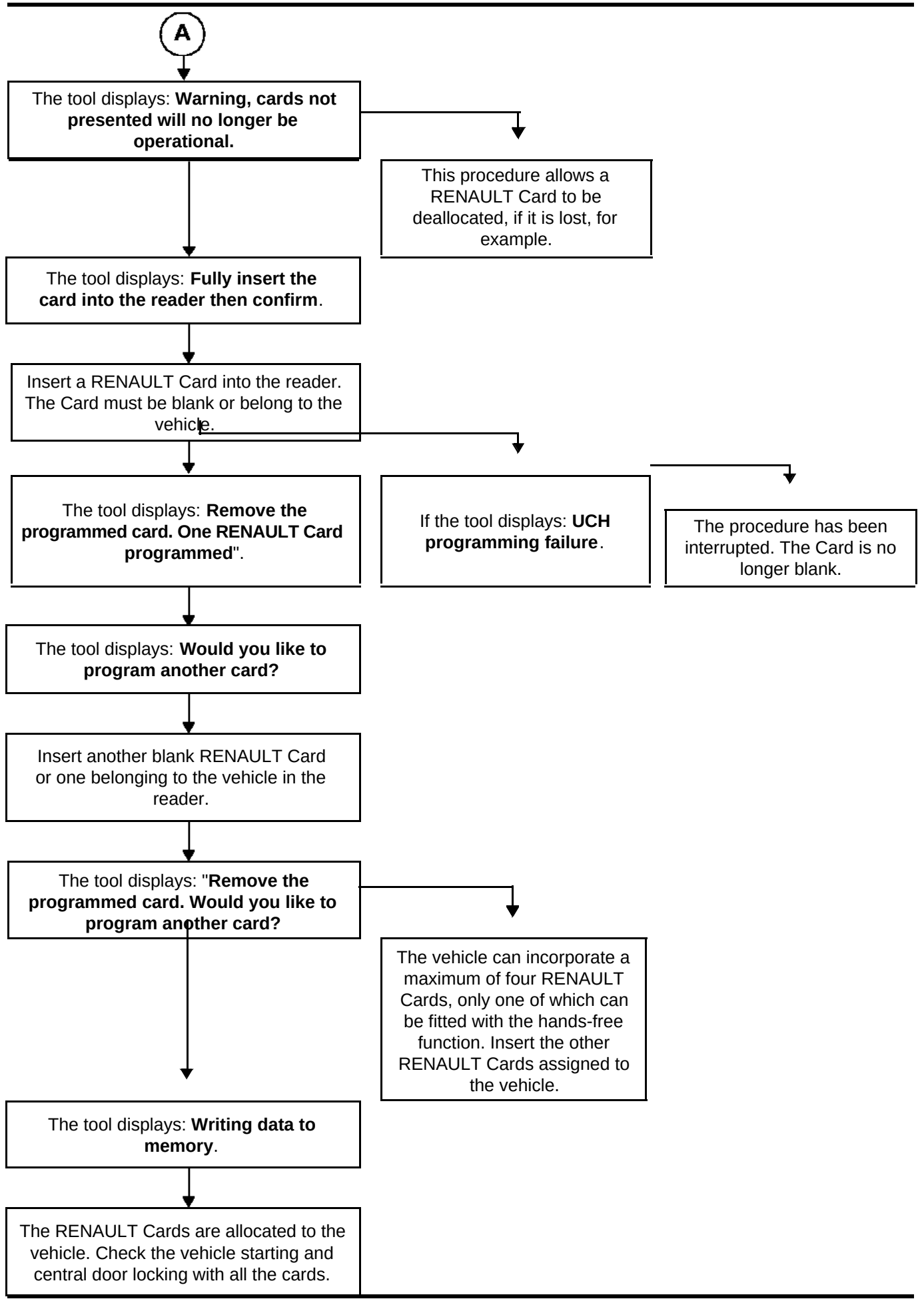

GETtheMANUALS.org

Normal operation	Cause	Effect	Remedy
Hands-free operation (locking and unlocking)	Rechargeable battery low	Hands-free locking not possible: press the close button on the remote control unit to lock the vehicle. Hands-free unlocking operates normally.	
	RENAULT Card left in the vehicle for 15 minutes	Hands-free locking not possible : press the close button on the remote control unit to lock the vehicle. Hands-free unlocking operates normally.	Switch on the ignition to recharge the rechargeable battery or run the tool command.
	Rechargeable battery discharged	Hands-free mode completely inactive	
	Battery discharged	Remote control unit operation (hands-free and simple) not possible	Replace battery.

GETtheMANUALS.org

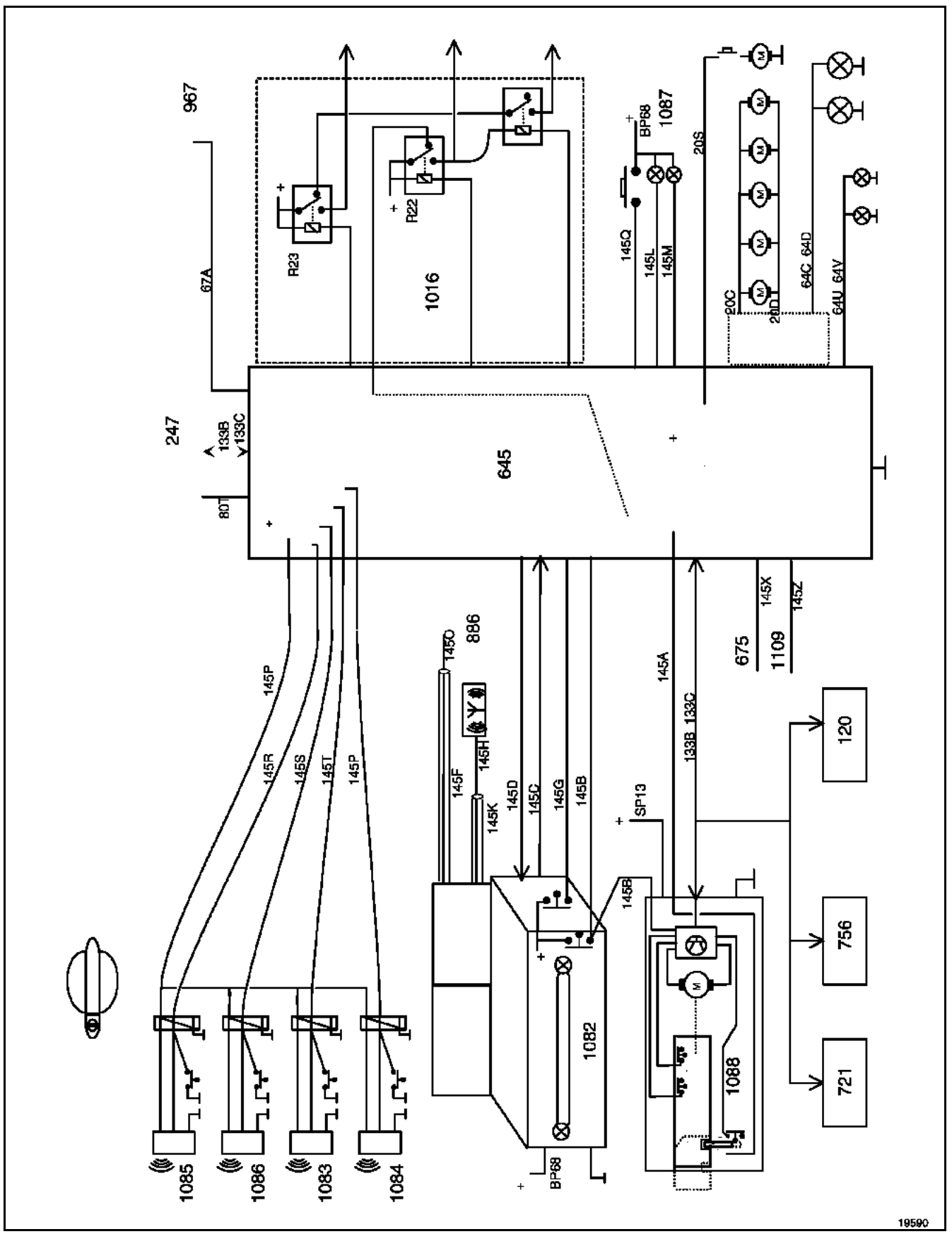

GETtheMANUALS.org

120	Injection computer
247	Instrument panel
645	UCH
675	Clutch pedal switch
721	ABS computer
756	Airbag computer
886	Hands-free aerial
967	Audible alarm (beeper)
1016	Relay/fuse box
1087	Engine start/stop button
1082	RENAULT Card reader
1083 → 1086	Presence sensors
1088	Electric steering column lock
1109	Gearbox neutral sensor

GETtheMANUALS.org

GENERAL INFORMATION

The electric sunroof has two positions, controlled by the same motor: tilt (three positions) or sliding (six positions).

The electric sunroof has an anti-pinch function which is adjusted according to the speed of the vehicle.

WARNING: the anti-pinch mode is only operational if the sunroof has been correctly initialised.

NOTE: the sunroof (slide or tilt) can be closed by pressing and holding down (about 2 seconds) the lock button of the RENAULT Card.This signal is controlled by the UCH (refer to **Section 87B**) if it is correctly configured.

In this case, the switch remains in the open position, press it to return to the open position.

IMPORTANT: the sunroof can be operated manually at (C) using an Allen key in the event of a fault in the sunroof motor.

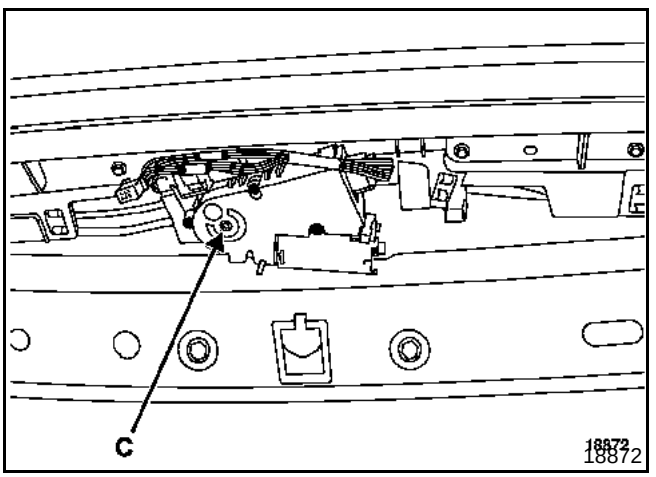

OPERATING PRINCIPLE

Operation of the sunroof is controlled by the switch.

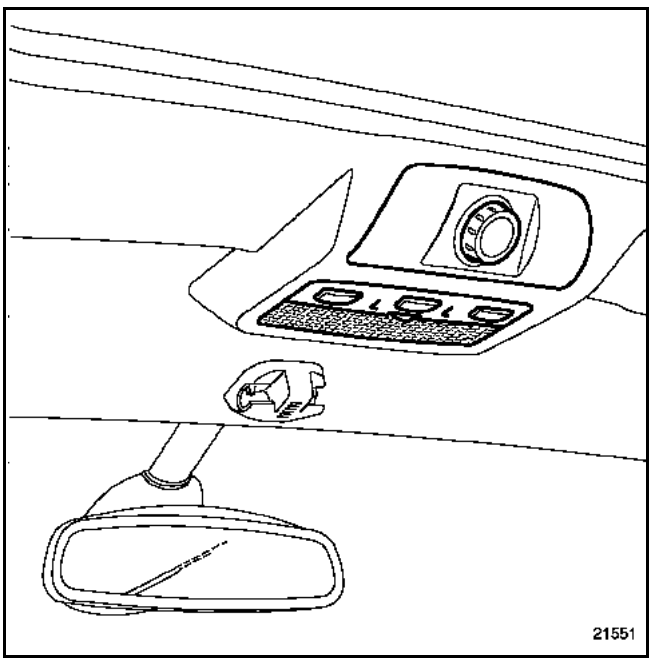

tilt area (three positions)
slide area (six positions)

To operate, the sunroof motor must receive authorisation from the UCH:

– **0 volt** signal: authorisation for sunroof movement (open or close)

– **+ 12 volt** signal: no authorisation for movement of the sunroof

– Opening Cyclic Ratio signal: automatic closure of the sunroof by long pressing and holding down the remote control unit.

GETtheMANUALS.org

ANTI-PINCH

Obstacle detection is based on analysis of the motor rotation speed. An encounter with an obstacle causes a significant variation in motor speed.

Two Hall effect sensors incorporated into the motor generate periodic signals. The speed can thus be determined within half a revolution.

During the initialisation phase, a speed curve is stored by the computer integrated into the motor.

For the anti-pinch function, the computer compares the actual speed of movement with the stored speed.

Depending on the speed variation detected, the system triggers anti-pinch mode.

IMPORTANT: anti-pinch mode is only active if the system is correctly initialised.

NOTE: the anti-pinch function can be disabled in order to overcome a point of resistance (bent rail, foreign body in the runners). To do this, keep pressing until the sunroof is closed in step-by-step mode. The anti-pinch function is reactivated when the switch is released.

INITIALISATION PROCEDURE

In the event of battery disconnection, an electrical fault or servicing of the sunroof, the system will only operate in manual mode, in short jerky movements.

To perform initialisation:
– set the sunroof switch to the maximum tilt position,
– press and hold the switch. After two seconds, the sunroof will tilt to the maximum position step-by-step, then drop down a few centimetres,
– release the switch,
– press the switch again within five seconds,
– keep the switch depressed, the sunroof will open then close in the slide position,
– the motor is initialised,
– set the switch to stop.

NOTE: during the initialisation procedure, the time between the two actions must not exceed 5 seconds, or the computer will start a new initialisation cycle.

GETtheMANUALS.org

REMOVING THE MOTOR

Remove:
– the sunroof switch and its connector,
– the roof console and its connector.

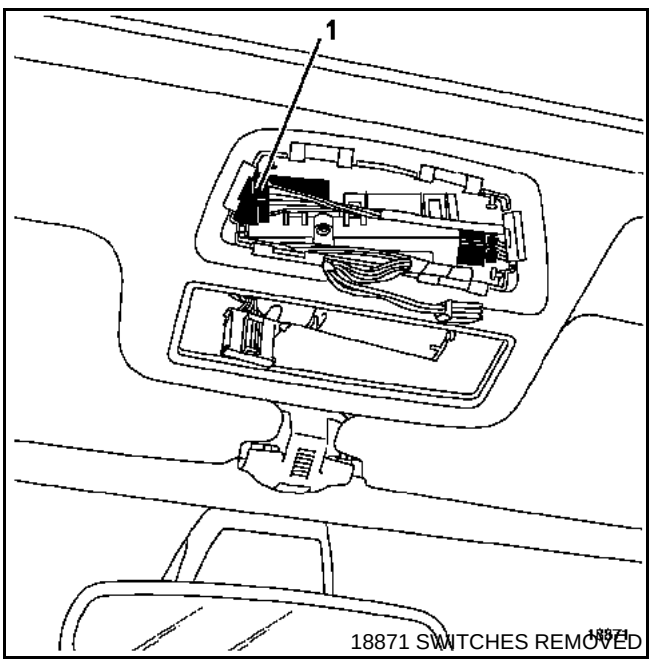

Release the connector (1) from its mounting, then disconnect the sunroof motor connector.

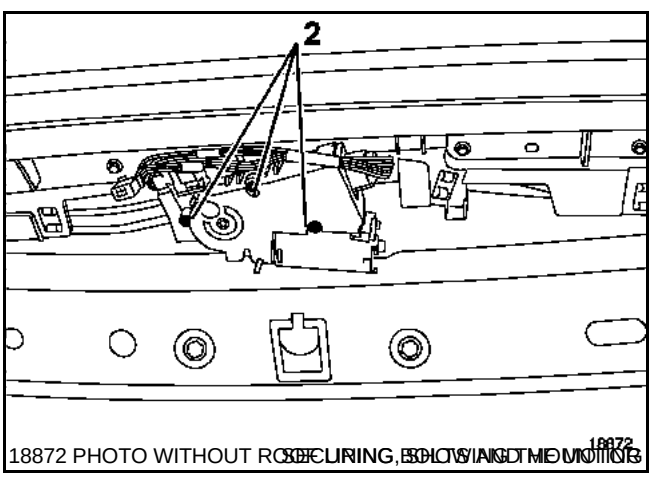

Remove the mounting bolts (2).

Release:
– the connector mounting,
– the sunroof motor.

SPECIAL NOTES FOR REFITTING

The system must be initialised after the motor is refitted.

GETtheMANUALS.org

ALLOCATION OF MOTOR CONNECTOR

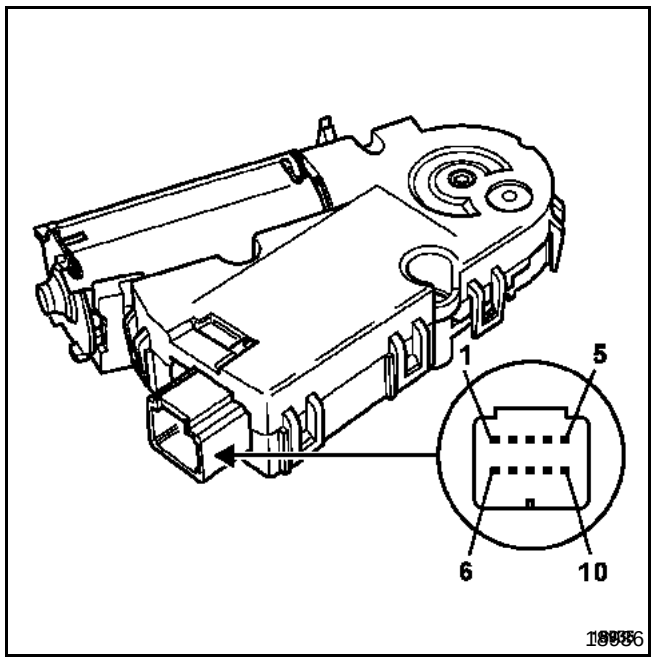

Track	Description
1	sunroof control (track A3 of the switch)
2	sunroof control (track B1)
3	sunroof control (track B2)
4	sunroof control (track B3)
5	sunroof control (track A1)
6	not in use
7	power supply
8	vehicle speed signal
9	central opening and closing authorisation signal
10	earth

NOTE: the **vehicle speed** and **automatic closing control** signals are sent by the UCH.

ALLOCATION OF COMMUTATOR CONNECTOR

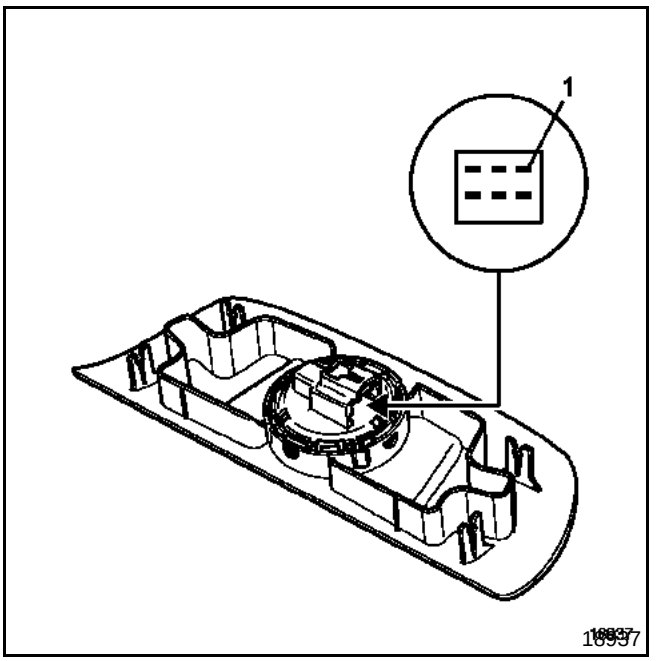

SWITCH POSITION	Tracks 1 and 6	Tracks 1 and 5	Tracks 1 and 3	Tracks 1 and 2
Slide position 6	0	0	0	1
Slide position 5	0	0	1	1
Slide position 4	0	0	1	0
Slide position 3	0	1	1	0
Slide position 2	0	1	1	1
Slide position 1	0	1	0	1
Closed	0	1	0	0
Tilt position 1	1	1	0	0
Tilt position 2	1	1	0	1
Tilt position 3	1	1	1	0
Depressed	0	0	0	0

NOTE: 0 = circuit made (closed)
1 = circuit open

GETtheMANUALS.org

GENERAL INFORMATION

Certain vehicles are fitted with a parking aid to inform the driver of any obstacles behind the vehicle during reversing (posts, stone posts, another vehicle, etc).

OPERATION

The system consists of:
- four ultrasonic sensors incorporated into the rear bumper,
- an independent computer (with a diagnostic function),
- an acoustic warning signal,
- an inhibitor switch.

The system is activated automatically when reverse gear is selected (this activation is indicated by a short start-up tone). The ultrasonic sensors located in the rear bumper measure the distance between the vehicle and a potential obstacle.

The frequency of the acoustic signal varies with the distance: it is activated when an obstacle is about 5 feet (150 centimetres) from the bumper, its pulse frequency rising until a continuous tone is emitted when the obstacle is about 10 inches (25 centimetres) from the bumper.

NOTE:
- to ensure correct operation of the system, check that the ultrasonic sensors are clean,
- when the system detects an operating fault, a beep sounds for approximately 5 seconds,
- sensor function can be intermittent in bad weather or when a bicycle carrier is fitted.

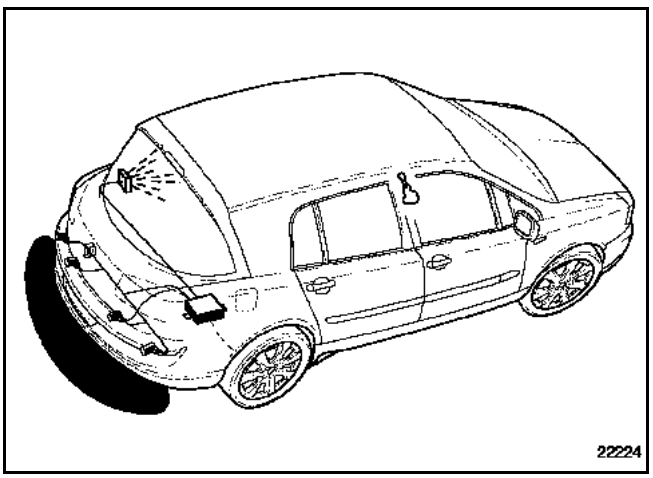

1 Sensors
2 Computer
3 Audible alarm (beeper)

GETtheMANUALS.org

The system is fitted with a switch (A) to inhibit the function:
– with a short press, the function is inhibited until the ignition is switched off,
– with a long press, the function is inhibited continually.

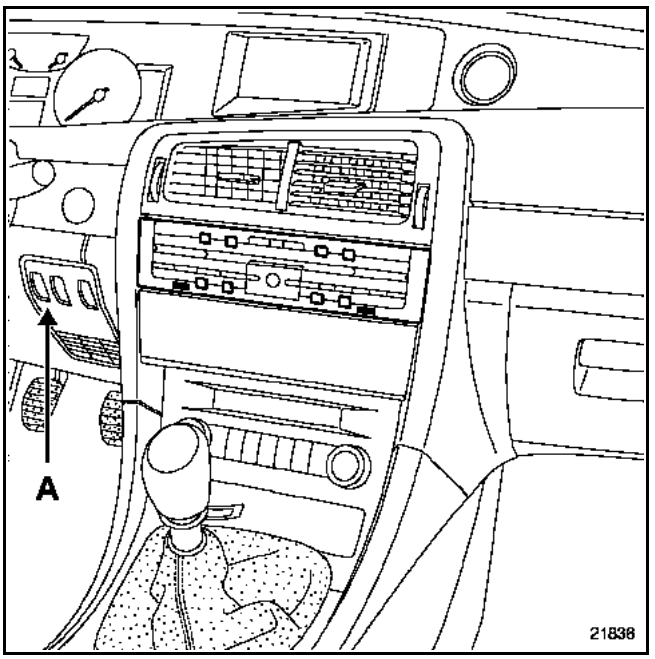

NOTE: any inhibitions made can be displayed with the diagnostic tool.

CONNECTION

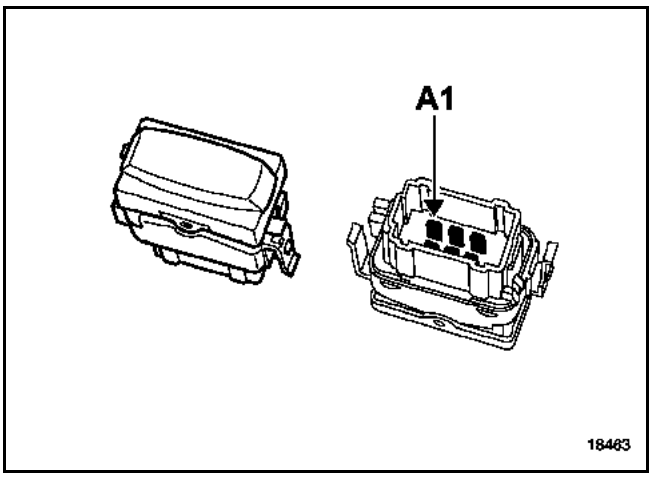

Track	Description
A1	+ Lighting
A2	Earth
A3	Not used
B1	Control output (computer connection)
B2	Diode feed
B3	Earth

Checks with multimeter

Track	Description	Value
B1 and A2	Depressed	0 Ω
B1 and A2	Released	α

NOTE: the resistance of the lighting bulb is approximately **30 Ω** between tracks A1 and A2.

GETtheMANUALS.org

COMPUTER

REMOVAL

Remove the interior trim of the right-hand side of the luggage compartment (refer to the **Bodywork section**).

Disconnect the computer connectors and undo the mounting bolts.

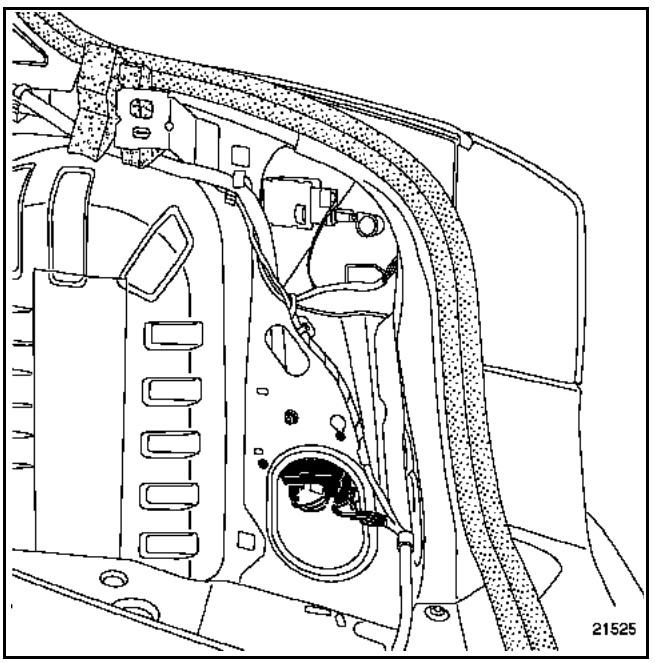

REFITTING

Refitting the computer does not pose any special problems.

The computer must be configured using the diagnostic tools after it has been replaced.

Using the **NXR, Clip** or **Optima 5800** diagnostic tools:

- select and confirm **parking assistance**,
- select and confirm the **Command** menu, then **System configuration**,
- select and confirm the vehicle type.
- check that the configuration is correct with the **reading configuration** menu.

GETtheMANUALS.org

CONNECTION

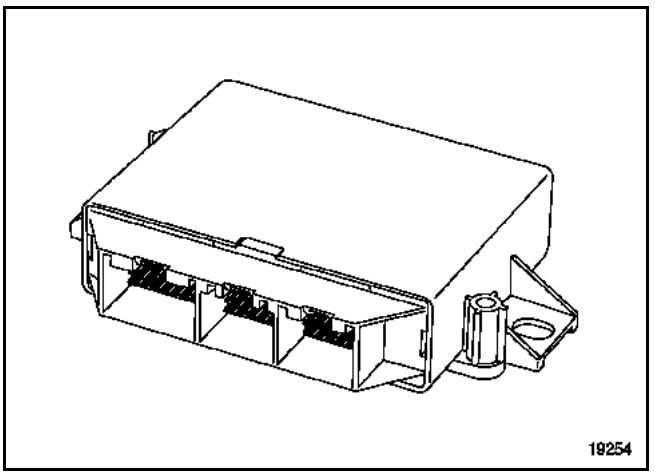

NOTE: connector (2) is not used.

CONNECTOR 1 (16-track)

Track	Description
1	+ after ignition
2	Audible alarm (beeper)
3	Not used
4	Inhibitor switch
5	Inhibitor switch
6	Reverse gear signal (UCH)
7	Not used
8	Earth
9	Not used
10	Audible alarm (beeper)
11	Vehicle speed signal
12	Diagnostic connection
13	Indicator light (switch)
14	Not used
15	Not used
16	Not used

CONNECTOR 3 (12-track)

Track	Description
1	Right-hand inside sensor signal
2	Left-hand inside sensor signal
3	Right-hand outside sensor signal
4	Left-hand outside sensor signal
5	Sensor earth
6	Sensor supply

The system can be inhibited with the diagnostic tool or with the switch.

NOTE: the vehicle speed signal is not used.

GETtheMANUALS.org

WARNING BUZZER

REMOVAL

Remove the interior trim of the left-hand side of the luggage compartment (refer to the **Bodywork section**).

Disconnect the connector.

Remove the plastic mounting rivets (1).

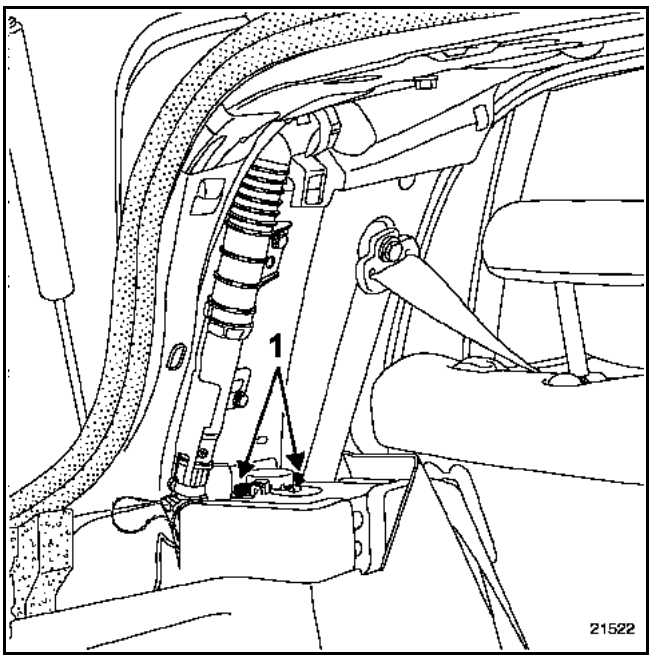

REFITTING

Refitting the acoustic signal buzzer does not pose any special problems.

Replace the plastic rivets with traditional rivets.

The volume and tone frequency of the acoustic signal can be changed or disabled using the diagnostic tools.

Using the **NXR, Clip** or **Optima 5800** diagnostic tools:

- select and confirm **parking assistance**,
- select and confirm the **command** menu, **CF001: buzzer volume** and select the line MEDIUM LOUD,
- select and confirm **CF 006: buzzer tone** and select the line 500 Hz,
- check that the configuration is correct with the **reading configuration** menu.

GETtheMANUALS.org

ULTRASONIC SENSORS

The sensors are all identical.

They are integrated into the bumper strip.

WARNING: the sensors are fragile.

The outer metal part of the sensor cannot withstand tool impact.

REMOVAL

It is not necessary to remove the bumper in order to remove the sensors.

Remove the clips (A) retaining the lower section of the bumpers.

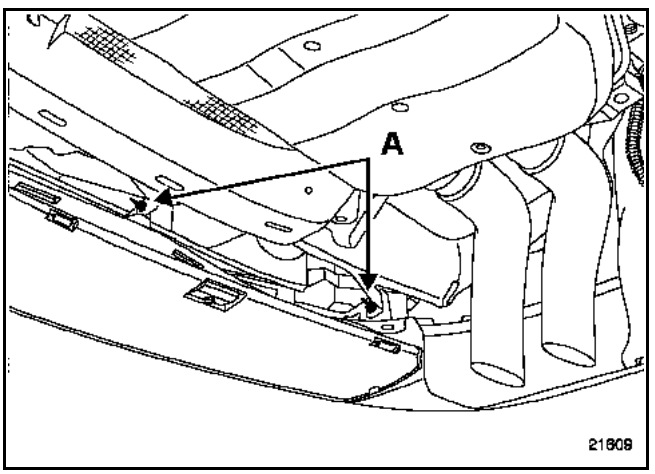

Disconnect the connector (B).

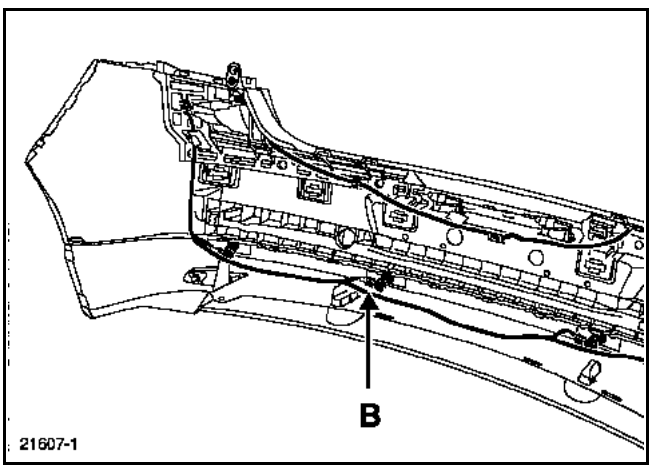

Unclip the sensor, taking care not to scratch it.

NOTE: each detector is retained in a housing composed of two side clips and a positioning pinion.

REFITTING

Position the pinion (C) opposite its housing and insert the sensor until the clips are in place.

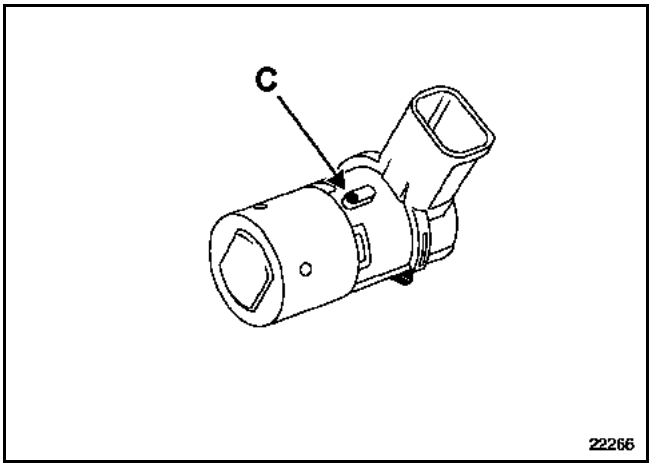

IMPORTANT: the sensors are heat sensitive (temperature above **80°C**).

GETtheMANUALS.org

CONNECTION

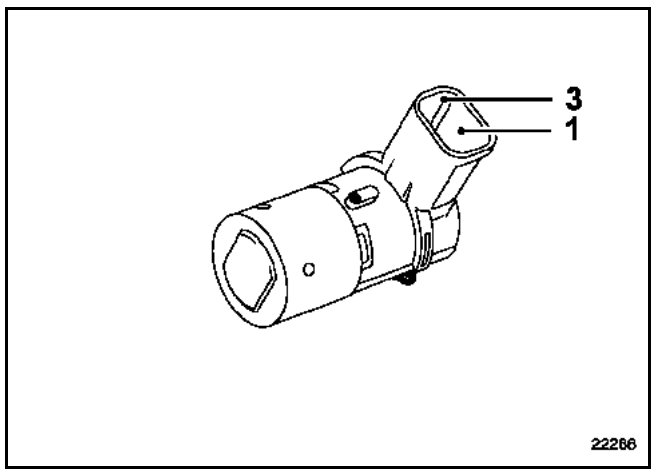

Track	Description
1	Supply
2	Signal
3	Earth

GETtheMANUALS.org

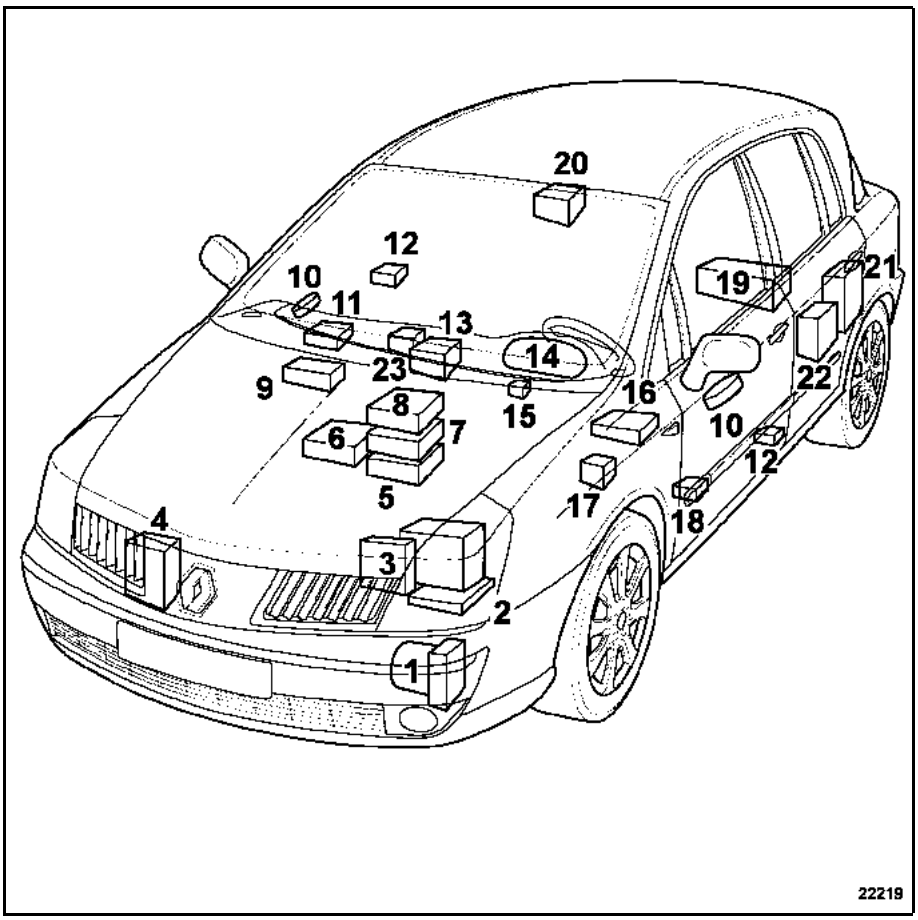

1 Immobiliser system computer
2 Injection computer
3 Automatic transmission computer
4 Cruise control remote control (radar)
5 RENAULT Card reader
6 Central Communication Unit (for Navigation)
7 Automatic air conditioning control panel
8 Entry-level radio or CD loader
9 Radio display or navigation screen
10 Electric door mirror and window control
11 Voice synthesiser unit
12 Side impact sensors
13 Airbag computer
14 Instrument panel
15 Electric steering column lock
16 UCH
17 Beam adjustment
18 Driver's seat position memory
19 Electric parking brake
20 Parking assistance
21 CD loader (with entry-level radio)
22 Tyre pressure monitor computer
23 Automatic transmission side repeater

GETtheMANUALS.org

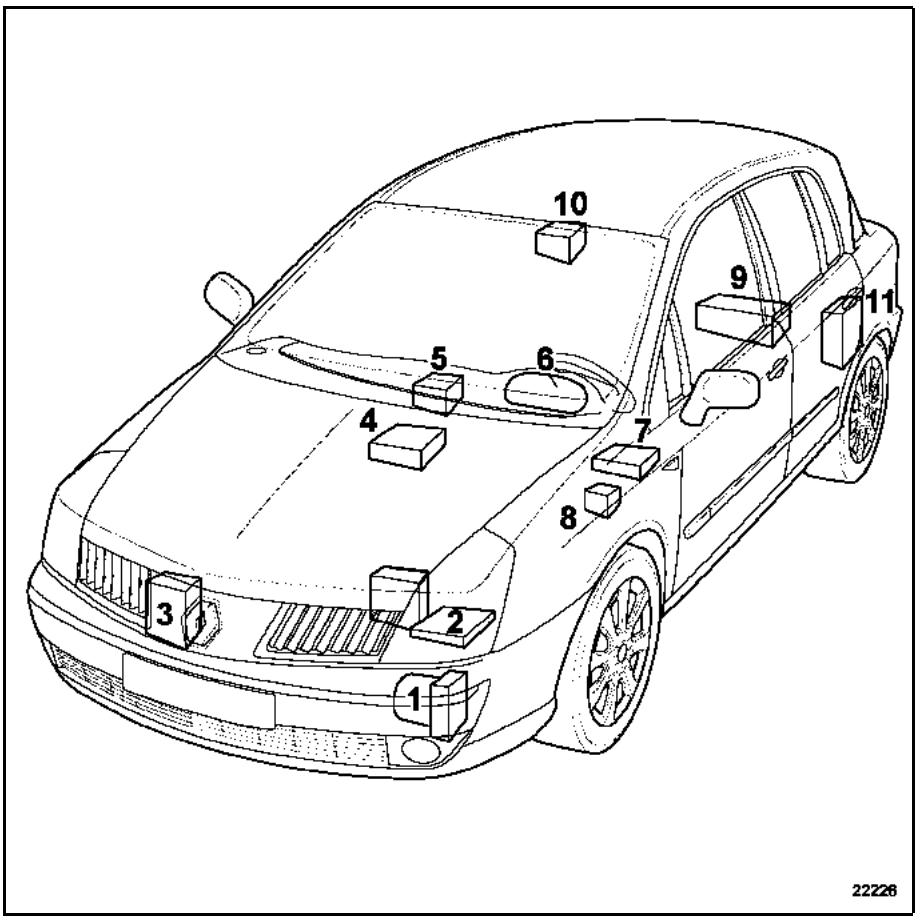

1 Immobiliser system computer
2 Injection computer
3 Cruise control remote control (radar)
4 Automatic air conditioning control panel
5 Airbag computer
6 Instrument panel
7 UCH
8 Beam adjustment (Xenon bulbs)
9 Electric parking brake
10 Parking assistance
11 Tyre pressure monitor computer

GETtheMANUALS.org

AUTOMATIC SEAT CONNECTOR

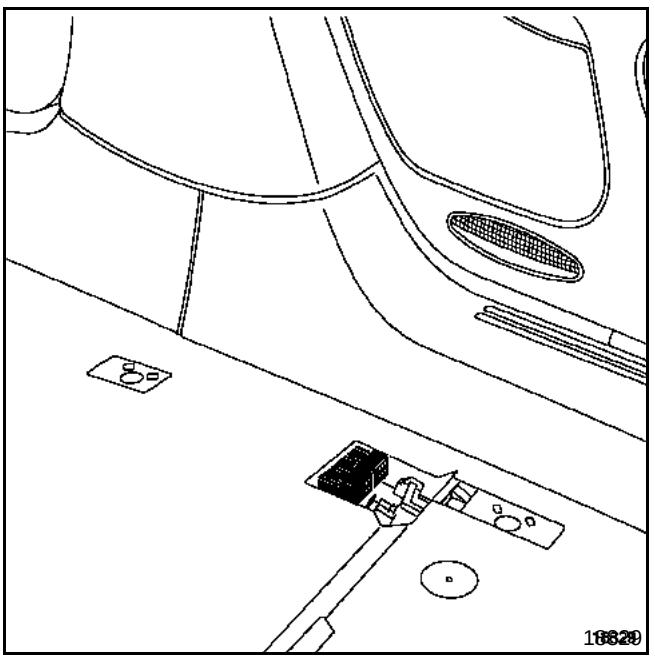

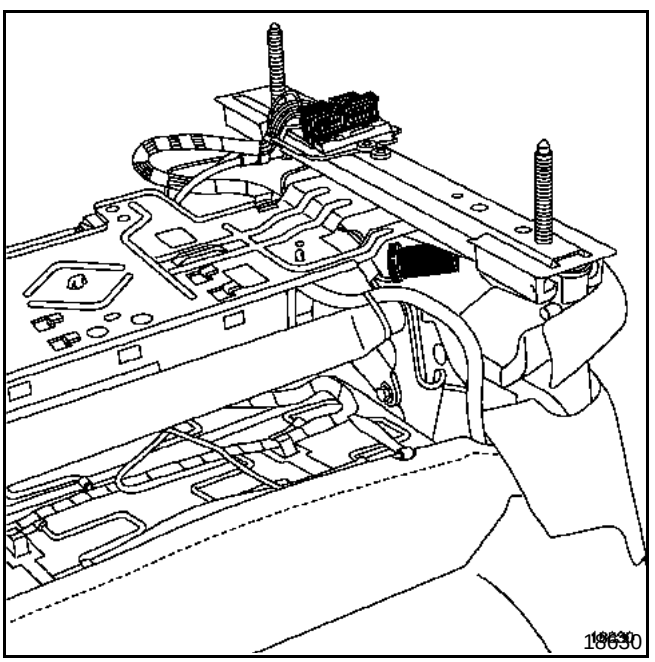

CONNECTION (fullest version)

Track	Description
1	Electric seat supply (+ accessories)
2	Seat belt warning light (driver)
3	Power supply to heated seat
4	Under seat lighting supply
5	Earth
6	Electric seat belt retractor
7	Side airbag
8	Seat belt buckle pretensioner
9	Seat position sensor (driver)
10	Memory signal (driver)
11	Seat with position memory power supply (driver)
12	Not used
13	Earth
14	Electric seat belt retractor
15	Seat with position memory power supply (driver)
16	Heated seat warning light
17	Power supply to electric seat
18	Not used
19	Not used
20	Not used
21	Side airbag
22	Buckle pretensioner
23	Driver's seat position sensor earth
24	Driver's memory signal to door mirrors
25	Not used
26	Under seat lighting earth
27	Electric seat belt retractor
28	Lap-belt pretensioner (driver)

WARNING: When removing a seat, take care not to damage the connector which would create static electricity; this could trigger the airbag.

GETtheMANUALS.org

The headlining is not glued to the vehicle. It is held in place by the door seals, the sun visor and the grab handles (use tool **Car. 1597**).

It is possible to replace the headlining and keep the harness or replace the harness and keep the headlining.

REMOVAL

The harness is glued to the headlining. To remove it, heat the glue using a hot air gun, then cut the glue bead taking care not to damage the harness.

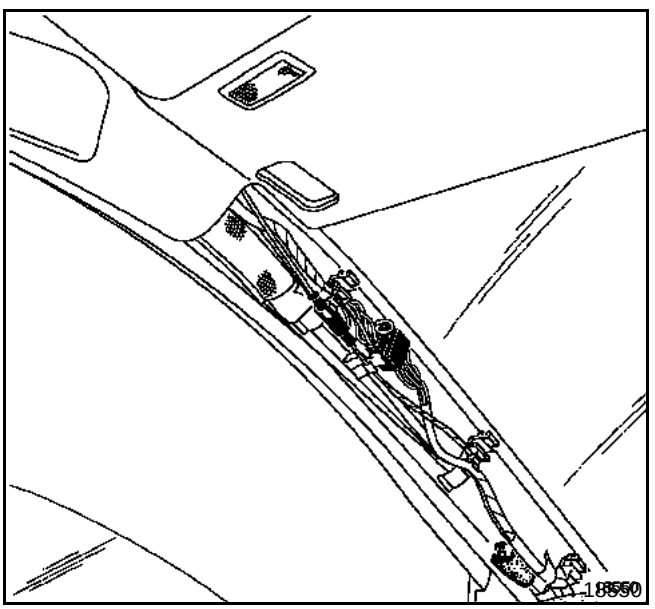

It is also possible to leave the faulty harness in place, and to glue the new harness alongside it.

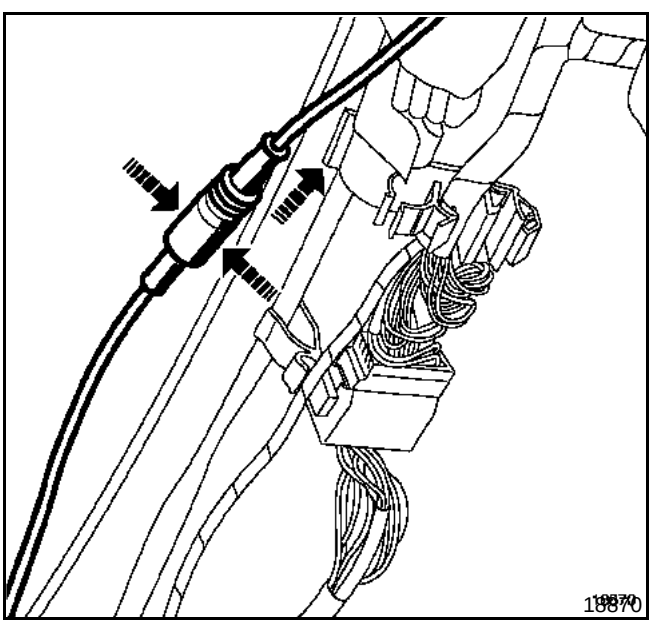

REFITTING

When refitting the harness on the headlining, it is essential to observe the location of the connectors with respect to the edge of the headlining. A mark on the harness must coincide with the edge of the headlining.

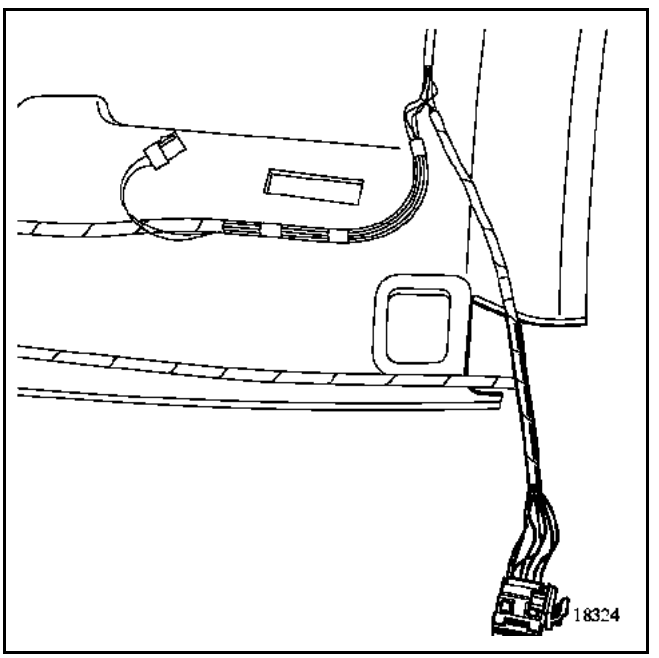

Special features of the hands-free aerial

The hands-free aerial is glued to the headlining. It can be replaced on its own.

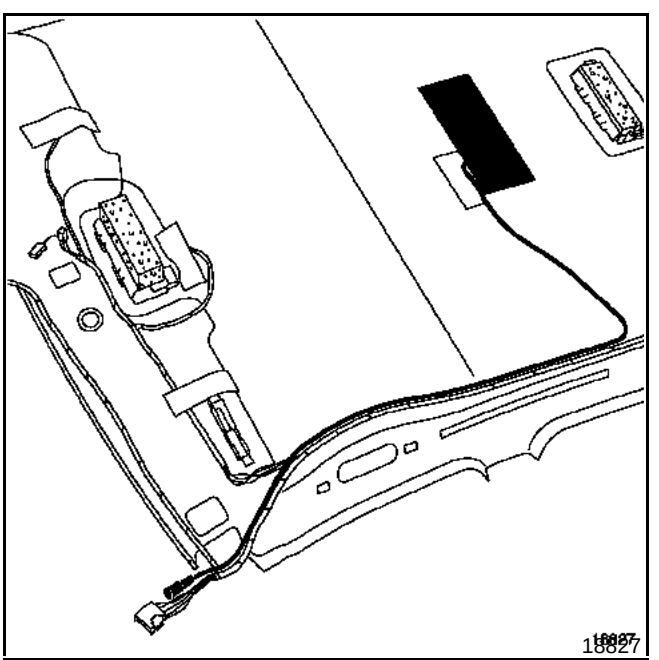

GETtheMANUALS.org

DESCRIPTION

Vehicle computers are becoming increasingly powerful, and can perform increasingly complex calculations. To perform these calculations, they need to acquire information from sensors or from other computers.

The multiplex network allows the computers to:
– exchange signals through a two-wire connection common to all the computers known as the **BUS**,
– reduce the number of cables and connectors.

If the computers are to communicate between each other using the multiplex network, they must speak the same language (protocol). RENAULT has chosen the **CAN** protocol.

● The CAN protocol

The BUS consists of a twisted pair of non-interchangeable wires, called *CAN H* and *CAN L*.

The information is transmitted in the form of long-tail pair square wave signals, which gives greater protection against electromagnetic interference and limits radiation. The voltages of the signals transmitted on the bus are strictly differentiated: between **2.5 and 3.5 V** for the CAN H line and between **2.5 and 1.5 V** for the CAN L line.

At each end of the multiplex connections are impedances of **120 ohms**.
– UCH side ≈ **120 ohms** on the CAN UCH line, (disconnected from the network).
– injection computer side ≈ **120 ohms** on the CAN line of the computer (disconnected from the network).

See the **Repairing the multiplex network** section for measuring the line impedance and performing a multiplex network test.

● The CAN frame:

The message sent on the multiplex network is called a **frame**. It consists of a series of logical levels organized into **5 fields**.
⇒ An arbitrage field indicating the addressee(s) and the frame's priority of access to the network.
⇒ A control field.
⇒ A field containing the message data.
⇒ A control field contributing to the security of the transmission.
⇒ An acknowledgement field indicating that the frame has been correctly sent over the network.

Special cases:
– If several computers attempt to send a frame at the same time, the frame with the highest arbitrage field value will have priority. The other transmissions (with lower priority) will be sent as soon as the most important frame has been sent. Each computer is able to send and receive.
– If a message is incorrect or incorrectly received by a computer, the acknowledgement field will not be validated and the whole message will be rejected.
– The airbag and wheel locking computers comprise the topology of the multiplex network. It is essential to check it during the first multiplex network test when it is first installed. Refer to the **Fault finding** section.

GETtheMANUALS.org

● **Repair of the multiplex network**

The multiplex network is connected to each of the computers by means of cable joints in the harness.

The fault finding procedure for these lines consists of verifying:
– continuity line by line,
– insulation from earth and voltage,
– line impedance:
  ≈ **60 Ohms** between CAN H and CAN L (battery disconnected between terminals 6 and 14 of the diagnostic socket),
  UCH side ≈ **120 Ohms** on the CAN UCH line, (disconnected from the network),
  ≈ **120 Ohms** on the CAN engine Electronic Central Unit, on the computer side (disconnected from the network),
– the frames can be displayed using an oscilloscope,
– the remaining fault finding operations can only be performed with the diagnostic tools (actuator test, measurement of parameters, etc.).

● **Fault finding**

Multiplex computers fitted with a diagnostic connection incorporate a multiplex network fault finding procedure.

Each computer permanently monitors its capacity to transmit and the regular arrival of messages from other computers. Any fault detected results in one or more present or stored faults on the multiplex network. These faults are grouped in a frame dedicated to the multiplex network fault finding procedure, using a format common to all the computers.

After-Sales, these faults can be displayed on fault finding tools in order to identify the faulty inter-computer connection(s) and to locate and ascertain the nature of the fault.

Each time a diagnostic tool is connected to a vehicle, a multiplex network test is performed by the tool.

● **The different multiplex connections on the vehicles**

Depending on the level of equipment, several multiplex networks may be present on the vehicles:

⇒ The vehicle multiplex network or intersystems
  – Injection
  – Automatic transmission (depending on version)
  – Anti-lock braking system
  – UCH
  – Electric steering column lock
  – Airbag
  – Air conditioning
  – Instrument panel
  – Central Communication Unit
  – Voice synthesiser
  – Tyre pressure monitoring system
  – Remote-controlled speed regulator
  – Electric window (driving position memory)

⇒ The private multiplex network (connecting the anti-lock braking system computer and the steering wheel angle sensor).

⇒ The multiplex network for the navigation system.

⇒ The multiplex network associated with the driver's seat position memory option.

GETtheMANUALS.org

These vehicles are fitted with a passive safety system of the PRS (Renault Protection System) type, comprising:
– front seat belt retractors (6) controlled by a special computer (12 tracks),
– front buckle pretensioners (driver and passenger) and lap-belt pretensioner (driver),
– seat belts in the front (**400 daN**) and rear (2) seatbelts (**600 daN**),
– dual generator front airbags (two volumes) (driver (7) and passenger (8)),
– pyrotechnic retractors on the rear seatbelts (side seats),
– a computer (5) (75 tracks) and two impact sensors (1),
– chest side airbags (4) in the lower seatback of the front seats),
– side curtain airbags (3),
– chest side airbags (9) in the rear seats (depending on the version),
– a driver's seat position sensor,
– a system fault warning light,

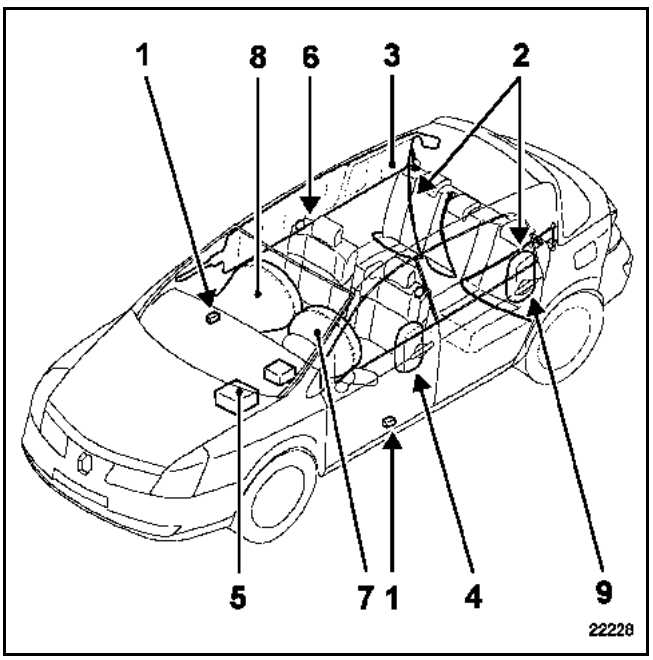

Note: Certain connectors are fitted with a new generation locking system. It is essential to unclip the lock before removing the connector and ensure it is correctly positioned after fitting. An unlocked connector will not supply the trigger line.

GETtheMANUALS.org

PRECAUTIONS DURING REPAIR

All operations on airbag and pretensioner systems must be carried out by qualified trained personnel.

WARNING: it is forbidden to handle the pyrotechnic systems (pretensioner or airbag) near a flame or heat source, as there is a risk of triggering them.

The airbags have a pyrotechnic gas generator with an ignition module and airbag which must not be separated.

IMPORTANT: before removing a safety system component, lock the airbag computer using the diagnostic tool.
When this function is activated all the triggering lines are disabled and the airbag warning light on the instrument panel lights up (ignition on).

When the airbag or pretensioner is triggered, the airbag computer is permanently locked and lights up the **airbag** warning light on the instrument panel. The airbag computer must be replaced. (Some components lose their nominal specifications after experiencing trigger energy).

After refitting all the parts, carry out a diagnostic check using the diagnostic tool.

If everything is correct, unlock the computer, if not, refer to the **fault finding** document.

IMPORTANT: refer to the **Destruction procedure** section when scrapping a pyrotechnic system that has not been triggered.

Any operation, even minor, is forbidden on the triggering lines of the pyrotechnic components.

WARNING

– The computers and impact sensors contain sensitive components, **do not drop them**.

– Do not put covers on the front seats (except for Renault products).

– Do not place objects in the airbag deployment area.

– When working under the vehicle (on the bodywork, sill panel etc.), it is vital that you lock the airbag computer using a fault finding tool and switch off the ignition.

– For special notes on the removal and replacement of seat trims, it is essential to read the **Bodywork** section.

IMPORTANT: It is vital that pyrotechnic systems (front pretensioners and airbags) are checked using the diagnostic tools:
– following an accident which did not trigger the devices,
– following theft or attempted theft of the vehicle,
– before selling a used vehicle.

After an impact:
– when the buckle pretensioner is triggered, the seat frame must be replaced and also the seat belt if it was being worn,
– when the rear pyrotechnic retractors are triggered, the seat belt - pyrotechnic retractor assembly and the rapid connection must be removed,
– if the driver front airbag is triggered, the steering wheel and its mounting bolt must be replaced,
– if the passenger front airbag was triggered, the dashboard and cross member must be replaced,
– if a side seat airbag is triggered, the seat frame must be removed.

GETtheMANUALS.org

OPERATION

During a front impact of sufficient severity:

- **Seat belts** fitted with **electrical locking retractors** hold the driver and the passenger.
- **The front pretensioners** and the **rear pyrotechnic retractors** tighten the seat belts so that they fit tightly against the body.
- **The Renault Protection System** (PRS) limits the force of the seat belt against the body.
- **The front airbags** inflate:
  - from the centre of the steering wheel to protect the driver's head
  - from the dashboard to protect the front passenger's head.

NOTE: the inflation volume of the driver's airbag may be modified by the computer according to:
- the position of the driver's seat (see **Under-seat switch**) section,
- the severity of the impact.

During a side impact of sufficient severity:

- The **front side chest airbag**, located in the corresponding front seat (impact side) deploys on the door side in order to protect the front seat occupant's chest.
- Depending on the version, the **rear side chest airbag**, located on the vehicle body (impact side) deploys on the side door in order to protect the rear seat occupant's chest.
- The **curtain airbag** (impact side) deploys on the door side to protect the front and rear passengers' heads.

The **front pyrotechnic retractors** and the **rear pyrotechnic retractors** may be triggered during a side impact, a rear impact or a turn (depending on the severity).

WARNING: when triggered, a pyrotechnic gas generator produces a detonation and a small amount of smoke.

NOTE: Power supply to the computer and ignition modules is usually provided by the vehicle battery. Nevertheless, a power reserve capacity is incorporated into the airbag computer in case of battery failure on impact.

GETtheMANUALS.org

AIRBAG COMPUTER LOCKING PROCEDURES

Before removing the computer or before any operation on the airbag and pretensioner systems, it is vital that you lock the computer using the diagnostic tools:

1 Select the **Renault vehicle fault finding** menu,
2 Select and confirm the vehicle model
3 Carry out the multiplex network test,
4 Select and validate the **Airbag** system to be checked
5 Select the **command** menu.
6 Select and confirm the **Set up** (NXR) or Actuators (Clip) function,
7 Confirm the **VP006 Computer locking** line,
8 In the **State** menu, check that the unit is locked. The **ET073 Computer locked with tool** state must be active and the airbag warning light on the instrument panel must be on (new computers are delivered in this state).

NOTE: to unlock the airbag computer, use the same method, but confirm the **VP007 Computer unlocking** line.

The **ET073 Computer locked with tool** state should not be active and the airbag warning light on the instrument panel should switch off.

NOTE:
In the event of incorrect operation of these systems during an impact, it is possible to check that no fault was present before the impact using the diagnostic tools.
After locking following an impact, it is possible to check the supplied trigger lines with the breakdown contexts reading command on the diagnostic tool.

WARNING LIGHT ON THE INSTRUMENT PANEL

This warning light verifies correct operation of:
- front **pretensioners**,
- **rear** pyrotechnic retractors,
- **front airbags**,
- **front chest airbags**,
- **side curtain airbags,**
- **rear chest airbags** (depending on the version),
- the **battery** (checks the supply voltage),

It should light up for a few seconds when the ignition is switched on, then switch off (and remain off).

If it does not come on when the ignition is switched on or if it comes on when the vehicle is in motion, this means there is a fault in the system (see **fault finding** document).

NOTE: under certain starting conditions, the warning light may come on briefly and then go out.

IMPORTANT: a front seat belt fault or seat belt computer fault does not switch on the airbag warning light.

GETtheMANUALS.org

REMOVAL

IMPORTANT: before removing a safety system component, lock the airbag computer using the diagnostic tool.
When this function is activated all the triggering lines are disabled and the airbag warning light on the instrument panel lights up (ignition on).

Move the seats fully forward.

Remove the screws (1) located to the rear of the console.

Remove the rear console cover (2):
– pull the central section,
– unclip the upper section,
– remove the cover.

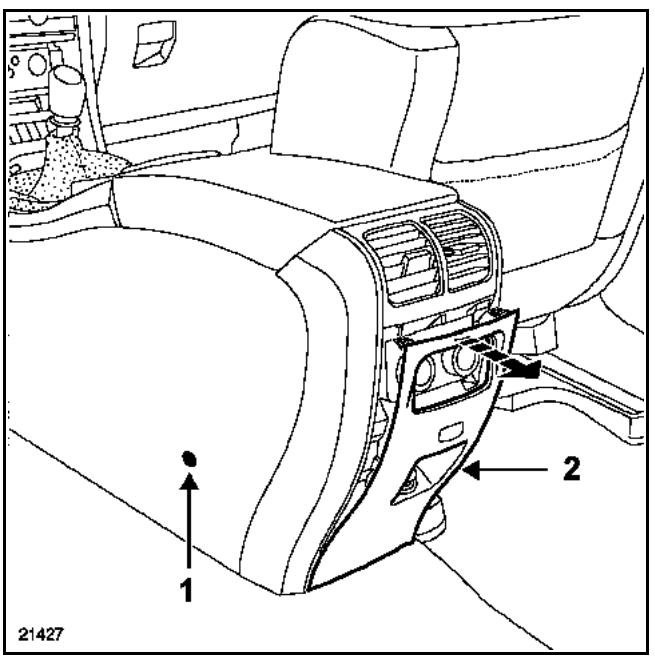

Remove:
– the clip-on sides of the console (3) by pulling upwards along the instrument panel,
– the speed control bellows,
– the Central Communication Unit (depending on the version), using the **MS tool 1373** tools,
– the upper side of the console (4),
– the front mounting (5) of the air conditioning and RENAULT Card reader control panel,

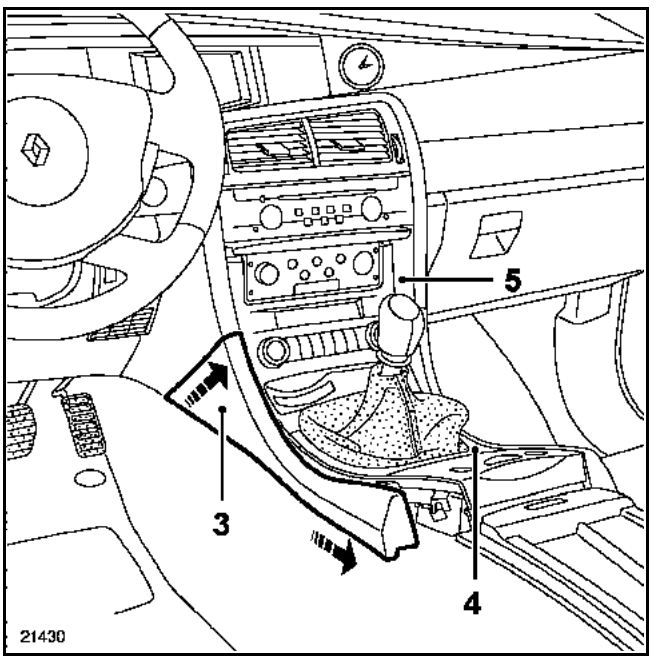

– the console mounting bolts (6).

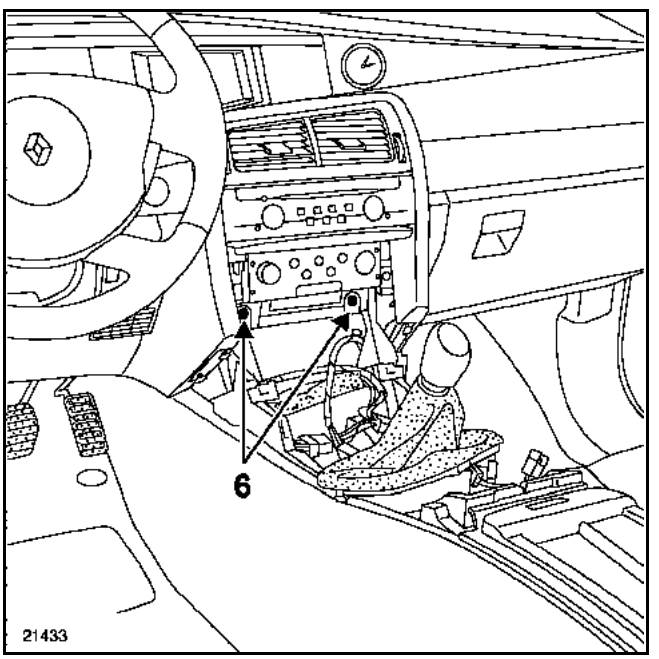

GETtheMANUALS.org

Lift the rear of the console. Remove the assembly.

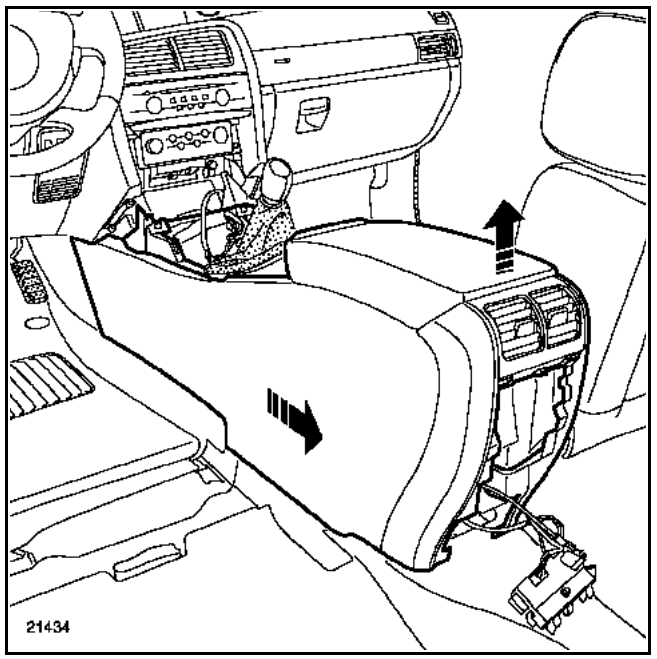

Disconnect the airbag computer (7), then remove the mountings.

NOTE: it is not necessary to remove the air duct.

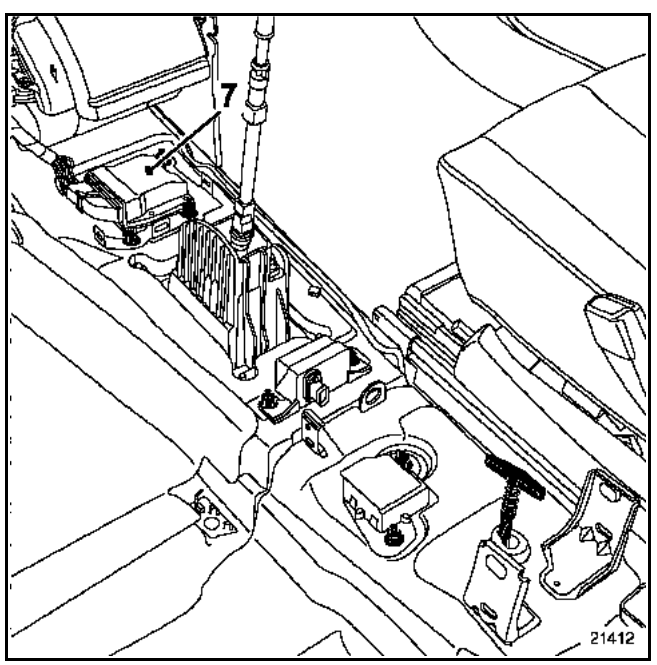

WARNING:

- When working under the vehicle (exhaust system, bodywork, etc.), do not use a hammer or transmit impacts to the floor without having locked the computer using the diagnostic tool.
- An electrical aftermarket accessory (speaker, alarm unit or any device which could generate a magnetic field) must not be installed in the immediate vicinity of the airbag/pretensioner computer.

REFITTING

Fit the computer in the direction shown by the arrow.

Put the computer in place and then torque tighten the mountings to **0.8 daNm** before reconnecting the connector.

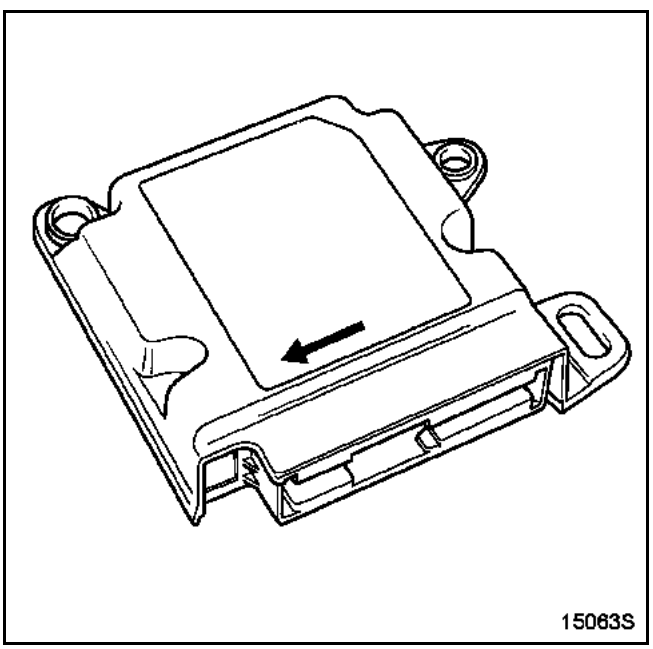

Disconnect the airbag computer, then check that there are no faults.

GETtheMANUALS.org

CONNECTION

Yellow 75-track connector

Track	Description
1	Not used
2	+ Buckle pretensioner: driver
3	- Pretensioner: rear left
4	+ Buckle pretensioner: passenger
5	- Rear pretensioner: passenger
6 to 25	Not used
26	- Buckle pretensioner: driver
27	- Buckle pretensioner: passenger
28	- Lap-belt pretensioner: driver
29	Not used
30	+ After ignition
31	Earth
32	Not used
33	Not used
34	Diagnostic line K
35	- Airbag: driver, small volume
36	+ Airbag: driver, large volume
37	- Airbag: passenger, small volume
38	+ Airbag: passenger, large volume
39	Not used
40	Not used
41	- Airbag: front chest, driver
42	+ Airbag: front chest, passenger
43	- Airbag: curtain, driver
44	+ Airbag: curtain, passenger
45	+ Sensor: side, driver
46	+ Sensor: side, passenger
47	Not used
48	Not used
49	- Airbag: side, rear chest, driver's side
50	+ Airbag: side, rear chest, passenger's side
51	+ Pretensioner: rear, driver
52	- Rear pretensioner: passenger
53	+ Pretensioner: lap-belt, driver
54	Not used
55	Front seat belt retractor computer
56	Driver's seat position sensor
57	Not used
58	Multiplex connection
59	Multiplex connection
60	+ Airbag: driver, small volume
61	- Airbag: driver, large volume
62	+ Airbag: passenger, small volume
63	- Airbag: passenger, large volume
64	Not used
65	Not used
66	+ Airbag: front chest, driver
67	- Airbag: front chest, passenger
68	+ Airbag: curtain, driver
69	- Airbag: curtain, passenger
70	- Sensor: side, driver
71	- Sensor: side, passenger
72	Not used
73	Not used
74	+ Airbag: side, rear chest, driver's side
75	- Airbag: side, rear chest, passenger's side

NOTE: a special feature of the computer and distributor connectors is that they short circuit the various ignition lines which are disconnected. Shunts located opposite each pretensioner line or airbag line prevent incorrect triggering of these systems (by aerial effect for example).

GETtheMANUALS.org

CONFIGURING THE COMPUTERS

New computers identified as **ACU3** by the diagnostic tools (except **XR25**) are provided with **pretensioners/ rear seat belt retractors** and **side** and **rear chest airbags** already configured and with no disabling system.

If these configurations have not been performed, the airbag warning light will stay on.

With NXR diagnostic tools

1 Select the **Renault vehicle fault finding** menu.
2 Select and confirm the vehicle type.
3 Select and confirm the **Airbag** system.
4 Select the **Command** menu.
5 Select and confirm the **Method** function, then **System components configuration**.
6 Check the **present** configurations.
7 Select the line to be changed and confirm.
8 The tool displays the **desired** configuration.
9 Press the **continue** button. The tool displays the **desired** configuration, then **Are you sure you want to perform the above configuration?**
10 Press the **yes** button to activate the configuration.
11 Switch the ignition off and on again to validate the configuration
12 Return to the **System components configuration** menu to check the changes.

With CLIP diagnostic tools

1 Select the **Renault vehicle fault finding** menu.
2 Select and confirm the vehicle type.
3 Select and confirm the **Airbag** system.
4 Select the **Command** menu.
5 Select and confirm the **Programming** function.
6 In the **Ignition module configuration** menu.
7 Check the configurations. Select **Reverse**, then **Configure** to make the changes.
8 Press the **yes** button to activate the configuration.
9 Switch the ignition off and on again to validate the configuration
10 Return to the **Ignition module configuration** menu to check the changes.
11 Carry out the same procedure to configure the side impact sensors in the **Side sensor configuration** menu and for the **impact information** connection in the **System components configuration** menu.

These vehicles are not fitted with **ISOFIX** or **KEY** systems.

NOTE: the topology of the multiplex network is stored in the airbag computer. It is essential to check it during the first multiplex network test when the computer is replaced. Refer to **Section 88B**.

GETtheMANUALS.org

IMPORTANT: before removing a safety system component, lock the airbag computer using the diagnostic tool.
When this function is activated all the triggering lines are disabled and the airbag warning light on the instrument panel lights up (ignition on).

REMOVAL

They are located on either side behind the B-pillar lining.

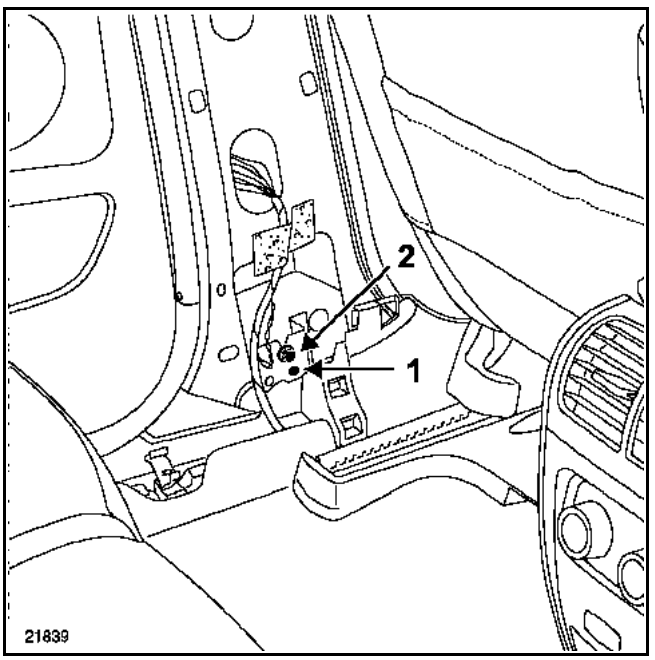

WARNING:
When a side airbag is triggered, the computer locks permanently and switches on the airbag warning light on the instrument panel.
The side impact sensor and the computer must then be replaced (certain components lose their nominal settings after transmission of ignition power).

REFITTING

To refit it, position the sensor by means of its lug (1) and attach its mounting (2) to the vehicle before reconnecting its connector (**tightening torque: 0.8 daNm**).

After connecting the computer connector, run a systems check and then unlock the computer.

NOTE: these sensors do not need to be programmed by the diagnostic tool.

GETtheMANUALS.org

UNDER-SEAT SWITCH

The driver's seat is fitted with a runner position sensor. This switch adjusts the inflation of the driver's front airbag (high or low volume) according to the position of the driver's seat.

NOTE: the inflation volume of the driver's airbag is not modified by the seat position.

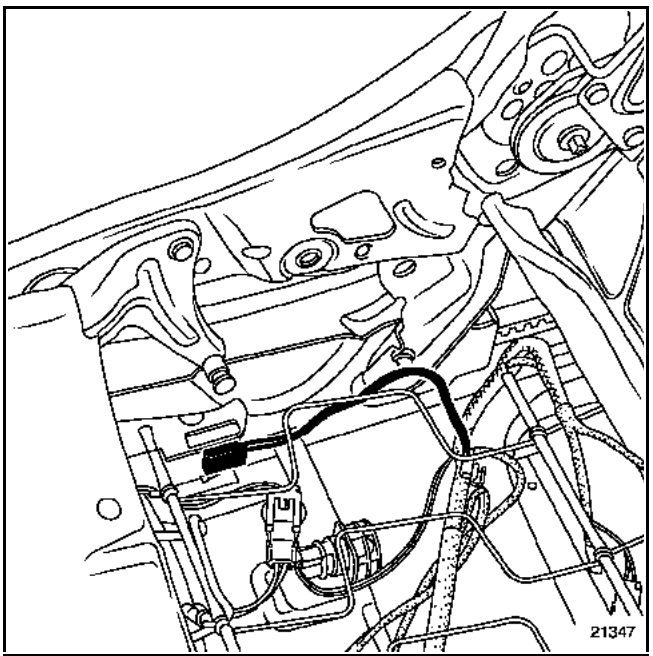

The resistance of the seat position sensor can be checked using the diagnostic tools:

- Seat forward: sensor resistance = **400 Ω**
- Reclined seat: sensor resistance = **100 Ω**

GETtheMANUALS.org

A special computer is used to manage the electrically locked front seat belt retractors fitted to the seats. It comprises:
– an electronic safety sensor,
– a connection to the airbag computer,
– two control lines (lock/unlock) for the front seat belt retractors.

REMINDER: the airbag warning light does not switch on if there is a fault on one of these components.

REMOVAL

IMPORTANT: before removing a safety system component, lock the airbag computer using the diagnostic tool.
When this function is activated all the triggering lines are disabled and the airbag warning light on the instrument panel lights up (ignition on).

Move the seats fully forward.

Remove the screws (1) located to the rear of the console.

Remove the rear console cover (2):
– pull the central section,
– unclip the upper section,
– remove the cover.

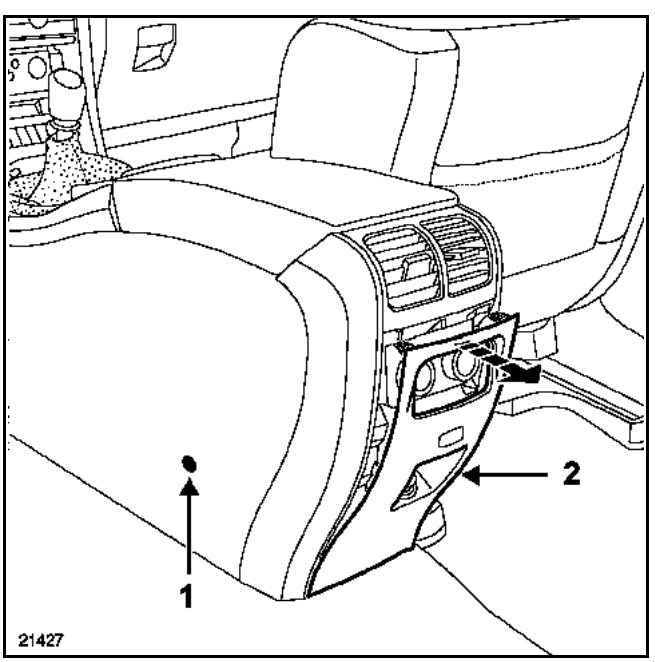

Remove:
– the clip-on sides of the console (3) by pulling upwards along the instrument panel,
– the speed control bellows,
– the Central Communication Unit (depending on the version), using **MS tool 1373**,
– the upper side of the console (4),
– the front mounting (5) of the air conditioning and RENAULT Card reader control panel,

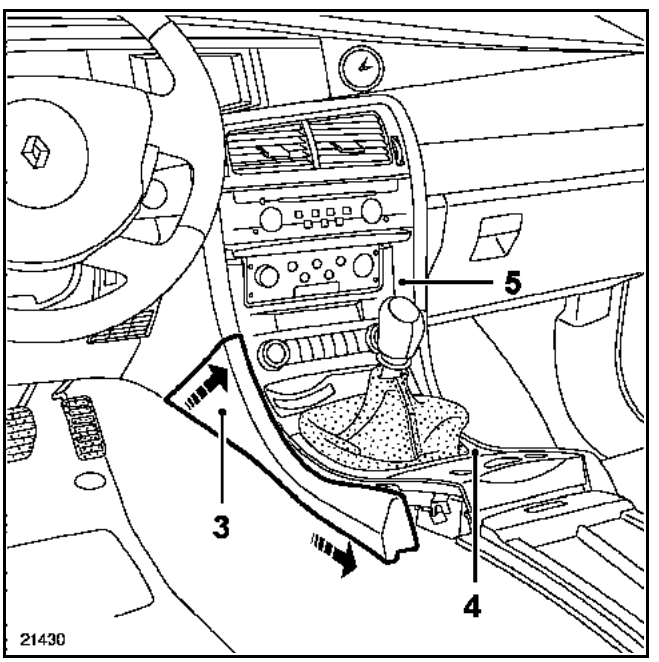

– the console mounting screws (6).

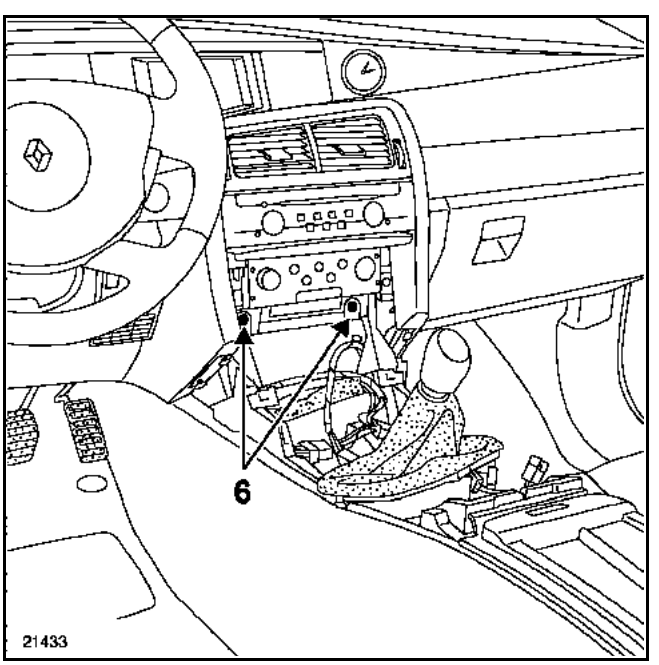

GETtheMANUALS.org

Lift the rear of the console. Remove the assembly.

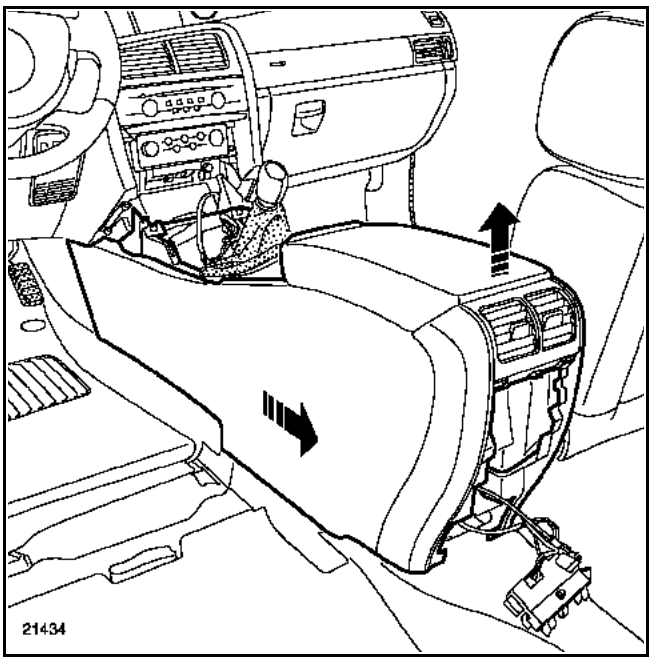

Remove the air duct.

Disconnect the computer (7), then remove the mountings.

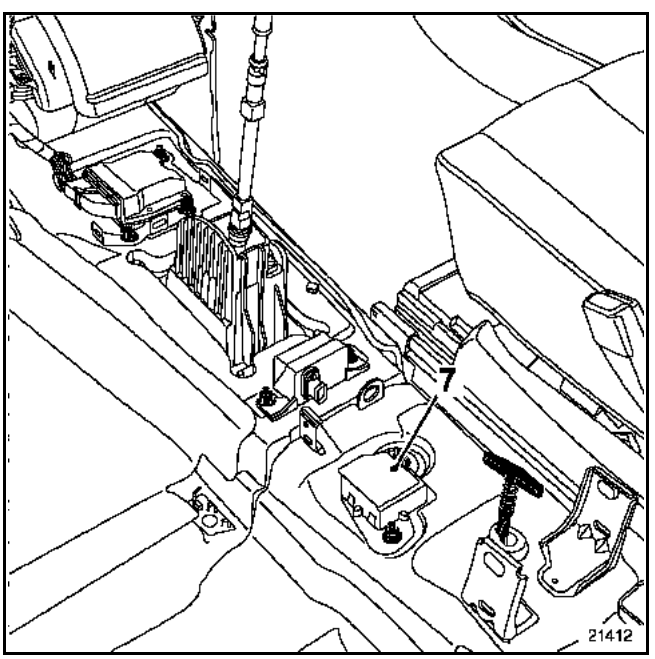

REFITTING

Tighten the mountings to **a torque of 0.8 daNm** before connecting the connector.

CONNECTION

12-track connector

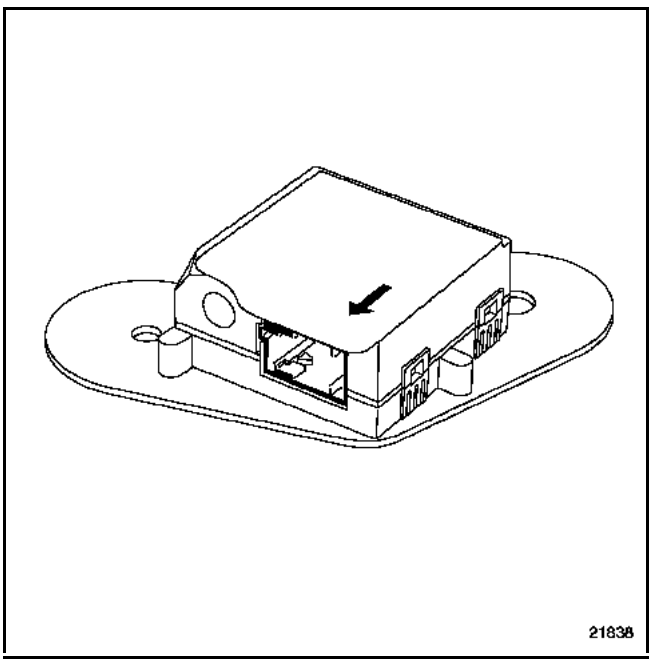

Track	Description
1	Earth
2	Not used
3	UCH supply
4	Not used
5	Passenger's side retractor control
6	Passenger's side retractor control
7	Not used
8	Airbag computer connection (track 55)
9	Not used
10	Not used
11	Driver's side retractor control
12	Driver's side retractor control

GETtheMANUALS.org

The seat belt retractor can be controlled electrically.

The retractor is controlled by a special computer (12 tracks) connected to the airbag computer.

The electric retractor cannot be separated from the seat belt and the lap-belt pretensioner for the purposes of replacement.

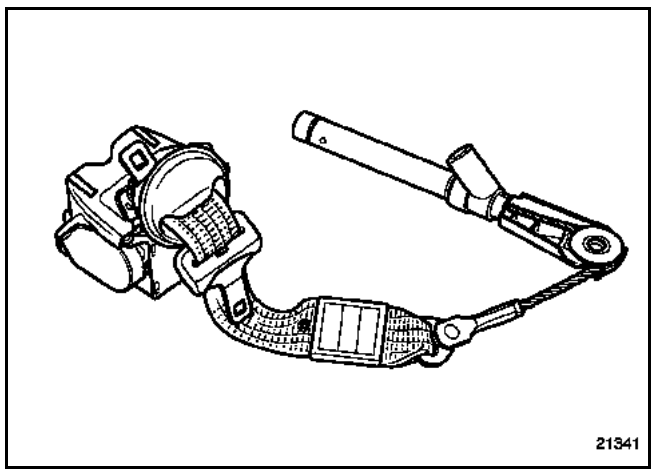

REMINDER: the airbag fault warning light does not come on if there is a fault on the electric retractor or seat belt computer.

REMOVAL

It is necessary to strip and remove the seat in order to remove the electrically locking seat belt retractor/seat belt/lap-belt pretensioner assembly. Refer to the section on **Bodywork**.

Disconnect the electric retractor and pretensioner connectors.

Remove:
– the retractor mounting (1),

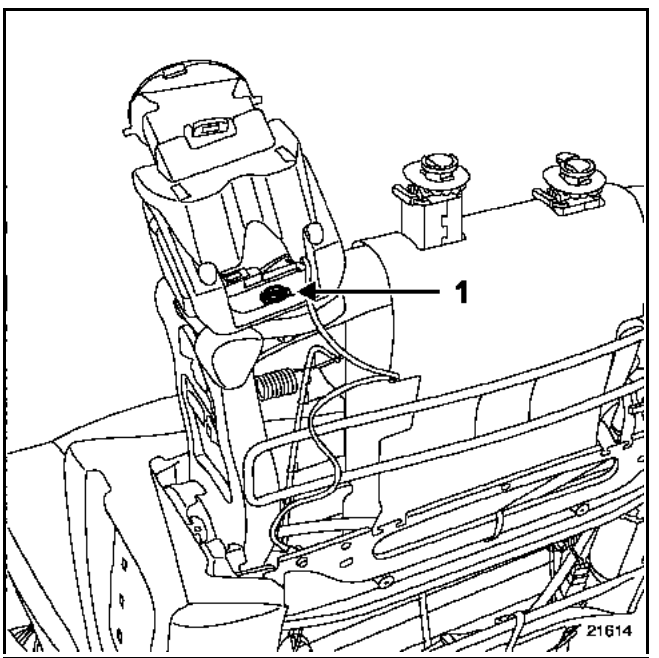

– the pretensioner mounting (2).

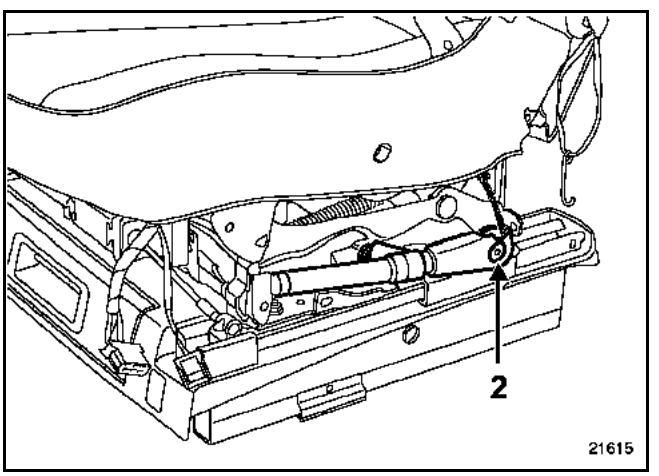

GETtheMANUALS.org

REFITTING

IMPORTANT: refer to the Destruction procedure section when scrapping a pretensioner that has not been triggered.

Tighten the pretensioner mounting screw (1) to a torque **of 2.1 daNm**.

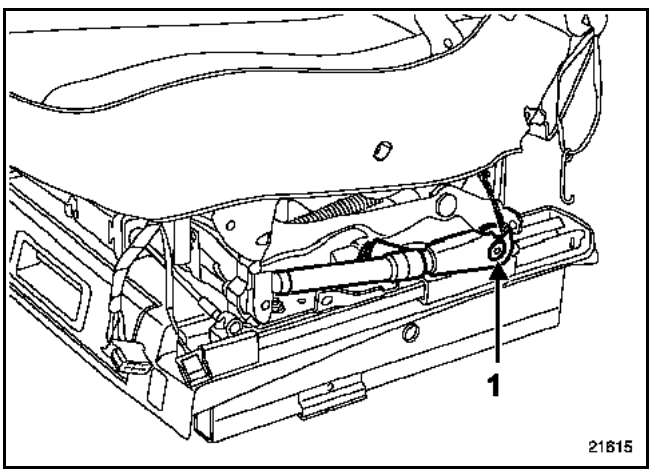

Tighten the retractor mounting screw (2) to a torque of **2.1 daNm**.

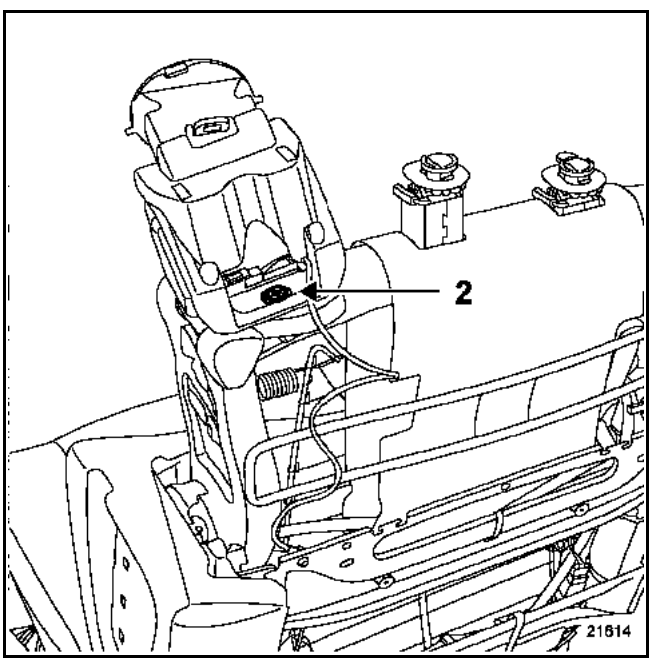

REMINDER: if the seat belt pretensioners are triggered, it is essential to replace certain parts. Refer to the section on **Precautions for repair**.

Follow the correct routing of the wiring and the wiring mounting points under the seat.

Before removing the seat, visually check the condition of the connectors on the seat base and the vehicle body.

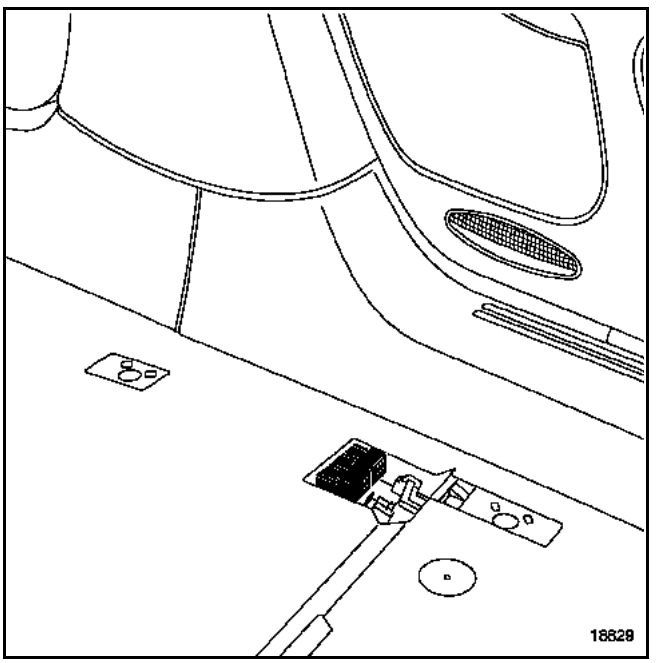

Refit the seat and conform to the mounting tightening torques.

After replacing faulty parts and reconnecting the connectors, carry out a check using the diagnostic tool.

If everything is correct, unlock the airbag computer.

GETtheMANUALS.org

The vehicles are fitted with front seat belt pretensioners:
- a buckle pretensioner (driver and passenger),
- a lap-belt pretensioner (driver) which is inseparable from the seat belt (refer to the section on the **front seat belt retractor**).

REMOVAL

IMPORTANT: Before removing a safety system component, lock the airbag computer using the diagnostic tool.
When this function is activated all the triggering lines are disabled and the airbag warning light on the instrument panel lights up (ignition on).

Fold down the seat with the seat runner adjustment in the middle.

Remove the seat and its mounting (refer to the **Bodywork** section).

REMINDER: the seat is fitted with an automatic connector which does not authorize operations.

After removing the seat, remove:
– the plastic cover,
– the pretensioner connector located under the front seat,
– the pretensioner assembly.

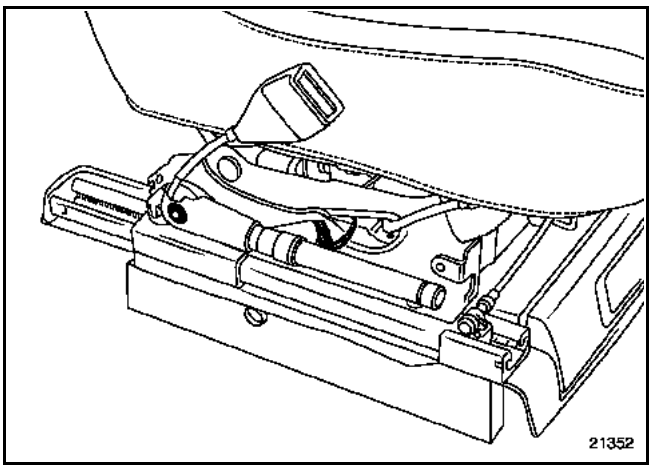

Special features of the seat belt connector

To unclip the connector, remove the mounting bolts from the two buckle half-shells.

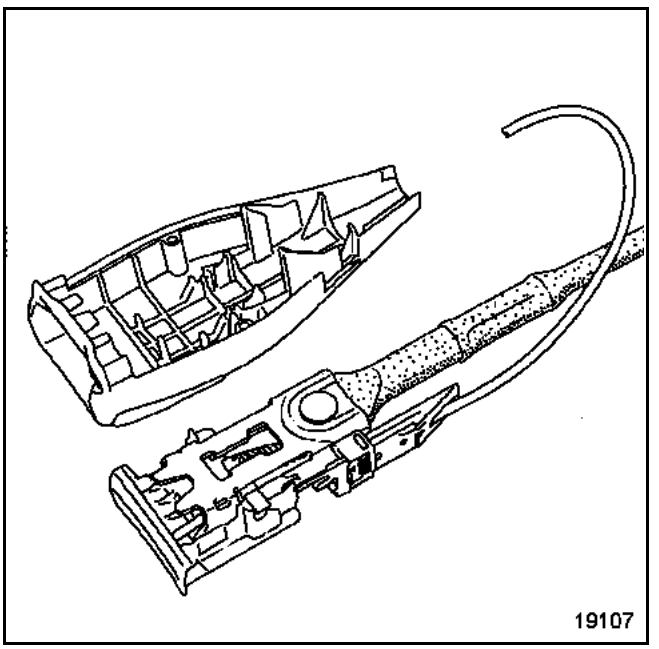

GETtheMANUALS.org

REFITTING

IMPORTANT: Refer to the Destruction procedure section when scrapping a pretensioner that has not been triggered.

REMINDER: if the seat belt pretensioners are triggered, it is essential to replace certain parts. Refer to the section on **Precautions for repair**.

Follow the correct routing of the wiring and the wiring mounting points under the seat.

The mounting screw (1) to a **torque of 2.1 daNm**.

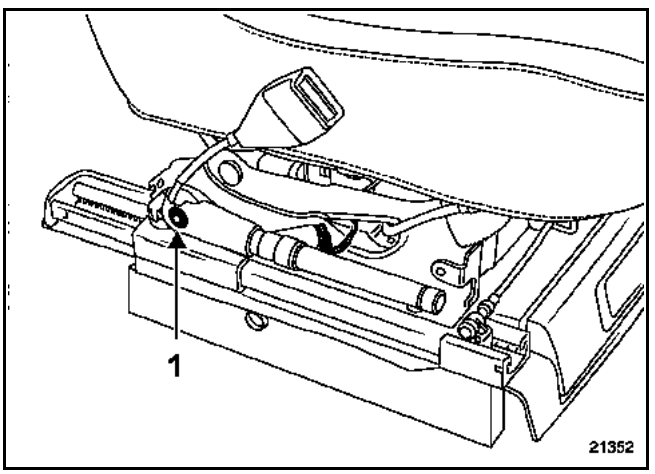

Before removing the seat, visually check the condition of the connectors on the seat base and the vehicle body. Refer to **Section 88A**.

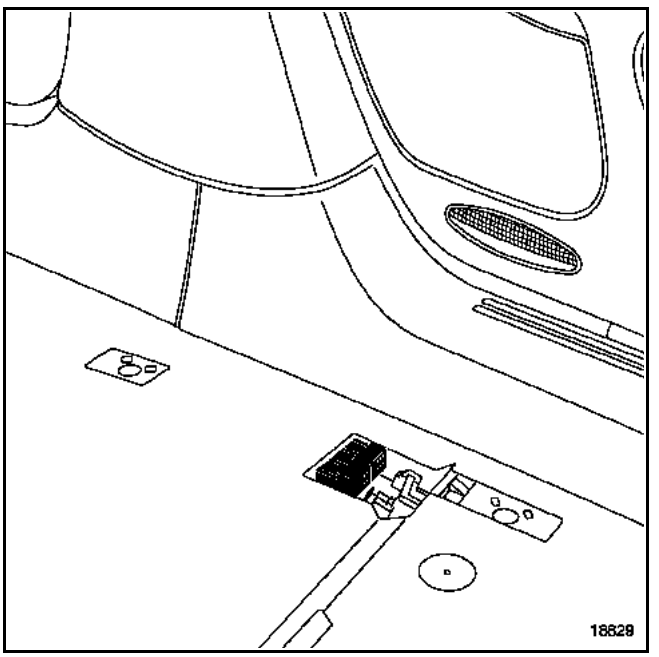

Refit the seat and conform to the tightening torques (**tightening torque: 4.4 daNm**).

After replacing faulty parts and reconnecting the connectors, carry out a check using the diagnostic tool.

If everything is correct, unlock the airbag computer.

GETtheMANUALS.org

The rear seat belts (side seats) are fitted with pyrotechnic retractors. To remove the assembly, it is necessary to remove the luggage compartment trim and quarter panel trim. Refer to the method described in the **Bodywork** section.

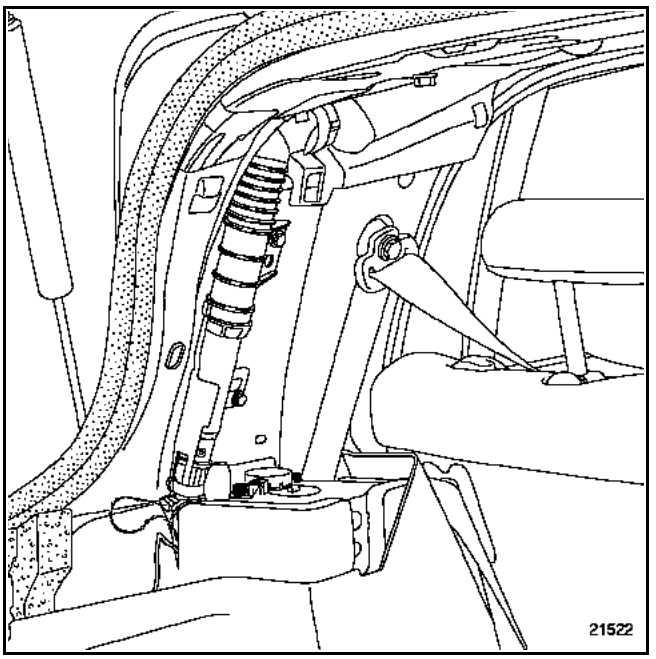

Disconnect the connector and earth wire and remove the mounting bolt.

Separate the seat belt from the rear seat squab by pressing on the bolt (1).

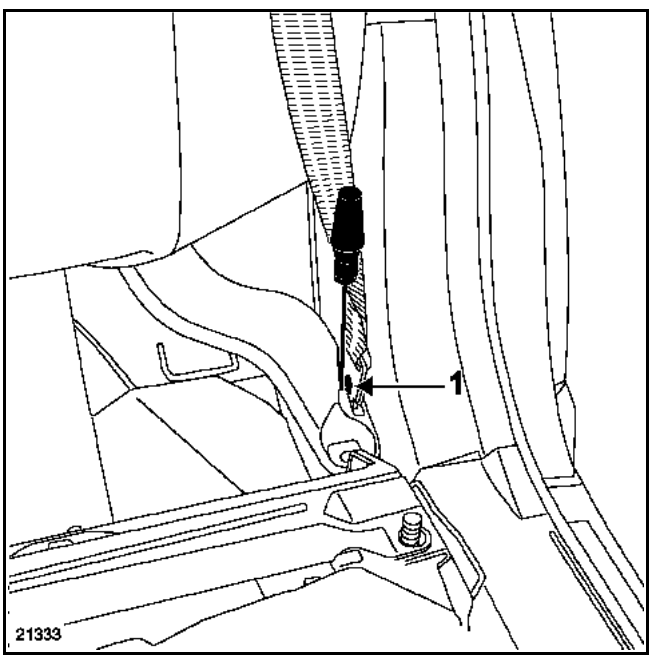

REFITTING

IMPORTANT: Refer to the Destruction procedure section when scrapping a pyrotechnic retractor that has not been triggered.

REMINDER: If the pyrotechnic retractors are triggered, it is essential to replace certain parts. Refer to the section on **Precautions for repair**.

Follow the correct routing of the wiring and the wiring mounting points under the seat.

The mounting bolt **to a torque of 2.1 daNm**.

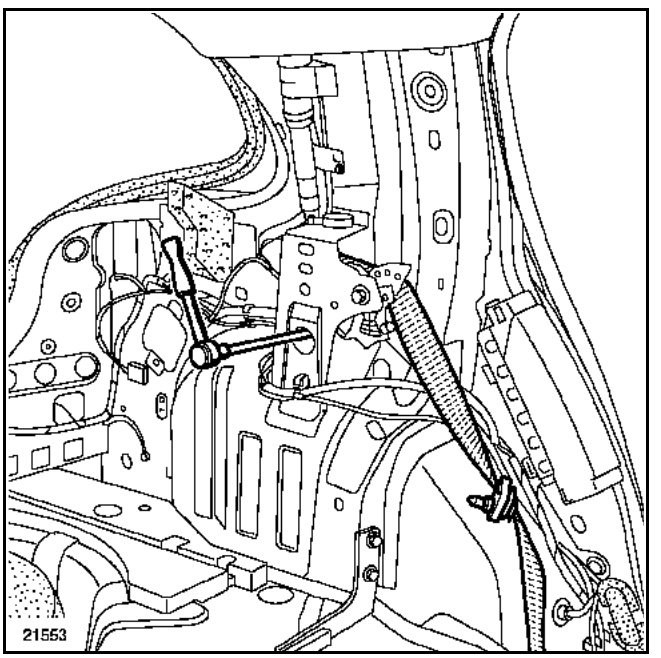

After replacing faulty parts and reconnecting the connectors, carry out a check using the diagnostic tool.

If everything is correct, unlock the airbag computer.

GETtheMANUALS.org

RAPID CONNECTION

If the seat belt pretensioners are triggered, the rapid connection and rear seat belts must always be replaced, if they were being worn at the time. If you have any doubts about whether the seat belt was being worn, you should replace it.

REMOVAL

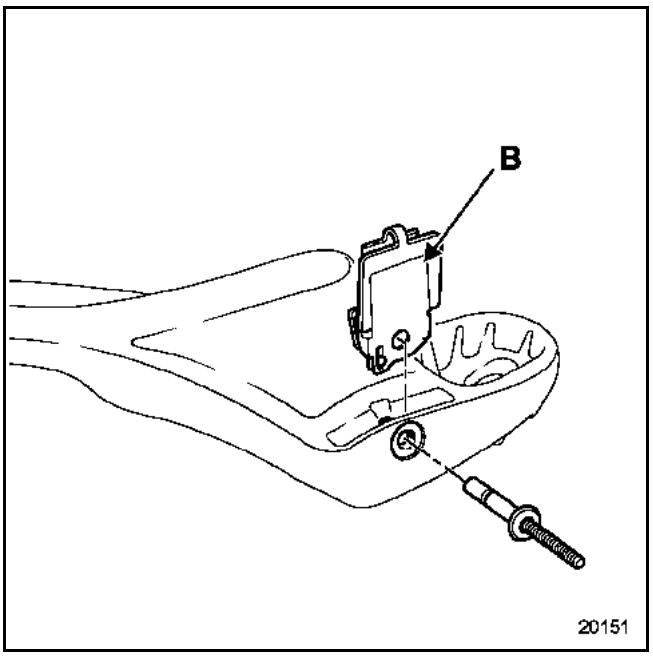

Grind down the head and drive the rivet out.

REFITTING

Position the connection (B) in its housing **part number: 82 00 024 242**.

Assemble the connection with the specific rivet **part number: 77 01 049 320**.

GETtheMANUALS.org

The **driver's airbag** module is fitted with an inflatable bag in two volumes (small or large volume).

It inflates according to the severity of the impact or the adjustment position of the driver's seat.

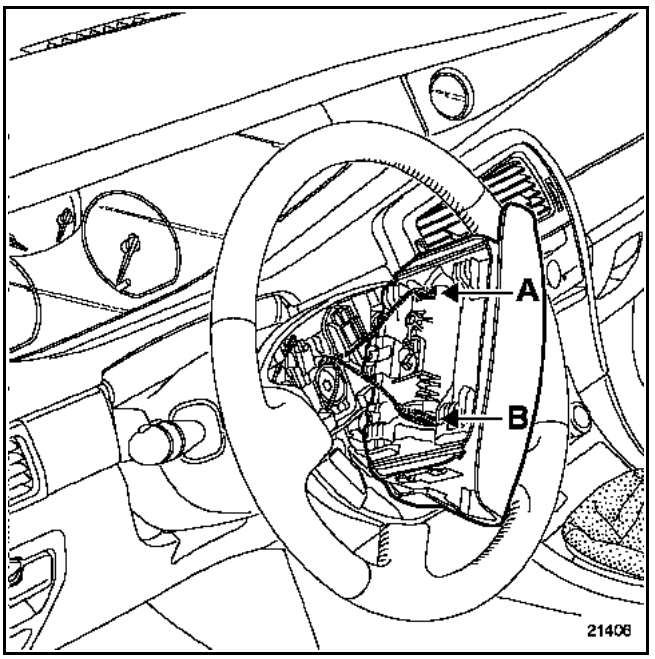

When triggered, the inflatable bag deploys by bursting through the steering wheel cover.

REMOVAL

IMPORTANT: Before removing a safety system component, lock the airbag computer using the diagnostic tool.
When this function is activated all the triggering lines are disabled and the airbag warning light on the instrument panel lights up (ignition on).

IMPORTANT: Whenever the steering wheel is removed, it is essential to disconnect the airbag connectors (A) and (B).
The airbag has a connector which short circuits if it is disconnected to prevent accidental triggering.

Insert a screwdriver into the opening (1) behind the steering wheel.

Raise (2) the airbag in order to slide it out.

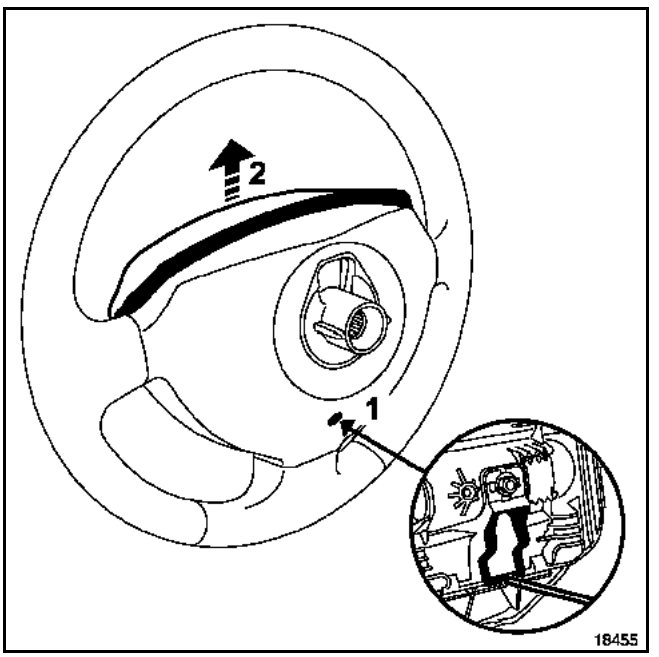

Unclip the connector safety clips.

Disconnect the two generator power supply connectors.

IMPORTANT: refer to section describing the Destruction procedure when scrapping a driver's airbag that has not been triggered.

GETtheMANUALS.org

REFITTING

REMINDER: if the driver's airbag is triggered, it is essential to replace certain parts. Refer to the section on **Precautions for repair**.

It is essential to replace the steering wheel mounting bolt (tightening torque of **4.4 daNm**) when the steering wheel is removed.

Position the two connectors and lock the safety clips,

Position the cushion on the steering wheel.

slide it backwards in order to clip it in place.

IMPORTANT:
After everything has been refitted, carry out a check using the diagnostic tool.
If everything is correct, unlock the airbag computer.

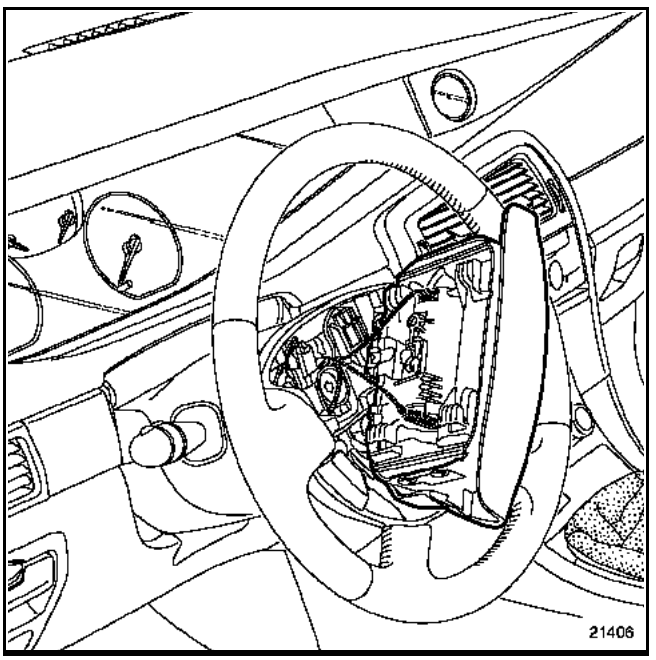

GETtheMANUALS.org

The **passenger's airbag** (PRS) is fitted with an inflatable bag in two volumes. It is mounted in the dashboard opposite the front passenger.

In this assembly, the airbag cushion is linked to the seat belt located opposite it. The Renault Protection System seat belt is calibrated specifically and is complementary to this type of airbag cushion.

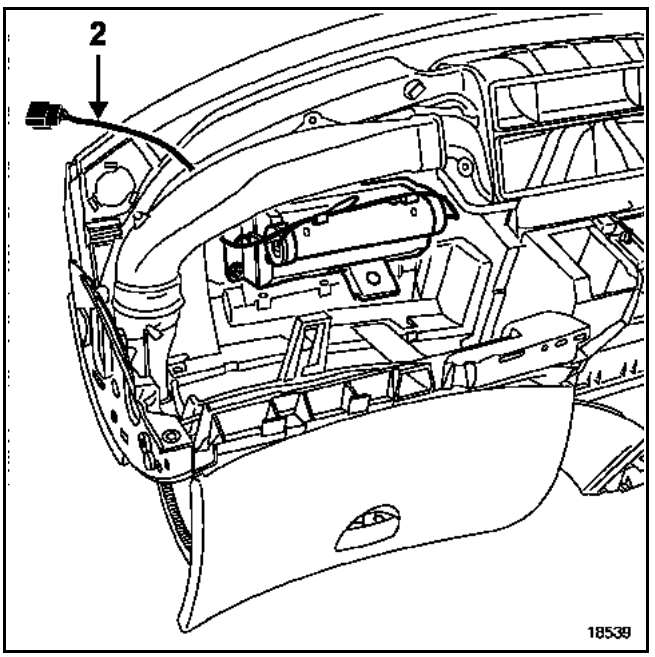

REMOVAL

IMPORTANT: Before removing a safety system component, lock the airbag computer using the diagnostic tool.
When this function is activated all the triggering lines are disabled and the airbag warning light on the instrument panel lights up (ignition on).

To remove the passenger airbag module it is necessary to remove the dashboard. To do this, refer to the method described in **Section 83A**.

Remove:
– the connector (1),
– the mounting screws.

NOTE: the passenger's airbag module is sold with its wiring (2) in spare parts.

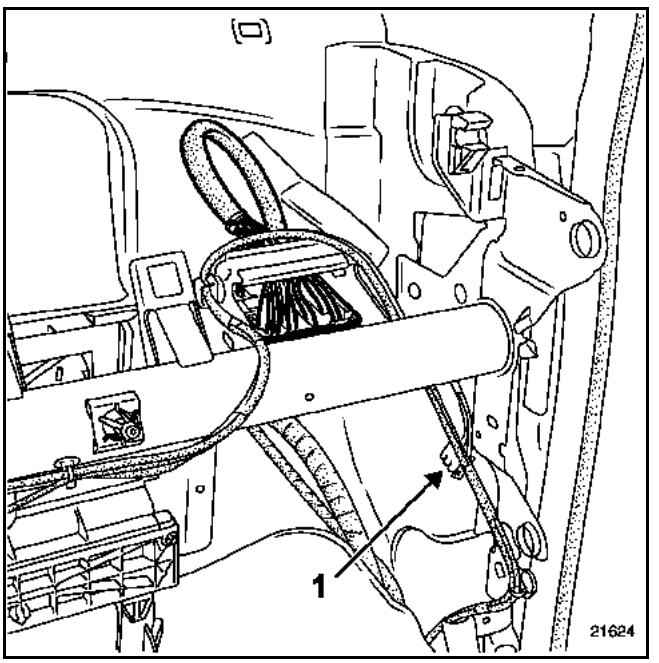

IMPORTANT: refer to section describing the Destruction procedure when scrapping a passenger's airbag that has not been triggered.

GETtheMANUALS.org

REFITTING

REMINDER: If the passenger airbag is triggered, it is essential to replace certain parts. Refer to the section on **Precautions for repair**.

Tighten the module to the correct torque (**0.8 daNm**) before reconnecting the connectors.

IMPORTANT: Attach a blue adhesive System suitability certified label sold under part number **77 01 040 153** (other vehicles).

Check the module using the diagnostic tool. If everything is correct, unlock the airbag computer.

Ignition module accessibility

It is possible to access the ignition module (at two levels) or the intermediate connector (1) of the passenger airbag module for fault finding behind the glovebox.

Remove the glovebox. The connector is located on the passenger side of the dashboard (near to the option relay/fuse box if present.

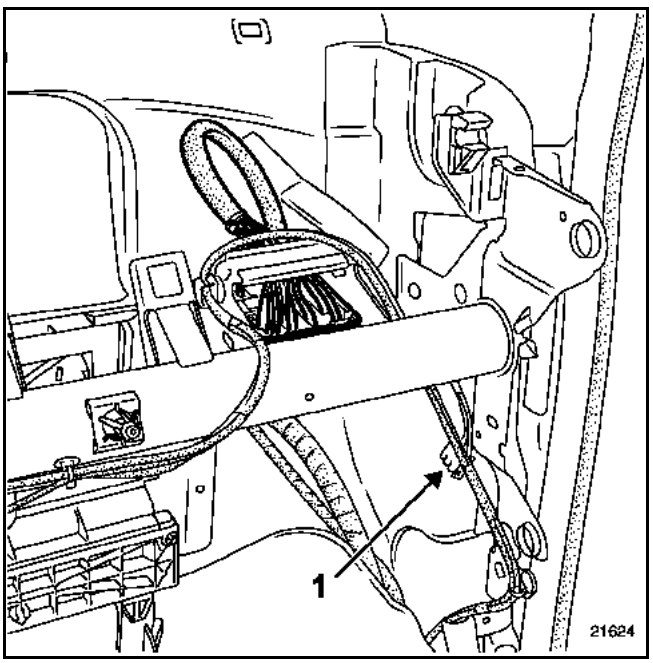

REMINDER: it is necessary to use the diagnostic tool to check the ignition module, as described in the **fault finding** section.

GETtheMANUALS.org

The **front side chest airbag** is fixed to the lower section of the seatback of each front seat on the door side.

When it is deployed, the inflatable bag tears the module cover and the foam and unfastens the trim.

NOTE: the system is operational when the ignition is switched on.

REMOVAL

IMPORTANT: Before removing a safety system component, lock the airbag computer using the diagnostic tool.
When this function is activated all the triggering lines are disabled and the airbag warning light on the instrument panel lights up (ignition on).

IMPORTANT: to service a seat fitted with an air bag and to ensure that it deploys correctly, **it is essential to follow the instructions** described in the **Bodywork** section (position, number, type of clips to be used, etc.).

Disconnect the vehicle battery.

Remove the seat.

Disconnect the airbag module and its earth wire (1) after disconnecting its connector (mark the wiring route and the mounting points).

IMPORTANT: If the system has not been triggered, and is to be refitted, do not open the airbag module. The airbag cushion must be folded in a special way.

Remove the attachment rivet then slide the airbag out.

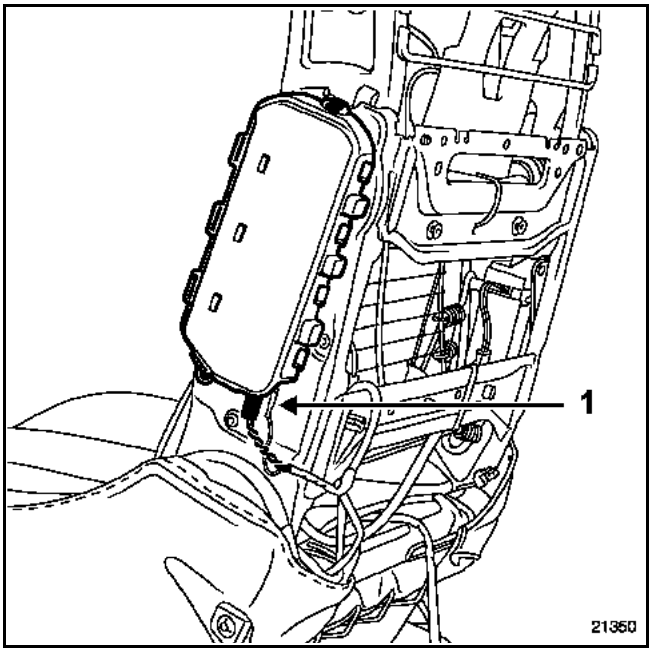

IMPORTANT: refer to the section describing the Destruction procedure when scrapping an airbag module which has not been triggered.

GETtheMANUALS.org

REFITTING

REMINDER: if the front chest airbag is triggered, it is essential to replace certain parts. Refer to the section on **precautions for repair**.

Position the airbag module on the frame.

Position the mounting rivet fitted to the module (special rivet).

Ensure that the earth wire is correctly connected to the airbag module.

Refit the wiring under the seat as before and respect the routing and the mounting points.

Reconnect the earth wire (1) and check that the connector is locked (2).

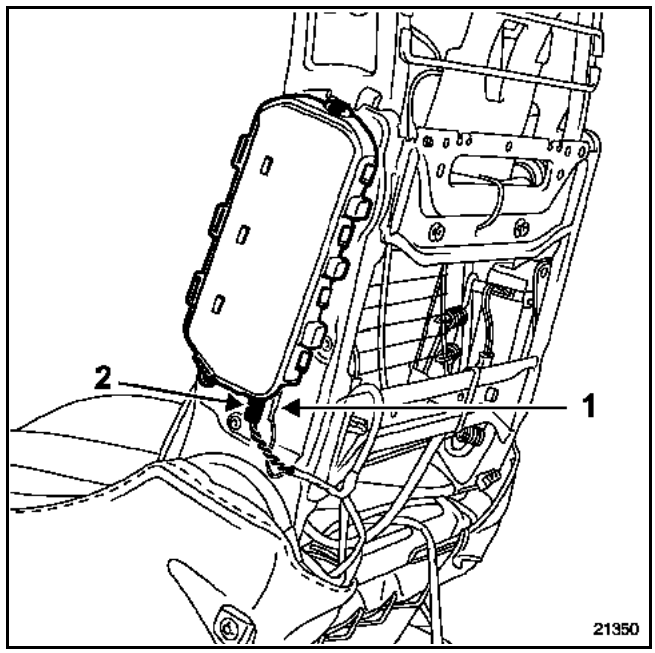

Reattach the trim, following the advice given in the **Bodywork** section (types of clip, their location, etc.).

Check the automatic seat connector (connection with vehicle wiring).

Refit the seat on the vehicle. Refer to the method described in the **Bodywork** section.

Check the module using the diagnostic tool.

If everything is correct, unlock the airbag computer. Otherwise see the **Fault finding** section.

WARNING: If these instructions are not followed the system may not operate normally and could even cause accidental triggering.

GETtheMANUALS.org

The rear side **chest** and **curtain** airbags are supplied by an 8-track connector.

This connector (1) is located behind the trim at the bottom of the left-hand rear step.

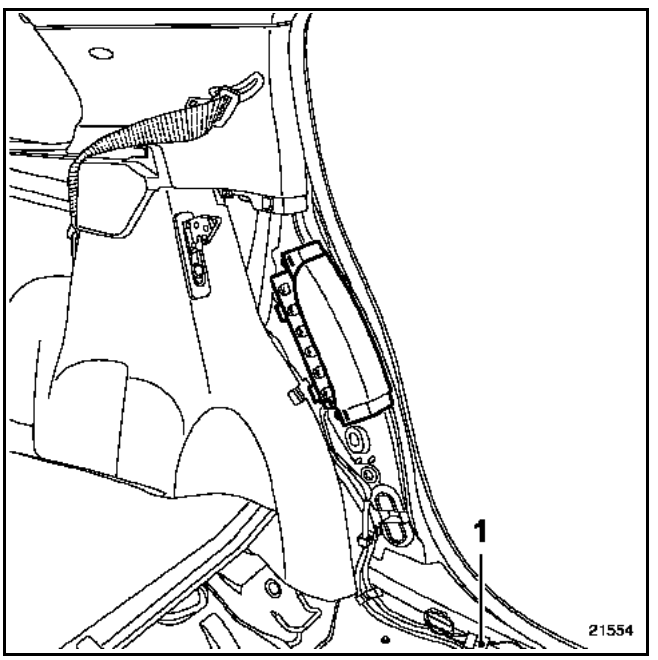

GETtheMANUALS.org

The **rear side chest airbag** is mounted behind the trim next to the rear seat squab.

When triggered, the inflatable bag deploys by bursting through the module cover.

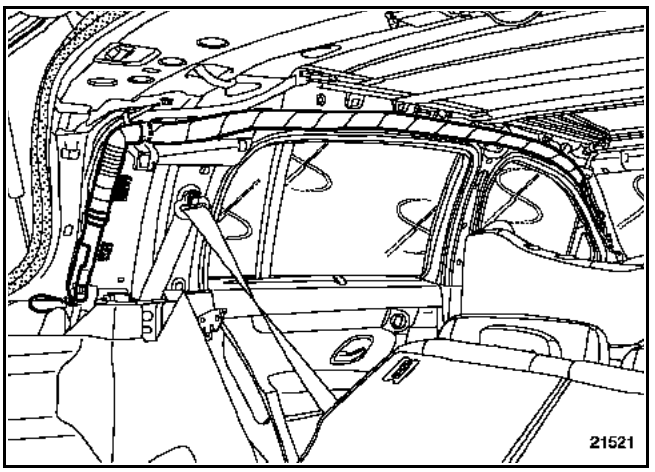

REMOVAL

IMPORTANT: Before removing a safety system component, lock the airbag computer using the diagnostic tool.
When this function is activated all the triggering lines are disabled and the airbag warning light on the instrument panel lights up (ignition on).

Fold the seat squab and the seatback of the rear seat.

Unclip the lining.

Release the airbag module wiring and its earth wire after disconnecting its connector.

Remove the airbag by unscrewing the two nuts (A).

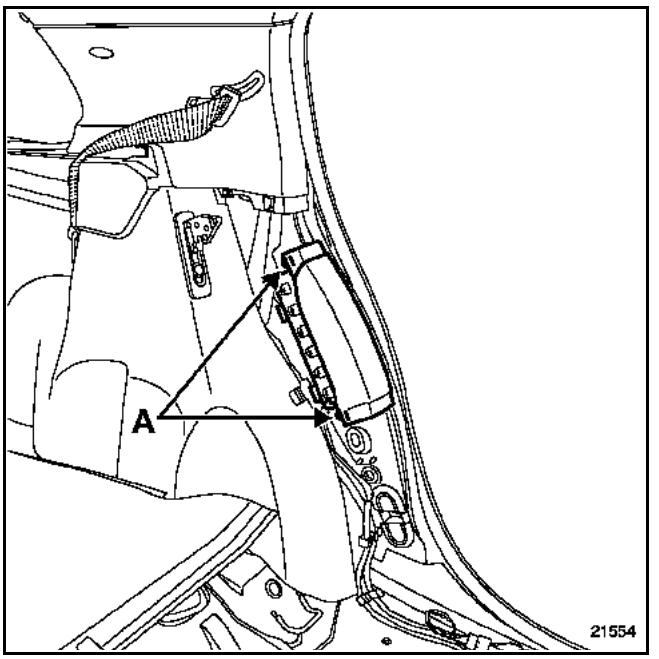

IMPORTANT: refer to the section describing the Destruction procedure when scrapping an airbag module which has not been triggered.

REFITTING

Attach the airbag module (**tightening torque: 0.4 daNm**).

Check that the earth wire is correctly reconnected to the airbag module by following the wiring route and the mounting points.

Connect the earth wire.

Verify that connector is locked correctly.

Check the module using the diagnostic tool.

If everything is correct, unlock the computer. Otherwise see the **Fault finding** section.

GETtheMANUALS.org

The **side curtain airbag** or **head airbag** module is attached behind the headlining.

The airbag detaches the headlining when it deploys.

To access the gas generator (1) it is necessary to remove the rear trim.

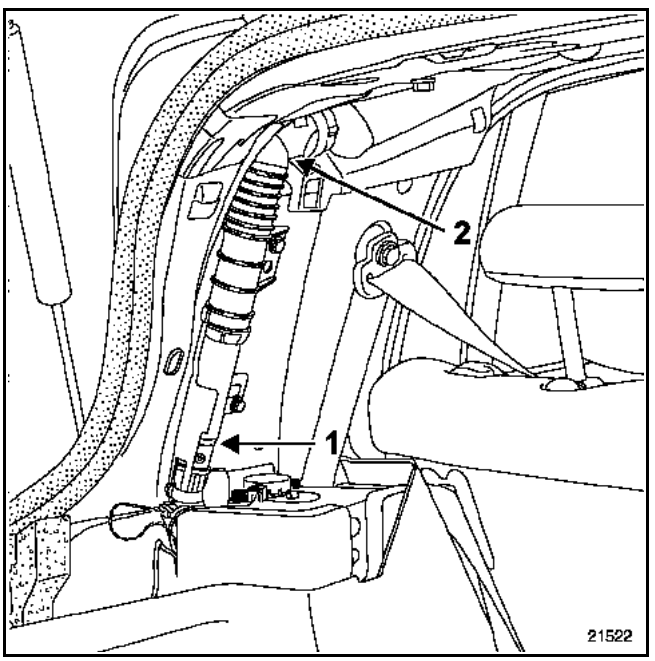

REMOVAL

IMPORTANT: Before removing a safety system component, lock the airbag computer using the diagnostic tool.
When this function is activated all the triggering lines are disabled and the airbag warning light on the instrument panel lights up (ignition on).

It is necessary to remove the headlining to remove the air bag module (2) and inflatable bag (refer to the **Bodywork** section).

Use tool **Car. 1597** to remove the grab handles. Refer to **section 88A**.

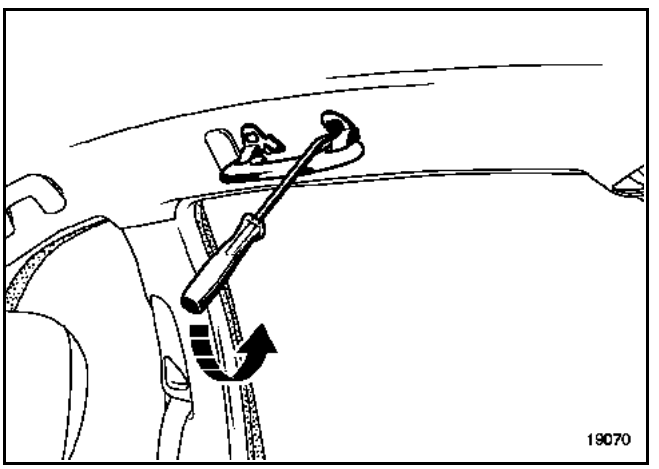

Detach the airbag module wiring after disconnecting its connector.

Remove the airbag assembly.

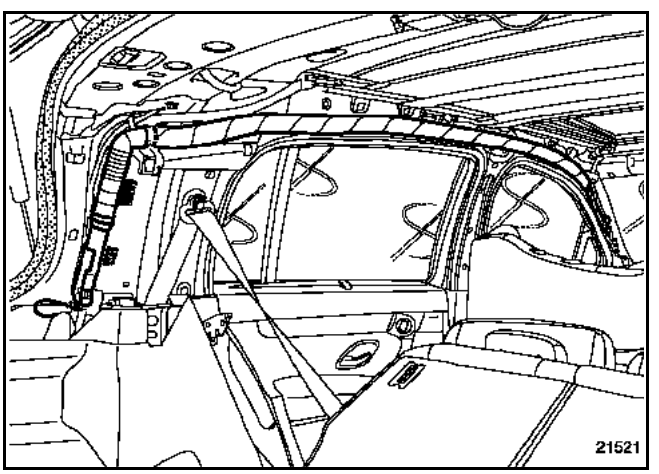

GETtheMANUALS.org

REFITTING

IMPORTANT: refer to the section describing the Destruction procedure when scrapping an airbag module which has not been triggered.

Position the airbag module without tightening the mounting screws.

Position the airbag starting with retainer (1).

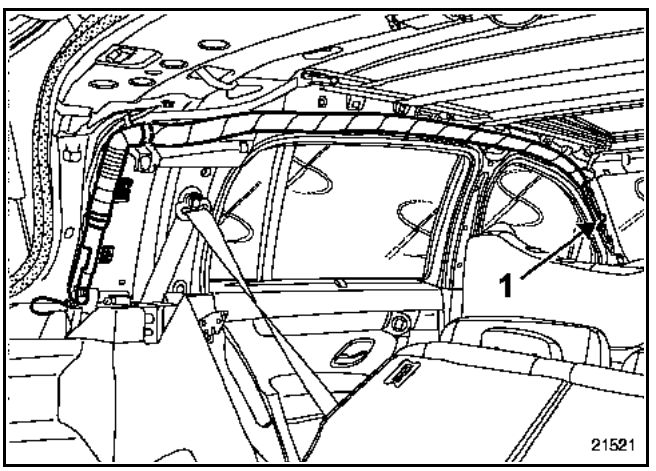

Position all the clips.

Tighten the mounting screws (**tightening torque: 0.8 daNm**).

Reconnect the connector, ensuring the locking clip is correctly located.

Check the module using the diagnostic tool. If everything is correct, unlock the airbag computer.

GETtheMANUALS.org

WARNING: Do not perform this operation if local regulations require a special procedure which is confirmed and circulated by the Diagnostic and Repair Methods Department.

In order to avoid any risk of an accident, the pyrotechnic gas generators must be triggered before the vehicle is scrapped or the part is scrapped.

Tool **Elé. 1287** and adapter leads **Elé. 1287-01** and **Elé. 1287-02 must be used.**

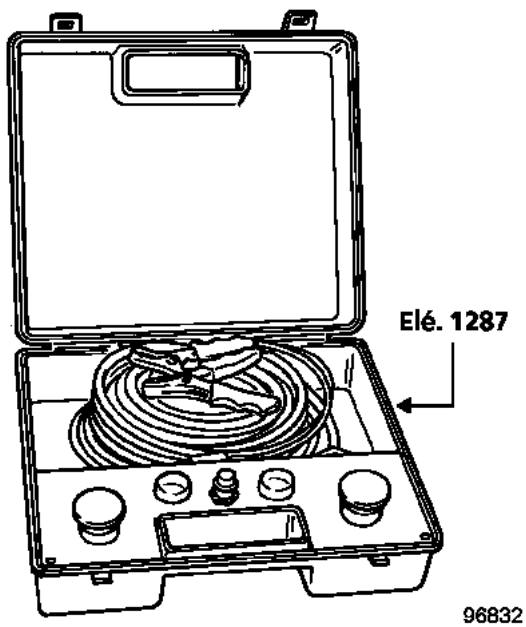

IMPORTANT: Do not reuse the pyrotechnic components as replacement parts. The pretensioners or airbags on a vehicle which is to be scrapped must be destroyed.

REMINDER: Each part is intended for a specific type of vehicle and should not be fitted onto another vehicle under any circumstances.
The parts are not interchangeable.

WARNING: Do not trigger pretensioners which are to be returned under warranty because of a problem with the seat belt catch. This makes it impossible for the supplier to analyse the part.
Return the part in the packaging of the new part.

PRETENSIONERS AND PYROTECHNIC RETRACTORS

Destruction of part fitted to the vehicle:

Move the vehicle outside the workshop.

Connect the destruction tool **Elé. 1287** to the pretensioner after removing the seat runner cover.

Unwind all the tool wiring so that it is far enough away from the vehicle (approx. 10 metres) during triggering.

Connect the two supply wires on the tool to a battery.

After checking that there is no-one nearby, destroy the pretensioner by pressing the two buttons on the tool at the same time.

Destruction of part removed from the vehicle:

Proceed in the same way as for the front airbag, in a stack of old tyres.

GETtheMANUALS.org

FRONT AIRBAGS or CHEST AIRBAGS (front or rear)

These parts can only be destroyed outside the workshop, once they have been removed from the vehicle.

Connect the corresponding wiring **Elé. 1287**.

Fit the airbag on the two wooden shims.

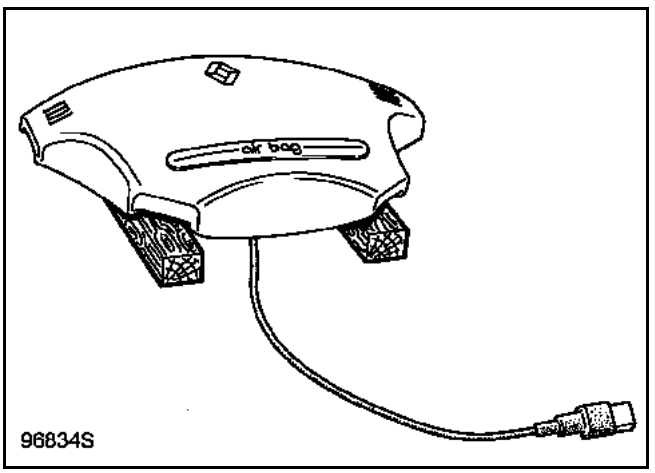

Destruction is carried out in a stack of old tyres.

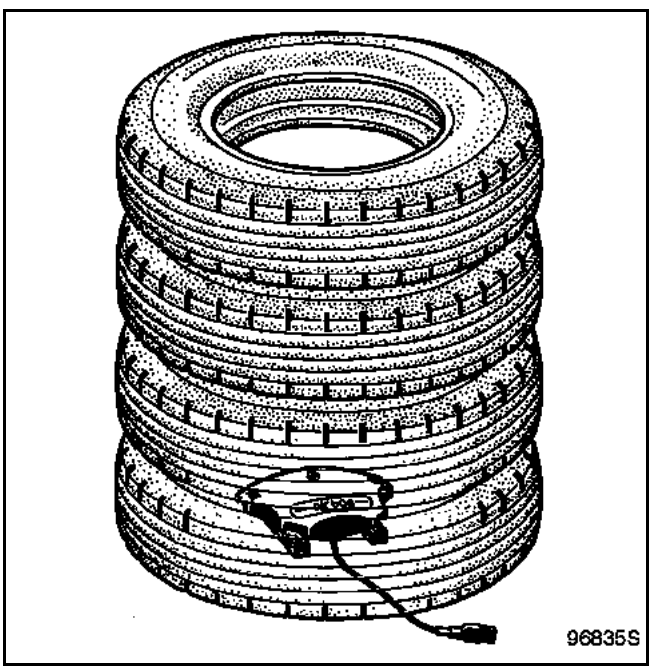

Make sure that deployment of the inflatable cushion will not be hindered.

Unwind all the tool wiring so that it is far enough away from the unit (approx. 10 metres) during triggering and connect it to the airbag.

Reconnect the two destruction tool supply wires **Elé. 1287** to a battery.

After checking that there is no-one nearby, destroy the airbag by pressing the two buttons on the tool at the same time.

NOTE: if triggering is impossible (faulty ignition module), return the part in the packaging of the replacement part to the warranty department.

SIDE CURTAIN AIRBAGS

These parts can only be destroyed outside the workshop, once they have been removed from the vehicle.

Proceed in the same way as for the front airbag, in a stack of old tyres.

GETtheMANUALS.org

GENERAL INFORMATION

This system consists of a driver's seat and door mirrors with storable positions. The seat is controlled electrically without adjustment memory.

The driver has two options:
- at the request, position the driver's seat and the door mirrors. This is called **manual** mode,
- to set or recall the position of the driver's seat and door mirrors in one operation. This is called **automatic** mode.

Three computers constantly control the position of the adjustable components, analyse the requests of the driver and operate the motors of:
– the driver's seat (computer located underneath the driver's seat),
– the door mirrors (computer integrated into the motor of each multiplex one touch electric window).

The seat comprises five electric motors. Only four of these motors are supplied during memory recall:
– rear height adjustment,
– longitudinal adjustment,
– seatback incline,
– upper seatback incline.

This system does not support fault finding with diagnostic tools.

REMINDER:
To store the driving position, it is necessary to adjust + workbench accessories, the four seat shafts and the two door mirror shafts with the manual keyboard. Then press the memo button (press and hold) to store the positions. These will be stored by the RENAULT Card present in the reader. Storage is confirmed by a beep from the instrument panel.

NOTE: the test keypad does not include a stop/start button.

GETtheMANUALS.org

THE UCH

Each time the remote controlled keyless entry system tries to open the door and each time the + accessories is activated, the UCH checks the RENAULT Card number.

When the driver's door is opened, the UCH transmits this number through a wire connection to the seat computer in order to identify the adjustment positions to restore.

Check the configurations. Refer to **Section 87B**.

SEAT COMPUTER

It is located under the driver's seat (clipped to the chassis).

Depending on the way in which it is controlled, this computer may be:
– on standby (inactive),
– in active mode (active).

It changes from standby to active mode when it detects the following information:
– + accessories switched on
– driver's door open signal,
– receipt of a RENAULT Card remote control signal.

It switches to standby mode around **40 minutes** after the ignition has been switched off, if the driver's door is not opened. If the driver's door is opened, it immediately changes to standby mode.

Removal of the computer does not require removal of the seat.

DOOR MODULES

These are integrated into the electric window motors and allow information on the door mirror positions to be stored. The two electric window motors must be fitted with computers for the driving position storage function.

NOTE: a dedicated multiplex network for driver's seat position memory allows information to be exchanged between the two front door modules.

GETtheMANUALS.org

THE SEAT

It comprises five motors:
– longitudinal (runners),
– height of rear of seat,
– seatback incline,
– upper seatback incline,
– height of front of seat.

REMINDER: The height adjustment of the front of the seat is not stored.

Each motor has a flexible harness and a reducing gear for transmitting the movement. The motors include position sensors.

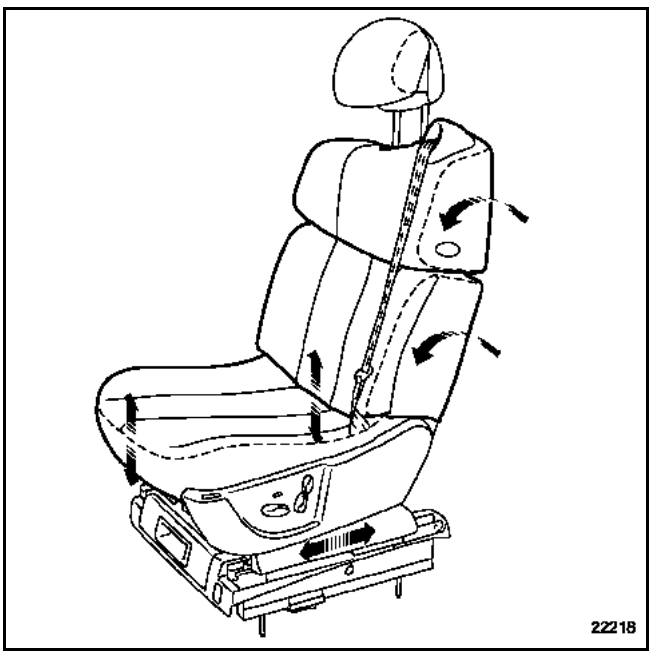

To remove the motors, refer to the **Bodywork** section.

CONTROL KEYPAD

It is located on the external side of the driver's seat.

It comprises:
- a **seat squab** switch (A), allowing longitudinal movements and adjustment of the height of the front and rear of the seat,
- a **seatback switch** (B) allowing tilting (reclining) of the seatback,
- an **upper seatback** switch (C),
- a **memo** button (D), allowing the driving position adjustments (driver's seat and door mirrors) to be stored or recalled.

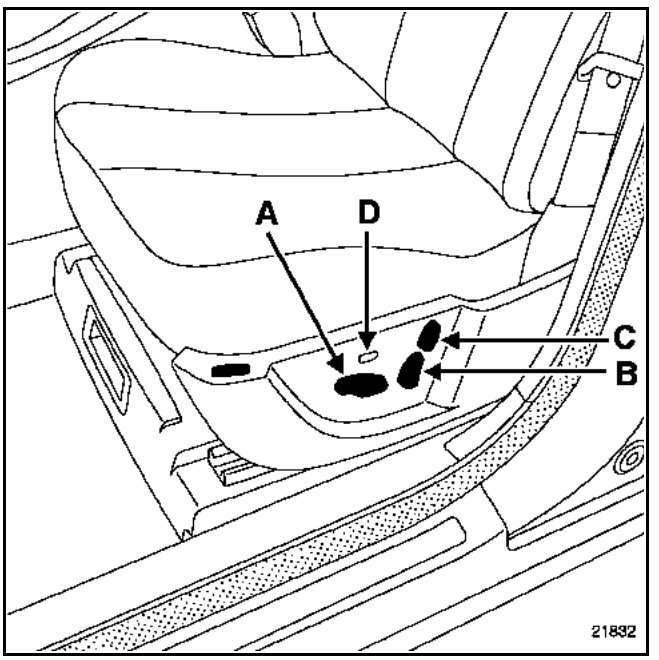

This button is used:
– by pressing and holding **(2 seconds) to store the driving position**. A beep confirms that the position has been stored,
– by a one touch press to recall the driving position.

NOTE: pressing a button during recall of the driving position halts movement of the seat and door mirrors.

NOTES:
– It is impossible to recall the positions when the vehicle is moving.
– If the stored positions are recalled when the door mirrors are folded down, the motors will move after they have been put back in place.

GETtheMANUALS.org

REMOVAL

Remove:
– the control buttons,
– the mounting screws (1).

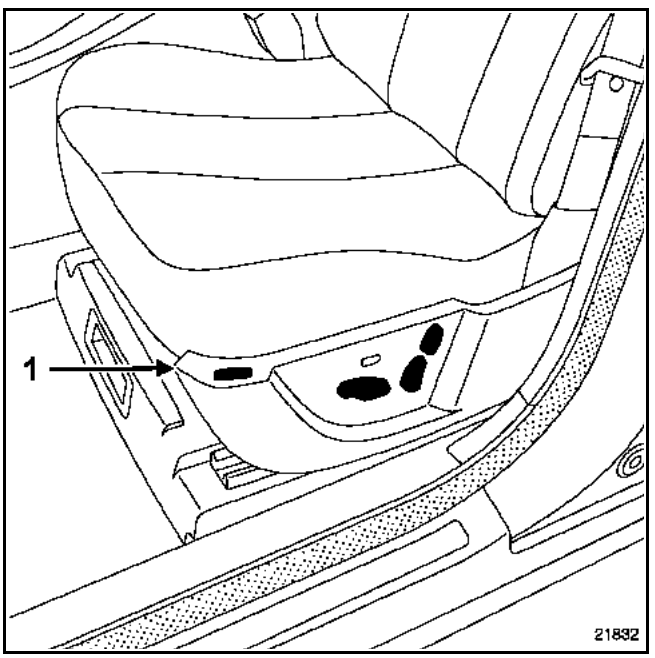

Gently pull away the trim in order to unclip the control keypad.

CHECKING THE MEMORY KEYPAD
(using a multimeter)

IMPORTANT: it is essential to disconnect the keypad before checking it.

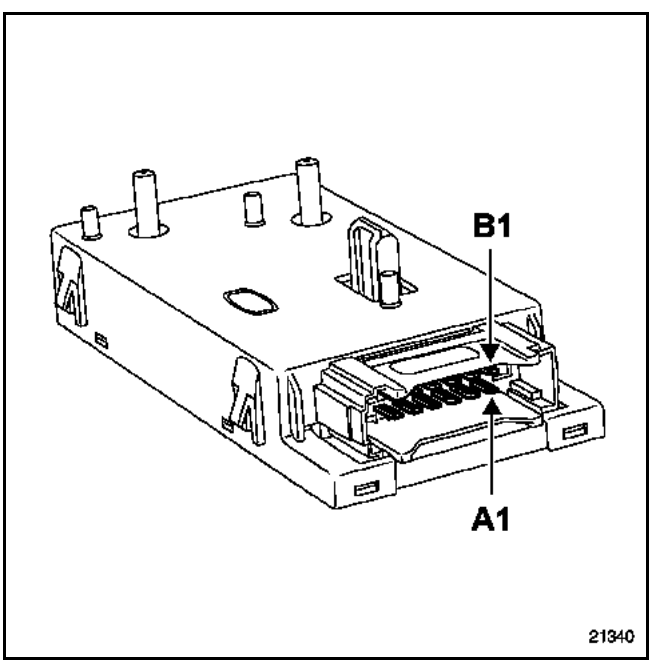

Storable section

Functions		Track
Seat squab	Backwards	A1/A3
	Forwards	A1/A5
Seat squab height	Step-down	A2/A3
	Step-up	A2/A5
Seatback incline	Front	A5/A6
	Rear	A3/A6
Upper seatback incline	Front	A5/A4
	Rear	A3/A4
Driver's seat position memory		A2/A7
Storage beep		A8/A9

Non-storable section (front seat squab height)

Functions		Track	
		B1	B6
Front seat squab height	Step-down	B3	B5
	Step-up	B5	B3

NOTE: the fuses protecting the electrical circuit of the seats (driver and passenger) are located on the option relay/fuse box. It is necessary to remove the glovebox to access these fuses.

GETtheMANUALS.org

THE COMPUTER

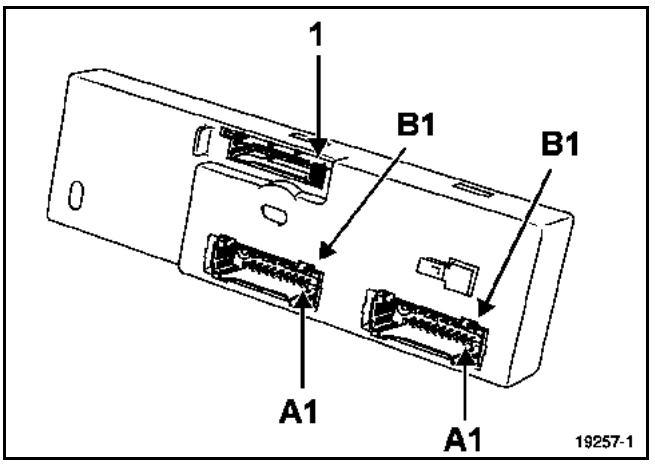

CONNECTION

Black connector

Track	Description
A1	+ After ignition
A5	UCH connection
A8	UCH connection
B1	Supply
B3	Earth
B4	Earth
B6	Supply

White connector

Track	Description
A3	A9 control connection (storage)
B1	Runner motor
B2	Upper seatback motor
B3	Seatback motor
B4	Rear height motor
B5	Motor common

Green connector

Track	Description
1	Sensor earth
2	Runner sensor signal
3	Seatback sensor signal
4	Upper seatback sensor signal
5	Rear height sensor signal
6	Sensor feed
7	Not used
8	A3 control connection
9	A5 control connection
10	A7 control connection
11	Not used
12	A2 control connection
13	A4 control connection
14	A1 control connection
15	A6 control connection

GETtheMANUALS.org

DOOR MODULES

NOTE: Refer to the **Electric window** section for information on removing electric window motors and their features.

Track	Description
1	Door mirror left/right-hand motor control
2	Door mirror motors common
3	Lower passenger window (switch)
4	Door mirror control connection (driver's side track 7)
5	Door mirror control connection (driver's side track 3)
6	Door mirror control connection (driver's side track 9)
7	Potentiometer signal from left/right-hand driver's mirror motor
8	Raise passenger window (switch)
9	Not used
10	+ battery
11	Door mirror upper/lower motor control
12	Door mirror folding control
13	Door mirror control connection (driver's side track 6)
14	Lower driver's window (driver's side switch)
15	Not used
16	Door mirror potentiometers common
17	Earth
18	Not used
19	Multiplex connection between the door mirrors (specific to the driving position memory function)
20	Earth
21	Door mirror potentiometer common
22	Door mirror control connection (driver's side track 8)
23	Raise driver's window (driver's side switch)
24	Door mirror control connection (driver's side track 5)
25	Door mirror control connection (driver's side track 1)
26	Door mirror upper/lower potentiometer signal
27	UCH connection (close signal or storable seat position)
28	Not used
29	Multiplex connection between the door mirrors
30	Not used

GETtheMANUALS.org

DOOR MIRRORS

REMINDER: it is not necessary to remove the interior door trim to remove the door mirrors.

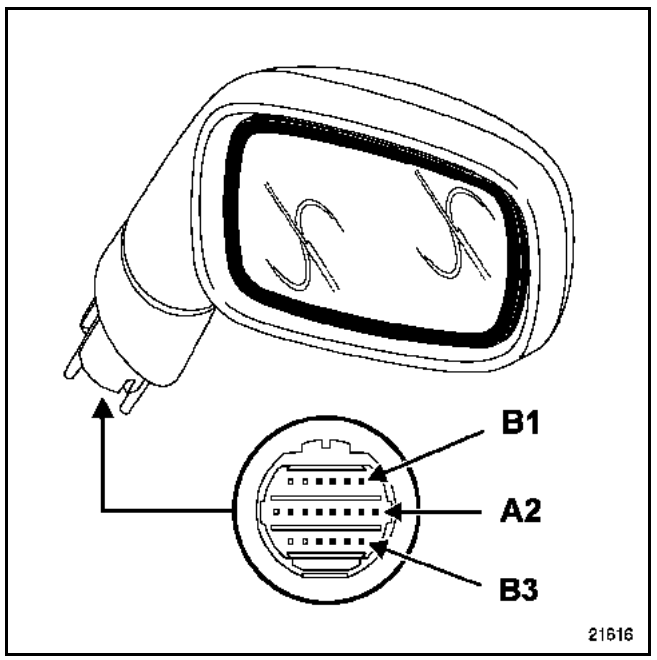

For the door mirror control, refer to **Section 84A**.

CONNECTION (fullest version)

Track	Description
1B	Door mirror demisting
1C	Door mirror demisting
1D	Temperature sensor (right-hand side)
1E	Temperature sensor (left-hand side)
1F	Not used
1G	Not used
2A	Horizontal adjustment motor
2B	Vertical adjustment motor
2C	Motor common
2D	Horizontal position potentiometer
2E	Vertical position potentiometer
2F	Supply
2G	Earth
2H	Not used
3B	Tilt motor
3C	Tilt motor
3D	Brightness information (interior rear-view mirror)
3E	Brightness information (interior rear-view mirror)
3F	Not used
3G	Not used

GETtheMANUALS.org

MANUAL SEAT ADJUSTMENT CONTROL

All manually adjustable seats are fitted with an electrically adjustable upper seatback.

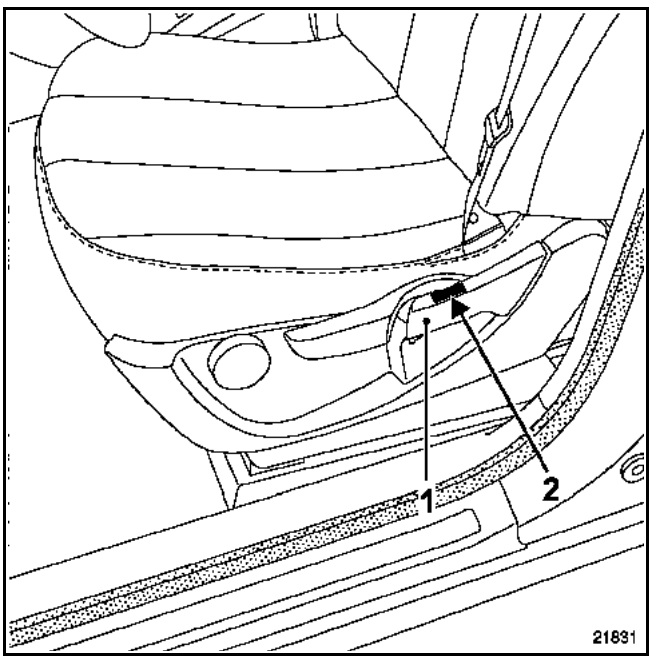

Track	Description
1	Earth
2	+ accessories
3	Engine supply
4	Engine supply

NOTE: the handle (1) and the switch (2) only form a single part, the connector is located under the seat.

Position	1 and 3	2 and 4	1 and 4	2 and 3
Pause	0 Ω	/	0 Ω	/
Front	/	/	0 Ω	0 Ω
Rear	0 Ω	0 Ω	/	/

CHECKING THE ELECTRIC SEAT KEYPAD (using a multimeter)

IMPORTANT: it is essential to disconnect the keypad before checking it.

Functions		Track	
		B4	A5
Seat squab	Backwards	A6	B2
	Forwards	B2	A6
Seat squab height	Step-down	B6	A1
	Step-up	A1	B6
Seatback incline	Front	B5	A2
	Rear	A2	B5
Upper seatback incline	Front	A4	A3
	Rear	A3	A4
Front height*	Step-down	B1	B3
	Step-up	B3	B1

* Depending on the version.

GETtheMANUALS.org

VEL SATIS

0 General Information

01C SPECIFICATIONS

02B INNOVATIONS

03B COLLISION

05B EQUIPMENT AND TOOLING

BJ0E - BJ0J - BJ0K - BJ0M - BJ0P - BJ0V

77 11 311 122 **Edition 2 - MAY 2002** **EDITION ANGLAISE**

"The repair methods given by the manufacturer in this document are based on the technical specifications current when it was prepared.

The methods may be modified as a result of changes introduced by the manufacturer in the production of the various component units and accessories from which his vehicles are constructed.

All copyrights reserved by RENAULT.

Copying or translating, in part or in full, of this document or use of the service part reference numbering system is forbidden without the prior written authority of RENAULT.

© RENAULT 2001

GETtheMANUALS.org

General Information

Contents

Page

01C SPECIFICATIONS

Dimensions	01C-1
Engine and equipment	01C-2
Identification	01C-3
Lifting equipment	01C-6
Towing	01C-9
Sub-frame dimensions	01C-10
Description of parts	01C-12

02B INNOVATIONS

Structure	02B-1
Passenger safety	02B-3
Passenger comfort	02B-14
Acoustics	02B-15
Parking brake	02B-17
Adaptive cruise control	02B-18
Repair methods	02B-20

03B IMPACTS

Fault finding	03B-1
Part combinations for impacts	03B-4
Repairs in body jig bench	03B-10

05B EQUIPMENT AND TOOLS

Repair bench	05B-1
Special tooling required	05B-4

GETtheMANUALS.org

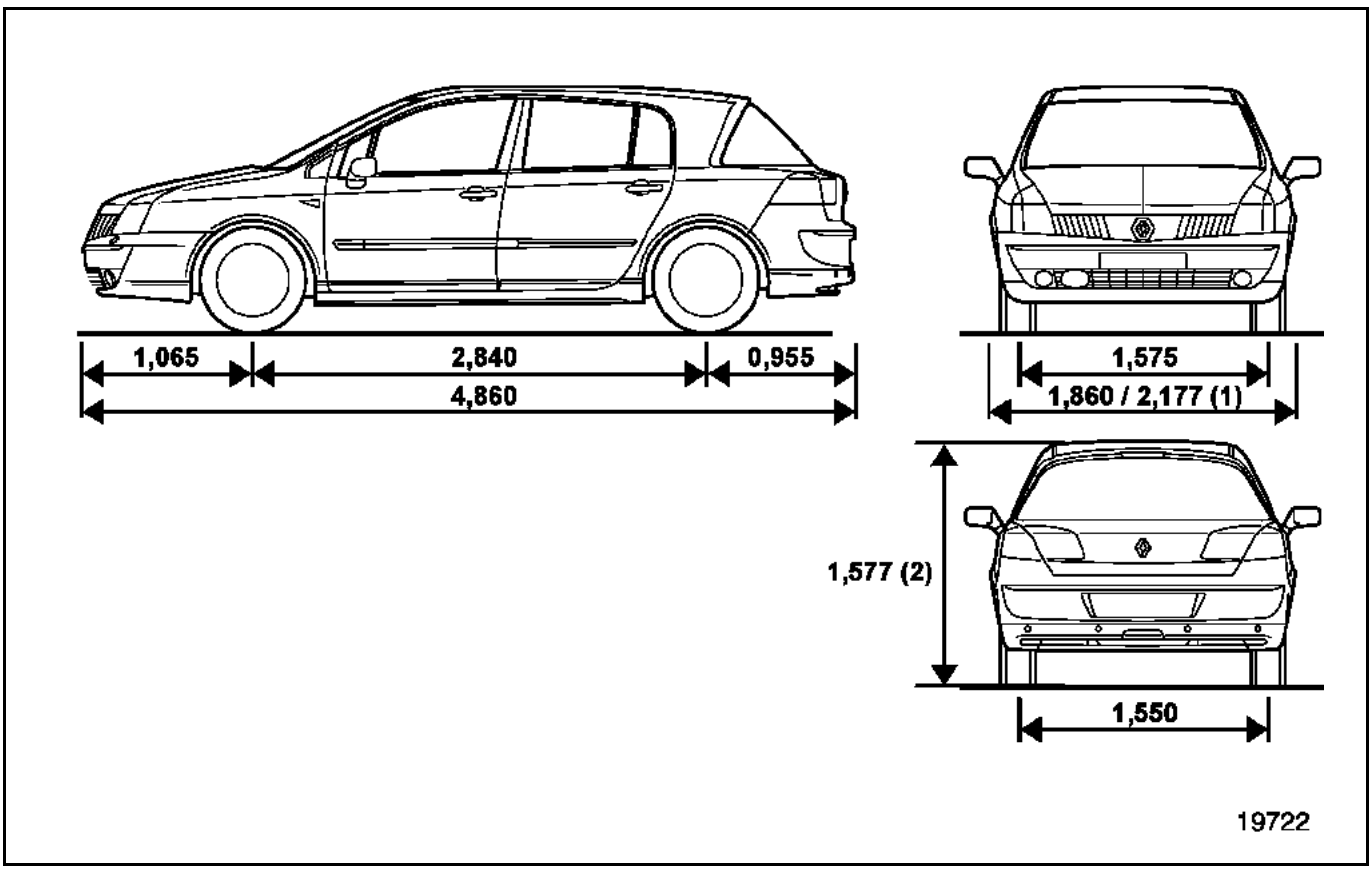

Dimensions in metres

(1) Between door mirrors

(2) Unladen

GETtheMANUALS.org

Vehicle type	Engine		Gearbox type
	Type	Cubic capacity (cc)	
BJ0K	F4R	1998	PK6
BJ0E - BJ0F - BJ0G - BJ0M	G9T	2188	PK6 / SU1
BJ0J	P9X	2958	SU1
BJ0V	V4Y	3498	SU1

VEHICLE IDENTIFICATION

Example: BJ0K

B : Body type (five-door)

J : Project code

0K : Engine suffix

GETtheMANUALS.org

LOCATION OF VEHICLE IDENTIFICATION PLATE

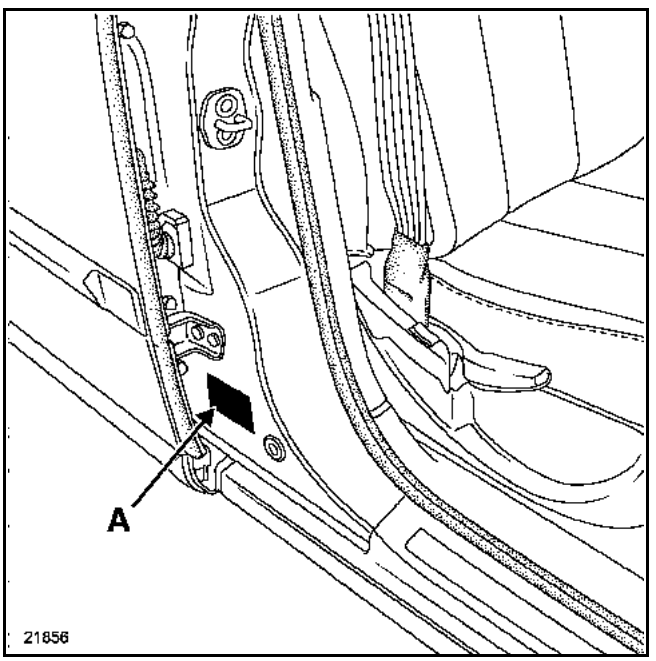

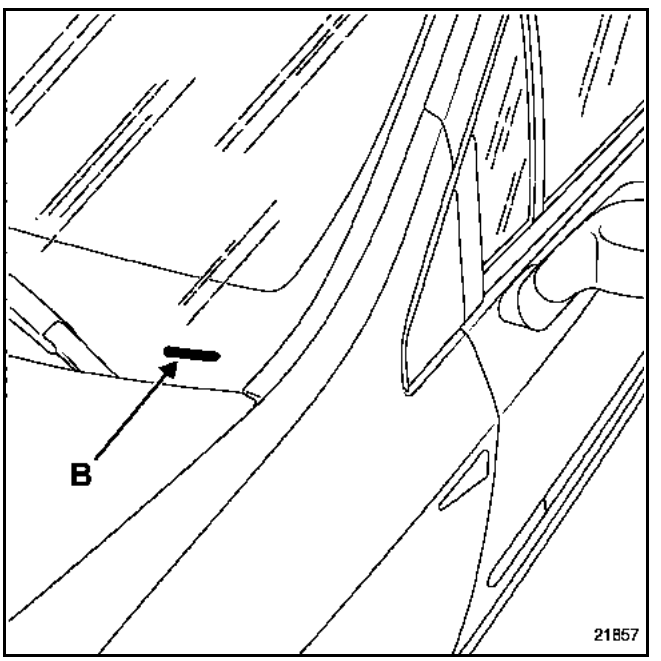

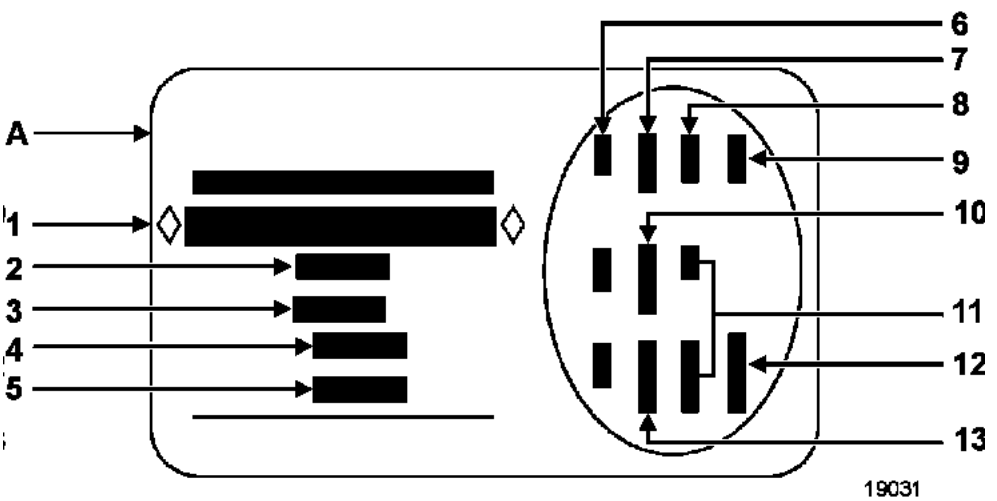

1 Vehicle type and chassis number **This information is repeated on identification mark (B)**
2 MGVW (Maximum Gross Vehicle Weight)
3 GTW (Gross Train Weight - loaded vehicle with trailer)
4 Front axle MGVW
5 Rear axle MGVW
6 Technical specifications of the vehicle
7 Vehicle paint reference
8 Equipment level
9 Vehicle type
10 Trim code
11 Additional equipment details
12 Fabrication number
13 Interior trim code

GETtheMANUALS.org

COLD-MARKING OF THE BODY

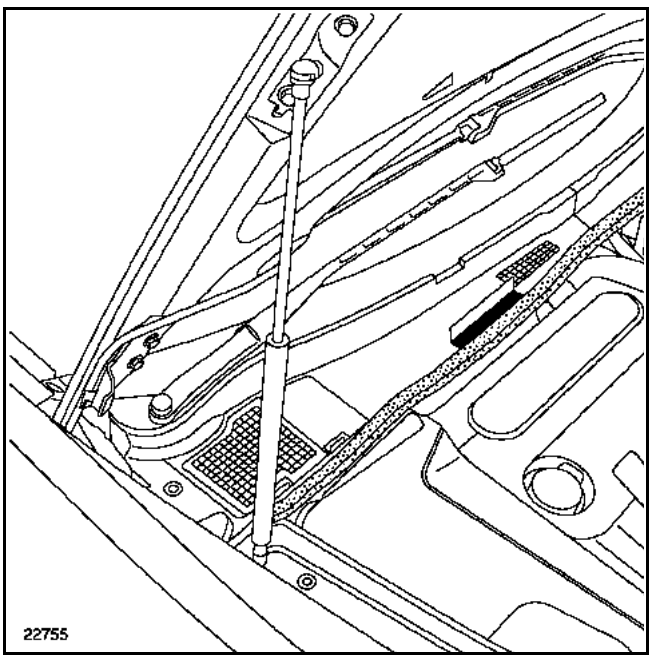

If replacing the complete body, the marking must be carried out in compliance with the current regulations.

GETtheMANUALS.org

VEHICLE IDENTIFICATION NUMBER

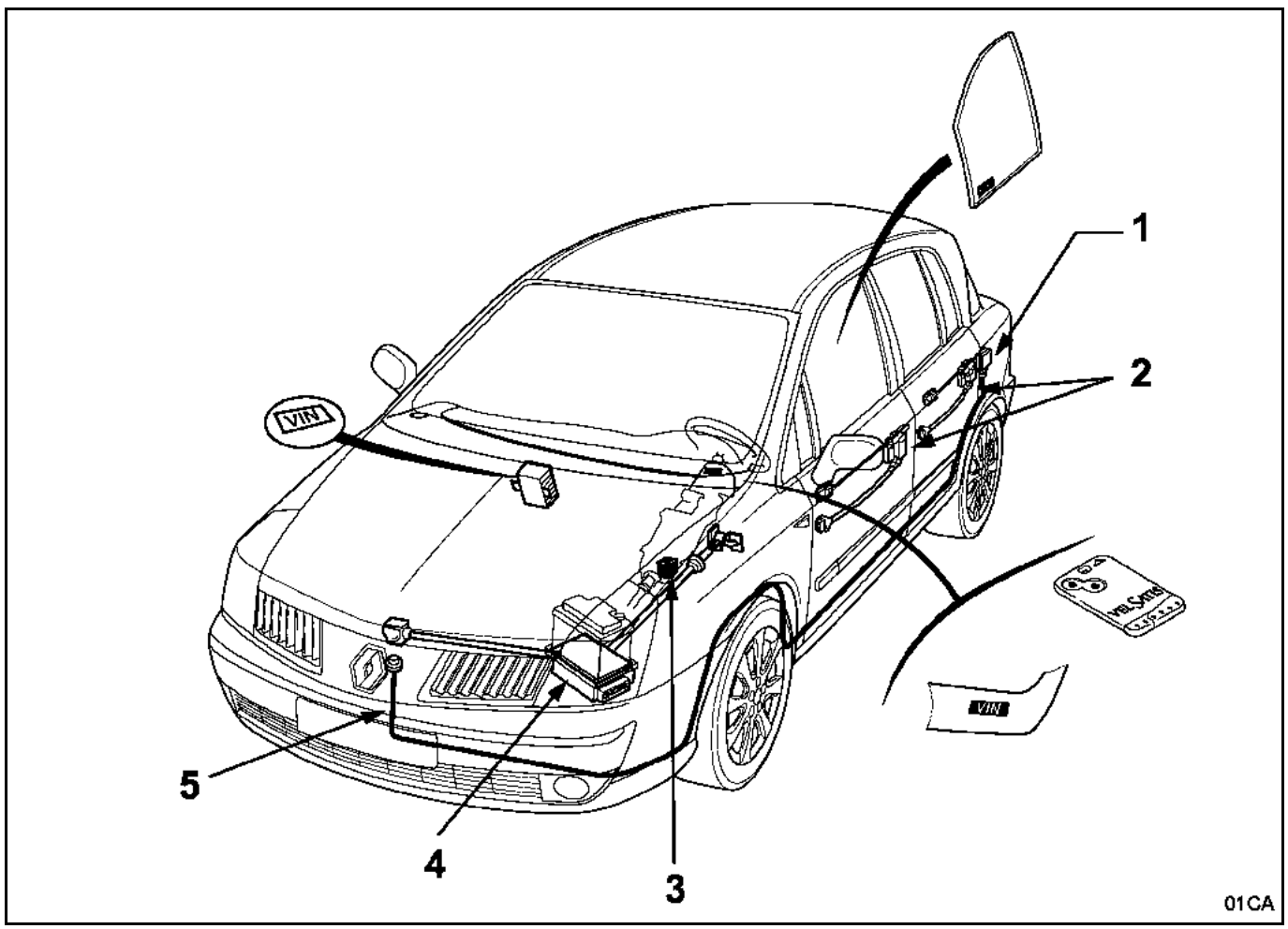

1 Fitted alarm
2 Lock and handle security
3 Steering column protection
4 Computer protection
5 Alarm wiring protection

GETtheMANUALS.org

Safety symbol (special precautions to be taken when carrying out operations).

SPECIAL TOOLING REQUIRED	
Cha. 280 -02	**Adaptor cup for trolley jack**

If a trolley jack is used, appropriate axle stands must always be used.

IMPORTANT:
The sub-frame of this vehicle is protected by products with a 12 year anti-corrosion warranty.

Never use equipment which is not fitted with rubber pads, in order to avoid the direct contact of metal with metal which would damage the protection originally fitted.

The vehicle **must not** be raised by placing the jack beneath the front suspension arm or under the rear axle.

– To raise a front or rear wheel, place the jack on (B) on the sub-frame body flange in alignment with marks (A).
– To raise the front and rear laterally, use cross piece **cha 280-02**.

Place the jack under the sill body flange in the centre of the front door.

IMPORTANT:
Position the flange correctly in the groove of the cup.

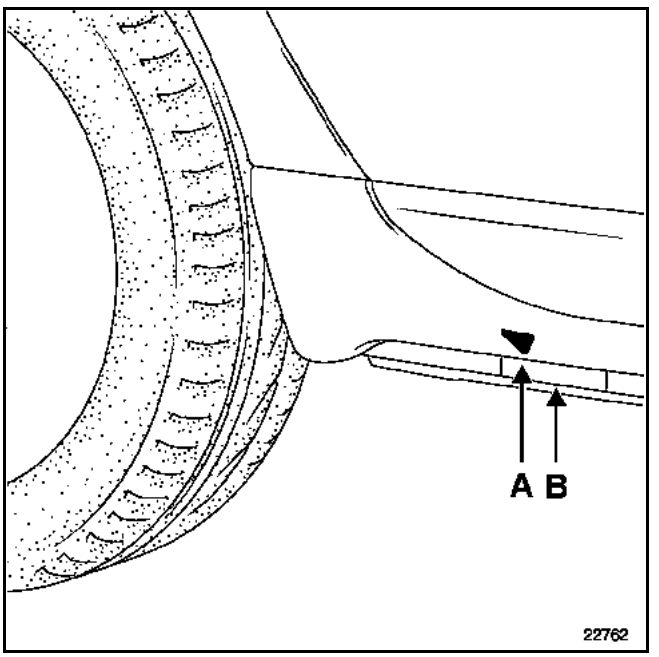

To mount the vehicle on axle stands, the entire vehicle must be lifted laterally and axle stands must be placed under the reinforced body flanges used for jacking points at (B).

GETtheMANUALS.org

SAFETY ADVICE REMINDER

As far as possible, when heavy components must be removed from the vehicle, it is preferable to use a four-post lift. When this type of component has been removed (eg.: engine and transmission assembly, rear axle, fuel tank etc.) the vehicle will be relieved of a large part of its load and there is a risk of it tipping if secured in a two-post lift (see the positioning of the arms in the following diagram).
This is even more dangerous when the vehicle is raised high.

When the vehicle is raised from underneath on a two-post lift, securing straps available from Parts Stores Part No.: **77 11 172 554** must be fitted.

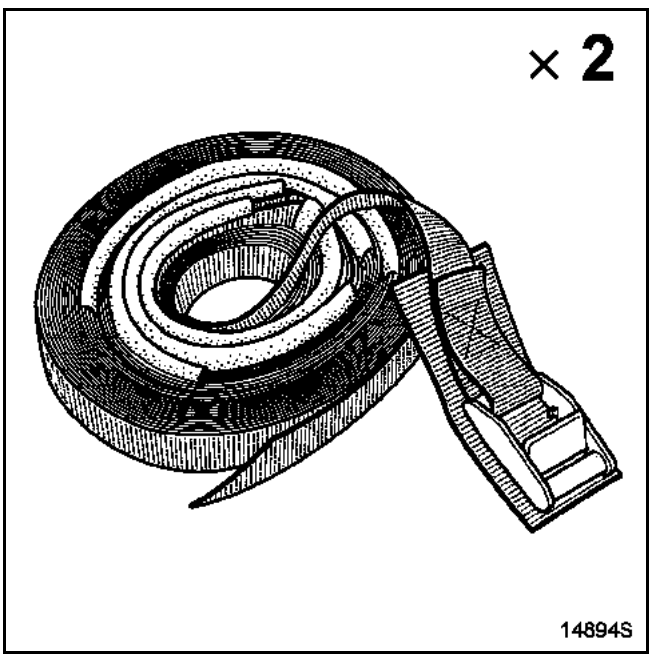

FITTING STRAPS

For obvious safety reasons, these straps must be in perfect condition (replace them as soon as they begin to shred).

When fitting them, check that the seats and breakable parts of the vehicle are protected. Do not overtighten the straps.

Thread the straps under the lift arms and loop them through the vehicle.

The following example shows a vehicle secured at the front.

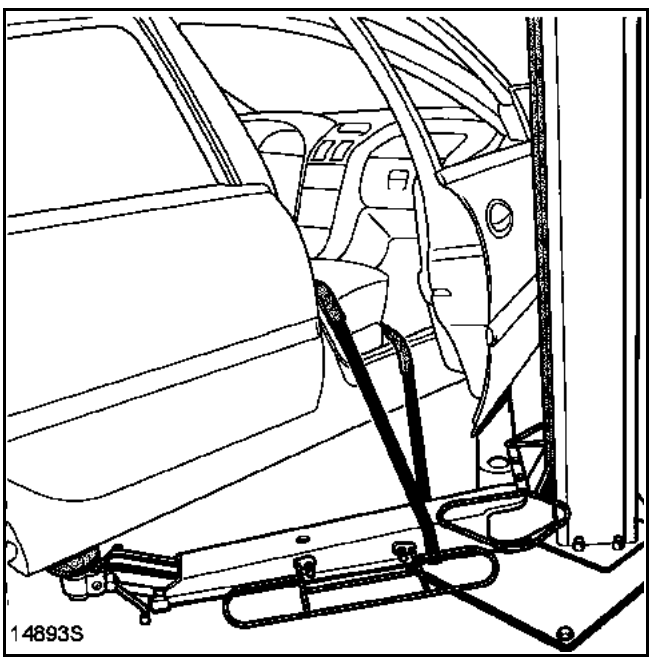

GETtheMANUALS.org

POSITIONING THE LIFTING ARMS

Position the lifting arm on the sub-frame body flange in alignment with marks (A).

FRONT

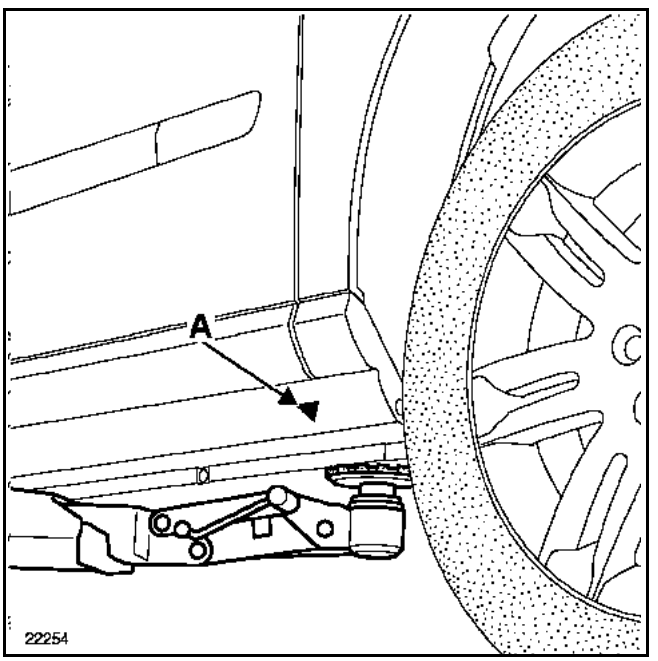

REAR

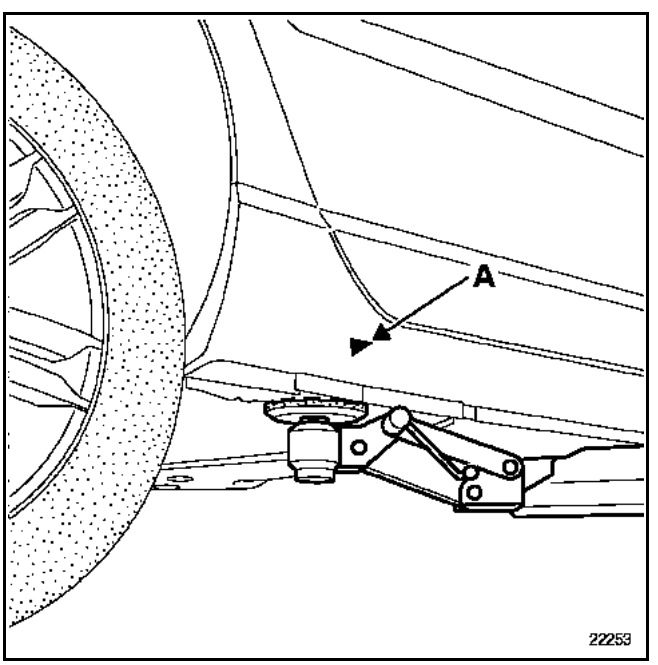

GETtheMANUALS.org

OBSERVE THE TOWING GUIDELINES OF THE COUNTRY YOU ARE IN.

NEVER USE THE DRIVESHAFTS AS ATTACHMENT POINTS.

The towing points may only be used for towing the vehicle on the road. They should never be used for removing the vehicle from a ditch or for any other similar breakdown operation or to lift the vehicle, either directly or indirectly.

FRONT

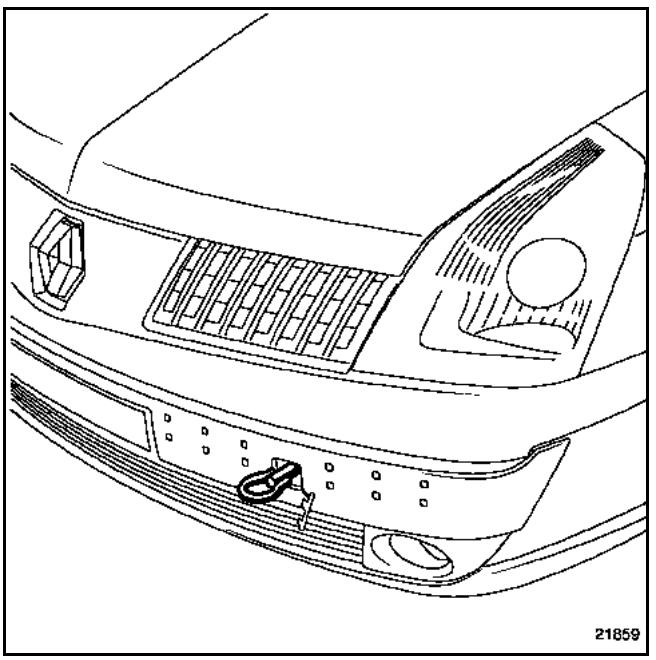

REAR

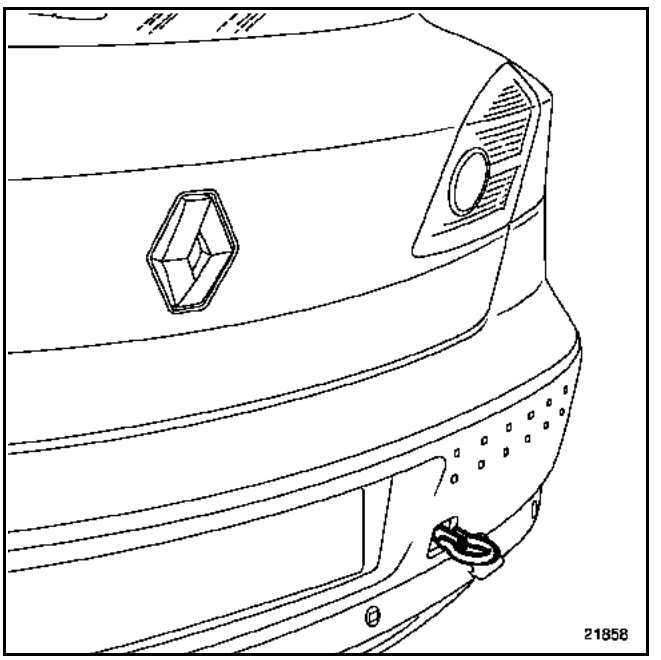

GETtheMANUALS.org

	DESCRIPTION	DIMEN-SION X (mm)	DIMEN-SION Y (mm)	DIMEN-SION Z (mm)	DIAMETER (mm)	ANGLE
A	Front sub-frame rear mounting G	**384.5**	**337**	**61**	**∅29.5; M12**	**0**
B1	Rear axle leader pin	**2268.5**	**647**	**60**	**∅30**	**0**
B2	Rear axle front mounting G	2431.5	555	60	∅14.5; M10	0
C	Front sub-frame front attachment (hole)	92.5	426	243	∅18.5	7°
C1	Front sub-frame front attachment (lug)	65.5	417	247	∅8	7°
C2	Front sub-frame front attachment (lug)	117	410.5	247	∅8	7°
D1	Rear axle sub-frame guide	2791.5	478	244	∅16.8	0
D2	Rear axle sub-frame guide	3066.5	478	235.3	∅10.2	0
E	Rear shock absorber upper mounting	2675.3	566.4	446.6	∅14.5; M12	4°
F	Front shock absorber upper mounting	51.5	615	691.5	∅48.7	-
F1	Front shock absorber upper stop	51.5	550	707	-	-
F2	Front shock absorber upper stop	7	660	713.5	-	-
F3	Front shock absorber upper stop	116	643.5	703	-	-
G	Front side member rear leader pin	1650	443.5	- 22	∅20	0
H	Front side member front leader pin	- 620	498	260	20×20	0
J	Rear side member rear leader pin	3298	478	224	20×20	0
K	Front panel attachment leader pin	- 640	564	260	∅14.5; M10	0
K1	Front end cross member (front panel mounting)	- 614	430	432	M8	90°
K2	Front end cross member (front panel mounting)	- 581	430	432	M8	90°
L	Rear end cross member (end panel)	3498.7	417	205	10.2	5th
M	Leader pin under centre floor	640	443.5	-23.5	16.2×20.2	0
P1	Engine mounting	-271	535	524	M8	0
P2	Engine mounting	-141	513	524	M8	0
Q1	Gearbox mounting	-244,5	410.5	415	∅14.5; M12	0
Q2	Gearbox mounting	-111.5	399.5	415	∅14.5; M12	0
R	Additional engine mounting (tie-rod)	35	453	583	∅14.5; M12	0

A and B = vehicle trim-setting reference

GETtheMANUALS.org

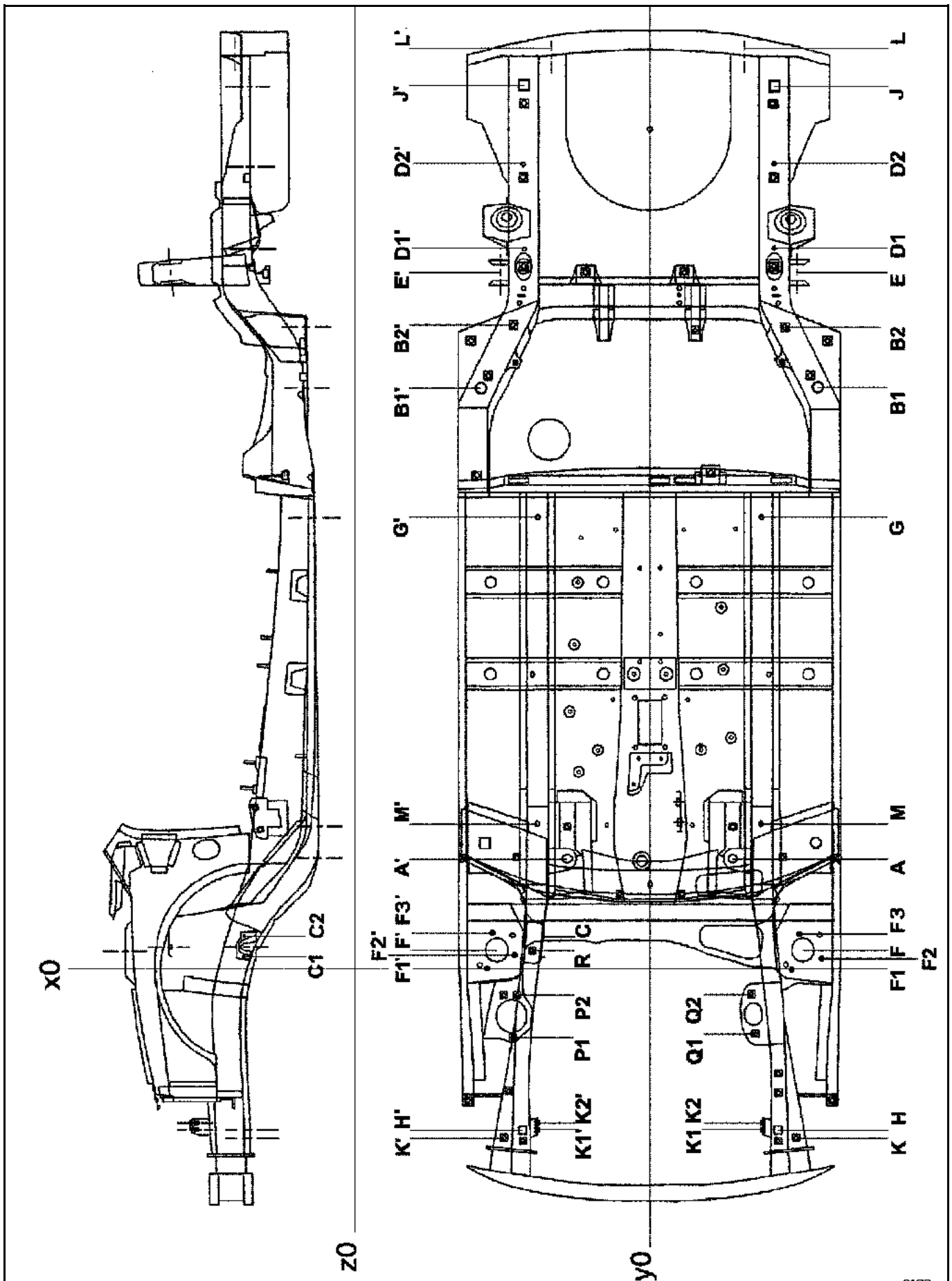

GETtheMANUALS.org

LOWER STRUCTURE

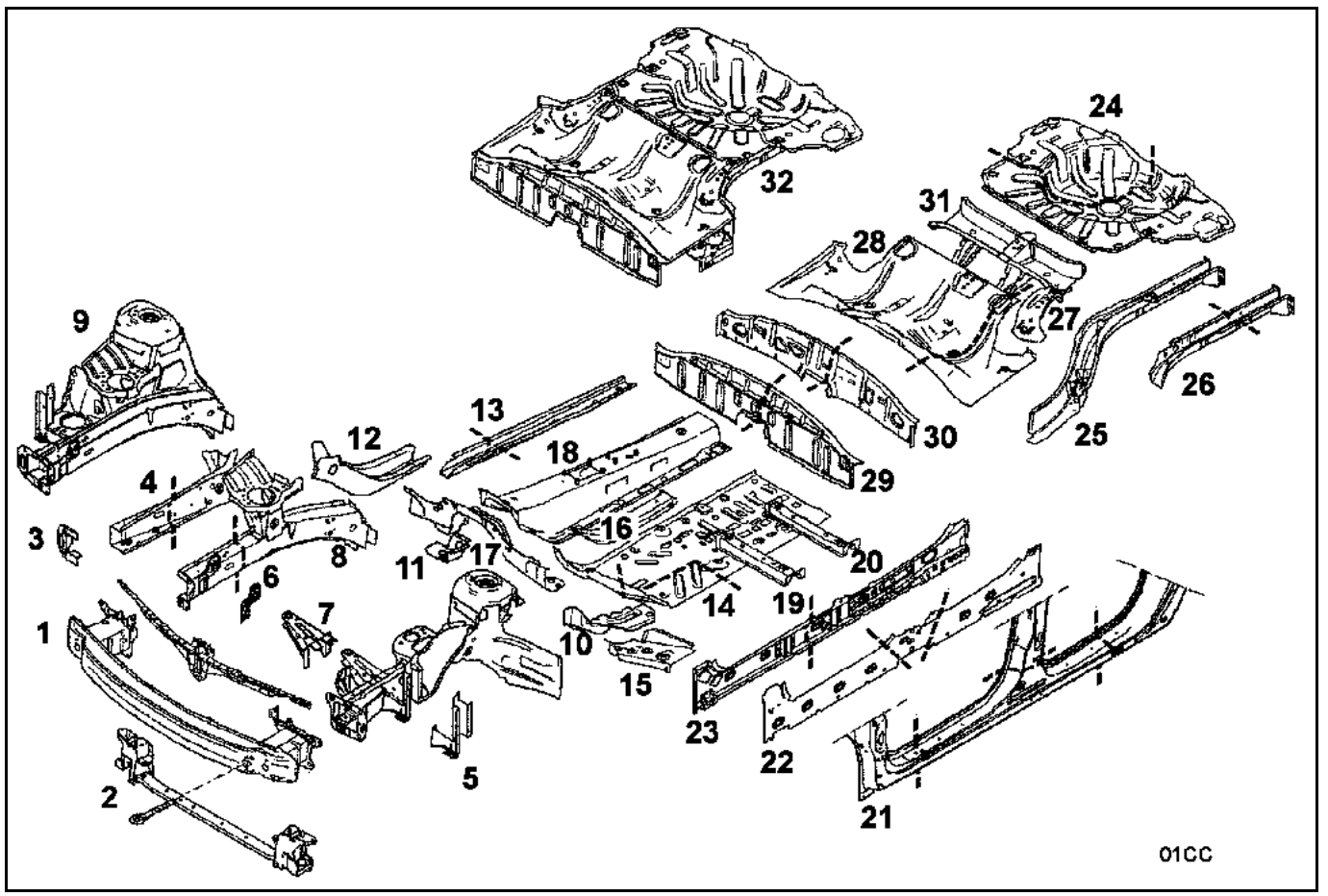

1 Front end lower cross member
2 Radiator mounting cross member
3 Front end cross member mounting stiffener
4 Front section of front side member closure panel
5 Front end side cross member
6 Front panel mounting bracket
7 Battery tray bracket
8 Front side member
9 Front half unit
10 Front sub-frame rear mounting unit
11 Sub-frame rear mounting unit reinforcement
12 Front side member, central section
13 Front side member rear section
14 Central floor, side section
15 Central floor front side cross member
16 Central floor stiffener
17 Centre floor front cross member
18 Tunnel
19 Front cross member under front seat
20 Rear cross member under front seat
21 Sill panel
22 Sill panel reinforcement
23 Inner sill panel
24 Rear floor rear section
25 Rear side member
26 Rear side member rear section
27 Front section of rear side member closure panel
28 Rear floor, front section
29 Rear floor front cross member
30 Rear floor front cross member closure panel
31 Centre cross member of rear floor
32 Rear floor unit

GETtheMANUALS.org

UPPER STRUCTURE

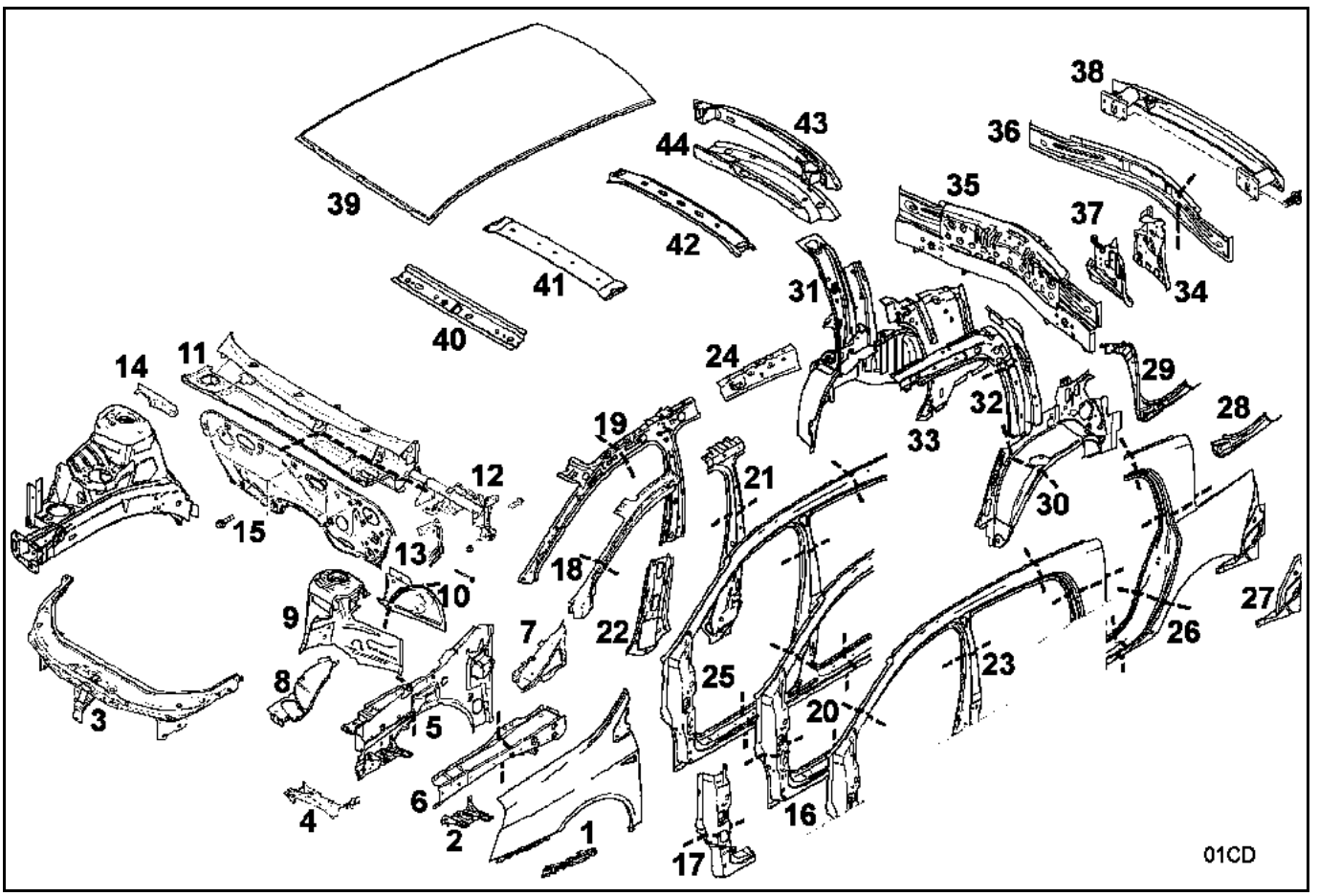

1 Front wing
2 Front wing lower mounting bracket
3 Front upper cross member
4 Headlight holder plates
5 Scuttle side panel
6 Scuttle side panel upper reinforcement
7 Scuttle side panel upper rear reinforcement
8 Front wheel arch, front section
9 Front wheel arch
10 Front wheel arch, rear section
11 Plenum chamber
12 Steering column mounting
13 Steering column lower bracket
14 Side bulkhead
15 Pedal assembly support plate
16 A-pillar
17 A-pillar reinforcement
18 Windscreen aperture pillar lining reinforcement
19 Windscreen pillar lining
20 B-pillar
21 B-pillar reinforcement.
22 B-pillar lining
23 Body top
24 Roof panel lining
25 Body side front section
26 Rear wing panel
27 Rear wing panel extension
28 Rear wing panel lower rain channel
29 Rear wing panel upper rain channel
30 Outer rear wheel arch
31 Inner rear wheel arch
32 Quarter panel reinforcement
33 Quarter panel lining
34 Rear lights mounting
35 Rear end panel assembly
36 Rear end panel
37 Rear end panel side lining.
38 Rear bumper mounting cross member
39 Roof
40 Roof front cross member
41 Roof centre cross members
42 Roof panel arch
43 Roof rear cross member
44 Roof rear cross member lining

GETtheMANUALS.org

OPENING ELEMENTS STRUCTURE

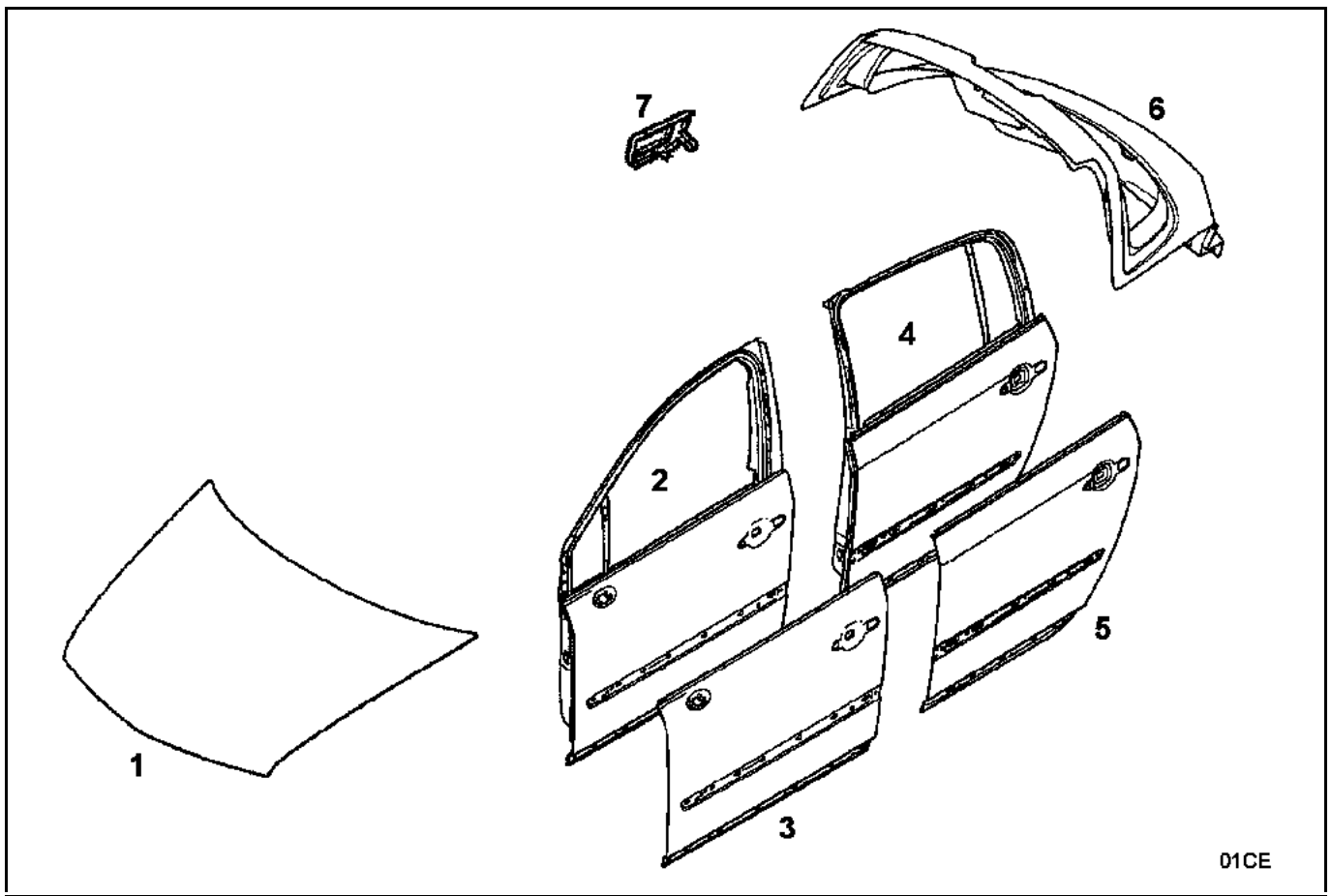

1 Bonnet
2 Front side door
3 Front side door panel
4 Rear side door
5 Rear side door panel
6 Tailgate
7 Fuel filler flap

GETtheMANUALS.org

The vehicle structure is made up partly of VHTS (very high tensile steel) panelling components (refer to the information on the description of parts).

FEATURES OF VERY HIGH TENSILE STEEL PANELS (VHTS)

As their name suggests, these panels are very strong and very flexible and require special pressing techniques. They cannot be straightened using traditional bodywork repair tools. (**REMINDER:** it is strongly recommended that this type of panel is not heated in order to straighten it as annealing may affect the properties of the metals).

This means that damaged parts must always be replaced, either completely or using partial cuts.

It is recommended that HSS type spot weld removal bits are used to remove original spot welds on this type of panel, otherwise use tungsten carbide mills or cutters.

This vehicle is also built from structural elements made by laser butt welding thick panels together which are often of different types, e.g. front side member:

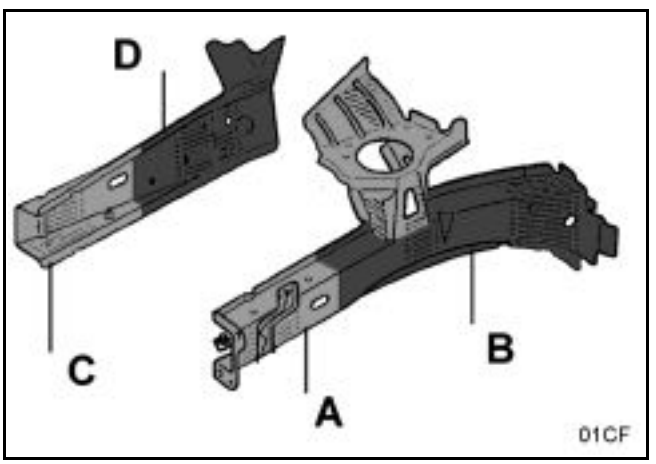

Section A: XE 280P HTS panel	**thickness 1.8 mm**
Section B: HE 450M VHTS panel	**thickness 1.8 mm**
Section C: XE 280P HTS panel	**thickness 1.5 mm**
Section D: HE 450M VHTS panel	**thickness 2.5 mm**

When two panel thicknesses are shown for the same part in the detailed procedure descriptions, this means that this part consists of two panels which were originally butt welded.
Thicknesses are shown starting from the outer end of the part going towards the inside of the vehicle (direction of the impact).

GETtheMANUALS.org

HTS AND VHTS PANELS

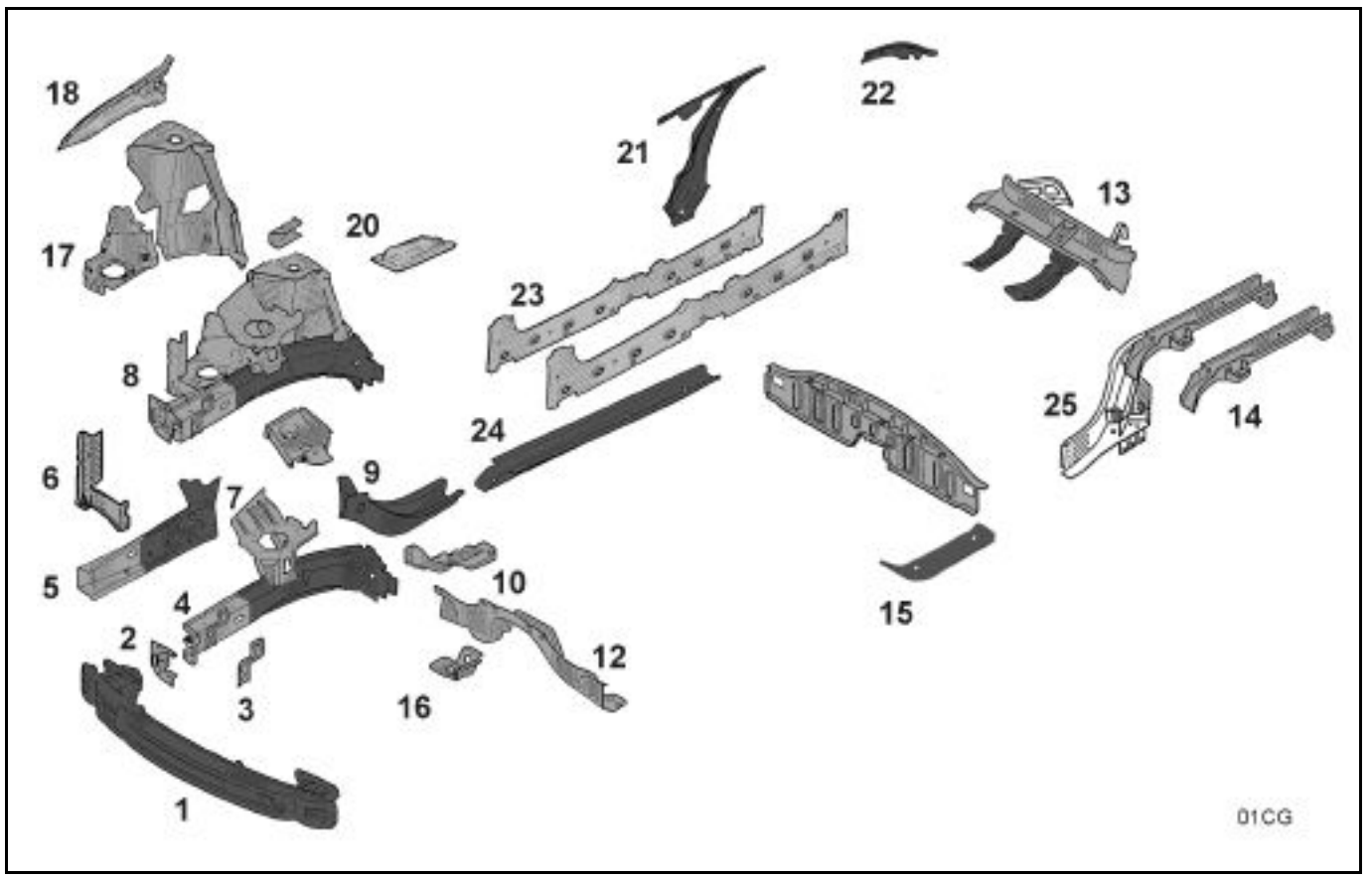

1 Front end cross member (**41 A**)
2 Front end cross member mounting reinforcement (**41 B**)
3 Front upper cross member mounting element (**41 F**)
4 Front side member (**41 E**)
5 Front side member closure panel (**41 C**)
6 Front end side cross member (**41 D**)
7 Front side cross member (**41 I**)
8 Front half unit (**41 H**)
9 Front side member, central section (**41 J**)
10 Sub-frame mounting unit (**41 M**)
11 Front side member, rear section (**41 K**)
12 Rear floor front cross member (**41 T**) rear (**41 U**)
13 Cross member under rear floor (**41 W**)
14 Rear side member (**41 Z**)
15 Centre floor reinforcement (**41 Q**)
16 Sub-frame mounting unit reinforcement (**41 N**)
17 Wheel arch, front section (**42 F**)
18 Scuttle side panel upper reinforcement (**42 D**)
19 Wheel arch (**42 G**)
20 Wheel arch upper reinforcement (**42 I**)
21 B-pillar lining (**43 E**)
22 Quarter panel upper reinforcement (**44 G**)
23 Sill panel reinforcement (**43 J**)
24 Inner sill panel (**43 K**)
25 Complete rear side member (**41 Y**)

GETtheMANUALS.org

LOWER STRUCTURE

The vehicle structure is made up partly of VHTS (very high tensile steel) panelling components (refer to the section on the description of parts).

FEATURES OF VERY HIGH TENSILE STEEL PANELS (VHTS)

As their name suggests, these panels are very strong and very flexible and require special pressing techniques. They cannot be straightened using traditional bodywork repair tools.

REMINDER:
It is strongly recommended that this type of panel is not heated in order to straighten it as annealing may affect the properties of the metals.
This means that damaged parts must always be replaced, either completely or using partial cuts.

It is recommended that HSS type spot weld removal bits are used to remove original spot welds on this type of panel, otherwise use tungsten carbide mills or cutters.

Regarding their weldability: for MAG arc welding there are no special instructions: for electric-resistance spot welding, the adjustment parameters (current and pressure) are as stated on the so-called HTS (high tensile strength) sheets, provided the sheets are squeezed under perfect conditions.

This vehicle is also built from structural elements made by LASER butt welding thick panels together which are often of different types, e.g. front side member:

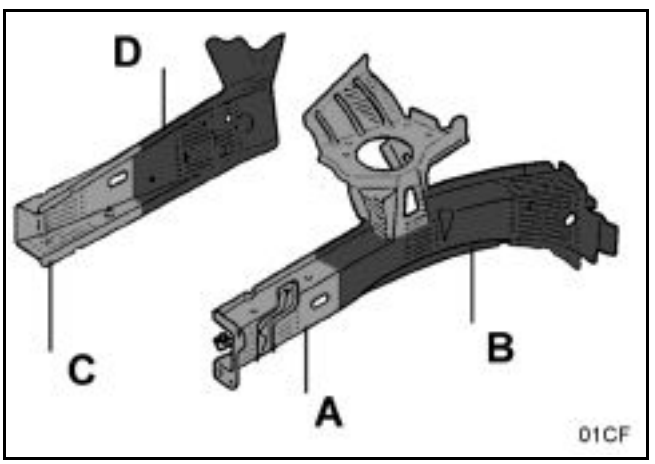

Section A: XE 280P High Tensile steel	**thickness 1.8 mm**
Section B: HE 450M Very High Tensile steel	**thickness 1.8 mm**
Section C: XE 280P High Tensile steel	**thickness 1.5 mm**
Section D: HE 450M Very High Tensile steel	**thickness 2.5 mm**

When two panel thicknesses are shown for the same part in the detailed procedure descriptions, this means that this part consists of two panels which were originally butt welded.
Thicknesses are shown starting from the outer end of the part going towards the vehicle passenger compartment (direction of the impact).
Example of presentation in the manuals:
front side member closure panel 1.5 / 2.5 mm: 1.5 corresponds to section (C) and 2.5 to section (D).

GETtheMANUALS.org

UPPER STRUCTURE

1 Aluminium
2 SMC polyester plastic

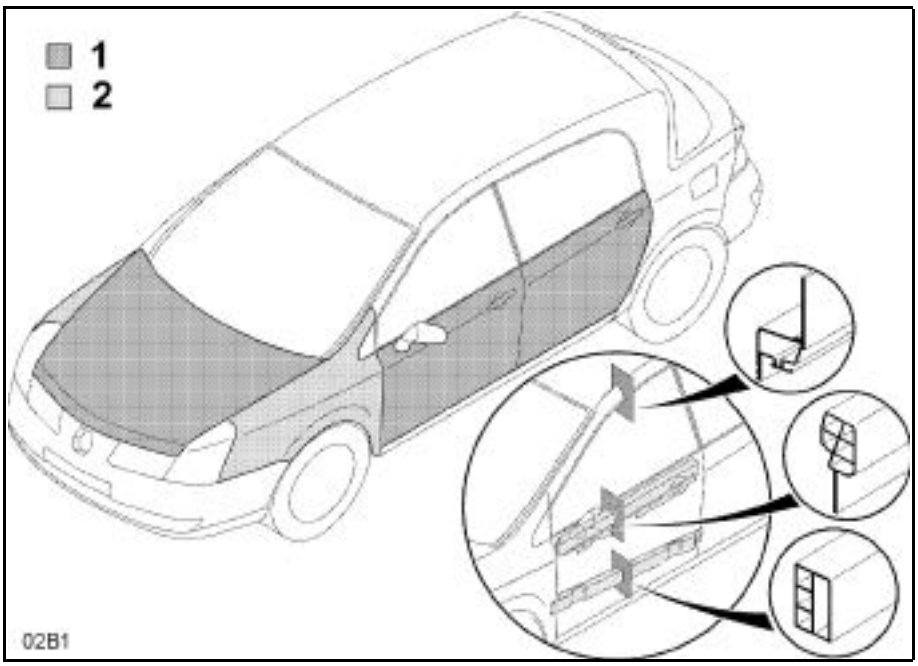

GETtheMANUALS.org

PASSIVE SAFETY

AIRBAG AND SEAT BELTS

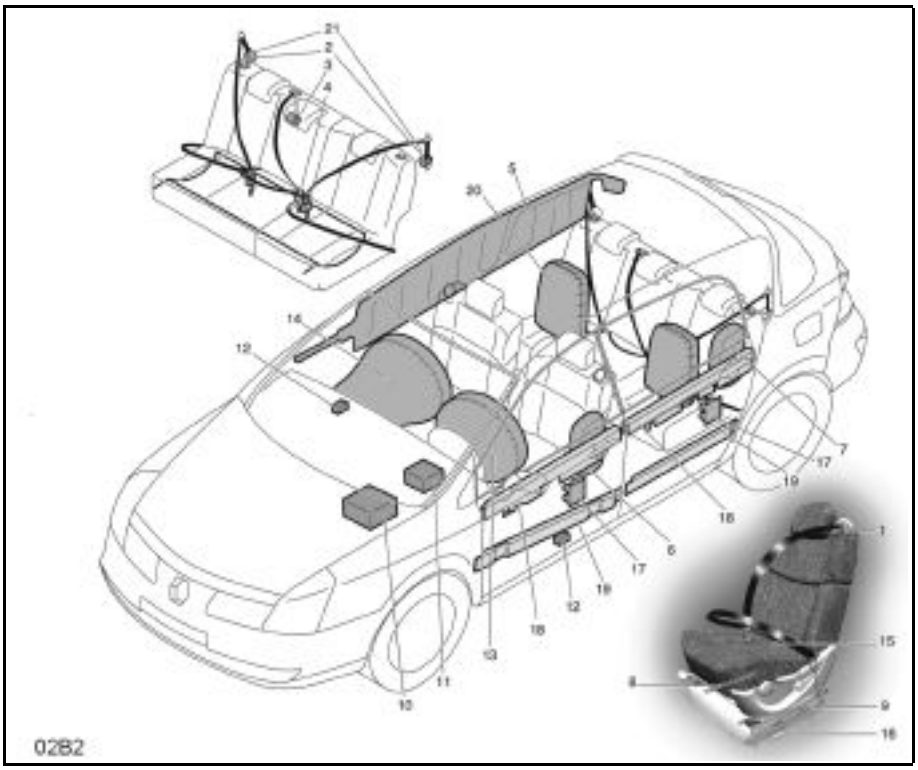

1 Front seat belts fitted on seats with load limiter of 400 daN
2 Rear side seat belts with load limiter of 600 daN
3 Rear central seat belts fitted on seat with load limiter of 600 daN
4 Rear seat wires
5 Head airbags
6 Front chest airbags
7 Rear chest airbags
8 Front buckle pretensioners,
9 Front driver and passenger lap pretensioner
10 Centralised computer
11 Front seatbelt computer
12 Side impact planet wheel computers
13 Driver's front airbag } Adaptable
14 Passenger's front airbag }
15 ISOFIX sensors on front seat
16 Runner sensor (for adaptable airbag)
17 Front and rear hollow anti-intrusion reinforcer
18 Reinforced front and rear moulding
19 Front and rear anti-intrusion impact bars
20 Rear seat belt airbags
21 Rear side pretensioners

GETtheMANUALS.org

FRONT SEATS WITH FITTED SEAT BELTS

GETtheMANUALS.org

VEHICLE PROTECTION

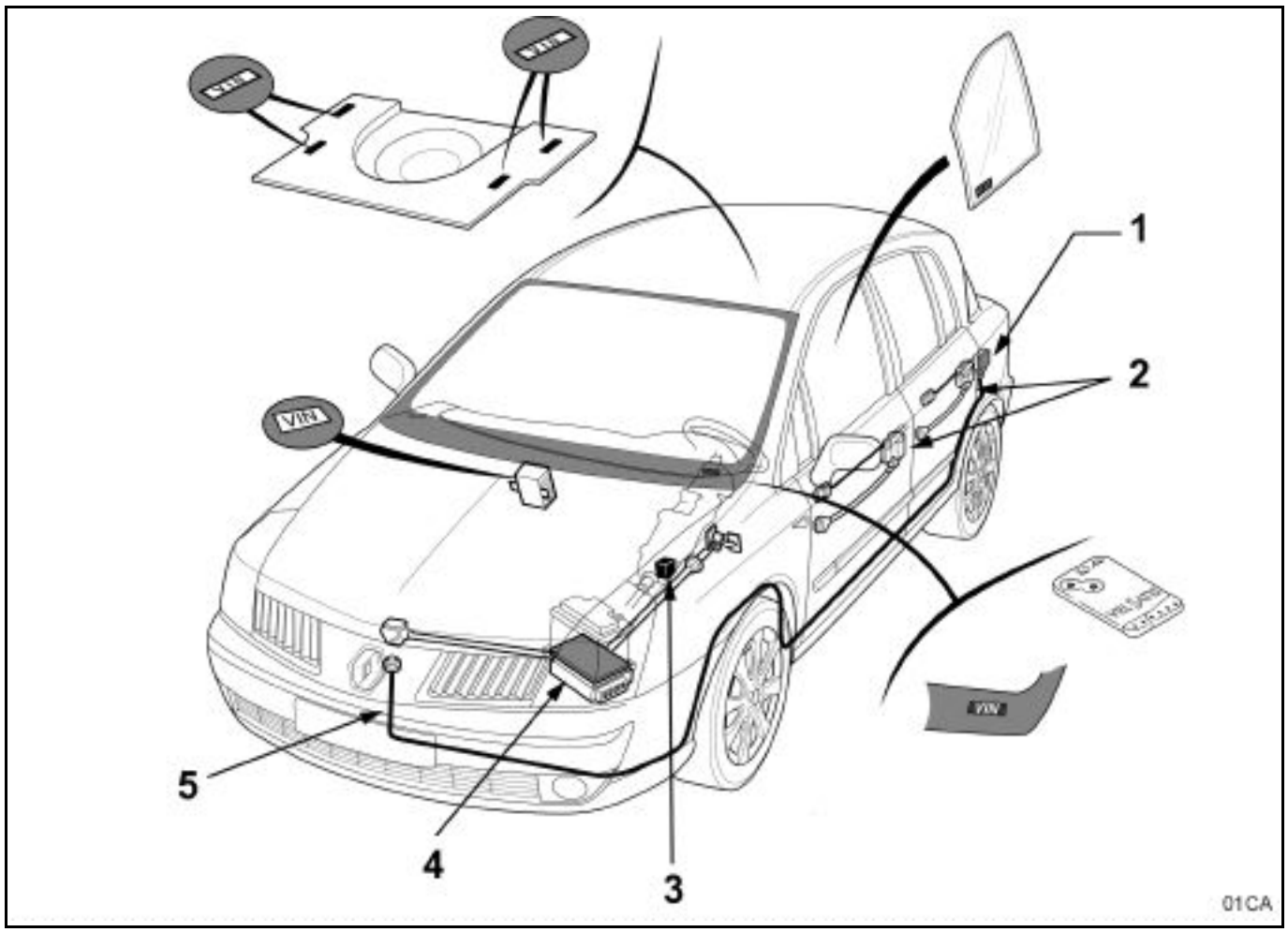

1 Prewired alarm
2 Lock and handle security
3 Steering column protection
4 Computer protection
5 Alarm wiring protection

GETtheMANUALS.org

ACTIVE SAFETY

REAR AXLE

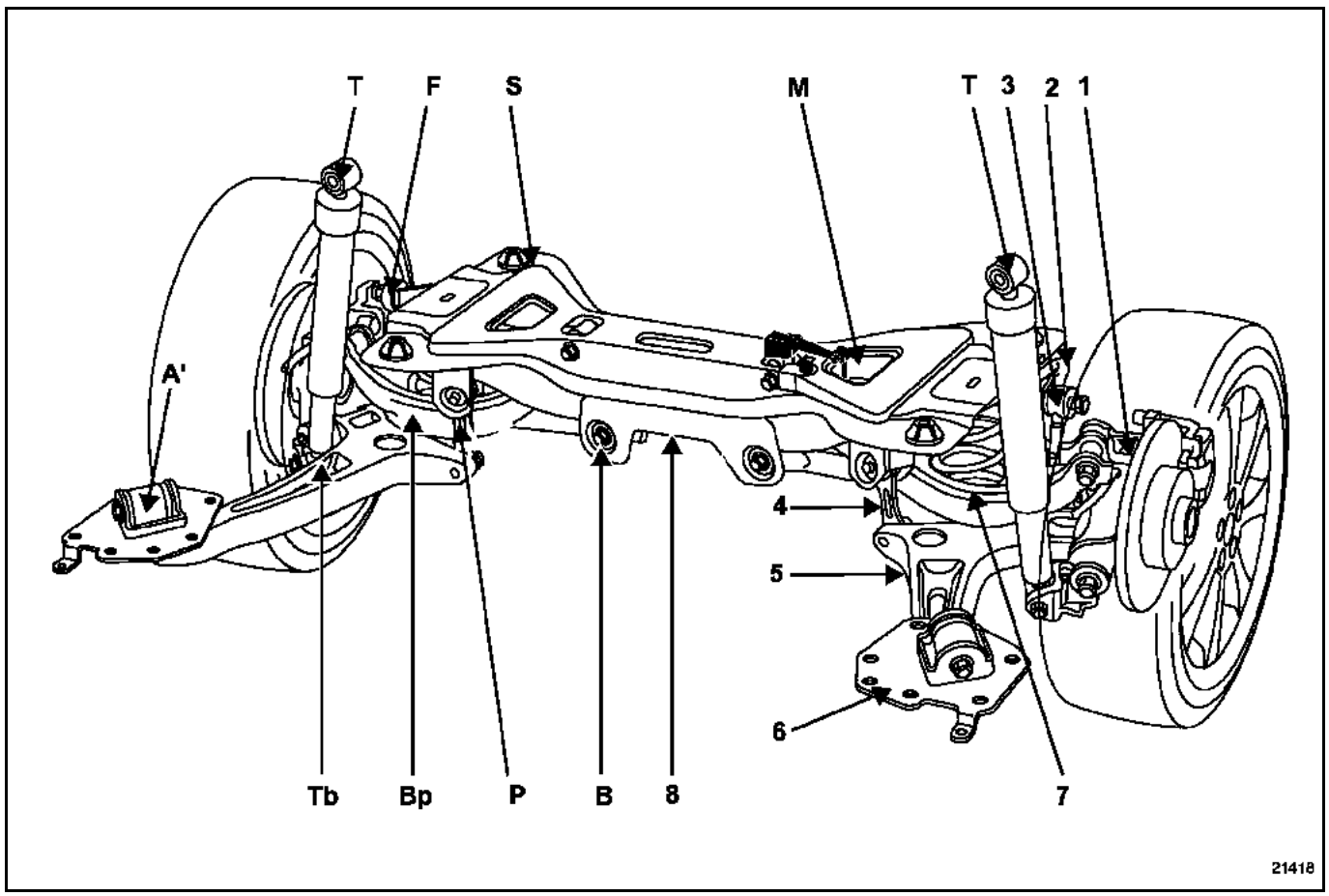

1 Stub-axle carrier
2 Anti-roll bar
3 Anti-roll bar tie rod
4 Vertical arm
5 Longitudinal arm bearing
6 Longitudinal arm
7 Upper transverse arm
8 Rear axle sub-frame
A Lower arm front joint
B Transverse rod interior pin
C Stub-axle carrier lower pin
F Transverse arm exterior pin
H Vertical arm upper pin
M Transverse arm interior pin
T Upper shock absorber mounting
P Vertical arm lower pin
Tb Lower shock absorber mounting
Bp Transverse rod exterior pin
S Sub-frame alignment guides

GETtheMANUALS.org

IMPORTANT

When removing the rear axle, it is essential to position the sub-frame in relation to the rear side member using a gauge, making sure that the sub-frame holes S correspond to the side member guides D. For further information, refer to the relevant sections of the Workshop Repair Manual.

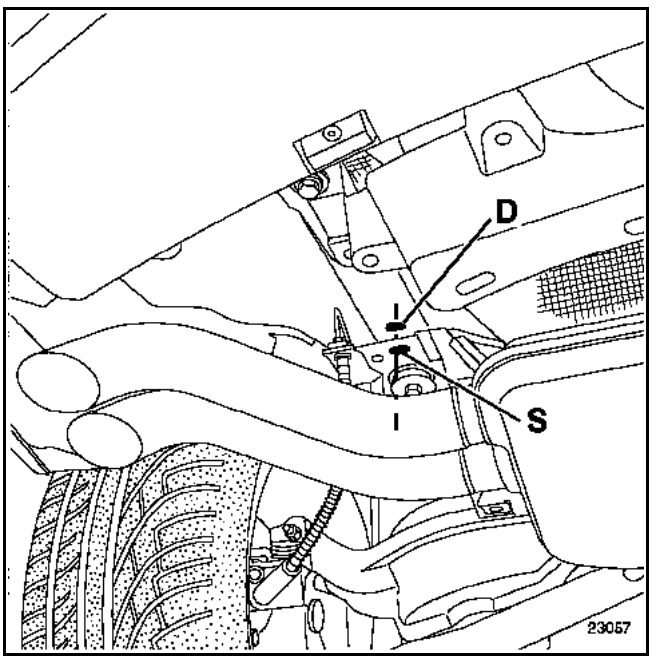

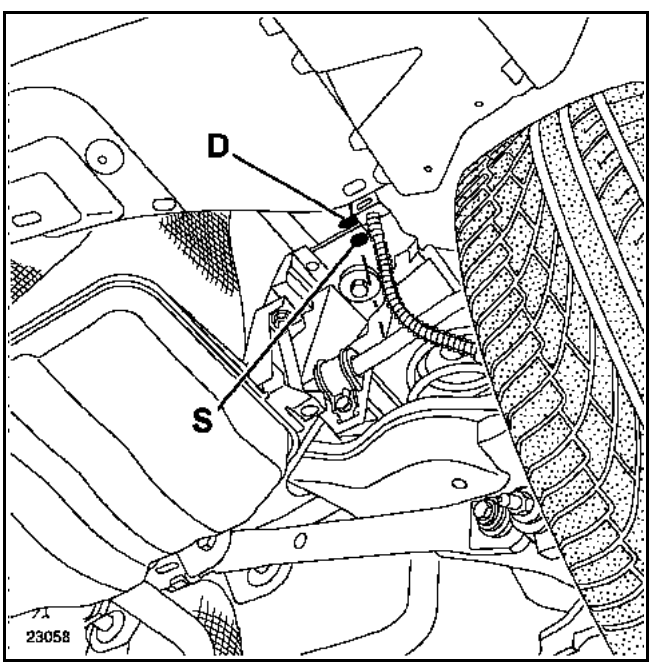

GETtheMANUALS.org

TYRE PRESSURE MONITOR

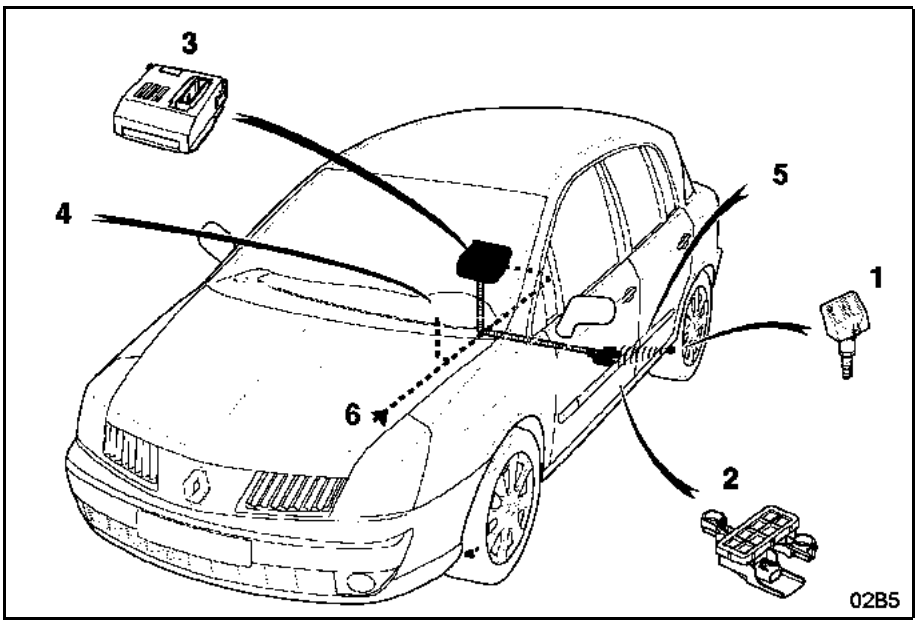

1 Transmitter
2 Receivers
3 Computer
4 Instrument panel alarm
5 Frequency transmission
6 Speed signal

GETtheMANUALS.org

WIPERS

WIPING ANGLES

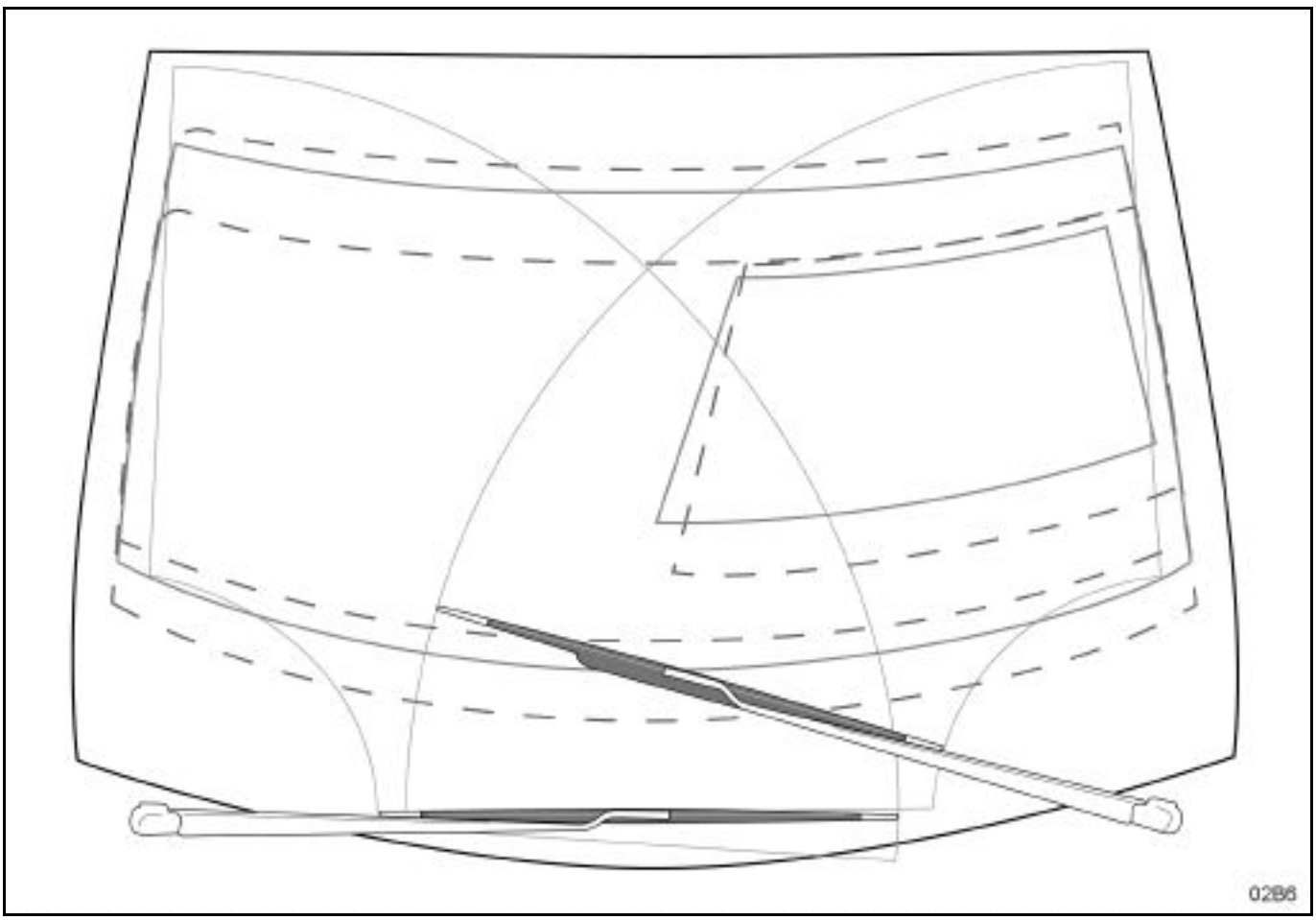

GETtheMANUALS.org

WIPER POSITION

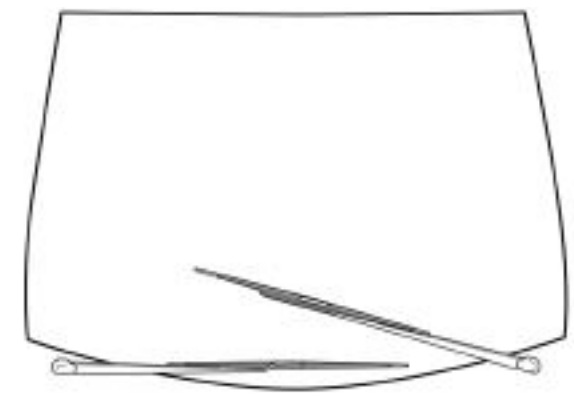

A low position

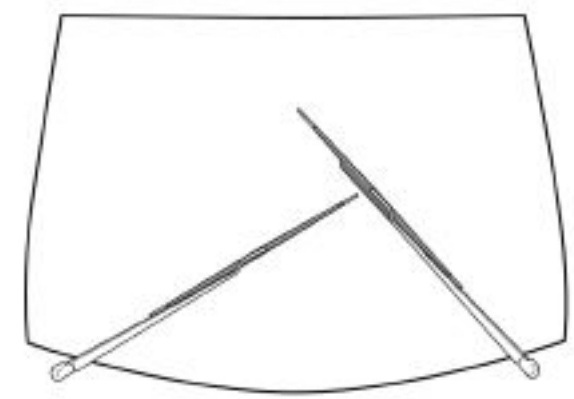

B intermediate position

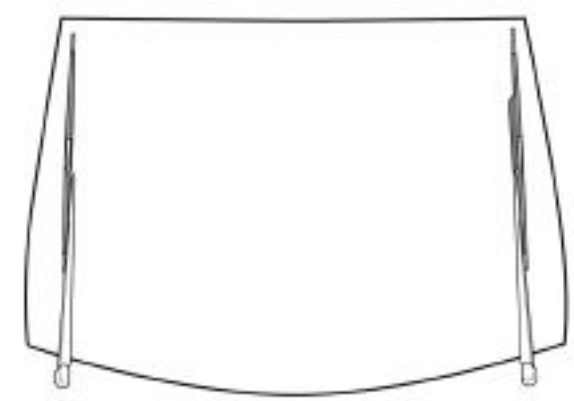

C high position

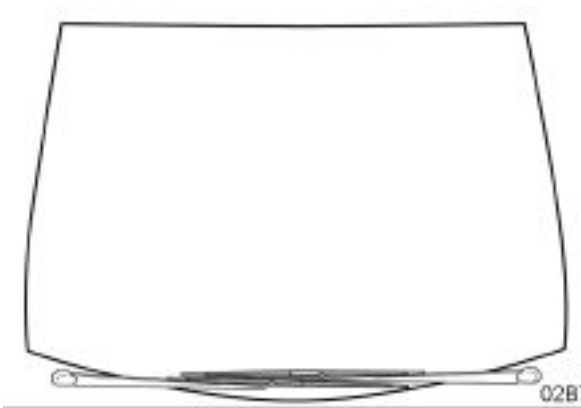

D rest position

GETtheMANUALS.org

WIPER ARMS AND BLADES

The special feature of these wiper blades is their flexibility.

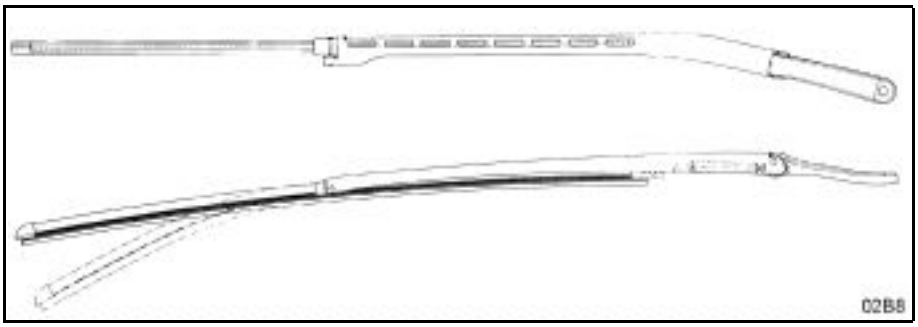

GETtheMANUALS.org

RAIN AND SUNLIGHT SENSORS

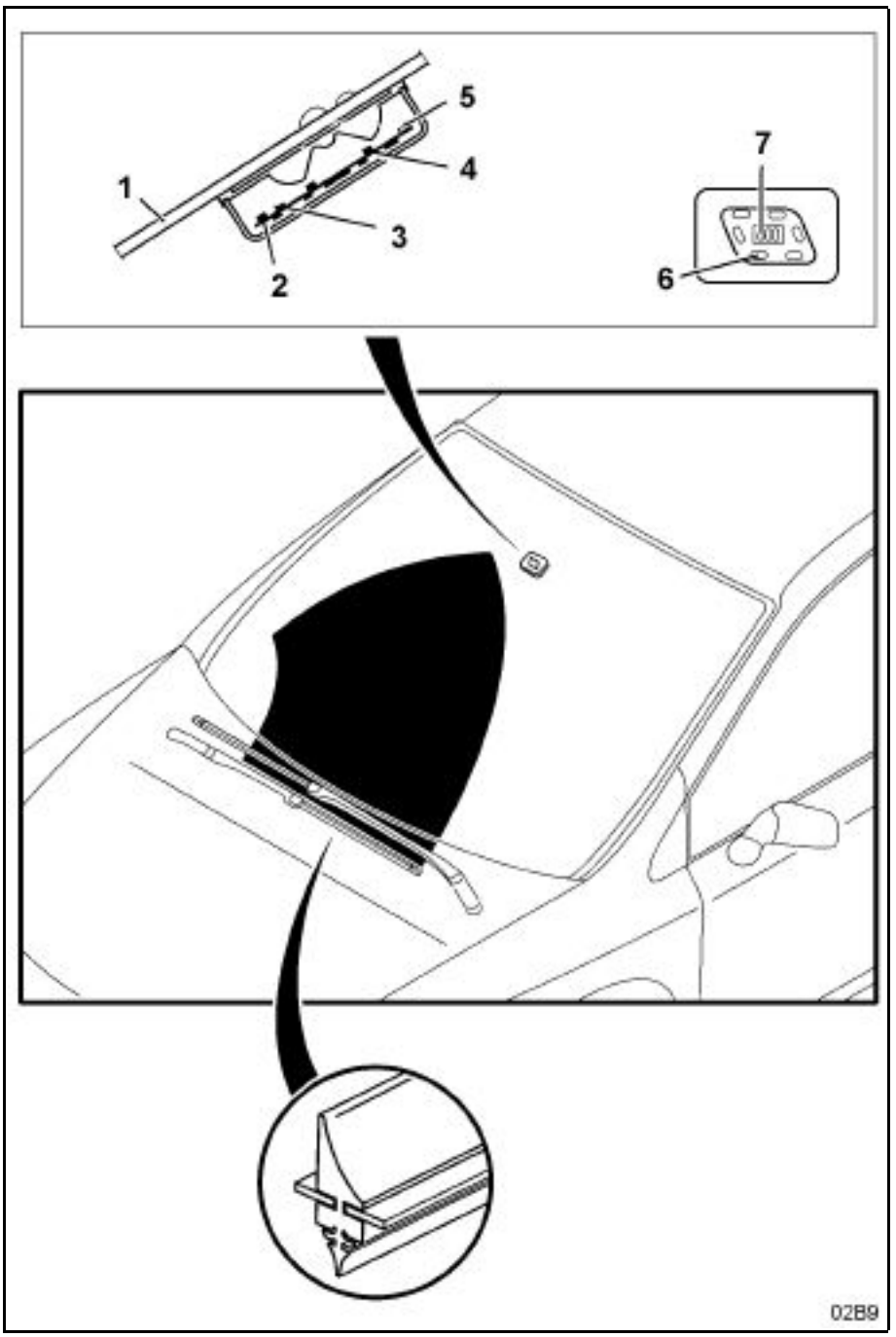

1 Windscreen
2 Ambiant light sensor
3 Receiver diode
4 Long distance light sensor
5 Transmitter diode
6 Rain sensor
7 Light sensors

GETtheMANUALS.org

Light sensor:

Steering sensor:
- angle of vision approximately **7°**
- horizontal vehicle view

An ambiant light sensor:
- angle of vision: **40°**
- vertical vehicle view

Rain sensor:

Four measuring sections:
- two emitter diodes
- two receiver diodes

Ambiant light sensor also used for adjusting sensitivity of day/night function.

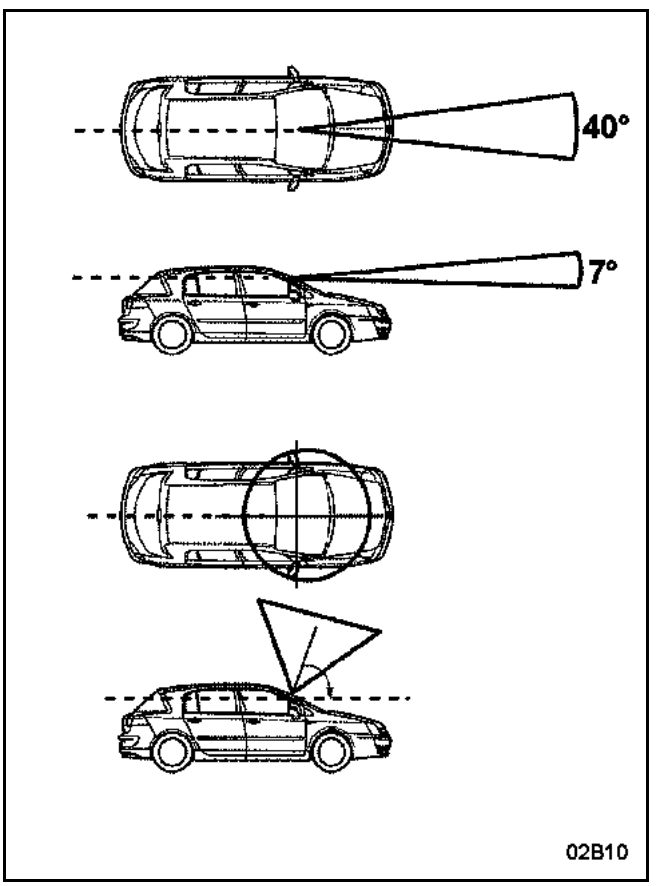

GETtheMANUALS.org

FRONT SEAT FUNCTIONS

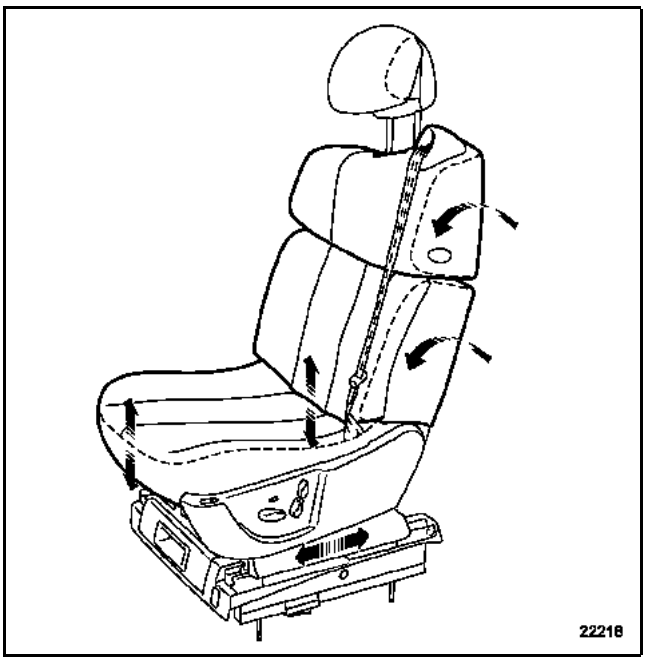

GETtheMANUALS.org

INSULATION

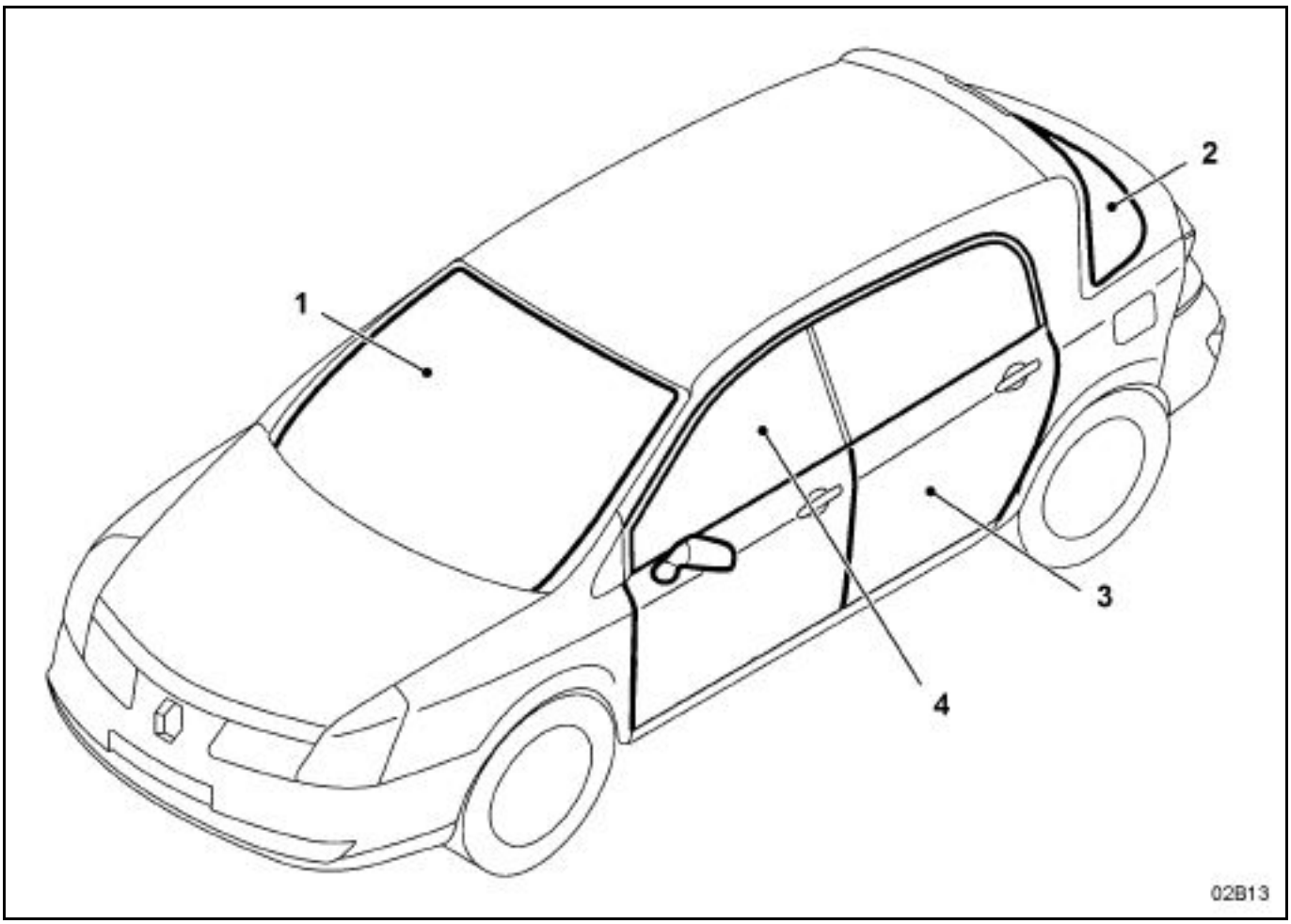

1 Windscreen thickness **5.5 mm**
2 Rear screen thickness **4 mm**
3 Insulation sheets
4 Side window thickness **5 mm**

GETtheMANUALS.org

SOUNDPROOFING

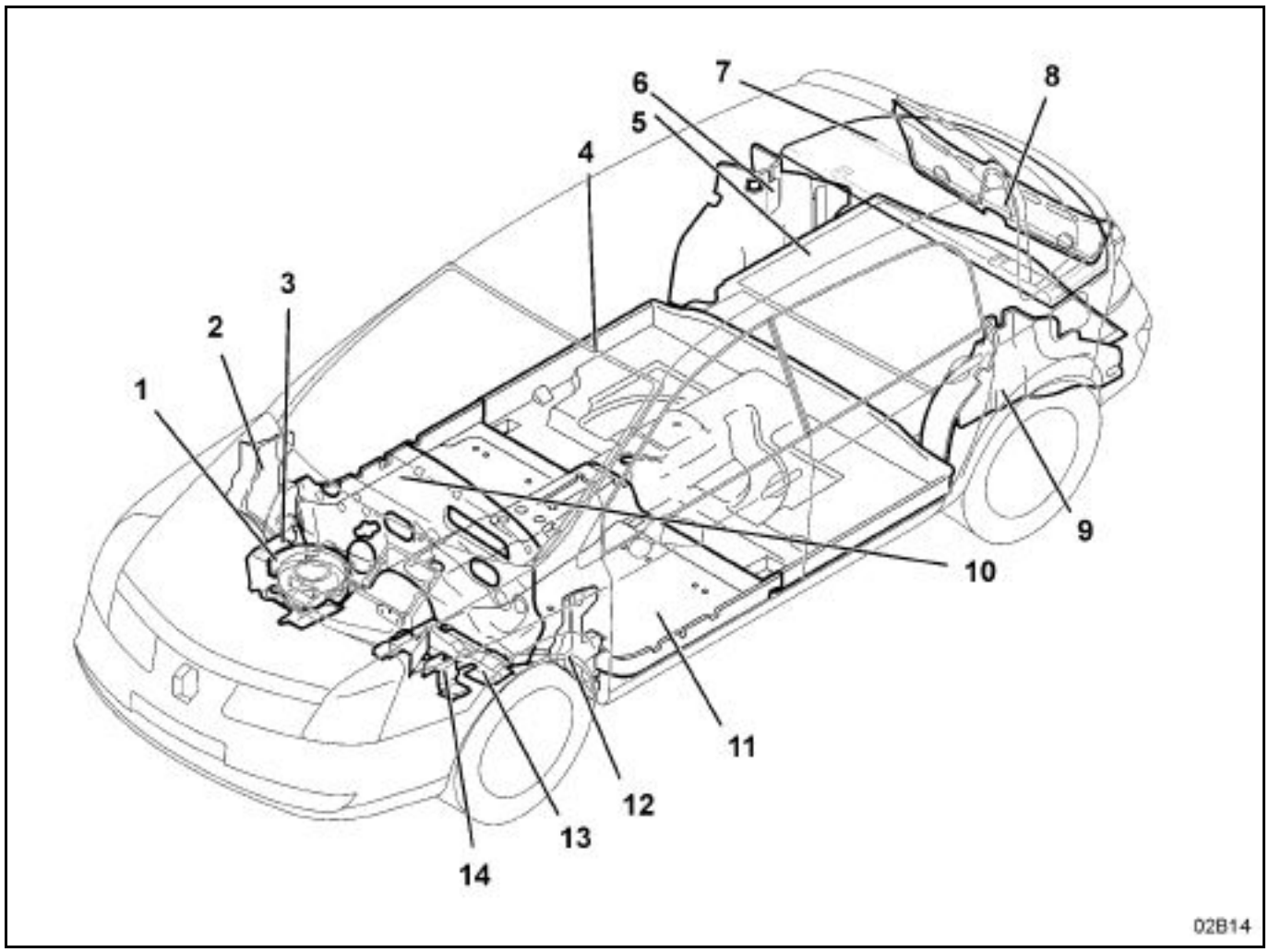

1 Fan assembly
2 Half cowl side
3 Bottom of floor
4 Rear floor
5 Boot
6 Rear wheel arch
7 Rear parcel shelf
8 Rear skirt
9 Rear wheel arch
10 Bulkhead
11 Front floor
13 Instrument panel
14 Tunnel

GETtheMANUALS.org

DIAGRAM

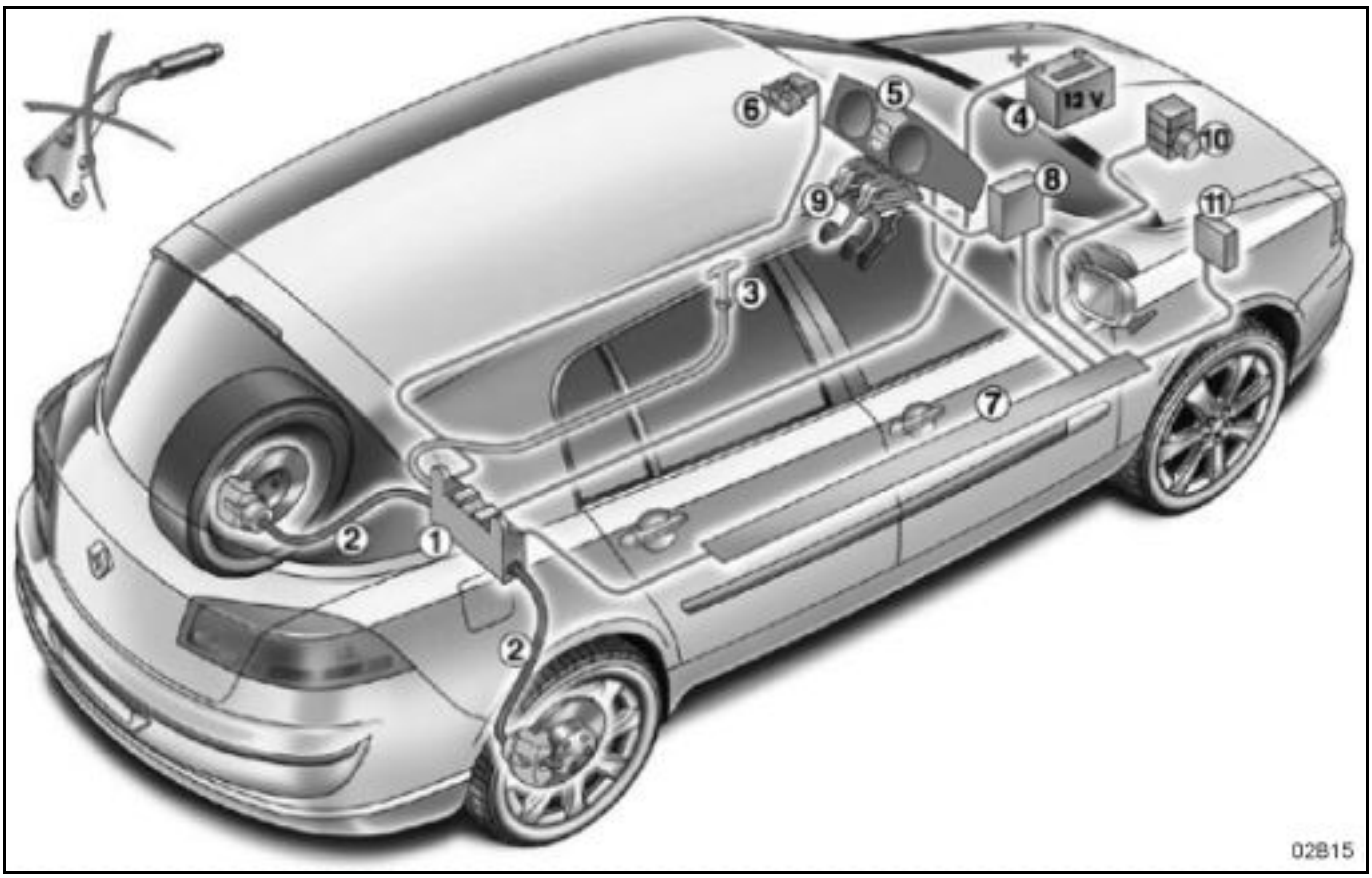

1 Computer (electric and electronic motor)
2 Brake cables
3 Emergency control
4 Battery
5 Warning light
6 Lock/unlock control handle
7 Multiplex connections
8 UCH computer
9 Clutch pedal switch
10 ABS computer
11 Injection computer

GETtheMANUALS.org

DESCRIPTION

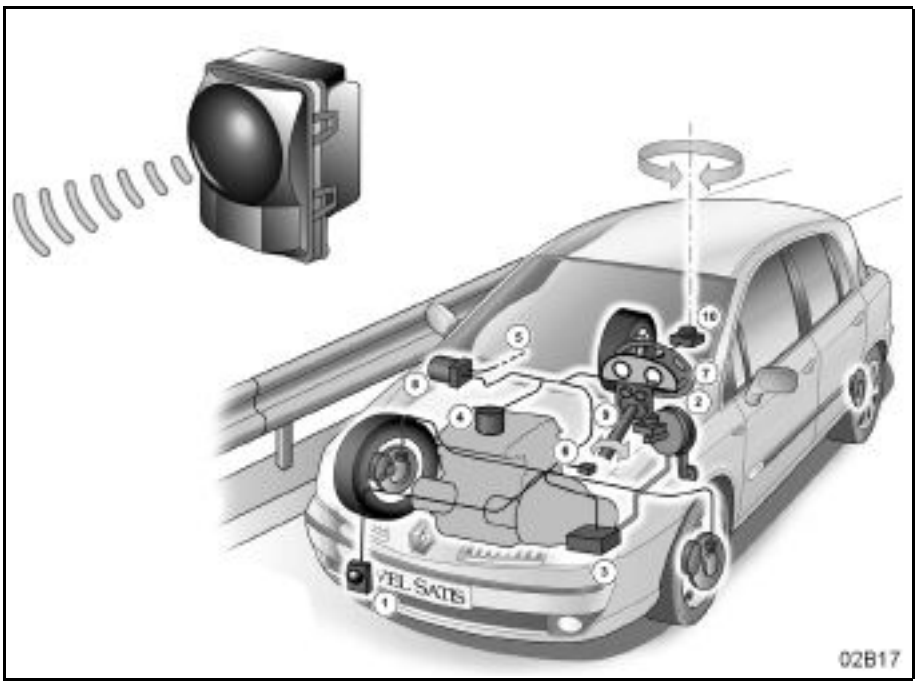

1 Radar
2 Steering wheel switch
3 Engine management computer
4 Motorised throttle unit
5 Multiplex connections
6 Automatic gearbox
7 Instrument panel
8 ABS computer - Electronic Stability Program (active braking)
9 Steering wheel angle sensor
10 Yaw speed and lateral acceleration sensor

GETtheMANUALS.org

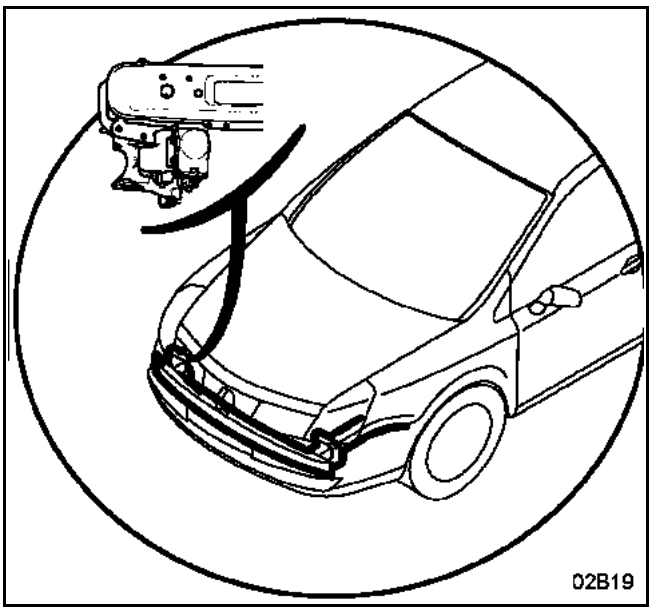

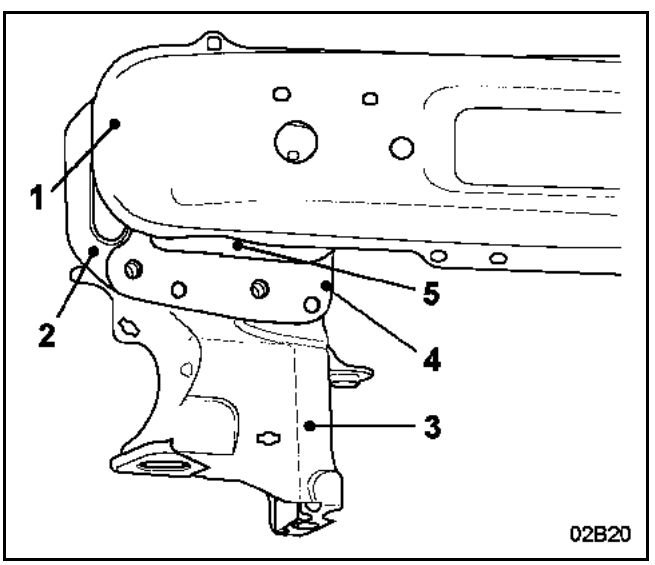

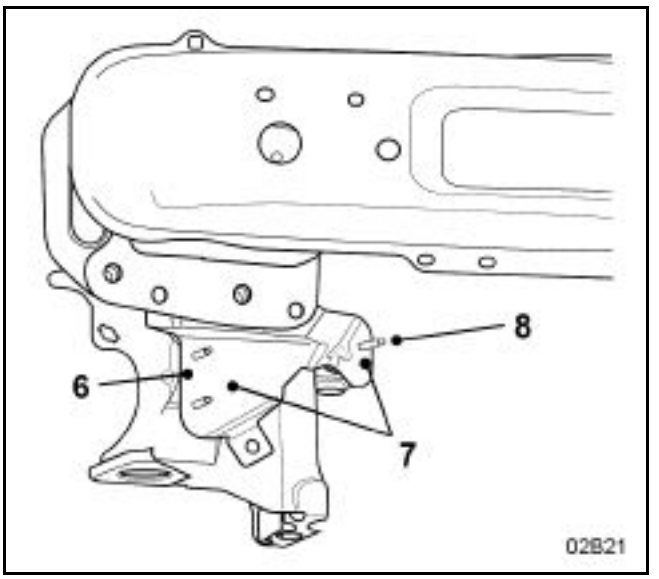

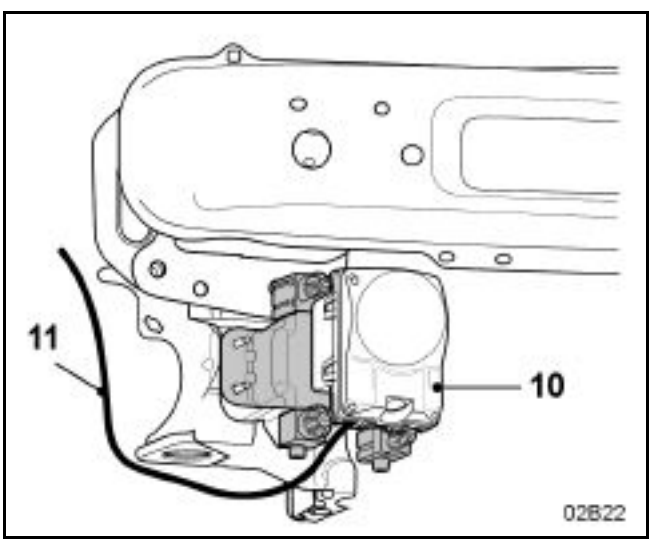

1 Front end cross member
2 Side member closure panel
3 Radiator cross member mounting
4 Mounting plate for cross member on side member
5 Absorber unit
6 Radar mounting
7 Radar supporting plane
8 Radar supporting plane
9 Radar mounting guide pins
10 Radar
11 Electrical wiring

GETtheMANUALS.org

REMINDERS

1 Vehicles fitted with the card opening control have an electrically locking steering column. To be able to move the vehicle when the battery is removed or simply disconnected, it is necessary to insert the card in the reader. Put it in accessories position, lock the steering and remove the card before disconnecting the battery. The steering column remains unlocked as long as the battery is disconnected.

2 During welding operations on the vehicle bodywork, it is advisable to disconnect the two battery terminals and disconnect and remove the electronic computer components located close to the structural parts which have been replaced. These may be damaged by the flow of current from the electrical weldings through resistance points or the arch.

POSITION OF COMPUTERS IN THE VEHICLE

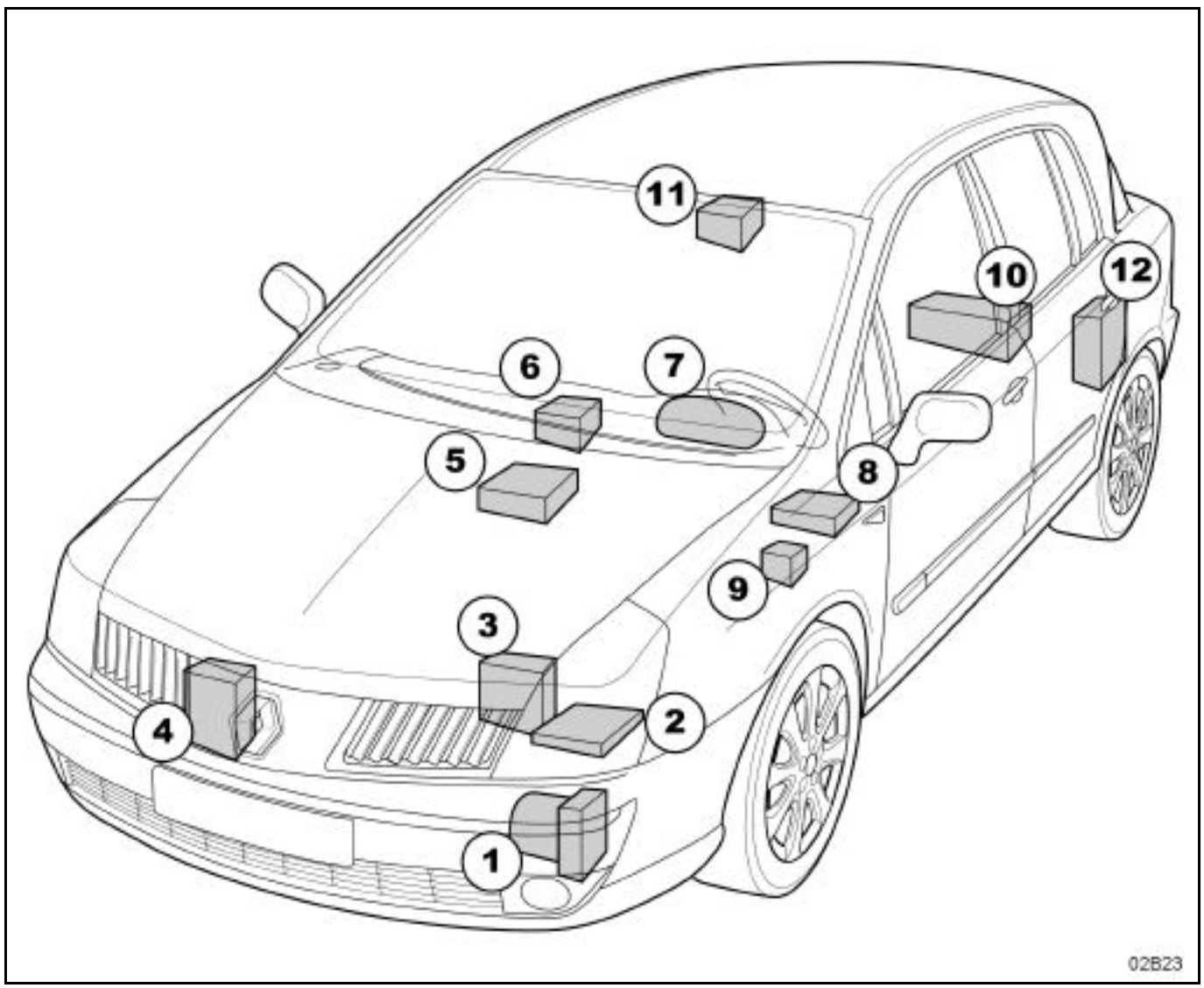

1 Anti-lock Braking System
2 Engine management computer
3 Transmission
4 Distance cruise control:
5 Air conditioning
6 Airbag
7 Instrument panel
8 UCH
9 Discharge bulb beam adjustment
10 Automatic parking brake
11 Proximity sensor
12 Tyre pressure monitor

GETtheMANUALS.org

Before carrying out repairs to the bodywork of a car, even if the damage seems slight, it is necessary to carry out a series of tests:

VISUAL INSPECTION
This inspection involves examining the sub-frame of the vehicle where mechanical components are mounted and in the crumple zones or vulnerable areas in order to detect creases where materials have been damaged.

TRAMMEL GAUGE CHECK
The visual inspection may be completed using a trammel gauge which enables some damage to be measured by symmetrical comparisons (for more detail on each check point, see the repair bench paragraph below).

CHECKING THE ANGLES OF THE RUNNING GEAR
This is the only check that can determine if the impact on the vehicle has affected the vehicle road holding.

IMPORTANT: In limit cases, it will also be necessary to check the running gear components, which may also have suffered damage.
In principle, no welded component in the body shell should be replaced without ensuring that the sub-frame has not been affected by the impact.

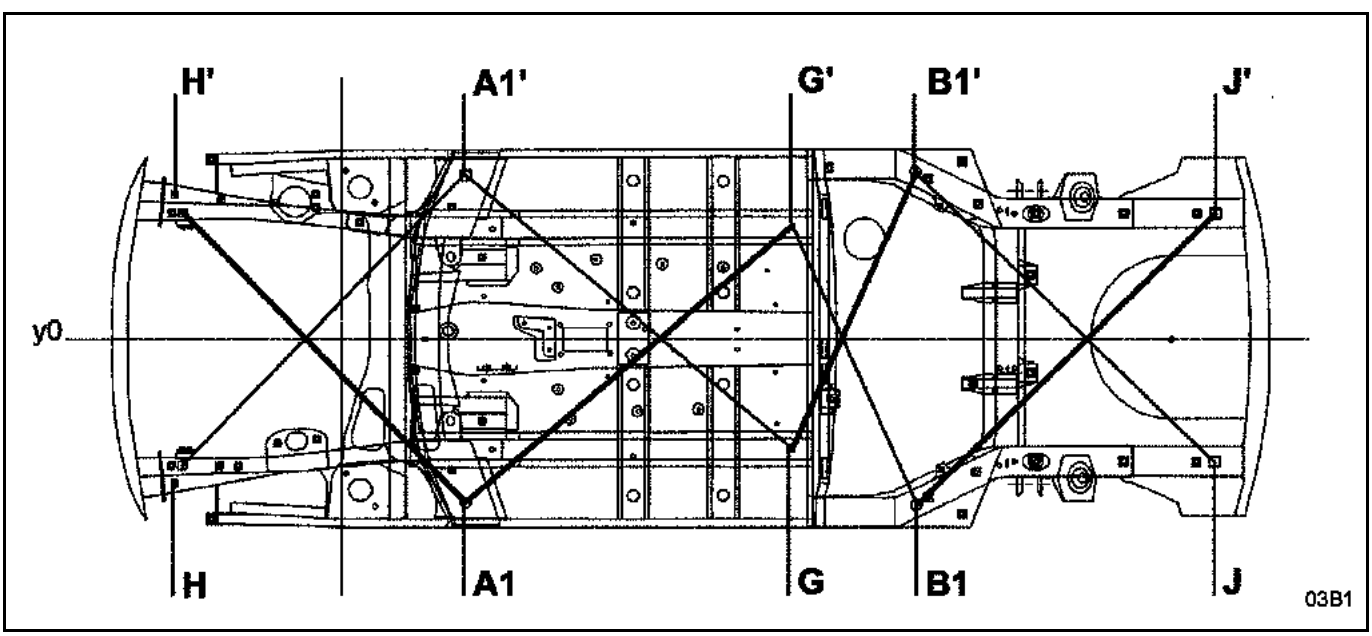

Chronological order of checks:

FRONT impact:
1: G - A1' = G' - A1
2: A1'- H=A1H'
REAR impact:
1: G - B1' = G' - B1
2: B1' - J = B1 - J'

GETtheMANUALS.org

GAUGE POINTS

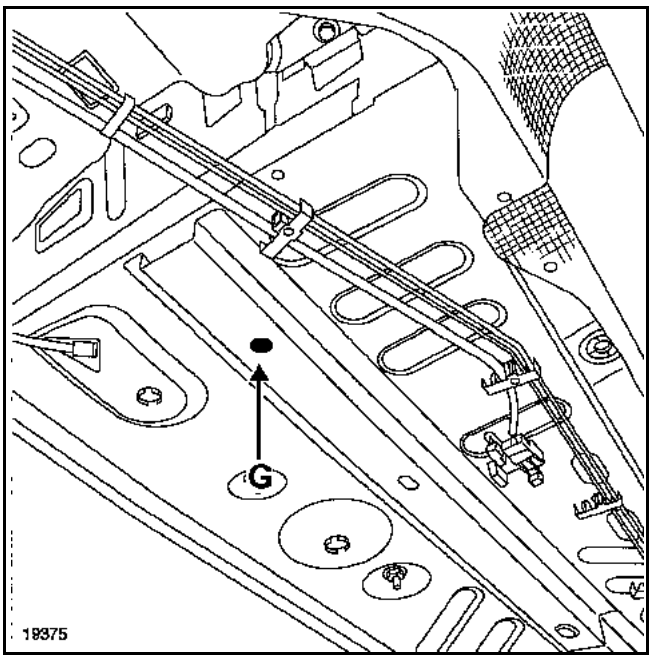

Point G
Start point for checking points (A1) and (B1).

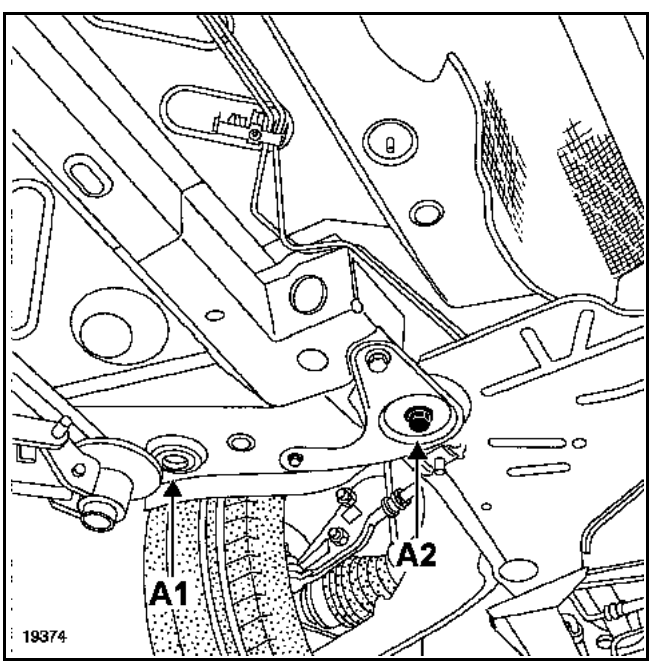

Point A1
Front body reference.

NOTE: The point A2 can also be used as a reference point if point A1 is found not to be correct.

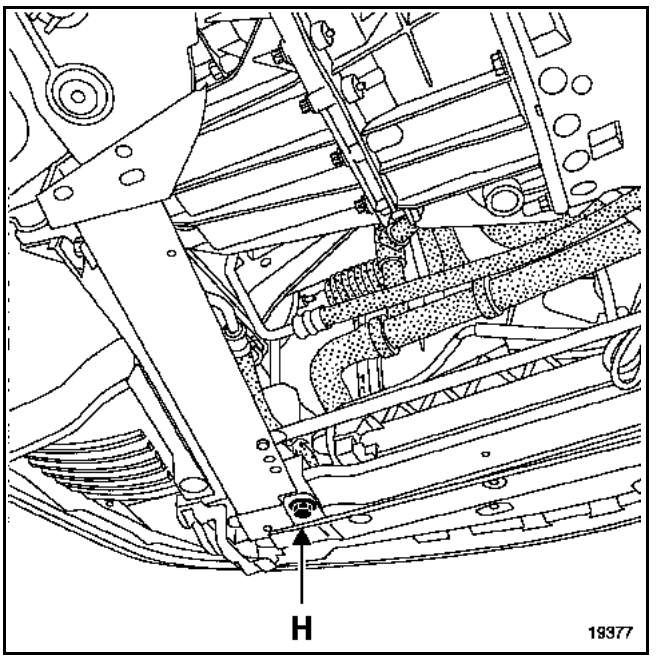

Point H
Front end of front side member.

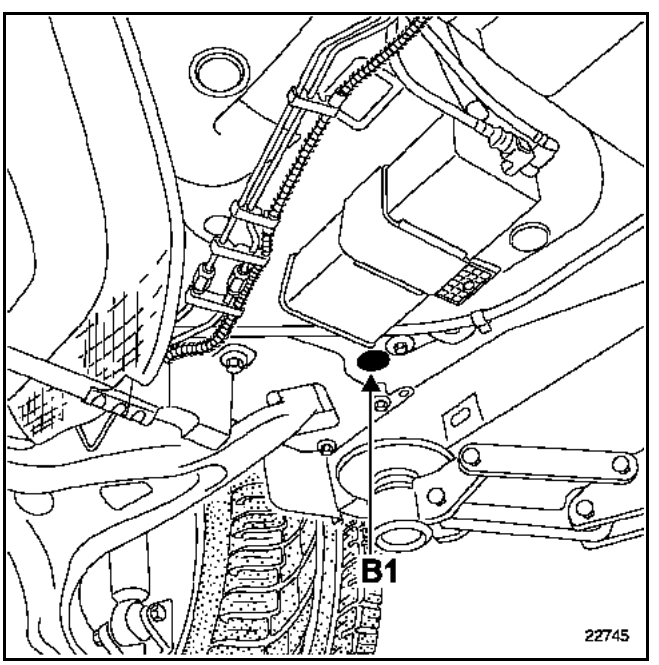

Point B1
Rear axle assembly leader pin.

GETtheMANUALS.org

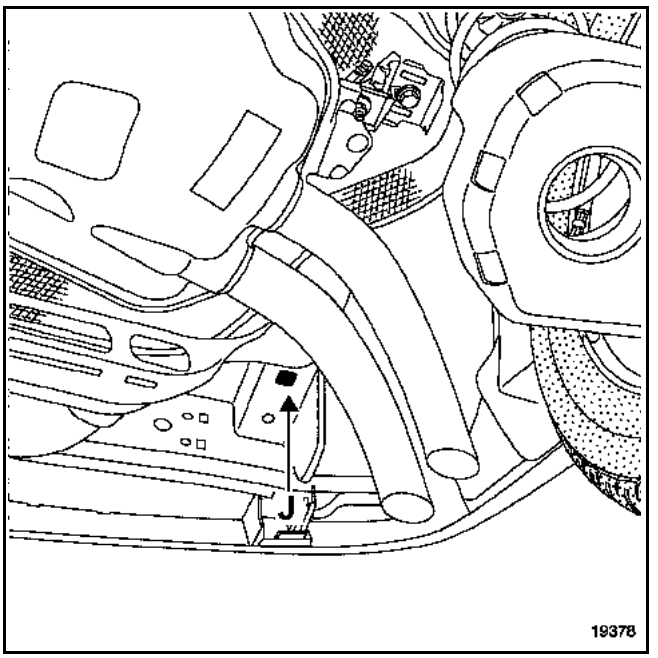

Point J
Rear end of rear side member.

REMINDER

The underbody holes are fitted with plastic blanking covers to ensure that all cavities are watertight.

Some of these blanking covers have to be removed during testing.

If any of the blanking covers have deteriorated, they must be renewed in order to maintain the vehicle's anti-corrosion warranty.

GETtheMANUALS.org

AREAS OF IMPACT

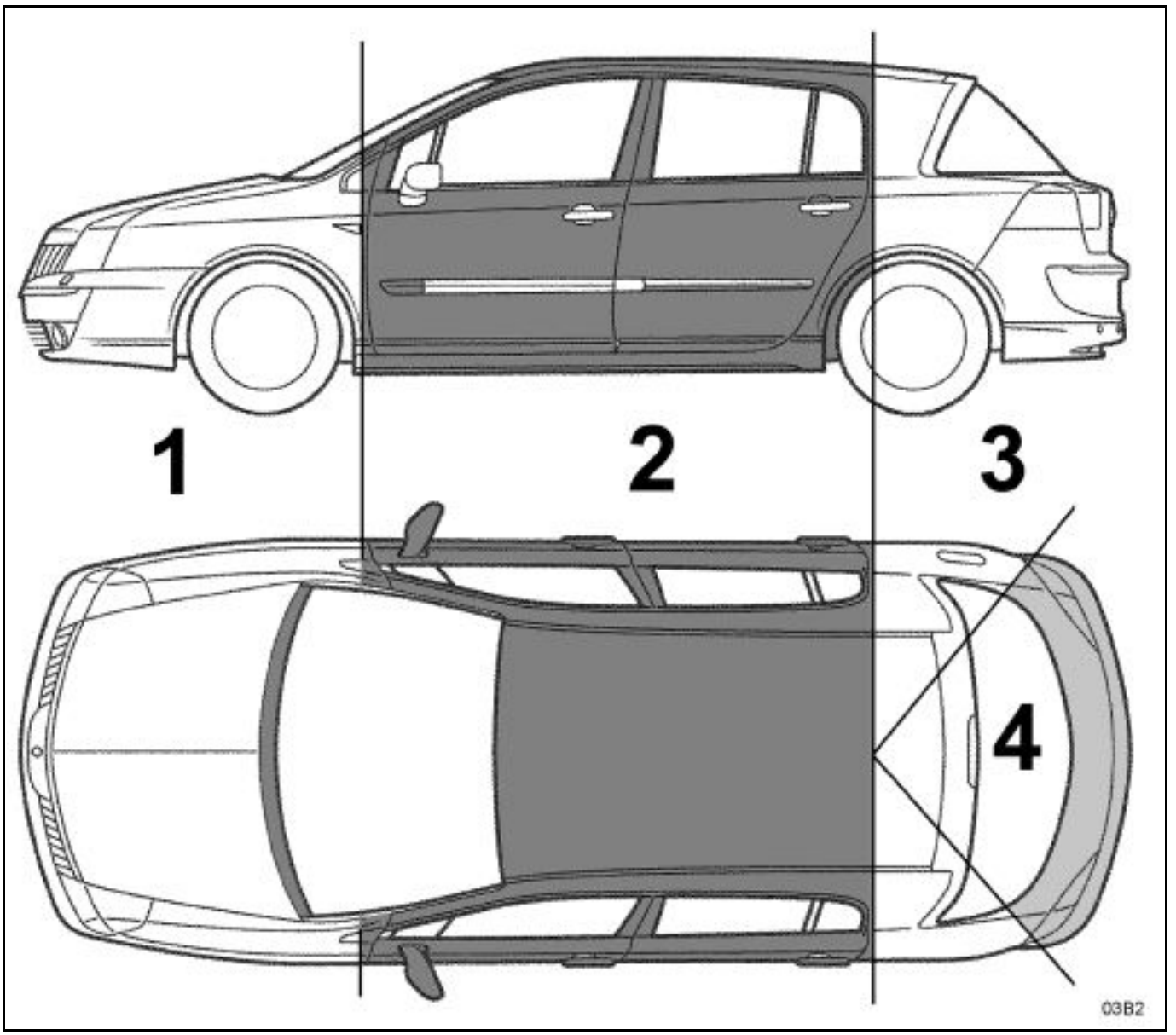

1 FRONT IMPACT
2 SIDE IMPACT
3 REAR SIDE IMPACT
4 REAR IMPACT

GETtheMANUALS.org

Replacement part combinations depending on impacts

Without panelwork operations			
	Basic operations	**Additional operations 1st degree**	**Additional operations 2nd degree**
Front impact			
	stone shield	bonnet front-end lower cross member	front upper cross member
	bonnet	front upper cross member	
	wing	bonnet	front upper cross member
Side impact			
	front door	front wing	rear door
	front door	rear door	
	rear door		
Rear impact			
	Stone shield	tailgate	
	tailgate		

GETtheMANUALS.org

With panelwork operations

FRONT IMPACT

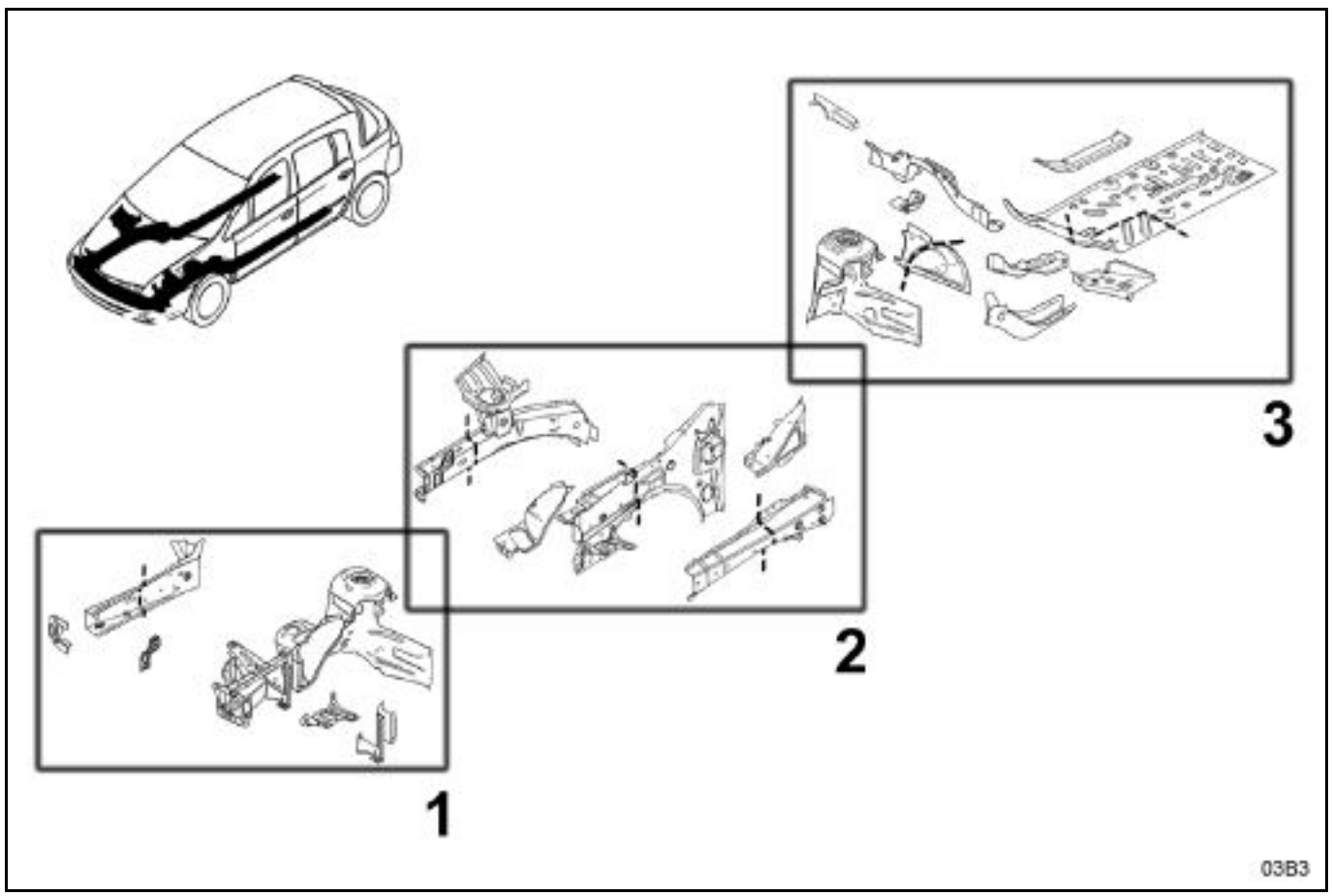

1st Degree
front end side cross member
front side member closure panel
front upper cross member mounting
front half unit

2nd Degree
scuttle side panel with upper reinforcement.
side member, front section
wheel arch, front section

3rd Degree
wheel arch
side bulkhead
front under-floor cross member
sub-frame mounting unit
side cross member
side floor

GETtheMANUALS.org

SIDE IMPACT

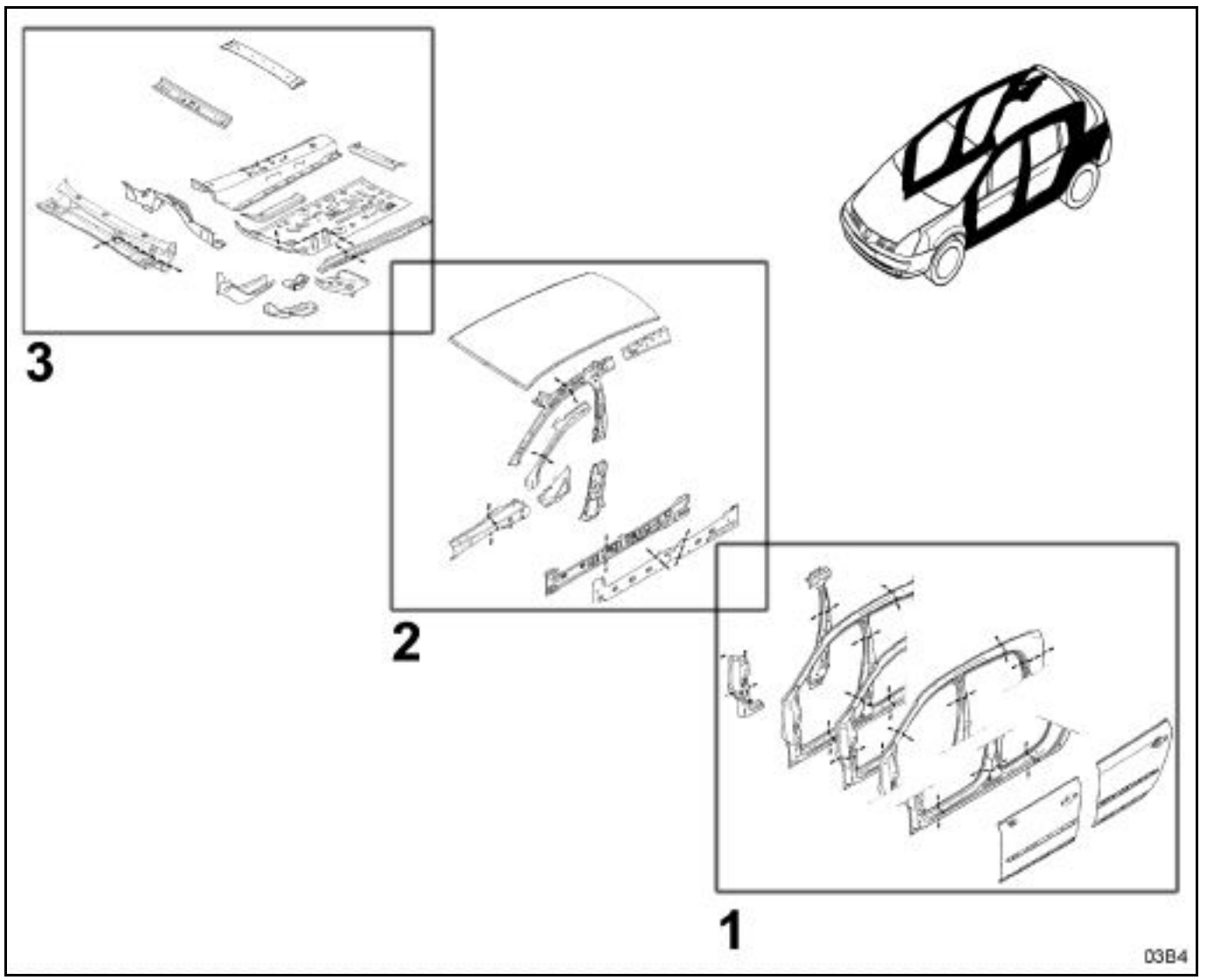

1st Degree
front door panel
front door pillar with reinforcement
rear door panel
centre pillar with reinforcement
body side, front section, with reinforcements
sill panel

2nd Degree
front door pillar lining
windscreen pillar lining
centre pillar lining
sill panel lining with reinforcement
roof

3rd Degree
heating bulkhead
bulkhead
front side cross member
rear end of front side member
rear floor
tunnel
tunnel stiffener
roof cross members

GETtheMANUALS.org

REAR SIDE IMPACT

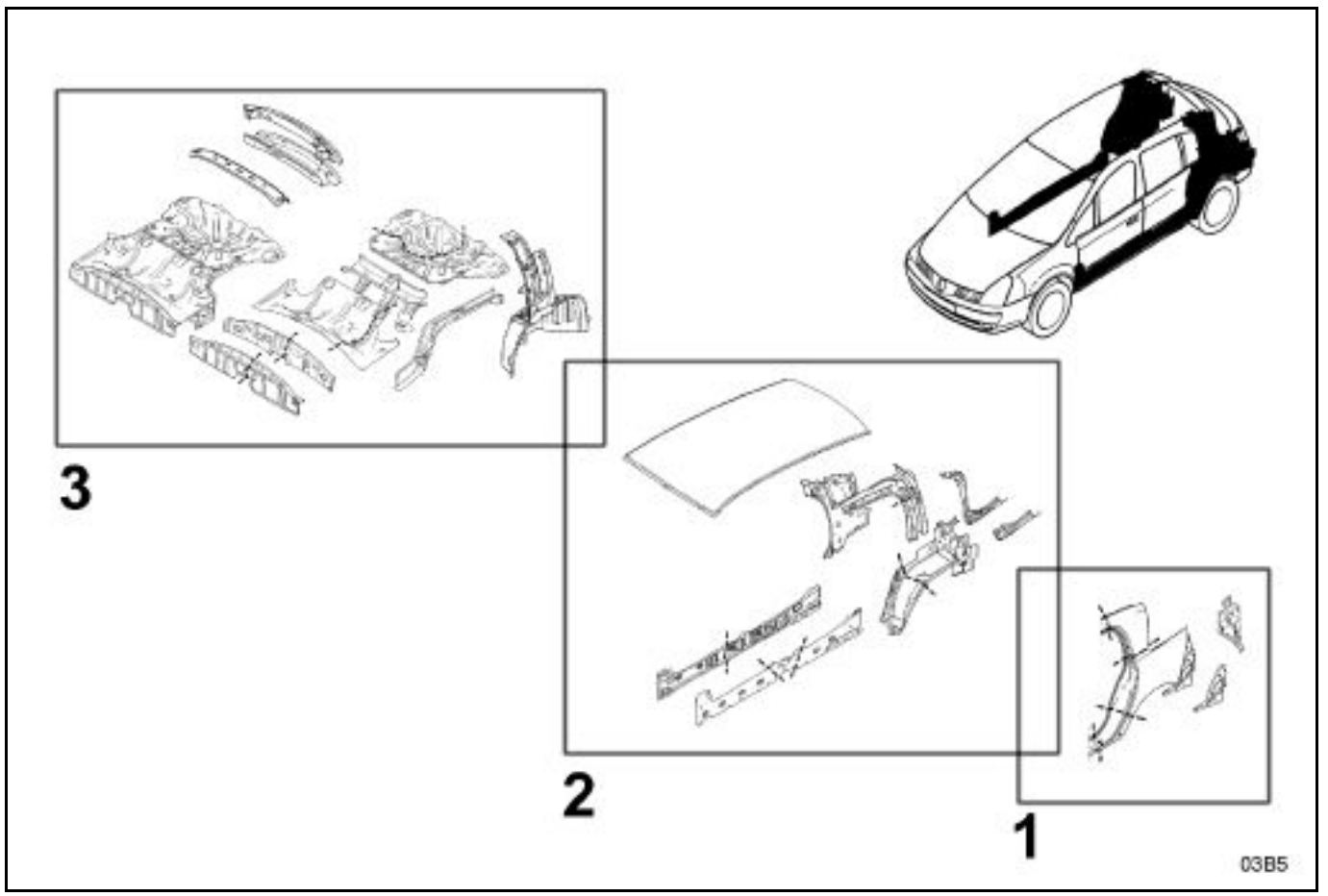

1st Degree
wing panel
wing panel extender
light mounting

2nd Degree
outer wheel arch
quarter panel with reinforcement
rear panel
sill panel with reinforcement
roof

3rd Degree
inner wheel arch
complete side member
rear floor unit
plenum chamber cross member
rear unit

GETtheMANUALS.org

REAR IMPACT

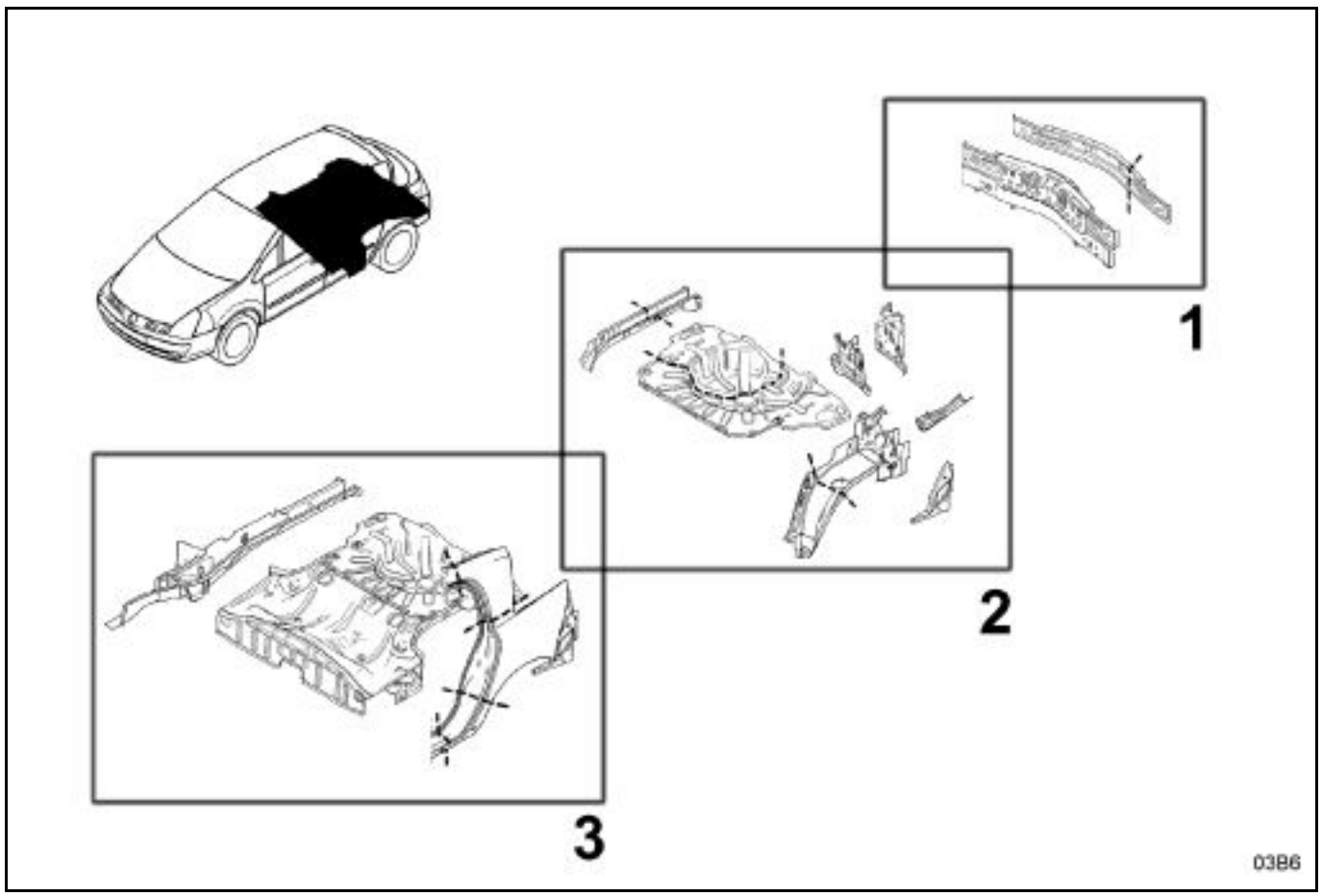

1st Degree
rear end panel
rear end cross member

2nd Degree
rear floor
light mounting
rain channel
outer front wheel arch
wing panel extender
front side member rear section

3rd Degree
wing panel
complete side member
rear floor unit

GETtheMANUALS.org

PARTS REQUIRING A STRAIGHTENING PLATE

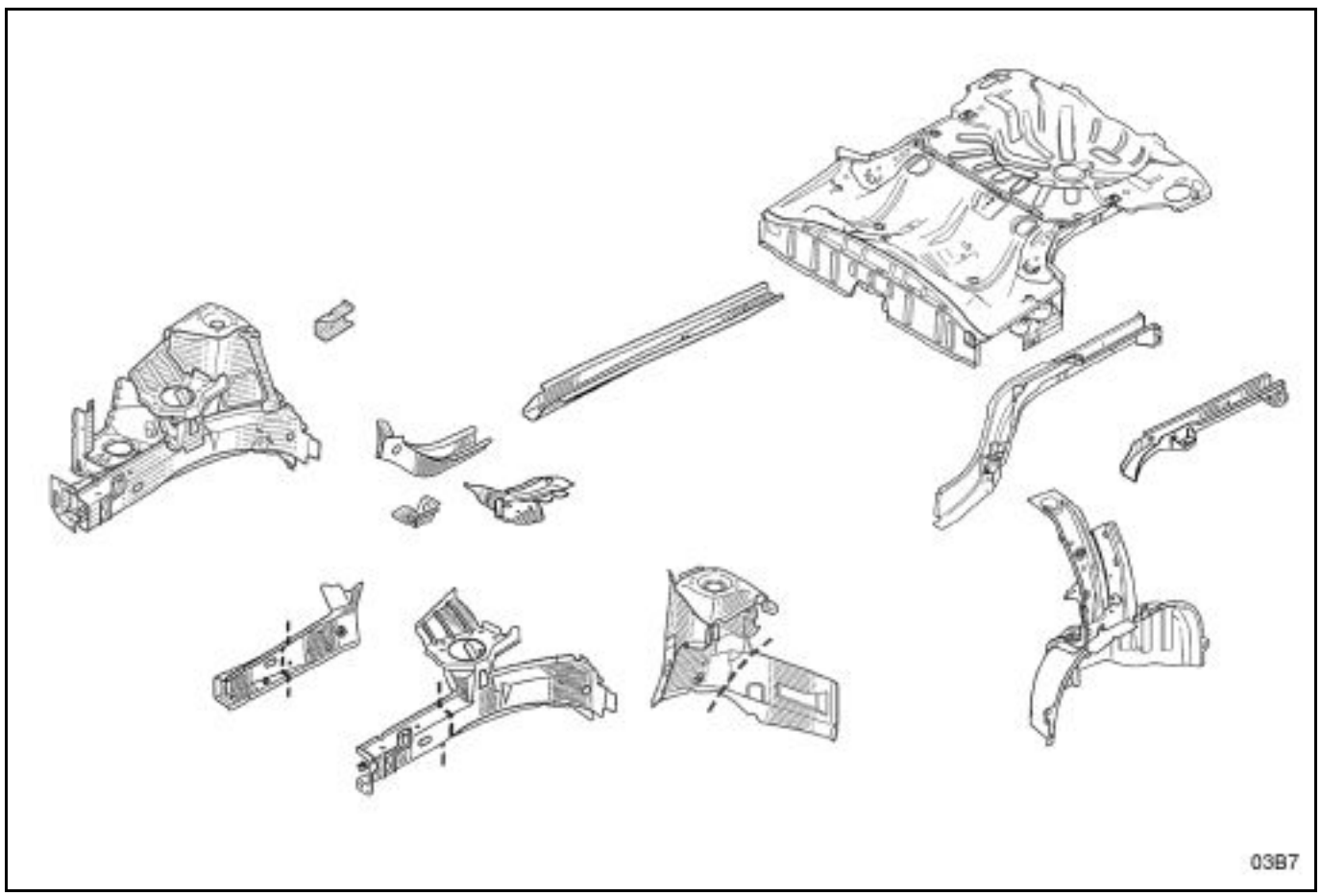

GETtheMANUALS.org

1. PRINCIPLE REFERENCE POINTS FOR SETTING VEHICLE TRIM LEVEL

A - FRONT SUB-FRAME REAR MOUNTING

This is the main front reference point for setting the vehicle trim level.

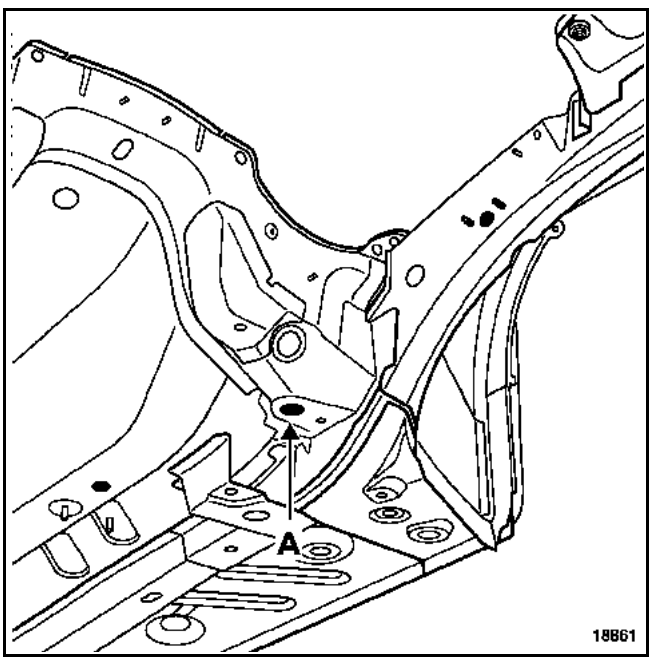

1 - Front mechanical components removed

NOTE:
on the left-hand side, the hole is round;
on the right-hand side, it is slotted.

If replacing the subframe rear support, this reference point is replaced temporarily by point (M), located on the rear section of the front side member, point (A) thus being used for positioning the replaced part.

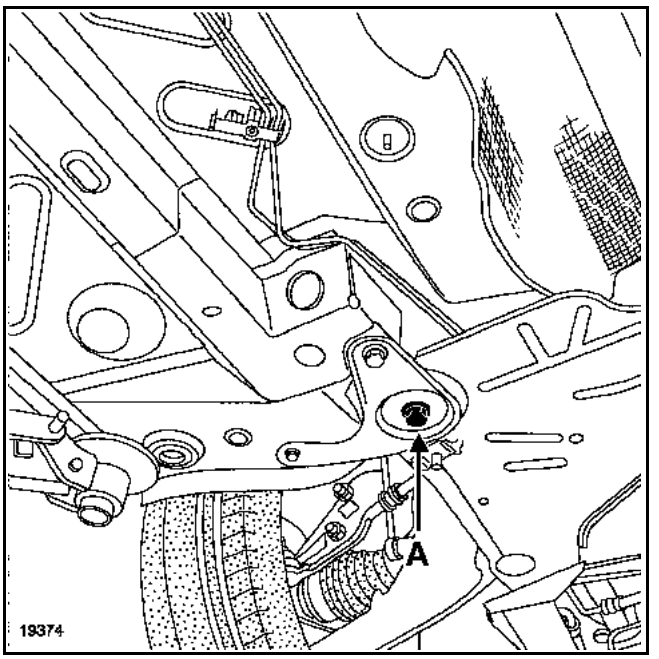

2 - Front mechanical components in place

The bracket covers the sub-frame mounting bolt.

Two possible cases can arise:
1 If the rear of the vehicle is being rebuilt, these two points alone can be used to align and support the front of the vehicle.
2 For a light frontal impact not requiring removal of the front axle sub-frame.

if in doubt regarding the damage to one of the main reference points (A or B), it is advisable to use the two additional points located in the area not affected by the impact to confirm the trim level.

GETtheMANUALS.org

B - REAR AXLE FRONT MOUNTING

This is the main rear reference point for setting the trim level.

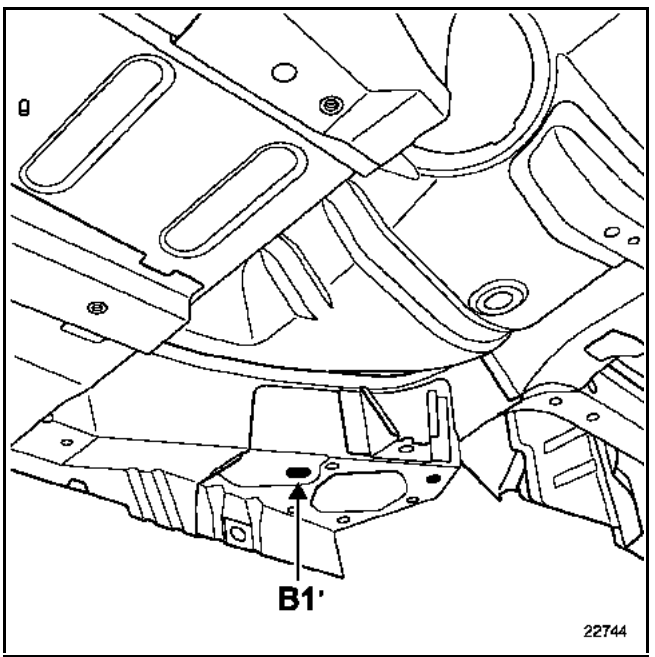

1 - Rear mechanical components removed

The bracket bears on the underside of the rear subframe assembly mounting unit, centred in the axle-assembly pilot hole.

If replacing the complete rear side member or the rear floor unit, this reference point is replaced by point (G), located on the front side member, point (B) being used to position the replaced component.

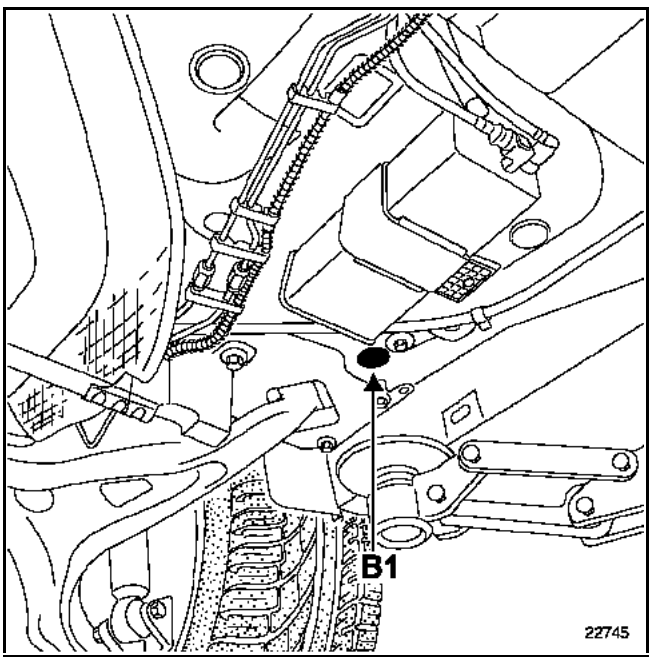

2 - Rear mechanism in place

GETtheMANUALS.org

2. ADDITIONAL REFERENCE POINTS FOR SETTING VEHICLETRIM LEVEL

These are the provisional reference points which are used when the principle reference points have been affected by the impact.

These points allow additional vehicle support to the main reference point on the impact side, but allow only a roughly accurate vehicle alignment.

IMPORTANT NOTE: These reference points should only be used in the cases mentioned above. They are not required when both the main reference points (points A and B) are correct.

This additional reference function may also be filled by the front side member ends check points for a rear impact, and vice-versa.

LEADER PIN UNDER FRONT FLOOR (front side member - central section)

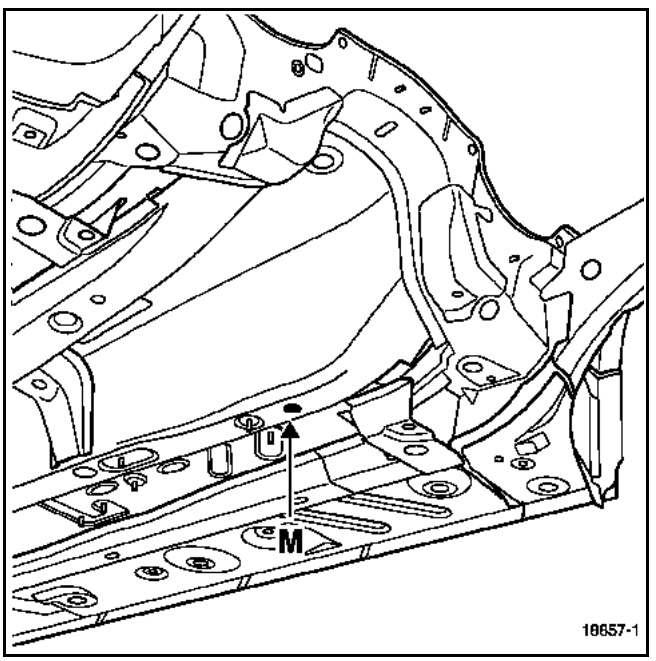

The point (M) can also be used to position the replacement part.

G. REAR END OF FRONT SIDE MEMBER

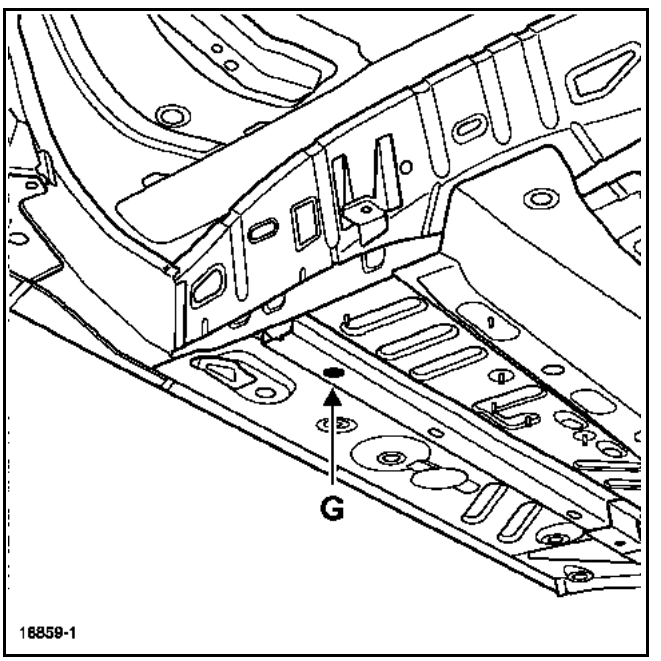

This point is also used as a positioning reference when replacing a rear section of the front side member.

GETtheMANUALS.org

3. REFERENCE POINTS FOR POSITIONING REPLACED PARTS

C - FRONT SUB-FRAME FRONT MOUNTING

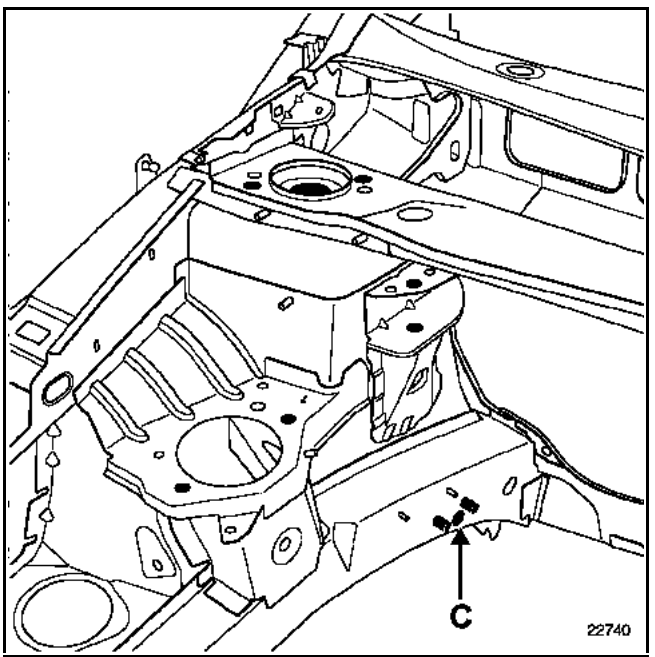

1 - Front mechanical components removed

The bracket rests under locating studs (1) for the front part of the subframe and can be fixed in the subframe attachment hole.

It is used when replacing:
– a partial or complete front side member,
– a half unit.

F - FRONT SHOCK ABSORBER UPPER MOUNTING

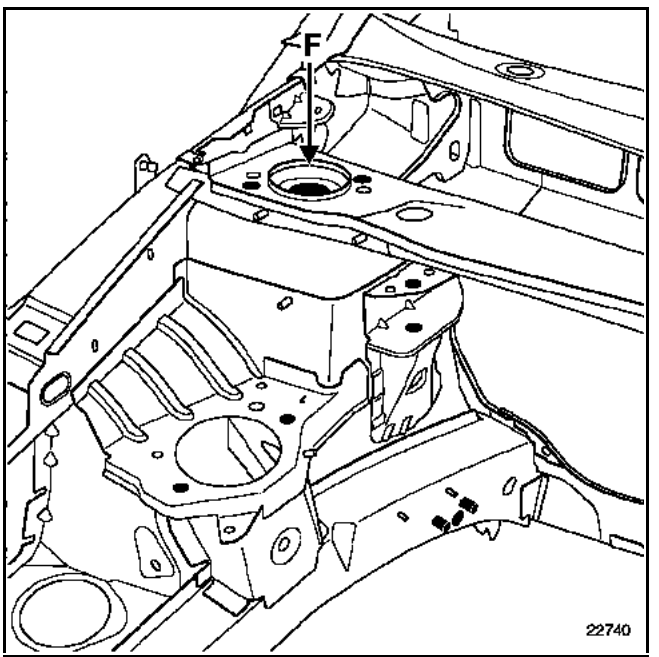

The bracket rests under the shock absorber cup and is centred in the shock absorber mounting holes.

It is used when replacing:
– a wheel arch,
– a front half unit.

It is also used when straightening.

GETtheMANUALS.org

E. REAR SHOCK ABSORBER MOUNTING

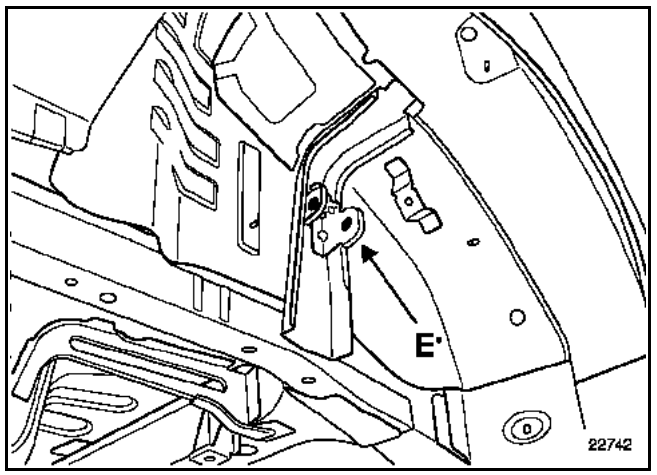

The bracket is centred and attached inside the shock absorber shaft.

It is used when replacing the inner rear wheel arch.

P. ENGINE MOUNTING

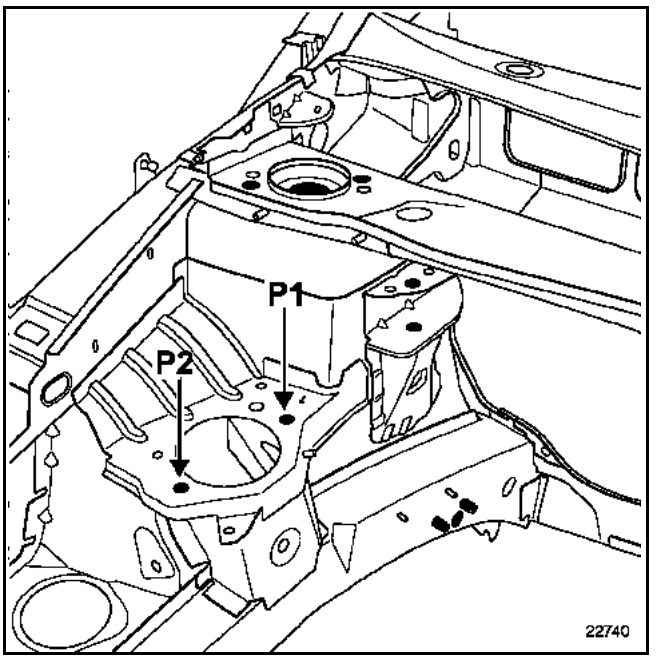

The bracket is positioned from above the engine mounting and is centred in the mounting holes of the pad.

It should be used with the mechanical components removed to replace a front half unit.

GETtheMANUALS.org

Q - GEARBOX MOUNTING

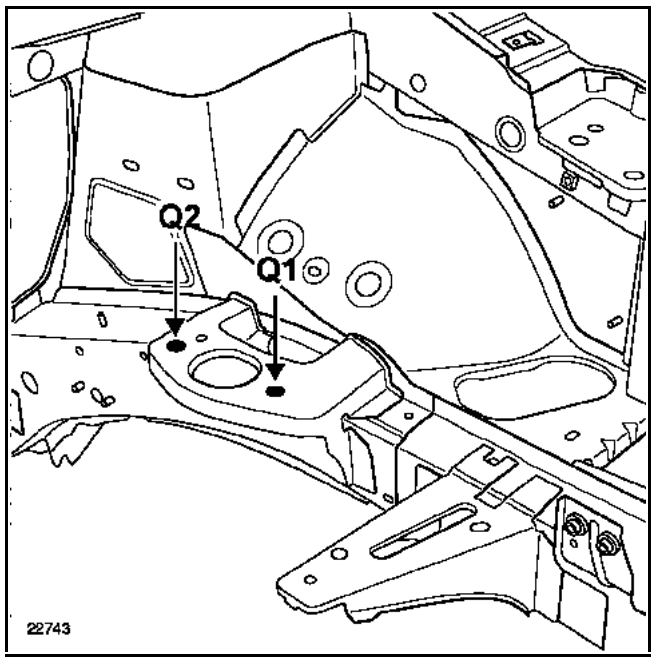

The bracket is positioned from below the gearbox, centred in the mounting holes of the shoe.

It should be used with the mechanical components removed to replace a front half unit.

R - ENGINE TIE-ROD MOUNTING

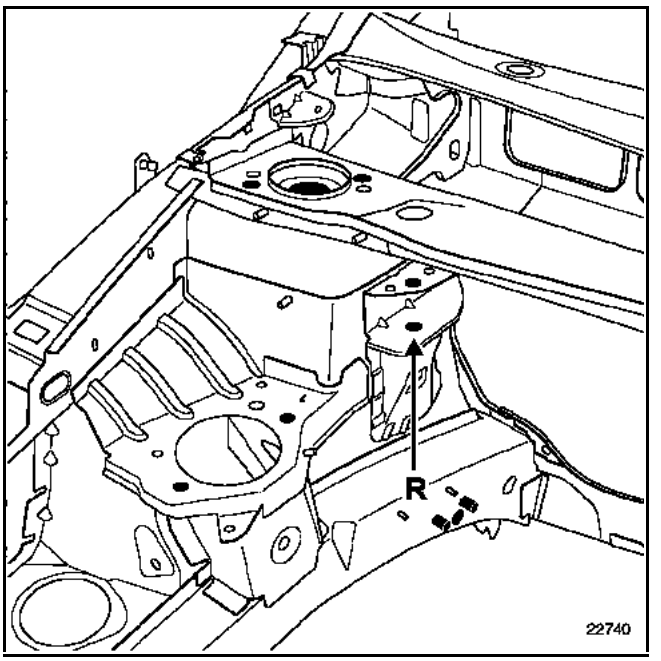

The bracket is placed in the tie-rod fork, and is fixed in place of the latter.

It is used for setting up the geometrical reference for the tie-rod fork.

GETtheMANUALS.org

J - REAR SIDE MEMBER END

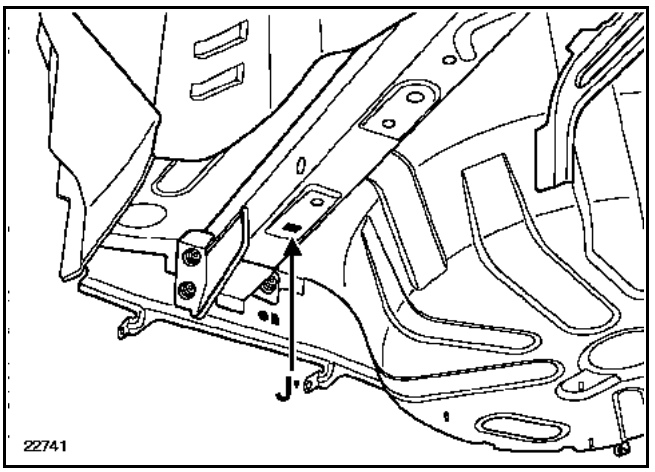

The bracket rests under the side member and is centred in the pilot hole.

it is used with the mechanical parts in place:
– for realigning the side member.

It is also used with the mechanical parts removed, in the same conditions, to replace the side member.

L - REAR END CROSS MEMBER

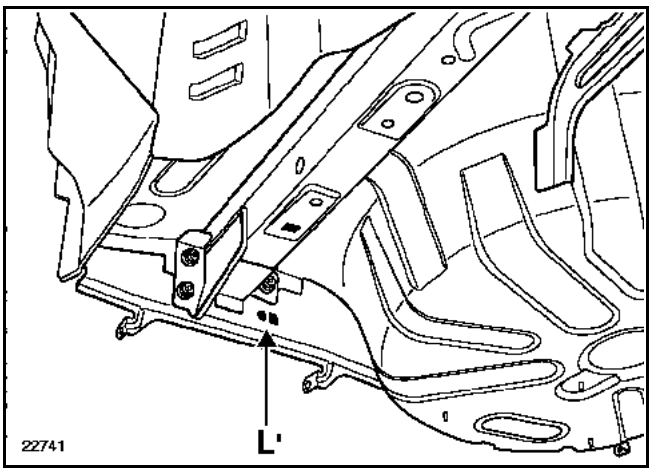

The bracket bears vertically against the rear end cross member, then is centred in the stamped area for securing the towing connection.

It is used for replacing the whole rear end, with or without mechanical units.

GETtheMANUALS.org

CELETTE

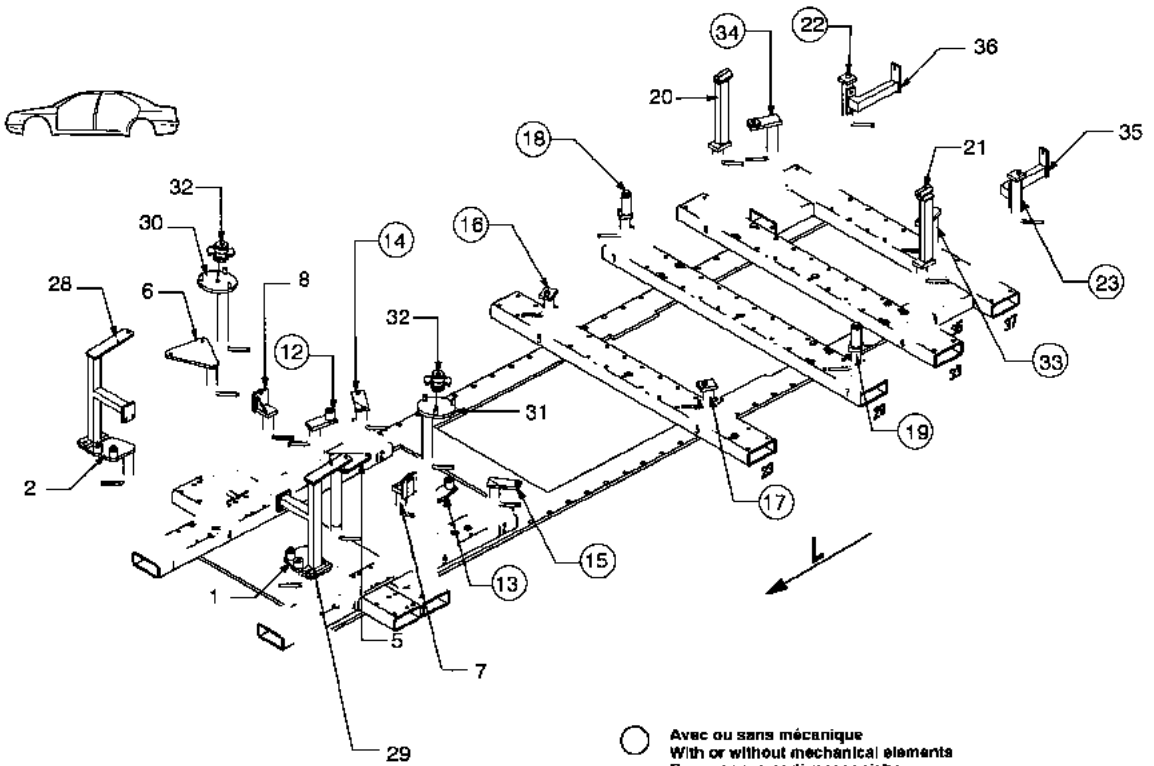

○ Avec ou sans mécanique
With or without mechanical elements
Con o senza parti meccaniche
Mit oder ohne Aggregate
Con ó sin mecanica desmontada

RENAULT

864.310		
21 Kg	19.10.2001	427-D 25J

Fiche 05B-1

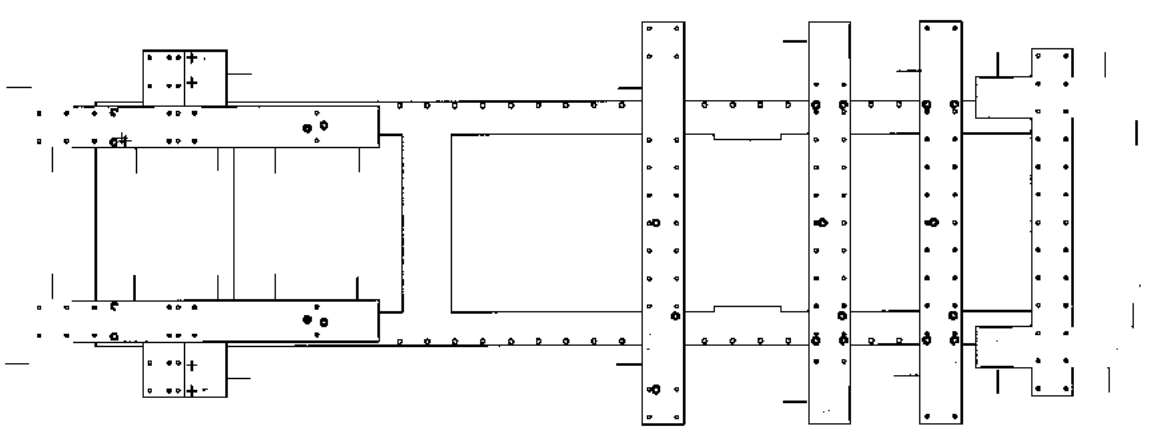

1 2 3 4 5 6 7 8 9 10 11 12 13 14 15 16 17 18 19 20 21 22 23 24 25 26 27 28 29 30 31 32 33 34 35 36 37 38 39

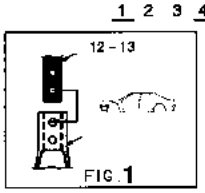

FIG. 1

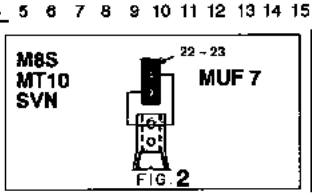

FIG. 2

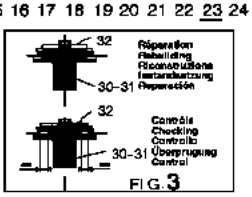

FIG. 3

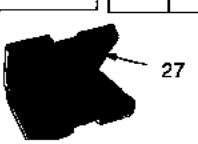

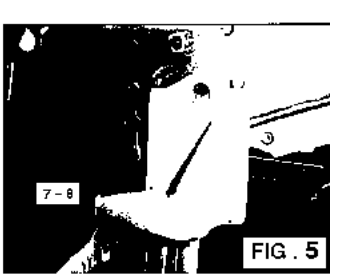

FIG. 5

Fiche 05B-2

GETtheMANUALS.org

Blackhawk Instruction Card

1B

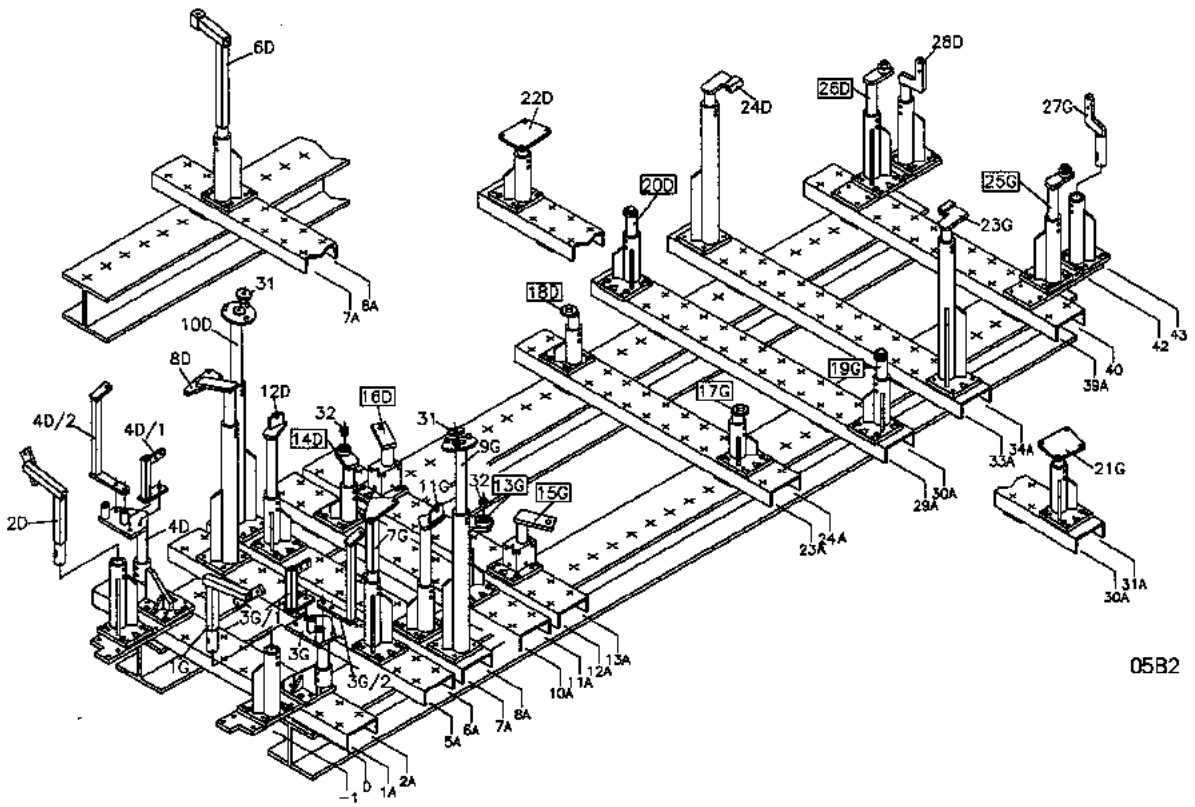

AVEC MECANIQUE/WITH MECHANICS/MIT MECHANIK/CON MECCANICA

3B

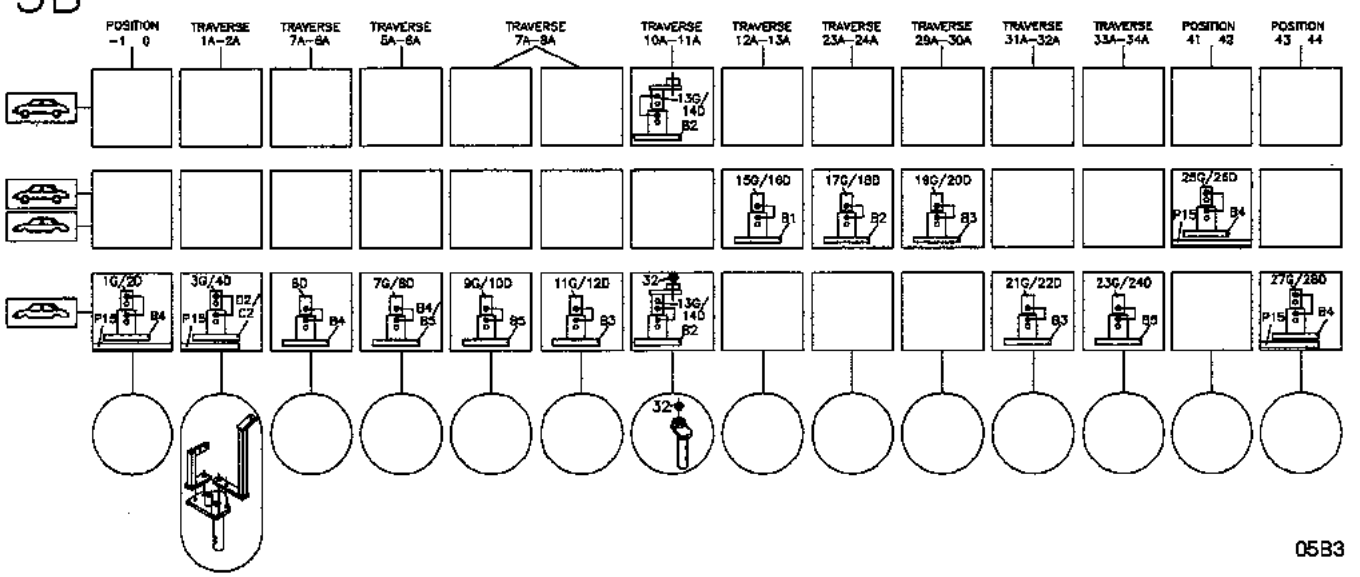

GETtheMANUALS.org

BLACKHAWK

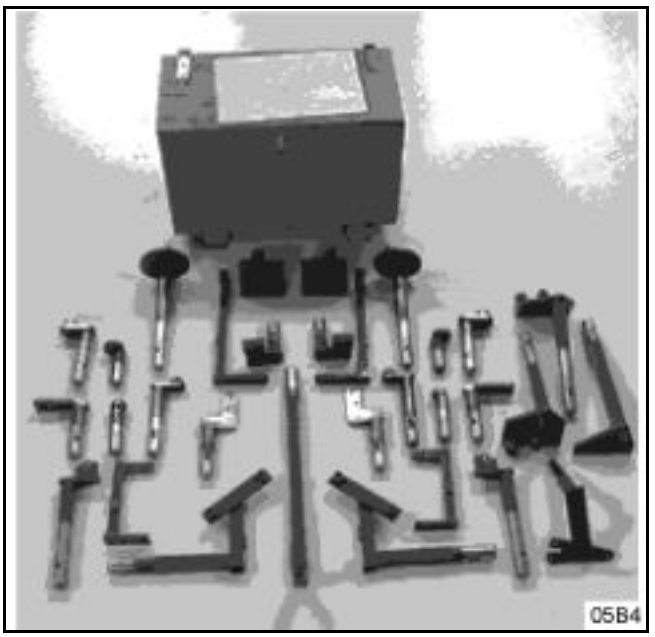

Special heads for **MS System**

Order from: BLACKHAWK
Centre Eurofret
Rue Rheinfeld
67100 STRASBOURG (France)

Supplier's part number: **REN 88 701**

supplements standard assembly **REN 88 700**

CELETTE

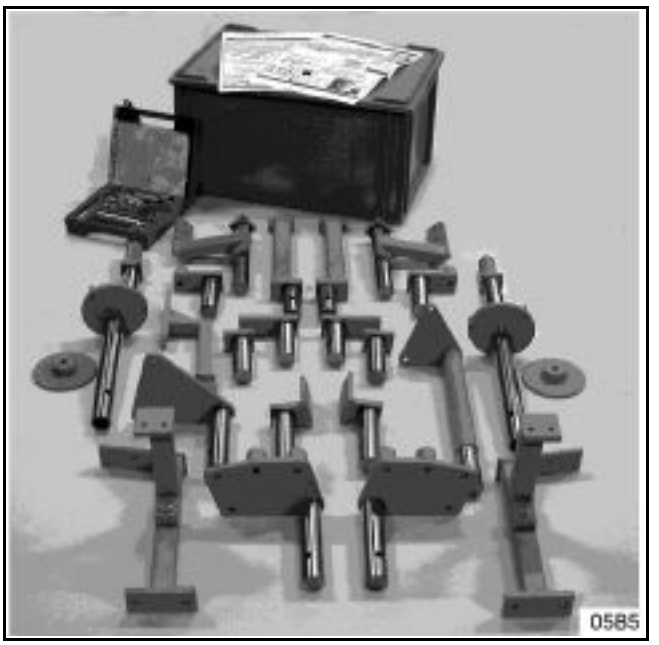

Special heads for **MZ System**

Order from: CELETTE S.A.
B.P.9
38026 VIENNE (France)

Supplier's part number: 864.309

supplements standard assembly: **864.300**

Complete assembly for LAGUNA II AND VEL SATIS: 864.310

GETtheMANUALS.org

REMOVAL OF SEAT TRIM

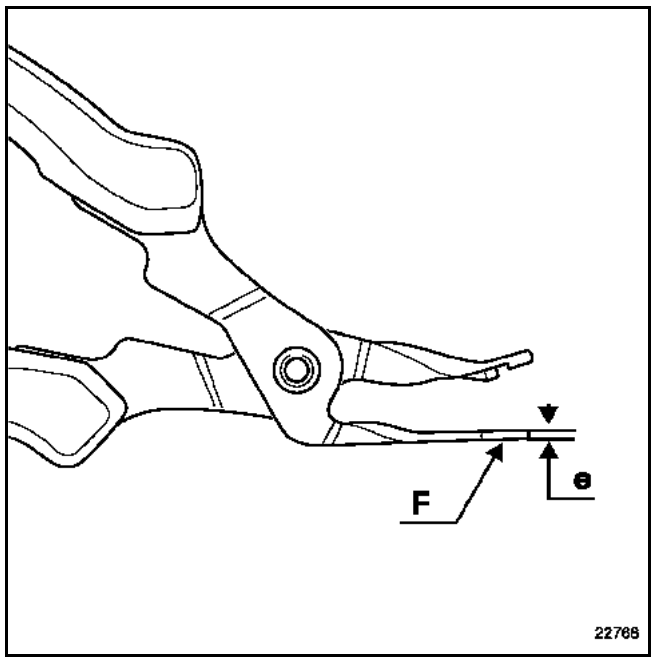

Pliers for zip fastener **Car. 1558**

IMPORTANT: to use correctly pliers **Car. 1558** on this vehicle, the thickness of the flat tip must be reduced to **th. = 1.5 mm**. To achieve this, grind the outer surface (F) of the tip.

IMPORTANT: above all, do not grind the internal bearing face of the tip, since that would affect operation of the pliers.

REMOVING THE WINDSCREEN

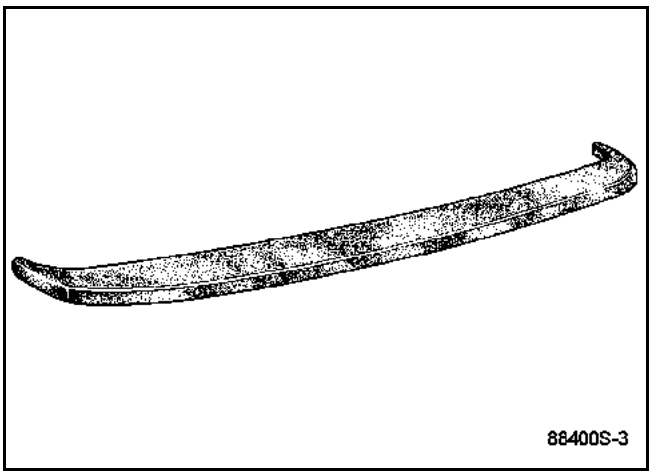

Dashboard protector **Car. 1640**

DECRIMPING OF DOOR PANELS

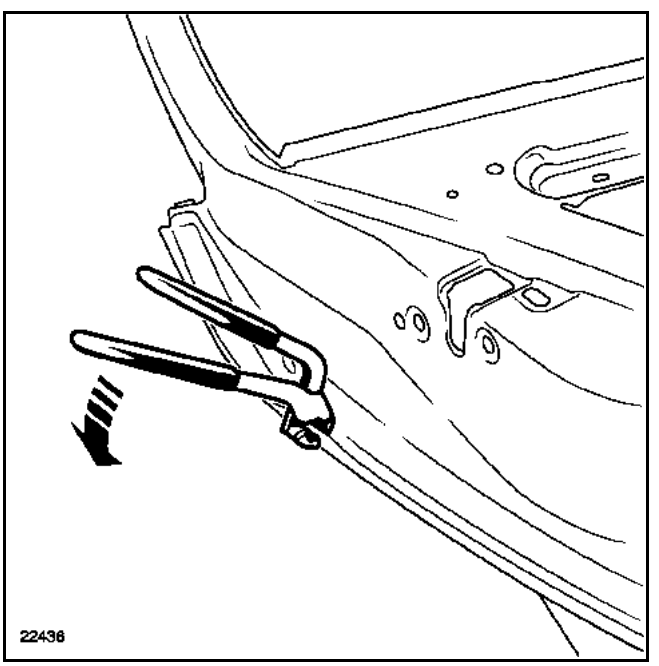

Decrimping pliers **Car. 1657**

GETtheMANUALS.org

VEL SATIS

4 Panelwork

40A GENERAL INFORMATION

41A FRONT LOWER STRUCTURE

41B CENTRAL LOWER STRUCTURE

41C SIDE LOWER STRUCTURE

41D REAR LOWER STRUCTURE

42A FRONT UPPER STRUCTURE

43A SIDE UPPER STRUCTURE

44A REAR UPPER STRUCTURE

45A TOP OF BODY

47A SIDE OPENING ELEMENTS

48A NON-SIDE OPENING ELEMENTS

BJ0E - BJ0J - BJ0K - BJ0M - BJ0P - BJ0V

77 11 311 140 **Edition 2 - DECEMBER 2001** **Edition Anglaise**

"The repair methods given by the manufacturer in this document are based on the technical specifications current when it was prepared.

The methods may be modified as a result of changes introduced by the manufacturer in the production of the various component units and accessories from which his vehicles are constructed."

All copyrights reserved by Renault.

Copying or translating, in part or in full, of this document or use of the service part reference numbering system is forbidden without the prior written authority of Renault.

© RENAULT 2001

GETtheMANUALS.org

Panelwork

Contents

Page

40A GENERAL INFORMATION

A	Procedure symbols	40A-1
B	Key for icons and symbols	40A-9
C	Description of parts	40A-13
D	Electrical and electronic layout	40A-19
E	Panel gaps	40A-24
F	Impact fault finding	40A-30
G	Sub-frame dimensions	40A-33
H	Rebuilding of sub-frame	40A-35

41A FRONT LOWER STRUCTURE

A	Front end lower cross member	41A-1
B	Radiator mounting cross member	41A-2
C	Front end cross member mounting stiffener	41A-3
D	Front side member closure panel, front section	41A-4
E	Front end side cross member	41A-6
F	Front panel mounting bracket	41A-7
G	Battery tray mounting	41A-8
H	Front side member	41A-9
I	Front half-unit	41A-16
J	Front sub-frame rear mounting unit	41A-17
K	Front sub-frame rear mounting unit reinforcement	41A-19
L	Front side member, central section	41A-21
M	Front side member, rear section	41A-22

41B CENTRAL LOWER STRUCTURE

A	Centre floor, side section	41B-1
B	Centre floor front side cross member	41B-8
C	Centre floor stiffener	41B-10
D	Centre floor front cross member	41B-13
E	Tunnel	41B-15
F	Front cross member under front seat	41B-16
G	Rear cross member under front seat	41B-19

Page

41C SIDE LOWER STRUCTURE

A	Sill panel	41C-1
B	Sill panel reinforcement	41C-5
C	Sill panel closure panel	41C-7

41D REAR LOWER STRUCTURE

A	Rear floor rear section	41D-1
B	Rear side member, rear section	41D-5
C	Rear side member	41D-6
D	Rear side member closure panel, front section	41D-7
E	Rear floor front section	41D-9
F	Rear floor front cross member	41D-13
G	Rear floor front cross member, closure panel	41D-16
H	Rear floor centre cross member	41D-18
I	Rear floor unit	41D-19

42A FRONT UPPER STRUCTURE

A	Front wing	42A-1
B	Front wing lower mounting bracket	42A-4
C	Front upper cross member	42A-5
D	Headlight mounting panels	42A-6
E	Scuttle side panel	42A-7
F	Scuttle side panel upper reinforcement	42A-10
G	Scuttle side panel upper rear reinforcement	42A-12
H	Front wheel arch front section	42A-13
I	Front wheel arch	42A-16
J	Front wheel arch rear section	42A-18
K	Heating bulkhead	42A-20
L	Steering column mounting	42A-22
M	Steering column lower mounting	42A-23
N	Side bulkhead	42A-24
O	Pedal assembly support plate	42A-25

GETtheMANUALS.org

Page

43A SIDE UPPER STRUCTURE

A	A-pillar	43A-1
B	A-pillar reinforcement	43A-6
C	Windscreen pillar lining reinforcement	43A-7
D	Windscreen pillar lining	43A-9
E	B-pillar	43A-11
F	B-pillar reinforcement	43A-14
G	B-pillar lining	43A-16
H	Body top	43A-17
I	Body top lining	43A-19
J	Body side front section	43A-20

44A REAR UPPER STRUCTURE

A	Rear wing panel	44A-1
B	Rear wing panel extension	44A-6
C	Rear wing panel lower rain channel	44A-7
D	Rear wing panel upper rain channel	44A-8
E	Outer rear wheel arch	44A-9
F	Inner rear wheel arch	44A-13
G	Quarter panel reinforcement	44A-15
H	Quarter panel lining	44A-17
I	Rear light mounting	44A-18
J	Rear end panel assembly	44A-19
K	Rear end panel	44A-21
L	Rear end panel side lining	44A-23
M	Rear bumper cross member mounting	44A-24

Page

45A TOP OF BODY

A	Roof	45A-1
B	Roof front cross member	45A-3
C	Roof central cross member	45A-4
D	Roof panel arch	45A-5
E	Roof rear cross member	45A-6
F	Roof rear cross member lining	45A-7

47A SIDE OPENING ELEMENTS

A	Front side door	47A-1
B	Front side door panel	47A-5
C	Rear side door	47A-7
D	Rear side door panel	47A-10
E	Fuel filler flap	47A-12

48A NON-SIDE OPENING ELEMENTS

A	Bonnet	48A-1
B	Tailgate	48A-4

GETtheMANUALS.org

Below you will find detailed explanations required to understand the procedures.

These change and are updated as and when necessary from edition to edition.

This means that the most recently published Workshop Repair Manual should be used as reference.

1. Basic rules for the replacement of structural components

As a general rule, when a welded bodywork component is replaced, the repair must be identical to the original both in terms of the number of welds and the type of welding used, for reasons of appearance and safety.

If this rule cannot be followed fully during repair for practical reasons, the replacement solutions will be shown in the repair procedures.

These solutions ensure that the repairs are performed correctly and release the repairer from liability.

Therefore, you will only find particular instances where spot welds differ from the original indicated in the procedures, electrical resistance spot welds will no longer be demonstrated in the diagrams.

Most frequently encountered cases when replacing an electrical resistance weld:

1 Plug welding
2 Bead
3 Gluing
4 Riveting

In some cases, the following will be indicated:
– the tools and equipment used for the operations,
– the cross sections of the specific panel overlaps requiring an explanation,
– the dimensions for positioning certain components,
– the location of the cutting lines for partial replacements,
– the location of the gluing areas specific to the repair.

When a part is symmetrical (left and right sides are identical), only one side will be dealt with in the procedure (eg.: partial replacement of the rear floor rear section).

This means that the operations for the other side are the same (number of spot welds, etc), unless specific indications to the contrary are given.

This applies to both left and right-hand drive versions.

In the document, the drawings illustrate the replacement of the various parts as clearly as possibly following a typical impact described in each introduction.

The diagram should illustrate the part to be replaced without the neighbouring components as if they have already been removed.

However, some diagrams may not follow this rule in order to better depict the part in its location.

The structural repair procedures are carried out using uncoated steel bodywork panels.

The original mastics are not illustrated.

Special notes for replacements made with cuts:

Generally, the areas to be cut are described in the procedures as guidelines. They can be adapted according to the damage sustained through impacts if the main safety regulations detailed in the General Information section of the bodywork guide are observed.

When the position of the cut is specified in the procedure, it must be followed.

IMPORTANT:
The codified times for operations (TM) are specified according to the position of the cuts illustrated in the manual.
This means that if the operator chooses to cut a different area, the time given to do the job will no longer correspond.

GETtheMANUALS.org

2. Meaning of symbols explained

You will find below several representative examples of how to replace parts.

All explanations are written in italics.

EXAMPLE No.1: Front wheel arch front section (Section 42A-H):

The replacement of this part is a complementary operation to the replacement of the scuttle side panel for a side impact.

This implies that there is a basic operation, in which the preliminary operations will be covered, associated with the replacement of this part.

From which the two following paragraphs are taken:

In the procedure described below, you will only find the descriptions and the joints which are specific to the part concerned.

The information on the additional parts will be dealt with in the respective sections (refer to contents).

The "supplementary" parts are those affected by the impact, which are assumed to have been removed already.

COMPOSITION OF THE REPLACEMENT PART

Part supplied on its own.

Knowledge of the composition of the replacement part allows work to be carried out before receiving the part and ensures that the most suitable part is ordered.

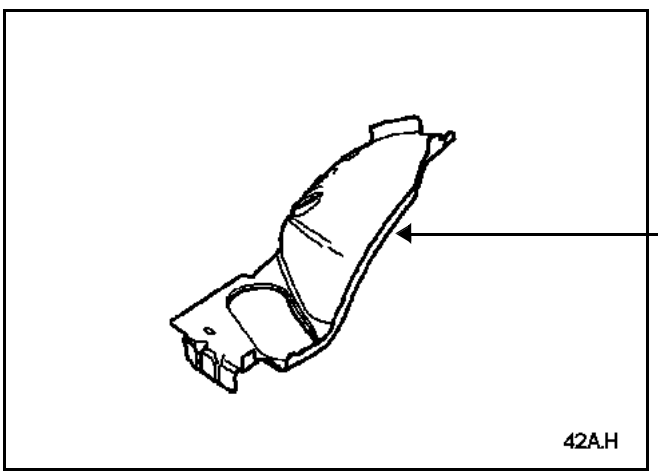

The image used in the introduction is that used in the Replacement Parts Catalogue.

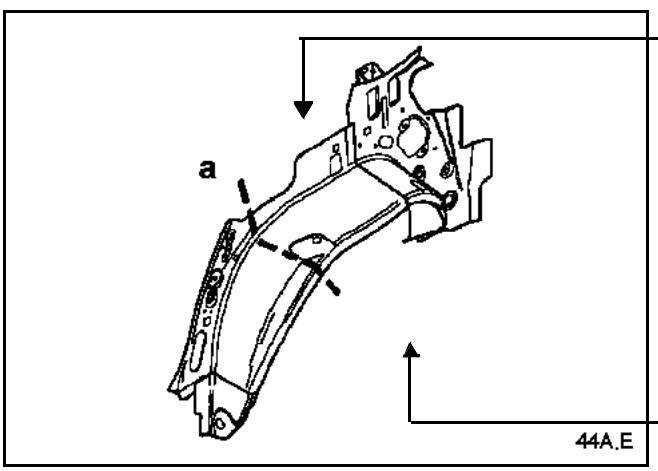

A simplified dotted line on the diagram indicates the possibility of a partial replacement (Outer wheel arch 44A-E).
This symbolisation is repeated in the exploded views of the parts in the Repair Times section.
This cutting line is always accurately detailed in the procedure, and it is important to refer to this as it indicates exactly the position of the cut and the method for joining.
(see EXAMPLE No. 4 described below).

These cuts are marked by a lower case letter.

GETtheMANUALS.org

PARTS CONCERNED (thickness in mm):

The list of PARTS CONCERNED refers only to the parts marked in the diagrams.

1	Scuttle side panel	**1.5/2.5**
2	Windscreen pillar lining	1
3	Windscreen aperture lower cross member	0.9
4	Sill panel closure panel	1.2
5	Front wheel arch rear section	1.2
6	Windscreen aperture lower cross member reinforcement	0.9

When two panel thicknesses are shown for the same part, this means that this part consists of two panels which were originally butt welded. Thicknesses are shown starting from the outer end of the part going towards the passenger compartment of the vehicle (direction of the impact).

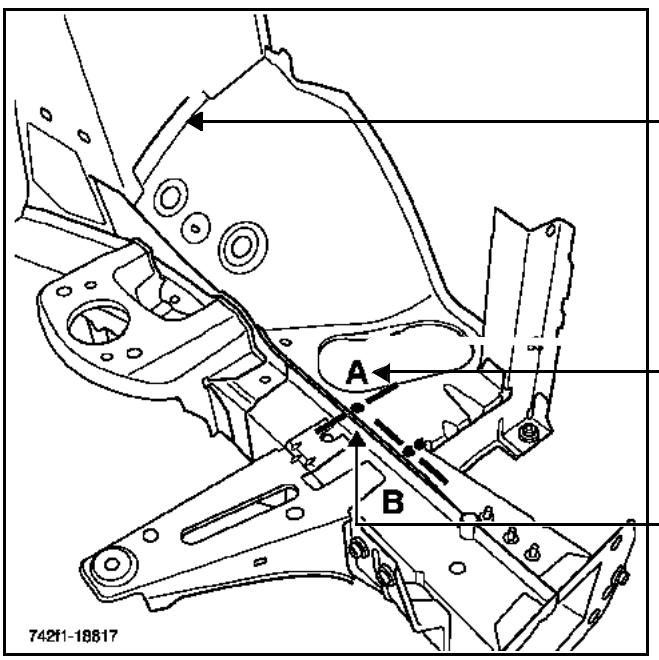

The join between the wheel arch and the shock absorber turret is not dealt with because it can be made as originally.

This letter designates the diagram which corresponds to the section (this is repeated in the upper left-hand corner of each diagram).

The dashed line shows the centre line of the sections.
The dashed line shows the exact placement for the join.

This letter designates the diagram of the section which corresponds to the drawing (this is repeated in each drawing).

This arrow indicates the location and direction of operations to be carried out (this is repeated under each section followed by one or more icon(s) signifying an exact operation).

This number corresponds to the number of the part in the list of parts involved.

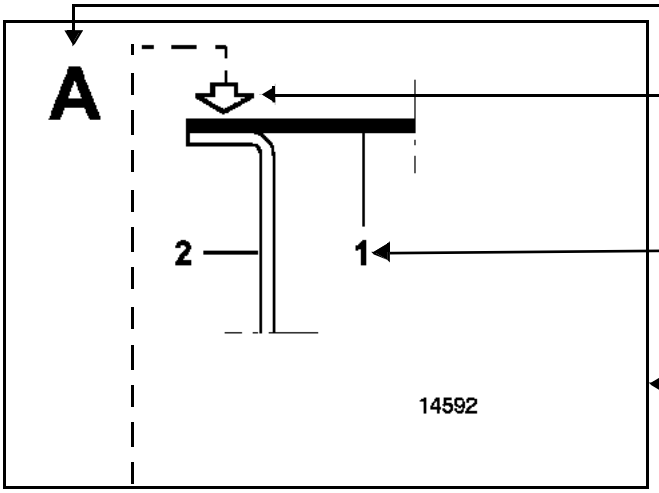

The use of sections allows for the necessary precision for panel butt welding joints which are complex or different from the original.

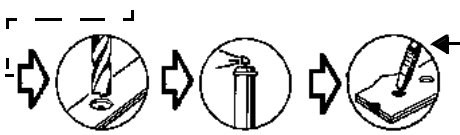

The symbol represents the specific operation to be performed and the type of tool (Section 40A-B Key for icons and symbols).

x 3

"X3" specifies the number of spot welds required for the attachment concerned.
Here, resistance spot welds are replaced with plug welds.

GETtheMANUALS.org

B

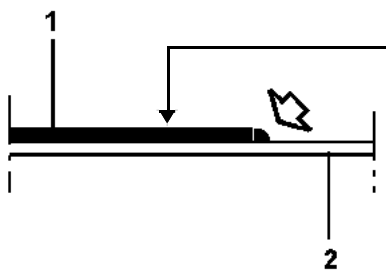

The part shown in black is the one removed during the operation.
The other panels shown in white represent the parts remaining in position on the vehicle.

"L25" specifies the length in millimetres of the bead to be welded for the relevant connection.

If several welds are required, the number will appear before the L25, eg.: X4 L25 means that there are four 25 mm lengths of beading required.

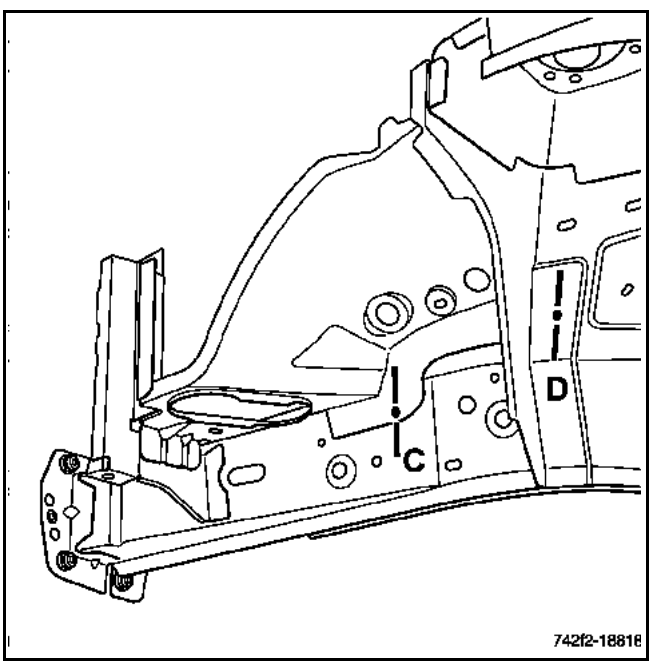

D

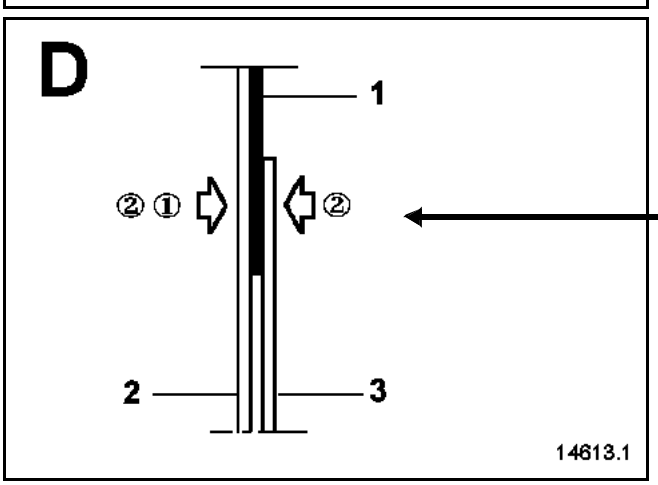

This special numbering system indicates the order in which the various tasks must be carried out
① Drill
② Protect and plug the two sides

∅ 10 indicates the diameter in millimetres of the hole to be drilled for the operation.

GETtheMANUALS.org

EXAMPLE No.2: Scuttle side panel upper rear reinforcement (Section 42A-G).

NOTE:
This operation presents no particular difficulties.

Where spot welds cannot be made with the spot welder, they can be replaced by plug welds.

For your information, you will find one or more diagrams of the part in the procedure either on the vehicle or removed from it.

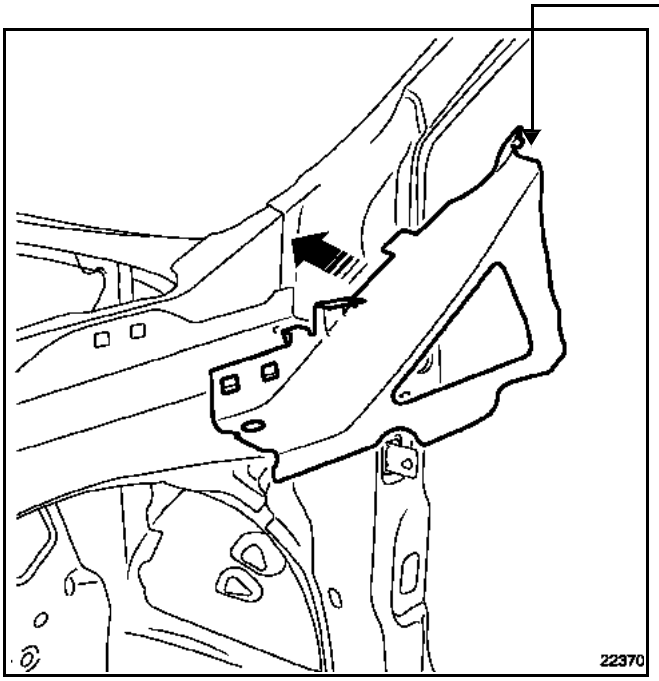

Specific case:
When the original spot welds are replaced with plug welds and the operation presents no particular problems in respect of the Basic rules for replacing structural components (see paragraph 1).
Nothing is detailed in the procedure.

If this is the case, one or more diagrams of the part in position on the vehicle or off the vehicle will be provided for information purposes.

GETtheMANUALS.org

EXAMPLE No.3: Outer wheel arch (Section 44A-E)

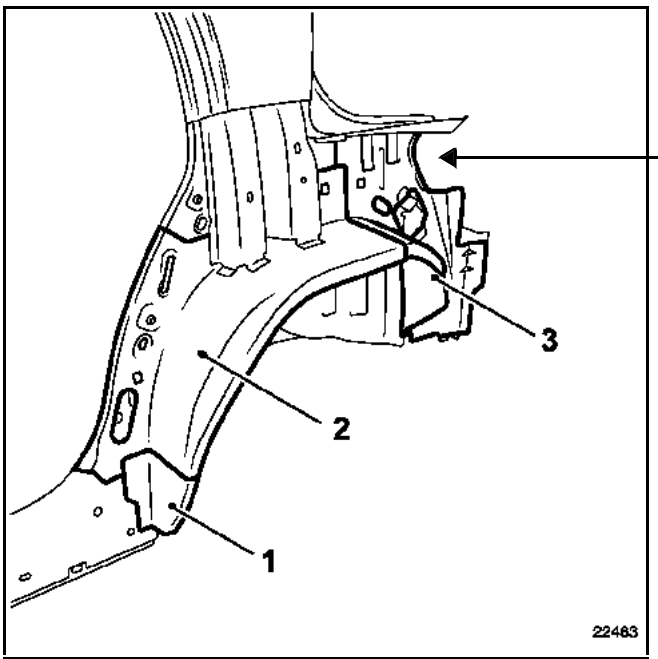

The highlighted part shown in position is also used when the replacement procedure is not particularly difficult.

This representation allows the part to be seen in position on the bodywork with hidden areas and ridges visible.
Here, it can be seen that the outer wheel arch is supplied by the Parts Store assembled in three sections.

The outer rear wheel arch consists of three sections:
Lower component (**1**)
Front section (**2**)
Rear section (**3**)

NOTE:
Depending on the level of impact, it is possible to replace the damaged parts only.

It is an example of partial replacement by unpicking (without cutting).

This type of operation requires that the components to be replaced are unpicked from the outer rear wheel arch assembly supplied by the Parts Store.

This process is used on Parts Store parts which are made up of several components.

GETtheMANUALS.org

EXAMPLE No.4: Outer wheel arch (Section 44A-E)

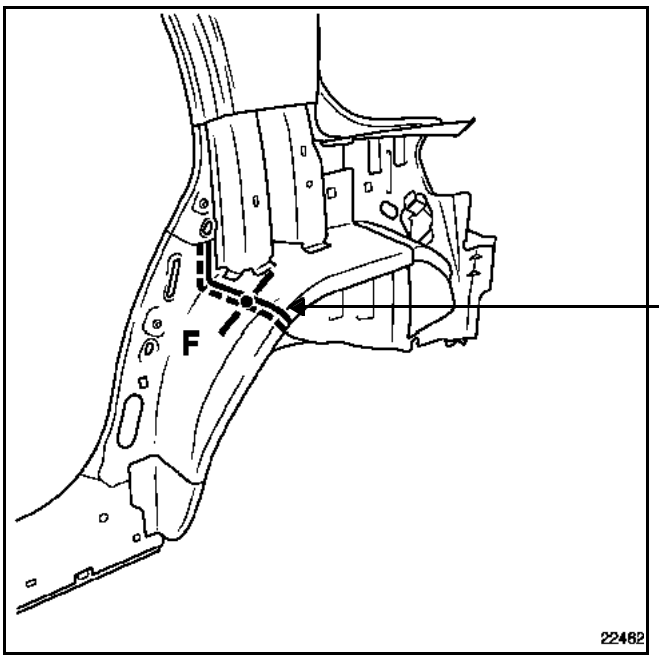

The symbol represents the area or the exact outline of the operation to be performed (see Section 40A-B Key for icons and symbols).

The icon corresponds with the figure to indicate the type of operation to be carried out at this point

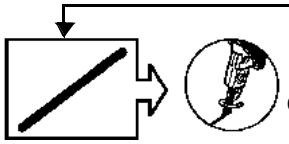
on the replacement part

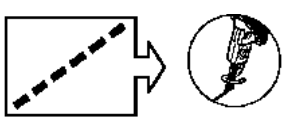
on the vehicle

This illustration shows the panel overlap for replacement by drilling and superposition.

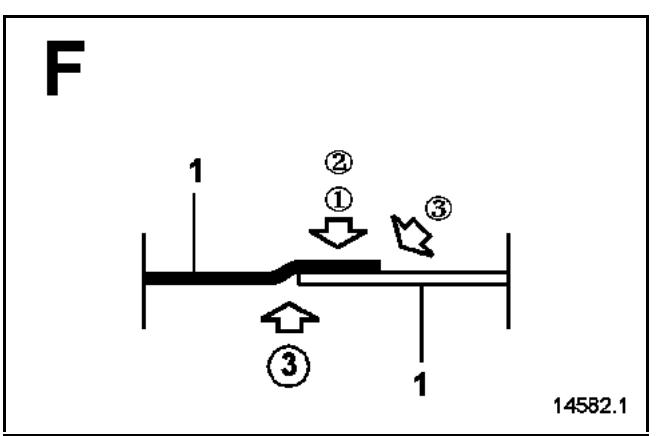

on the replacement part

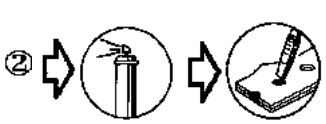

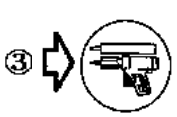

GETtheMANUALS.org

NOTE:
The number of plug welds is not specified. It is essential to leave a gap of approximately **60 mm** between the spot welds, then after welding apply a mastic bead to the edge (operation ③) to ensure sealing and finish.

Use M.J.Pro type mastic (**part number: 77 11 172 676**)

A specified gap is given if the number of spot welds is not specified by the symbol.

The part numbers of the products or equipment are valid at the time the document is issued. They are liable to be changed in the event of further developments. These part numbers can be tracked by the product and equipment catalogue updates.

GETtheMANUALS.org

1. Symbols:

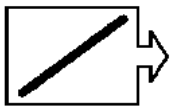	Usually represents a visible panel edge. The symbol may be followed by an action to be carried out along this line (eg.: cutting).
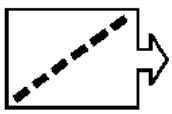	Usually represents a hidden panel edge. The symbol may be followed by an action to be carried out along this line (eg.: cutting).
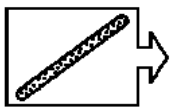	Represents a bead of glue or mastic. The symbol may be followed by an action to be carried out along this line (eg.: extrusion).
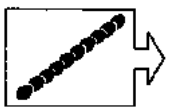	Usually represents an edge to edge cut or a simple bead of chain weld.

GETtheMANUALS.org

2. Symbols:

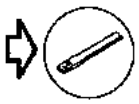	Cut with chisel. Open out with a chisel. Flat chisel.
	Cut with a saw. Pneumatic power hacksaw.
	Unpick the spot welds. Hardened steel bit. Speed of rotation 800 to 1000 rpm.
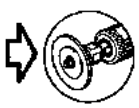	Grind back the beading or spot welds (grinding discs). Cut (disc saw). Pneumatic straight grinder. Maximum speed 20 000 rpm.
	Mill the bead or spot welds. Pneumatic straight grinder. Maximum speed 20 000 rpm.
	Drill ≤ ∅ 8 mm. Steel drill bit. Speed of rotation 800 to 1000 rpm.
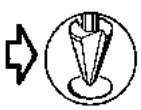	Drill ≥ ∅ 8 mm. Tapered drill bit. Speed of rotation 800 to 1000 rpm.
	Decrimping. Decrimping pliers Car. 1657.
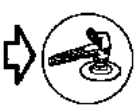	Grind the bead or spot welds. Surface finish the bead or spot welds. Pneumatic angle grinder.

GETtheMANUALS.org

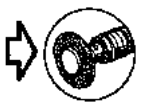	Clean the mating faces before welding. Pneumatic straight grinder. Speed of rotation 2 500 rpm.
	Detach the spot welds. Pincers.
	Peel away the areas of mastic or adhesive strips. Heat gun.
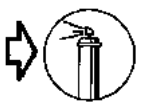	Protect the mating faces before welding. Aluminium-based aerosol.
	Add a bead to the mating faces. Manual or pneumatic spray gun. Mono or bi-component filling or structure mastic.
	Apply weldable mastic (electrical conductor) between the two panels to be spot welded. Spray gun. Mono-component bonding mastic.
	Extrude a mastic bead. Manual or pneumatic spray gun. Monocomponent filling or sealing mastic.
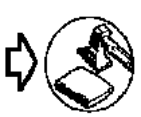	Planish a component. Crimp an outer door panel. Hammer and stake.
	Braze or unbraze the weld. Oxyacetylene equipment.
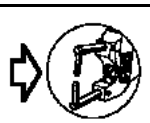	Apply electrical resistance spot welds. Pneumatic spot welder.
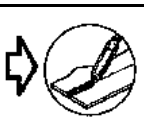	Chain weld or apply a bead of weld with MAG shielding gas. Semi-automatic welding station.
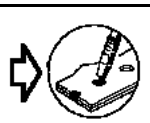	Plug weld with MAG protective gas. Semi-automatic welding station.
	Tin plate the surface finished area. Heat gun. Spatula + 33 % tin strip + tallow.
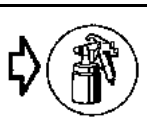	Spray a mastic. Spray gun. Bi-component anti-chipping and anti-corrosion mastic.

GETtheMANUALS.org

	Spray the hollow sections with wax. Spray gun.
	Safety symbol. Follow the advice indicated.

GETtheMANUALS.org

IMPORTANT:
This vehicle shares components with Laguna II, some diagrams in this document are taken from the Laguna II Workshop Repair Manual where the procedure is identical.

Three cases are taken into account:

① The part is identical to that on Laguna II, the procedure is the same for both vehicles.
② The part is slightly different to that on Laguna II, but the procedure is identical.
③ The part is specific to the vehicle, the procedure is specific.

For cases ① and ②, the diagrams are not exact representations of the actual vehicle, but do not affect the understanding of the procedure.

Only cases ① and ② will be indicated in the procedure introduction for each part concerned. When there is no indication in the introduction, this means that the part is new (case ③).

REMINDER:
All sections are to be found opposite each part, to make them easier to refer to more quickly.

GETtheMANUALS.org

LOWER STRUCTURE

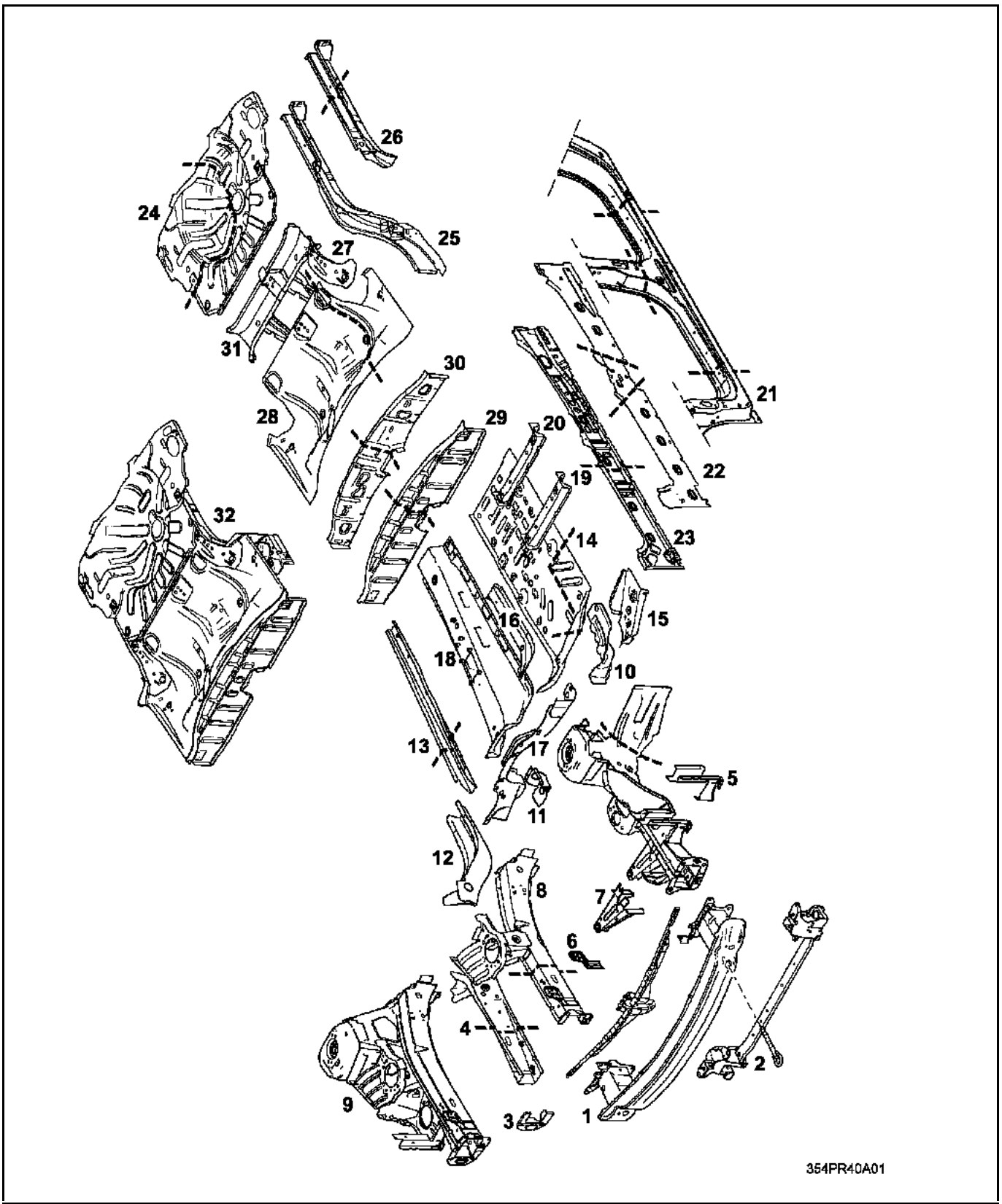

GETtheMANUALS.org

1 Front end lower cross member ① (**41A-A**)
2 Radiator mounting cross member ① (**41A-B**)
3 Front end cross member mounting stiffener ① (**41A-C**)
4 Front section of front side member closure panel ① (**41A-D**)
5 Front end side cross member ① (**41A-E**)
6 Front panel mounting bracket ① (**41A-F**)
7 Battery tray bracket ① (**41A-G**)
8 Front side member ① (**41A-H**)
9 Front half-unit ③ (**41A-I**)
10 Front sub-frame rear mounting unit ① (**41A-J**)
11 Sub-frame rear mounting unit reinforcement ① (**41A-K**)
12 Front side member, central section ① (**41A-L**)
13 Front side member rear section ① (**41A-M**)
14 Central floor, side section ① (**41B-A**)
15 Central floor front side cross member ① (**41B-B**)
16 Central floor stiffener ② (**41B-C**)
17 Centre floor front cross member ② (**41B-D**)
18 Tunnel ① (**41B-E**)
19 Front cross member under front seat ① (**41B-F**)
20 Rear cross member under front seat ① (**41B-G**)
21 Sill panel ② (**41C-A**)
22 Sill panel reinforcement ① (**41C-B**)
23 Inner sill panel ① (**41C-C**)
24 Rear floor rear section ② (**41D-A**)
25 Rear side member ② (**41D-B**)
26 Rear side member rear section ① (**41D-C**)
27 Front section of rear side member closure panel ① (**41D-D**)
28 Rear floor, front section ① (**41D-E**)
29 Rear floor front cross member ① (**41D-F**)
30 Rear floor front cross member closure panel ① (**41D-G**)
31 Centre cross member of rear floor ① (**41D-H**)
32 Rear floor unit ② (**41D-I**)

GETtheMANUALS.org

UPPER STRUCTURE

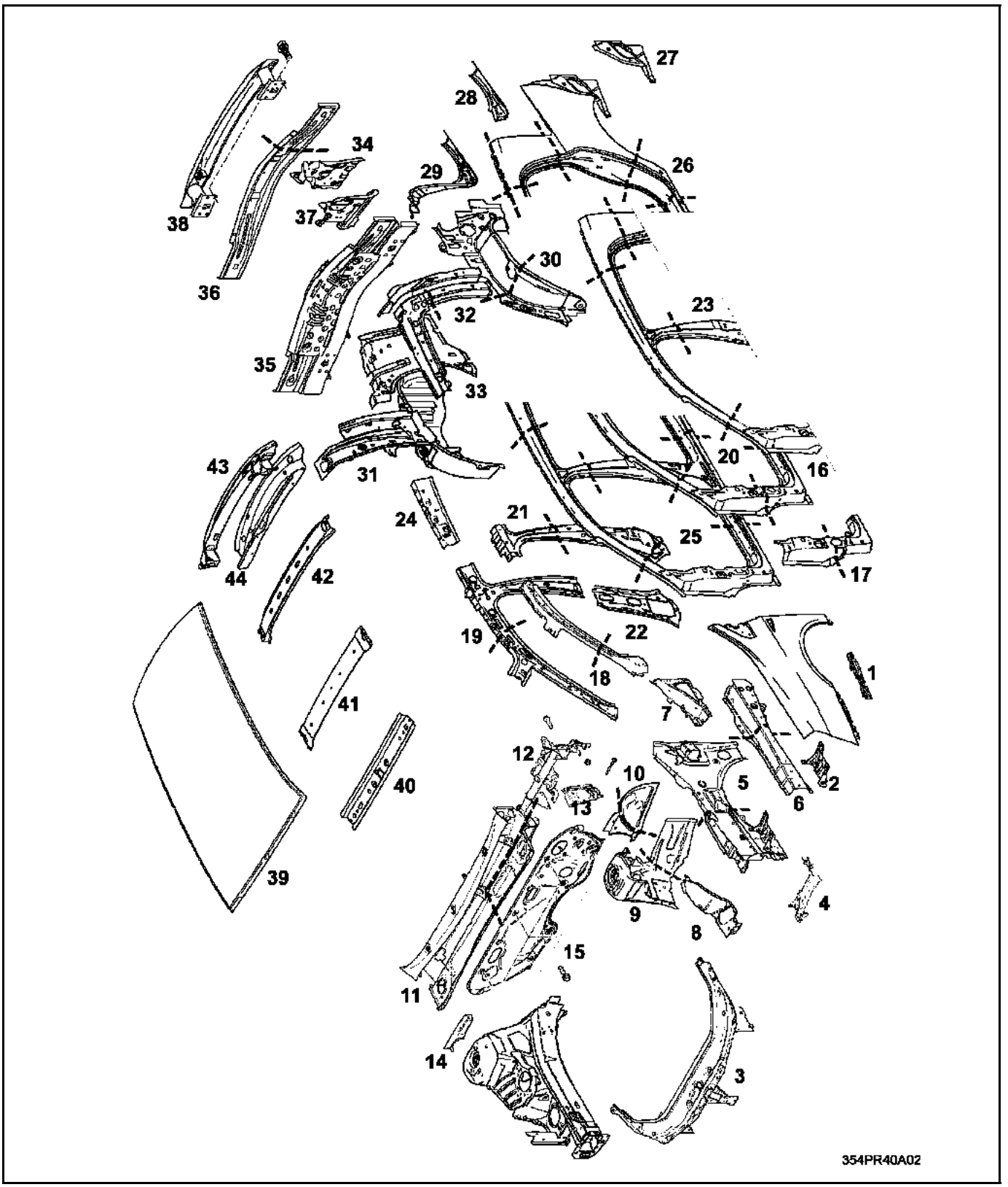

GETtheMANUALS.org

1 Front wing ③(**42A-A**)
2 Front wing lower mounting bracket ②(**42A-B**)
3 Front upper cross member ③(**42A-C**)
4 Headlight mounting panels ③(**42 A-D**)
5 Scuttle side panel ②(**42A-E**)
6 Scuttle side panel upper stiffener ③(**42A-F**)
7 Scuttle side panel upper rear stiffener ③(**42A-G**)
8 Front wheel arch, front section ①(**42A-H**)
9 Front wheel arch ②(**42A-I**)
10 Front wheel arch, rear section ①(**42A-J**)
11 Heating bulkhead ③(**42A-K**)
12 Steering column mounting ①(**42A-L**)
13 Steering column lower mounting ①(**42A-M**)
14 Side bulkhead ③(**42A-N**)
15 Pedal assembly support plate ②(**42A-O**)
16 A-pillar ③(**43A-A**)
17 A-pillar reinforcement ③(**43A-B**)
18 Windscreen pillar lining reinforcement ③(**43A-C**)
19 Windscreen pillar lining ③(**43A-D**)
20 B-pillar ②(**43A-E**)
21 B-pillar reinforcement ③(**43A-F**)
22 B-pillar lining ②(**43A-G**)
23 Body top ③(**43A-H**)
24 Body top lining ③(**43A-I**)
25 Body side front section ②(**43A-J**)
26 Rear wing panel ③(**44A-A**)
27 Rear wing panel extender ③(**44A-B**)
28 Rear wing panel lower rain channel ③(**44A-C**)
29 Rear wing panel upper rain channel ③(**44A-D**)
30 Outer rear wheel arch ③(**44A-E**)
31 Inner rear wheel arch ③(**44A-F**)
32 Quarter panel reinforcement ③(**44A-G**)
33 Quarter panel lining ③(**44A-H**)
34 Rear lights mounting ③(**44A-I**)
35 Rear end panel assembly ③(**44A-J**)
36 Rear end panel ③(**44A- K**)
37 Rear end panel side lining ③(**44A-L**)
38 Rear bumper mounting cross member ③(**44A-M**)
39 Roof ③(**45A-A**)
40 Roof front cross member ①(**45A-B**)
41 Roof central cross member ③(**45A-C**)
42 Roof panel arch ③(**45A-D**)
43 Roof rear cross member ③(**45A-E**)
44 Roof rear cross member lining ③(**45A-F**)

GETtheMANUALS.org

OPENING ELEMENTS LAYOUT

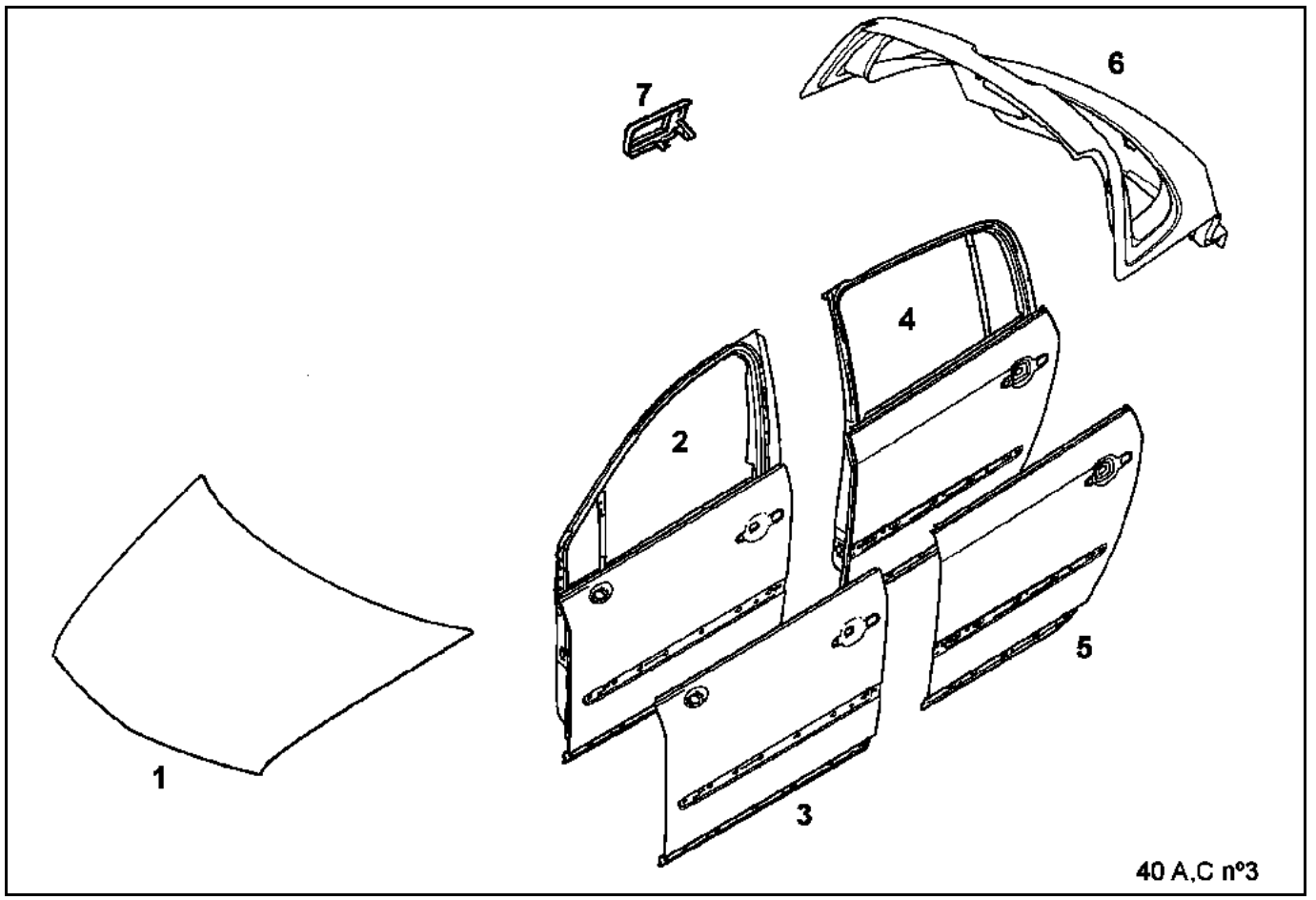

1 Bonnet ③(**48A-A**)
2 Front side door (**47A-A**) ③
3 Front side door panel ③(**47A-B**)
4 Rear side door (**47A-C**) ③
5 Rear side door panel (**47A-D**) ③
6 Tailgate (**48A-B**) ③
7 Fuel filler flap (**47A-E**) ③

GETtheMANUALS.org

LOCATION OF THE COMPUTERS IN THE VEHICLE

REMINDER

When welding, it is advisable to:
- **disconnect the battery,**
- **remove or disconnect the electrical components (computers, etc) which are near to the repair zone and which may be damaged by the heat and flow of current.**

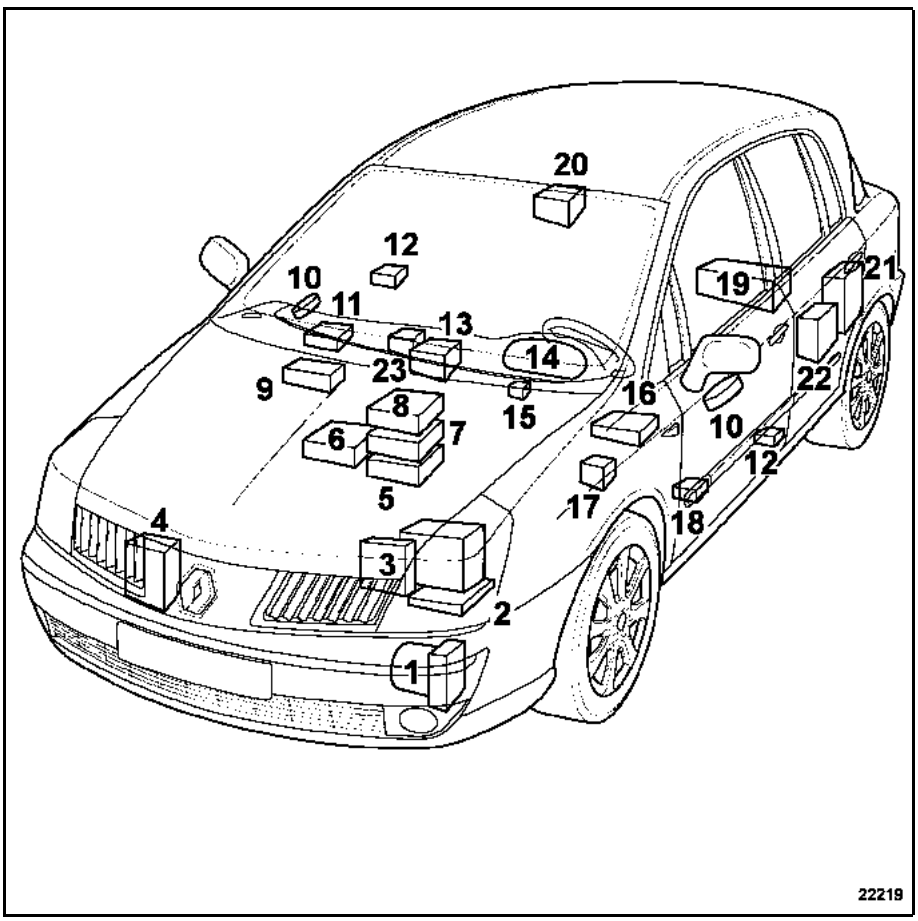

1 ABS computer
2 Injection computer
3 Automatic transmission computer
4 Cruise control remote control (radar)
5 RENAULT Card reader
6 Central Communication Unit (for Navigation)
7 Automatic air conditioning control panel
8 Radio
9 Radio display or navigation screen
10 Electric door mirror and window control
11 Voice synthesiser unit
12 Side impact sensors
13 Airbag computer
14 Instrument panel
15 Electric steering column lock
16 UCH
17 Beam adjustment
18 Driver's seat position memory
19 Electric parking brake
20 Parking assistance
21 Compact disc charger
22 Tyre pressure monitor computer
23 Automatic transmission side repeater

GETtheMANUALS.org

FRONT END

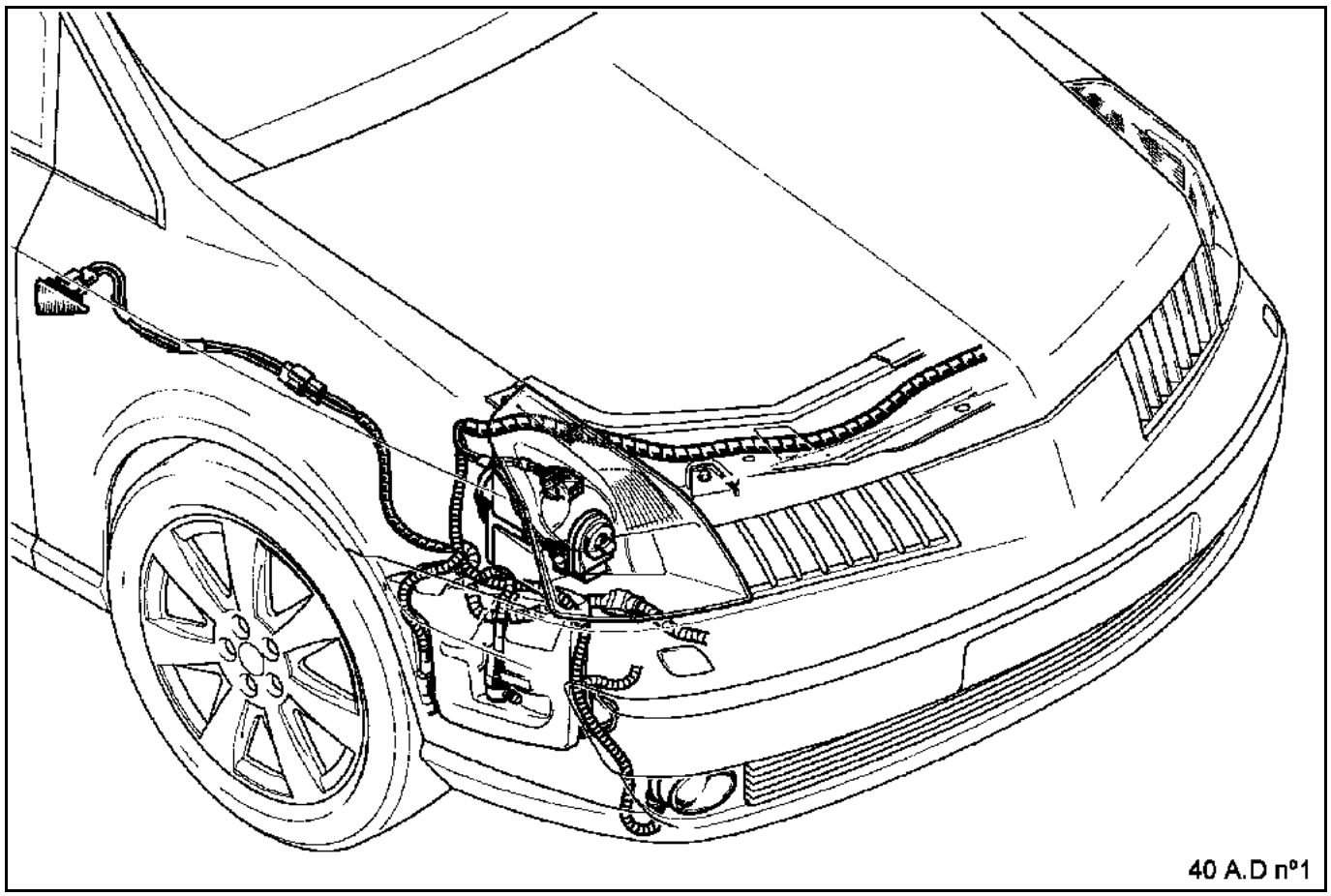

40 A.D nº1

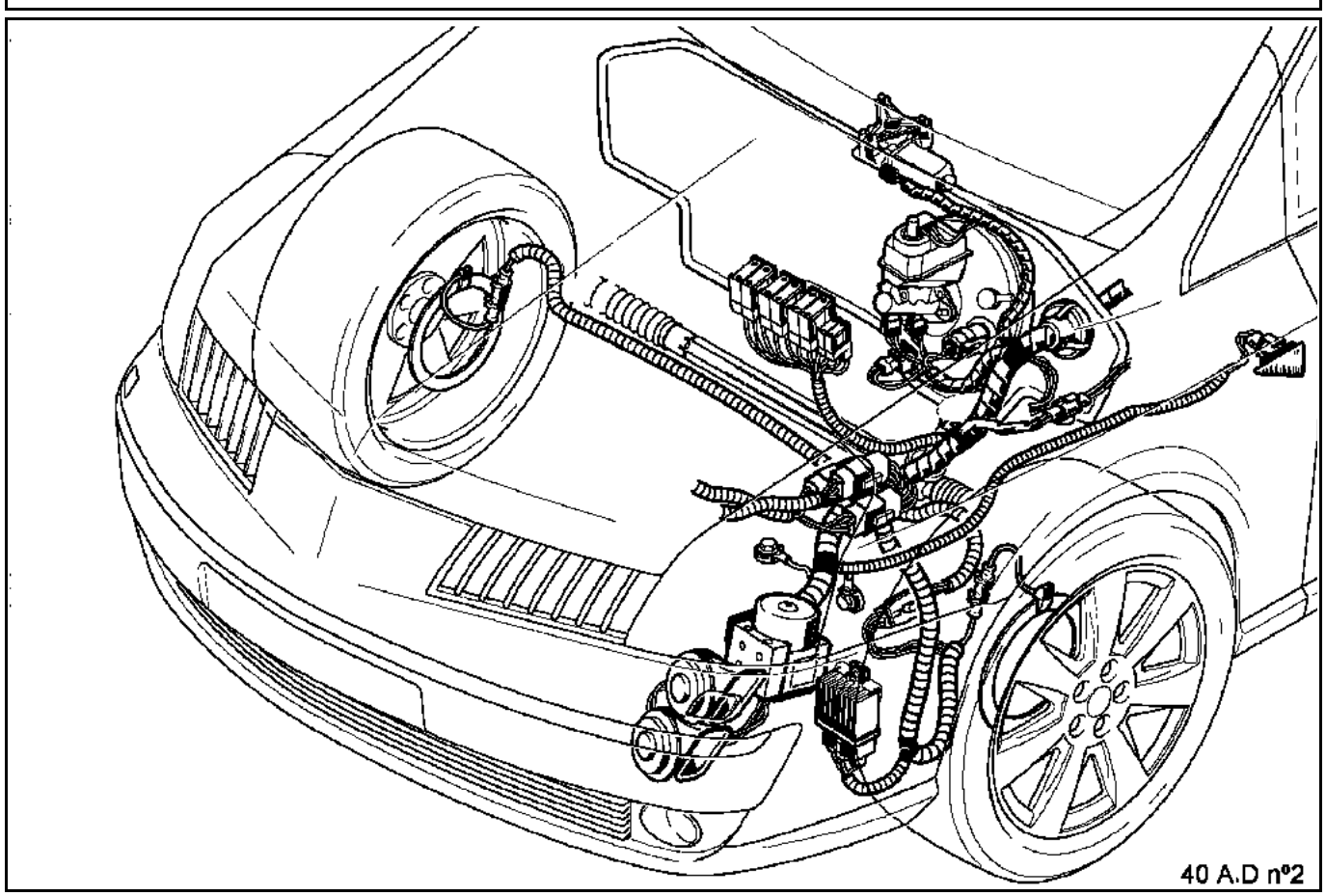

40 A.D nº2

GETtheMANUALS.org

BODY SIDES

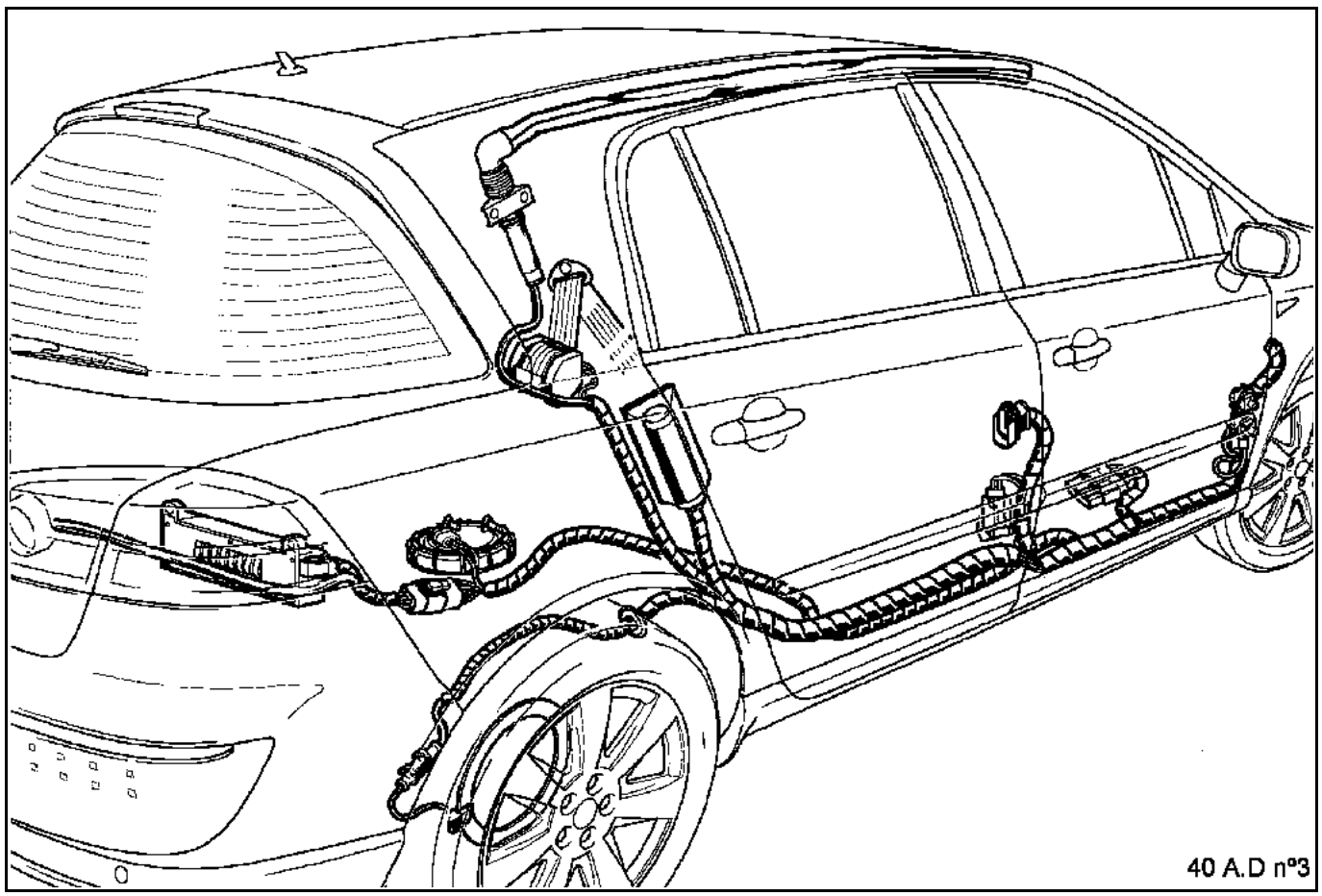

40 A.D nº3

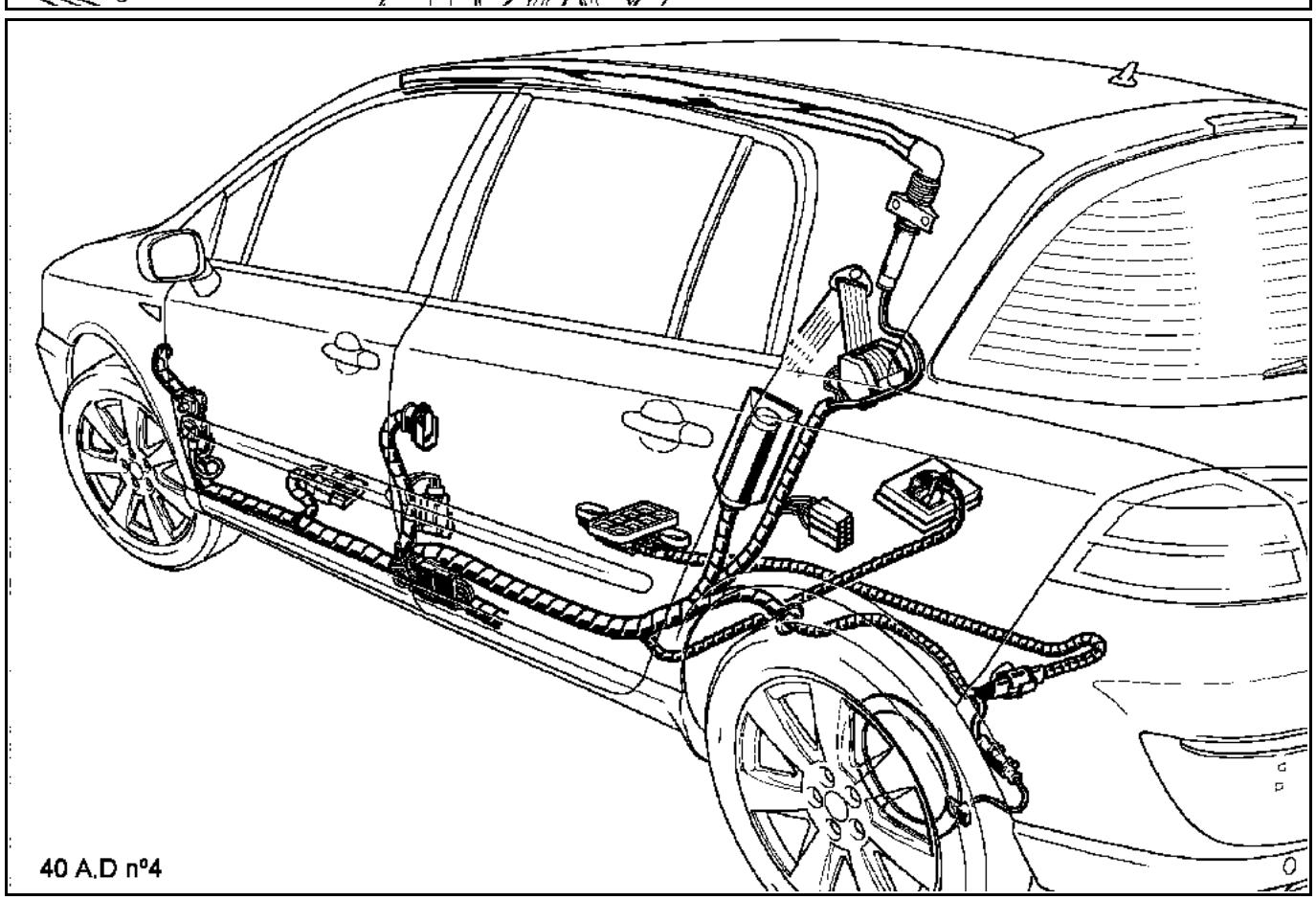

40 A.D nº4

GETtheMANUALS.org

SIDE DOORS

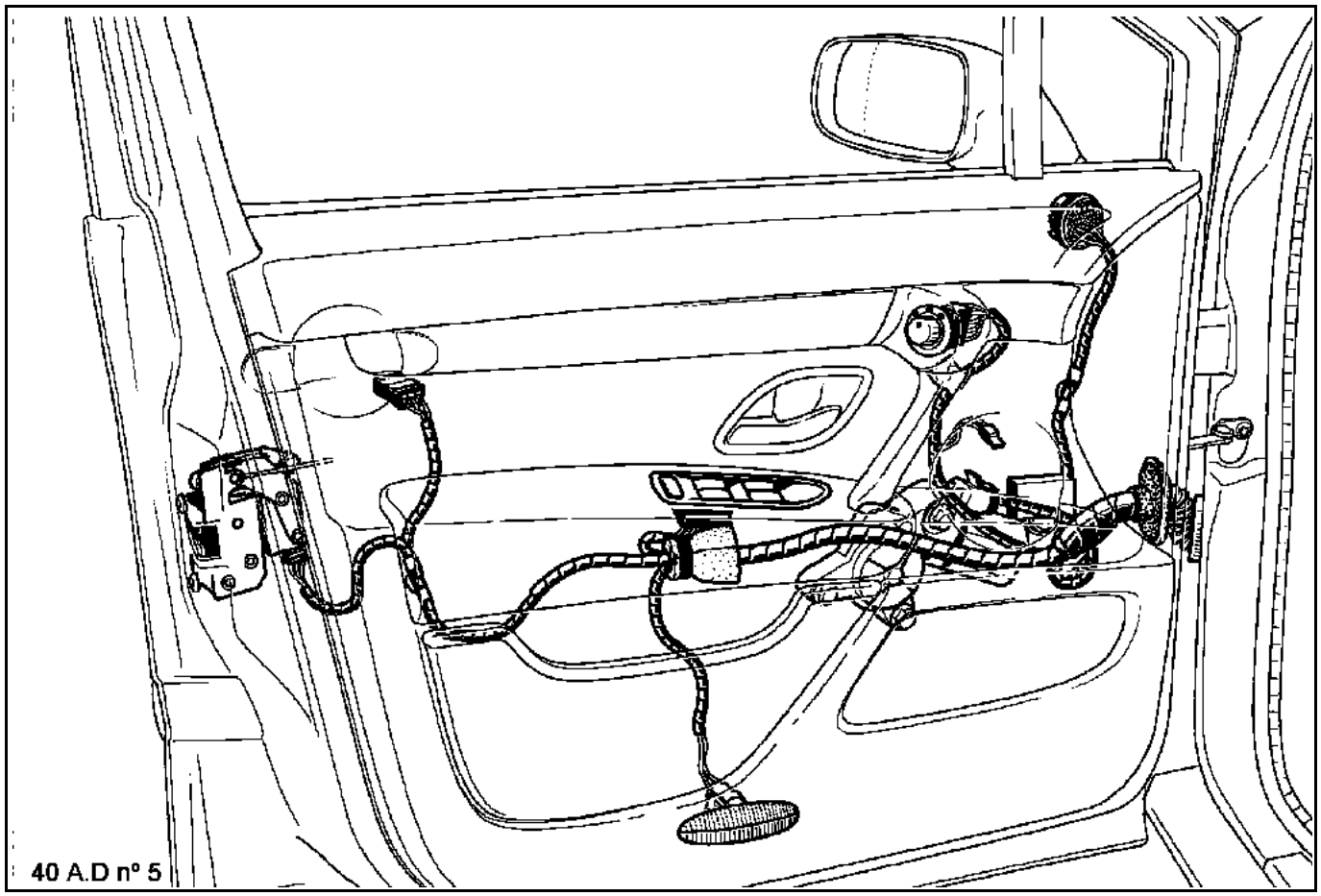

40 A.D nº 5

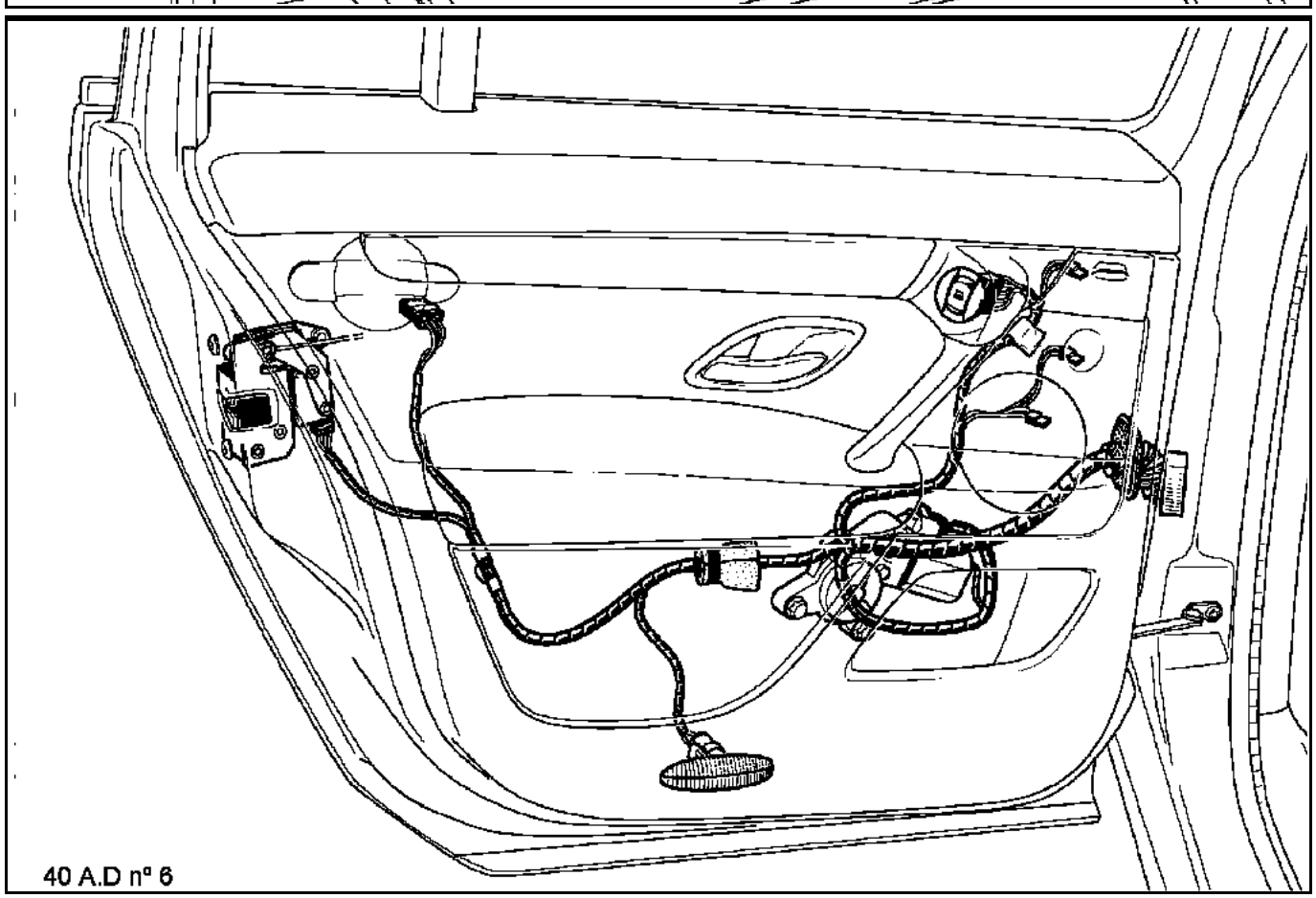

40 A.D nº 6

GETtheMANUALS.org

REAR SECTION

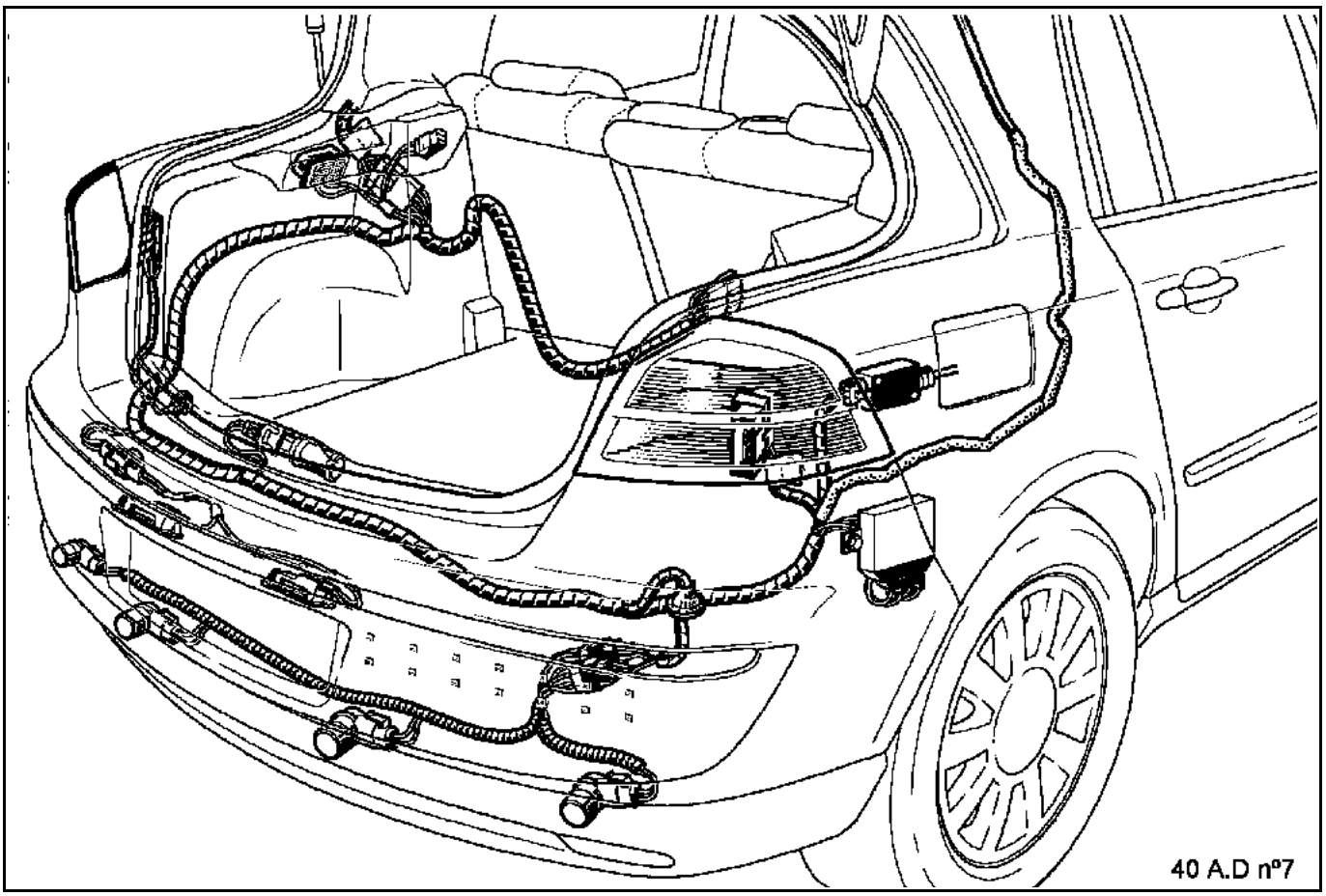

NOTE:
Wiring routing is given as a visual indication.
These are useful when removing removable objects or during a partial replacement of a structural component by cutting.
For more detailed information refer to the Electrical System Manual.

GETtheMANUALS.org

IMPORTANT:
The clearance values are given for information with their tolerance values.
During adjustment, it is essential to follow certain rules as a priority:
– Maintain symmetry with respect to the opposite side,
– Ensure that the gap and the overlap are regular.
– Check correct operation of the opening element, and the water and airsealing.

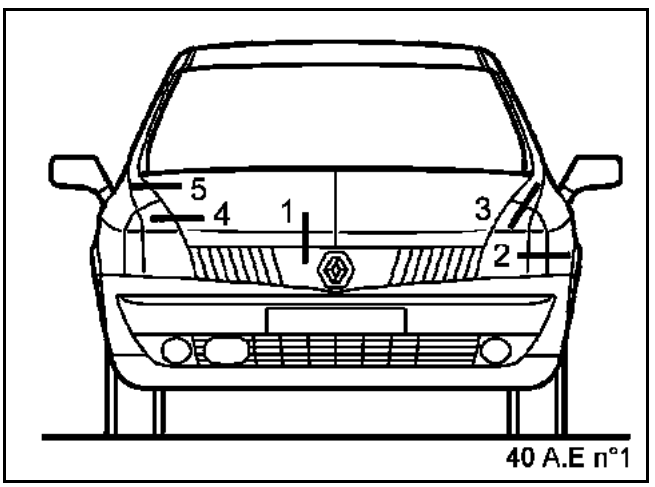

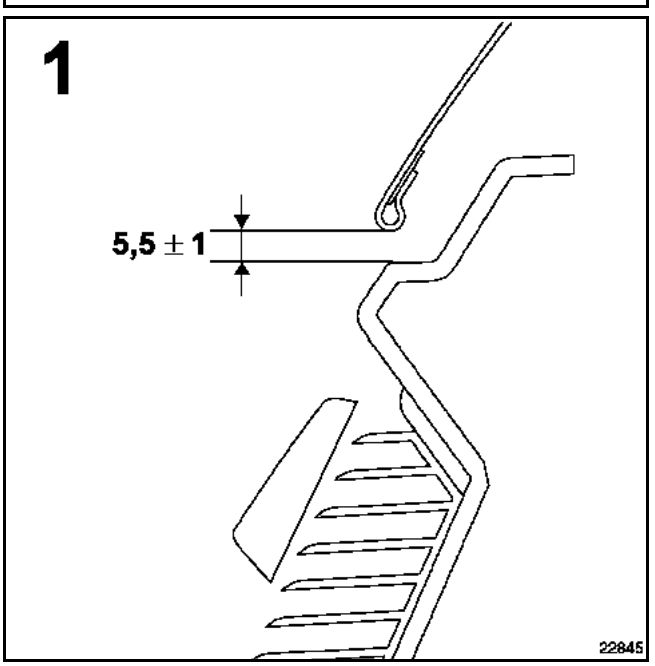

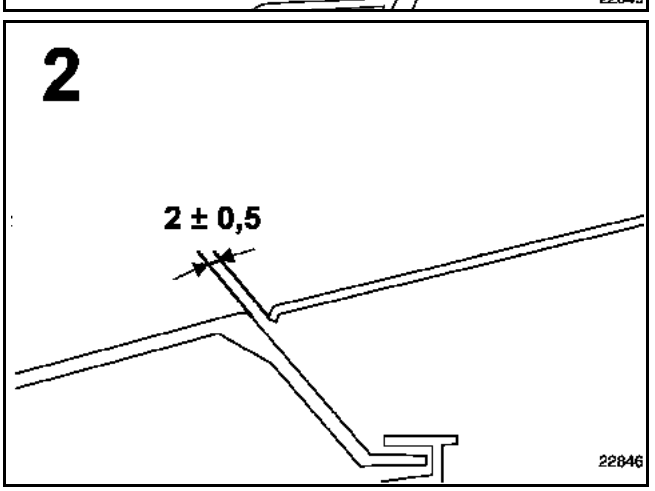

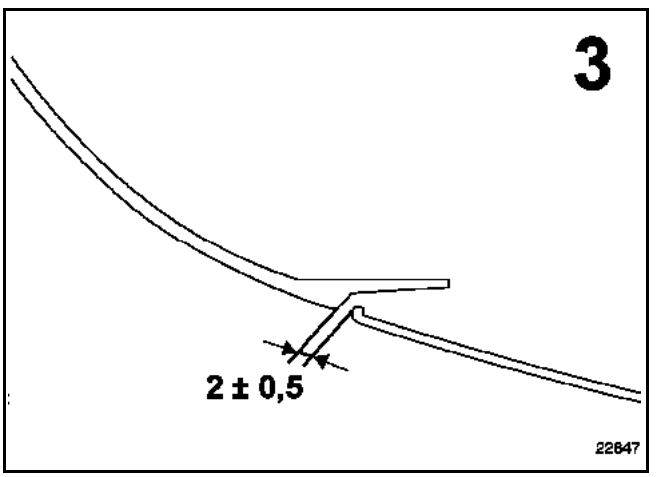

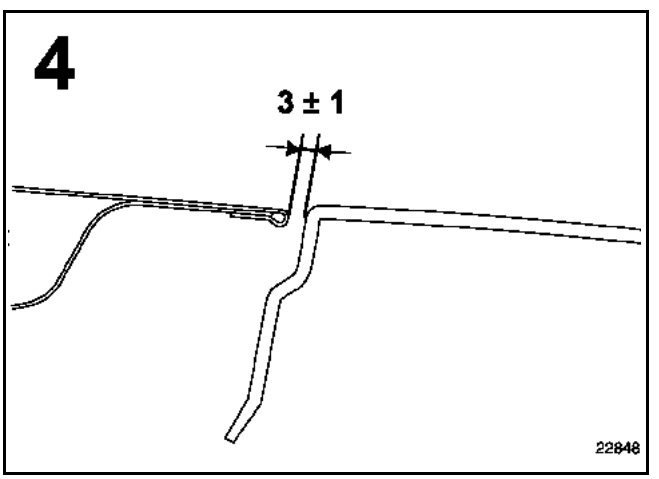

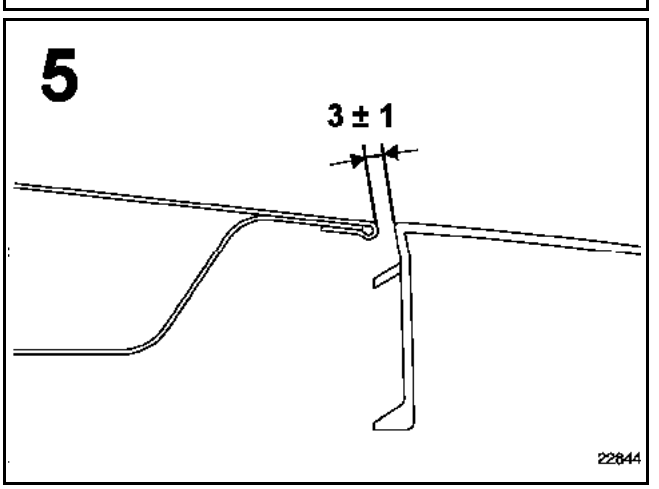

GETtheMANUALS.org

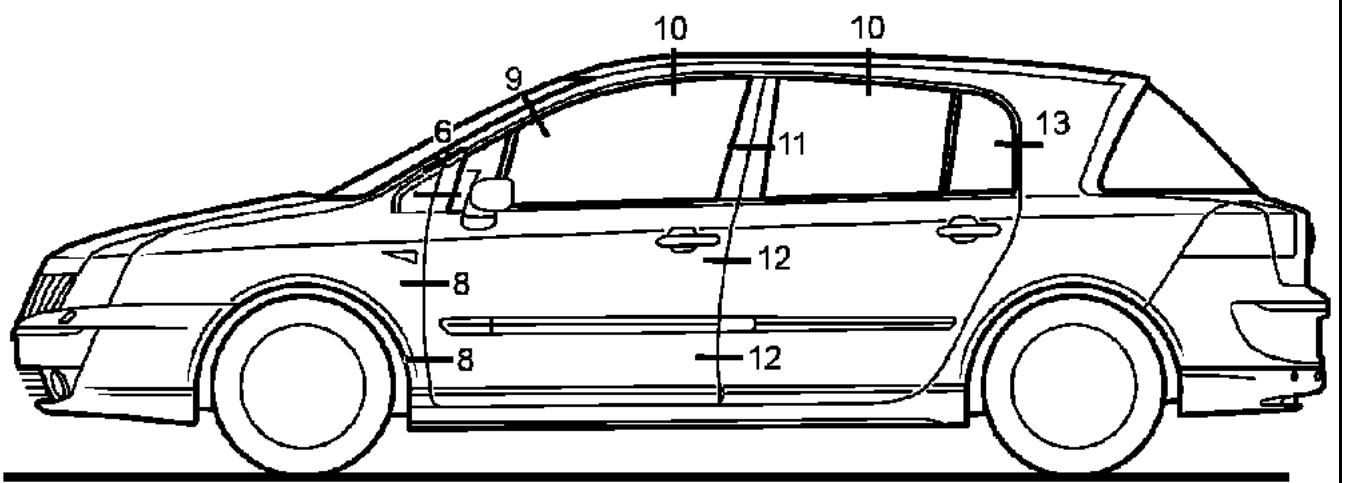

40 A.E nº2

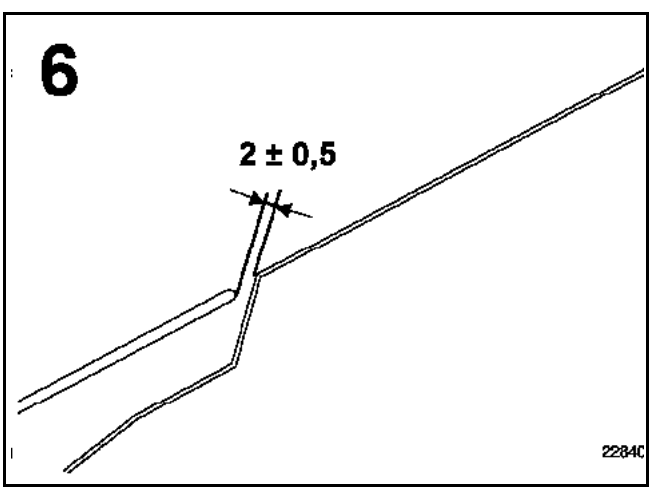

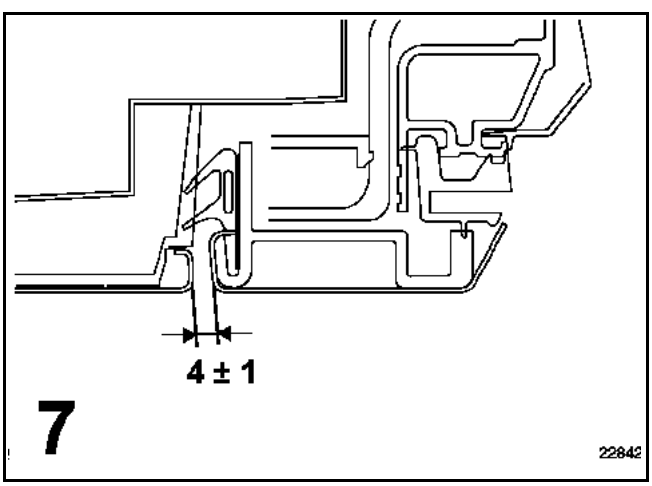

GETtheMANUALS.org

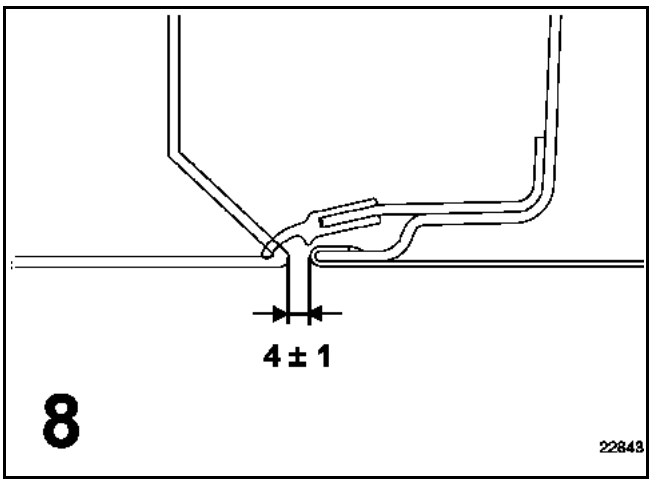

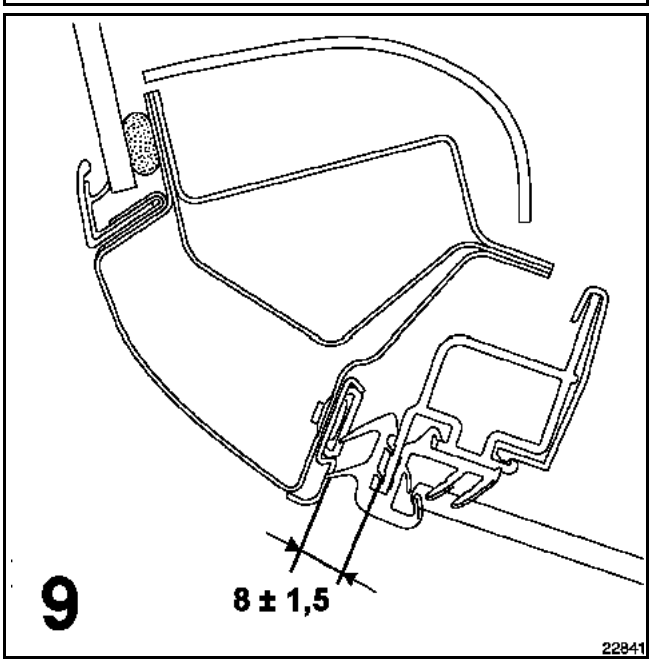

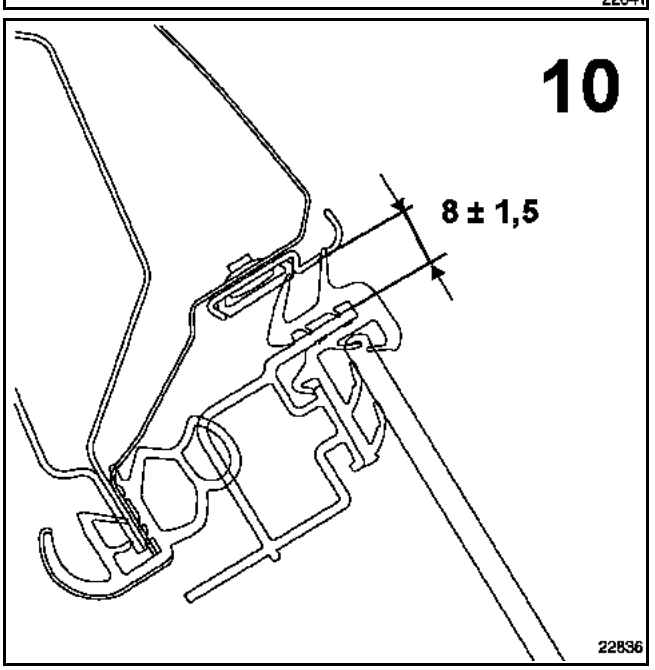

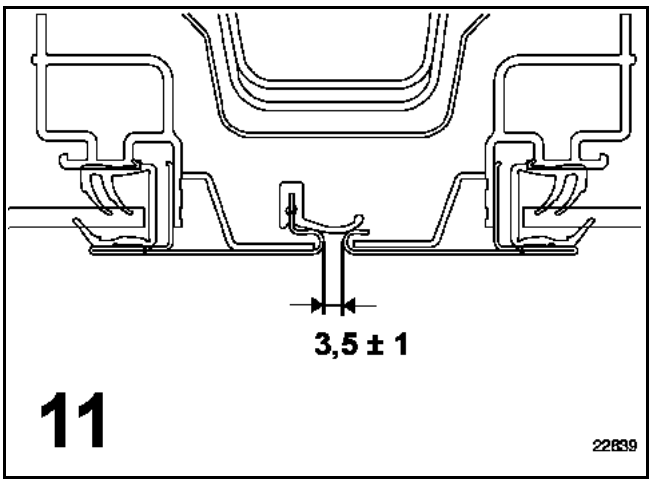

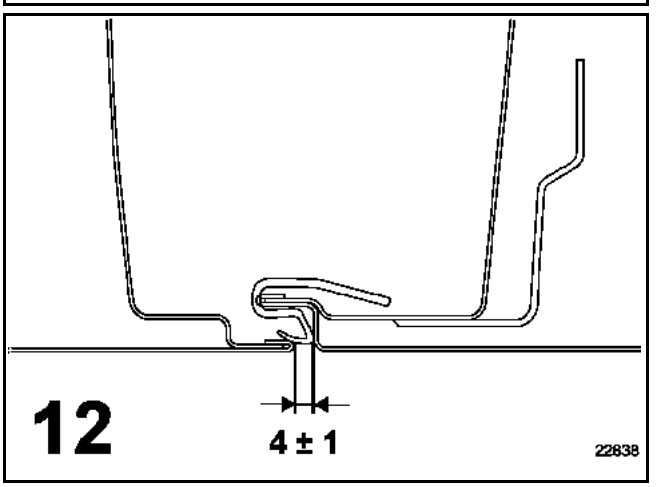

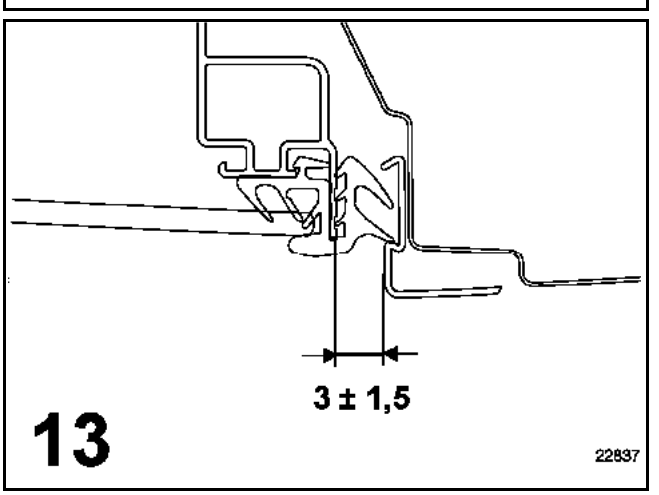

GETtheMANUALS.org

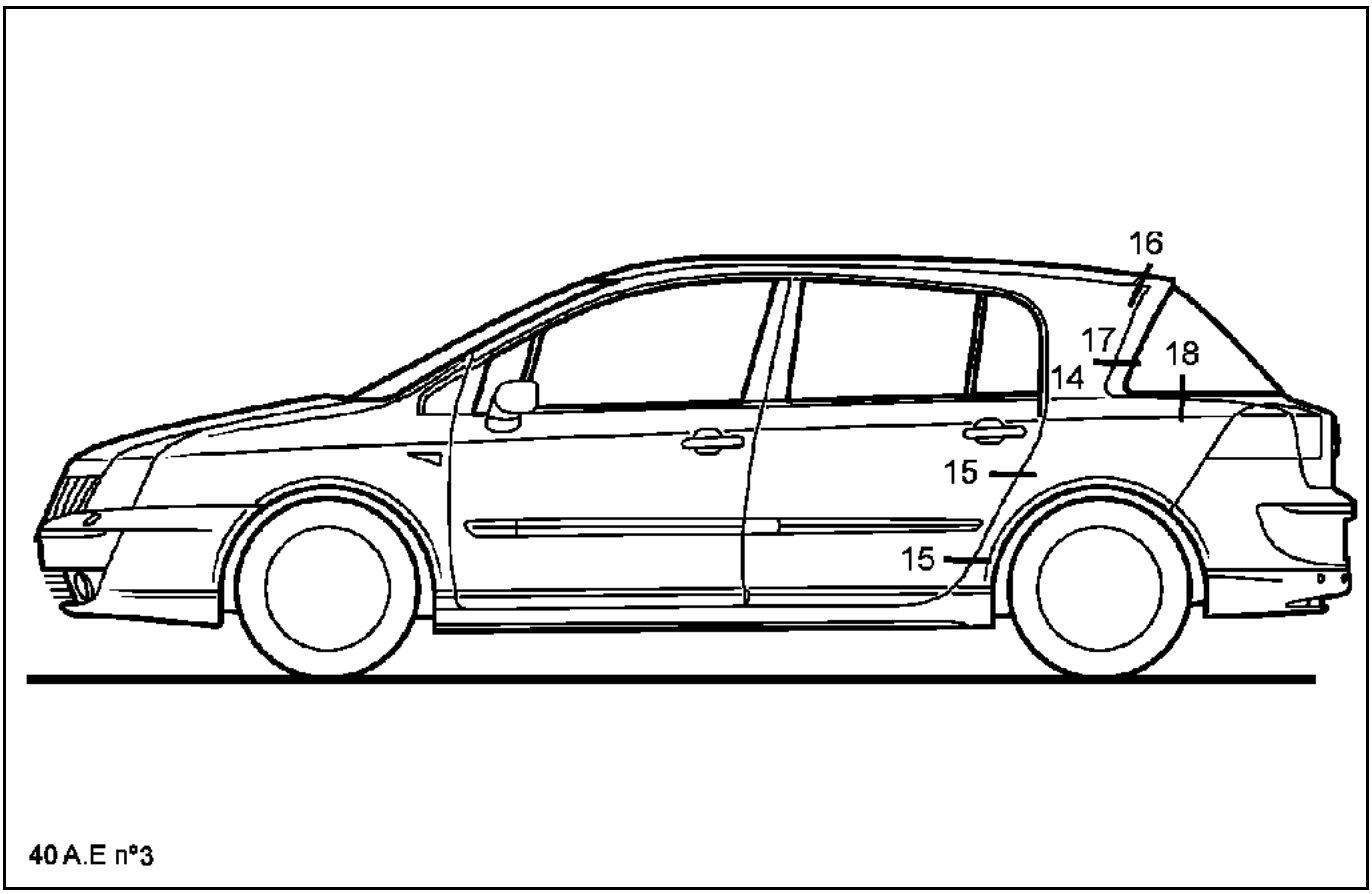

40 A.E n°3

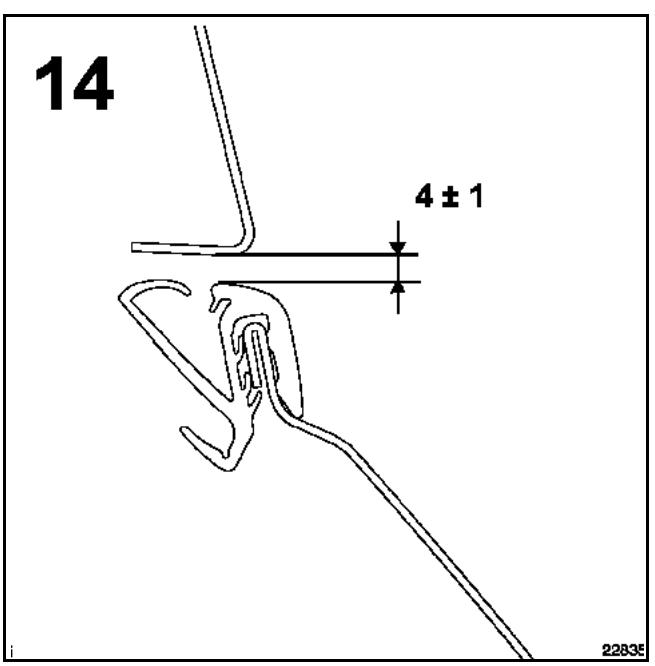

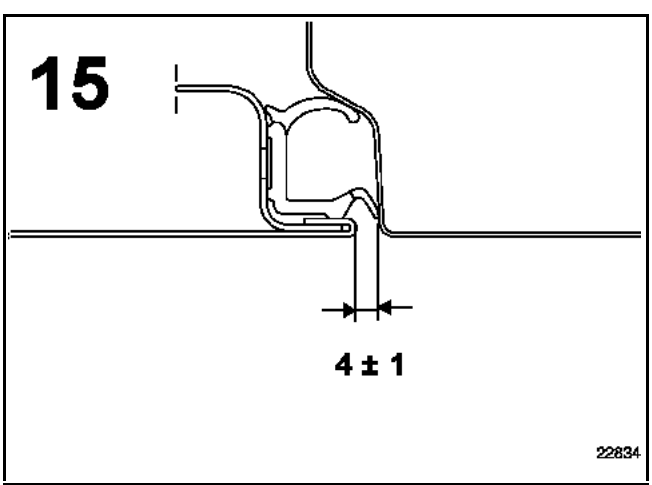

GETtheMANUALS.org

16

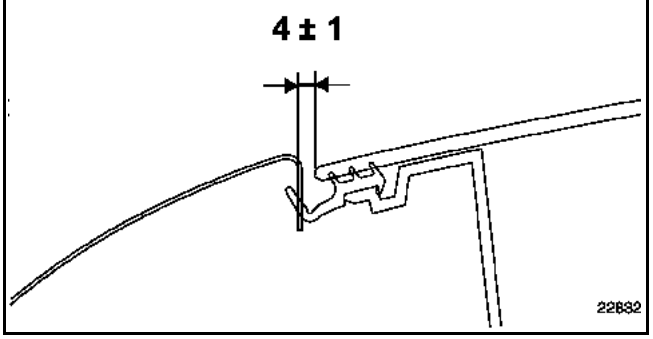

17

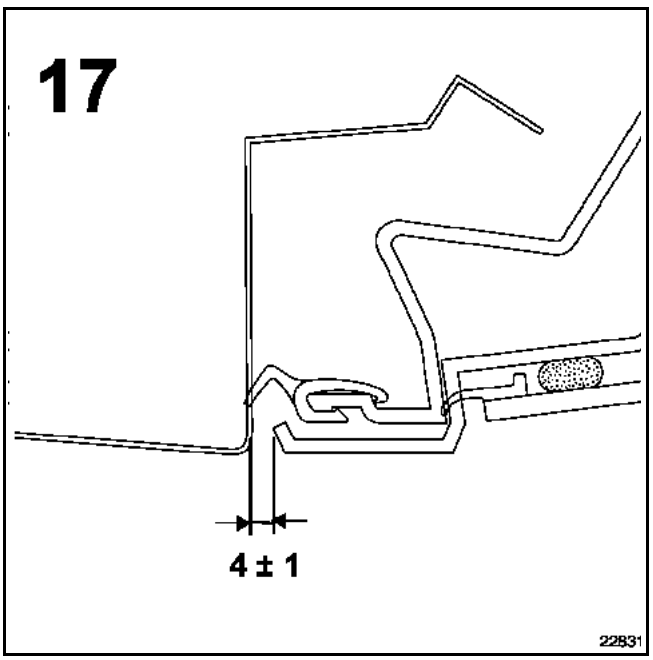

18

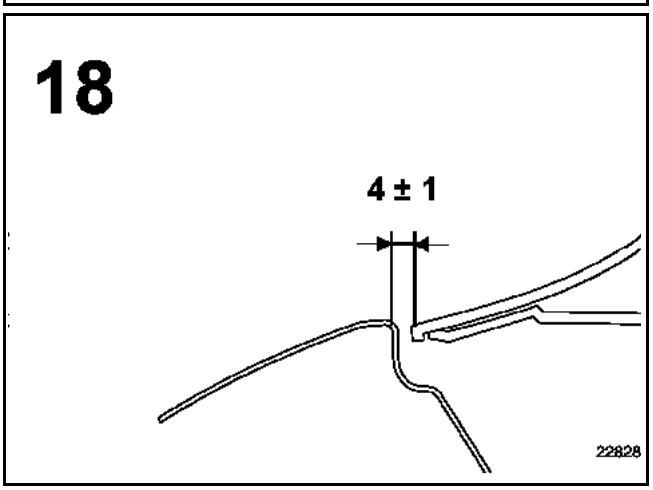

GETtheMANUALS.org

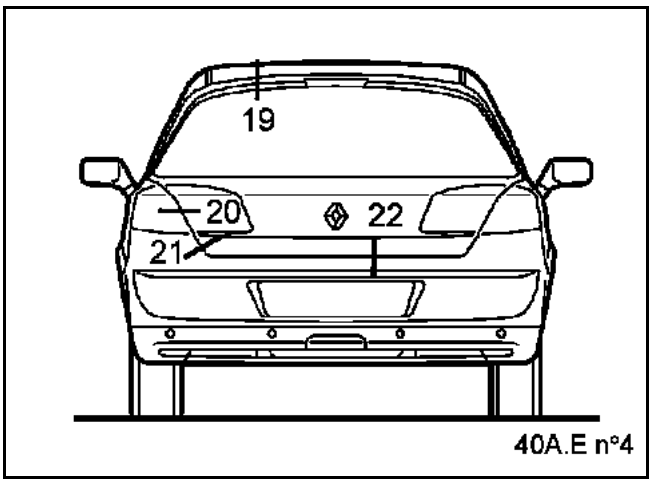

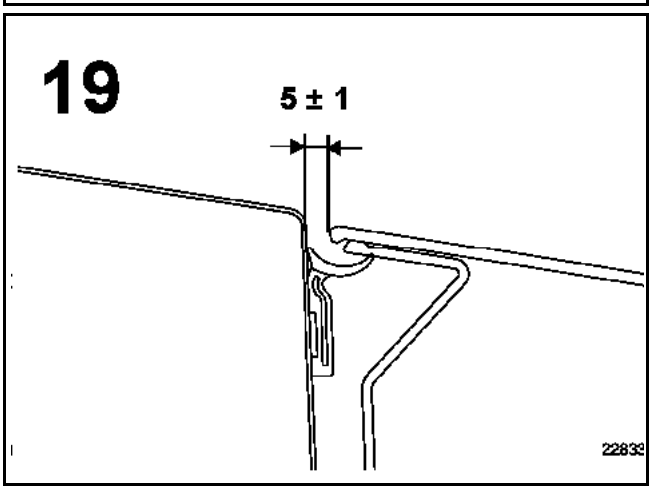

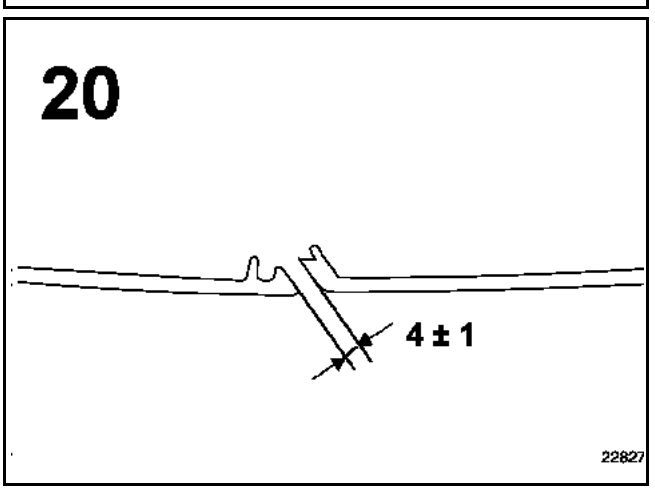

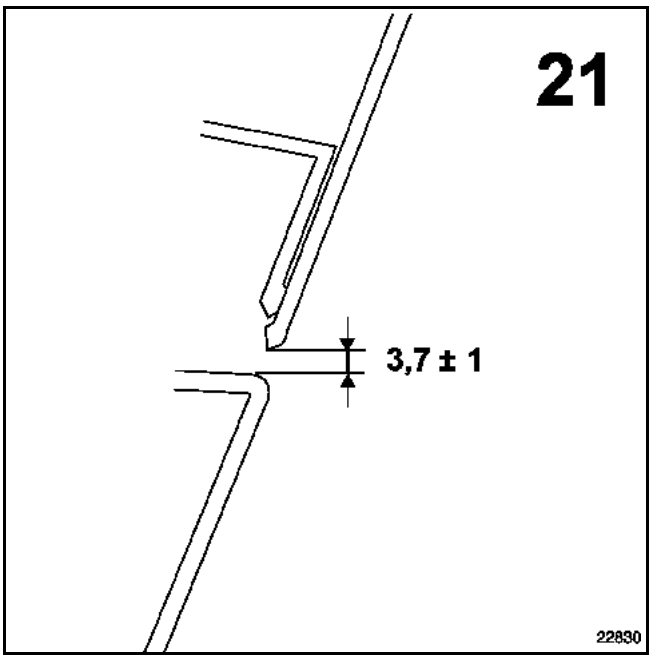

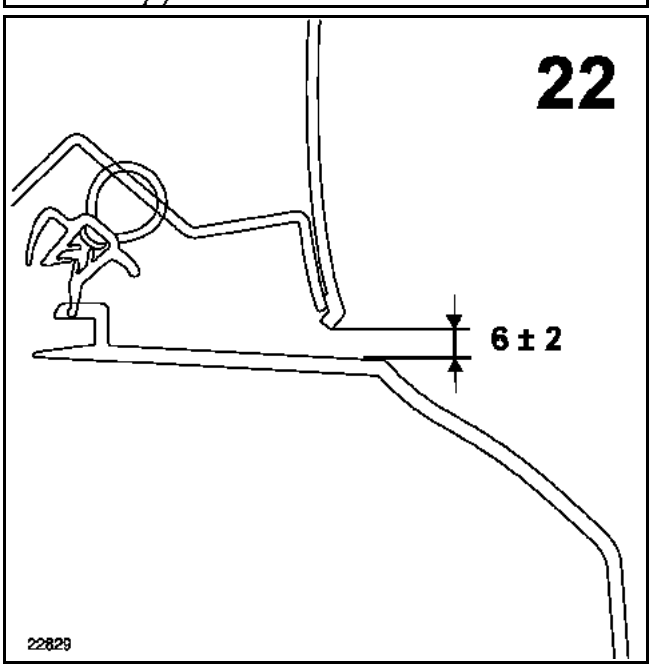

GETtheMANUALS.org

Before carrying out repairs to the bodywork of a car, even if the damage seems slight, it is necessary to carry out a series of tests:

VISUAL INSPECTION
This inspection involves examining the sub-frame of the vehicle where mechanical components are mounted and in the crumple zones or vulnerable areas in order to detect creases where materials have been damaged.

TRAMMEL GAUGE CHECK
The visual inspection may be completed using a trammel gauge which enables some damage to be measured by symmetrical comparisons (for more detail on each check point, see the repair bench paragraph below).

CHECKING THE ANGLES OF THE AXLES
This is the only check which determines whether the impact suffered by the vehicle has or has not affected its road holding.

IMPORTANT:
In borderline cases, it will also be necessary to check the axle components, which may also have suffered damage. In principle, no welded component in the body shell should be replaced without ensuring that the sub-frame has not been affected by the impact.

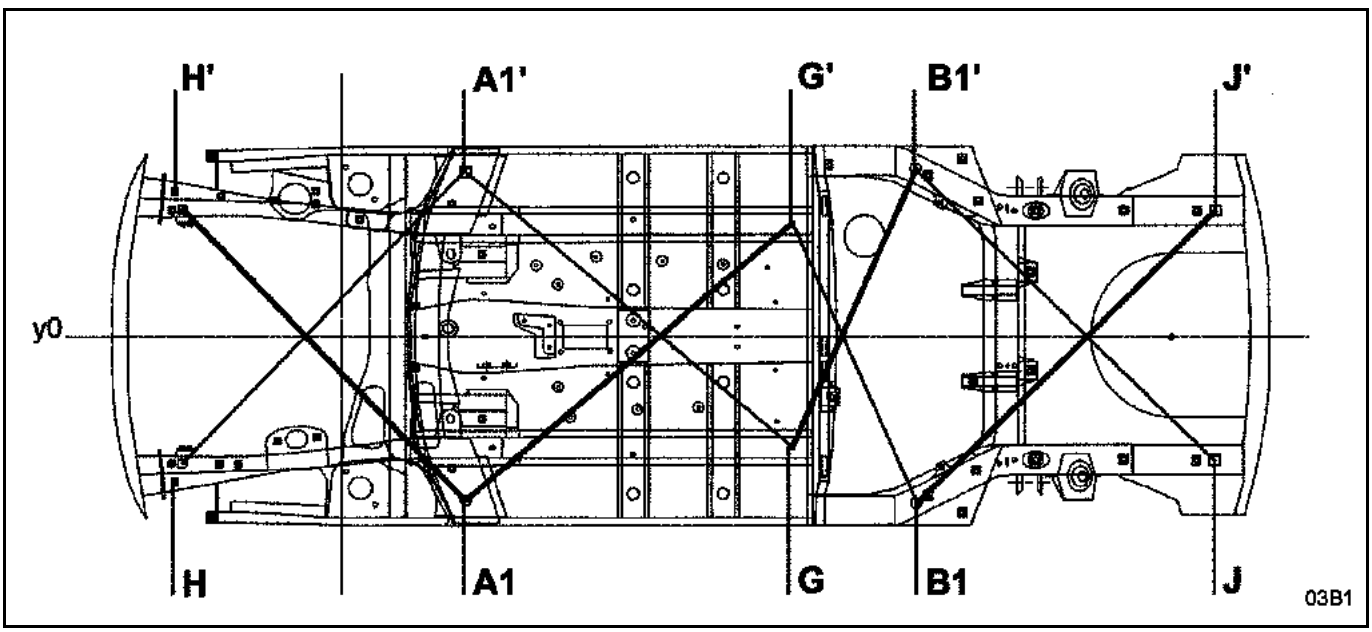

Chronological order of checks:

FRONT impact:
1: G - A1' = G' - A1
2: A1' - H = A1H'
REAR impact:
1: G - B1' = G' - B1
2: B1' - J = B1 - J'

GETtheMANUALS.org

GAUGE POINTS

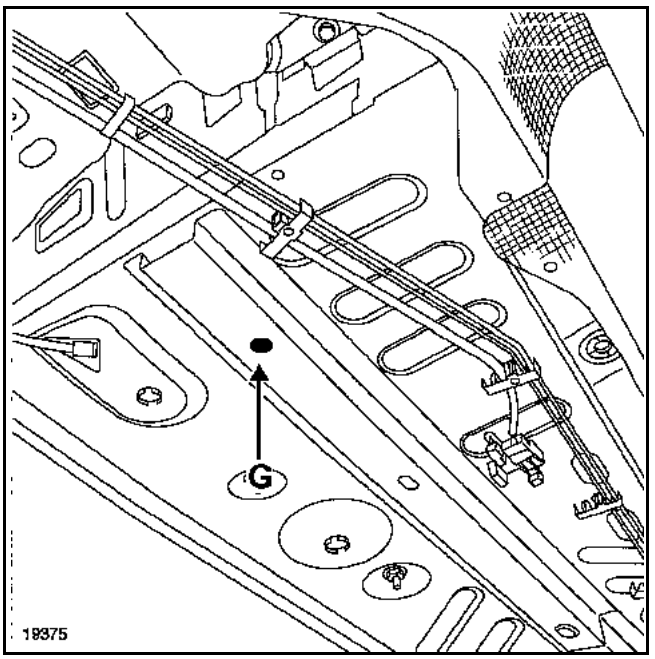

Point G
Start point for checking points (A1) and (B1).

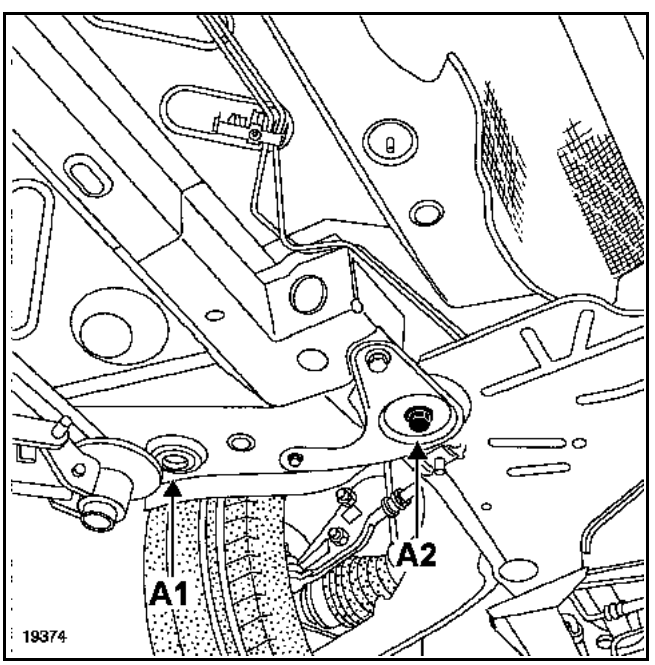

Point A1
Front body reference.

NOTE:
The point A2 can also be used as a reference point if point A1 is found not to be correct.

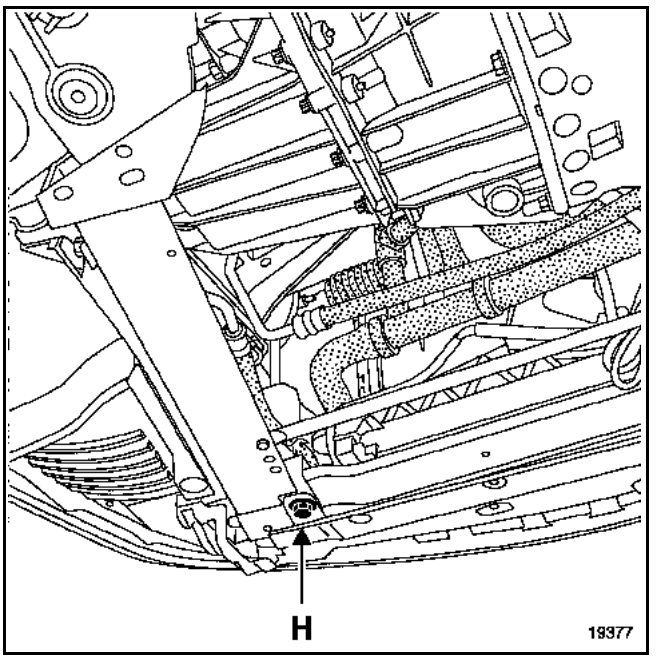

Point H
Front end of front side member.

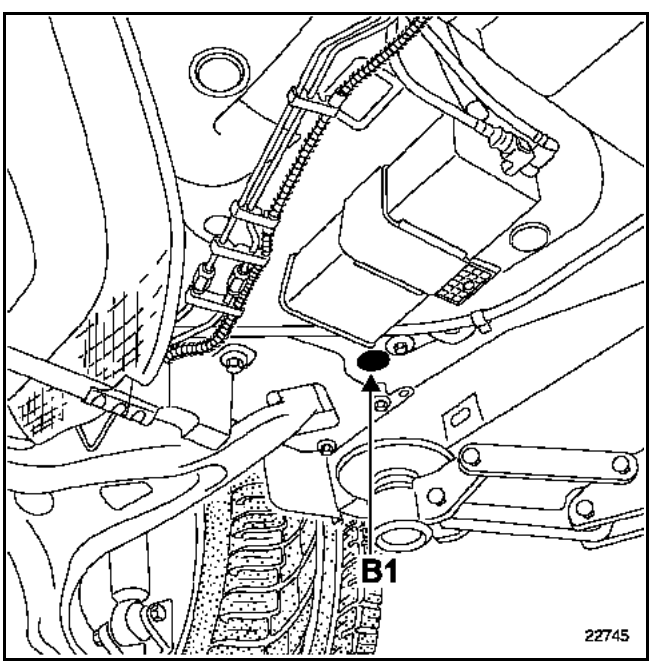

Point B1
Rear axle assembly leader pin.

GETtheMANUALS.org

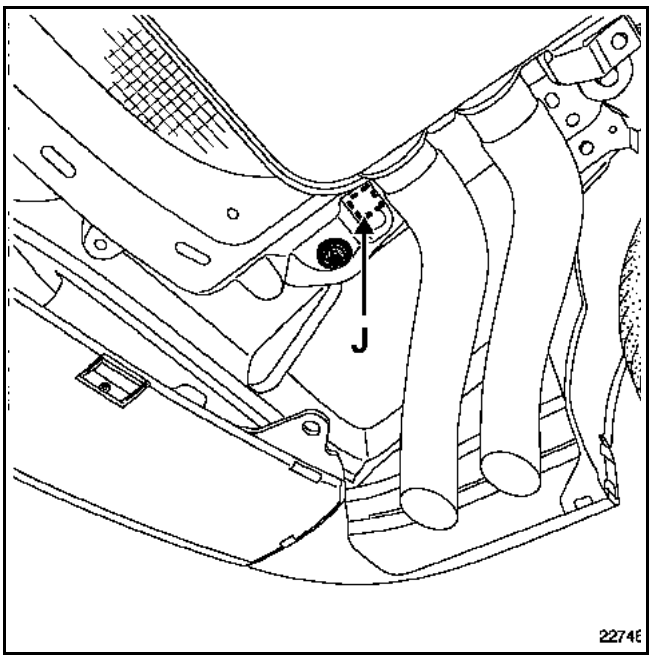

Point J

Rear end of rear side member

The plastic protection must be partially removed for access to point J.

REMINDER:
The underbody holes are fitted with plastic blanking covers to ensure that all cavities are watertight.

Some of these blanking covers have to be removed during testing.

If any of the blanking covers have deteriorated, they must be renewed in order to maintain the vehicle's anti-corrosion warranty.

GETtheMANUALS.org

	DESCRIPTION	DIMENSION X (mm)	DIMENSION Y (mm)	DIMENSION Z (mm)	DIAMETER (mm)	ANGLE
A	Front sub-frame rear mounting G	**384.5**	**337**	**61**	**Ø29.5; M12**	**0**
B1	Rear axle leader pin	**2268.5**	**647**	**60**	**Ø30**	**0**
B2	Rear axle front mounting G	2431.5	555	60	∅14.5; M10	0
C	Front sub-frame front attachment (hole)	92.5	426	243	∅18.5	7°
C1	Front sub-frame front attachment (lug)	65.5	417	247	∅8	7°
C2	Front sub-frame front attachment (lug)	117	410.5	247	∅8	7°
D1	Rear axle sub-frame guide	2791.5	478	244	∅16.8	0
D2	Rear axle sub-frame guide	3066.5	478	235.3	∅10.2	0
E	Rear shock absorber upper mounting	2675.3	566.4	446.6	∅14.5; M12	4°
F	Front shock absorber upper mounting	51.5	615	691.5	∅48.7	-
F1	Front shock absorber upper stop	51.5	550	707	-	-
F2	Front shock absorber upper stop	7	660	713.5	-	-
F3	Front shock absorber upper stop	116	643.5	703	-	-
G	Front side member rear leader pin	1650	443.5	- 22	∅20	0
H	Front side member front leader pin	- 620	498	260	20×20	0
J	Rear side member rear leader pin	3298	478	224	20×20	0
K	Front panel attachment leader pin	- 640	564	260	∅14.5; M10	0
K1	Front end cross member (front panel mounting)	- 614	430	432	M8	90°
K2	Front end cross member (front panel mounting)	- 581	430	432	M8	90°
L	Rear end cross member (end panel)	3498.7	417	205	10.2	5°
M	Leader pin under centre floor	640	443.5	-23.5	16.2×20.2	0
P1	Engine mounting	-271	535	524	M8	0
P2	Engine mounting	-141	513	524	M8	0
Q1	Gearbox mounting	-244,5	410.5	415	∅14.5; M12	0
Q2	Gearbox mounting	-111.5	399.5	415	∅14.5; M12	0
R	Additional engine mounting (tie-rod)	35	453	583	∅14.5; M12	0

A and B = vehicle trim-setting reference

GETtheMANUALS.org

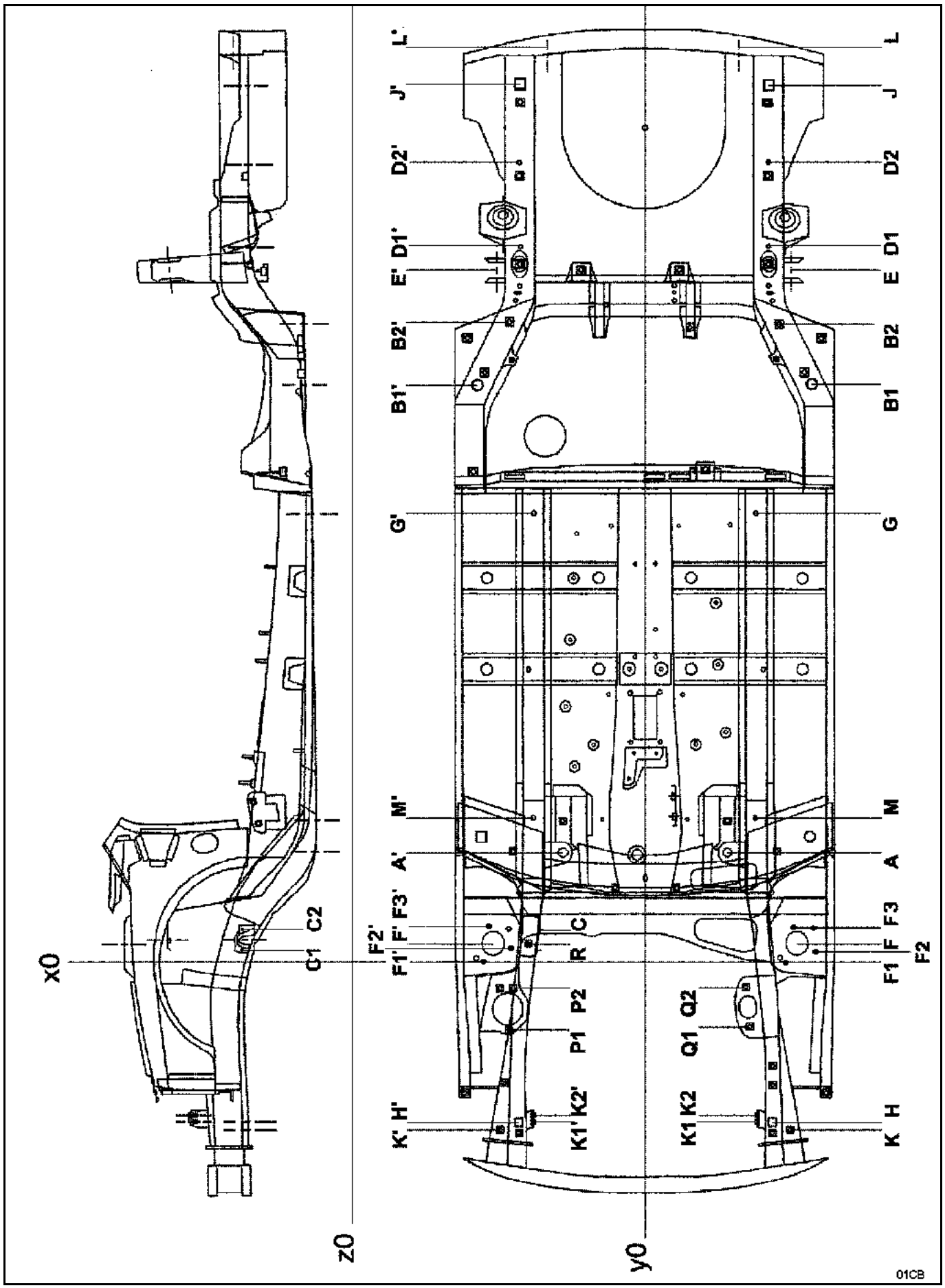

GETtheMANUALS.org

1. PRINCIPLE REFERENCE POINTS FOR SETTING VEHICLE TRIM LEVEL

A - FRONT SUB-FRAME REAR MOUNTING

This is the main front reference point for setting the vehicle trim level.

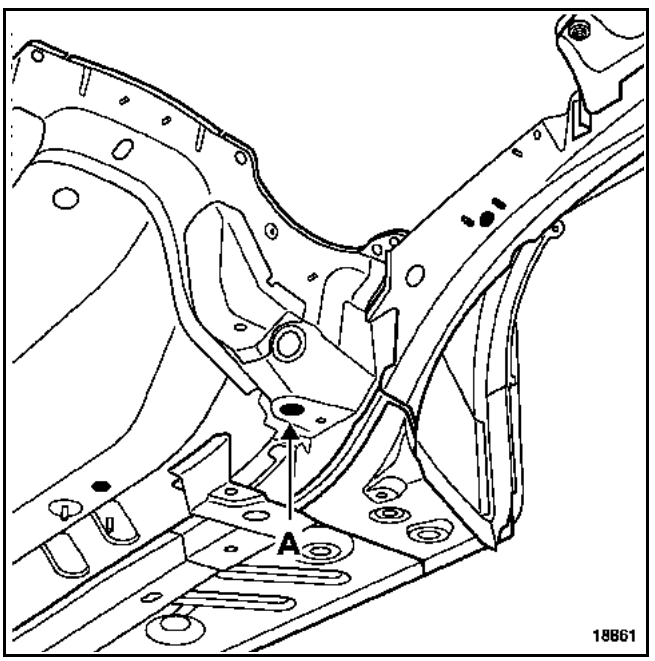

1 - Front mechanical components removed

NOTE:
on the left-hand side, the hole is round;
on the right-hand side, it is slotted.

If replacing the sub-frame rear support, this reference point is replaced temporarily by point (M), located on the rear section of the front side member, point (A) thus being used for positioning the replaced part.

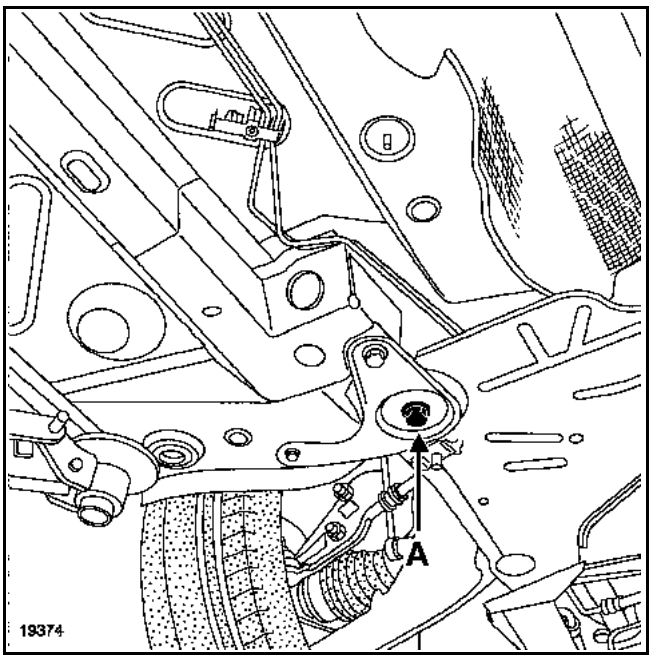

2 - Front mechanical components in place

The bracket covers the sub-frame mounting bolt.

Two possible cases can arise:
1 If the rear of the vehicle is being rebuilt, these two points alone can be used to align and support the front of the vehicle.
2 For a light frontal impact not requiring removal of the front axle sub-frame.

If in doubt about the damage to one of the main reference points (A or B), it is advisable to use the two additional points located in the area not affected by the impact to confirm the trim level.

GETtheMANUALS.org

B - REAR AXLE FRONT MOUNTING

This is the main rear reference point for setting the trim level.

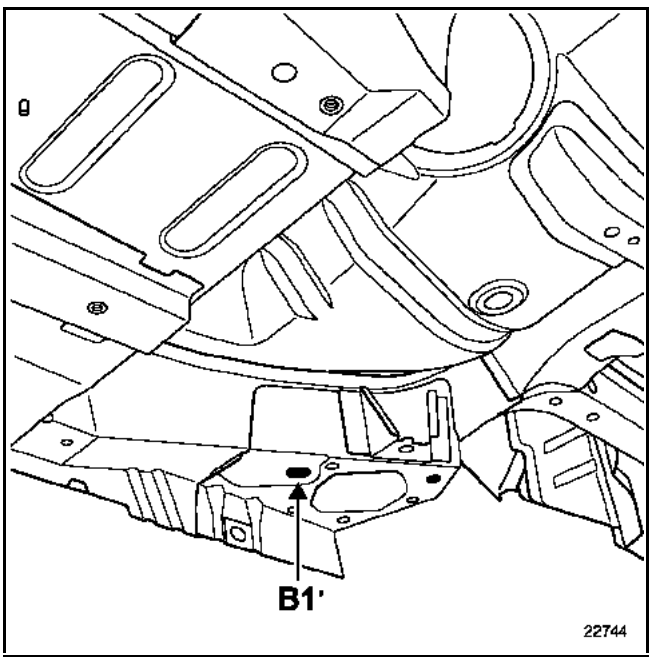

1 - Rear mechanical components removed

The bracket rests on the underside of the rear sub-frame assembly mounting unit, centred in the axle-assembly pilot hole.

If replacing the complete rear side member or the rear floor unit, this reference point is replaced by point (G), located on the front side member, point (B) being used to position the replaced component.

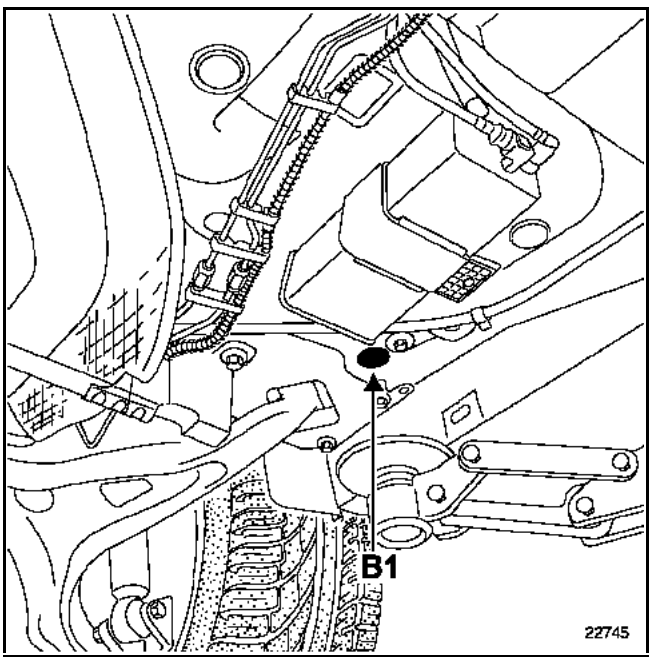

2 - Rear mechanism in place

GETtheMANUALS.org

2. ADDITIONAL REFERENCE POINTS FOR SETTING VEHICLE TRIM LEVEL

These are the provisional reference points which are used when the principle reference points have been affected by the impact.

These points allow additional vehicle support to the main reference point on the impact side, but allow only a roughly accurate vehicle alignment.

IMPORTANT NOTE:
These reference points should only be used in the cases mentioned above, they are not required when both main reference points (points A and B) are correct.

This additional reference function may also be filled by the front side member ends check points for a rear impact, and vice-versa.

LEADER PIN UNDER FRONT FLOOR (front side member - central section)

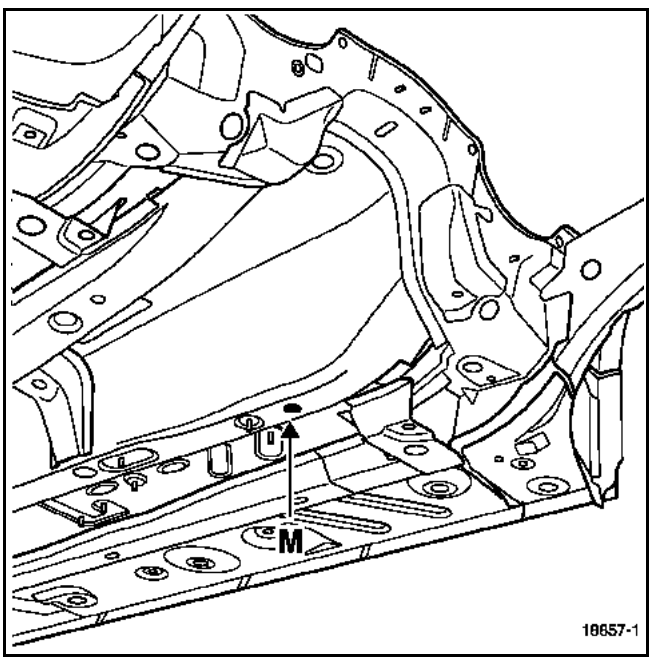

The point (M) can also be used to position the replacement part.

G. REAR END OF FRONT SIDE MEMBER

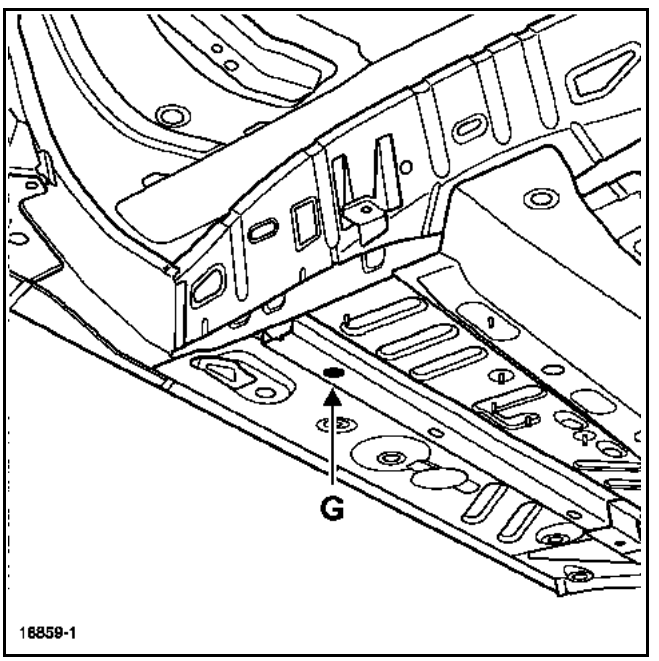

This point is also used as a positioning reference when replacing a rear section of the front side member.

GETtheMANUALS.org

3. REFERENCE POINTS FOR POSITIONING REPLACED PARTS

C - FRONT SUB-FRAME FRONT MOUNTING

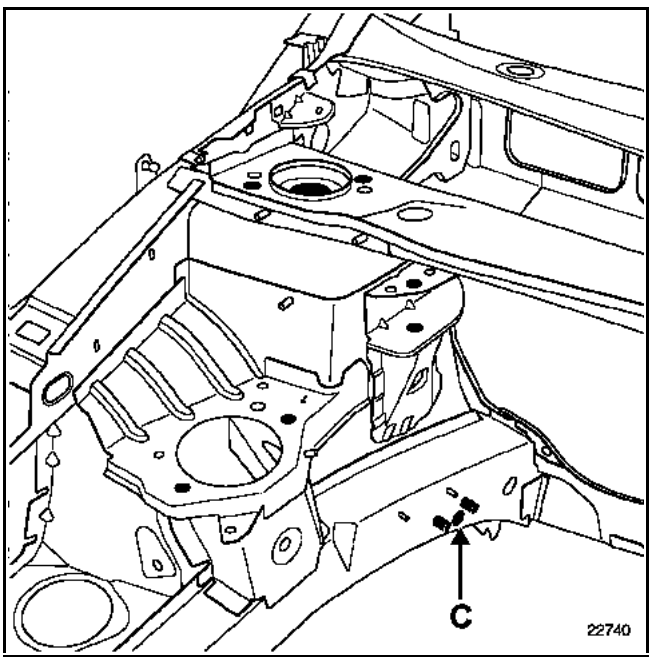

1 - Front mechanical components removed

The bracket rests under locating studs (1) for the front part of the sub-frame and can be fixed in the sub-frame attachment hole.

It is used when replacing:
– a partial or complete front side member,
– a half-unit.

F - FRONT SHOCK ABSORBER UPPER MOUNTING

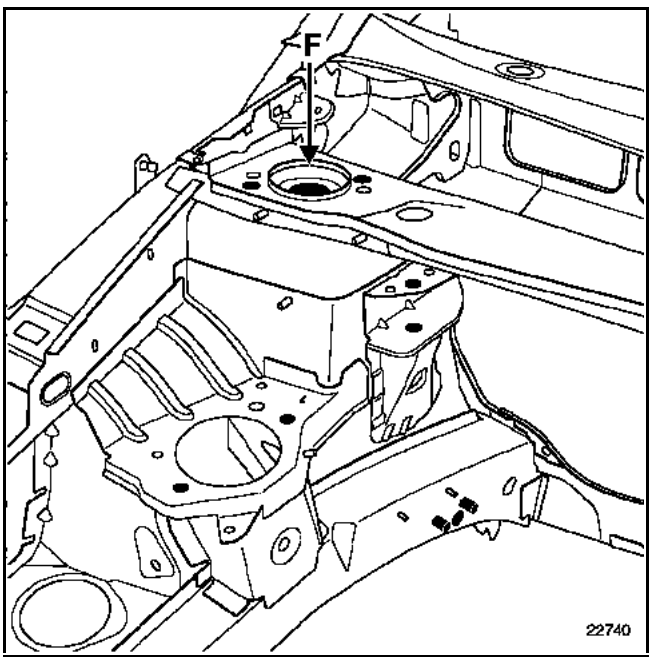

The bracket rests under the shock absorber cup and is centred in the shock absorber mounting holes.

It is used when replacing:
– a wheel arch,
– a front half-unit.

It is also used when straightening.

GETtheMANUALS.org

E. REAR SHOCK ABSORBER MOUNTING

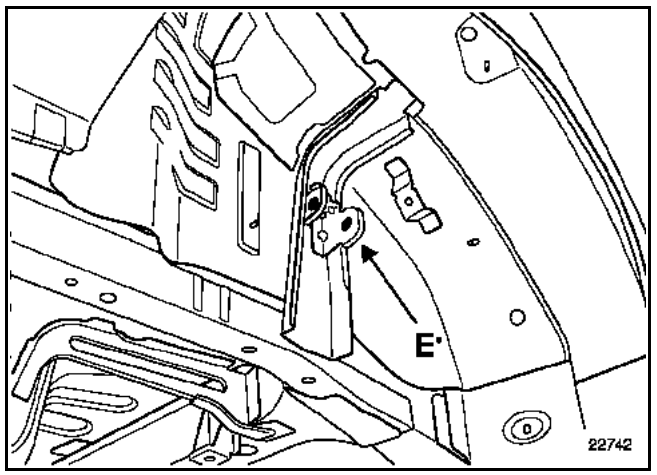

The bracket is centred and mounted inside the shock absorber shaft.

It is used when replacing the inner rear wheel arch.

P. ENGINE MOUNTING

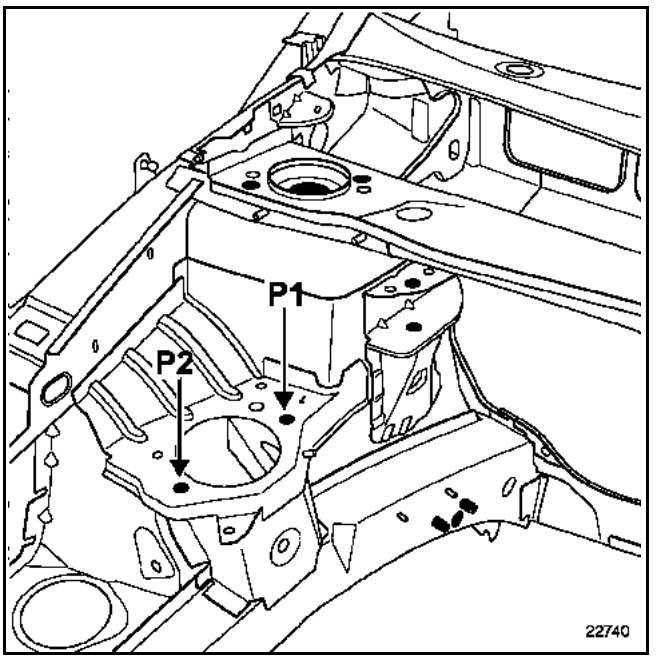

The bracket is positioned from above the engine mounting and is centred in the mounting holes of the pad.

It should be used with the mechanical components removed to replace a front half-unit.

GETtheMANUALS.org

Q - GEARBOX MOUNTING

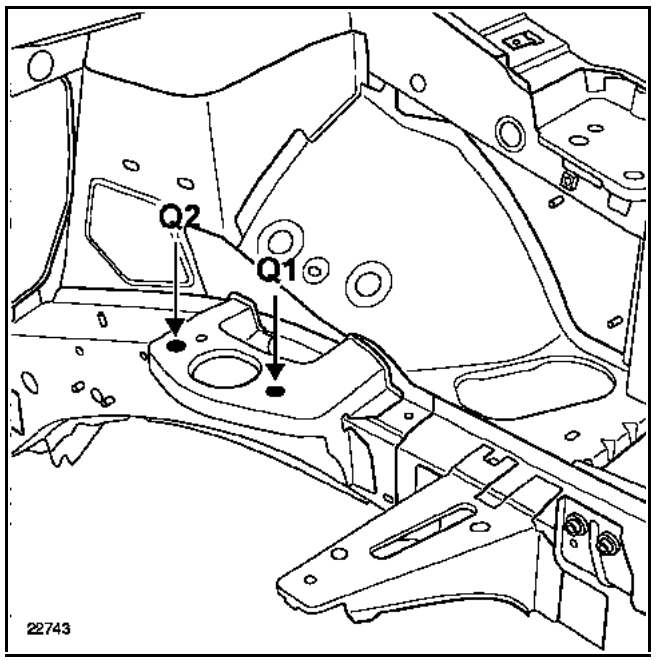

The bracket is positioned from below the gearbox, centred in the mounting holes of the shoe.

It should be used with the mechanical components removed to replace a front half-unit.

R - ENGINE TIE-ROD MOUNTING

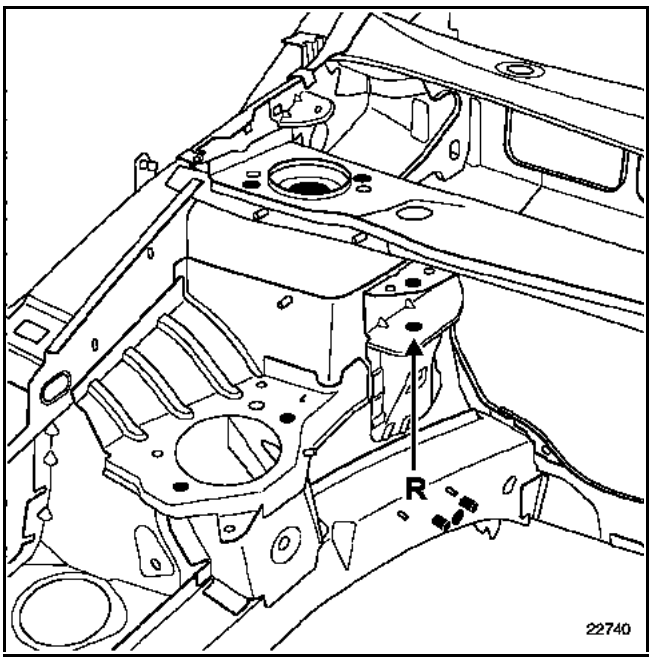

The bracket is placed in the tie-rod fork, and is fixed in place of the latter.

It is used for setting up the geometrical reference for the tie-rod fork.

GETtheMANUALS.org

J - REAR SIDE MEMBER END

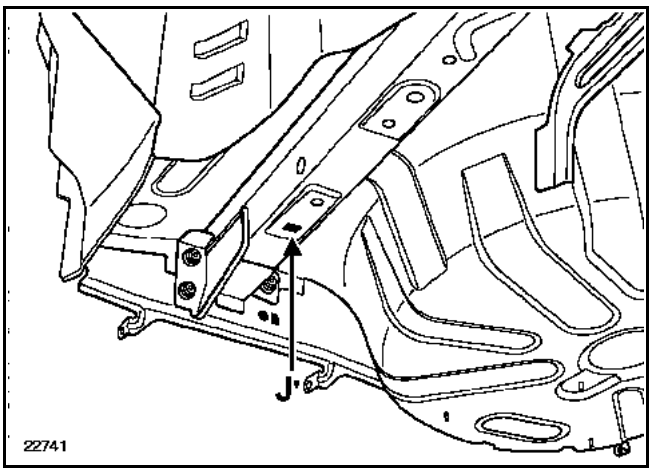

The bracket rests under the side member and is centred in the pilot hole.

It is used with the mechanical parts in place:
– for realigning the side member.

It is also used with the mechanical parts removed, in the same conditions, to replace the side member.

L - REAR END CROSS MEMBER

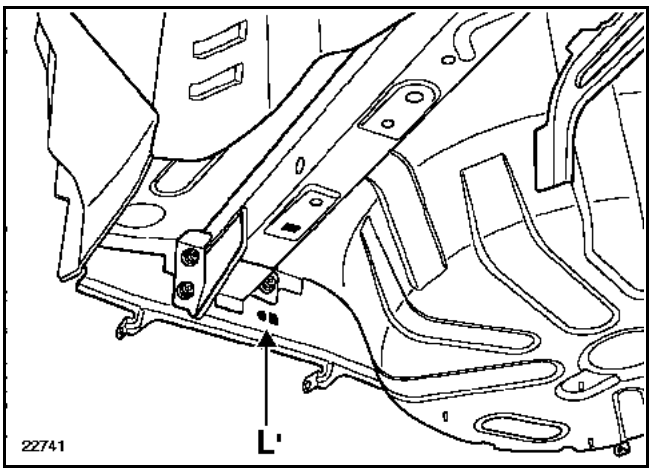

The bracket rests vertically against the rear end cross member, then is centred in the stamped area for securing the towing connection.

It is used for replacing the whole rear end, with or without mechanical units.

GETtheMANUALS.org

CELETTE

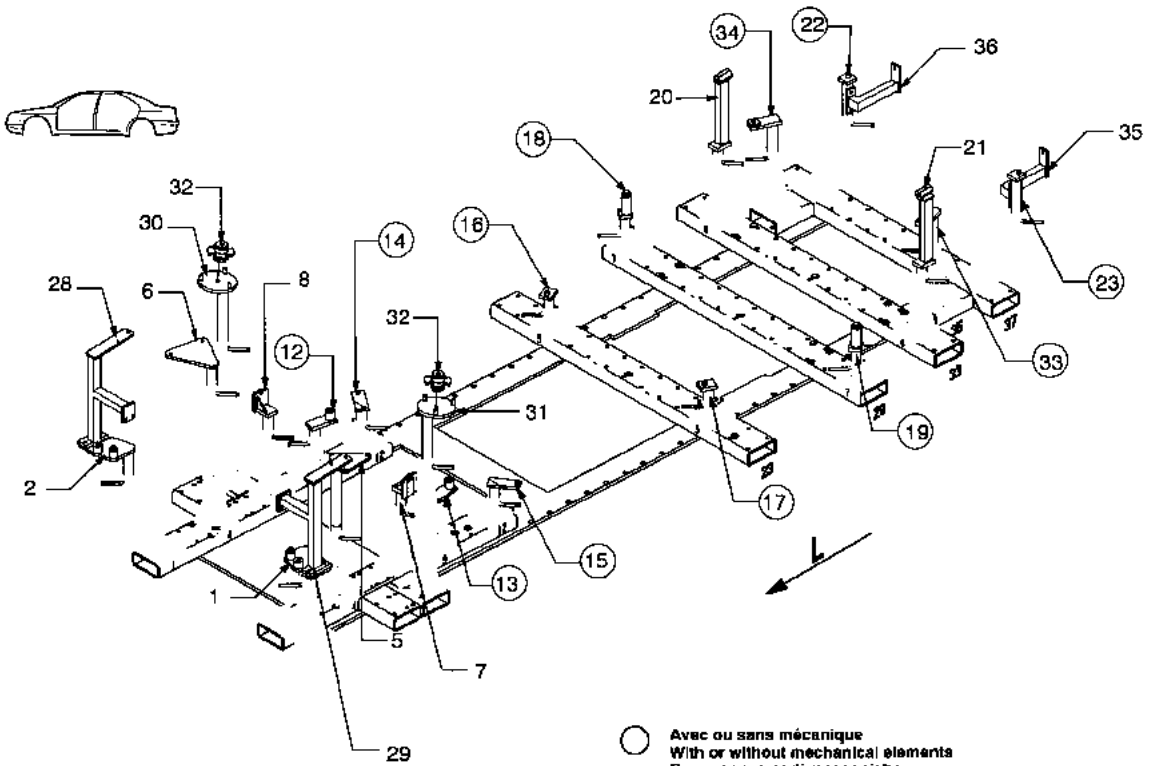

○ Avec ou sans mécanique
With or without mechanical elements
Con o senza parti meccaniche
Mit oder ohne Aggregate
Con ó sin mecanica desmontada

RENAULT

864.310		
21 Kg	19.10.2001	427-D 25J

Fiche 05B-1

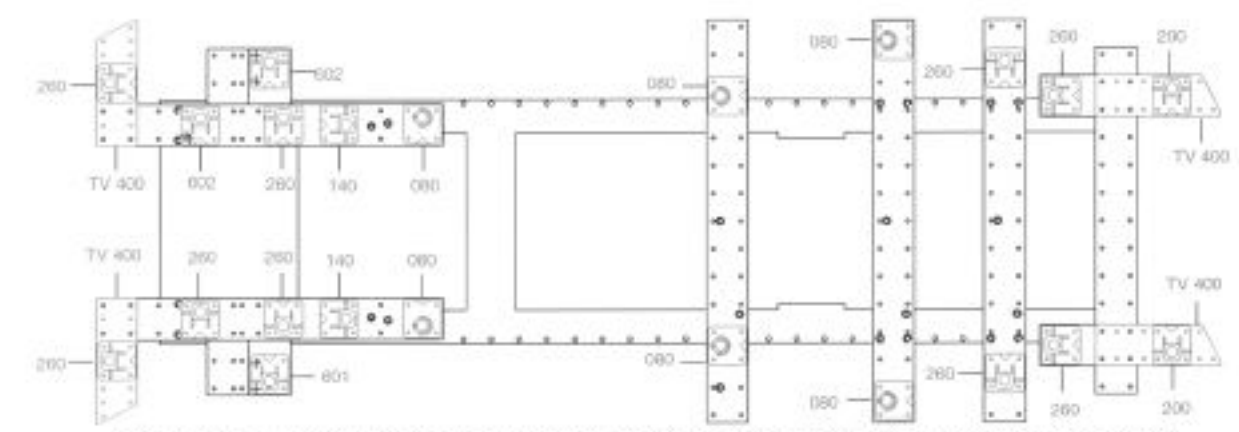

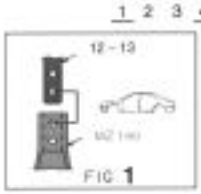

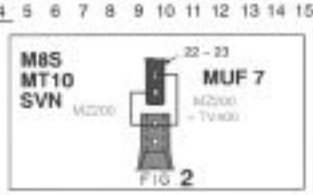

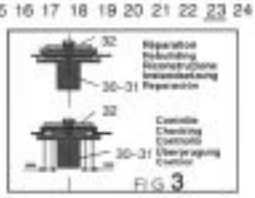

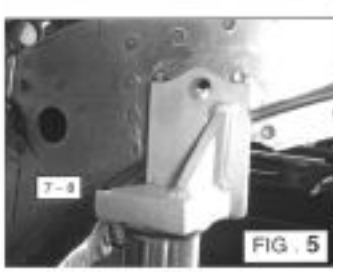

Fiche 05B-2

GETtheMANUALS.org

Blackhawk Instruction Card

1B

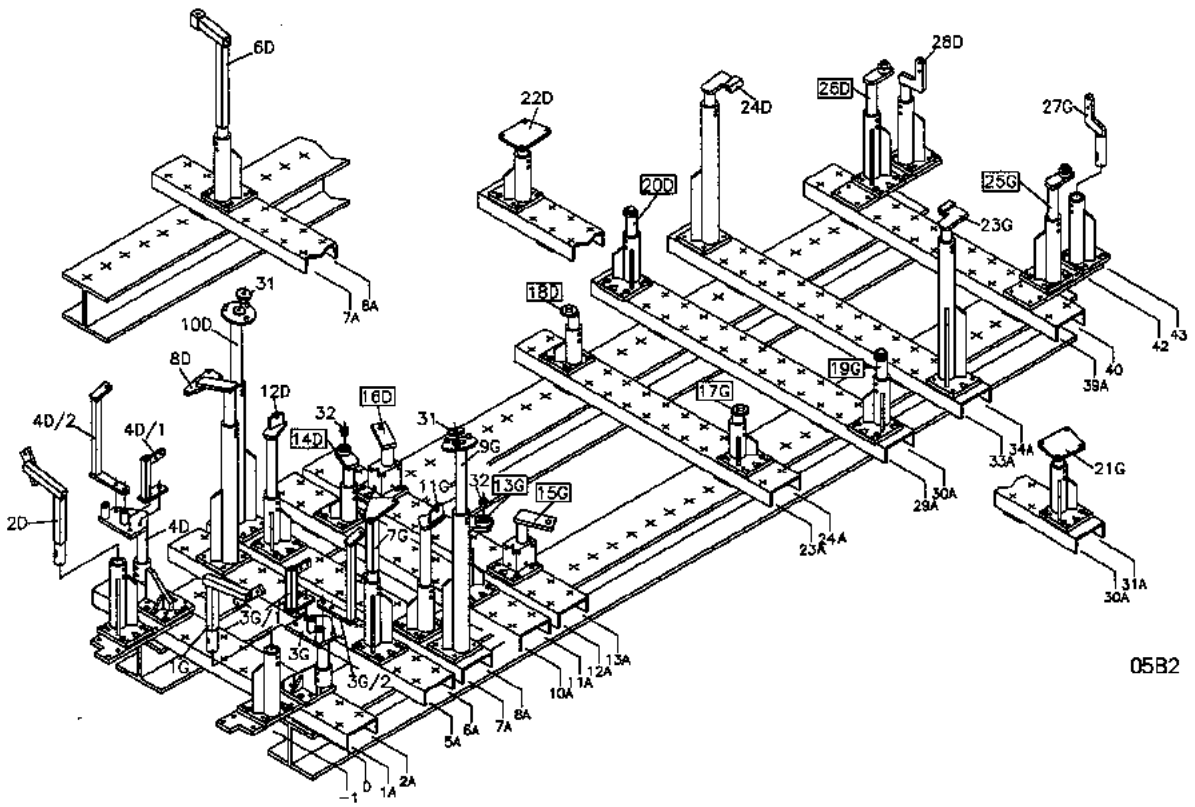

AVEC MECANIQUE/WITH MECHANICS/MIT MECHANIK/CON MECCANICA

3B

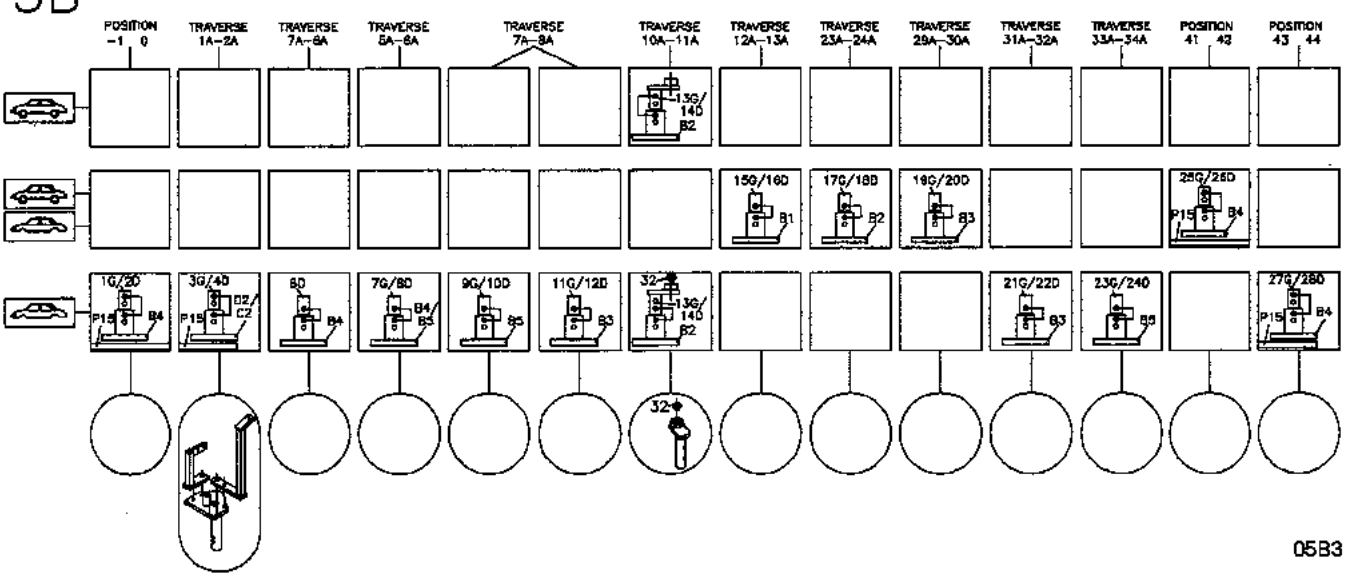

GETtheMANUALS.org

BLACKHAWK

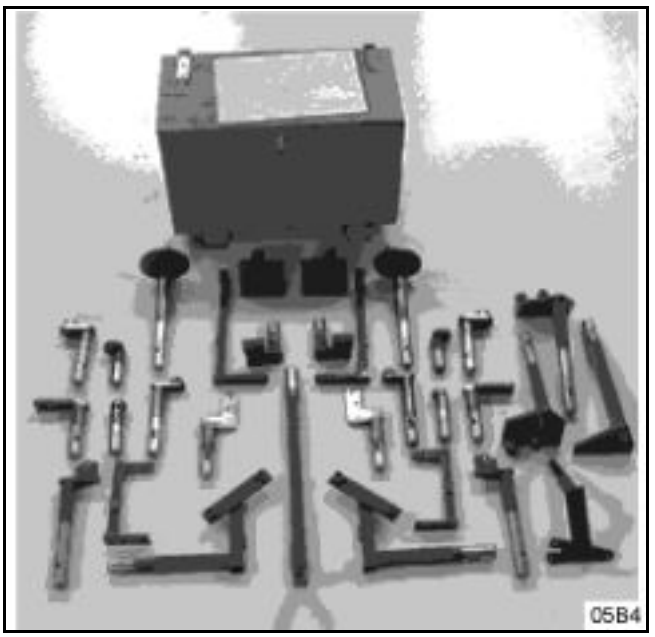

Special heads for **MS System**

Order from: BLACKHAWK
Centre Eurofret
Rue Rheinfeld
67100 STRASBOURG (France)

Supplier's part number: **REN 88 701**

supplements standard assembly **REN 88 700**

CELETTE

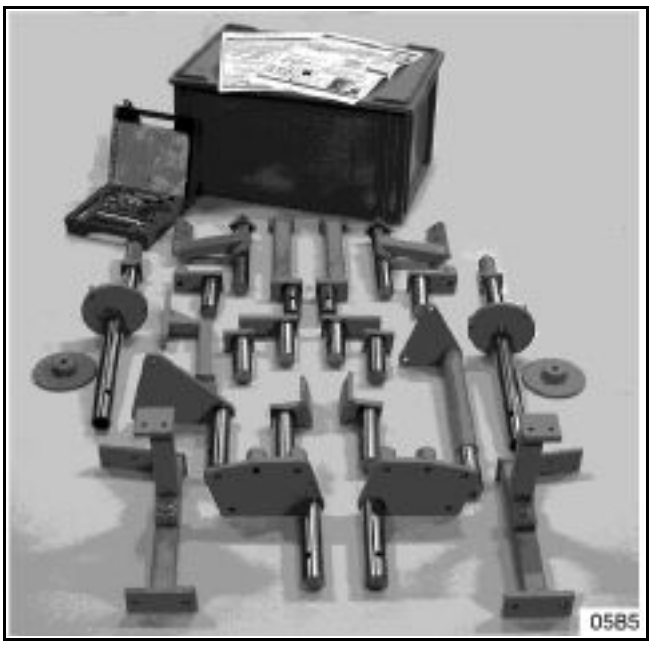

Special heads for **MZ System**

Order from: CELETTE S.A.
B.P.9
38026 VIENNE (France)

Supplier's part number: 864.309

supplements standard assembly: **864.300**

Complete assembly for LAGUNA II AND VEL SATIS: 864.310

GETtheMANUALS.org

The replacement of this part is a basic operation for a frontal impact.

The door is a removable component. It is part of case no. ① (see the introduction to **Section 40A-C: Description of parts**).

In the operation described below, there are only descriptions of the connections specific to the part concerned.

The information on the additional parts will be dealt with in their respective sections (refer to contents).

NOTE:
When the cross member only is being replaced, a bead of M.J. Pro mastic (**part number: 77 11 172 676**) must be applied at the join in order to ensure anti-corrosion protection of the connection face.

The part supplied by the Parts Store is black and does not need painting when fitted.

COMPOSITION OF THE REPLACEMENT PART

Part assembled with:
Front end cross member
Interior housings
Bumper mounting
Exterior housings
Mounting components
Towing hitch tapped ring
Headlight carrier panel mounting angle bracket

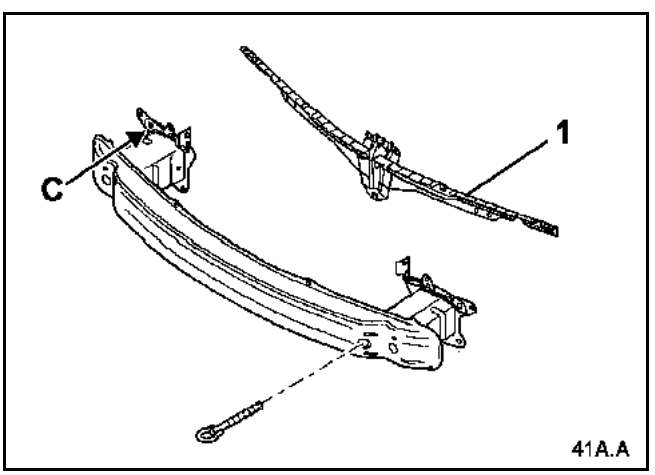

NOTE:
The bumper mounting bracket (1) is also available separately.

TIGHTENING TORQUES (in daNm)	▽
Cross member bolt A	3.5
Cross member bolt B	2.0

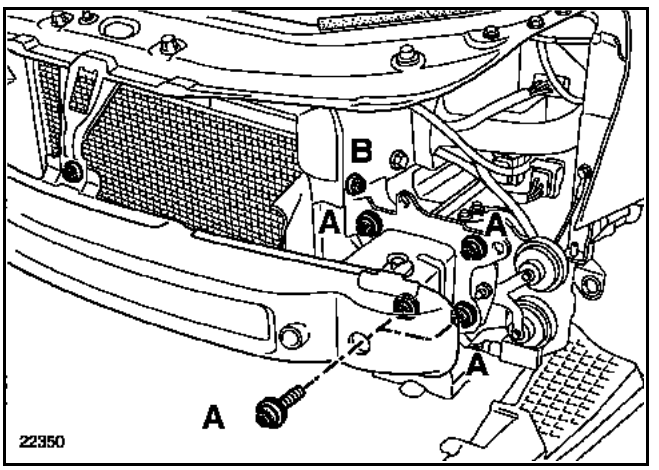

IMPORTANT:
Before any operation on the cross member, it is necessary to ease the engine away from its support points or to strap the ends of the side members so that they do not separate.

NOTE:
To make it easier to fit the cross member, it is advisable to remove the headlight carrier panels.

REMOVAL

Removal is carried out by removing the side mounting bolts (A) (four on each side) and the upper cross member mounting bolts (B).

REFITTING

IMPORTANT:
when positioning mounting bolts, it is easier to always start by positioning the pilot hole bolt C (located on the outer upper right-hand side).

The cross member contributes to the rigidity of the engine compartment structure. It is therefore essential to observe the tightening torques after carrying out any work.

GETtheMANUALS.org

The replacement of this part is a basic operation for a frontal impact to the lower section.

Case no. ① (see the introduction to **Section 40A-C: Description of parts**).

In the procedure described below, you will only find positions of the mountings specific to the component.

The information on the additional parts will be dealt with in their respective sections (refer to contents).

It is a removable component made of galvanized panels.

COMPOSITION OF THE REPLACEMENT PART

Part supplied on its own.

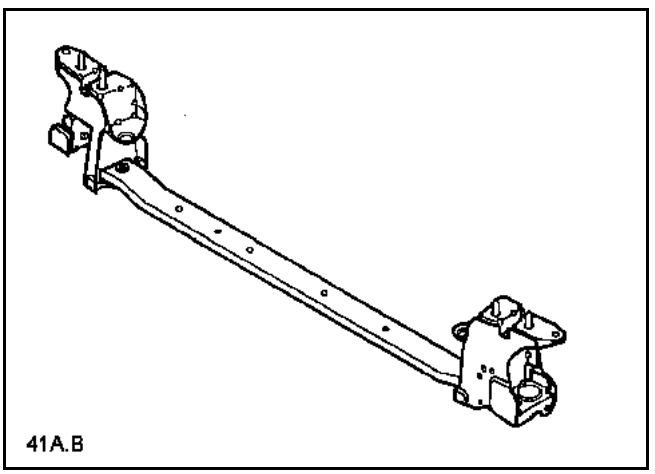

TIGHTENING TORQUE (in daNm)	▽
Cross member bolt	4.4

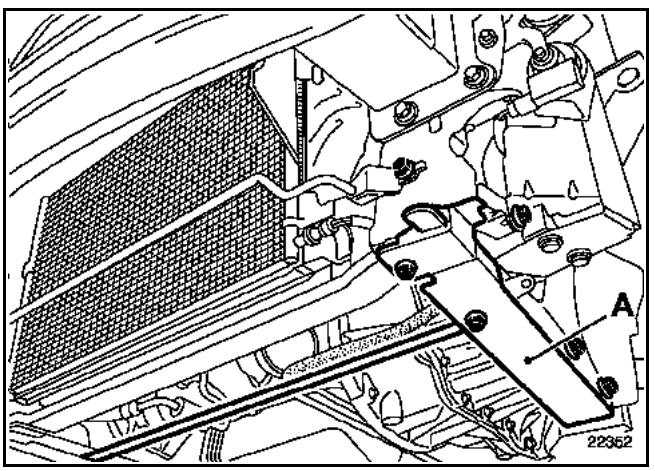

NOTE:
To access the cross member mountings, it is necessary to remove the following:
– the bumper,
– the engine undertray,
– both longitudinal cross members connecting the mounting (A),
– the radiator lower mountings,
– the air conditioning hose,
– the mounting unit.

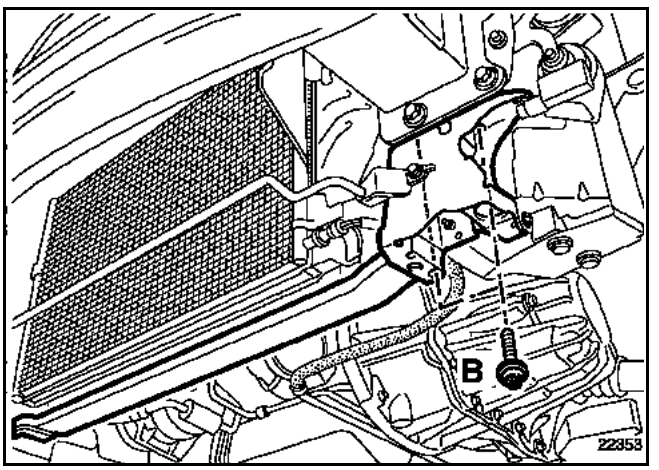

REMOVAL - REFITTING

Removal/refitting is carried out by removing/refitting bolts (B).

GETtheMANUALS.org

The replacement of this part is a complementary operation associated with the replacement of the front side member closure panel due to a frontal impact.

Case no. ① (see introduction to **section 40A-C: Description of parts**).

In the procedure described below, you will only find the descriptions and the joints which are specific to the part concerned.

The information on the additional parts will be dealt with in their respective sections (refer to contents).

NOTE:
The front end cross member must be used as a template for positioning the part.

COMPOSITION OF THE REPLACEMENT PART

Part assembled with:
Support plate
Crimped nuts

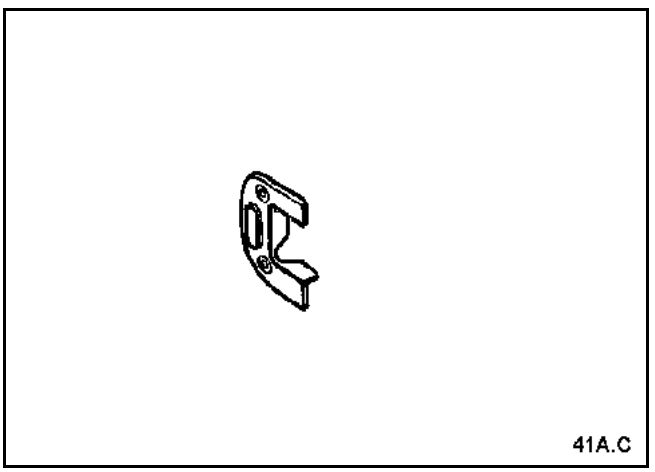

PARTS CONCERNED (thickness in mm):

1	Front end cross member mounting reinforcement	2.5
2	Front side member closure panel	1.5

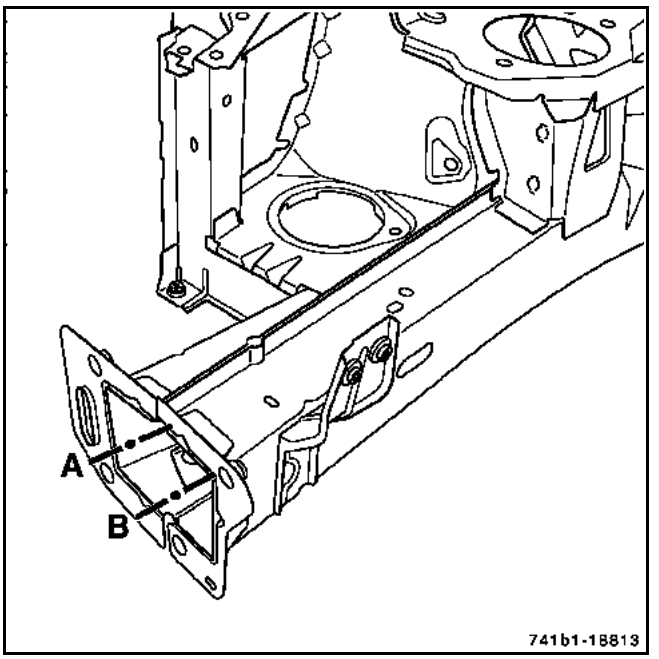

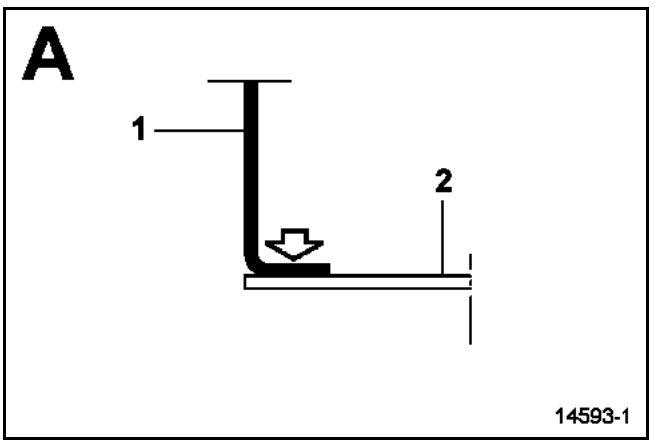

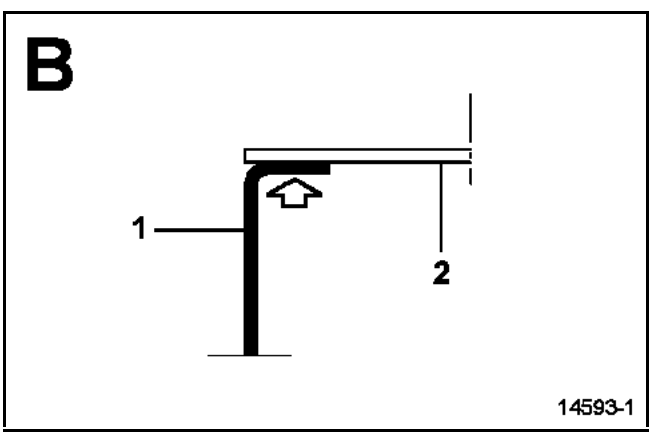

GETtheMANUALS.org

The replacement of this part is a complementary operation to the reinforcement of the front end cross member mounting and the wheel arch due to a front side impact.

Case no. ① (see the introduction to **Section 40A-C: Description of parts**).

In the procedure described below, you will only find descriptions of the connections which are specific to the part concerned.

The information on the additional parts will be dealt with in their respective sections (refer to contents).

To perform this operation, the front end cross member mounting reinforcement (1) must also be ordered.

This operation can be carried out in two possible ways:
– partially, using cut (a),
– or complete.

IMPORTANT:
The front side member closure panel consists of two panels of different thicknesses which are butt welded together.

Cut (a) is made just behind this line of butt weld.

It is essential to use the body jig bench when replacing this part.

COMPOSITION OF THE REPLACEMENT PART

Part assembled with:
Inner reinforcement
Closure panel components
Crimped nuts

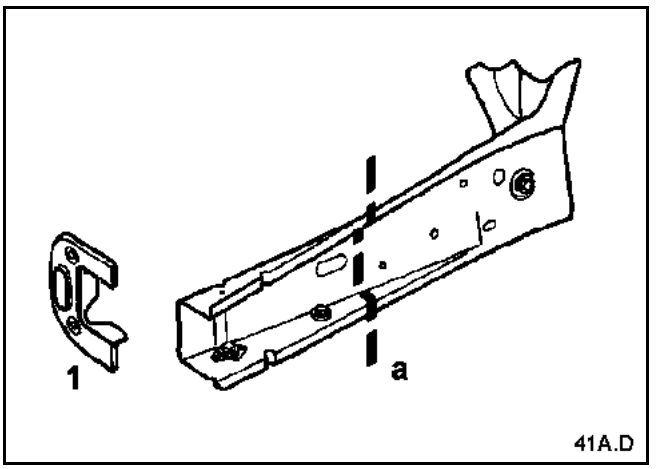

PARTS CONCERNED (thickness in mm):

1	Front section of front side member closure panel	1.5/2.5
2	Wheel arch	1.8

GETtheMANUALS.org

Replacement using cut a

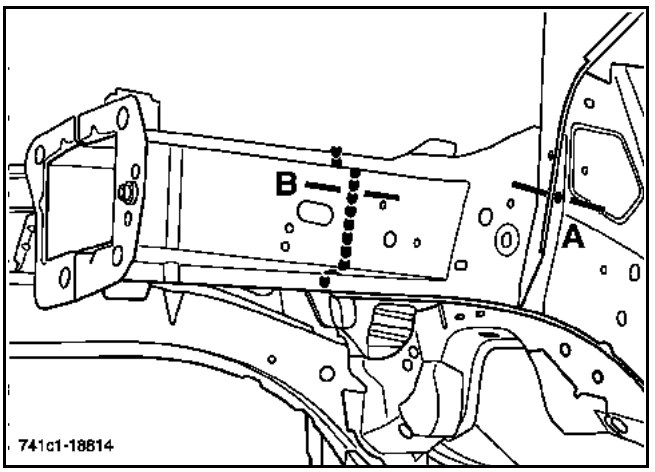

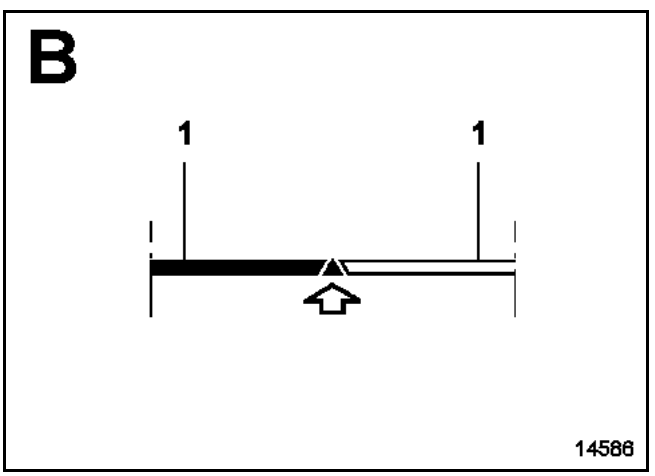

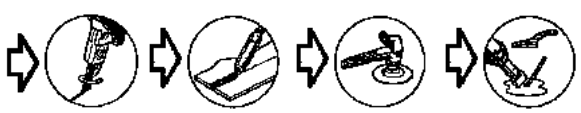

Complete replacement

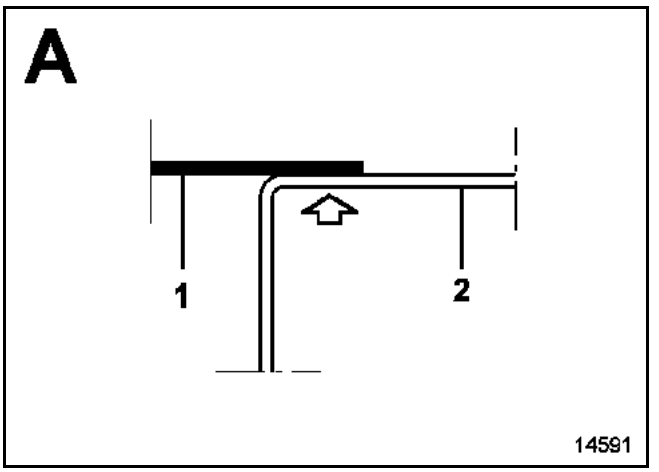

GETtheMANUALS.org

The replacement of this part is a complementary operation to the replacement of the front side member closure panel due to a frontal impact or the scuttle side panel due to a front side impact.

Cas n° ① (see the introduction to **Section 40A-C: Description of parts**).

In the procedure described below, you will only find the descriptions and the joints which are specific to the part concerned.

The information on the additional parts will be dealt with in their respective sections (refer to contents).

COMPOSITION OF THE REPLACEMENT PART

Part supplied on its own.

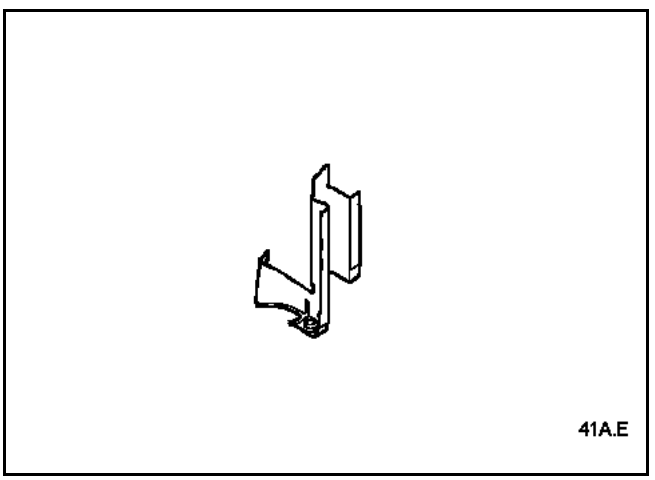

PARTS CONCERNED (thickness in mm):

1	Front end side cross member	1
2	Front side member closure panel	1.5

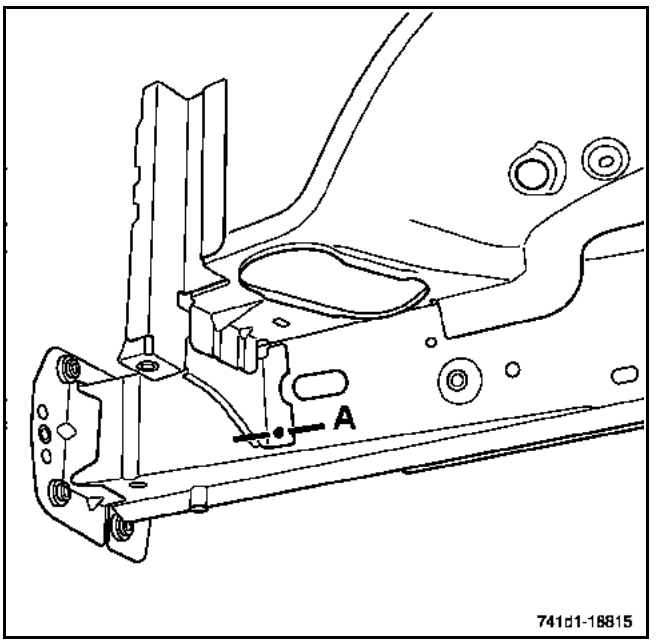

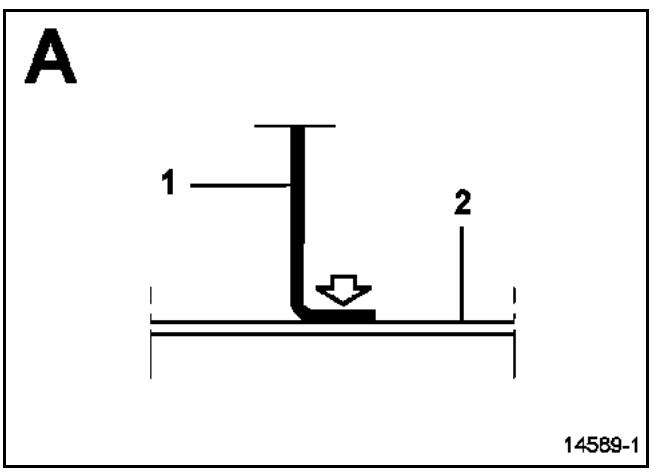

GETtheMANUALS.org

The replacement of this part is a complementary operation to the replacement of the front upper cross member following a frontal impact.

Cas n° ① (see the introduction to **Section 40A-C: Description of parts**).

In the procedure described below, you will only find the descriptions and the joints which are specific to the part concerned.

The front upper cross member must be used for positioning the part.

The information on the additional parts will be dealt with in their respective sections (refer to contents).

COMPOSITION OF THE REPLACEMENT PART

Part supplied on its own.

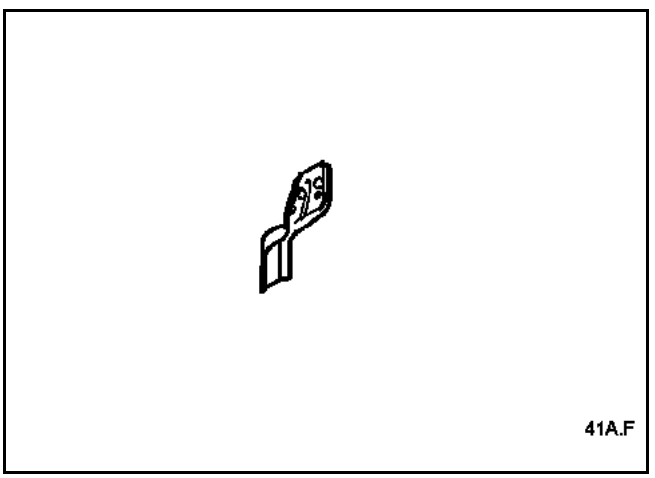

PARTS CONCERNED (thickness in mm):

1	Front upper cross member mounting element	1.5
2	Front side member	2

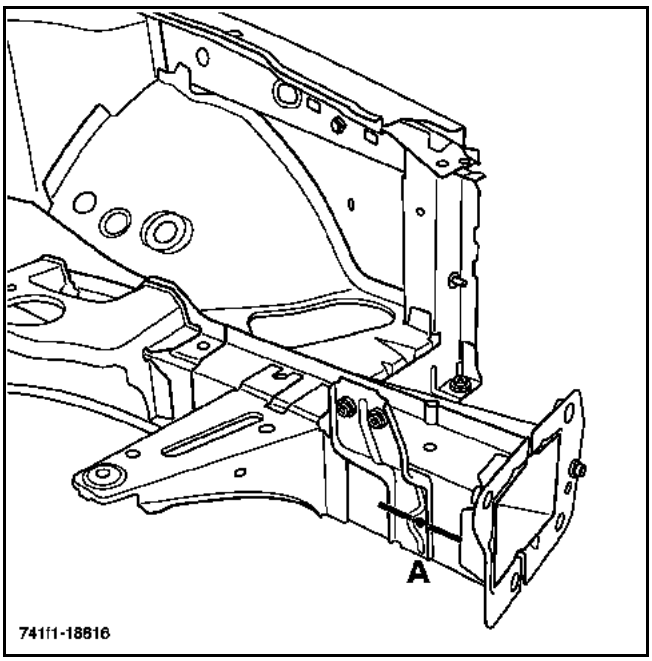

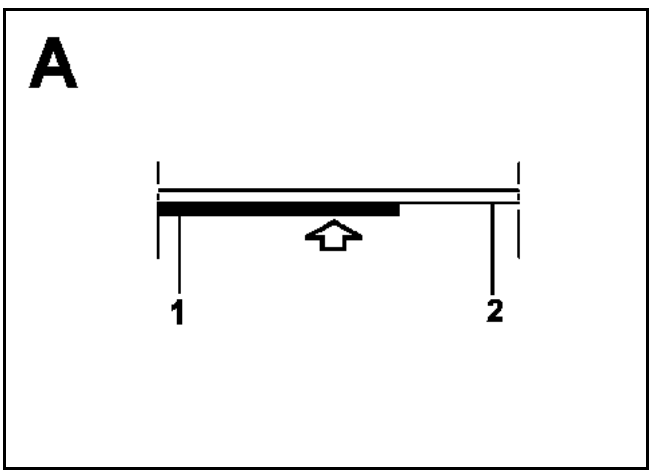

GETtheMANUALS.org

The replacement of this part is a complementary operation to the replacement of the front side member following a frontal impact.

Cas n° ① (see the introduction to **Section 40A-C: Description of parts**).

In the procedure described below, you will only find the descriptions and the joints which are specific to the part concerned.

The battery tray can be used as a template for positioning the part.

The information on the additional parts will be dealt with in their respective sections (refer to contents).

COMPOSITION OF THE REPLACEMENT PART

Part supplied on its own.

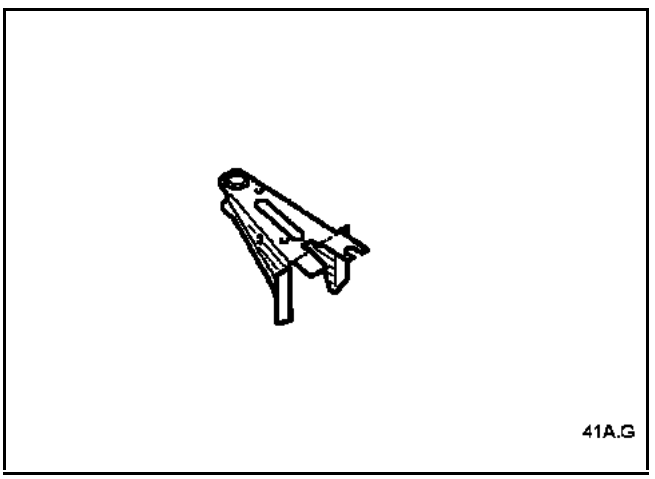

PARTS CONCERNED (thickness in mm):

1	Battery tray support	1.5
2	Front side member	2

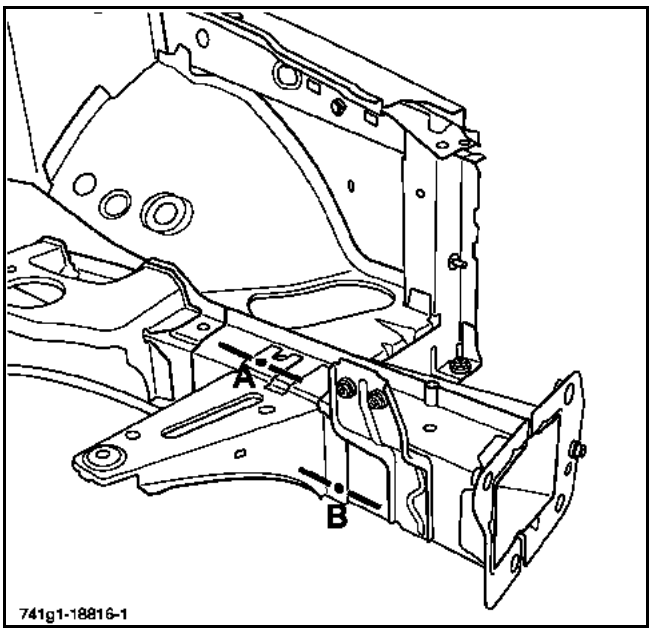

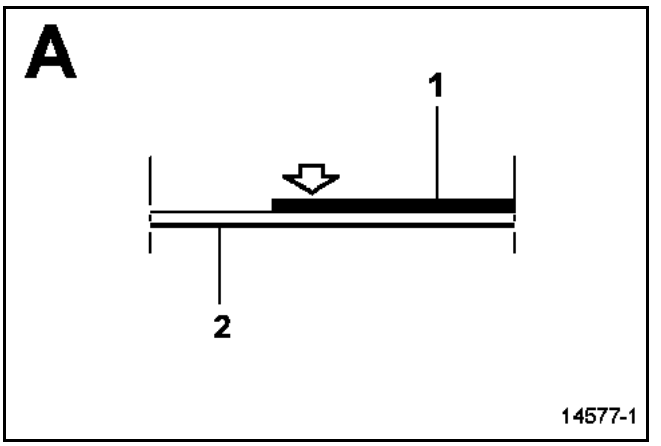

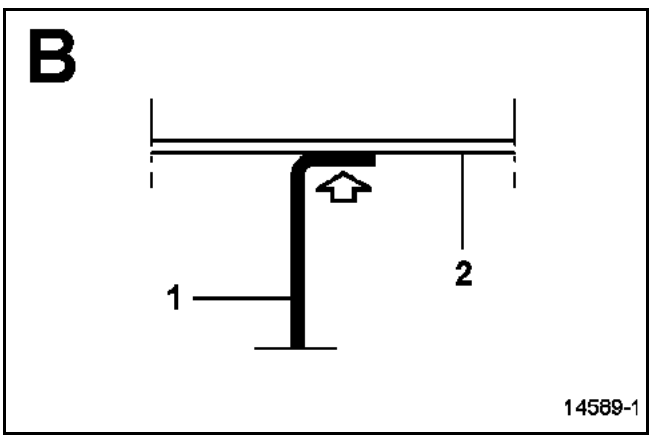

GETtheMANUALS.org

The replacement of this part is a complementary operation to the replacement of the front end cross member mounting reinforcement and the wheel arch, front section, following a frontal impact.

Cas n° ① (see the introduction to **Section 40A-C: Description of parts**).

In the procedure described below, you will only find the descriptions and the joints which are specific to the part concerned.

The information on the additional parts will be dealt with in their respective sections (refer to contents).

This operation can be carried out in two possible ways:
– partially, using cut (a),
– or complete.

The body jig bench must be used.

COMPOSITION OF THE REPLACEMENT PART

Part assembled with:
Side member reinforcement
Engine mounting
Cross member support
Gearbox mounting (LH side)
Battery support (LH side)
Inner reinforcement
Impact arm
Sub-frame mounting spacer
Centring device
Captive nut

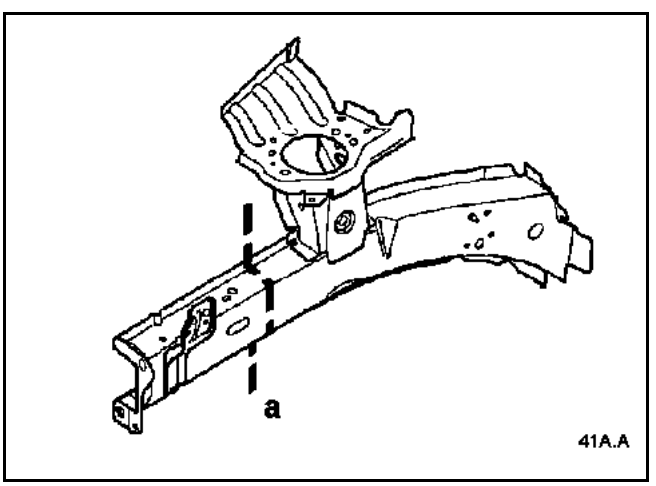

PARTS CONCERNED (thickness in mm):

1	Front side member	1.8
2	Side member reinforcement	2
3	Engine mounting	2.5
4	Wheel arch, front section	0.8
5	Scuttle side panel	1.2/2
6	Wheel arch	2
7	Engine support reinforcement	1.5
8	Side member closure panel	1.5/2.5
9	Front side member, central section	4
10	Wheel arch, rear section	1
11	Central floor, side section	1.2/0.8
12	Tunnel stiffener	1.2
13	Front side cross member	1.5

GETtheMANUALS.org

Replacement using cut a

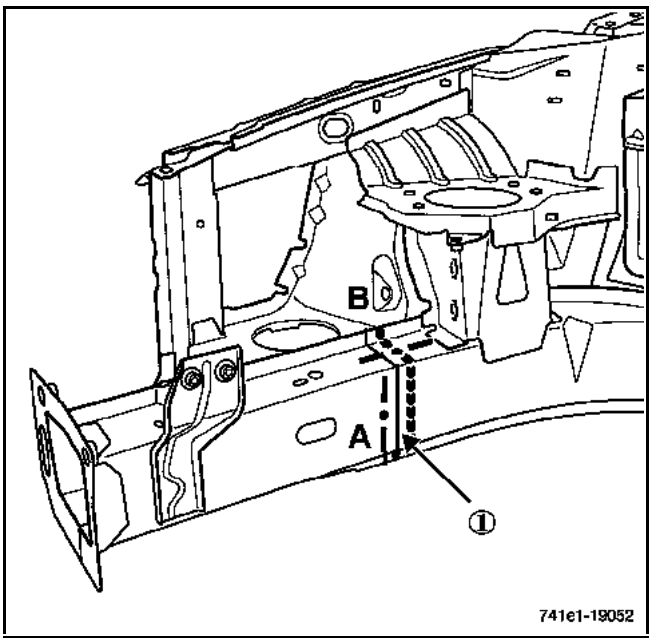

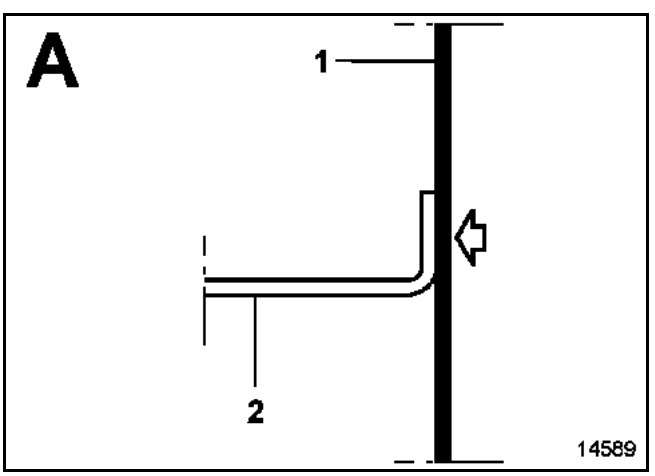

NOTE:
Take care to protect reinforcement (2) during the operation.

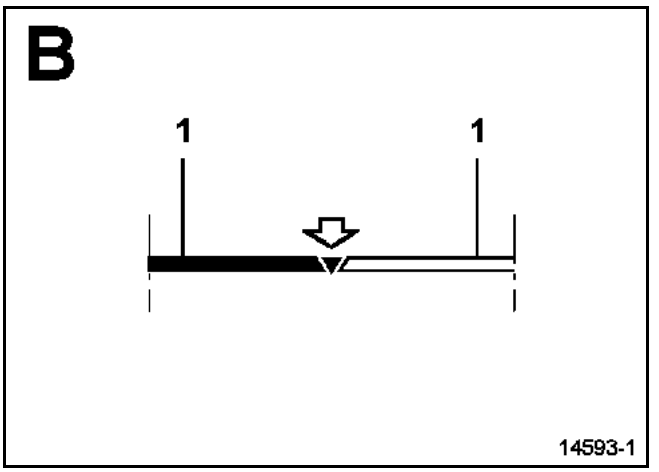

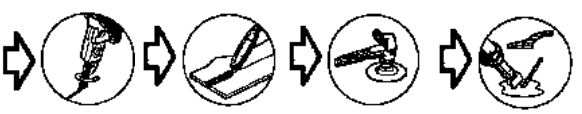

IMPORTANT: the cut is made behind the butt weld line ①.

GETtheMANUALS.org

Complete replacement

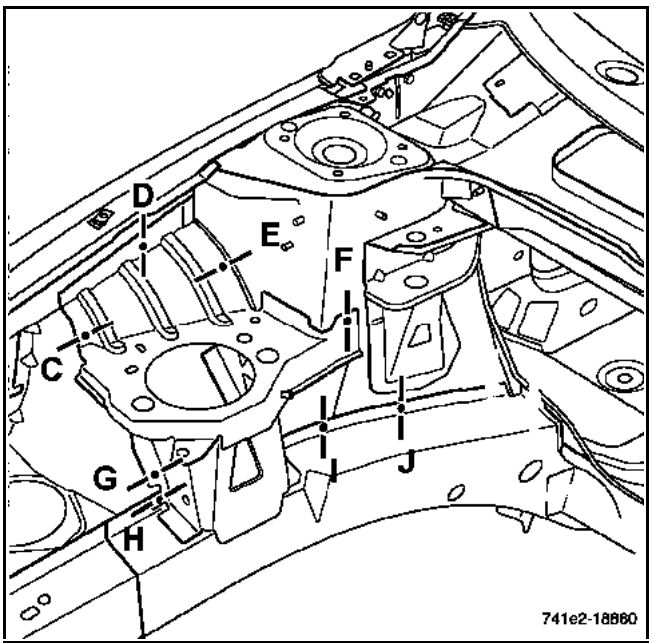

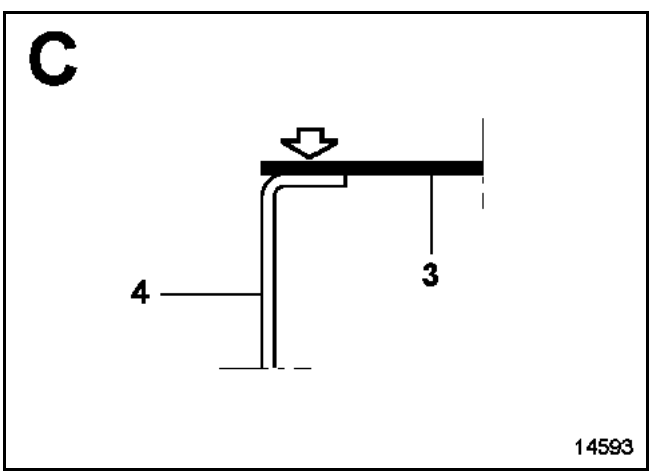

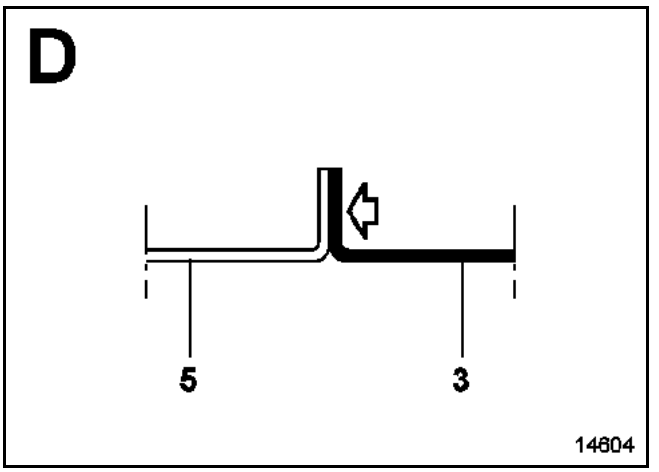

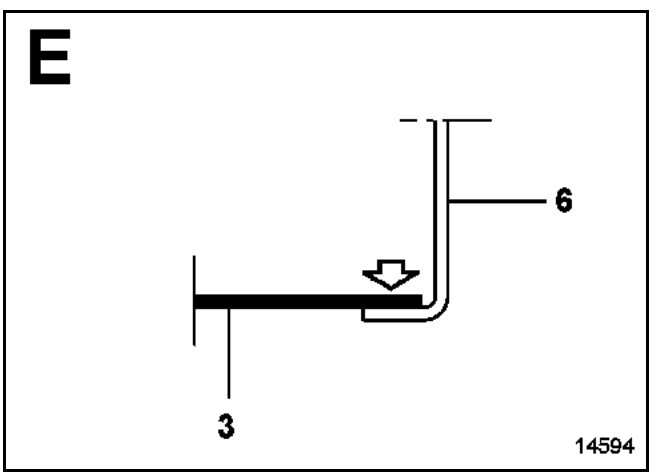

GETtheMANUALS.org

F

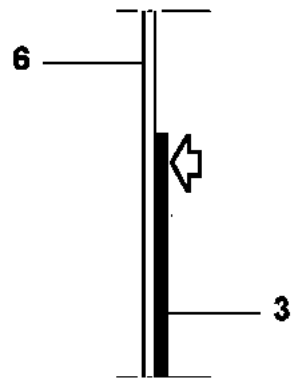

G

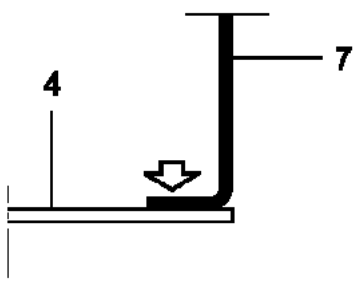

H

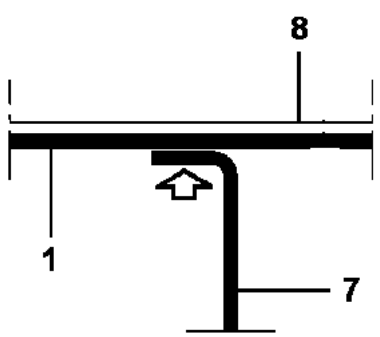

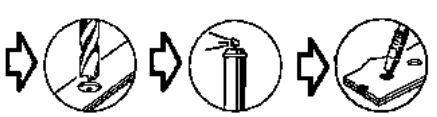

I

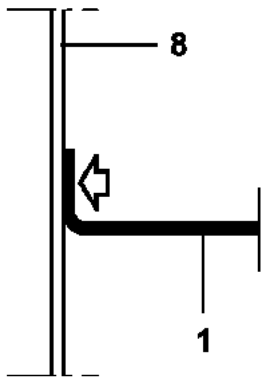

J

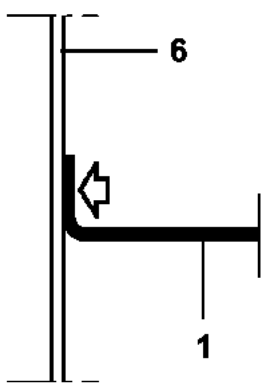

GETtheMANUALS.org

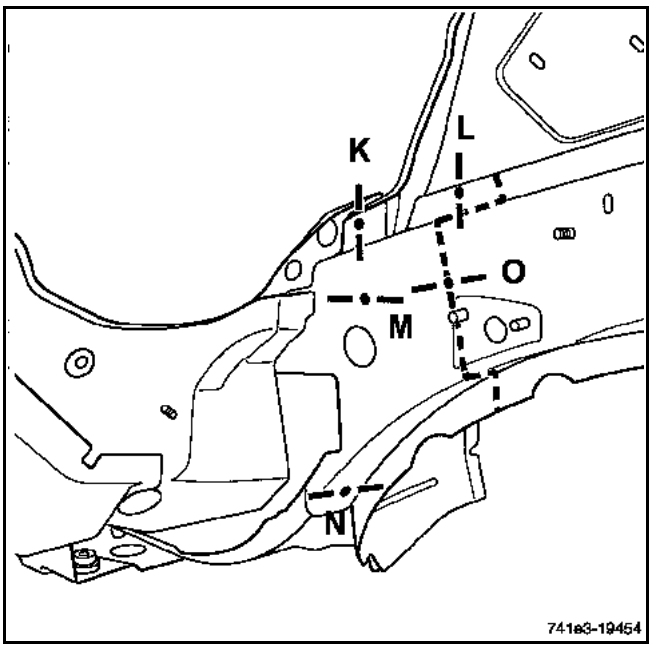

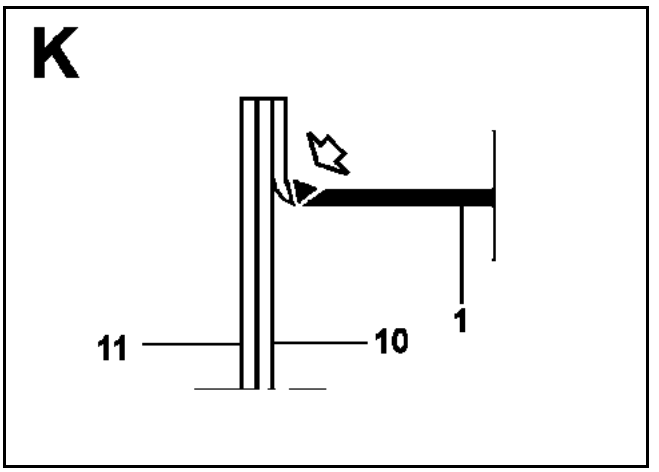

IMPORTANT:
The spot welds on section (K) must be saved to avoid having to remove the pedal support (bonded) A cut-out must be made in the panel return angle (see section K). This operation is also to be performed on the replacement part.

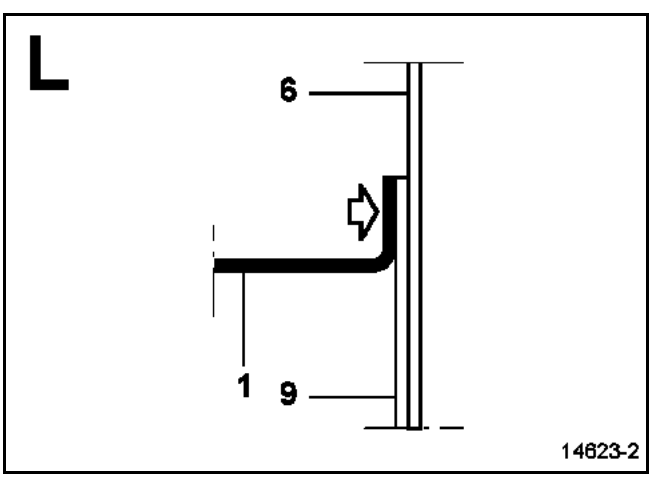

GETtheMANUALS.org

M

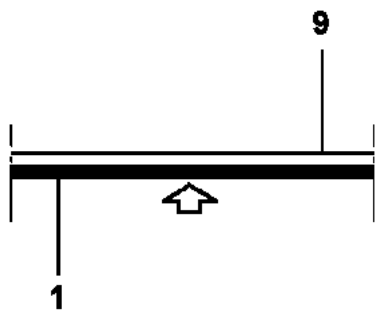

14576

N

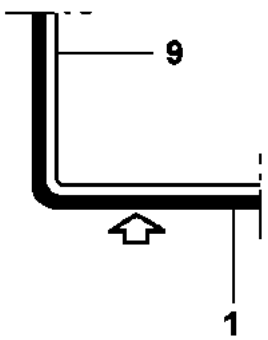

14602-1

O

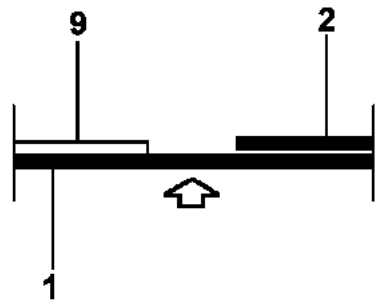

19521.3

NOTE:
This cut-out is required to facilitate the removal of the previous welds.
This is made between side member reinforcement (2) and the front side member, central section (9).

GETtheMANUALS.org

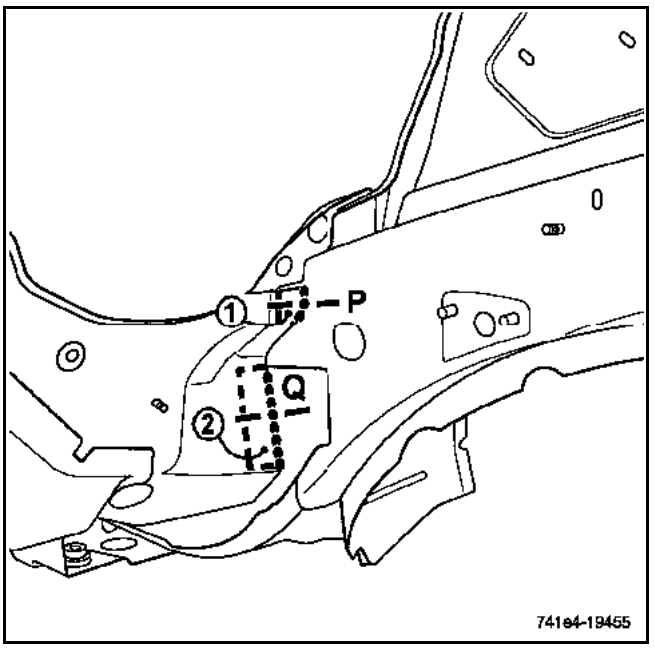

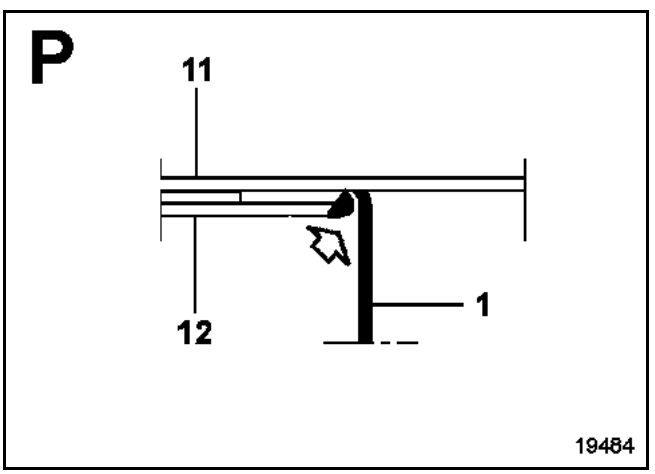

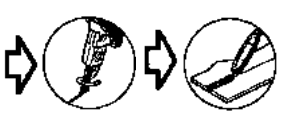

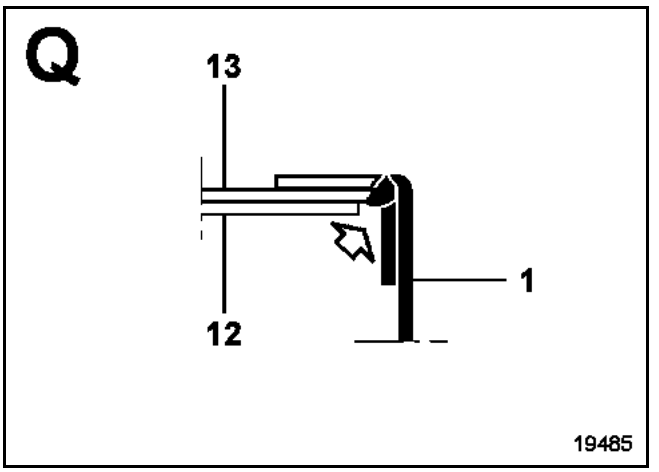

IMPORTANT:
Cutting out the two panel returns ① and ② to remove the side member.
These operations are also to be performed on the replacement side member to enable a weld bead to be applied as shown on the diagram.

GETtheMANUALS.org

The replacement of this part is a complementary operation to the replacement of the scuttle side panel following a front side impact.

Cas n° ② (see the introduction to **Section 40A-C: Description of parts**).

This operation can be carried out in two possible ways:
– partially, using cut (a),
– or complete.

The information on the additional parts and connections specific to the part have already been dealt with in their appropriate sections (see Contents).

The body jig bench must be used.

COMPOSITION OF THE REPLACEMENT PART

Part assembled with:
Side member
Shock absorber cup
Side member closure panel
Wheel arch
Welded studs
Inner reinforcement
Closure panel component
Crimped nuts
Side member reinforcement
Engine mounting
Cross member support
Gearbox mounting (LH side)
Battery support (LH side)
Inner reinforcement
Impact arm
Sub-frame mounting spacer
Centring device

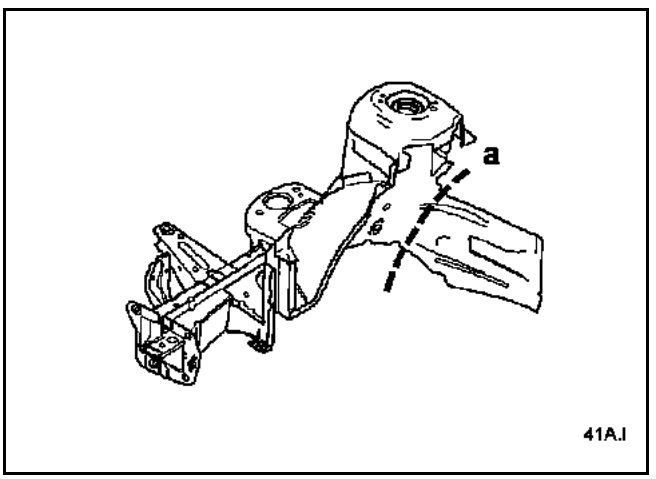

GETtheMANUALS.org

The replacement of this part is an operation linked to the replacement of the tunnel reinforcement for a front side impact.

Cas n° ① (see the introduction to **Section 40A-C: Description of parts**).

In the procedure described below, you will only find the descriptions and the joints which are specific to the part concerned.

The information on the additional parts will be dealt with in their respective sections (refer to contents).

COMPOSITION OF THE REPLACEMENT PART

Part assembled with:
Crimped nut

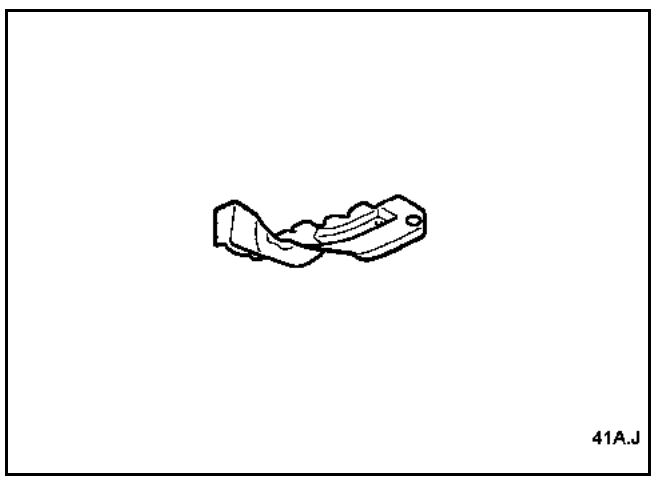

PARTS CONCERNED (thickness in mm):

1	Sub-frame mounting unit	1.5
2	Tunnel stiffener	1.2
3	Tunnel	1.2

GETtheMANUALS.org

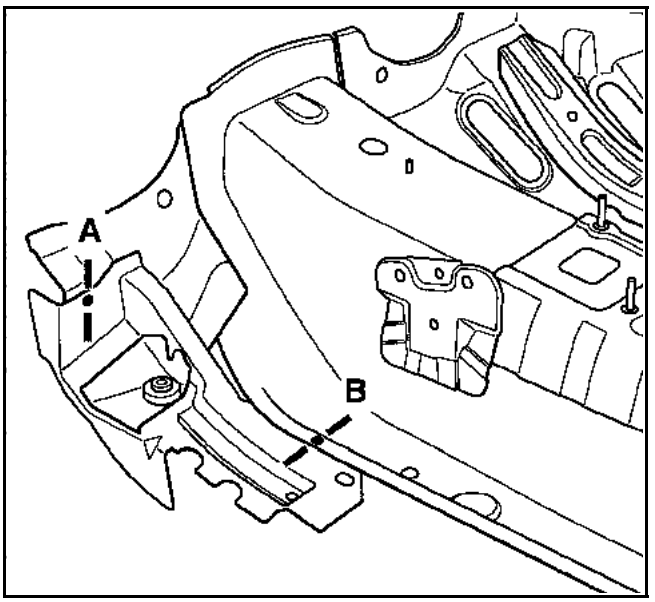

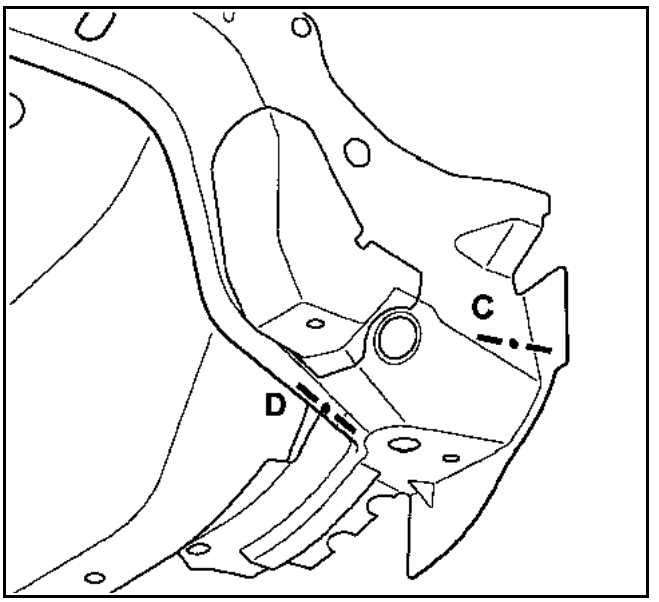

A

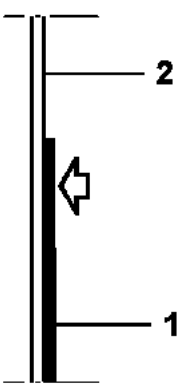

14577-1

C

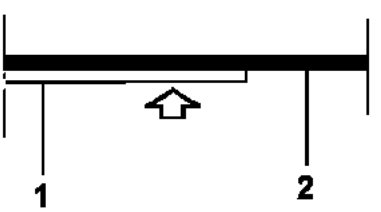

14577

B

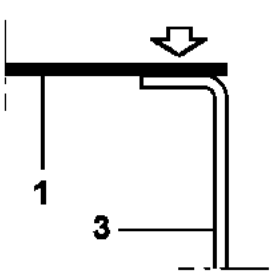

14577-1

D

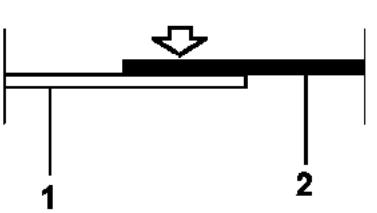

14579

GETtheMANUALS.org

The replacement of this part is an operation linked to the replacement of the central part of the front side member following a front side impact.

Cas n° ① (see the introduction to **Section 40A-C: Description of parts**).

In the procedure described below, you will only find the descriptions and the joints which are specific to the part concerned.

The information on the additional parts will be dealt with in their respective sections (refer to contents).

COMPOSITION OF THE REPLACEMENT PART

Part assembled with:
Anti-burst
Weld nut

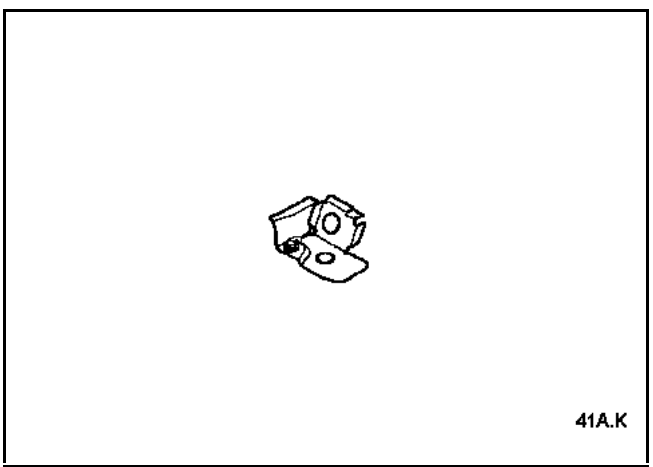

PARTS CONCERNED (thickness in mm):

1	Sub-frame mounting unit reinforcement	2
2	Front side member, central section	4
3	Central floor, side section	1.2/0.8
4	Front side cross member	1.5

GETtheMANUALS.org

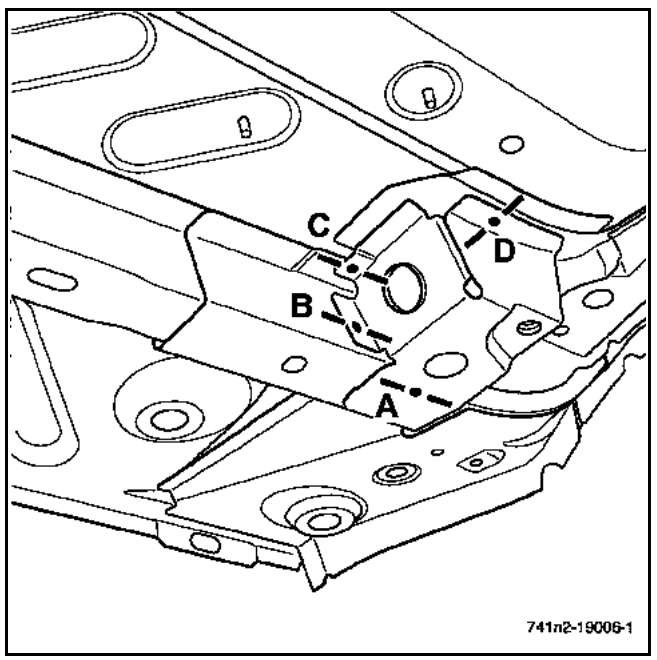

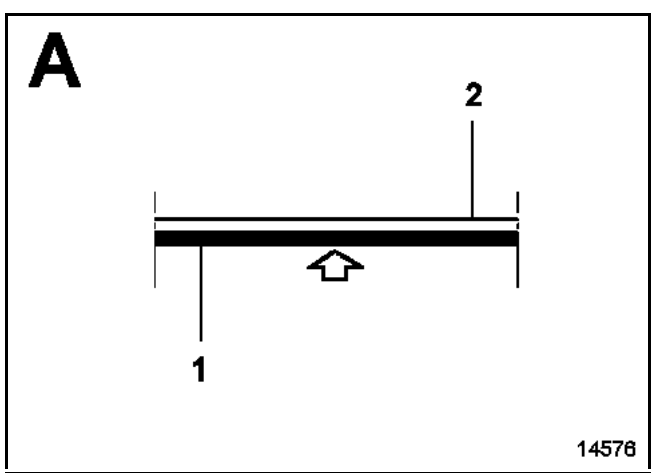

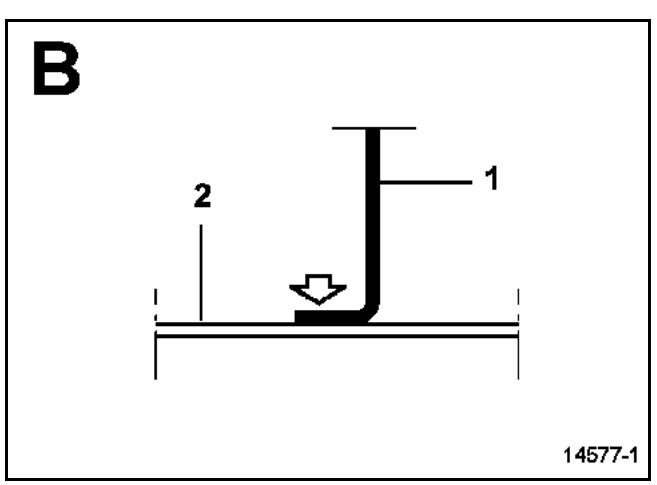

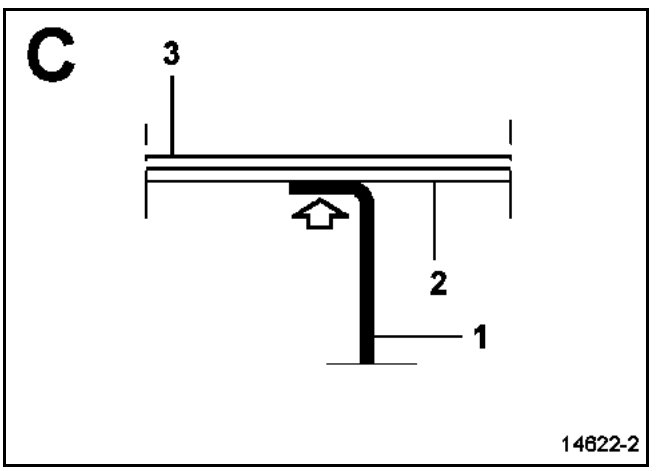

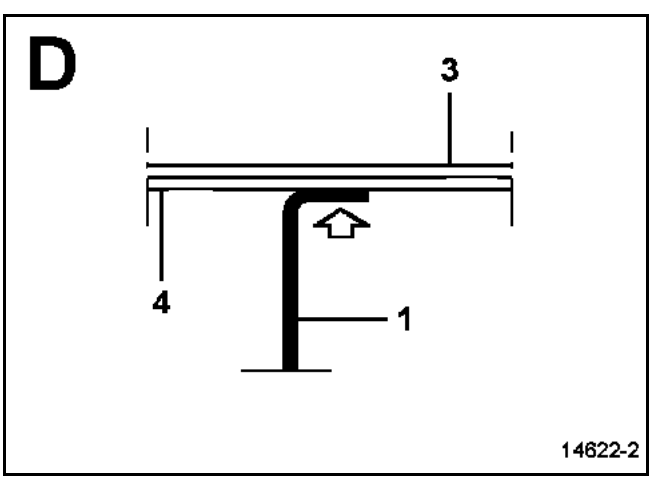

GETtheMANUALS.org

The replacement of this part is a complementary operation to the replacement of a front half unit, or the side section of the central floor following a front side impact.

Cas n° ① (see the introduction to **Section 40A-C: Description of parts**).

The information on the additional parts and connections specific to the part have already been dealt with in their appropriate sections (see Contents).

Below are two views of the part in its correct position, for information.

IMPORTANT:
All welds must be performed using plug welding (part thickness: 4 mm).

The body jig bench must be used.

COMPOSITION OF THE REPLACEMENT PART

Part supplied on its own.

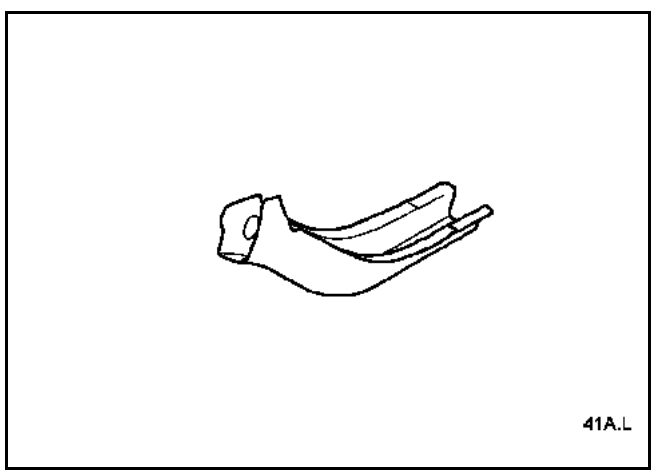

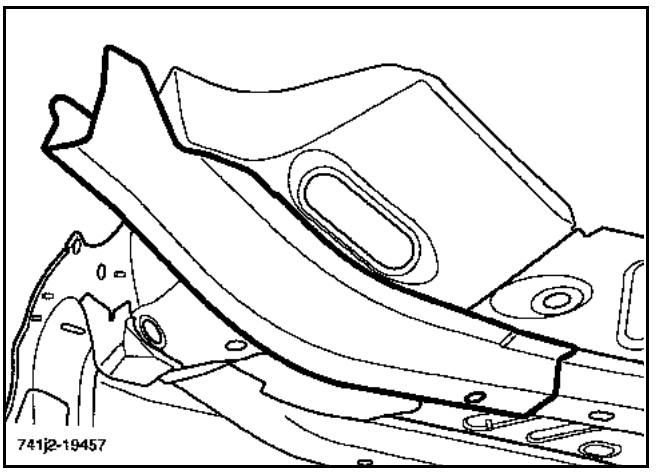

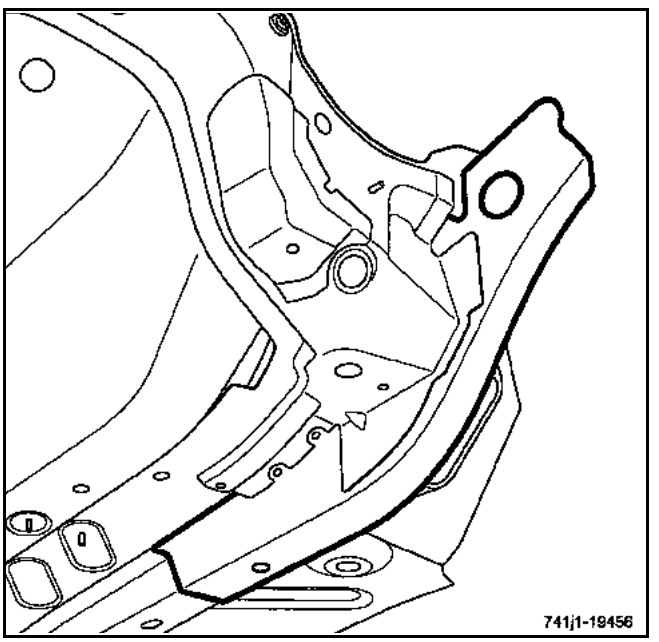

GETtheMANUALS.org

The replacement of this part is an operation linked to the replacement of the rear section of the floor following a side impact.

Cas n° ① (see the introduction to **Section 40A-C: Description of parts**).

The information on the additional parts will be dealt with in their respective sections (refer to contents).

To perform this operation, the After Sales foam rear plug must also be ordered (1).

This operation may be carried out in two ways (refer to the procedure below):
– using cut (a).
– complete if the operation is complementary to the central section of the front side member.

In the procedure described below, you will only find the descriptions and the joints which are specific to the part concerned.

NOTE:
All welds must be performed using plug welding.

The body jig bench must be used.

COMPOSITION OF THE REPLACEMENT PART

Assembled part with inner stiffener.

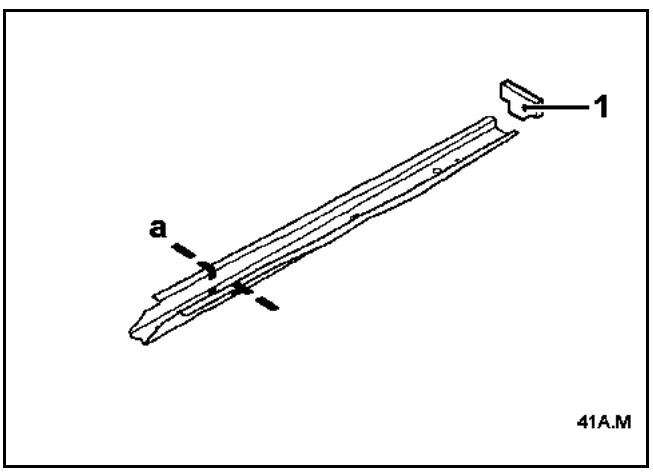

PARTS CONCERNED (thickness in mm):

1 Front side member, rear section 2

GETtheMANUALS.org

Replacement using cut a

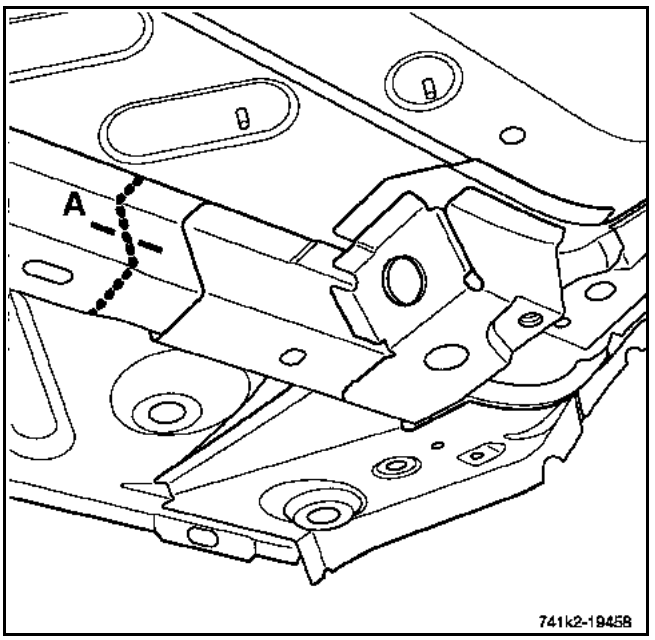

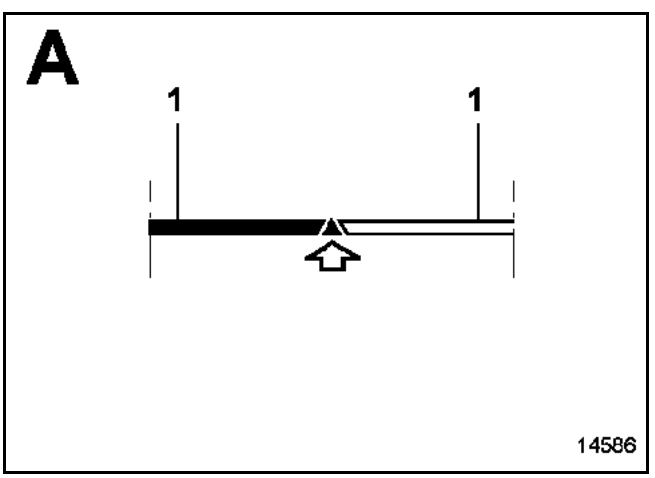

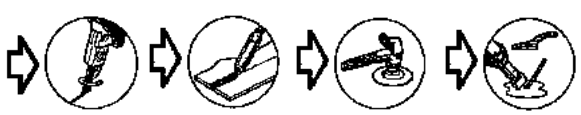

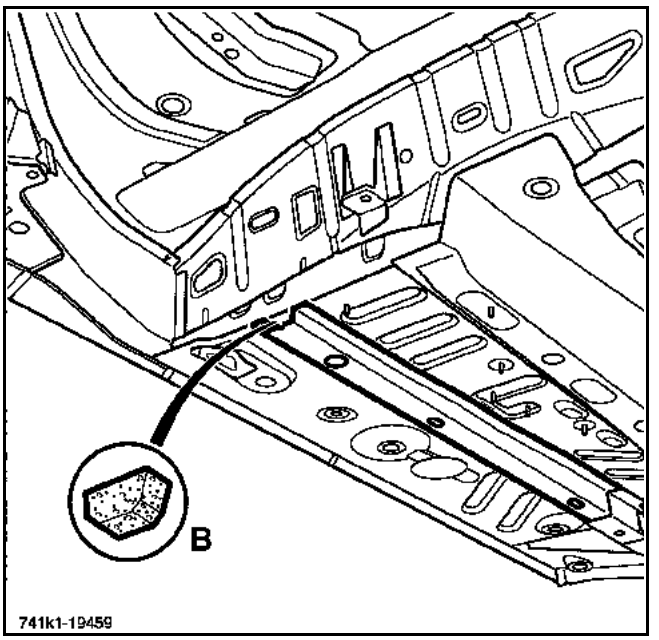

REMINDER:
the original expanding insert must be replaced with the after-sales foam blanking piece (B) part no.:
77 01 206 889.

GETtheMANUALS.org

The replacement of this part is a complementary operation to the replacement of the sill panel closure panel for a side impact.

Cas n° ① (see the introduction to **Section 40A-C: Description of parts**).

In the procedure described below, you will only find the descriptions and the joints which are specific to the part concerned.

The information on the additional parts will be dealt with in their respective sections (refer to contents).

This operation may be carried out in two ways (refer to the procedure below):
– using cut (a).
– or complete.

NOTE:
For a replacement along cut (a) which is performed by overlapping panels, the number of plug welds is not specified in the procedure.
A distance of approximately **60 mm** must be used between the welds.

STRUCTURE OF THE REPLACEMENT PART (see special note at the end of the operation)

Part assembled with:
Brake pipe support

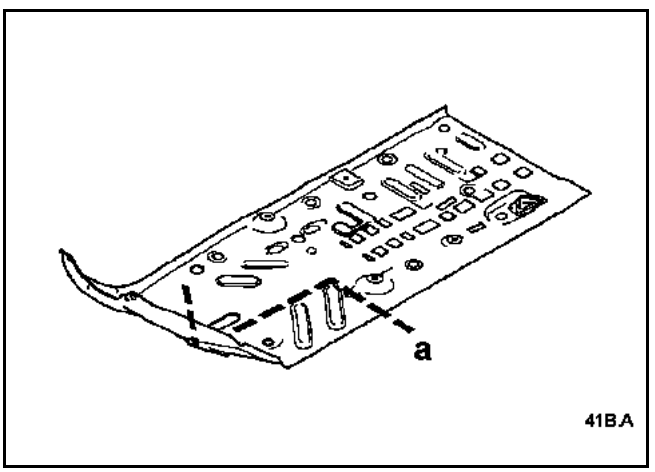

PARTS CONCERNED (thickness in mm):

1	Central floor, side section	1.2/0.8
2	Wheel arch, rear section	1
3	Wheel arch	2
4	Sub-frame mounting unit	1.5
5	Front side member	1.8
6	Front side cross member	1.5
7	Tunnel stiffener	1.2
8	Tunnel	1.2
9	Front side member, rear section	2
10	Rear floor front cross member closure panel	1
11	Rear floor front cross member	1.2
12	Handbrake pipe mounting	0.8

GETtheMANUALS.org

Replacement using cut a

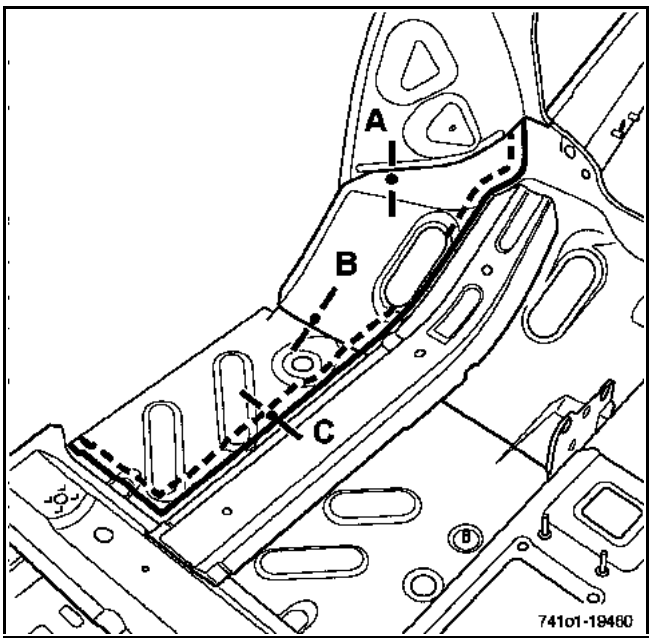

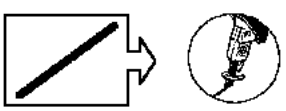
on replacement part

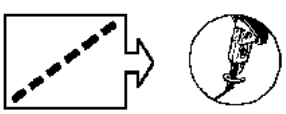
on the vehicle

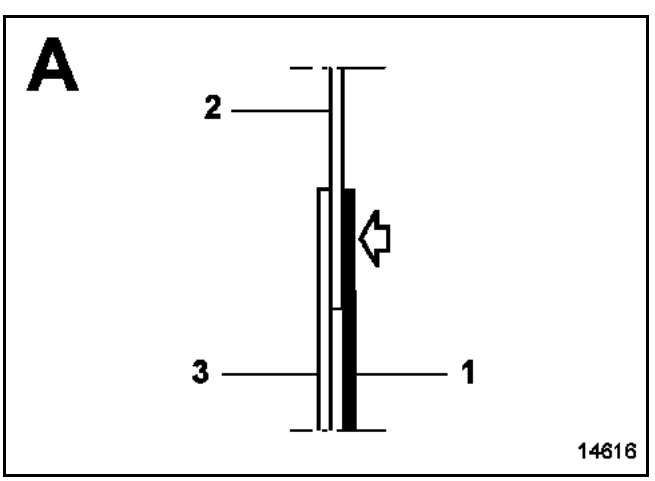

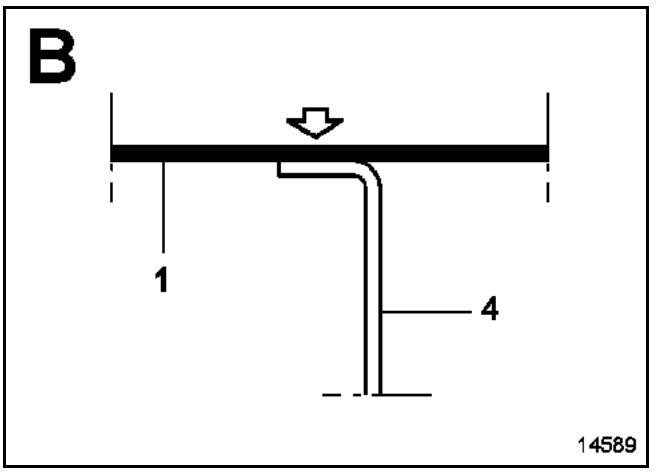

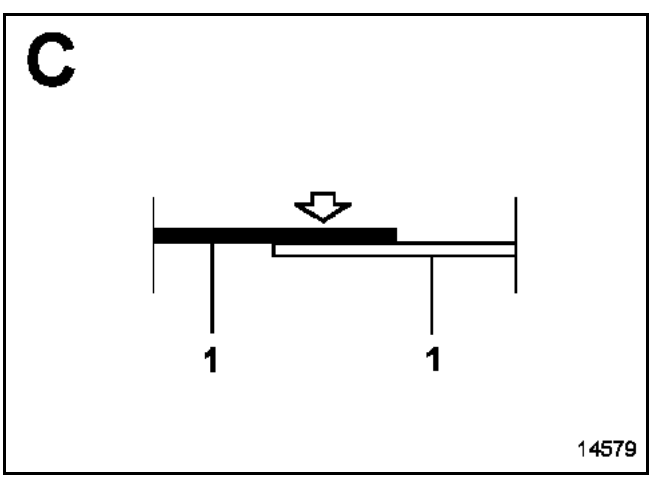

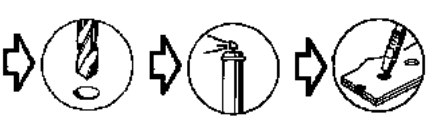

GETtheMANUALS.org

Complete replacement

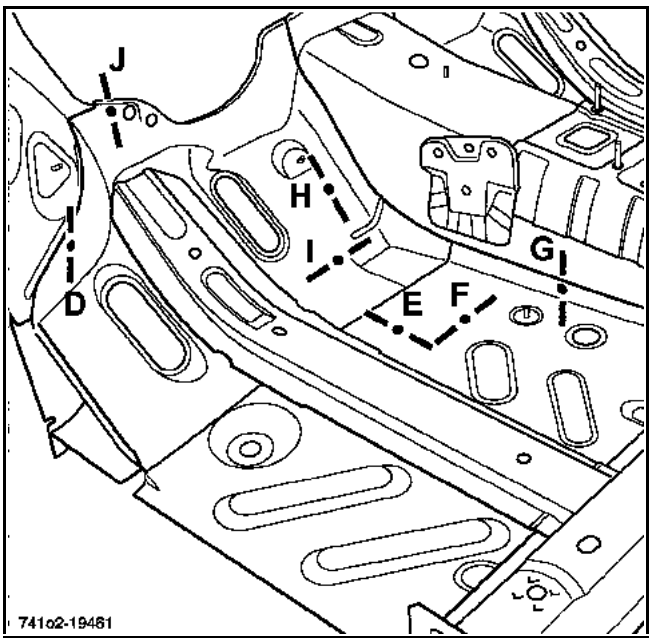

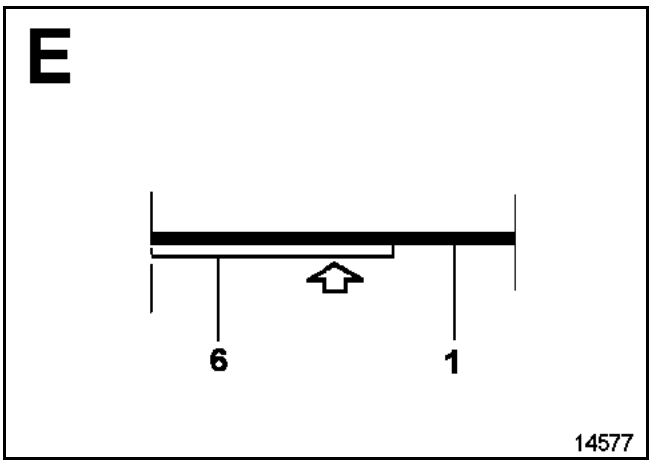

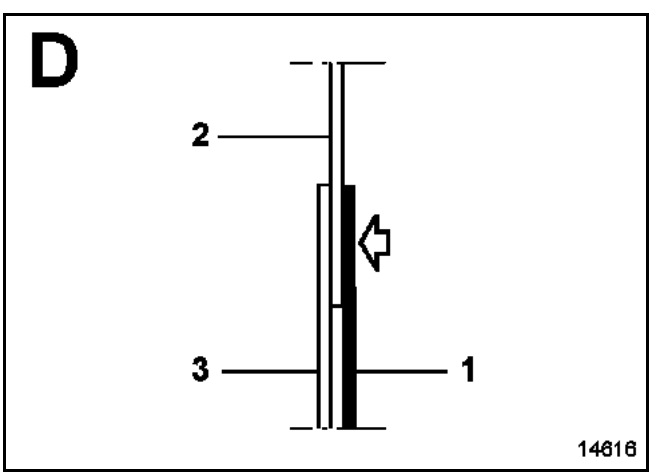

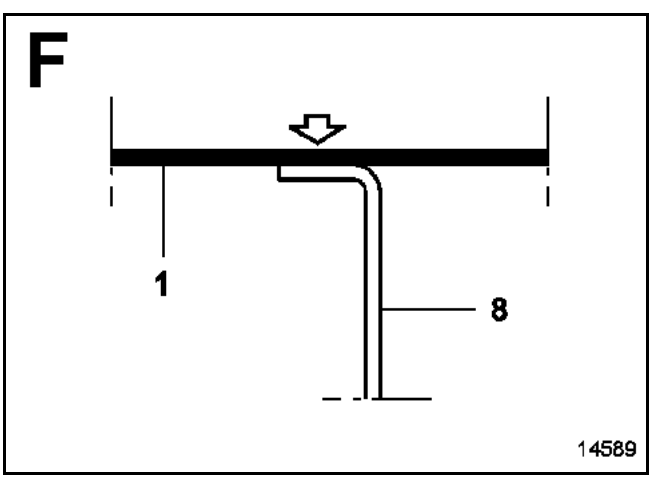

GETtheMANUALS.org

G

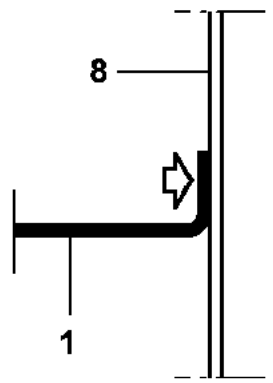

14589-1

I

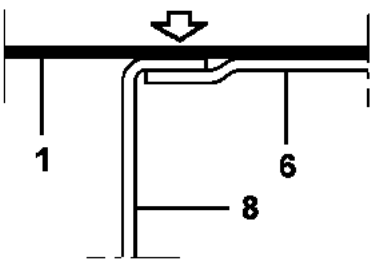

14637

H

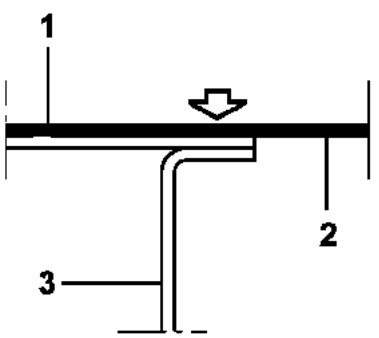

14623

J

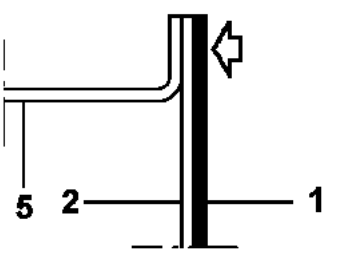

14634

GETtheMANUALS.org

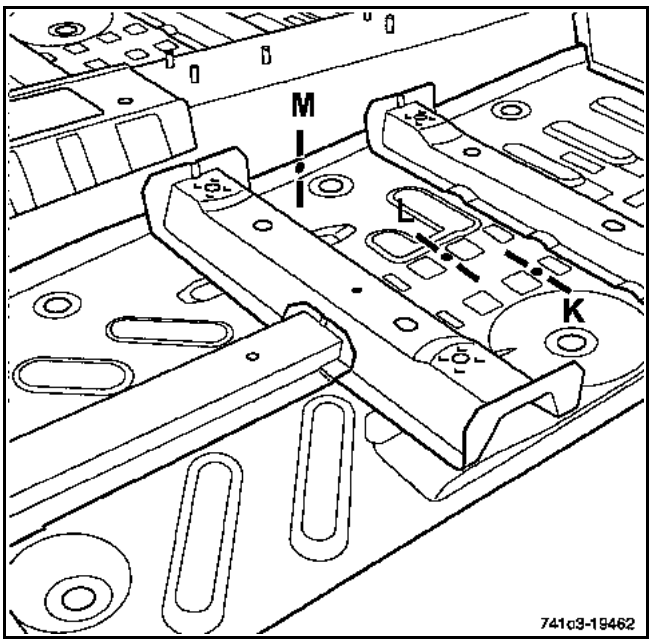

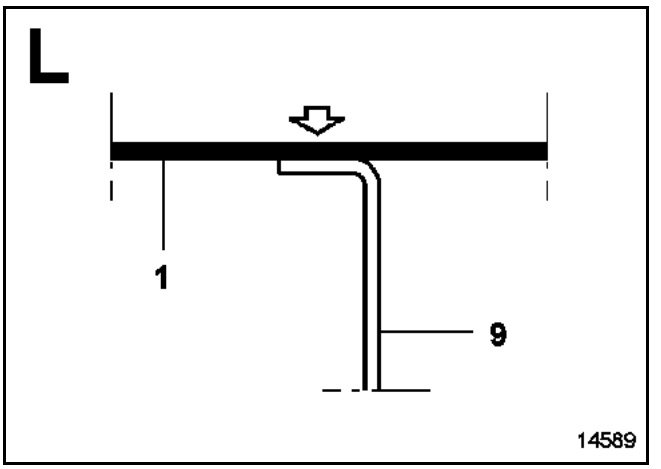

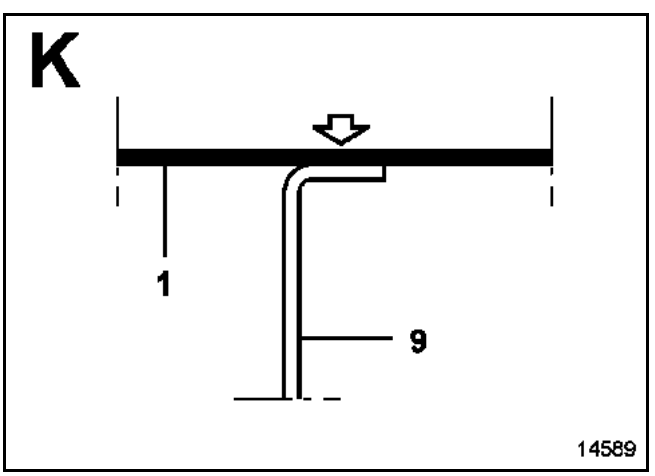

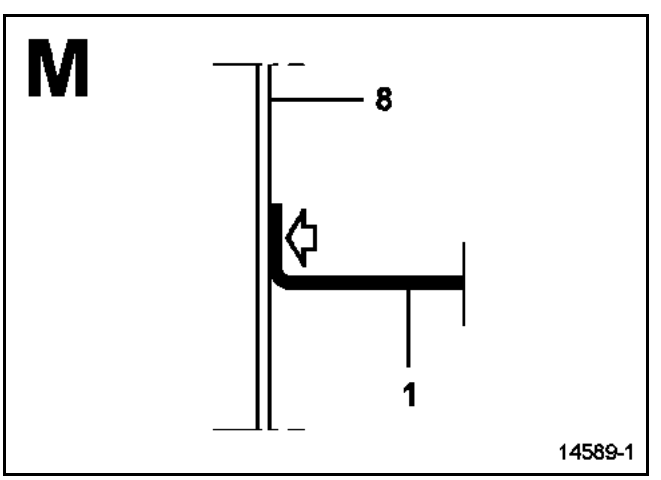

GETtheMANUALS.org

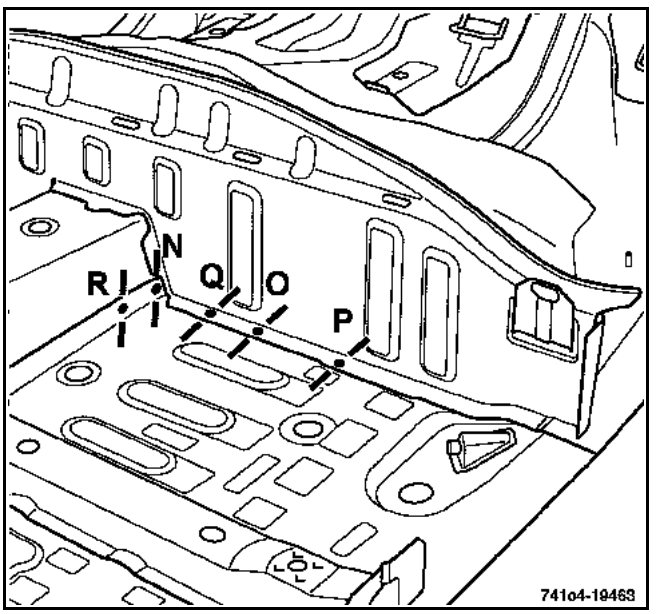

P

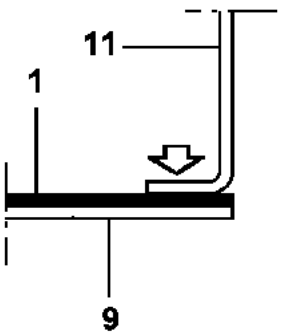

N

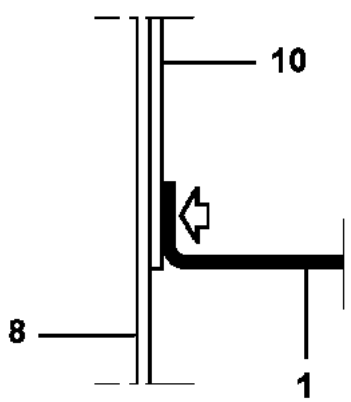

Q

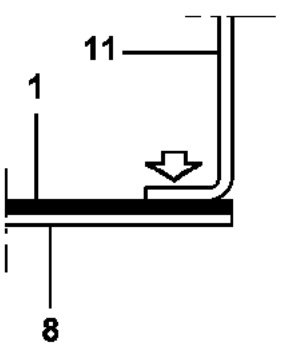

O

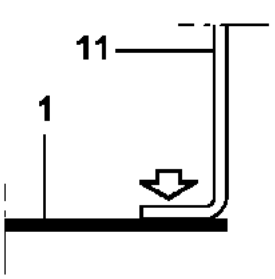

R

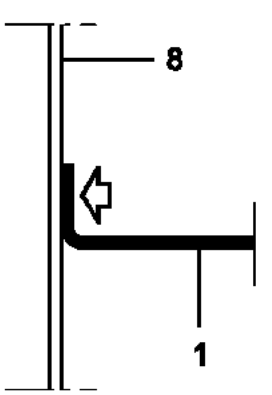

GETtheMANUALS.org

Special note on replacement part

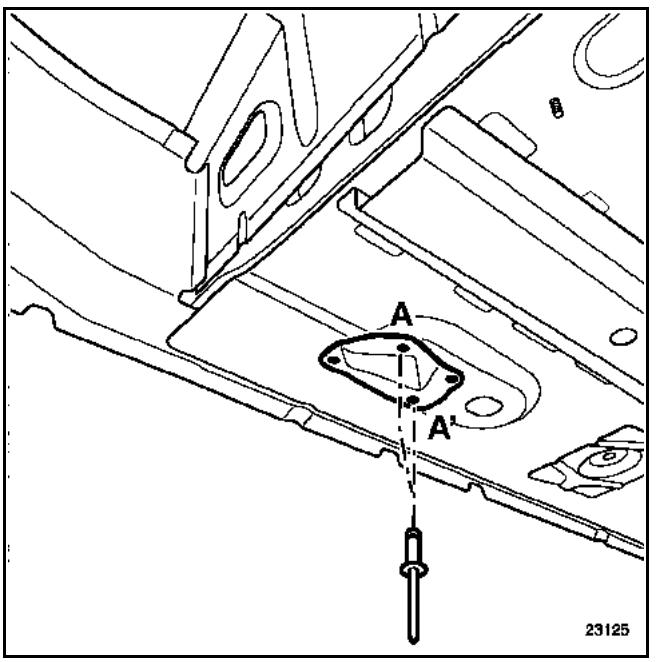

NOTE:
The central floor supplied by the Parts Department does not have the two original spot welds at A, A' on the handbrake pipe mounting.

It is necessary to replace these spot welds with two rivets (part number: **77 03 072 373**).

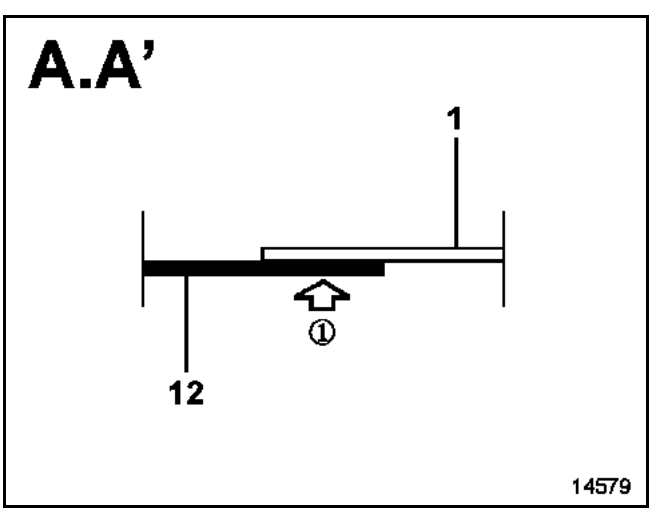

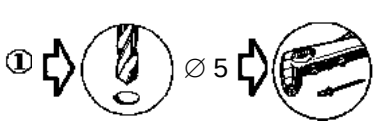

GETtheMANUALS.org

The replacement of this part is a complementary operation to the replacement of the sill panel closure panel or the front wheel arch, rear section following a front side impact.

Cas n° ① (see the introduction to **Section 40A-C: Description of parts**).

The information on the additional parts will be dealt with in their respective sections (refer to contents).

In the procedure described below, you will only find the descriptions and the joints which are specific to the part concerned.

COMPOSITION OF THE REPLACEMENT PART

Part assembled with:
Reinforcement

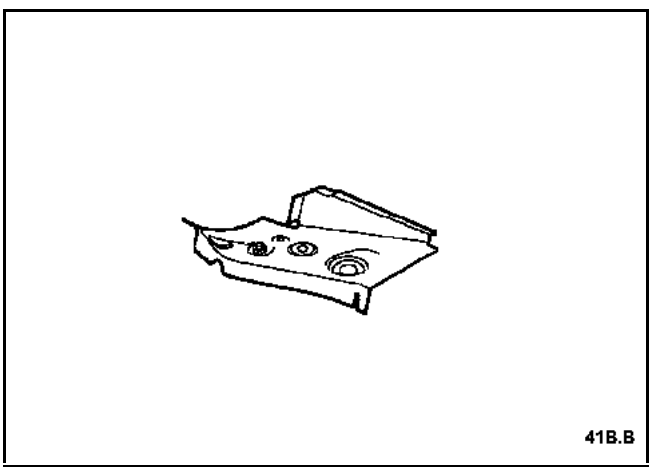

PARTS CONCERNED (thickness in mm):

1	Front side cross member	1.5
2	Central floor, side section	1.2/0.8
3	Front side member, central section	4
4	Sill panel closure panel	1.5

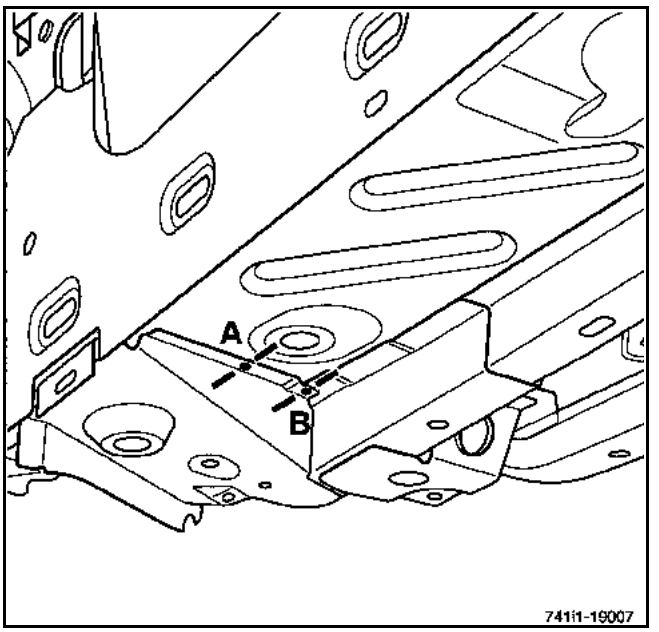

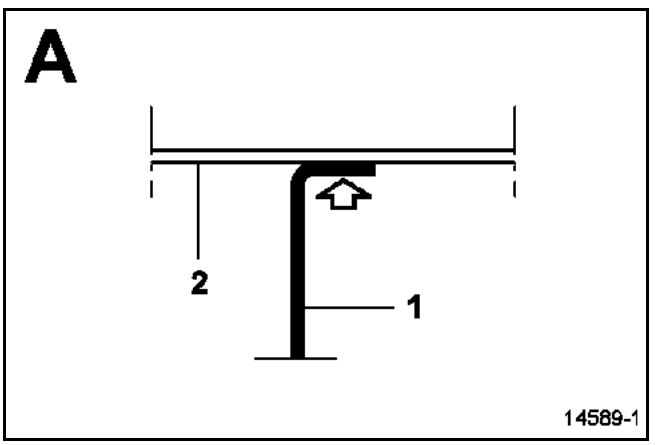

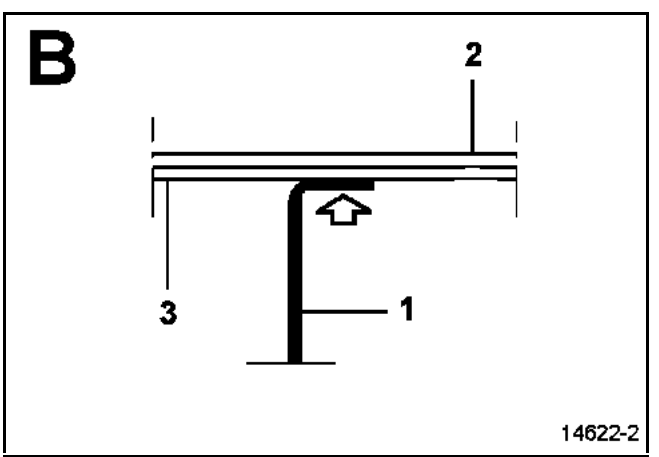

GETtheMANUALS.org

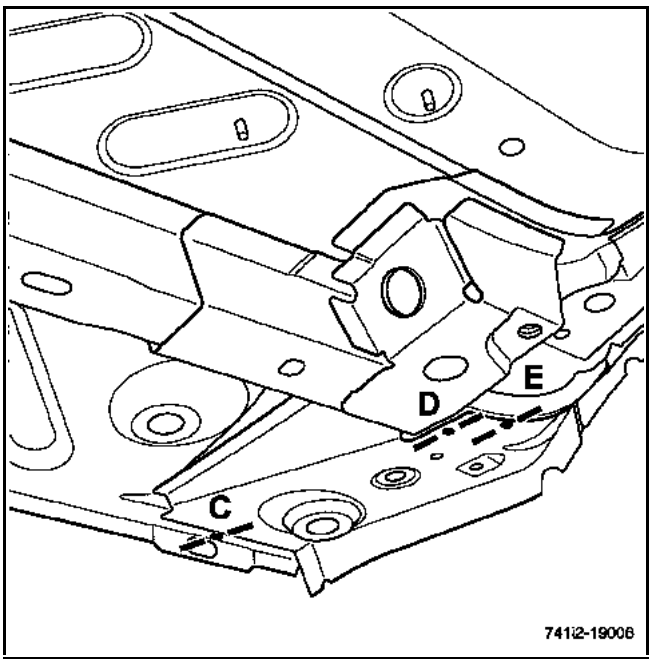

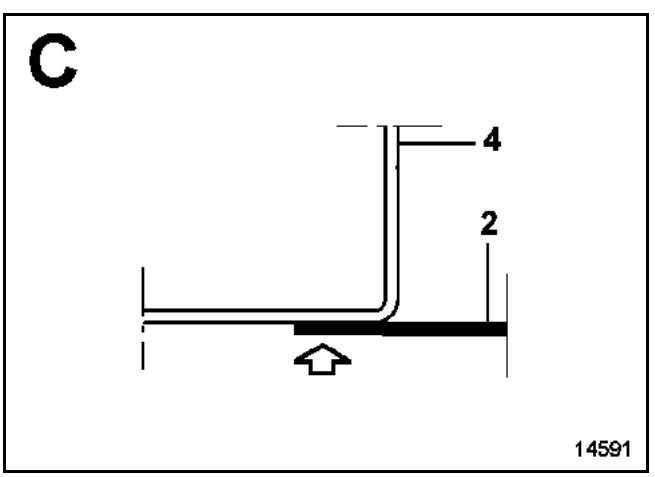

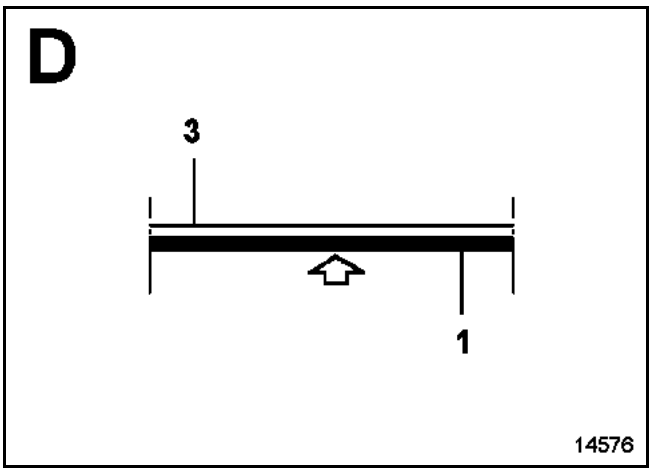

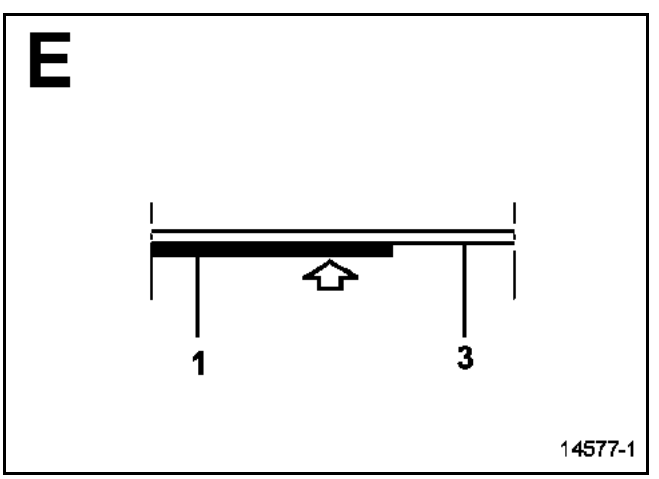

GETtheMANUALS.org

The replacement of this part is an operation linked to the replacement of the side section of the central floor following a side impact.

Cas n° ① (see the introduction to **Section 40A-C: Description of parts**).

The information on the additional parts will be dealt with in their respective sections (refer to contents).

In the procedure described below, you will only find the descriptions and the joints which are specific to the part concerned.

COMPOSITION OF THE REPLACEMENT PART

Part supplied on its own.

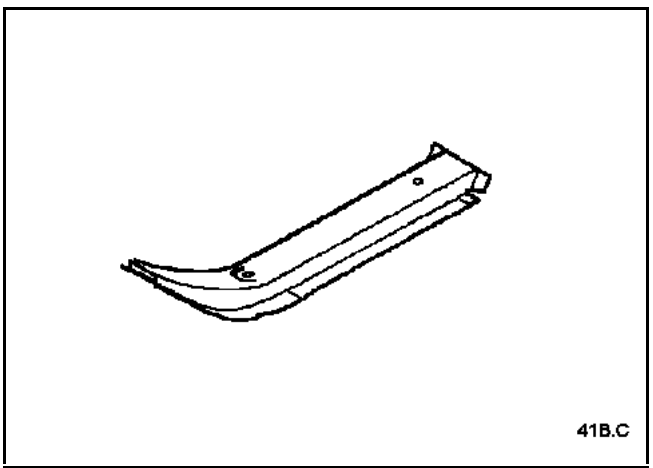

PARTS CONCERNED (thickness in mm):

1	Central floor reinforcement	2.5
2	Central floor, side section	1.2/0.8
3	Front cross member under front seat	2
4	Front side member, rear section	2
5	Front side member, central section	4

GETtheMANUALS.org

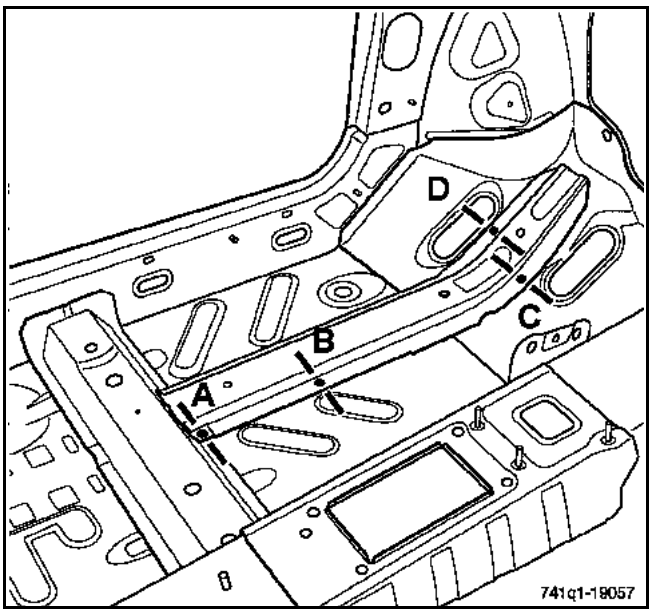

A

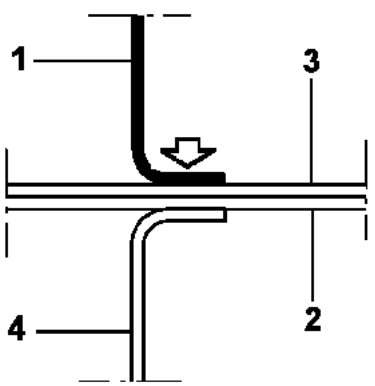

B

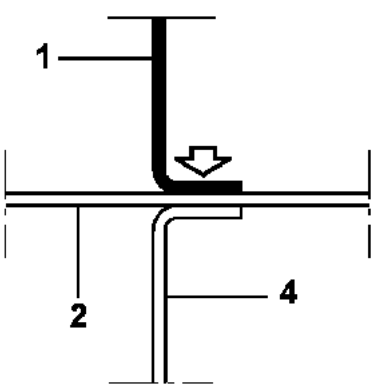

X7

C

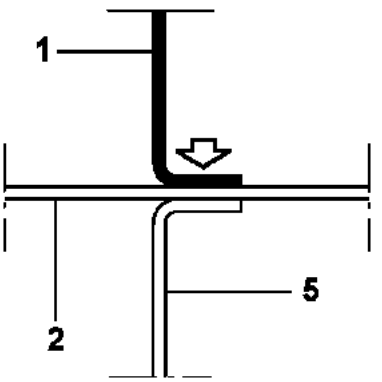

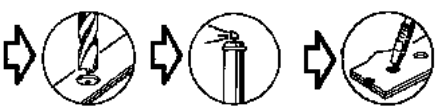
X7

D

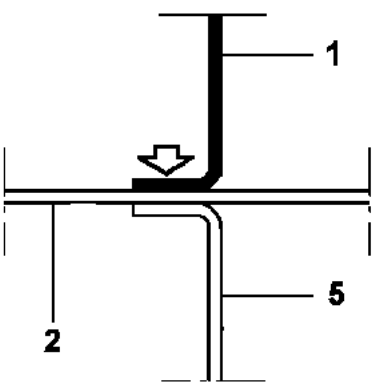

X8

GETtheMANUALS.org

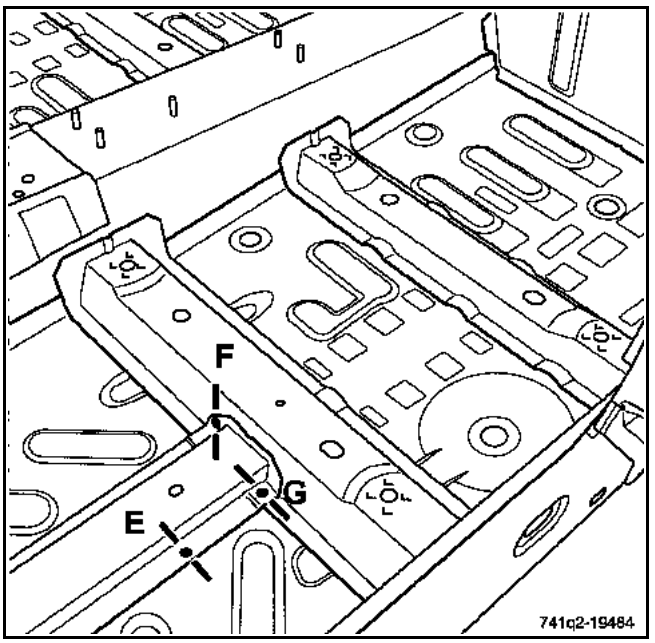

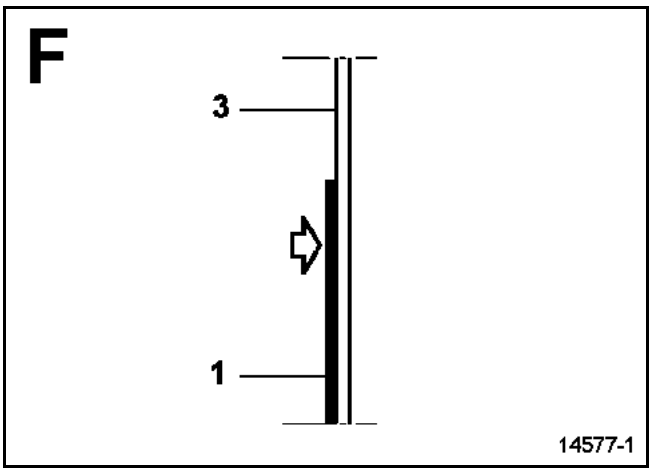

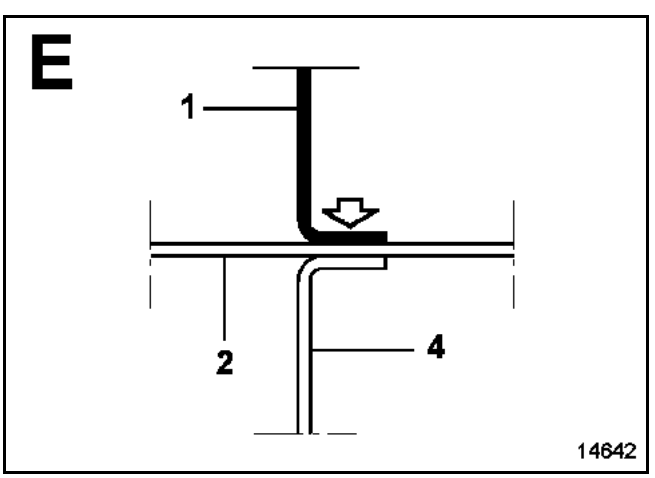

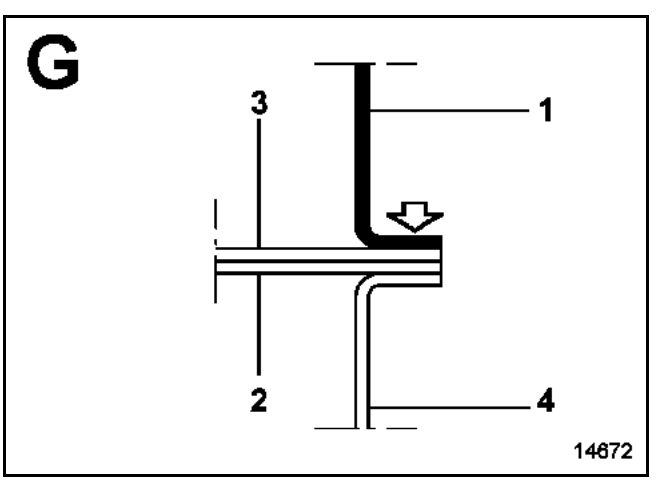

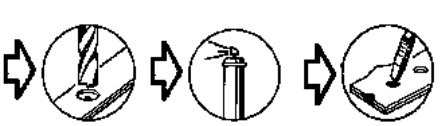

GETtheMANUALS.org

The replacement of this part is a complementary operation to the replacement of a side section of the central floor or a front half unit following a front side impact.

Cas n° ① (see the introduction to **Section 40A-C: Description of parts**).

In the procedure described below, you will only find the descriptions and the joints which are specific to the part concerned.

The information on the additional parts will be dealt with in their respective sections (refer to contents).

COMPOSITION OF THE REPLACEMENT PART

Part assembled with:
Acoustic tie-rod supports
Crimped nuts
Rivets

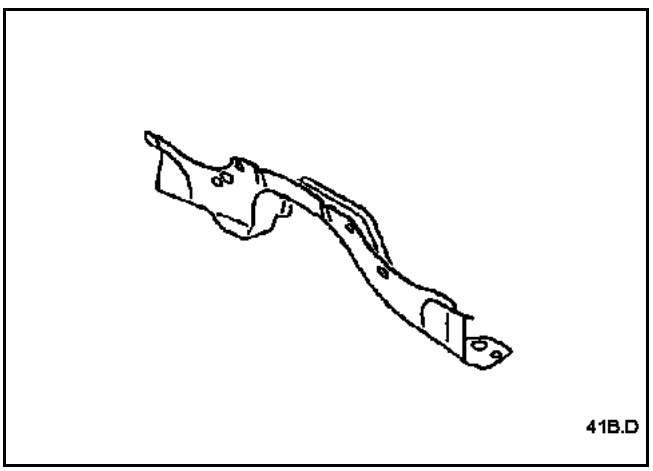

PARTS CONCERNED (thickness in mm):

1	Central floor front cross member	1.2
2	Tunnel	1.2

GETtheMANUALS.org

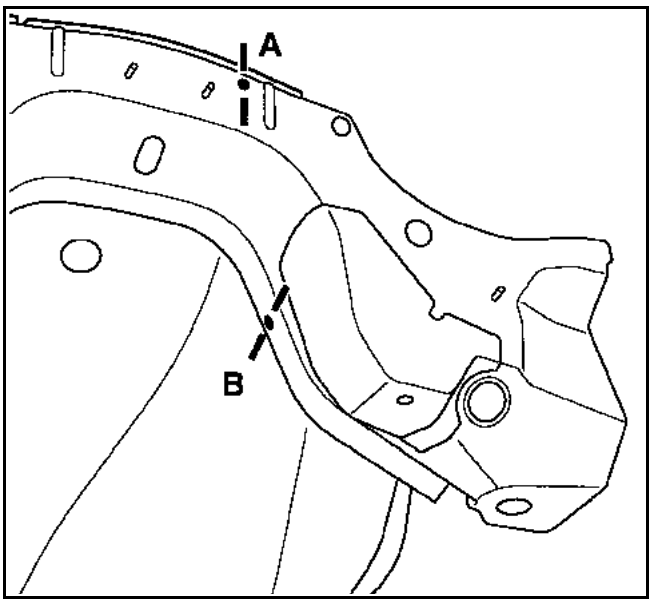

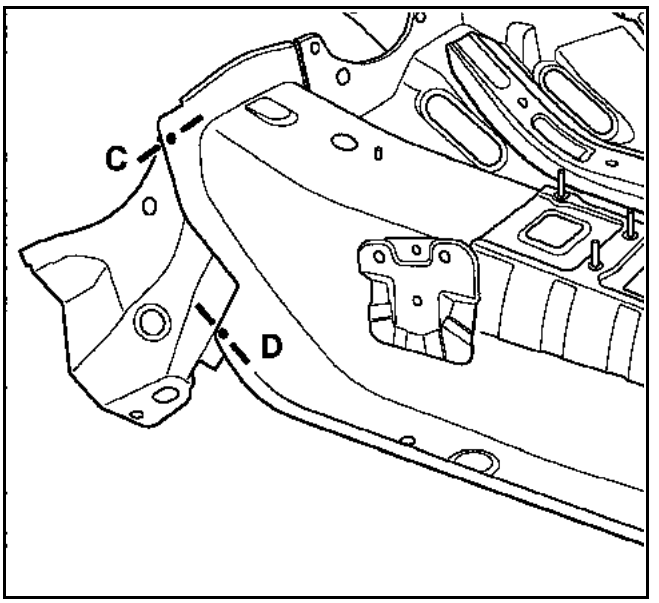

A

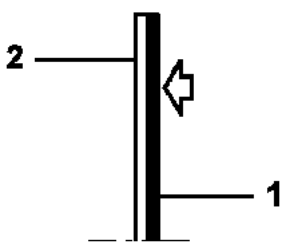

14581

X4

C

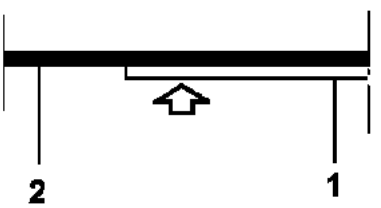

14577

X3

B

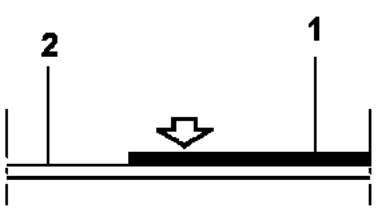

14577-1

X6

D

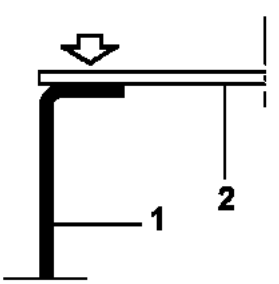

14593-1

X2

GETtheMANUALS.org

The replacement of this part is a complementary operation to the replacement of the side section of the central floor following a side impact.

Case n° ① (see the introduction to **Section 40A-C: Description of parts**).

The information on the additional parts and connections specific to the part have already been dealt with in their appropriate sections (see Contents).

The body jig bench must be used.

COMPOSITION OF THE REPLACEMENT PART

Part assembled with:
Cross member support
Tunnel reinforcements
Centre cross member
Weld bolts
Crimped nuts
Rivet

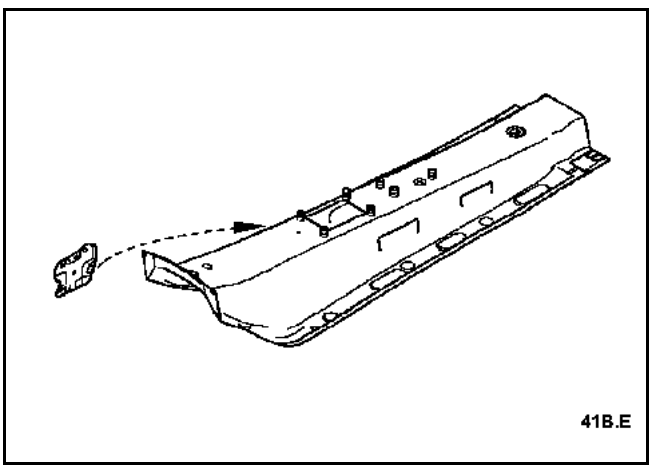

GETtheMANUALS.org

The replacement of this part is an operation linked to the replacement of the side section of the central floor following a side impact.

Cas n° ① (see the introduction to **Section 40A-C: Description of parts**).

In the procedure described below, you will only find the descriptions and the joints which are specific to the part concerned.

The information on the additional parts will be dealt with in their respective sections (refer to contents).

COMPOSITION OF THE REPLACEMENT PART

Part assembled with:
Seat mounting spacers

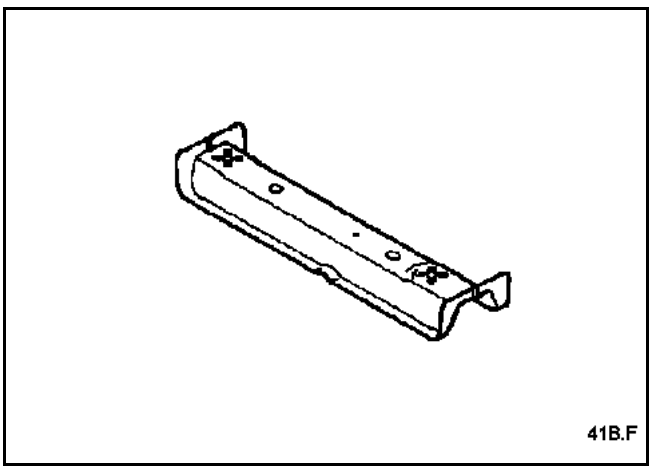

PARTS CONCERNED (thickness in mm):

1	Front cross member under front seat	2
2	Central floor reinforcement	2.5
3	Central floor, side section	1.2/0.8
4	Front side member, rear section	2
5	Sill panel closure panel	1.5

GETtheMANUALS.org

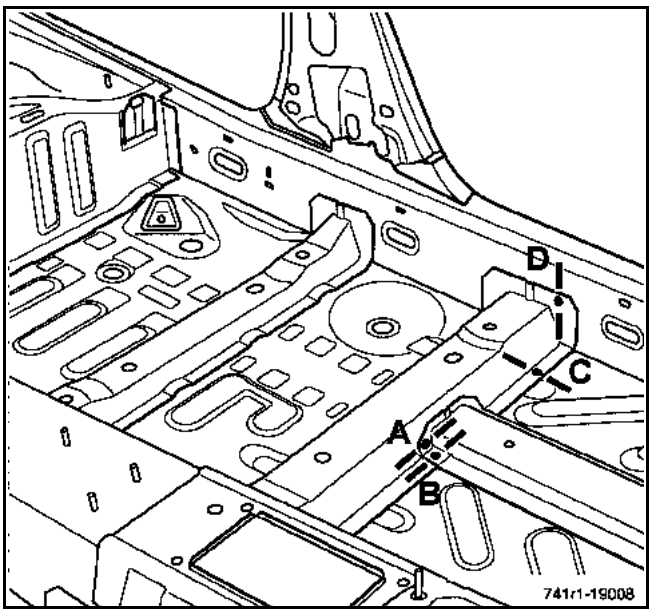

A

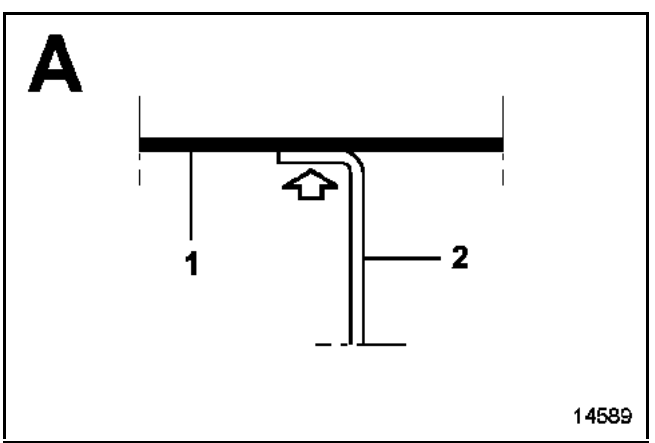

X2

B

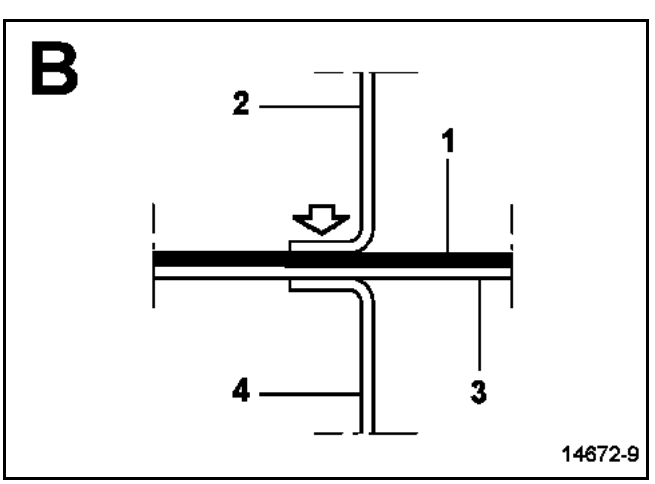

X2

C

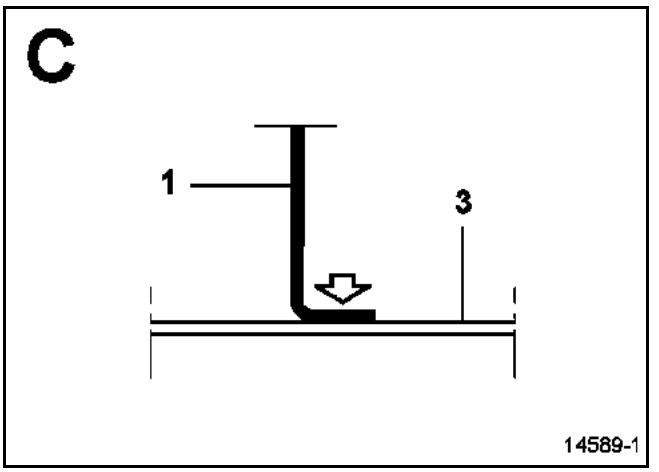

X6

D

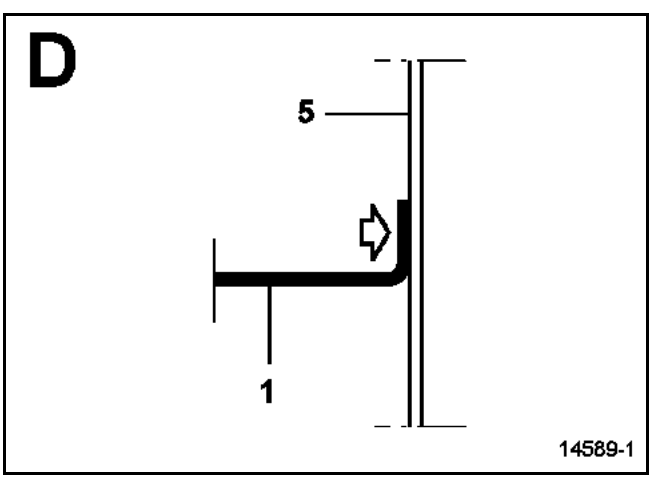

X4

GETtheMANUALS.org

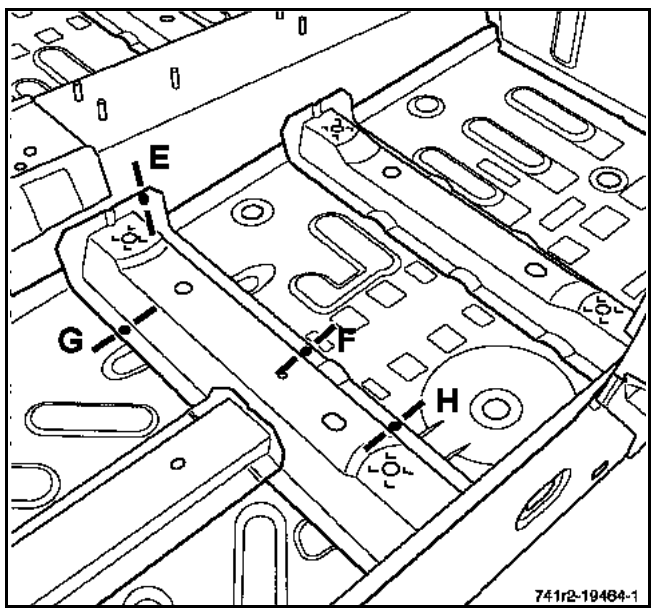

E

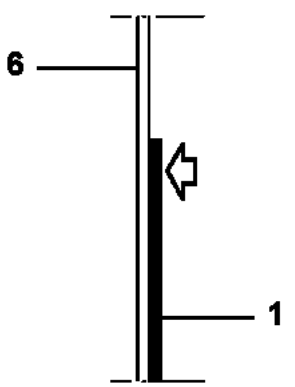

F

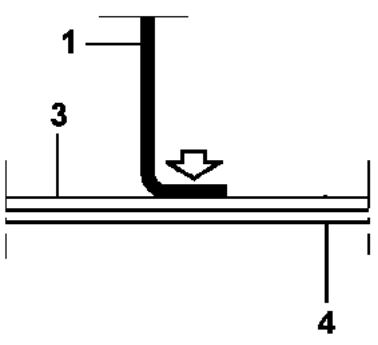

G

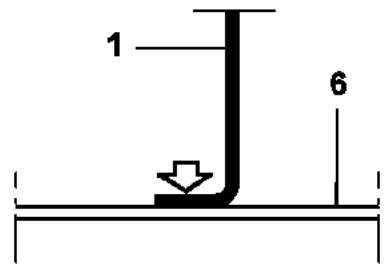

H

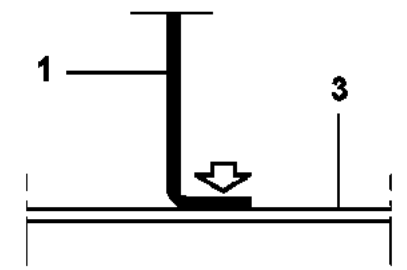

GETtheMANUALS.org

The replacement of this part is an operation linked to the replacement of the side section of the central floor following a side impact.

Cas n° ① (see the introduction to **Section 40A-C: Description of parts**).

In the procedure described below, you will only find the descriptions and the joints which are specific to the part concerned.

The information on the additional parts will be dealt with in their respective sections (refer to contents).

COMPOSITION OF THE REPLACEMENT PART

Part assembled with:
Seat mounting spacers

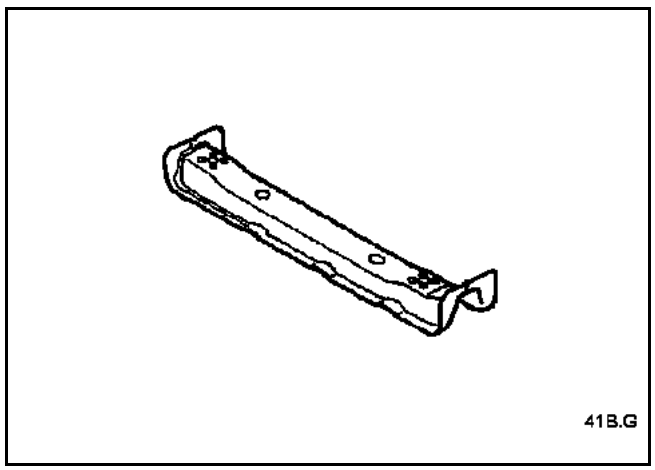

PARTS CONCERNED (thickness in mm):

1	Front seat rear cross member	2
2	Central floor, side section	1.2/0.8
3	Tunnel	1.2
4	Front side member, rear section	2
5	Sill panel closure panel	1.5

GETtheMANUALS.org

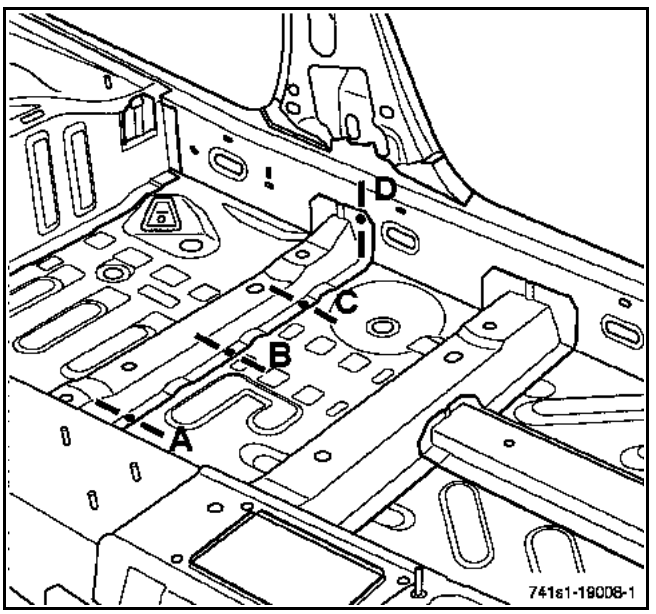

A

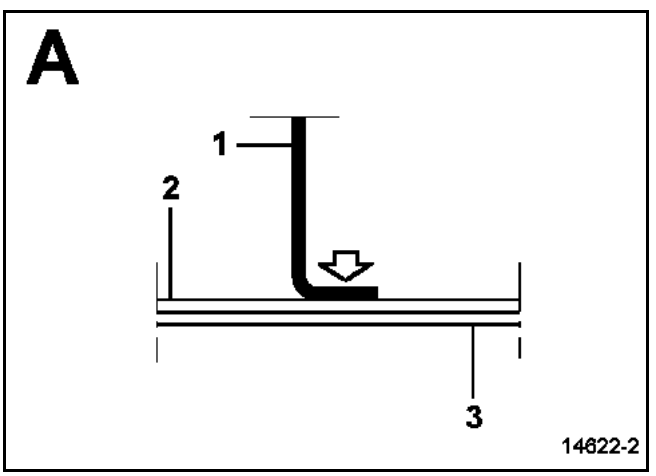

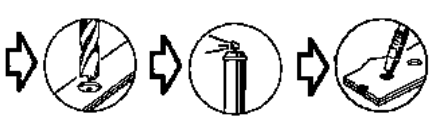

B

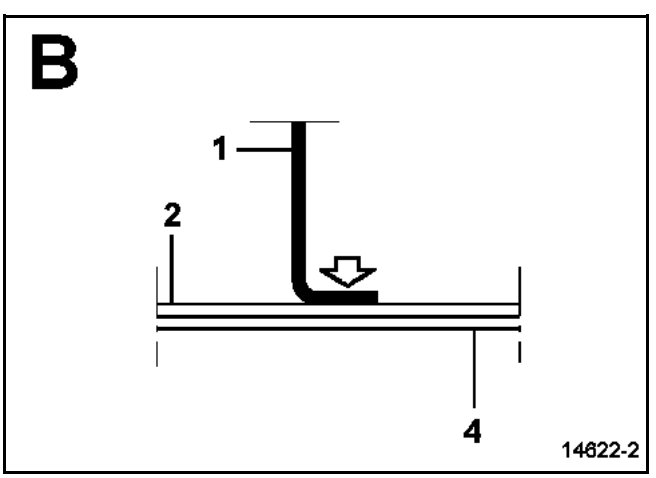

C

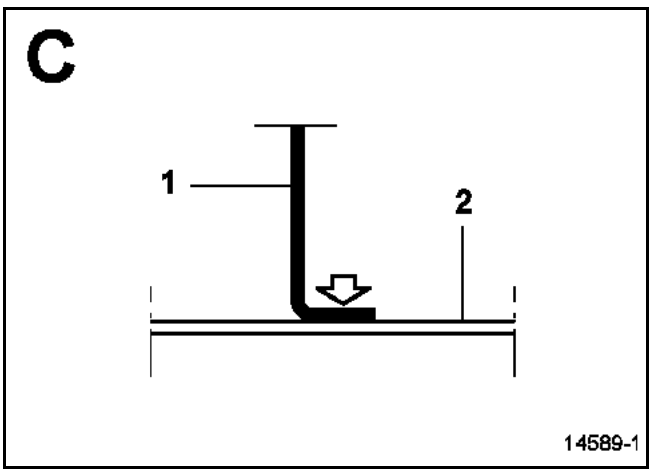

D

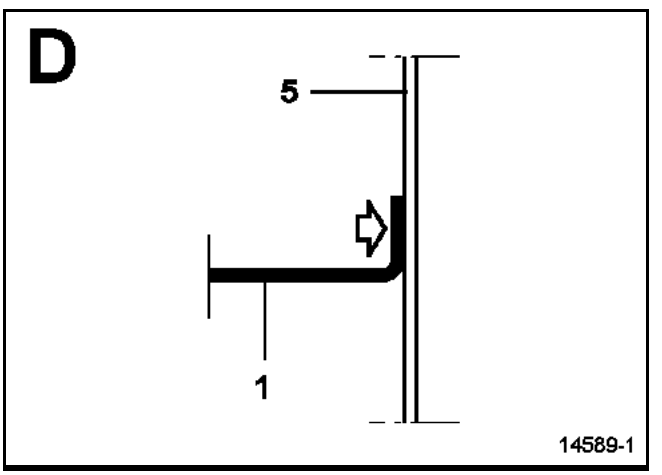

GETtheMANUALS.org

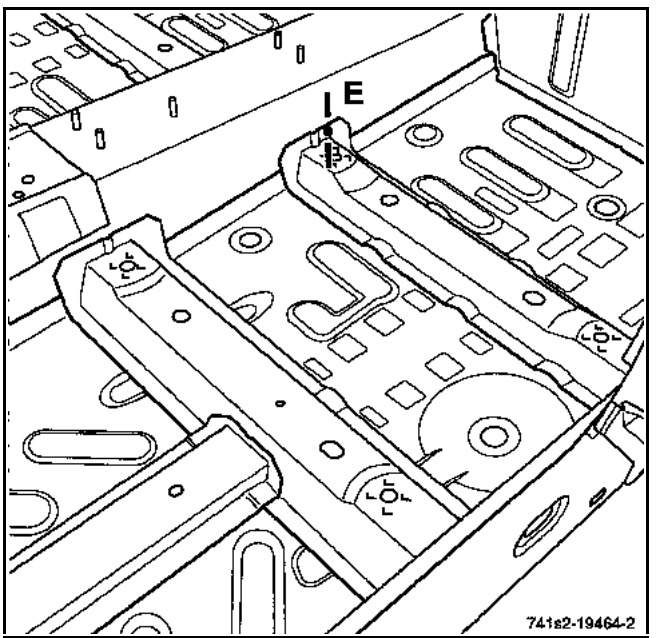

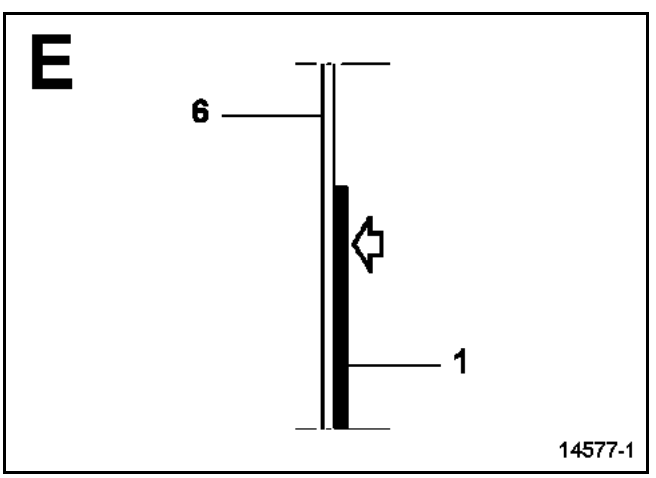

GETtheMANUALS.org

The replacement of this part is a basic operation for a side impact.

It is part of case no. ② (see the introduction to **Section 40A-C: Description of parts**).

In the procedure described below, you will find only the descriptions and the connections which are specific to the part concerned.

The information on the additional parts will be dealt with in their respective sections (refer to contents).

To perform this operation, the lower expanding insert must also be ordered.

Replacement is made using cuts (a, b, and c).

The positions of the cuts given in the procedure can be modified according to the severity of impact.

In the Method of a replacement under the front door, it is possible to make cut (a) twice in zone **X1** (see example at the end).

NOTE:
Where spot welds cannot be made with the spot welder, they can be replaced by plug welds.

COMPOSITION OF THE REPLACEMENT PART

Part assembled with weld stud.

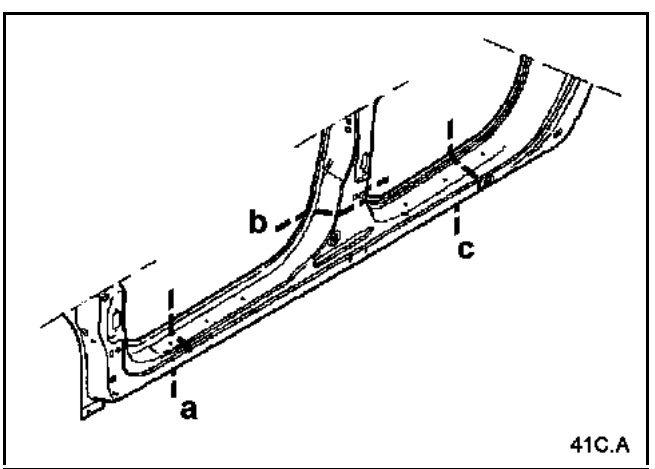

PARTS CONCERNED (thickness in mm):

1 Sill panel 0.9

Replacement using cuts (a, b and c)

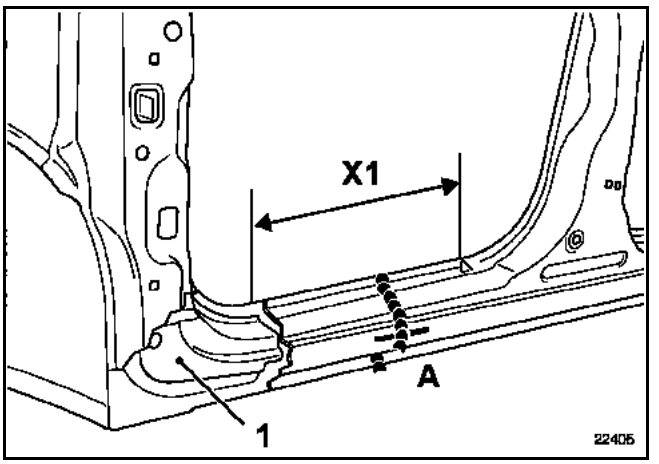

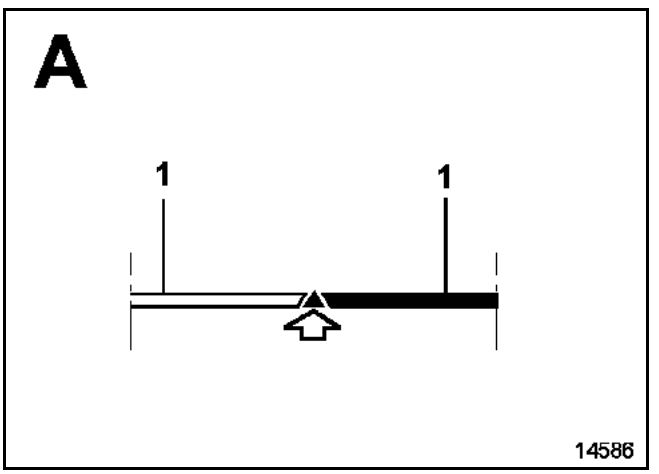

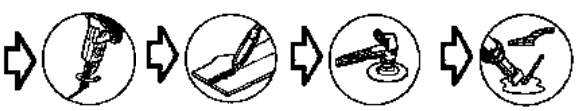

NOTE:
It is advisable to make the cut in zone **X1** if possible (zone not visible).

IMPORTANT:
It is possible to make the cut level with the A-pillar or underneath the hinge; in this case, be careful to **protect the pillar stiffener (1)**.

GETtheMANUALS.org

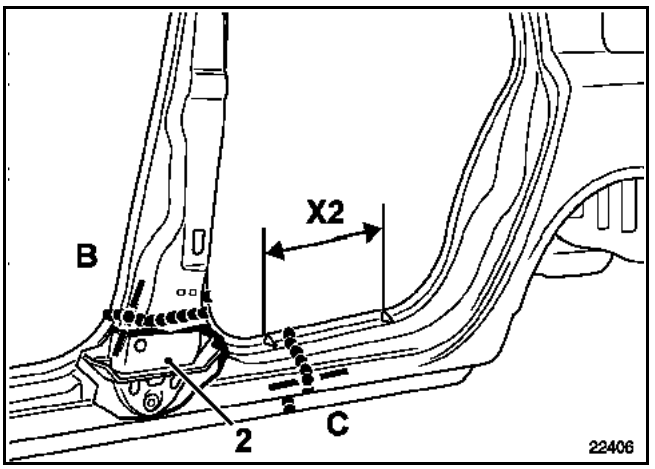

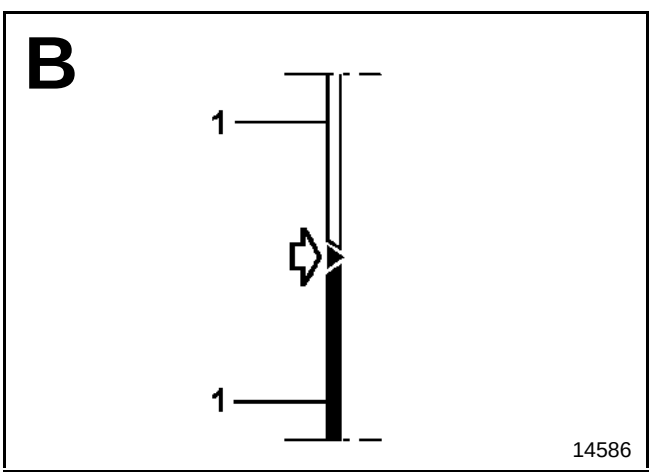

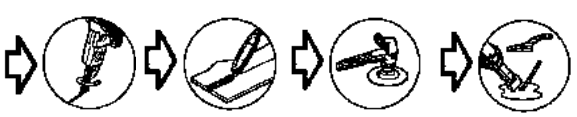

NOTE:
When performing the cutting operation, protect the B-pillar stiffener (2).

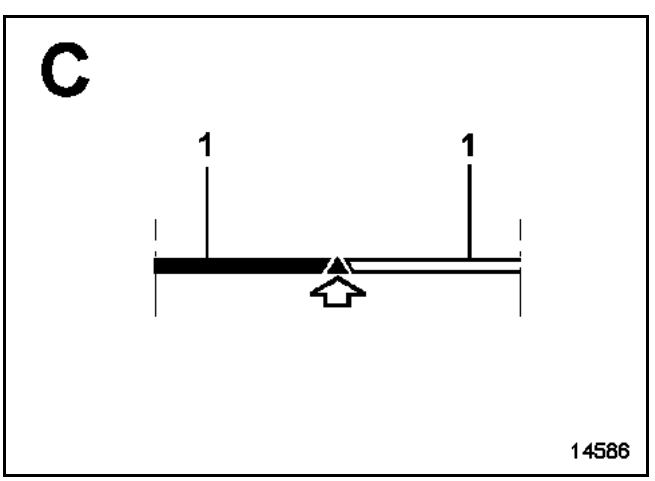

NOTE:
it is advisable to make cut C in zone **X2** if possible (zone not visible).

Depending on the severity of the impact, it is possible to make a cut at the bottom of the rear wing panel.

GETtheMANUALS.org

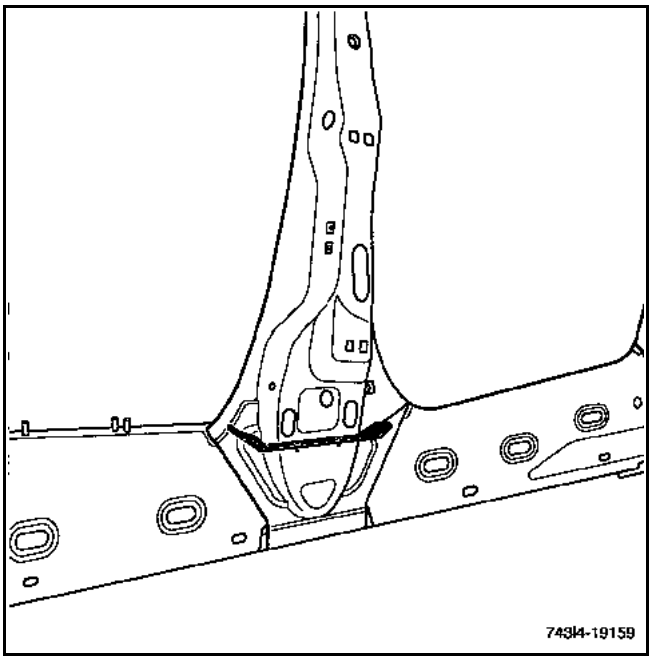

REMINDER:
It is essential to replace the expanding insert (see procedure described in **Section 43A-A A-pillar**).

GETtheMANUALS.org

Partial replacement under front door

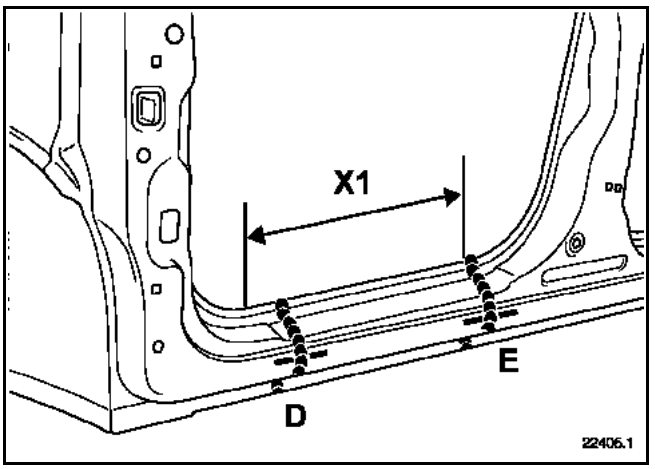

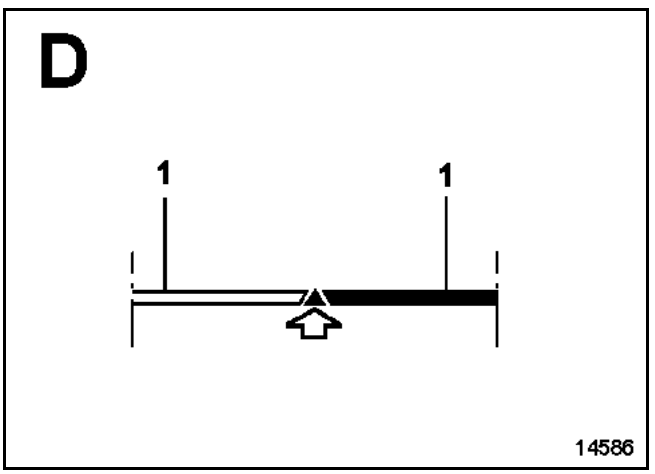

NOTE:
If the impact is very localised, it is possible to carry out a partial replacement in zone **X1**.

This procedure can also be applied underneath the rear side door.

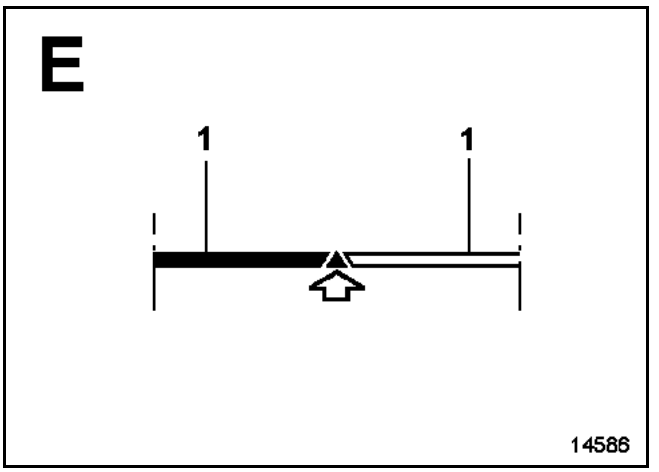

GETtheMANUALS.org

The replacement of this part is an additional operation to the replacement of the sill panel following a side impact.

Cas n° ① (see the introduction to **section 40A-C: Description of parts**).

In the procedure described below, you will only find the descriptions and the joints which are specific to the part concerned.

The information on the additional parts will be dealt with in their respective sections (refer to contents).

This operation can be carried out in three possible ways:
– using cut (a).
– using cut (b),
– or complete.

NOTE:
– For the partial front operation, the lower expanding insert must also be ordered.
– For the partial rear operation, the wheel arch lower extension must be removed.
– There is no specific procedure for complete replacement, the connections are all made in the same way as originally.

COMPOSITION OF THE REPLACEMENT PART

Part supplied on its own.

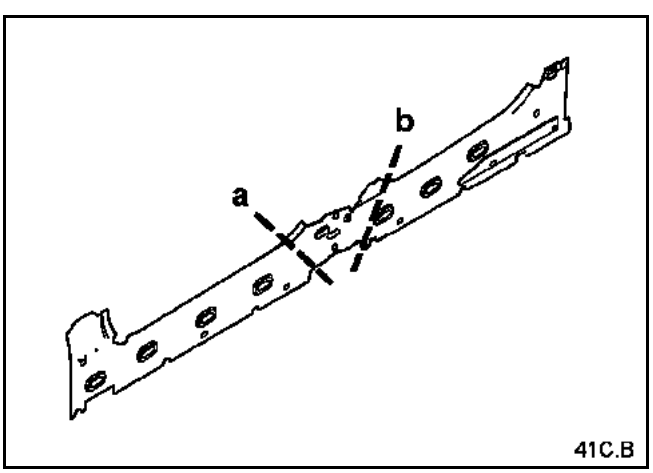

PARTS CONCERNED (thickness in mm):

1 Sill panel reinforcement 1.5

GETtheMANUALS.org

Replacement using cut a

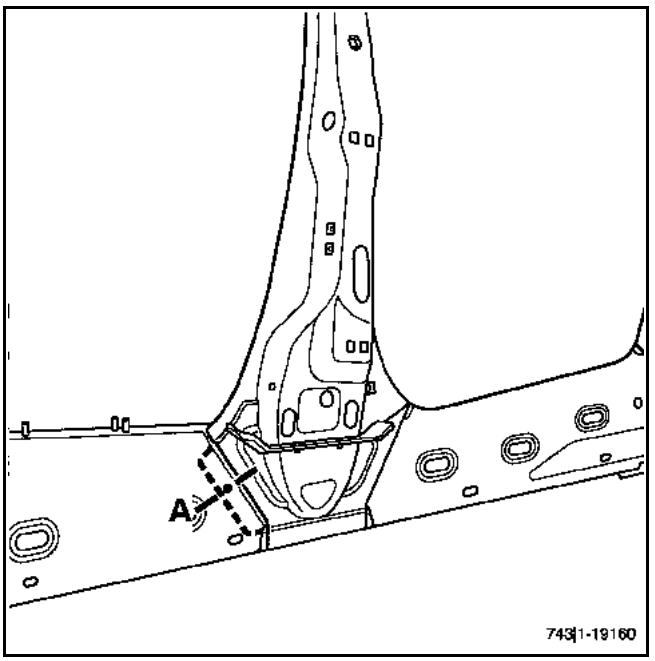

part on vehicle

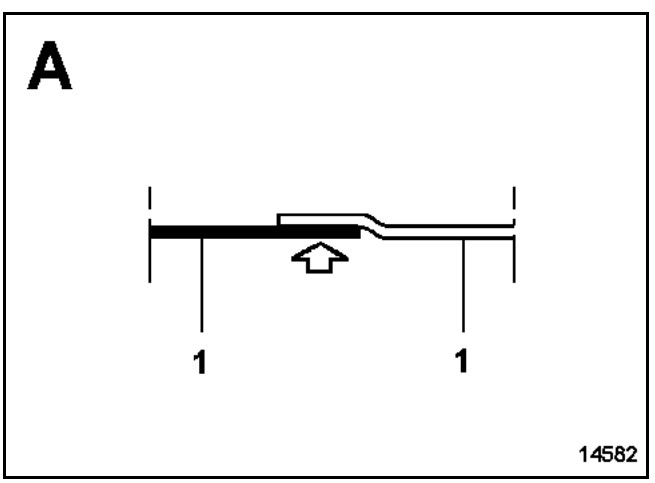

X3

Replacement using cut b

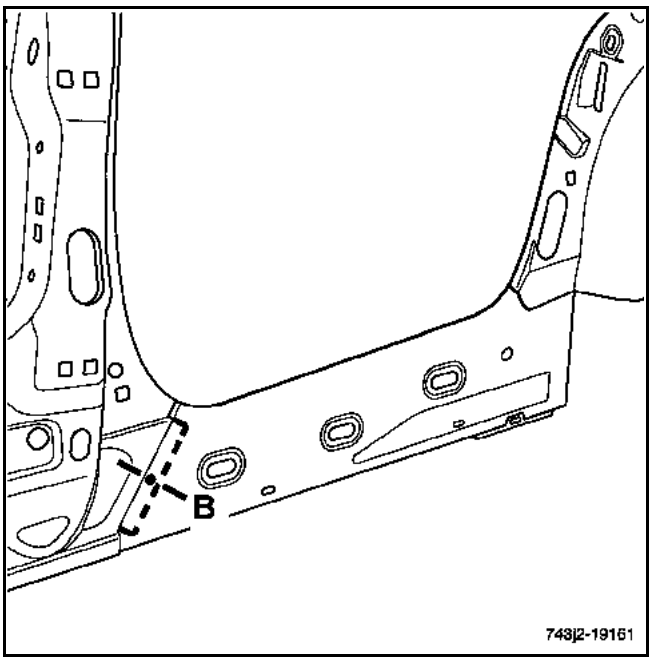

part on vehicle

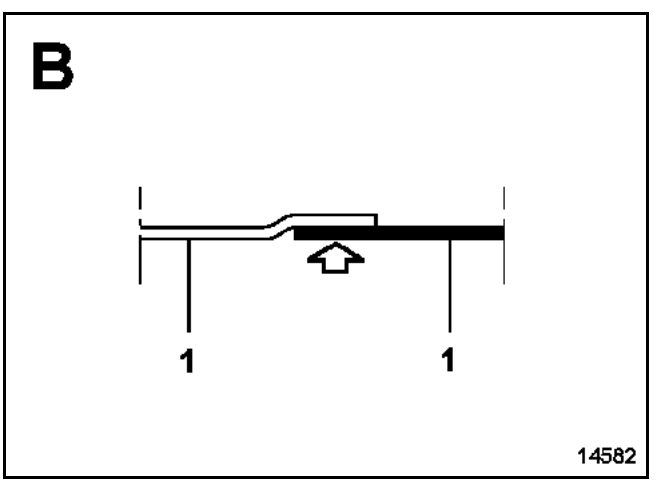

X3

GETtheMANUALS.org

The replacement of this part is a complementary operation to the replacement of the sill panel with reinforcement following a side impact.

Cas n° ① (see the introduction to **section 40A-C: Description of parts**).

In the procedure described below, you will only find the descriptions and the joints which are specific to the part concerned.

The information on the additional parts will be dealt with in their respective sections (refer to contents).

To perform this operation, the two front and rear expanding inserts must also be ordered.

This operation can be carried out in two possible ways:
– using cut (a).
– or complete.

NOTE:
There is no specific procedure for complete replacement, the connections are all made in the same way as originally.

COMPOSITION OF THE REPLACEMENT PART

Part assembled with:
Jacking point
Central reinforcement
Welded earth stud
Welded stud

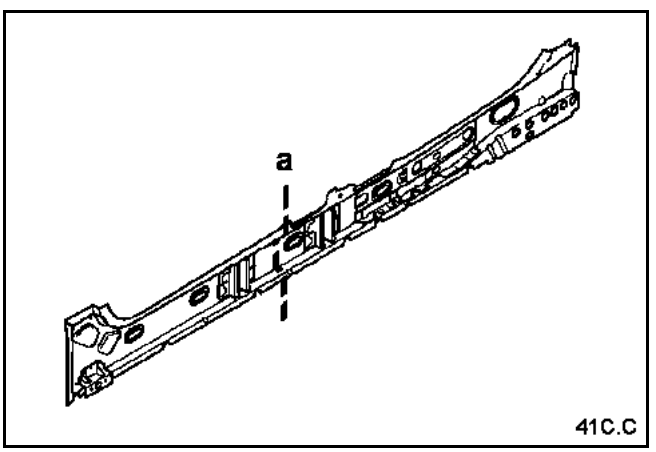

PARTS CONCERNED (thickness in mm):

1	Sill panel closure panel	1.5
2	Rear side member rear reinforcement	1.5

GETtheMANUALS.org

Replacement of the front section using cut a

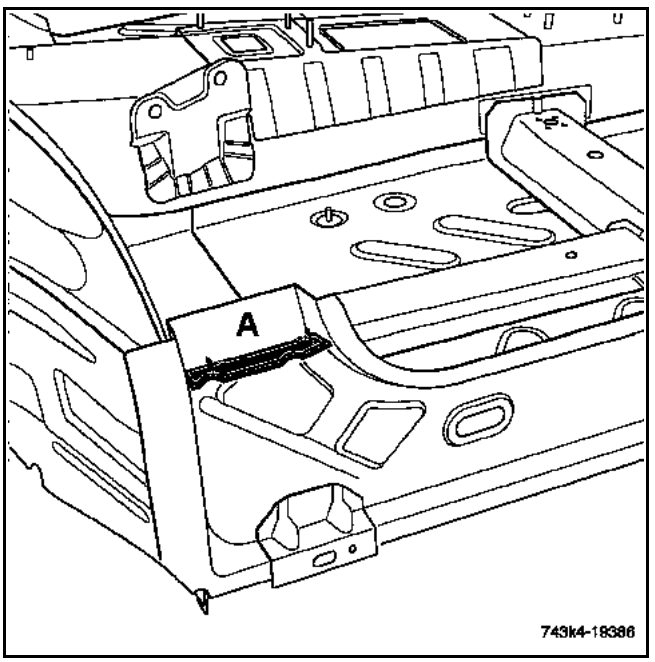

REMINDER:
it is essential to replace the expanding insert (A) according to the procedure described in section 43A-A A-pillar.

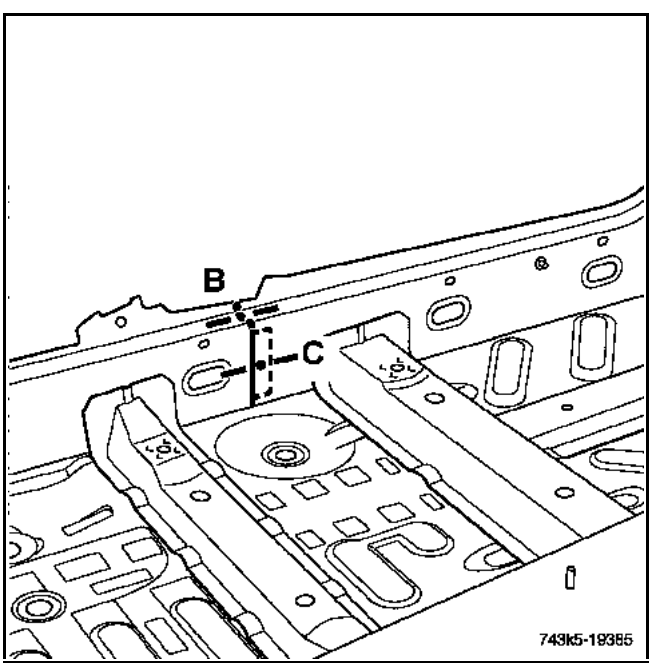

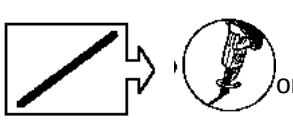
on the replacement part

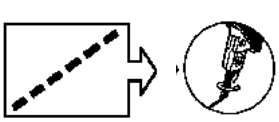
on the vehicle

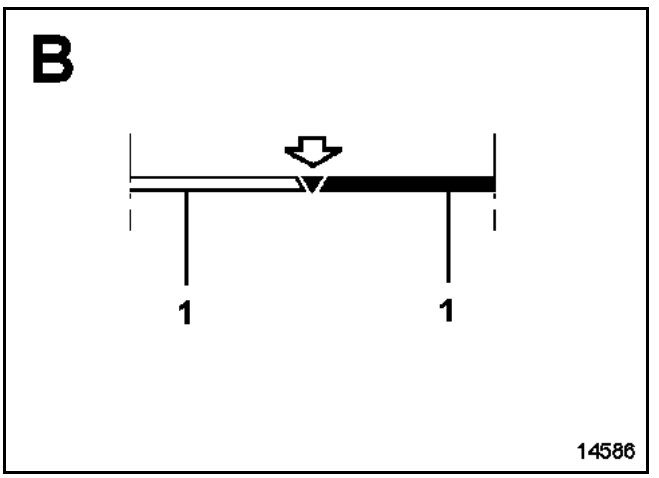

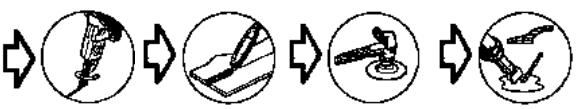

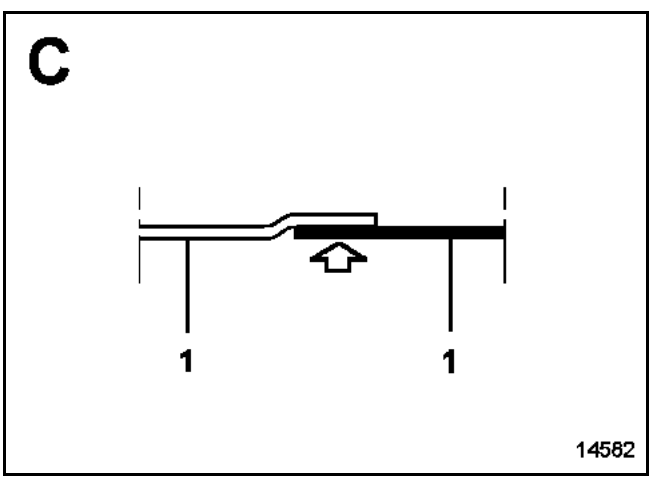

X 3

GETtheMANUALS.org

Replacement of the rear section using cut a

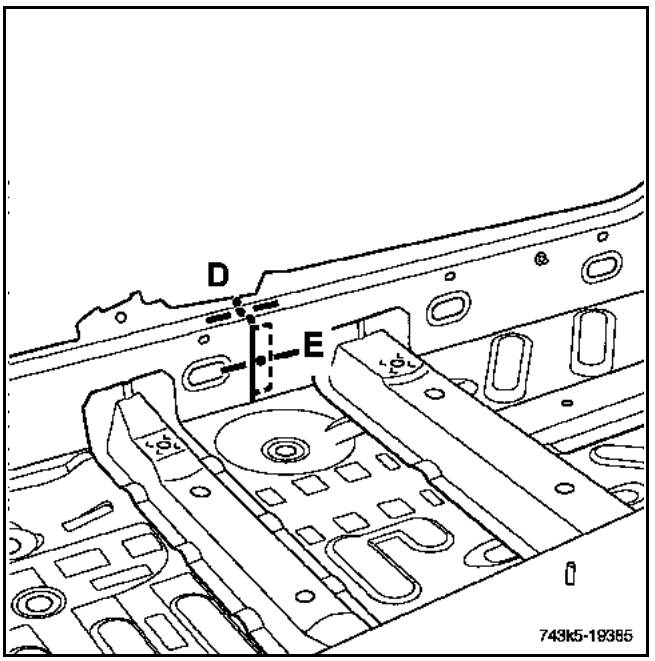

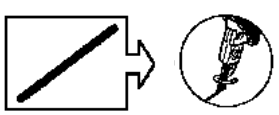
on the vehicle

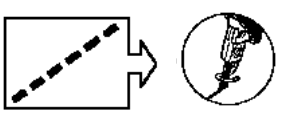
on the replacement part

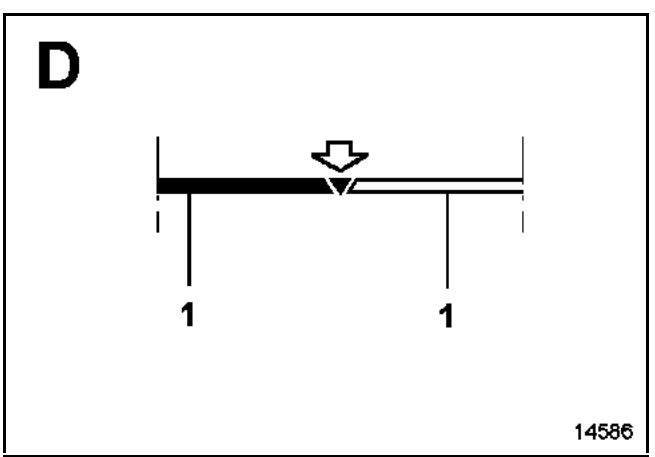

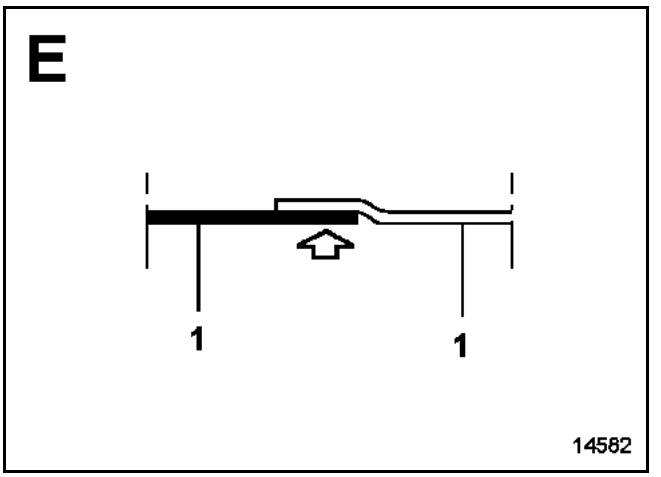

X 3

GETtheMANUALS.org

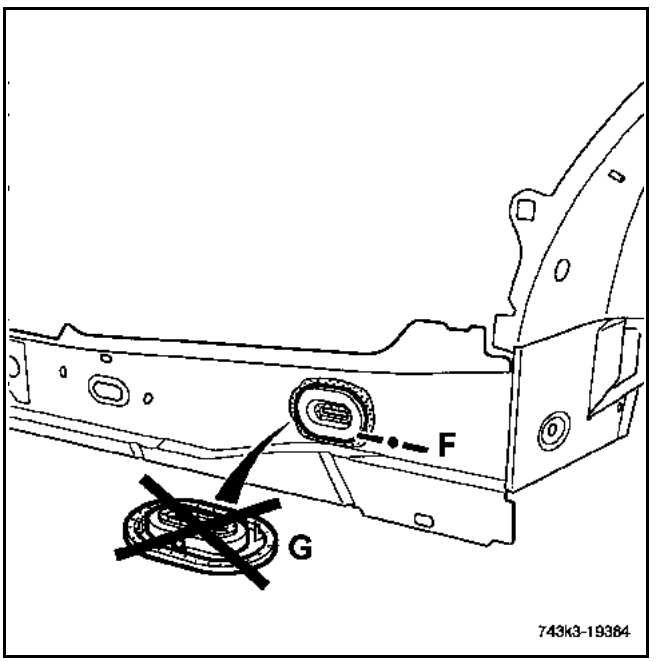

IMPORTANT:
Insert G has been withdrawn from production. It is no longer fitted on current vehicles.

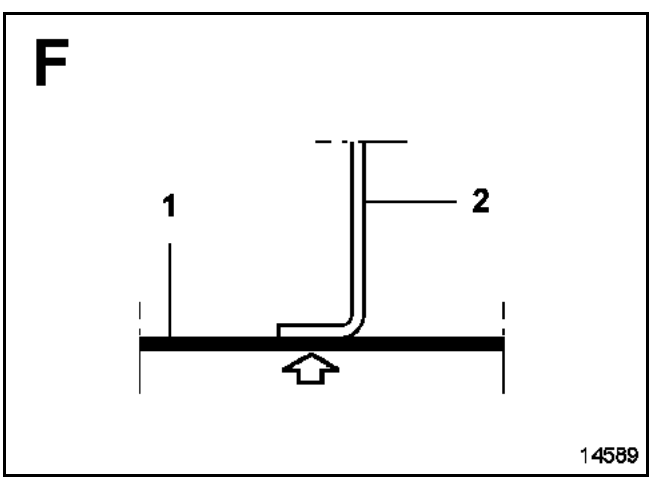

GETtheMANUALS.org

The replacement of this part is a complementary operation to the replacement of the rear end panel for a rear impact.

It is part of case n° ② (see the introduction to **Section 40A-C: Description of parts**).

In the procedure described below, you will only find the descriptions and the joints which are specific to the part concerned.

The information on the additional parts will be dealt with in their appropriate sections (see Contents).

There are two ways of carrying out this operation:
– complete,
– using cut (a) (RH or LH side).

NOTE:
where welds cannot be made by the spot welder, they can be replaced by plug welds.

COMPOSITION OF THE REPLACEMENT PART

Part assembled with:
Mounting pad
Upper cross member (1)
Spare wheel mounting brace
Welded bolt
Captive nut
Steel rivets
Welded stud

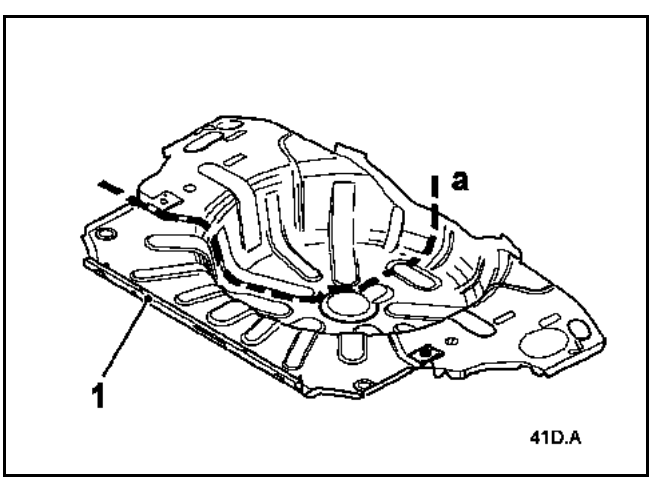

PARTS CONCERNED (thickness in mm):

1	Rear floor	0.8
2	Rear floor, front section	0.7
3	Cross member under rear floor	1.2
4	Rear side member	1.8
5	Side member reinforcement	1.8
6	Inner wheel arch	0.8

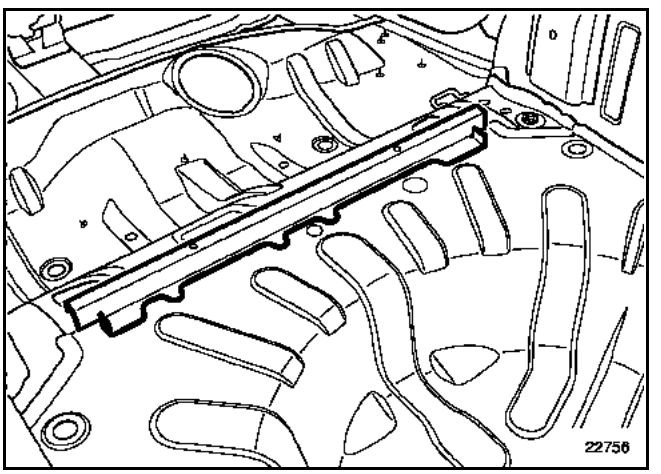

REMINDER:
The replacement floor is supplied with the cross member assembled.

GETtheMANUALS.org

Complete replacement

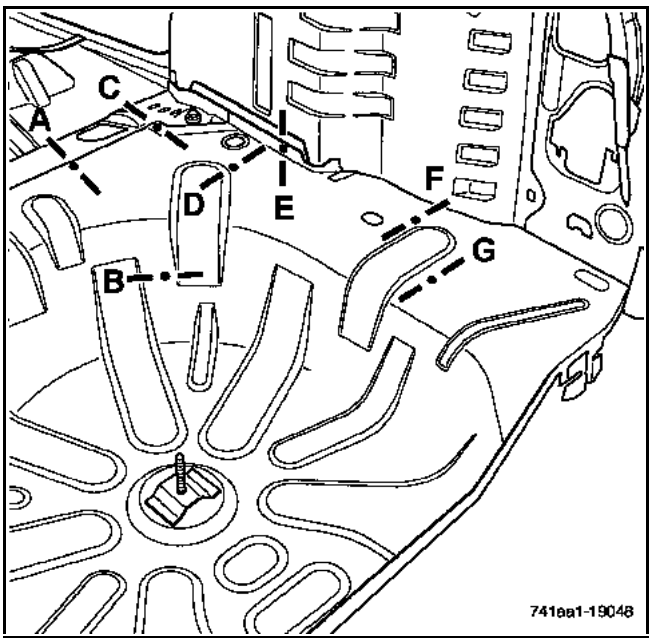

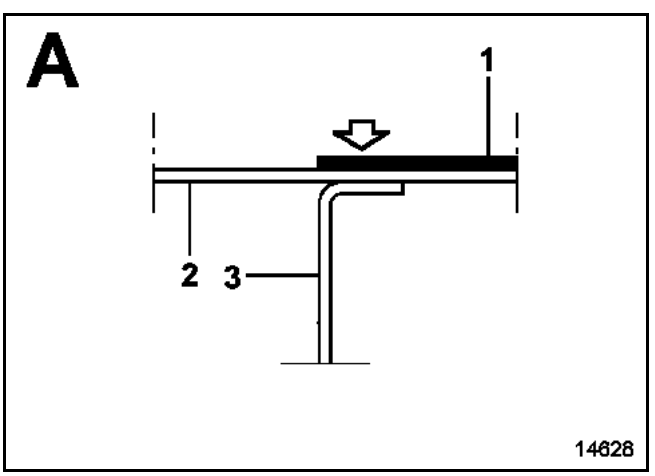

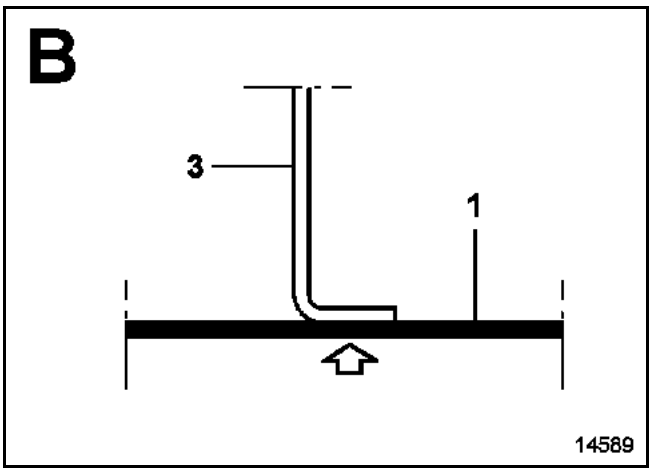

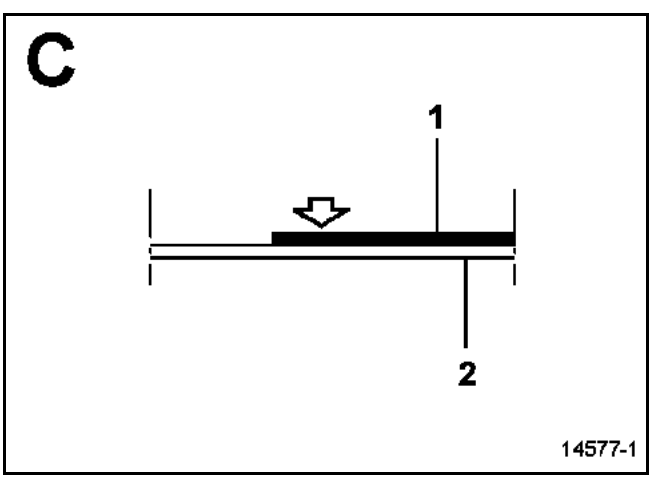

GETtheMANUALS.org

D

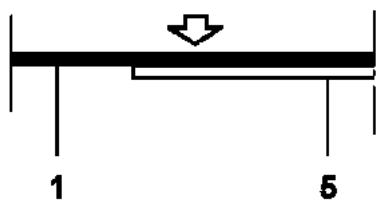

14577

F

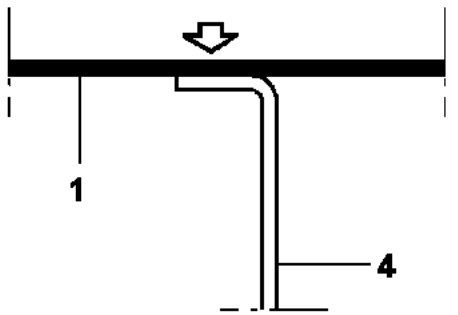

14589

E

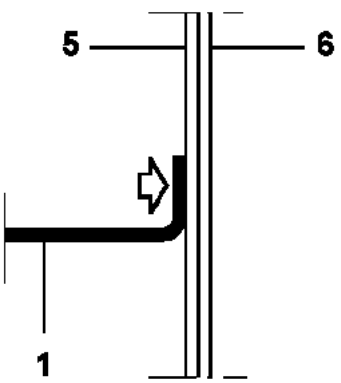

14622-2

G

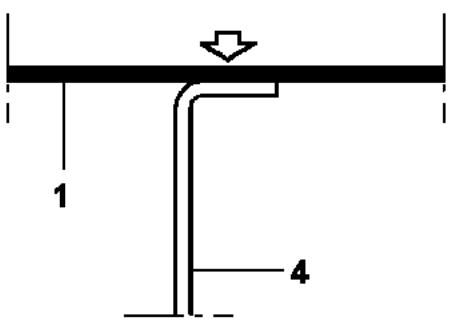

14589

GETtheMANUALS.org

Replacement using cut a

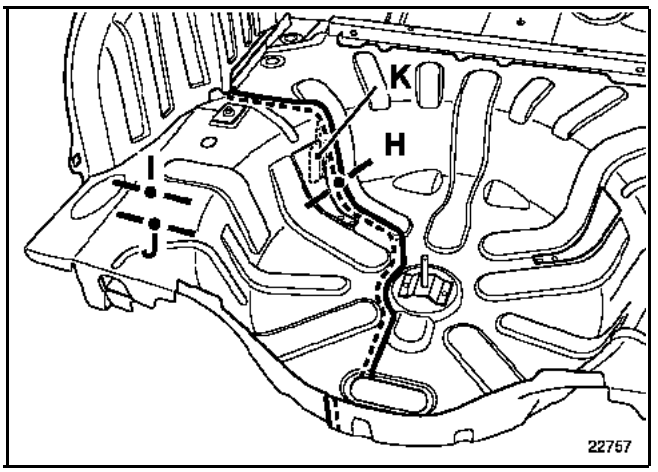

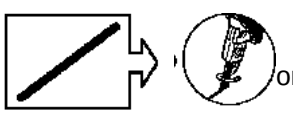
on the replacement part

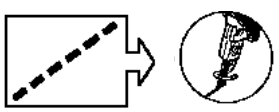
on the vehicle

IMPORTANT:
Protect the central underfloor cross member (K) when cutting.

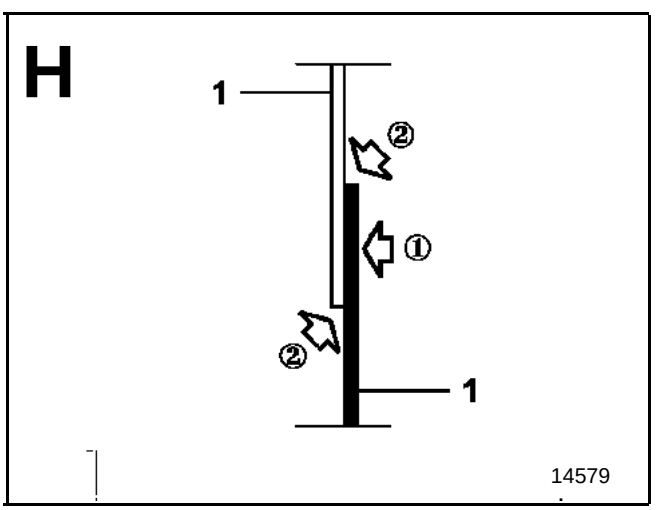

① on the replacement part

② X2

②

NOTE:
The number of plug welds is not specified, it is necessary to leave a gap of approximately **60 mm** between the welds, then after welding, apply a bead of smooth mastic to the edge (operation ②) to ensure sealing and finish.

Use M.J. Pro type mastic (**part no.: 77 11 172 676**).

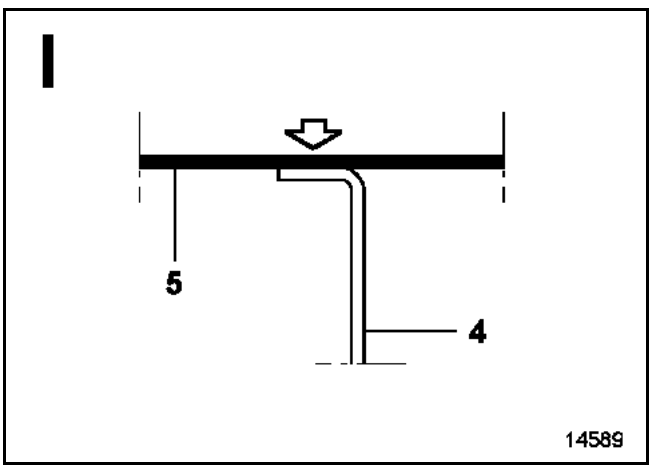

X7

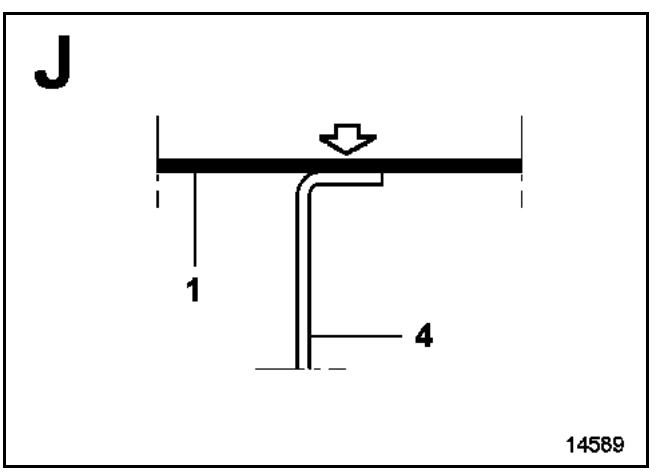

X7

GETtheMANUALS.org

The replacement of this part is a complementary operation to the partial replacement of the rear section of the rear floor following a side impact.

It is part of case no. ② (see the introduction to **Section 40A-C: Description of parts**).

In the procedure described below, you will only find the descriptions and the joints which are specific to the part concerned.

Where spot welds cannot be made with the spot welder, they can be replaced by plug welds.

The information on the additional parts will be dealt with in their respective sections (refer to contents).

This operation is carried out using cut (a).

The body jig bench must be used.

COMPOSITION OF THE REPLACEMENT PART

Part assembled with:
Side member bracket
Sleeve
Reinforcement plate
Crimped nut

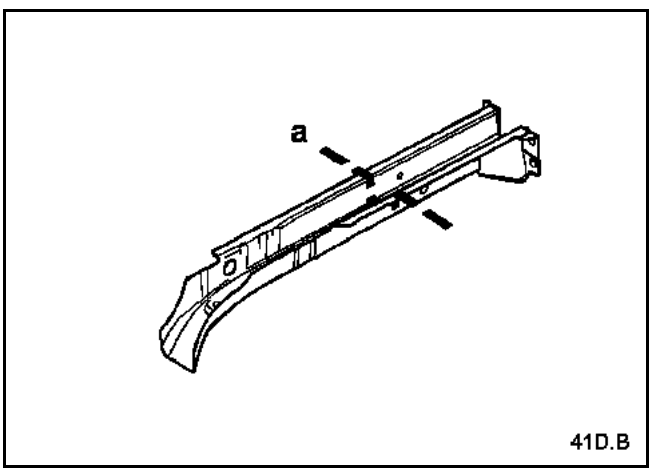

PARTS CONCERNED (thickness in mm):

1 Rear side member, rear section 1.8

Replacement using cut a

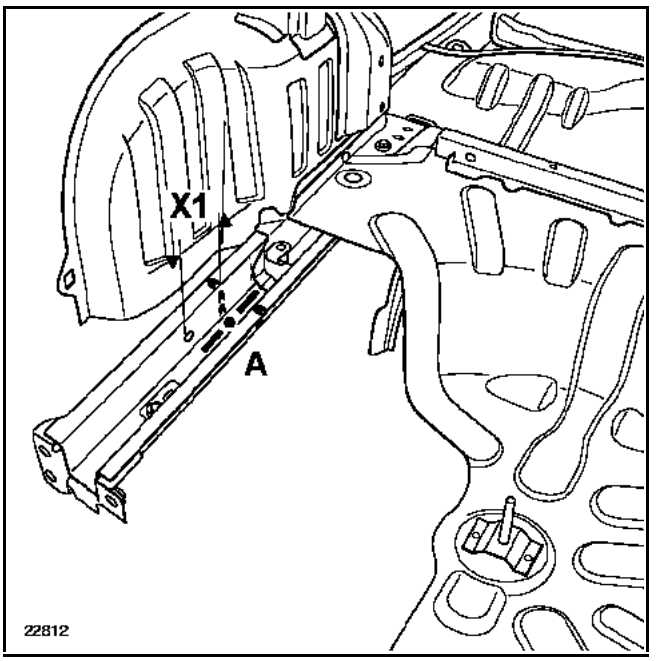

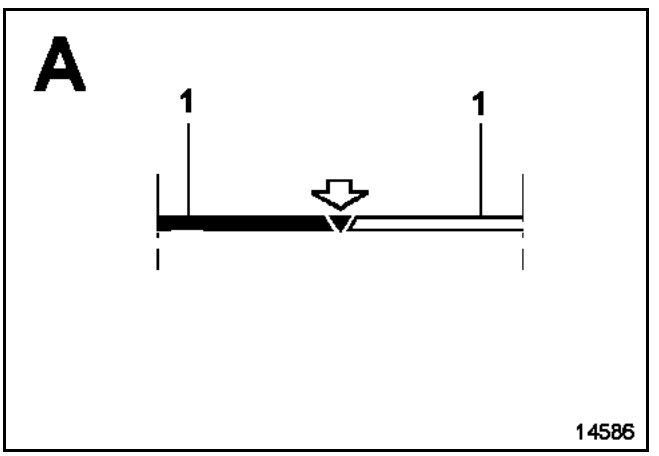

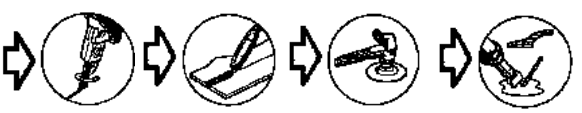

X1: 105 mm

IMPORTANT:
the cut is made in the zone between the side member reinforcement and the pilot hole.
Use dimension **X1** to locate the middle of this zone.

GETtheMANUALS.org

The replacement of this part is a complementary operation to the replacement of the rear section of the rear floor following a rear impact. It is part of case no. ② (see the introduction to **Section 40A-C: Description of parts**).

In the procedure described below, you will only find the descriptions and the joints which are specific to the part concerned.

The information on the additional parts will be dealt with in their respective sections (refer to contents).

The body jig bench must be used.

NOTE: where welds cannot be made by the spot welder, they can be replaced by plugs.

COMPOSITION OF THE REPLACEMENT PART

Part assembled with:
Side reinforcement
Mounting spacer
Inner reinforcement
Rear side cross member
Front spacer
Spacer reinforcements
Rear spacer
Mounting connecting arch
Outer reinforcement
Axle assembly mounting unit
Side member bracket
Sleeve
Reinforcement plate
Crimped nut

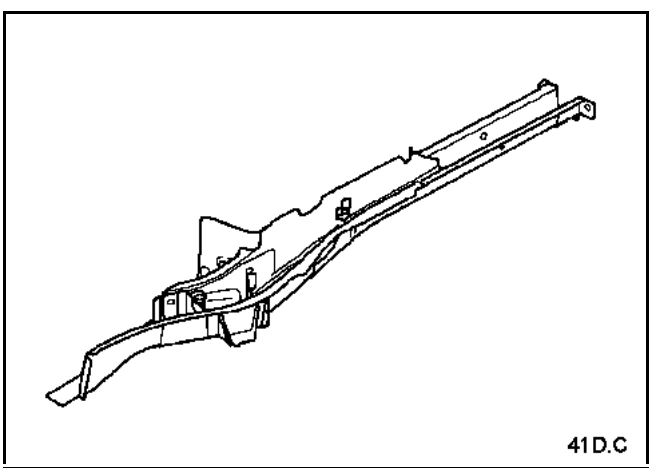

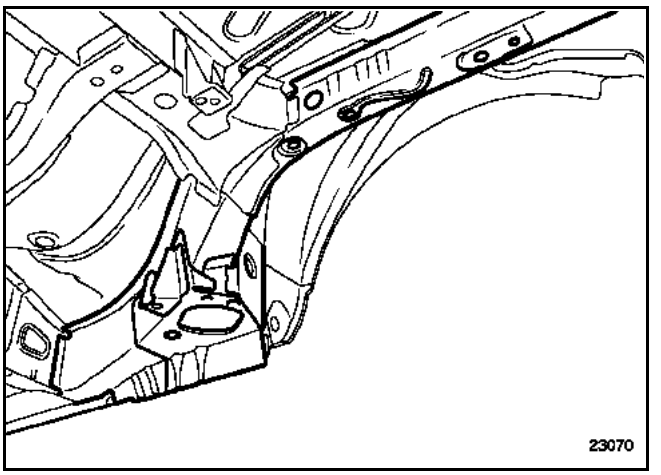

GETtheMANUALS.org

The replacement of this part is an operation linked to the replacement of a rear side member for a rear impact and the rear floor, front section following a rear side impact.

It is part of case n° ① (see the introduction to **Section 40A-C: Description of parts**).

In the procedure described below, you will only find the descriptions and the joints which are specific to the part concerned.

The information on the additional parts will be dealt with in their respective sections (refer to contents).

COMPOSITION OF THE REPLACEMENT PART

Part assembled with:
Exterior hook
Seatback frame mounting reinforcement
Welded nuts

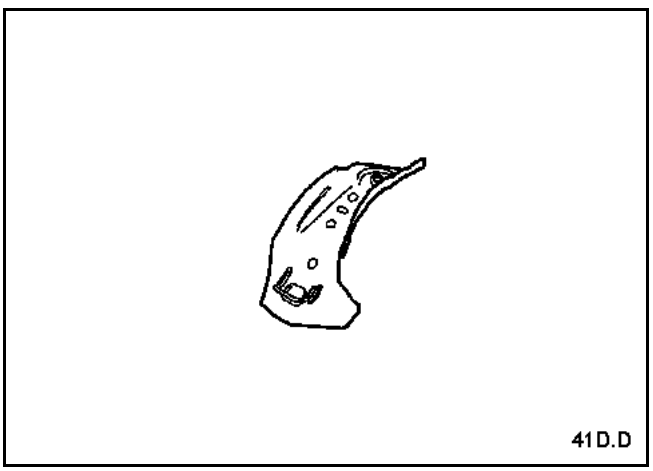

PARTS CONCERNED (thickness in mm):

1	Front section of rear side member closure panel	1.5
2	Rear floor rear section	0.8
3	Inner rear wheel arch	0.8
4	Rear floor, front section	0.7
5	Rear side member	1.8
6	Rear floor centre cross member	1.2

GETtheMANUALS.org

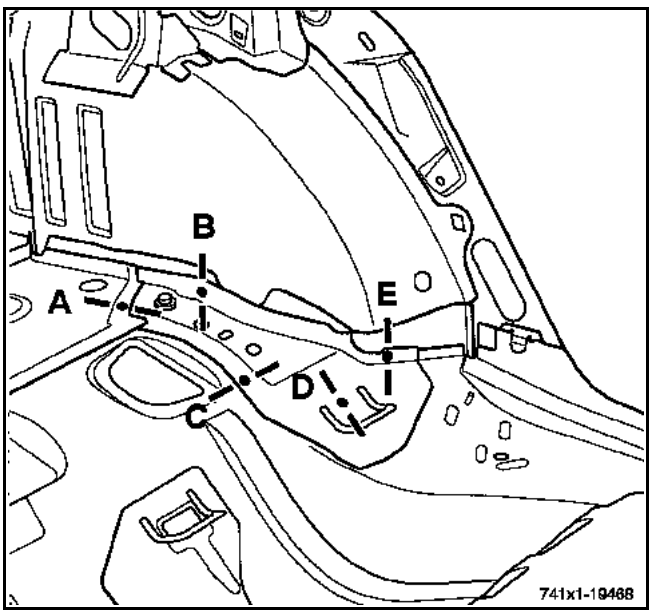

A

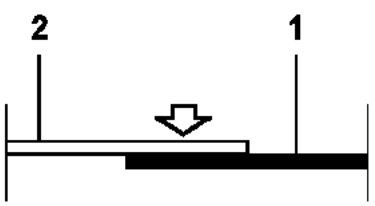

X4

B

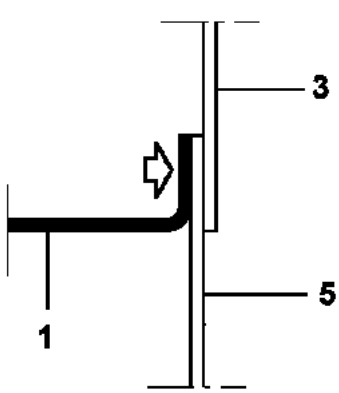

X10

C

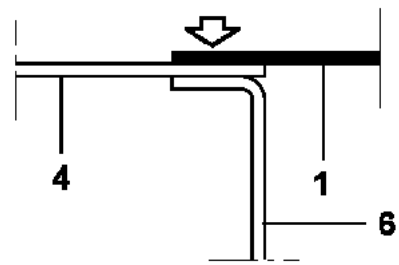

X10

D

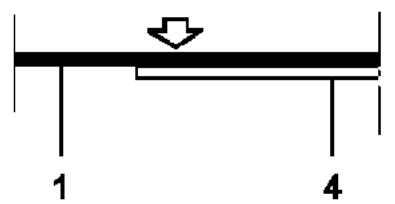

X6

E

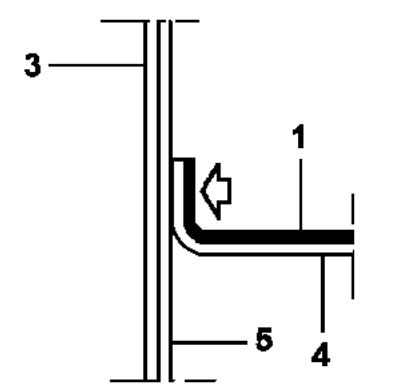

X2

GETtheMANUALS.org

The replacement of this part is a complementary operation to the replacement of the sill panel closure panel or the inner wheel arch following a rear side impact.

It is part of case n° ② (see the introduction to **Section 40A-C: Description of parts**).

In the procedure described below, you will only find the descriptions and the joints which are specific to the part concerned.

The information on the additional parts will be dealt with in their respective sections (refer to contents).

This operation may be carried out in two ways (refer to the procedure below):
– using cut (a),
– or complete.

NOTE:
To perform this operation, it is essential to remove the side closure panel of the rear side member, which must then also be ordered.

For a replacement along cut (a) which is performed by overlapping panels, the number of plug welds is not specified in the procedure.
A distance of approximately **60 mm** must be used between the welds.

COMPOSITION OF THE REPLACEMENT PART

Part assembled with:
Reinforcements
Interior hook

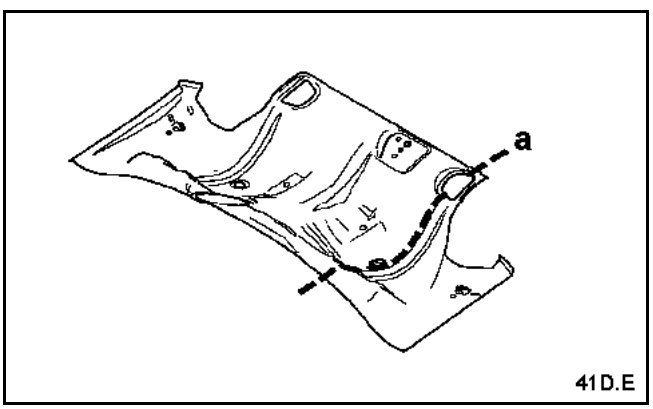

PARTS CONCERNED (thickness in mm):

1	Rear floor, front section	0.7
2	Rear floor front cross member	1.2
3	Rear floor front cross member closure panel	1
4	Rear side member	1.8

GETtheMANUALS.org

Replacement using cut a

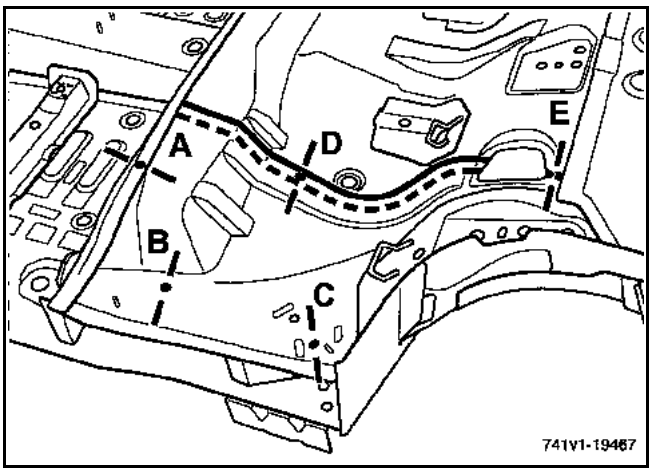

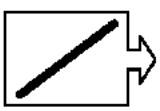

on replacement part

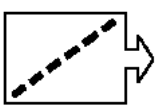

on the vehicle

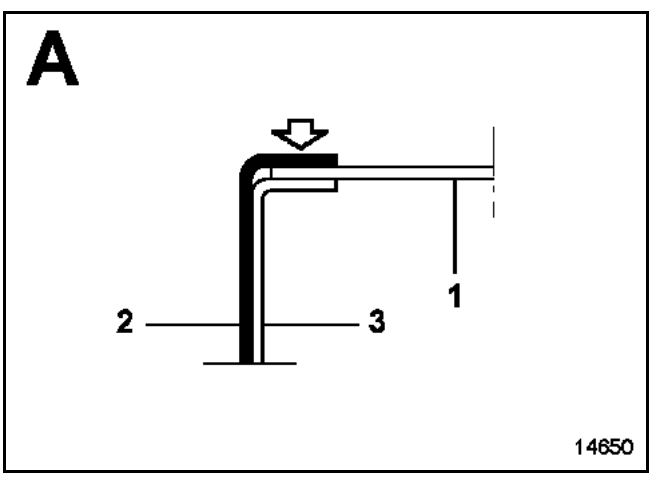

X7

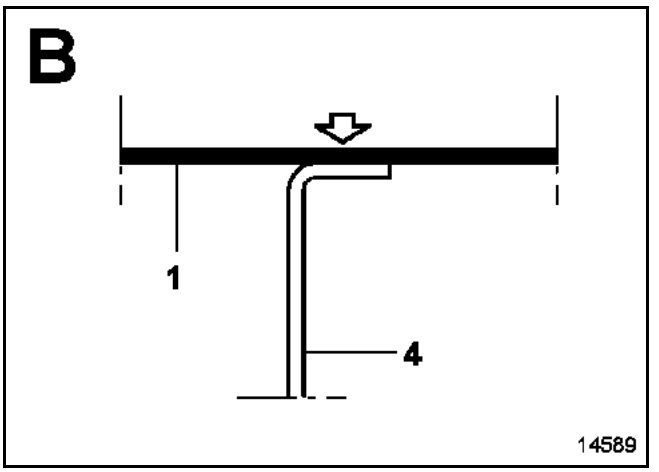

X9

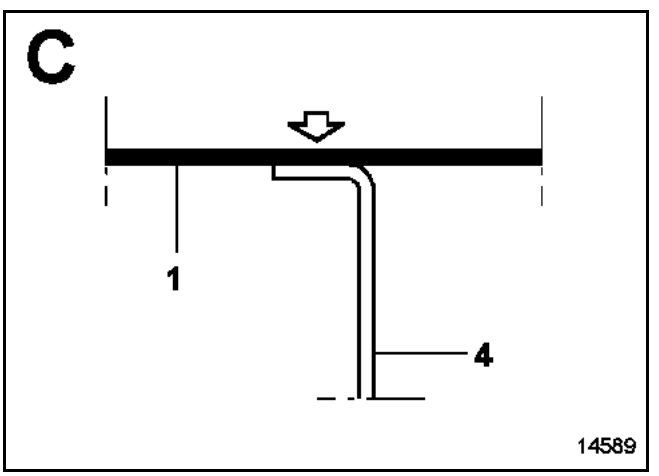

X4

GETtheMANUALS.org

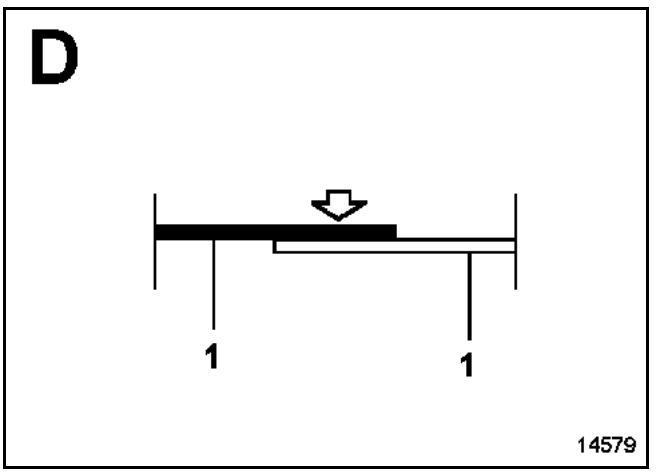

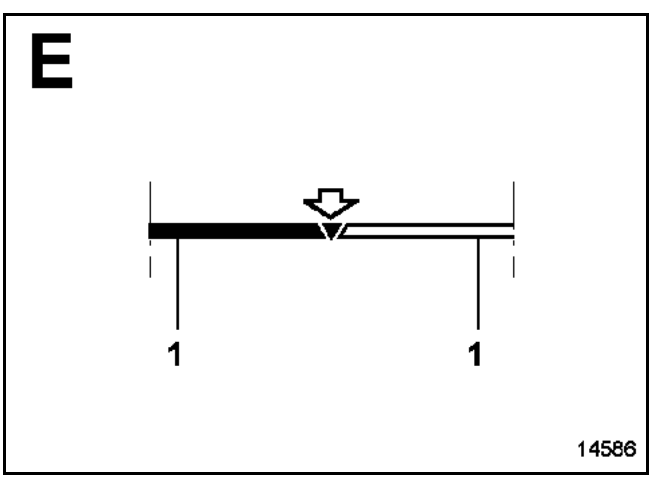

GETtheMANUALS.org

Complete replacement

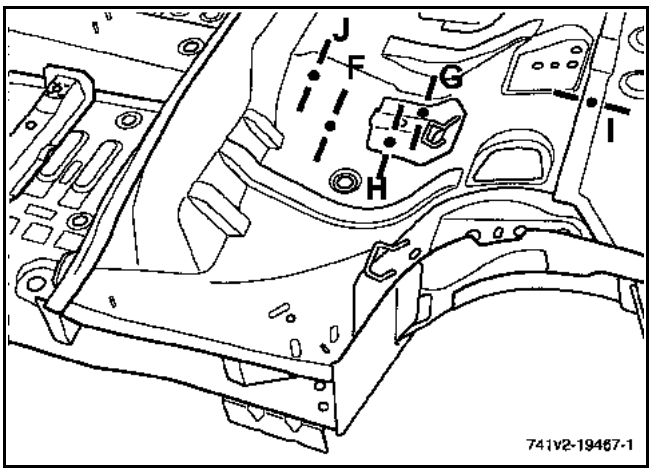

F

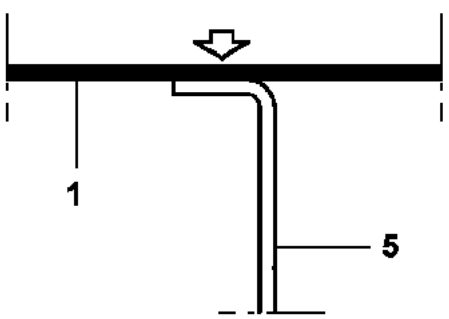

G

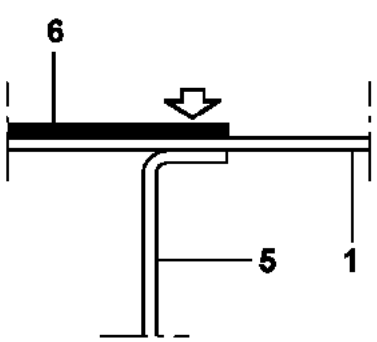

H

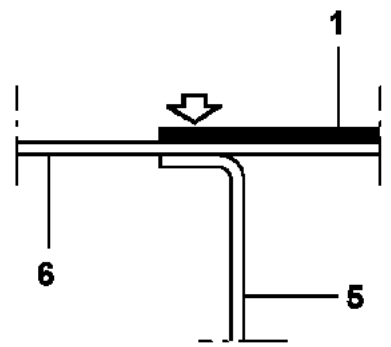

I

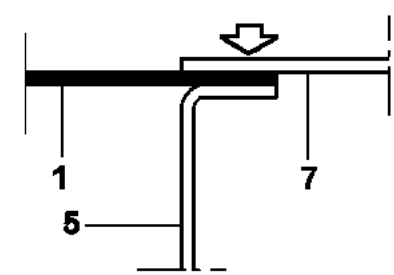

J

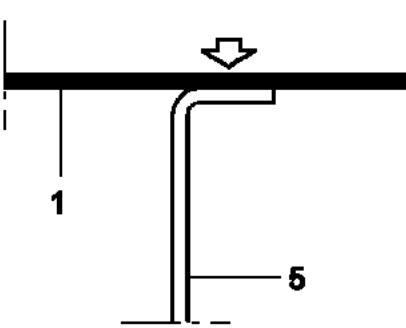

GETtheMANUALS.org

The replacement of this part is a complementary operation to the replacement of the sill panel closure panel for a side impact.

It is part of case n° ① (see the introduction to **Section 40A-C: Description of parts**).

In the procedure described below, you will only find the descriptions and the joints which are specific to the part concerned.

The information on the additional parts will be dealt with in their respective sections (refer to contents).

This operation is partially carried out using cut (a).

COMPOSITION OF THE REPLACEMENT PART

Part assembled with:
Retaining plates
Rivet

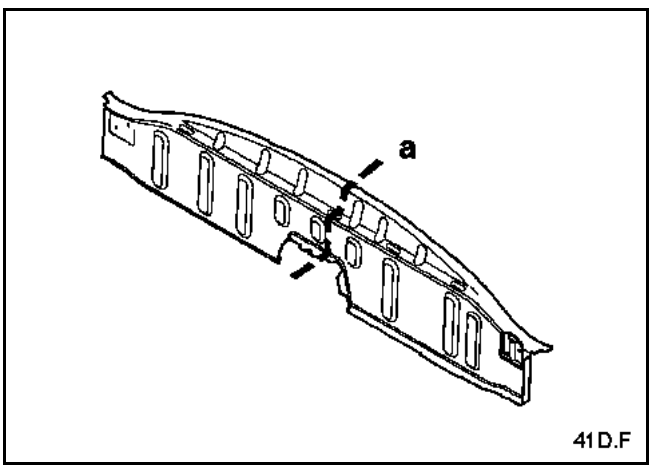

PARTS CONCERNED (thickness in mm):

1	Rear floor front cross member	1.2
2	Rear floor front cross member closure panel	1
3	Rear floor, front section	0.7
4	Tunnel	1.2
5	Central floor, side section	1.2/0.8
6	Front side member, rear section	2

GETtheMANUALS.org

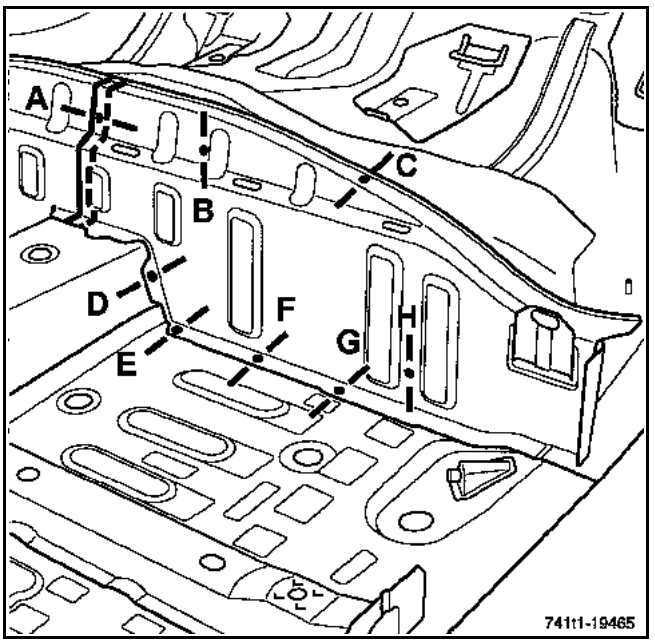

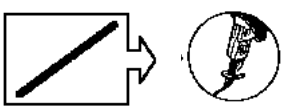
on replacement part

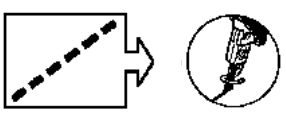
on the vehicle

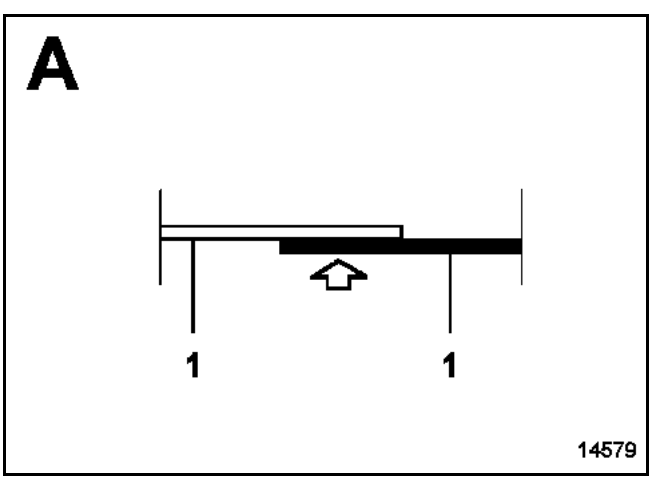

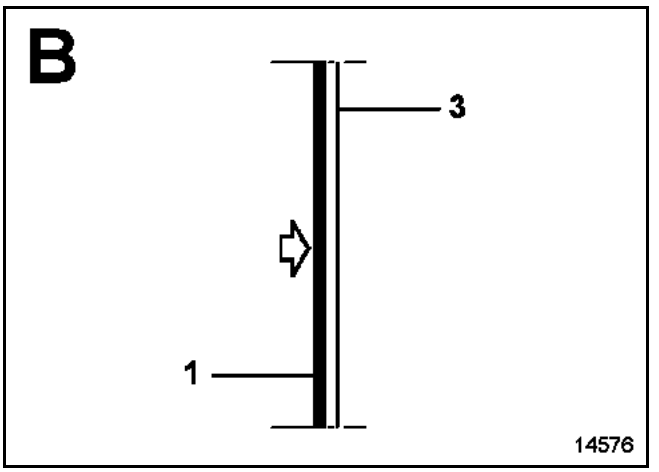

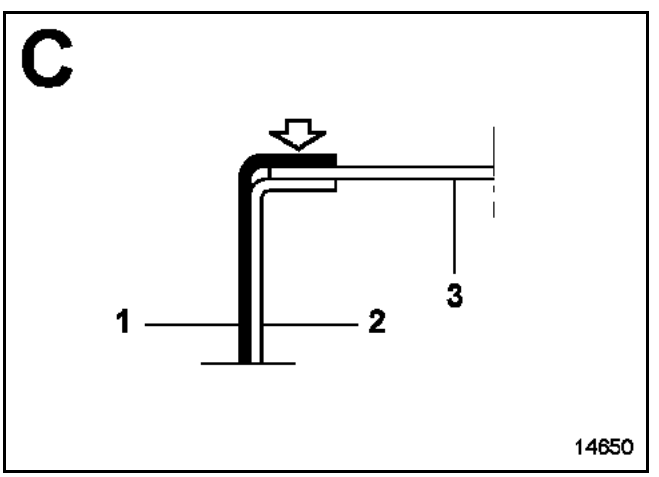

GETtheMANUALS.org

D

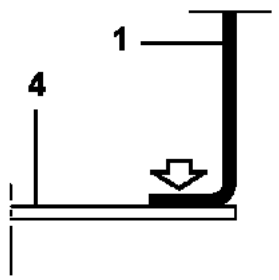

14593-1

F

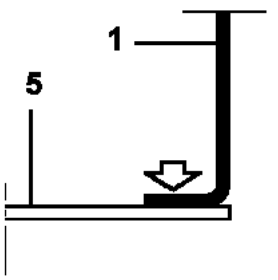

14593-1

E

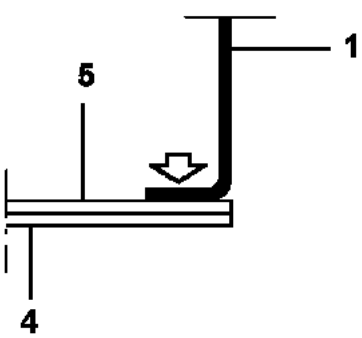

14635-2

G

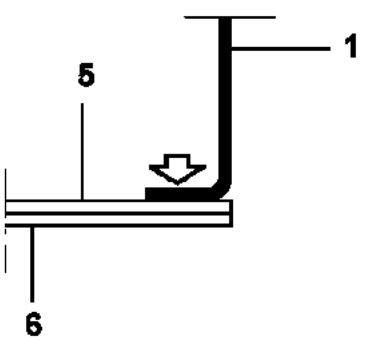

14635-2

REMINDER:
as spot welds can be accessed with the spot welder, they are not shown in the procedure.

GETtheMANUALS.org

The replacement of this part is a complementary operation to the replacement of the rear floor front cross member following a side impact.

It is part of case n° ① (see the introduction to **Section 40A-C: Description of parts**).

In the procedure described below, you will only find the descriptions and the joints which are specific to the part concerned.

The information on the additional parts will be dealt with in their respective sections (refer to contents).

This operation is partially carried out using cut (a).

COMPOSITION OF THE REPLACEMENT PART

Part assembled with:
Mounting bracket
Tank support
Cross member
Crimped nuts

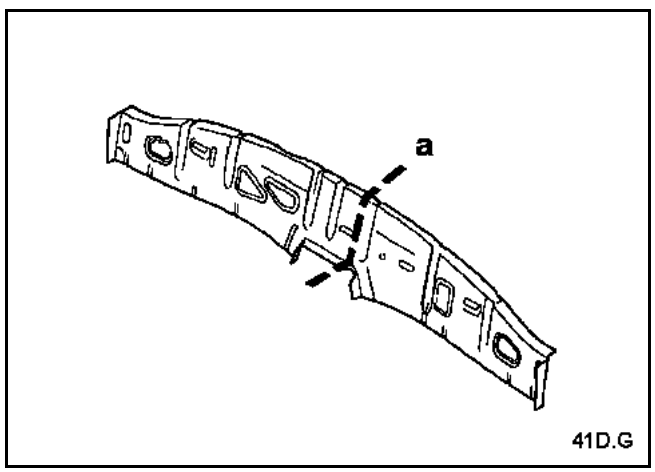

PARTS CONCERNED (thickness in mm):

1	Rear floor front cross member closure panel	1
2	Tunnel	1.2

GETtheMANUALS.org

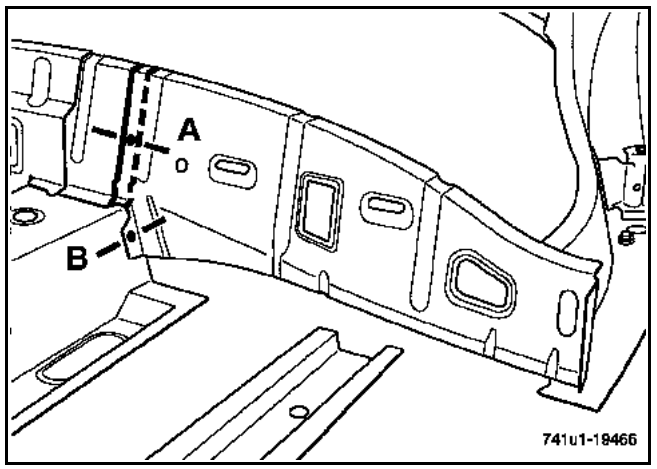

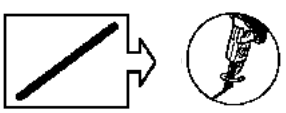
on replacement part

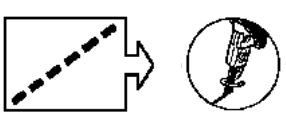
on the vehicle

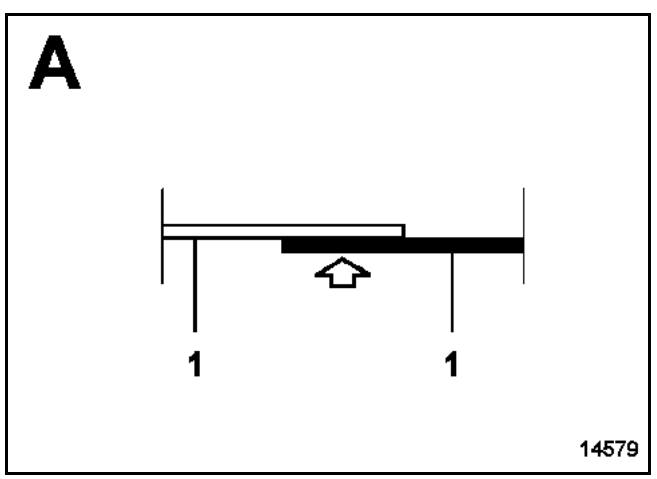

X5

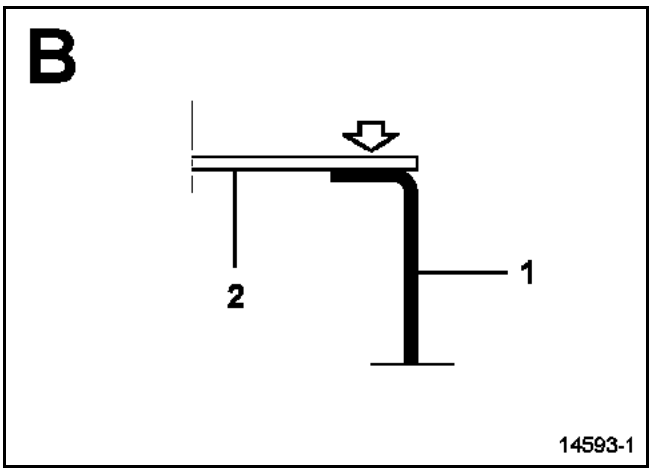

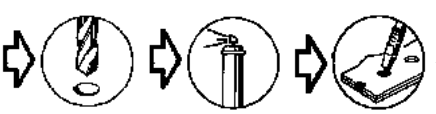
X2

GETtheMANUALS.org

The replacement of the cross member under the rear floor is a complementary operation to the rear side member for a rear impact or the rear floor, front section for a rear side impact.

It is part of case no. ② (see the introduction to **Section 40A-C: Description of parts**).

The information on the additional parts will be dealt with in their respective sections (refer to contents).

NOTE: this operation presents no particular difficulties.

You will find one or more diagrams of the part either on the vehicle or removed from it in the procedure for your information.

Where spot welds cannot be made with the spot welder, they can be replaced by plug welds.

The body jig bench must be used.

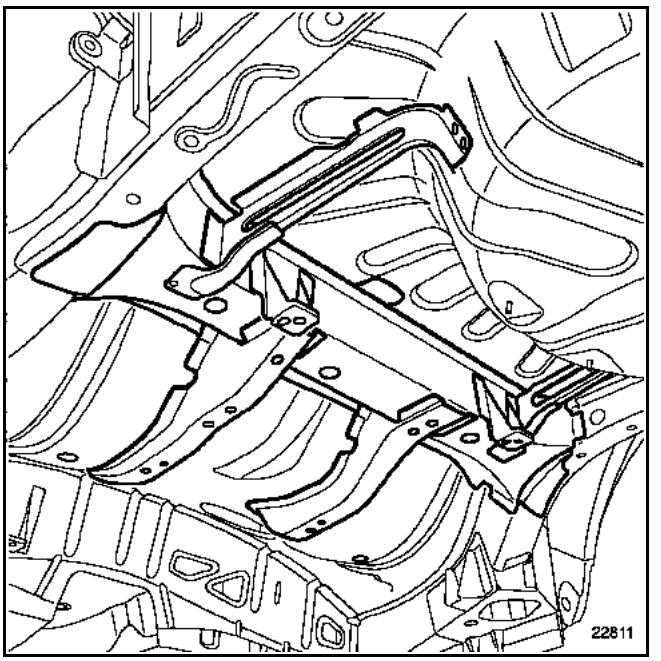

COMPOSITION OF THE REPLACEMENT PART

Part assembled with:
Cross member
Acoustic angle bracket
Mounting support
Crimped nut
Central reinforcement
Seatback mounting reinforcement
Welded nut
Spacers
Reinforcement plates

GETtheMANUALS.org

The replacement of the rear floor unit is a complementary operation to the rear end panel for a rear impact or the inner wheel arch for a rear side impact.

It is part of case no. ② (see the introduction to **Section 40A-C: Description of parts**).

The information on the additional parts will be dealt with in their respective sections (refer to contents).

The body jig bench must be used.

COMPOSITION OF THE REPLACEMENT PART

Part assembled with:
Complete rear floor
Rear floor, complete front section
Complete side members
Complete cross member and closure panel

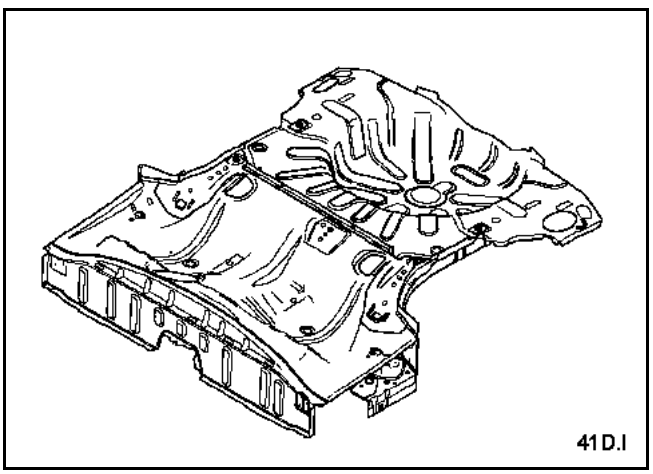

GETtheMANUALS.org

The replacement of this part is a basic operation after a frontal and side collision. Information on additional parts or stripping parts will be dealt with in the appropriate sections.

It is a detachable bodywork component made from a sheet moulded polyester compound (SMC).

NOTE: The removal/refitting operations present no particular problems, only the adjustment options are described in the procedure.
All the clearances are shown in **section 40A-E**.

REPAIR

To repair this component refer to the Workshop Repair Manual **502**.

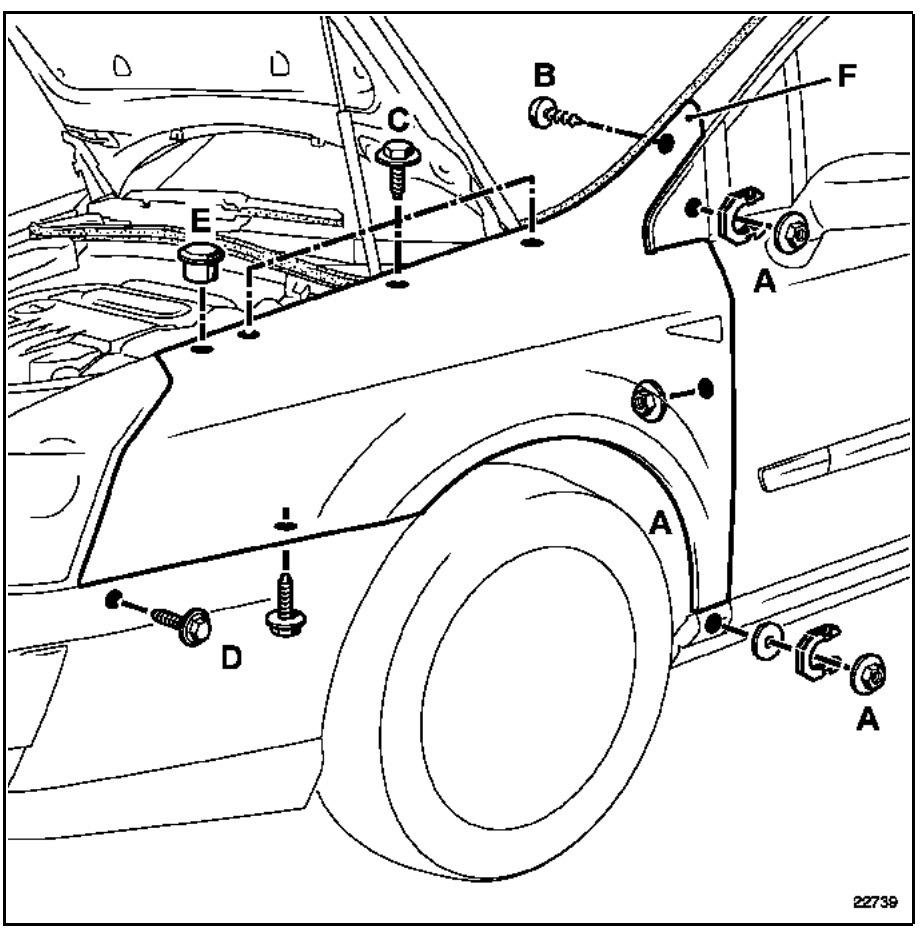

GETtheMANUALS.org

NOTE:
To access the wing mountings it is first necessary to remove:
– the scuttle grille side section,
– the engine side cowling,
– the A-pillar trim,
– the upper wing trim,
– the wheel arch liner,
– the front section of the sill panel protector,
– the side mounted indicator,
– the front bumper,
– the headlight unit.

WARNING: after refitting the wing, it is essential to replace the original mastic bead located on the upper section (F), with the special foam blanking cover (I) after-sales part no.: **82 00 218 945.**

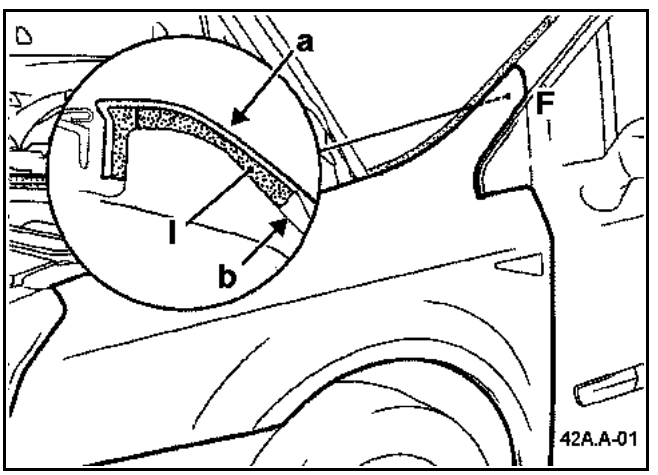

a: front wing
b: scuttle side panel upper rear stiffener

GETtheMANUALS.org

ADJUSTMENT

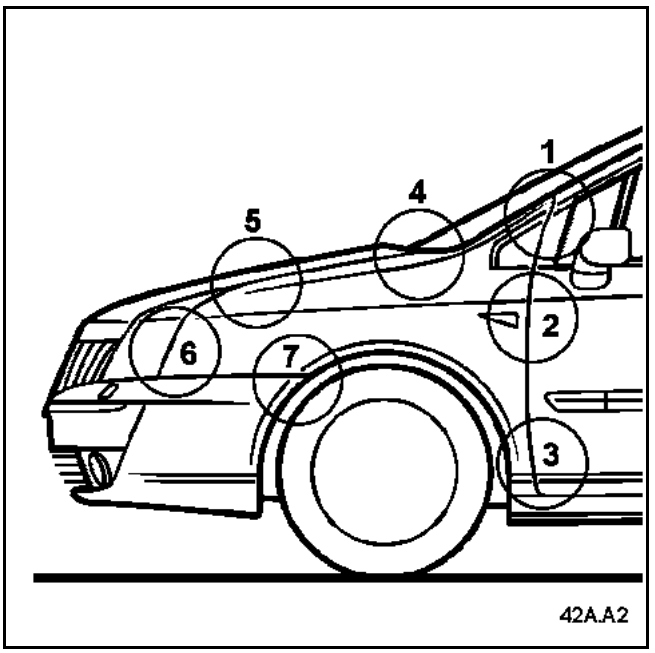

Fit the interior mounting pressure piece (G) and all the clips onto the wing.
Position the wing on the vehicle.
Finger tighten all the attachments.

REMINDER: All the clearances and flush fitting positions are listed in **section 40A-E**.

Adjust in the following sequence:

1. **Wing - Door adjustment**
   Ensure the clearances and flush fitting of areas 2 and 3 by aligning the wing stop with the door (nuts A).
   Check the adjustment and clamp the area.

2. **Wing - A-pillar adjustment:**
   Ensure the clearances and flush fitting of area 1 (bolt B).
   Check the adjustment and clamp the area.

3. **Wing - Bonnet adjustment:**
   Check the flush fitting and a regular clearance of areas 4 and 5 (bolt C), if necessary modify the bonnet adjustment
   Fit the front upper cross member indexing dowel (E).
   Check the adjustment and clamp the area.

4. **Wing - Headlight - Bumper adjustment:**
   Check the play and flush fitting of areas 6 and 7 (bolt D).

Change the light unit setting if necessary.

NOTE: the bumper cannot be adjusted, it is fitted into the lower wing pressure piece.

Replacing the lower pressure piece

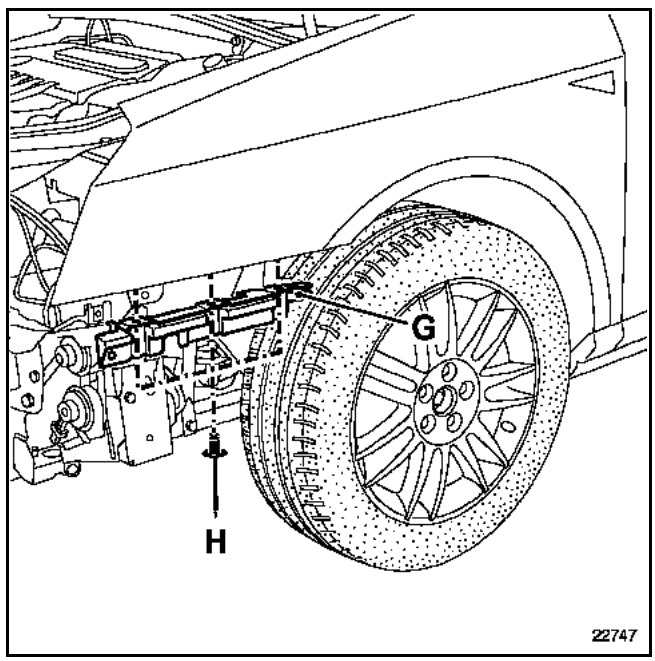

NOTE: If the bumper has suffered an impact it is possible to just replace the pressure piece (G) which is available from the Parts Department.
The pressure piece can be replaced with the front wing in position on the vehicle. It is essential to use special rivets (H) part no: **77 01 054 372.**

GETtheMANUALS.org

Replacing this part is a supplementary operation to changing a wing or front bumper after a frontal collision.

It is included in case no. ② (see the introduction to **section 40A-C Description of parts**).

The information on the additional parts will be dealt with in the corresponding sections (refer to contents).

NOTE: this operation presents no particular difficulties.

You will find in the procedure one or more drawings showing the part either on the vehicle or offset.

Where spot welds cannot be made with the spot welder, they can be replaced by plug welds.

STRUCTURE OF THE REPLACEMENT PART

Part assembled with crimped screw.

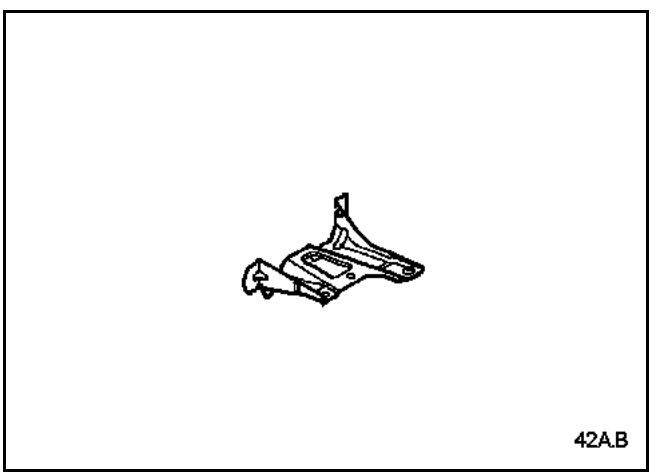

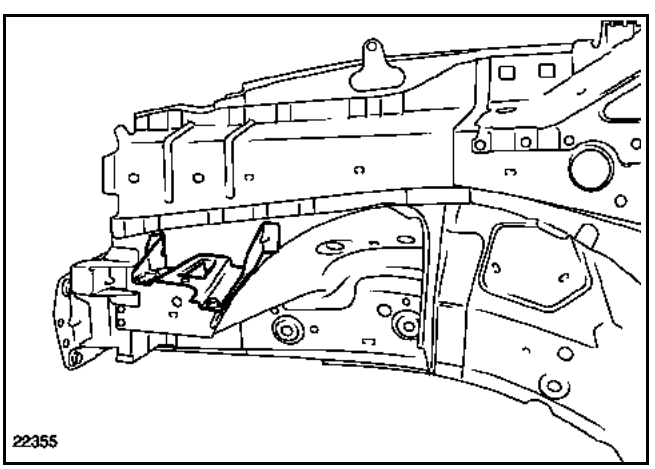

NOTE: to correctly position the replacement part it is advisable to use the marks left by the removed part. If not, carry out clean mounting of the bumper and wing.

GETtheMANUALS.org

The replacement of this part is a supplementary operation after a frontal impact

It is a removable bodywork component.

It is included in case no. ② (see introduction to **section 40A-C Description of parts**).

The information on the additional parts will be dealt with in the corresponding sections (refer to contents).

In the following operation, you will only find the positions of the mountings specific to the component.

STRUCTURE OF THE REPLACEMENT PART

Part assembled with:
Cross member supports
Hook retaining element
Support bracket
Mounting bridge pieces
Index bracket
Inviolability bracket
Crimped nuts

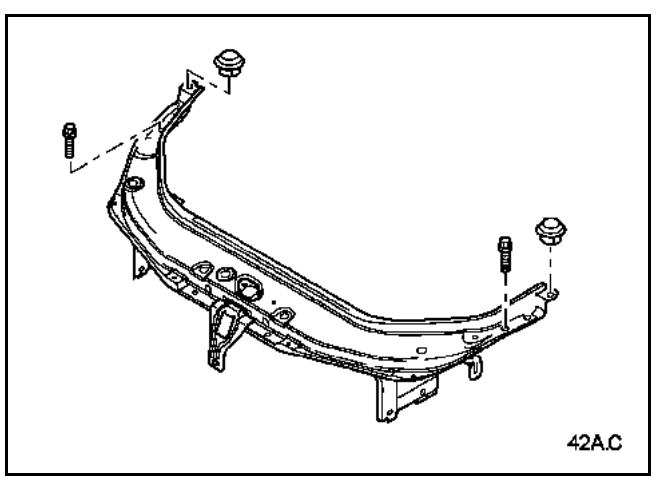

NOTE: to remove the front upper cross section, it is necessary:
- firstly to remove:
  - the front bumper,
  - the headlight units.
- and to disengage:
  - the bonnet catch,
  - the electrical wiring harnesses and the various parts attached to the cross member.

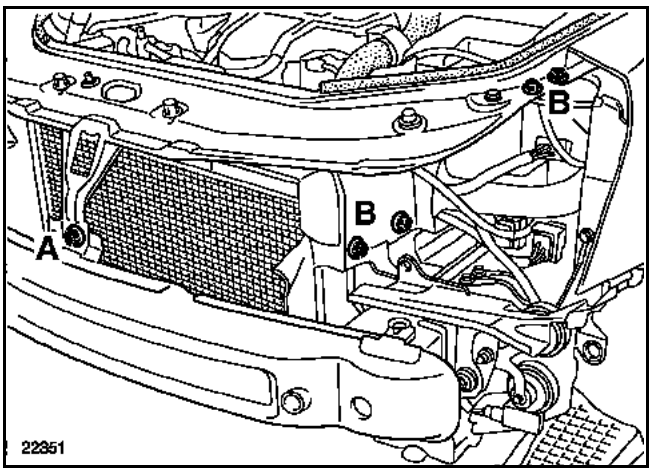

Removal/refitting is by way of central bolt (A) and the side mounting bolts (B).

GETtheMANUALS.org

Replacing this part is a supplementary operation to replacing the front wing and bumper after a frontal impact.

It is a removable bodywork component.

The information on the additional parts will be dealt with in the corresponding sections (refer to contents).

In the following operation, you will only find the mounting positions specific to that component and the adjustment options.

STRUCTURE OF THE REPLACEMENT PART

Part assembled with:
Crimped nuts
Mounting bracket

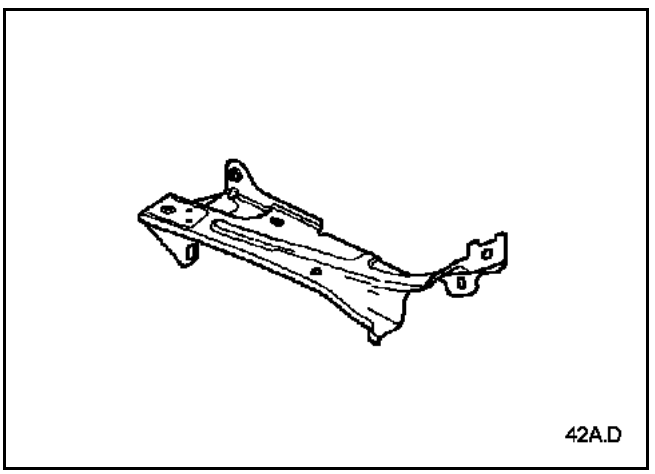

NOTE: to access the headlight carrier panel, the following needs to be removed first:
– the front bumper,
– the headlight unit.

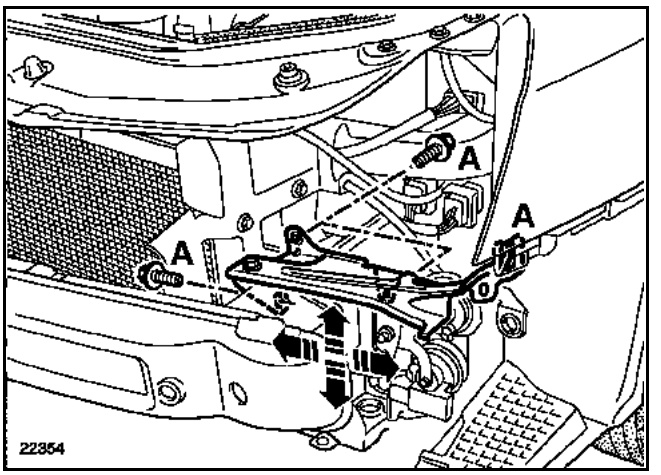

Removal/refitting is by way of bolts (A).

Only side-to-side (**YO**) and height adjustments (**ZO**) are possible.

GETtheMANUALS.org

The replacement of the front section of this part is a basic operation for a frontal impact. The replacement of the rear section is a supplementary operation to replacing the A-pillar after a side impact.

The operation involves removing the scuttle side panel upper stiffeners.

In the following procedure, you will find only the descriptions and the joints which are specific to the part concerned.

The information on the additional parts will be dealt with in their corresponding sections (refer to contents).

The replacement can be carried out in two ways (refer to procedure below):
– complete removal, in addition to the A-pillar,
– along cut (a) in addition to the partial removal of the side scuttle panel upper stiffener.

NOTE: cut (a) cannot be offset (refer to the details in the procedure), if the damage goes beyond this area, it is necessary to replace the complete part.
Where spot welds cannot be made with the spot welder, they can be replaced by plug welds

STRUCTURE OF THE REPLACEMENT PART

Part assembled with:
Mounting bracket upper stiffener
Wing lower mounting component
Cross member support
Upper cross member mounting
Ball-joint mounting
Mounting bridge pieces
Wheel arch closure panel component
Control shaft
Cage
Tapped plate
Crimped nuts
Welded studs

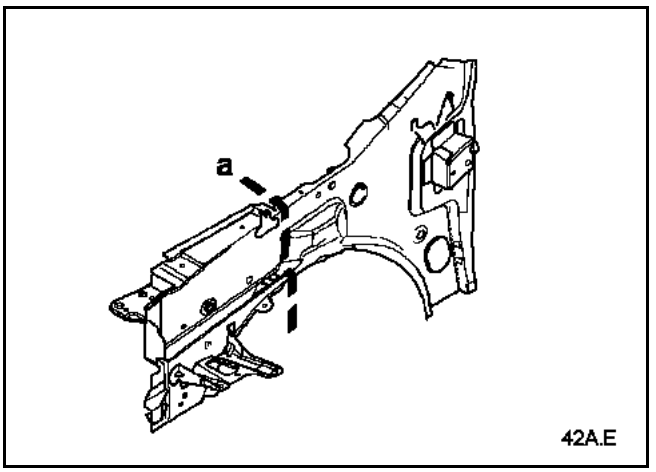

PARTS CONCERNED (thickness in mm):

1 Scuttle side panel	1
2 A-pillar lining	1.2
3 Inner sill panel	1.2

GETtheMANUALS.org

Complete replacement

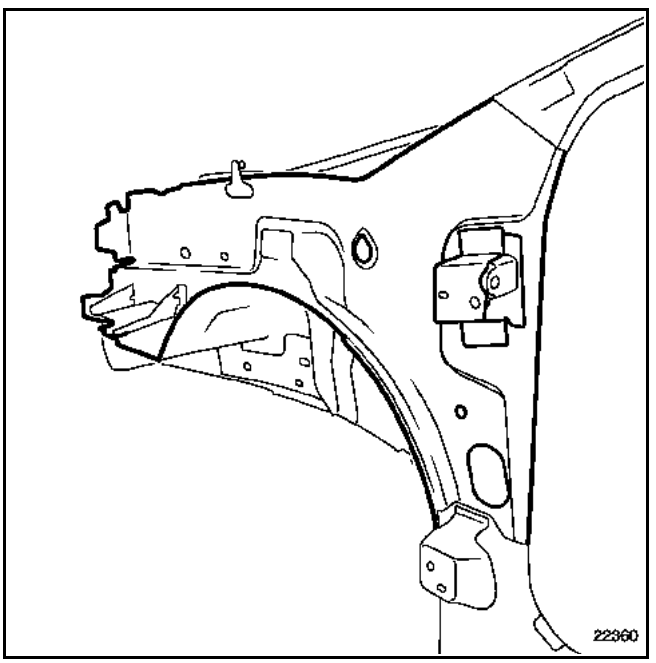

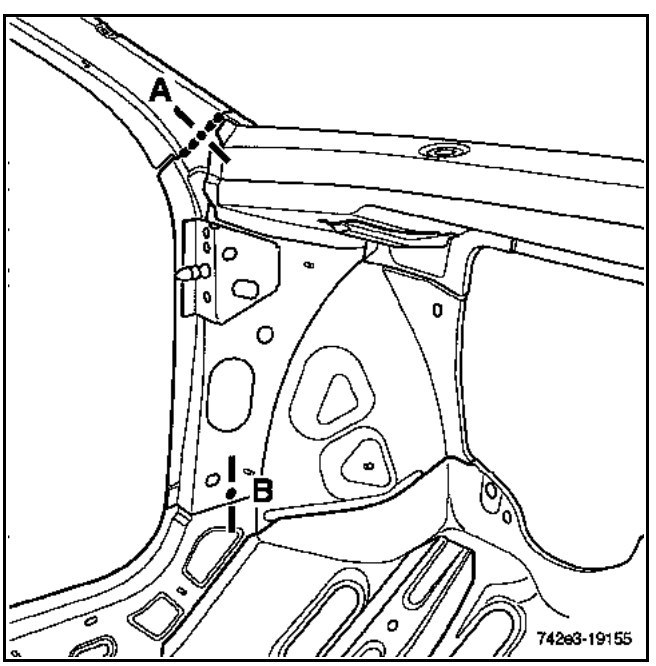

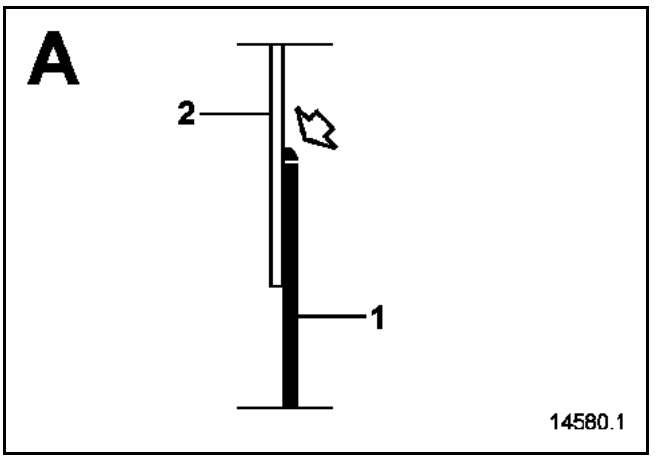

L 60 mm

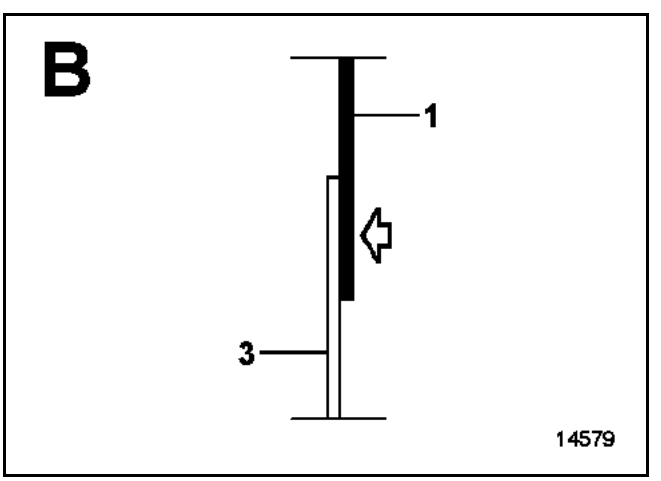

X3

GETtheMANUALS.org

Replacement along cut (a)

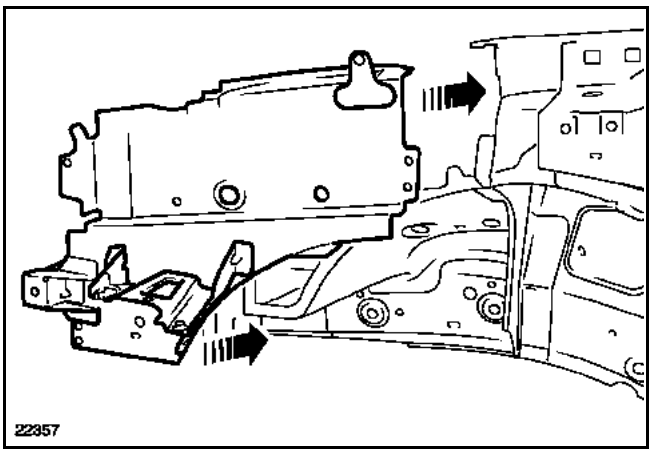

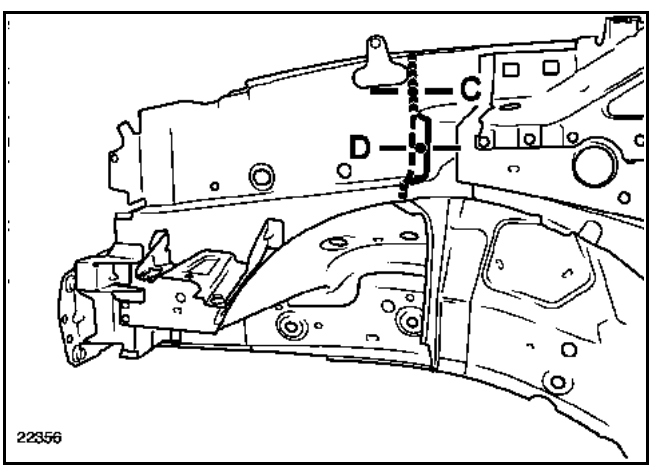

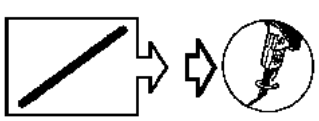
on replacement part

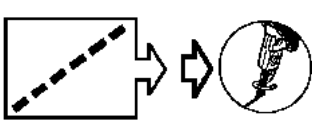
on the vehicle

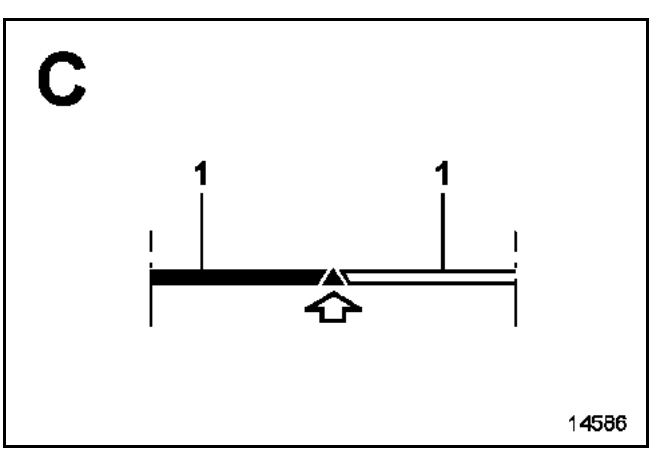

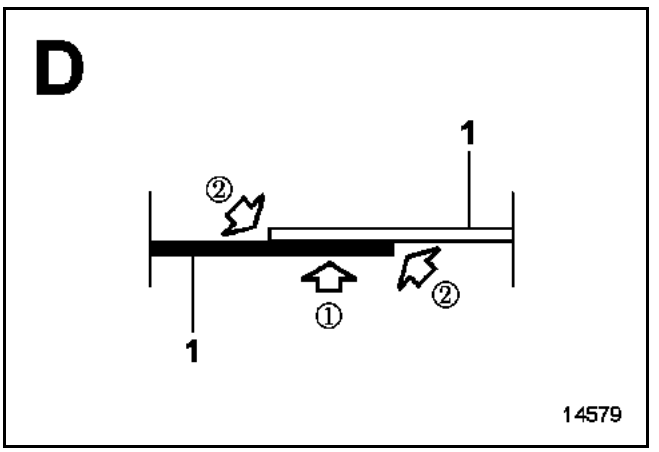

① on replacement part

① X2

②

NOTE: After welding, it is necessary to apply mastic bead in the flange (operation ②) to ensure the mounting face sealing and shape.
Use a M.J.Pro type mastic (**part no.: 77 11 172 676**).

GETtheMANUALS.org

The complete replacement of this part requires the removal of the side scuttle panel rear upper stiffener for a front side impact.

In the procedure described below, you will find only the descriptions and the joints which are specific to the part concerned.

The information on the additional parts will be dealt with in the corresponding sections (refer to contents).

The replacement can be carried out in two ways (refer to procedure method below):
– complete removal, in addition to the scuttle side panel rear upper stiffener,
– along cut (a) additionally, avoiding the removal of the rear upper stiffener.

NOTE: where the welding spots cannot be accessed with the spot welder, they can be replaced by plug welds.

STRUCTURE OF THE REPLACEMENT PART

Part assembled with impact stiffener.

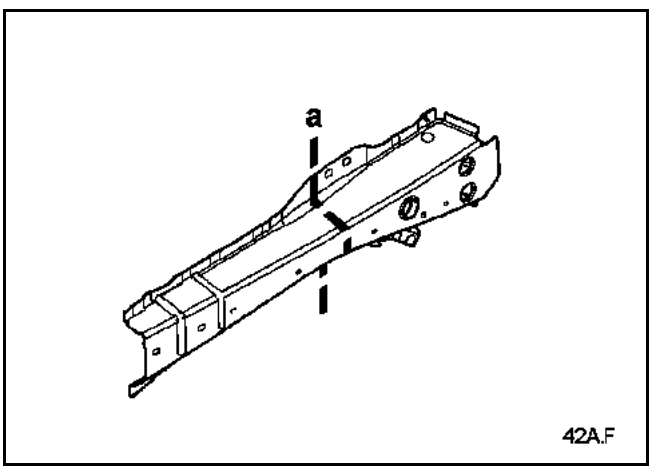

PARTS CONCERNED (thickness in mm):

1	Scuttle side panel upper stiffener	1.2
2	Impact stiffener	1.5

Complete replacement

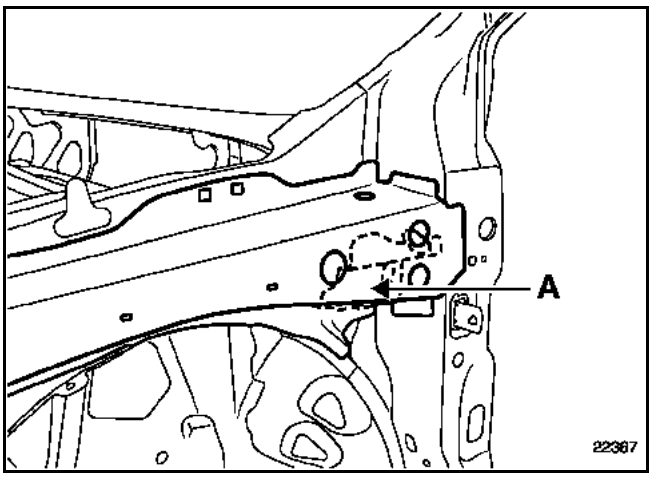

ATTENTION: the two parts have to be disassembled to allow access to the impact stiffener spot welds (A) on the A-pillar.

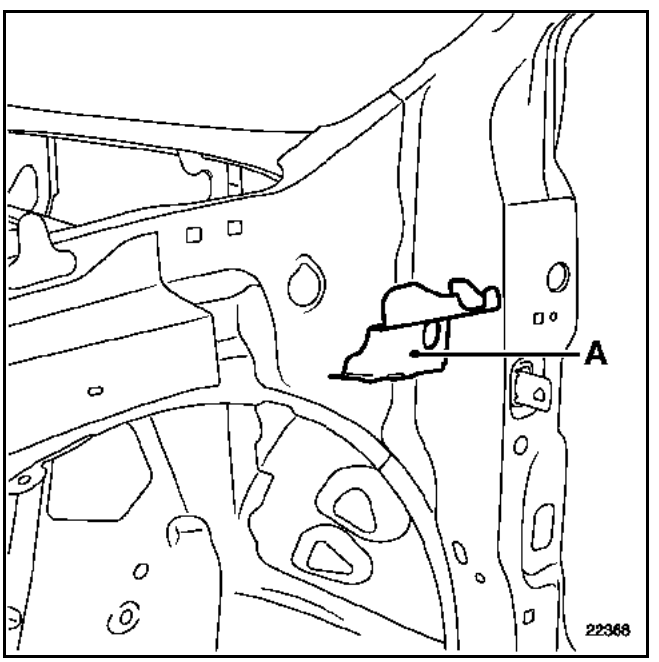

NOTE: In any event, it needs to be detached from the replacement part.

If the impact stiffener is not damaged, leave it on the vehicle.

If it is damaged, plug weld the impact stiffener already removed from the replacement part assembly onto the pillar.

GETtheMANUALS.org

Replacing along cut (a)

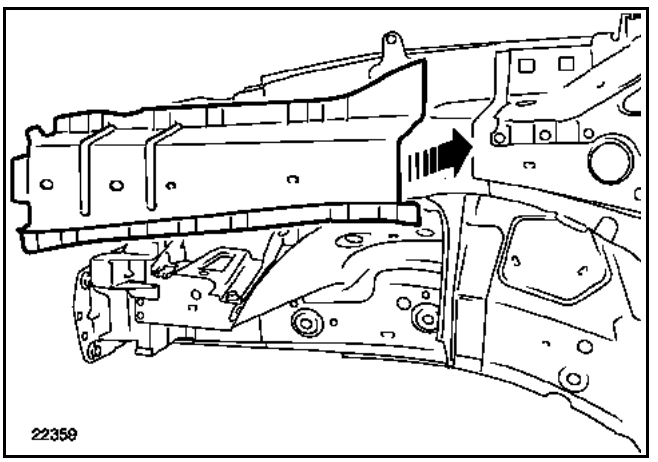

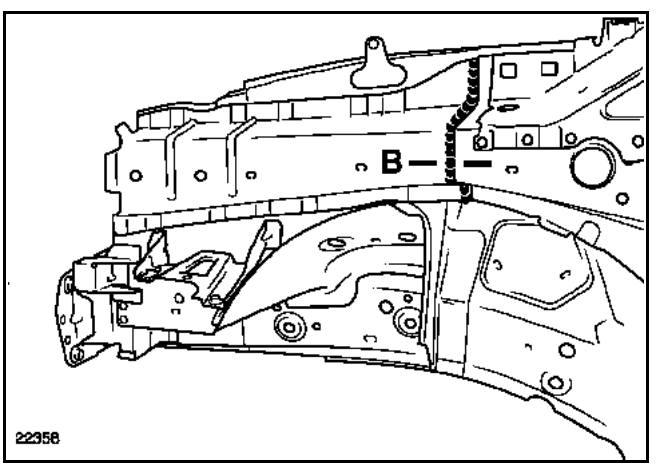

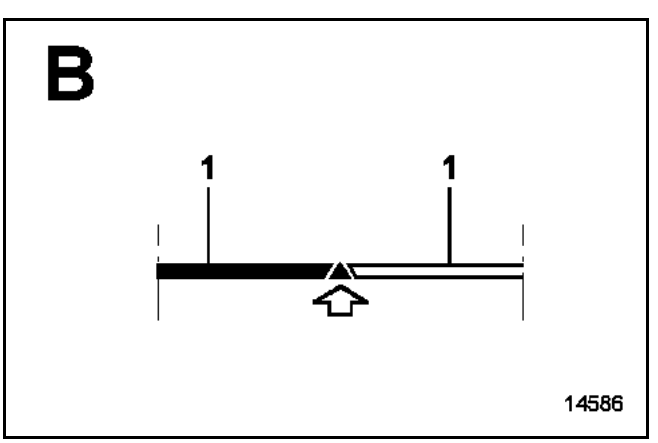

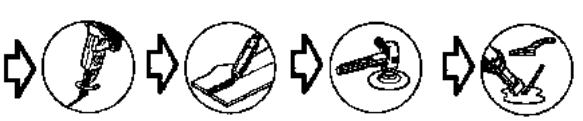

GETtheMANUALS.org

Removal of this part is an operation associated with the replacement of the scuttle side panel upper stiffener after a front side impact.

The information on the additional parts will be dealt with in their corresponding sections (refer to contents).

NOTE: this operation presents no particular difficulties.

You will find one or more drawings of the part either on the vehicle or removed from it in the method for your information.

Where spot welds cannot be made with the spot welder, they can be replaced by plug welds.

STRUCTURE OF THE REPLACEMENT PART

Part supplied on its own.

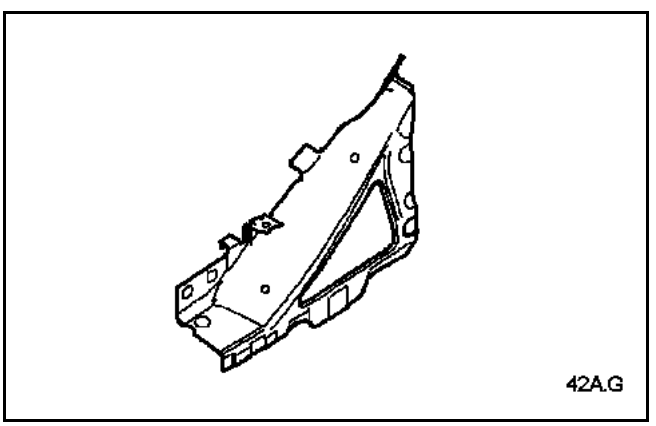

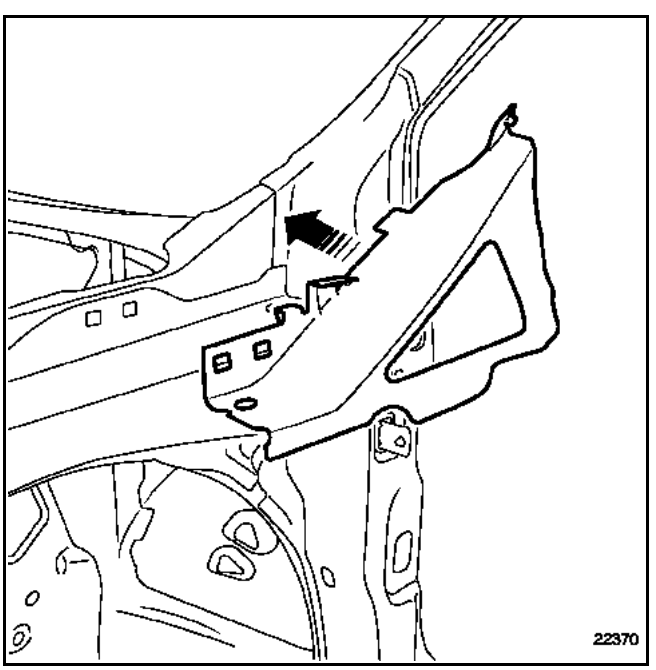

GETtheMANUALS.org

The replacement of this part is supplementary operation to the replacement of a scuttle side panel for a side collision.

It is included in case no. ① (see the introduction to **section 40A-C Description of parts**).

In the procedure described below, you will find only the descriptions and the joints which are specific to the part concerned.

The information on the additional parts will be dealt with in the corresponding sections (refer to contents).

STRUCTURE OF THE REPLACEMENT PART

Part supplied on its own.

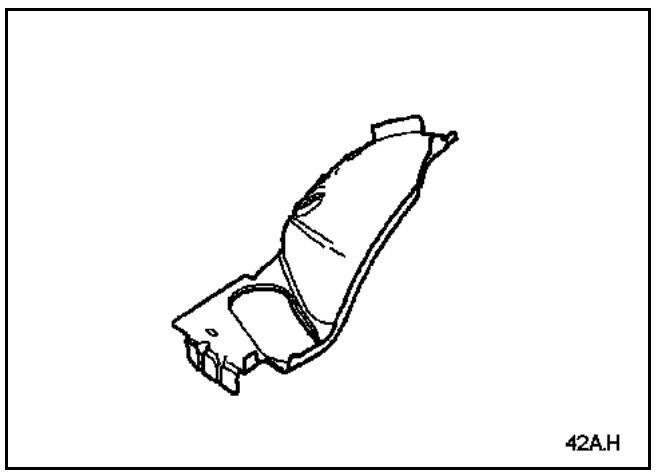

PARTS CONCERNED (thickness in mm):

1	Wheel arch, front section	0.8
2	Front side member closure panel	1.5/2.5
3	Wheel arch	2

GETtheMANUALS.org

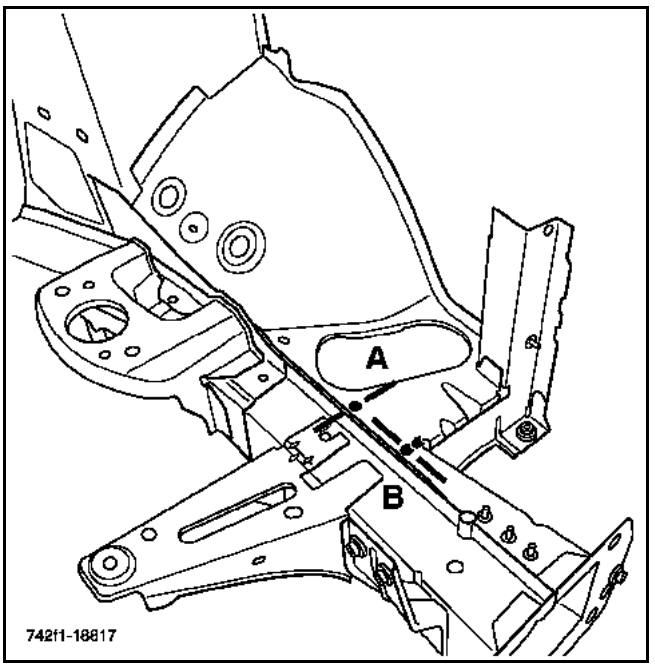

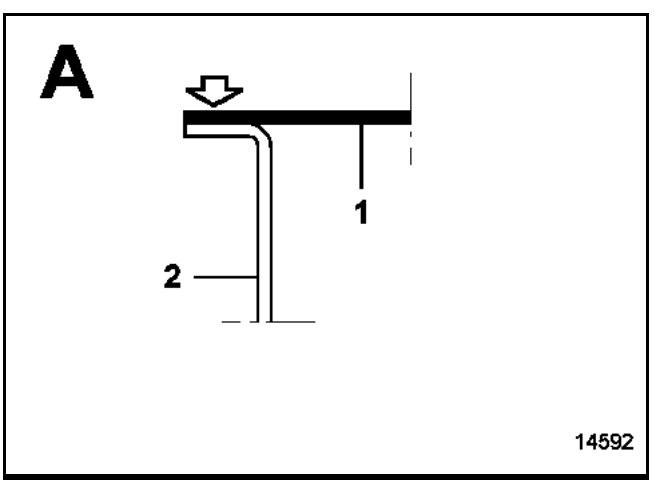

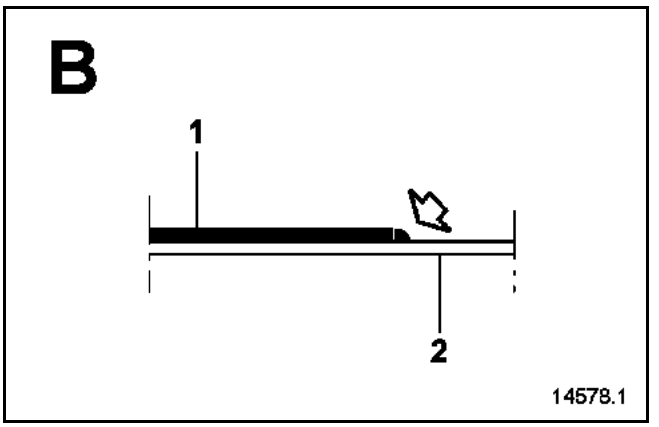

GETtheMANUALS.org

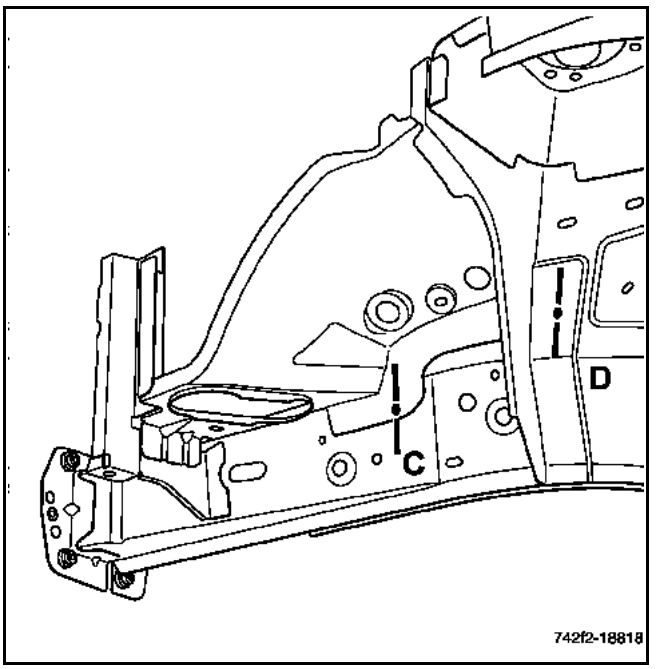

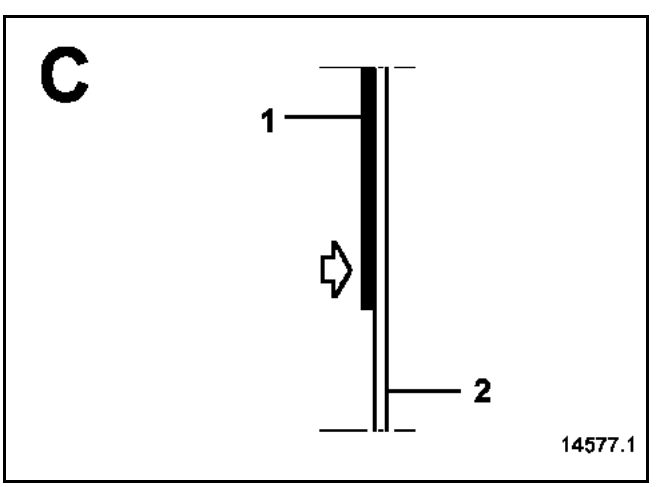

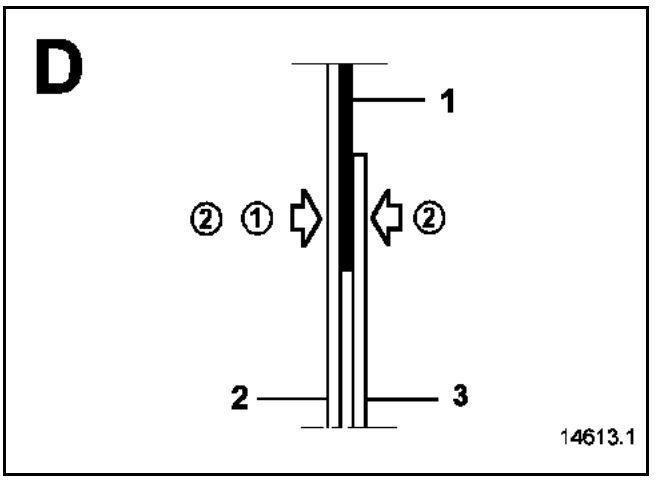

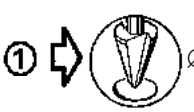

GETtheMANUALS.org

The replacement of this part is a supplementary operation to the partial replacement of the plenum chamber and wheel arch front section.

Information on supplementary parts or stripping parts will be dealt with in the appropriate sections (refer to contents).

This operation may be carried out in several ways (refer to the procedure below):
– complete,
– along cut (a).

NOTE: this operation presents no particular difficulties.

You will find one or more drawings of the part either on the vehicle or removed from it in the method for your information.

Where spot welds cannot be made with the spot welder, they can be replaced by plug welds.

STRUCTURE OF THE REPLACEMENT PART

Part assembled with cup:

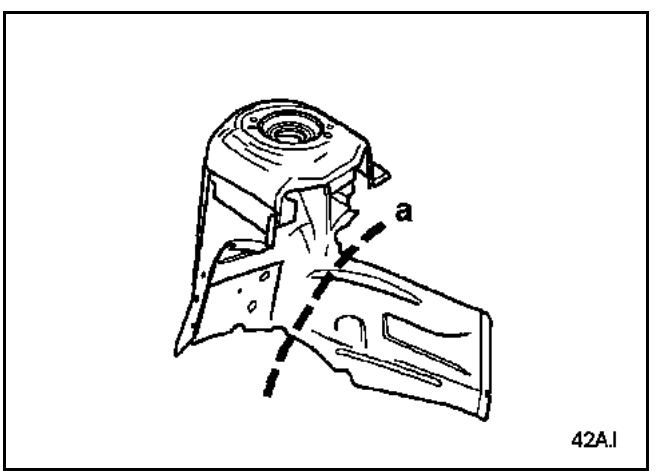

PARTS CONCERNED (thickness in mm):

1 Scuttle side panel	1
2 A-pillar lining	1.2
3 Inner sill panel	1.2

Complete replacement

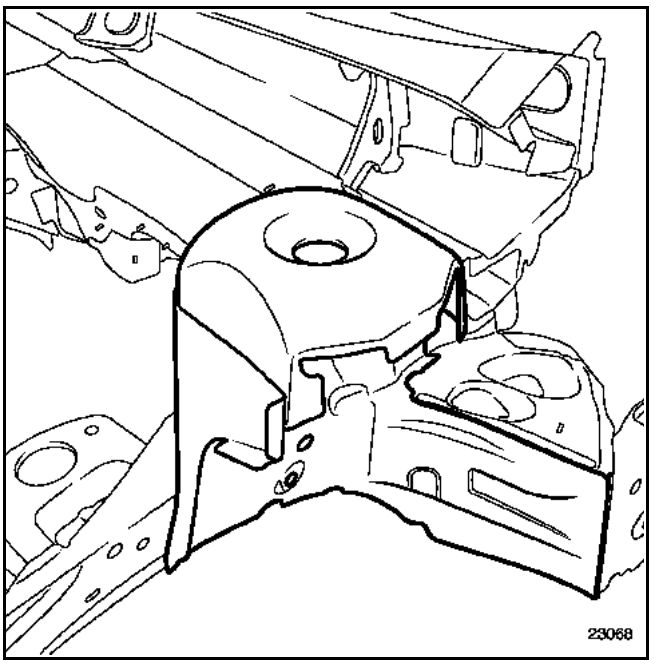

GETtheMANUALS.org

Replacement along cut (a)

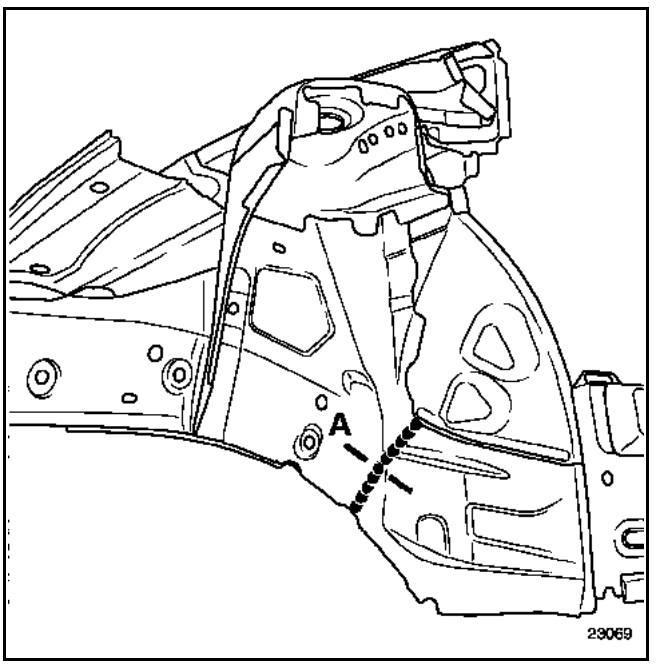

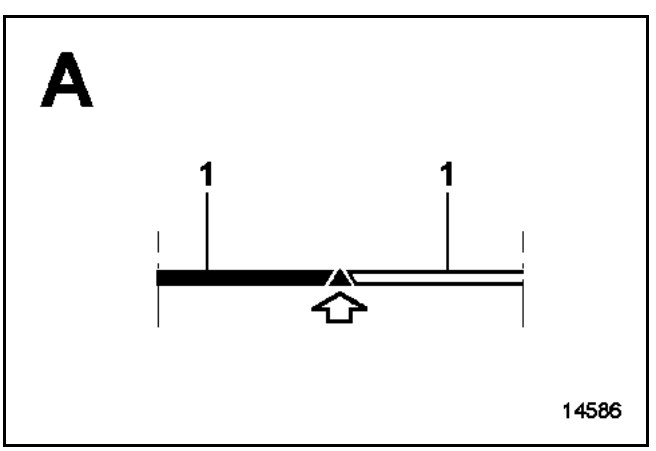

GETtheMANUALS.org

The replacement of this part is a supplementary operation to the replacement of the A-pillar after a front side collision.

It is included in case no. ② (see the introduction to **section 40A-C Description of parts**).

In the procedure described below, you will find only the descriptions and the joints which are specific to the part concerned.

The information on the additional parts will be dealt with in their corresponding sections (refer to contents).

The replacement can be carried out in two ways.
– complete,
– along cut (**a**), avoiding removal of the pedal support plate.

NOTE: only the partial removal method is described, replacing the complete part does not present any particular problems.
Where spot welds cannot be made with the spot welder, they can be replaced by plug welds.

STRUCTURE OF THE REPLACEMENT PART

Part supplied on its own.

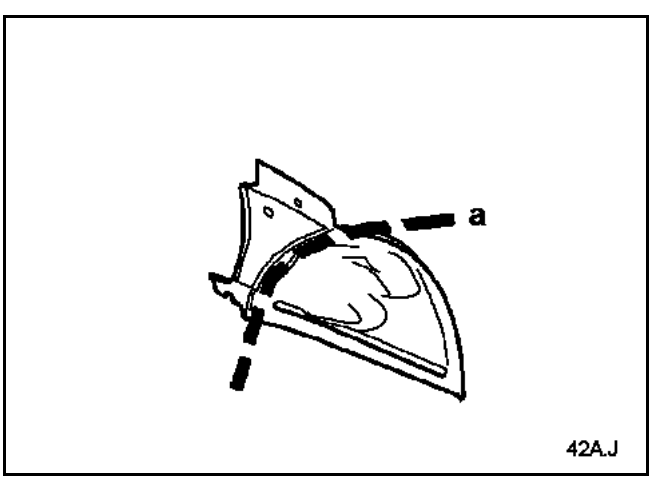

PARTS CONCERNED (thickness in mm):

1 Front wheel arch, rear section 1

GETtheMANUALS.org

Replacement along cut (a)

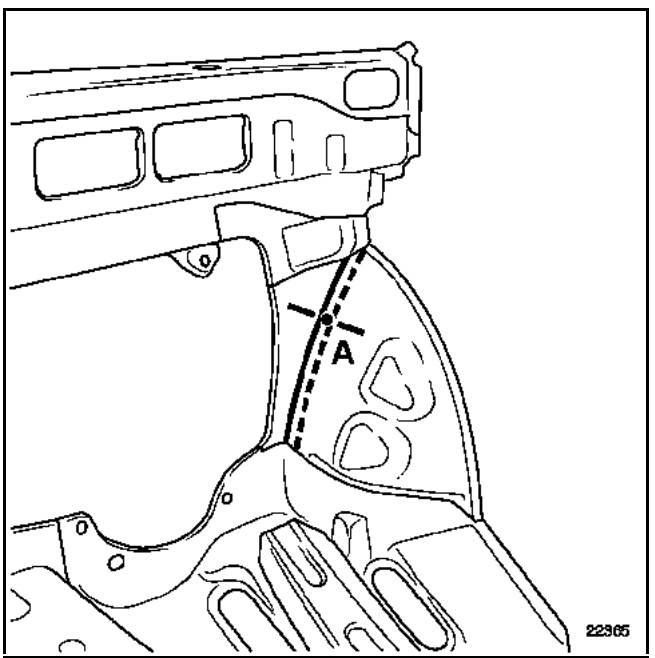

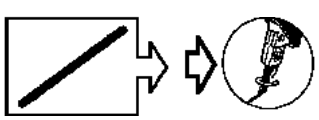 on replacement part

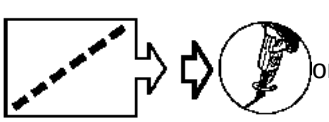 on the vehicle:

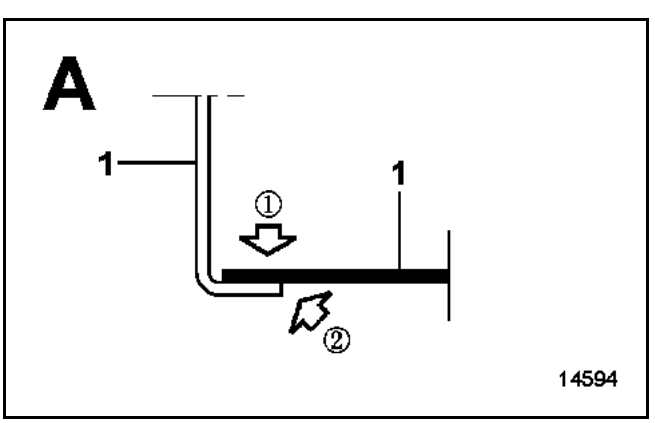

① 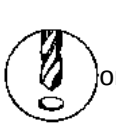 on replacement part

①

②

NOTE: the number of plug welds is not specified. It is necessary to leave a gap of approximately **60 mm** between the spot welds and then to apply a bead of mastic to the flange (operation ②) to ensure the mounting face sealing and the appearance.
Use M.J.Pro mastic (**part no.: 77 11 172 676**).

GETtheMANUALS.org

The complete replacement of this part is a supplementary operation to the replacement of the A-pillar after a side impact. Replacement along cut (a) is associated with the front wheel arch after a frontal collision.

The information on the additional parts will be dealt with in their corresponding sections (refer to contents).

The replacement can be carried out in two ways.
– complete,
– along cut (a).

NOTE: only the partial removal method is described, replacing the complete part does not present any particular problems.

You will find one or more drawings of the part either on the vehicle or removed from it in the method for your information.

Where spot welds cannot be made with the spot welder, they can be replaced by plug welds.

STRUCTURE OF THE REPLACEMENT PART

Part assembled with:
Chamber lower cross member
Wheel arch extenders
Pedal support plate bracket
Windscreen crosspiece mounting
Central acoustic stiffeners
Windscreen aperture lower cross member stiffeners
Windscreen aperture lower cross member
Windscreen aperture upper cross member
Plenum chamber
Welded studs

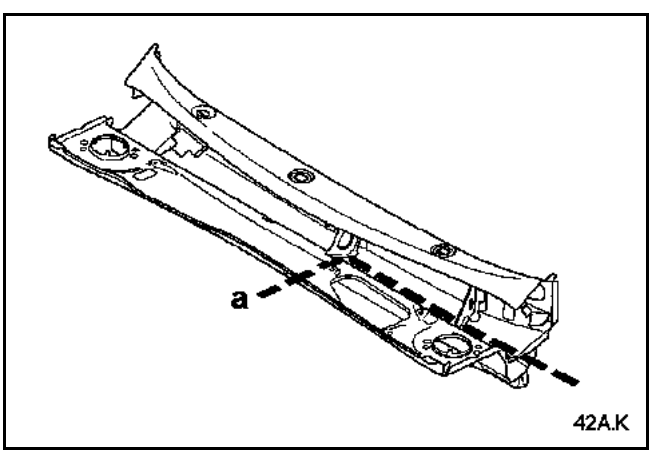

PARTS CONCERNED (thickness in mm):

1 Plenum chamber 1.5/0.8

Complete replacement

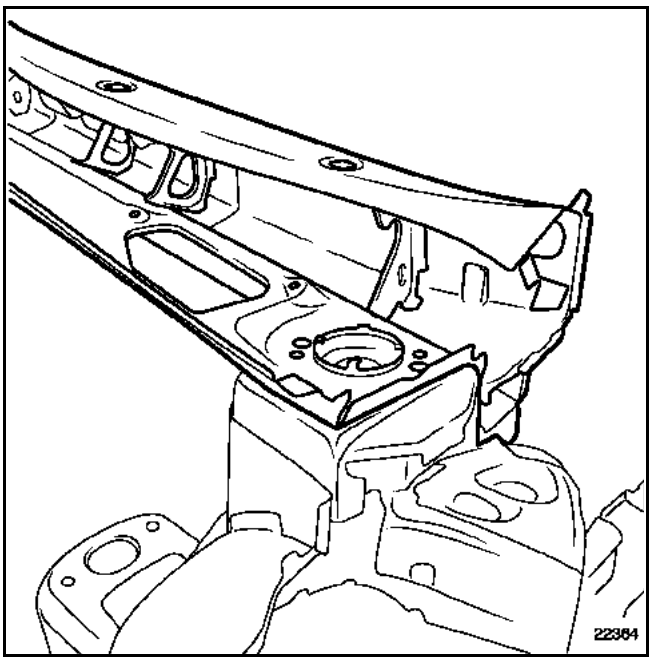

Partial replacement

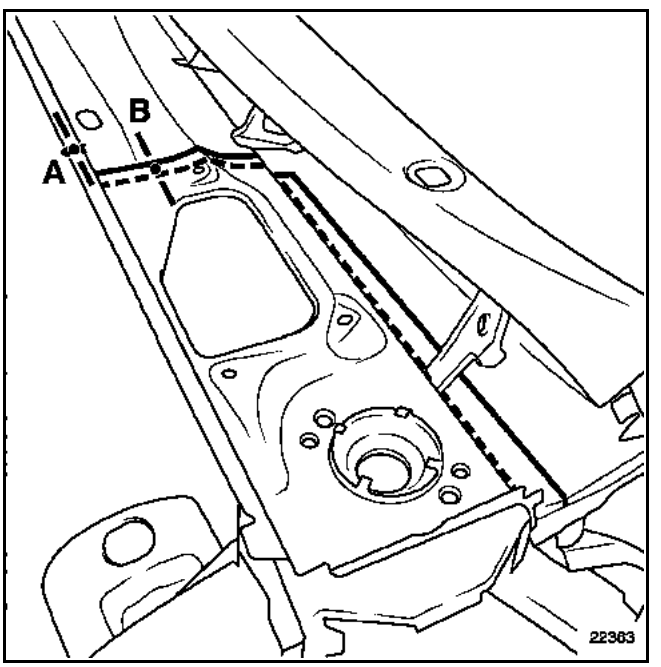

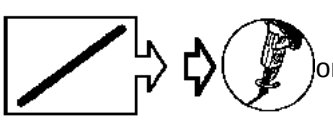
on replacement part

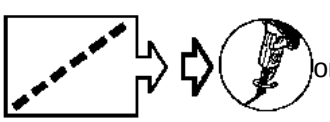
on the vehicle:

GETtheMANUALS.org

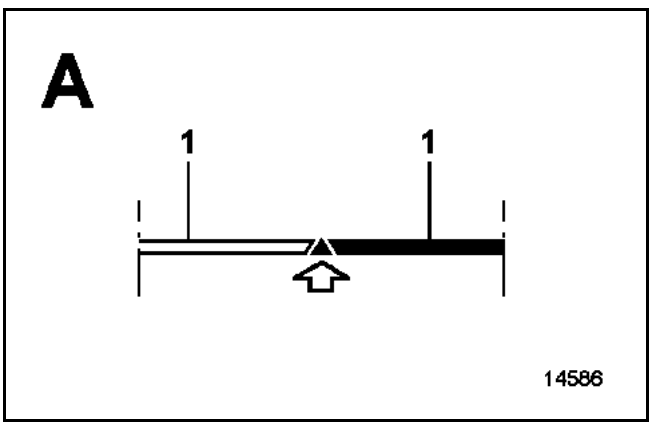

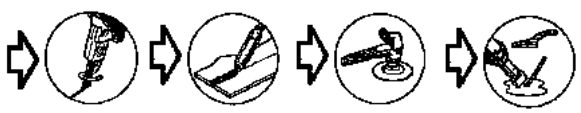

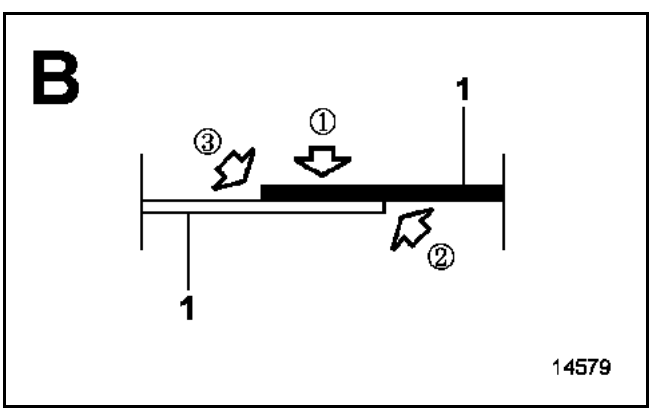

① on replacement part

①

②

③ 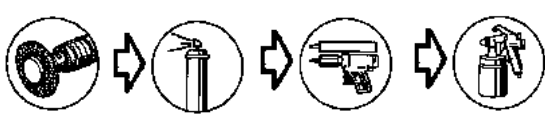

NOTE: The number of plug welds is not specified, it is necessary to leave a gap of approximately **60 mm** between the spot welds and then after welding, to apply a mastic bead to the flange (operation ②) to ensure the sealing of the connection and appearance.

Use M.J.Pro mastic (**part no.: 77 11 172 676**).

Then, in addition, perform a mastic atomisation (Mag). Pro (operation ③).

Use M.J.Pro mastic (**part no.: 77 11 172 679**).

GETtheMANUALS.org

The replacement of this part is a supplementary operation to the replacement of the A-pillar side panel after a front side impact.

The information on the additional parts will be dealt with in their corresponding sections (refer to contents).

It is a removable bodywork component.

NOTE: this part can be used as a positioning template for the A-pillar with side scuttle panel.

STRUCTURE OF THE REPLACEMENT PART

Part supplied on its own.

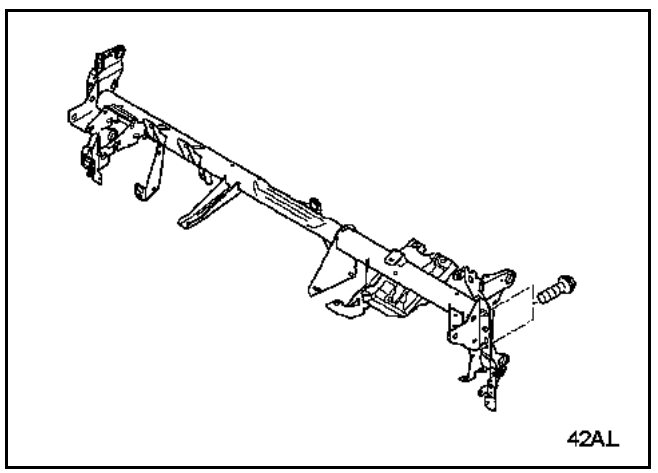

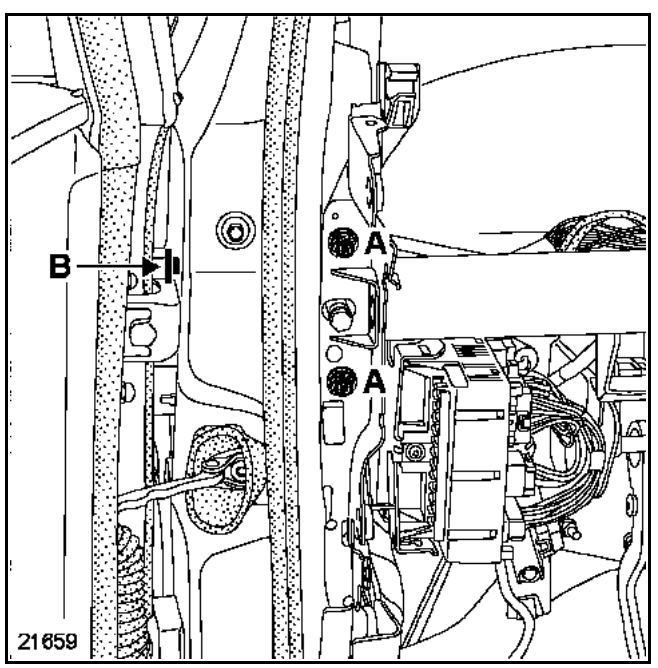

Removal/refitting is by way of the bolts (A) and (B).

NOTE:
to access the mountings, it is first necessary to remove:
– the whole instrument panel,
– the front side door, to access the mounting bolts (B).
The mounting is located only on the driver's side.

TIGHTENING TORQUES (in daNm)	
Bolt A	**2.1**
Bolt B	**0.8**

GETtheMANUALS.org

The replacement of this part is linked to the removal of the steering column mounting.

The information on the additional parts will be dealt with in the corresponding sections (refer to contents).

It is a removable bodywork component.

The removal of this part does not present any particular difficulties.

STRUCTURE OF THE REPLACEMENT PART

Part is supplied on its own.

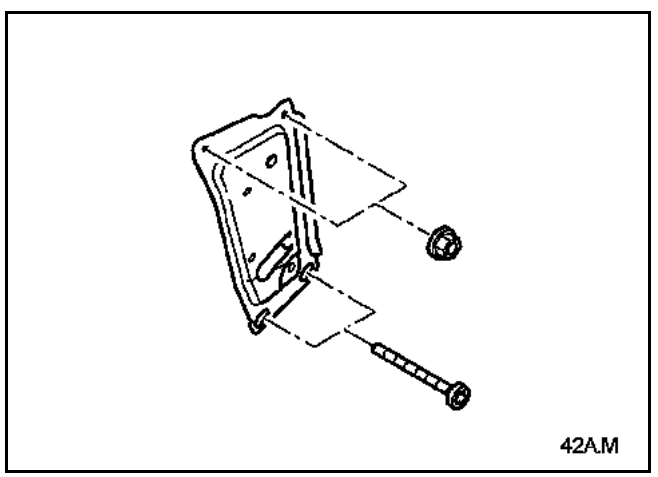

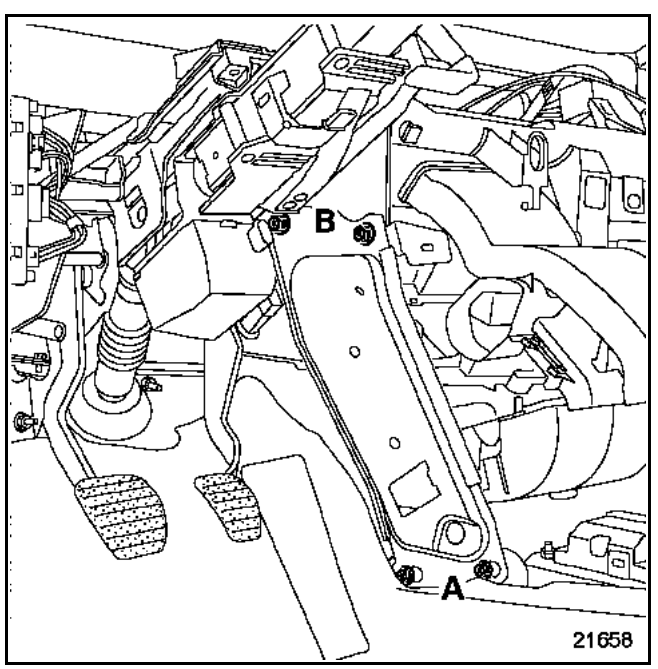

Removal/refitting is by way of two bolts (A) and two nuts (B).

NOTE: to access the mountings, the instrument panel needs to be partially removed beforehand.

GETtheMANUALS.org

The replacement of this part is a supplementary operation to the replacement of the front wheel arch rear section after a side impact.

The information on the additional parts will be dealt with in their corresponding sections (refer to contents).

NOTE: this operation presents no particular difficulties.

You will find one or more drawings of the part either on the vehicle or removed from it in the method for your information.

Where spot welds cannot be made with the spot welder, they can be replaced by plug welds.

STRUCTURE OF THE REPLACEMENT PART

Part supplied on its own.

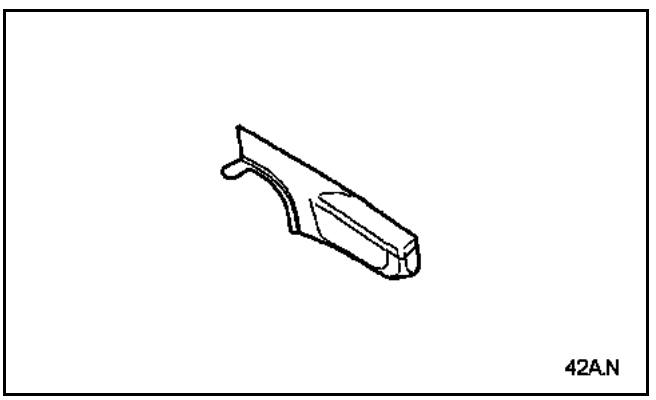

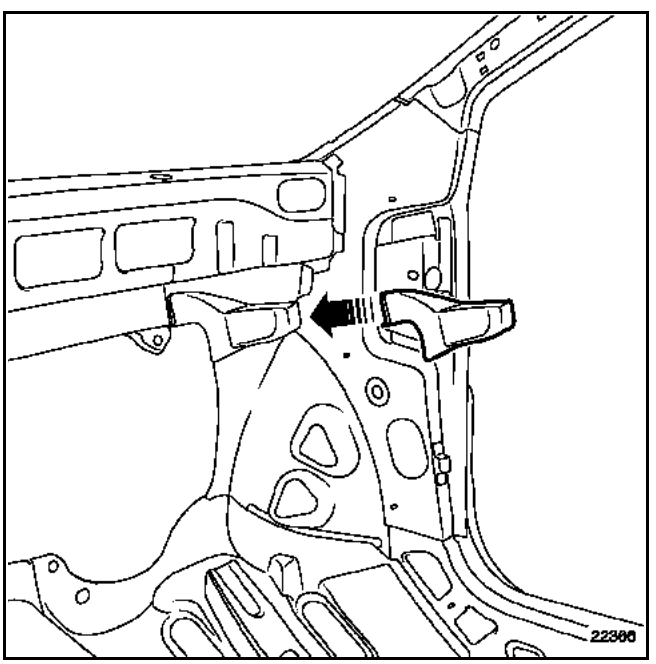

GETtheMANUALS.org

The removal/refitting of this part is an operation linked to the replacement of the complete body structure. It is included in case no. ② (see the introduction to **section 40A-C Description of parts**).

The information on the additional parts will be dealt with in the corresponding sections (refer to contents).

It is a structural component which is bonded and bolted.

STRUCTURE OF THE REPLACEMENT PART

Part supplied on its own.

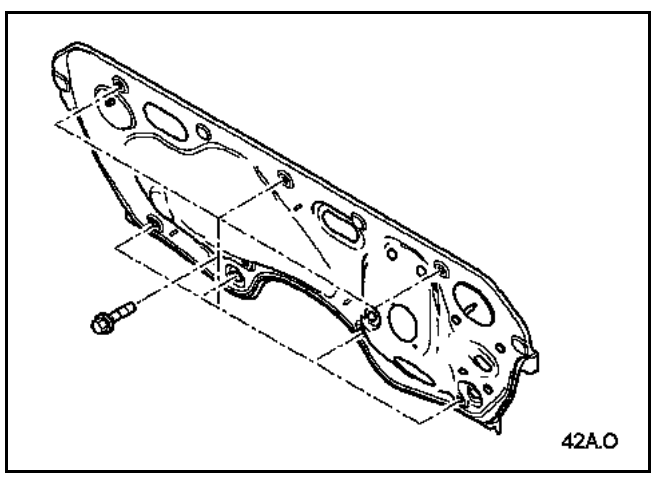

REMOVAL

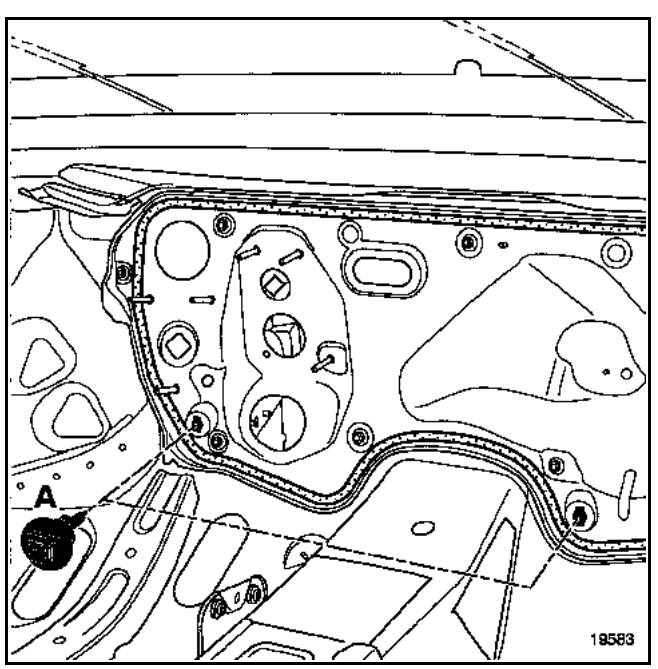

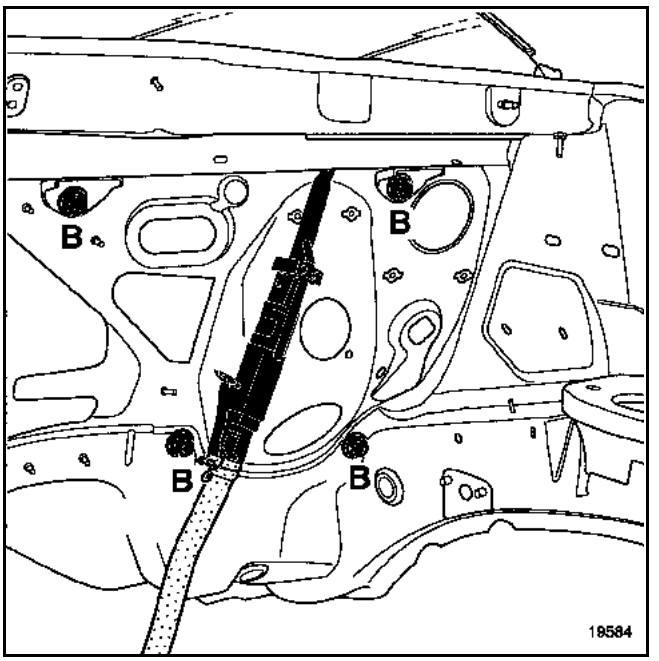

Remove:
– the two indexing clips (A),
– the mounting bolt (B).

Cut through the cement bead with the pneumatic tool (refer to **Technical Note 414A**).

NOTE: Cutting the bond can be difficult due to the shape of the surrounding components.

REFITTING

To refit, the bonding method is the same as replacing the windscreen (refer to **Technical Note 371A**).

Refit:
– the mounting bolts (A),
– the two indexing clips (B).

GETtheMANUALS.org

The replacement of this part is a basic operation for a side impact.

In the procedure described below, you will find only the descriptions and the joints which are specific to the part concerned.

The information on the additional parts will be dealt with in their corresponding sections (refer to contents).

To perform this operation, the following must also be ordered:
– the two scuttle side panel upper reinforcements (5 and 6),
– the lower expanding insert,
– the A-pillar reinforcement (only for cuts b-c).

Replacement can be made following two methods:
– along cuts (a and c),
– along cuts (a and b) or (b and c), cut (b and b') is made offset under the upper door hinge.

IMPORTANT: the positions of the cuts given in the methods cannot be offset, they are determined according to the positions of the linings and reinforcements, except for cut (c) which can be offset along the deformation caused by impact.

COMPOSITION OF THE REPLACEMENT PART

Part assembled with:
Pillar upper reinforcement
Welded studs
Welded pins.
Welded bolts
Crimped nuts
Pillar reinforcement
Hinge reinforcements
Hinge mounting plate
Hinge mounting cage
Door stop reinforcement

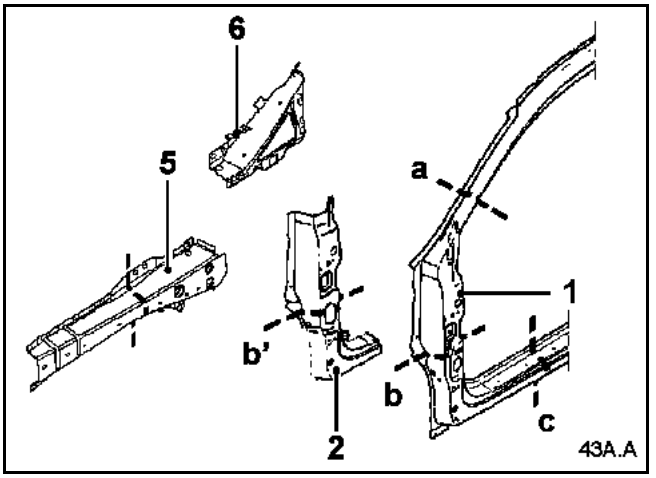

PARTS CONCERNED (thickness in mm):

1	A-pillar	0.8
2	Pillar reinforcement	1
3	Windscreen aperture pillar lining reinforcement	1.2
4	Lower hinge reinforcement	1.5
5	Scuttle side panel upper reinforcement	1.2
6	Scuttle side panel upper rear reinforcement	1

GETtheMANUALS.org

Replacement using cuts (a and c)

IMPORTANT: this part is within an area of bodywork that sustains a considerable amount of stress.
The spot welds not indicated in the method can all be made as originally.
However, for reasons of safety, it is advisable to make additional plug welds in area (C) to maintain the mechanical properties of the structure.

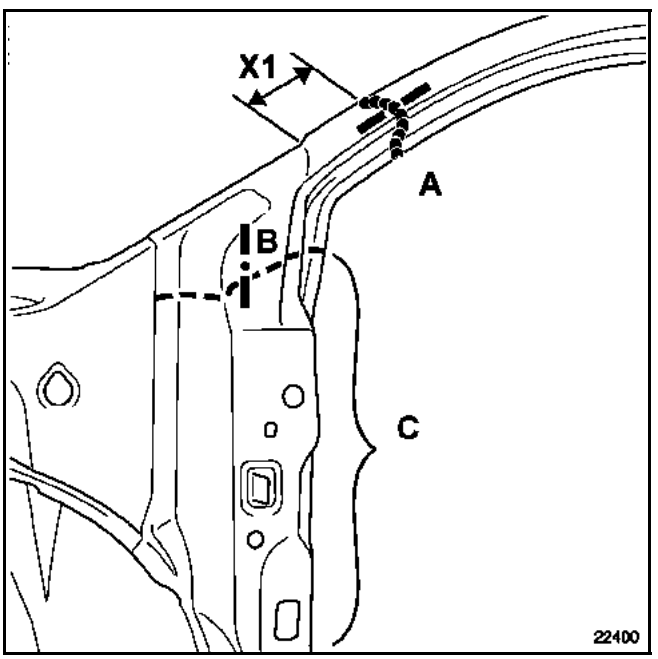

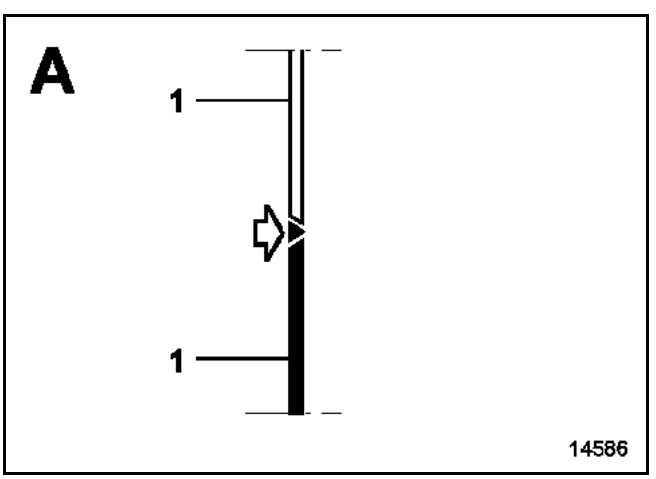

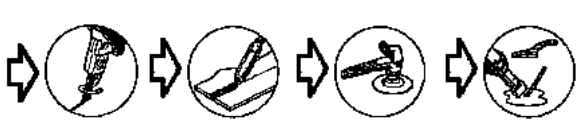

X1: **200 mm**

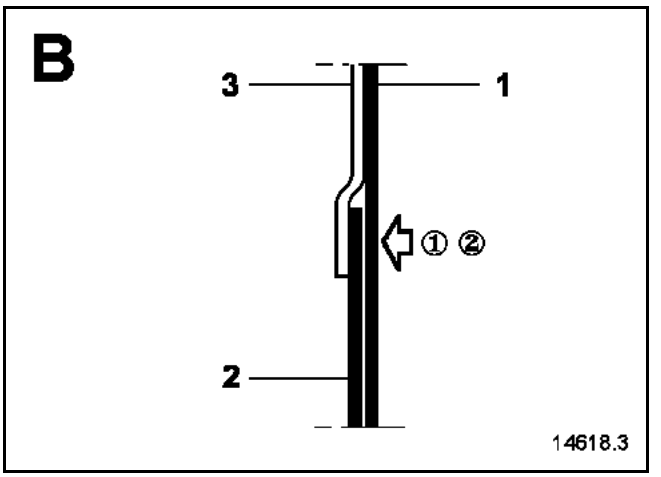

① X6 on the vehicle

② X6 on the replacement part

IMPORTANT: in operation ① pillar reinforcement (2) is welded to A-pillar lining (3), to remove the pillar, the two thicknesses of panels (1 and 2) must be unfastened.

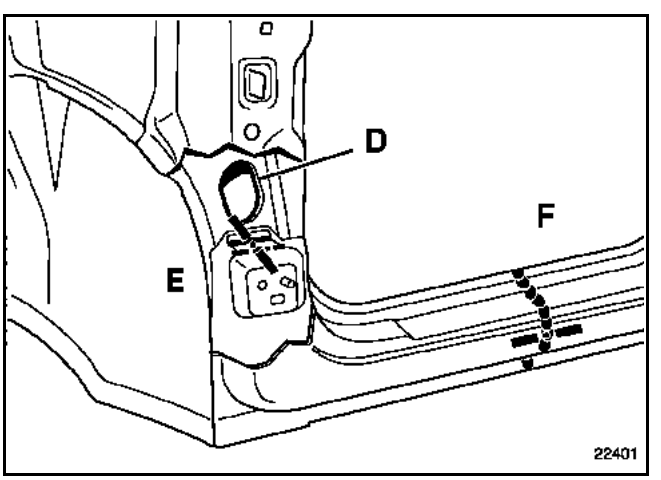

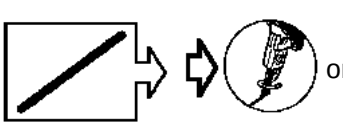 on the replacement part

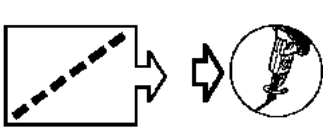 on the vehicle

GETtheMANUALS.org

IMPORTANT: hinge reinforcement (4) assembled with pillar reinforcement (3) is welded at the lower section to the sill panel, the cutting operation depicted in the diagram can be carried out through opening (D) from inside the vehicle.

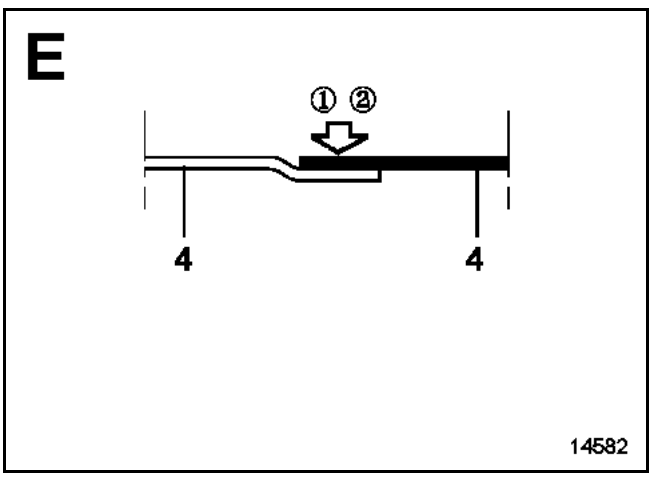

① X2 on the replacement part

②

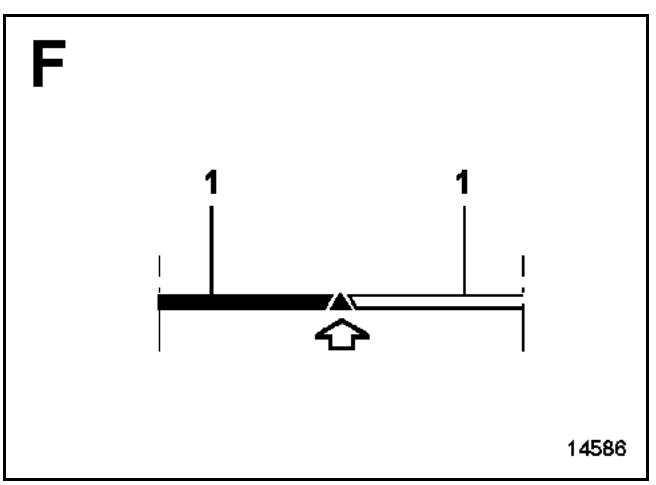

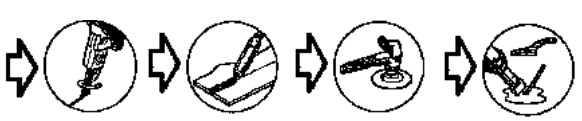

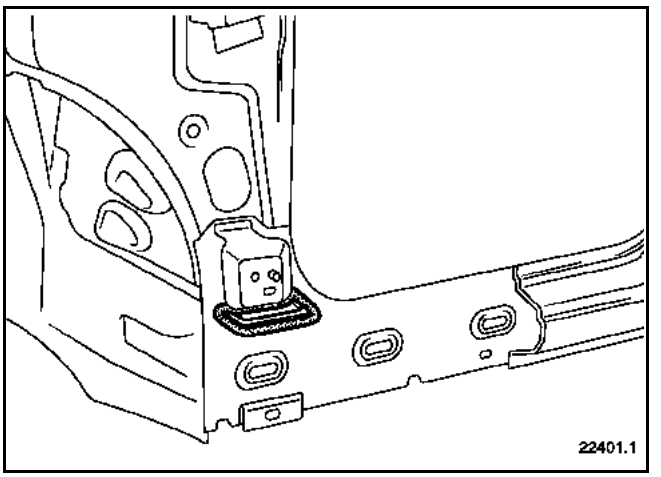

REMINDER: the expanding inserts ensure that the vehicle cavities are sealed and soundproofed.

These react to temperature when the body is immersed in the cataphoresis baths during manufacture.

These conditions cannot be reproduced in the workshop.

Because the inserts are not reusable they must always be replaced.
The inserts supplied by the Parts Department are identical to the original parts.

In order to reproduce the soundproofing and sealing properties the following range of operations must be performed:

1 Clean the bonding surfaces with heptane (**part no.: 77 11 170 064**).
2 Seal the holes in the insert if necessary, by cutting out a piece of soundproofing pad **(part no.: 77 01 423 546**)
3 Apply lining sealing mastic (**part no.: 77 01 423 330**) to the periphery of the insert.
4 Fit the insert by compressing the mastic.

IMPORTANT: when MIG welding, protect the inserts from melting metal spatter and heat dispersion.
Use a thermal protection paste, for example (**part no.: 77 11 172 826**).

GETtheMANUALS.org

Replacement using cuts b and c

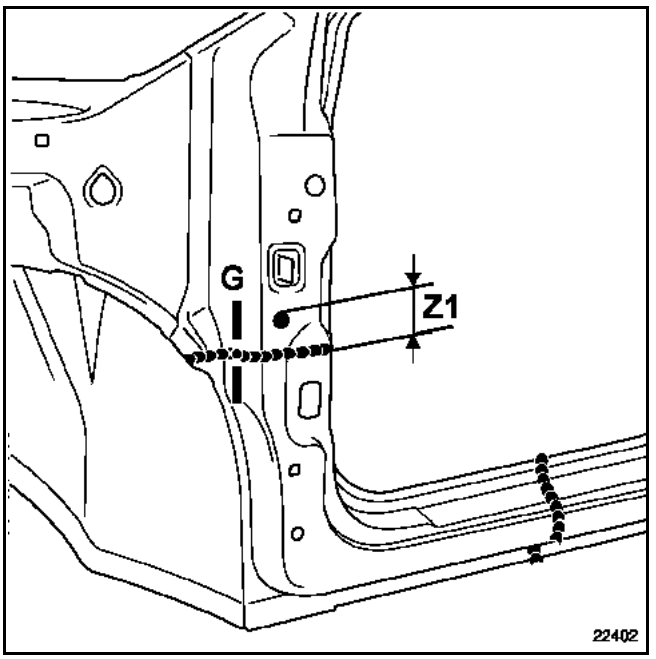

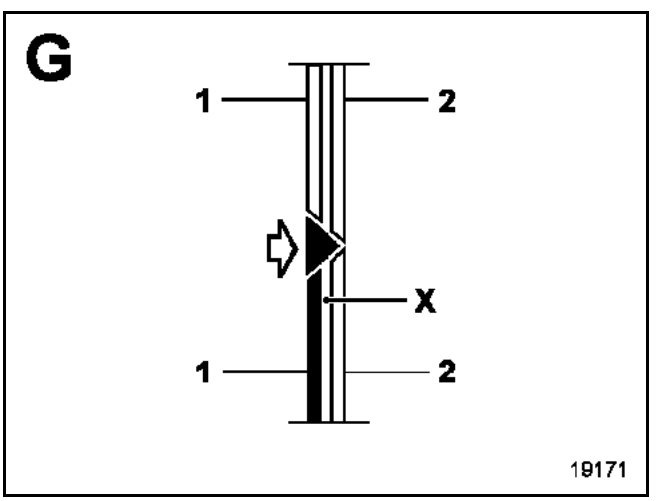

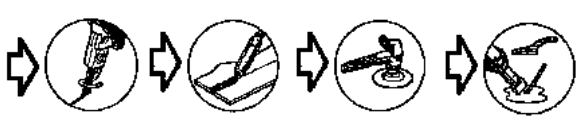

NOTE:
Z1: 40 mm
Area **X** is empty.

The cut at the sill panel is not detailed, it is identical to the partial replacement described previously.

IMPORTANT:
When performing the cutting operation take care **not to damage pillar reinforcement 2.**

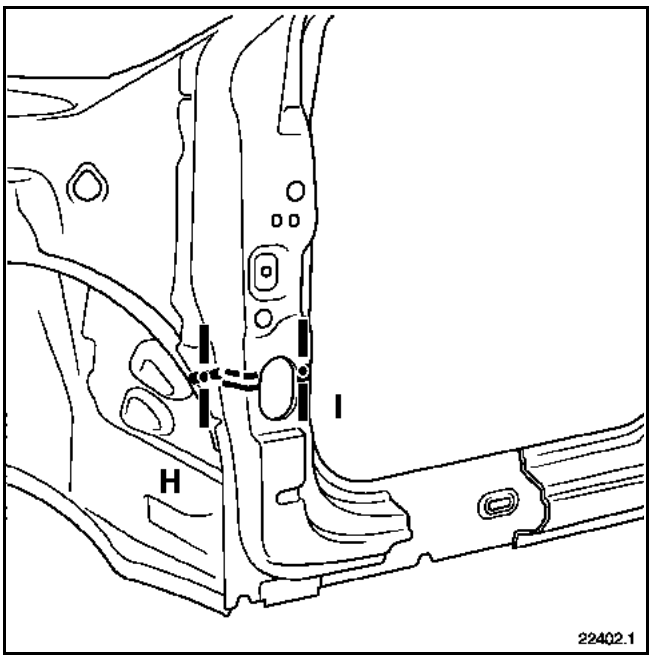

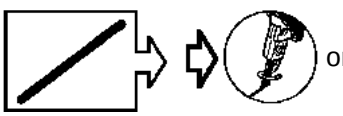

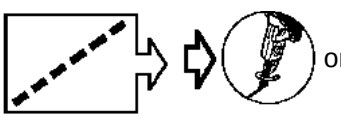

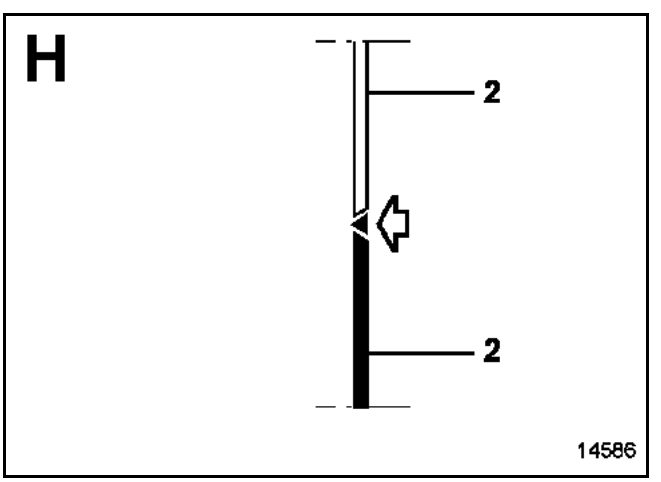

GETtheMANUALS.org

NOTE:
For every offset cut, it is essential to:
– detach the pillar reinforcement on the replacement part,
– detach the pillar reinforcement on the vehicle,
– also order a new retail reinforcement.

IMPORTANT: it is advisable not to re-use the reinforcement once removed.

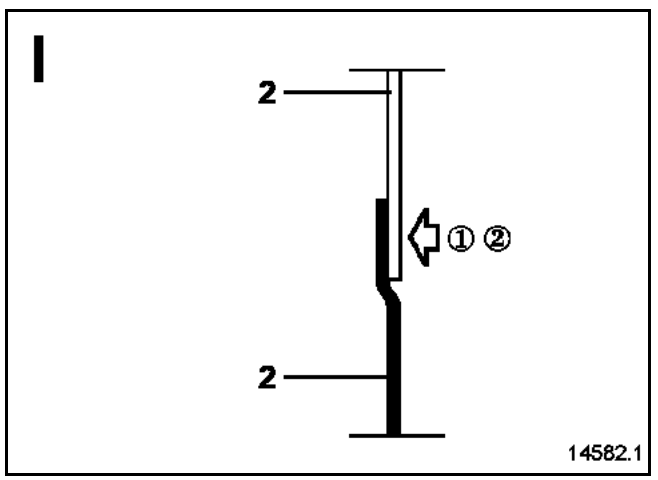

① on the replacement part

②

NOTE: the number of plug welds is not specified, a gap of approximately **40 mm** must be left between spot welds.

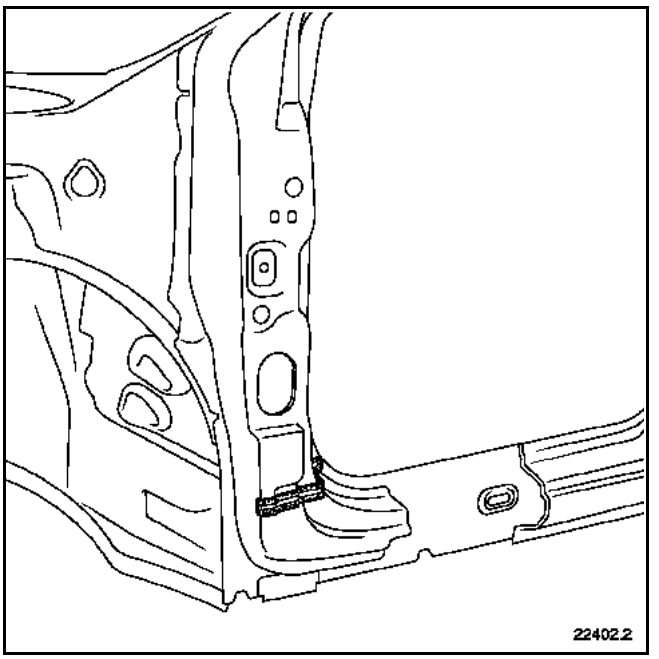

REMINDER: it is essential to replace the expanding insert (see method previously outlined).

GETtheMANUALS.org

The replacement of this part is an operation linked to the replacement of the A-pillar along cuts (b and c) for a side impact.

It is carried out following cut (b') only.

For more detail, refer to the method of partially replacing the A-pillar.

NOTE: the complete replacement of this part is not dealt with, it is preferable to replace the A-pillar assembled with the reinforcement.

COMPOSITION OF THE REPLACEMENT PART

Part assembled with:
Pillar upper reinforcement
Welded studs
Crimped nuts
Hinge reinforcements
Hinge mounting plate
Hinge mounting cage
Door stop reinforcement

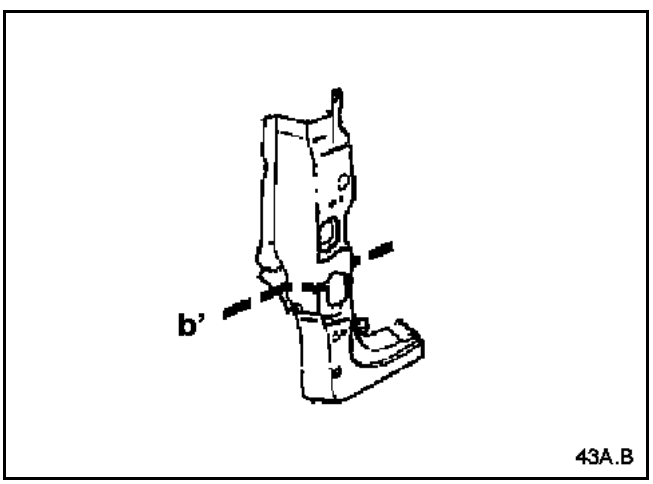

GETtheMANUALS.org

This part is replaced in the event of a side impact, and is carried out in several possible ways:
– complete, complementary to replacement of the body top,
– using cut (a) complementary to replacing the A-pillar.

The information on the additional parts will be dealt with in their corresponding sections (refer to contents).

NOTE: for information purposes, there are one or more diagrams of the part fitted to the vehicle or removed.

Where spot welds cannot be made with the spot welder, they can be replaced by plug welds.

Partial detachment of this part may be useful when straightening the A-pillar lining.

COMPOSITION OF THE REPLACEMENT PART

Part supplied on its own.

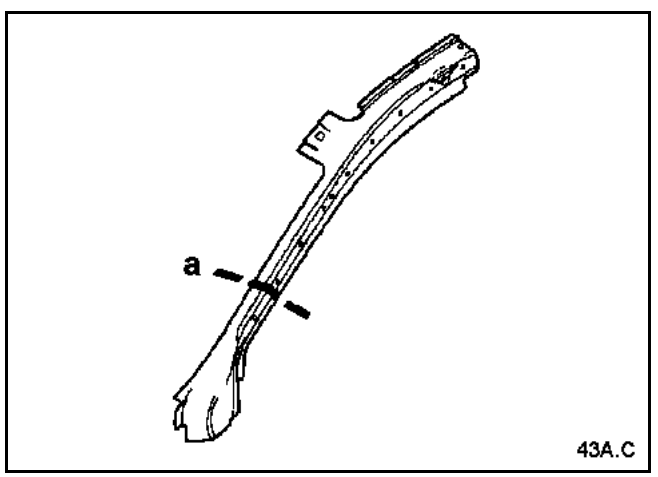

PARTS CONCERNED (thickness in mm):

1	Windscreen aperture pillar lining reinforcement	1.2
2	A-pillar reinforcement	1

Complete replacement

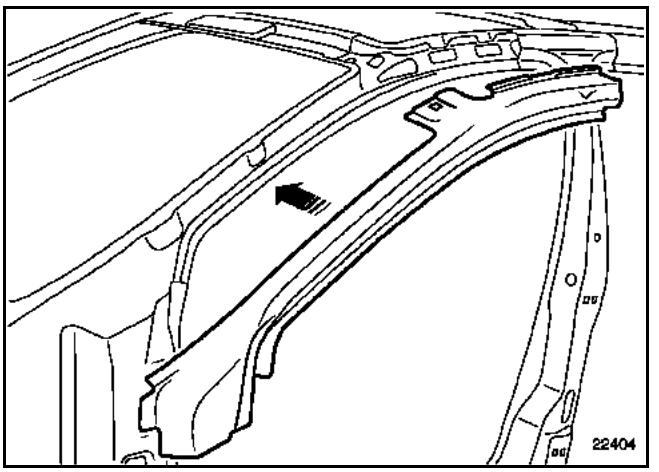

GETtheMANUALS.org

Replacement using cut a

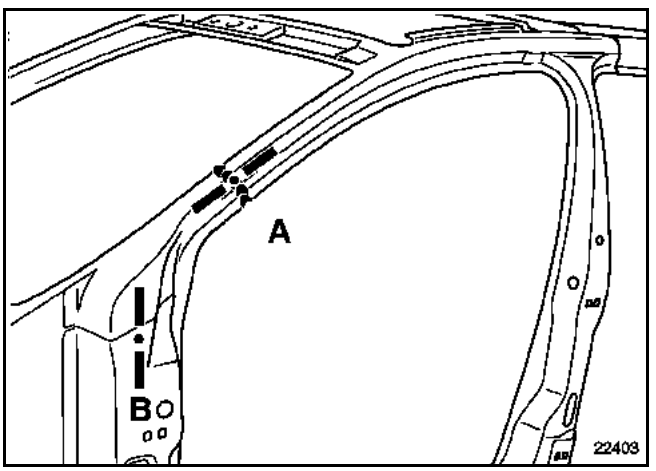

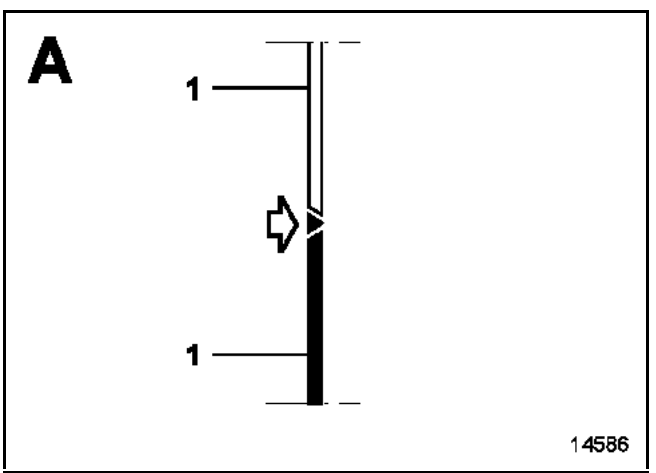

REMINDER: the position of the cut can vary according to the section to be replaced, this should not be carried out across a slot.

IMPORTANT: the cuts must be offset when partially replacing the A-pillar.

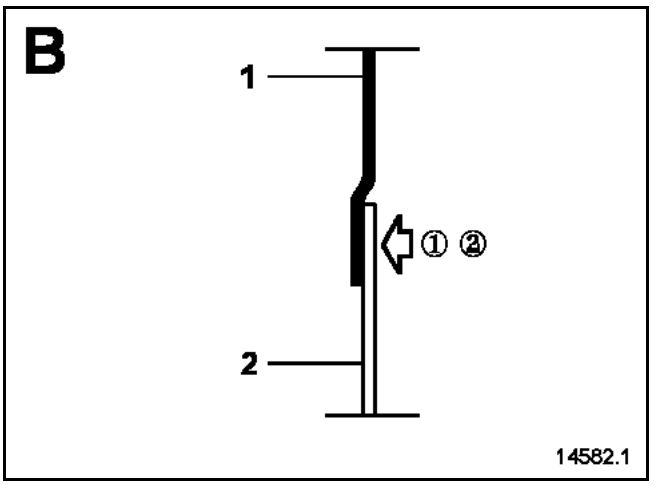

① 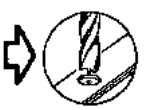 X6 on the vehicle

② X6 on the replacement part

GETtheMANUALS.org

The replacement of this part is a complementary operation to the complete replacement of the A-pillar lining reinforcement for a side impact.

It is part of the process of method no. ② (see the introduction to **section 40A-C: Description of parts**).

In the procedure described below, you will only find the descriptions and the joints which are specific to the part concerned.

The information on the additional parts will be dealt with in their corresponding sections (refer to contents).

This operation can also be carried out partially in addition to replacing an A or B-pillar along cut (a) (keep the front or rear part depending on the case).

IMPORTANT:
The A-pillar lining consists of two panels of different thickness which are butt-welded together.
Cut (a) is made **20 mm** in front of the butt weld line.

COMPOSITION OF THE REPLACEMENT PART

Part assembled with seat belt mounting nut.

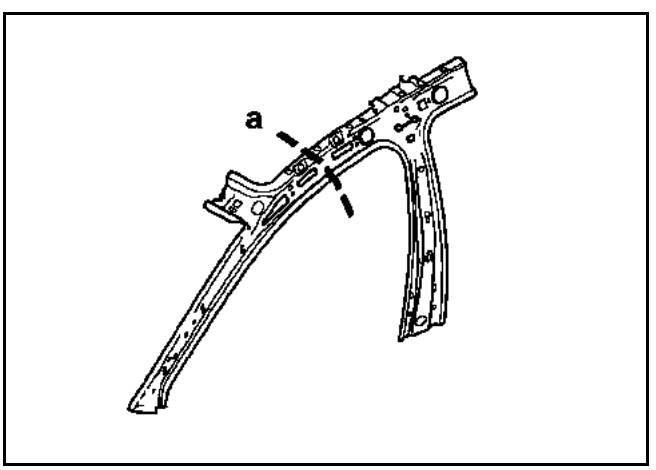

PARTS CONCERNED (thickness in mm):

1	Windscreen aperture pillar lining	1.2/1.5
2	Scuttle side panel	1

Replacement using cut a

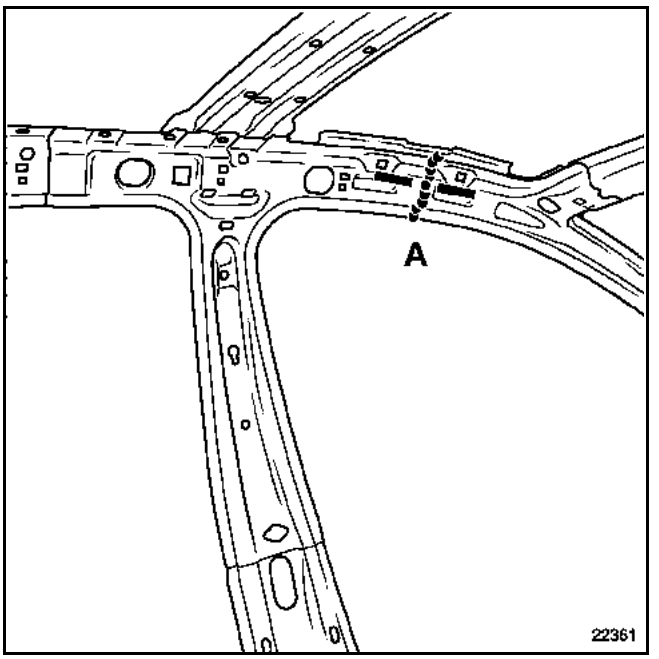

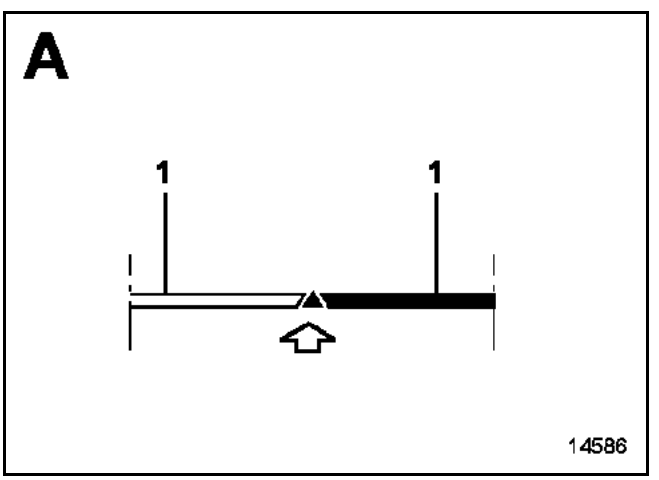

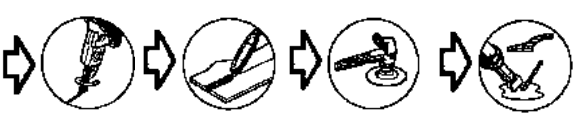

GETtheMANUALS.org

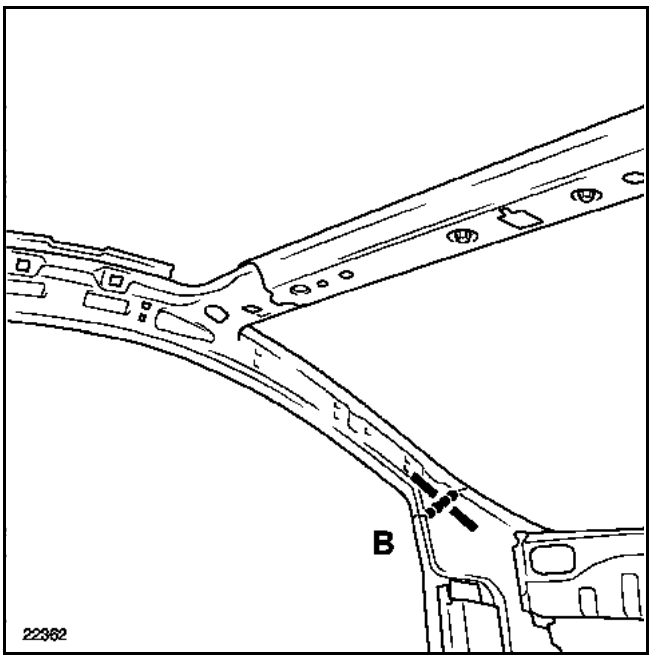

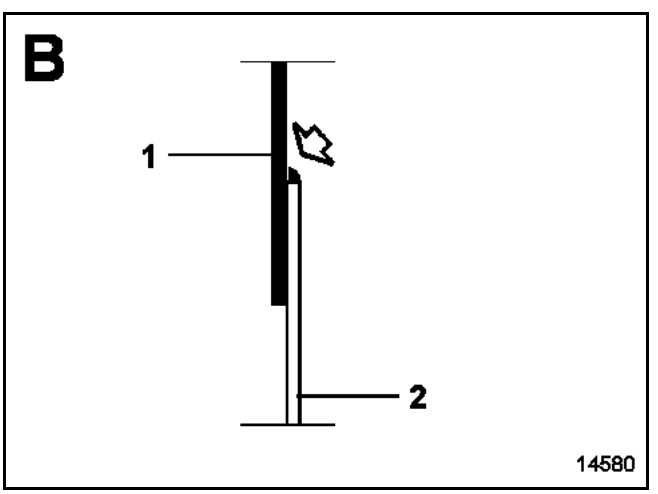

L 60 mm

GETtheMANUALS.org

The replacement of this part is a basic operation for a side impact.
It is part of the process of method no. ② (see the introduction to **section 40A-C: Description of parts**).

In the procedure described below, you will find only the descriptions and the joints which are specific to the part concerned.
The information on the additional parts will be dealt with in their corresponding sections (refer to contents).

To perform this operation, the following must also be ordered:
– the lower expanding insert.

Replacement is made using cuts (**a, b, and c**).

NOTE: for reasons of Parts Department standardization, the B-pillar is to be cut body side at the front section. The latter covers several types of sales.

COMPOSITION OF THE REPLACEMENT PART

Part assembled:
A-pillar upper reinforcement
Welded studs
Welded pins
Welded bolts
Crimped nuts
A-pillar reinforcement
Hinge reinforcements
Hinge mounting plate
Hinge mounting cage
Door stop reinforcement

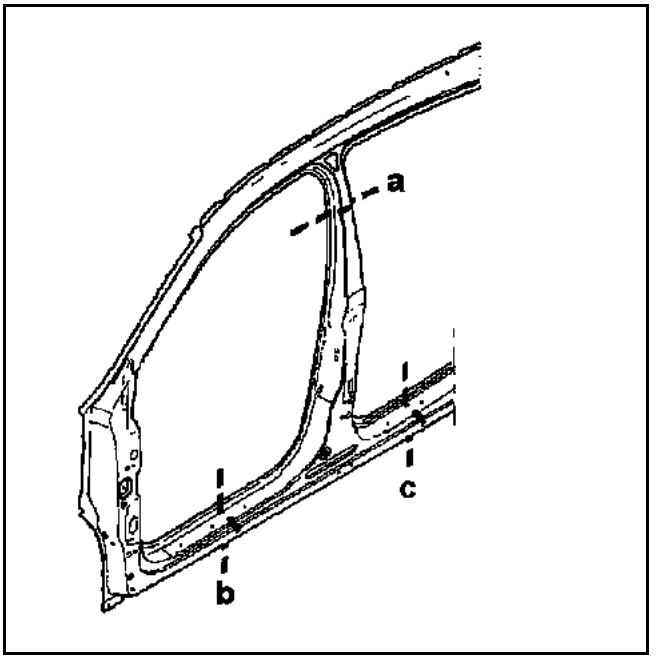

PARTS CONCERNED (thickness in mm):

1	B-pillar	0.9
2	B-pillar reinforcement.	1.8

Replacement using cuts (a, b, c)

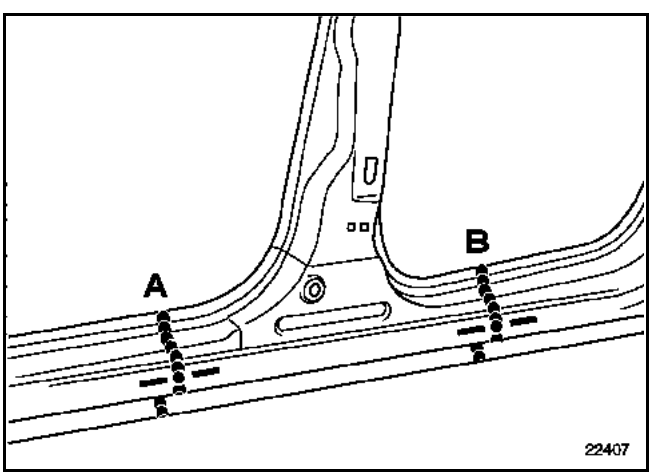

GETtheMANUALS.org

A

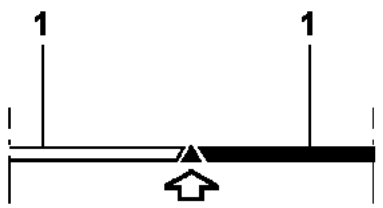

14586

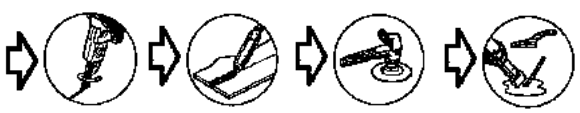

B

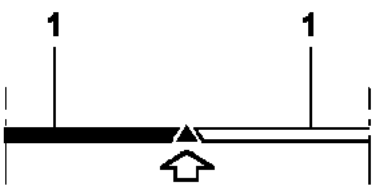

14586

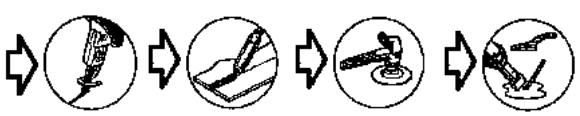

IMPORTANT: cut (c) should be made between the two location holes for the door sill lining mounting clips, to ensure that the replacement part covers it.

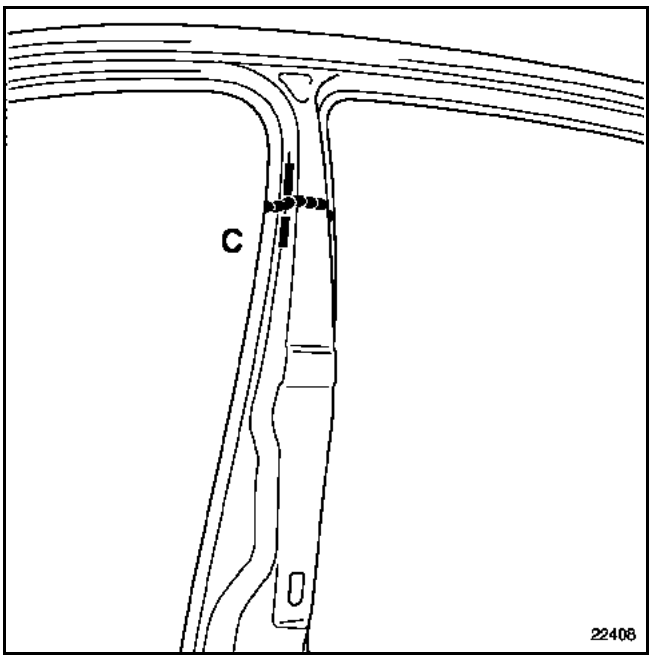

22408

C

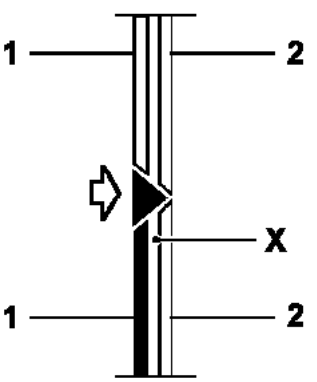

19171

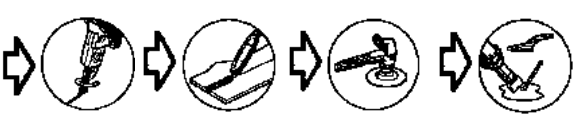

NOTE: area **X** is empty.

REMINDER: the position of the cuts can vary according to the section to be replaced, this should not be carried out across a slot.

GETtheMANUALS.org

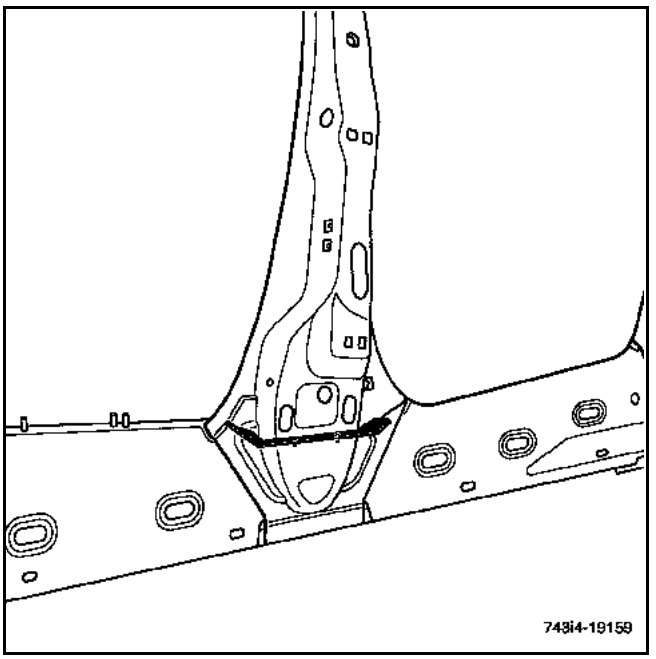

REMINDER: it is essential to replace the expanding insert (see method described in **section 43A-A**).

GETtheMANUALS.org

The complete replacement of this part is an operation complementary to the replacement of the body top and requires the removal of the A-pillar lining reinforcement for a front side impact or the removal of the roof drip moulding stiffener for a rear side impact.

It is part of the process of method no. ③ (see the introduction to **section 40A-C: Description of parts**).

In the procedure described below, you will only find the descriptions and the joints which are specific to the part concerned.

The information on the additional parts will be dealt with in their corresponding sections (refer to contents).

To perform this operation, the lower expanding insert must also be ordered.

Replacement can be made following two methods:
– complete,
– using cut (a') in addition to B-pillar cuts (a, b and c).

COMPOSITION OF THE REPLACEMENT PART

Part assembled with:
Hinge reinforcement
Satellite mounting piece
Plate
Nut

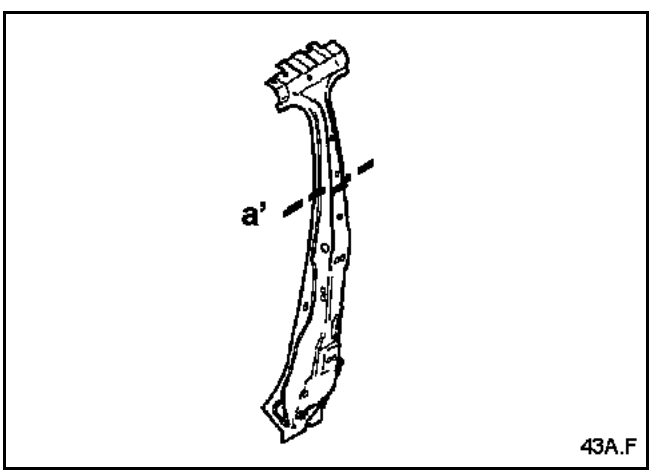

PARTS CONCERNED (thickness in mm):

1	B-pillar reinforcement.	1.8
2	Hinge reinforcement	1.5
3	Inner sill panel	1
4	Windscreen aperture pillar lining reinforcement	1.2
5	Roof panel lining	1

Complete replacement

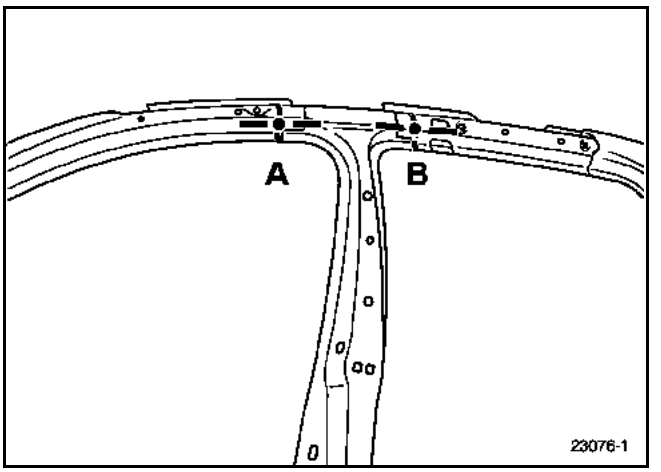

NOTE: the B-pillar reinforcement passes under the A-pillar and the roof drip moulding stiffener, which requires the removal of A-pillar lining reinforcement (5) or roof drip moulding stiffener (4).

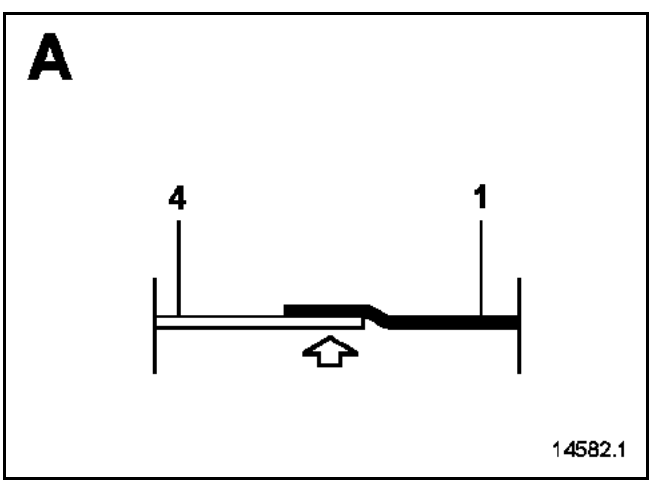

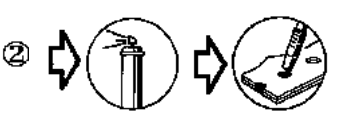

GETtheMANUALS.org

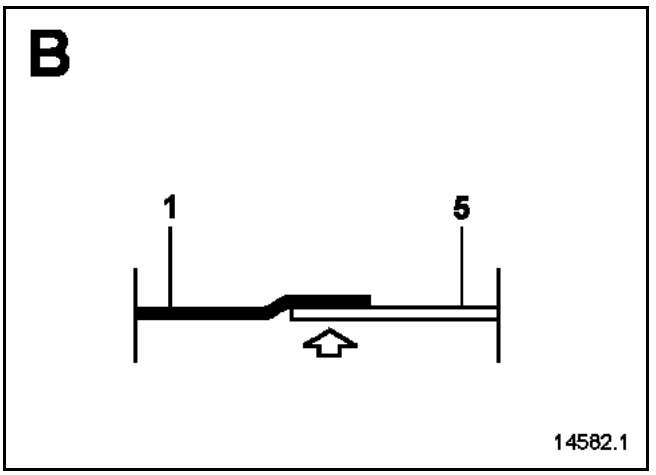

① on the vehicle

② X4

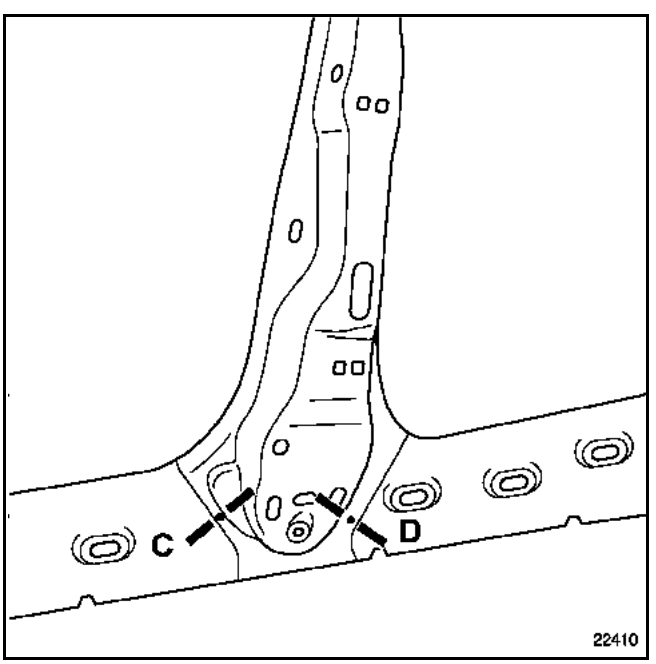

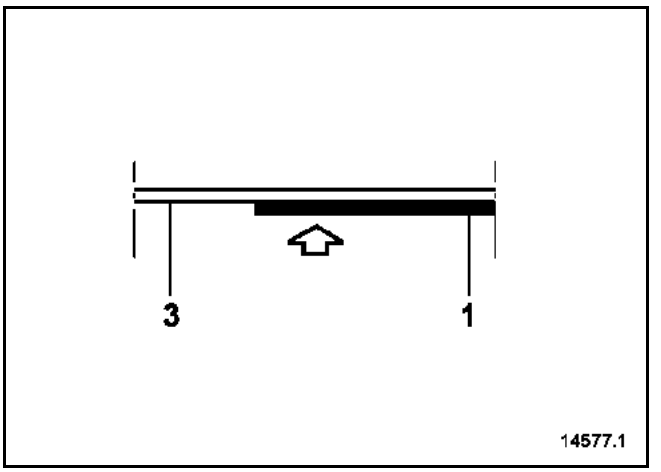

X2

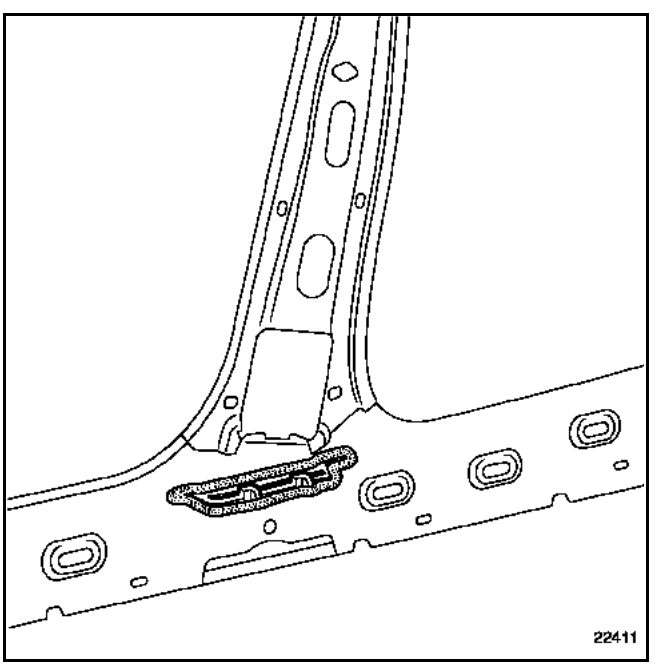

REMINDER: it is essential to replace the expanding insert (see method described in **section 43A-A**).

GETtheMANUALS.org

Replacement using cut (a')

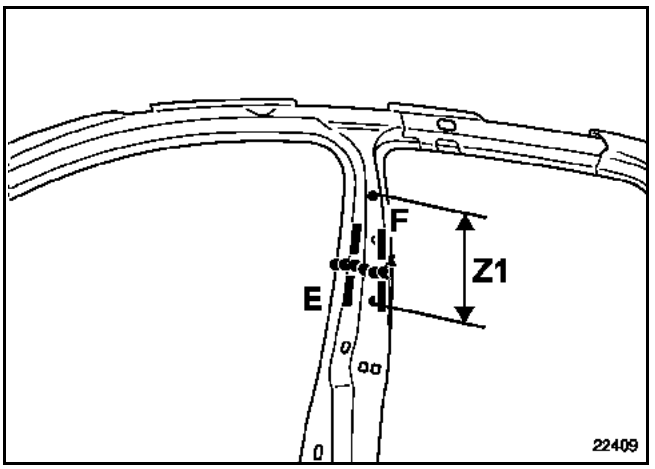

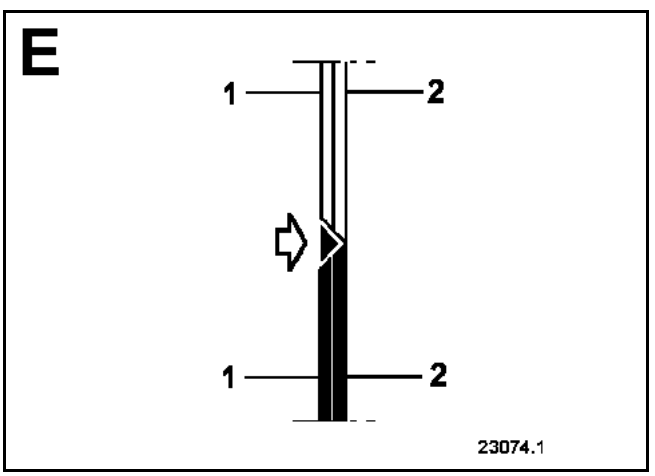

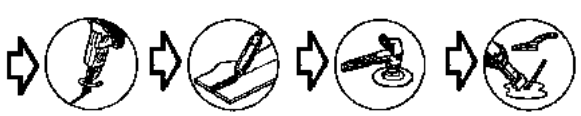

NOTE: the position of cut (a') can vary in area **Z1** according to the part to be replaced, this must not be made across a slot.

IMPORTANT: the cuts must be offset in the case of a partial replacement of the B-pillar.

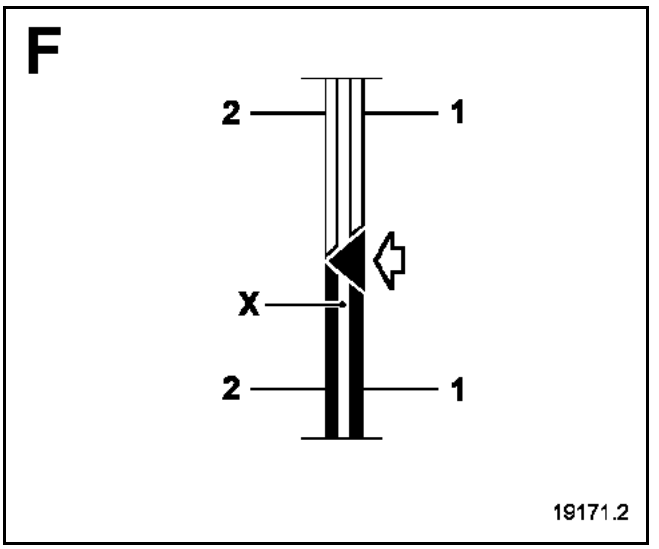

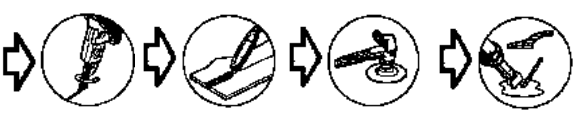

NOTE: area **X** is empty.

GETtheMANUALS.org

The replacement of this part is a complementary operation to the replacement of the B-pillar reinforcement for a side impact.

It is part of the process of method no. ② (see the introduction to **section 40A-C: Description of parts**).

In the procedure described below, you will only find the descriptions and the joints which are specific to the part concerned.

The information on the additional parts will be dealt with in their corresponding sections (refer to contents).

NOTE: this operation raises no particular difficulties.

For information purposes, there are one or more diagrams of the part fitted to the vehicle or removed.

Where spot welds cannot be made with the spot welder, they can be replaced by plug welds.

COMPOSITION OF THE REPLACEMENT PART

Part supplied on its own.

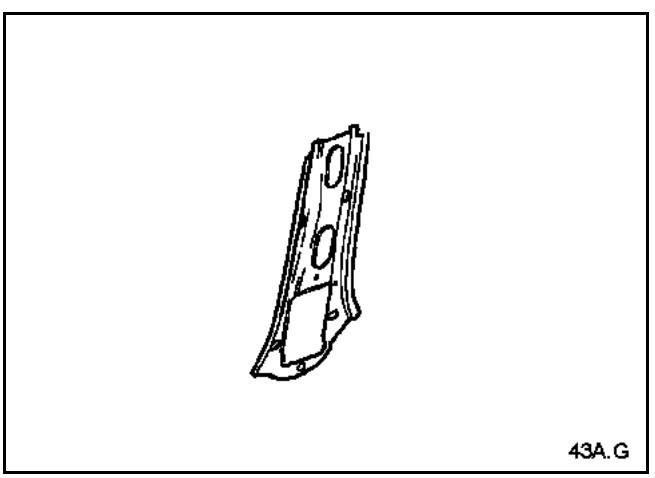

PARTS CONCERNED (thickness in mm):

1	B-pillar lining	0.7
2	Inner sill panel	1
3	Sill panel reinforcement	1.5

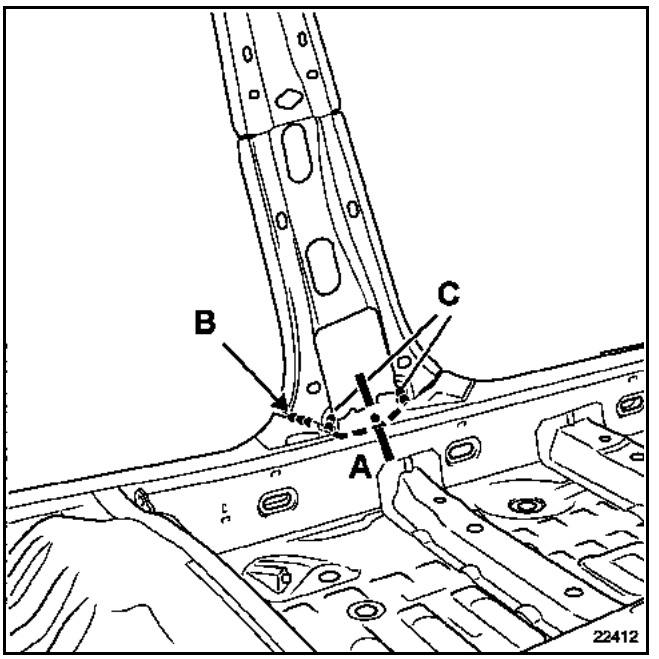

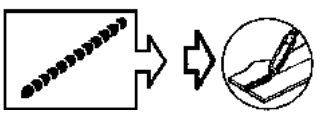

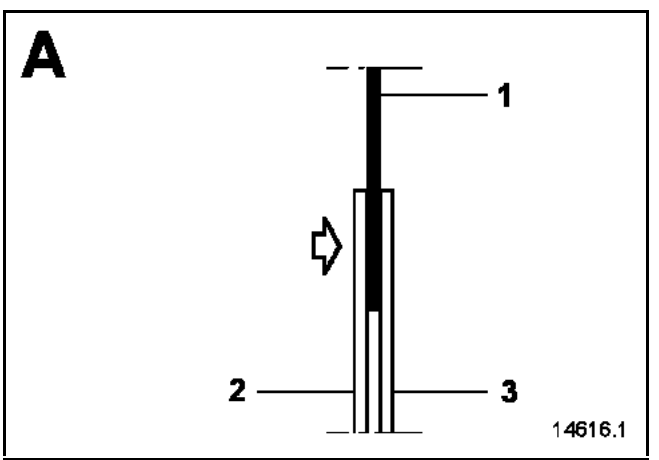

NOTE:
The two plug welds **A** are specific to the repair.

It is advisable to create a weld bead **B** in addition to the two original ones **C**.

GETtheMANUALS.org

The replacement of this part is a complementary operation to the roof for a side impact.

In the procedure described below, you will only find the descriptions and the joints which are specific to the part concerned.

The information on the additional parts will be dealt with in their corresponding sections (refer to contents).

To perform this operation, the upper front expanding insert must also be ordered.

Replacement can be made following two methods:
– using cuts (a, b and c) or (a', b and c).

NOTE: where welds cannot be made by the spot welder, they can be replaced by plug welds.
The positions of the cuts given in the method can be modified according to the extent of impact.

COMPOSITION OF THE REPLACEMENT PART

Part assembled with:
Welded pin
Welded stud

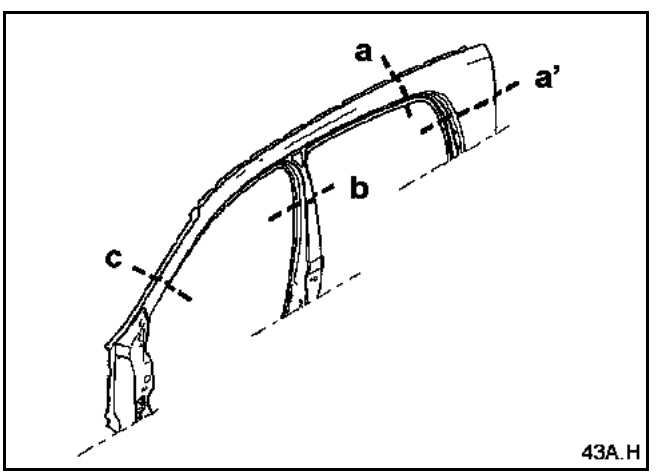

PARTS CONCERNED (thickness in mm):

1	Body top	0.8

Replacement using cuts (a, b and c) or (a', b and c)

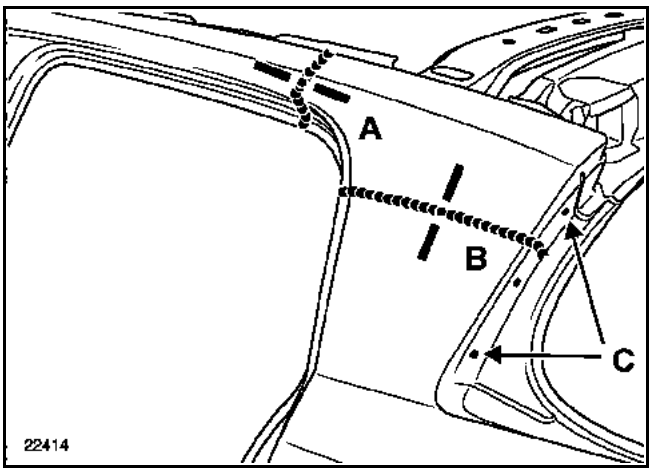

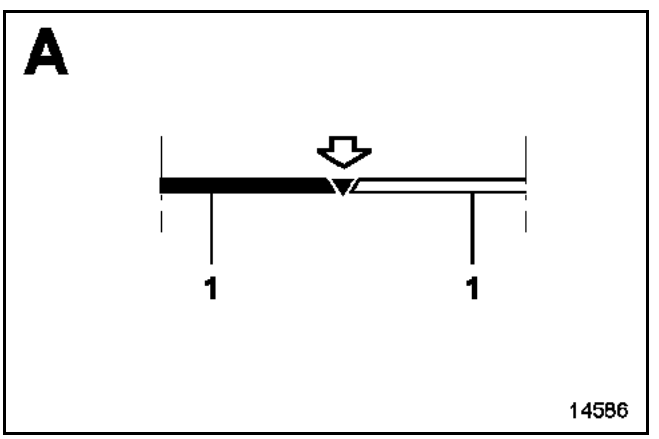

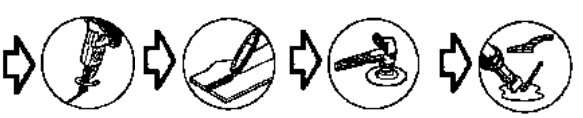

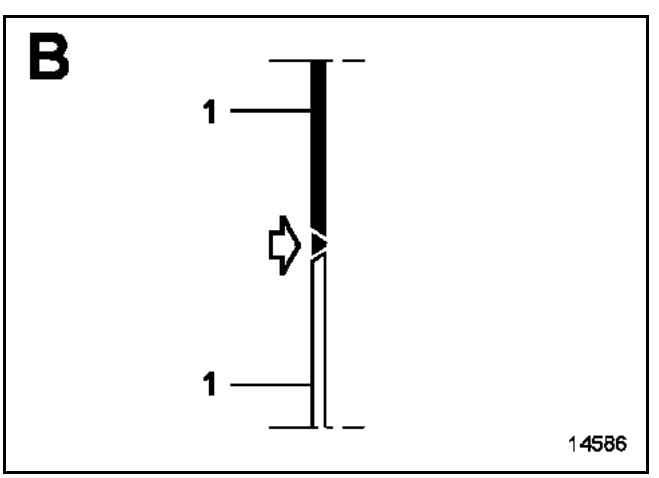

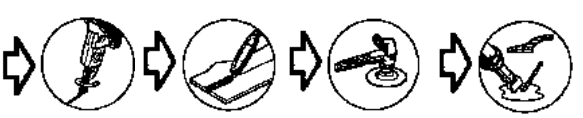

GETtheMANUALS.org

IMPORTANT: cut (a') should be made between the two square slots **C** of the wing panel upper rain channel to ensure that it is covered by the replacement part.

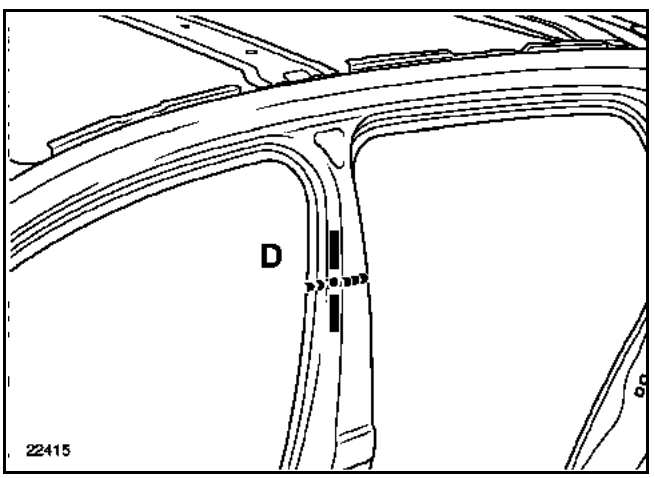

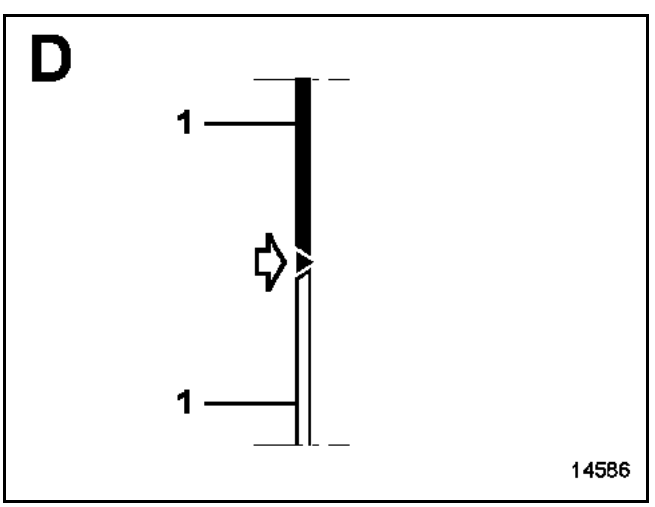

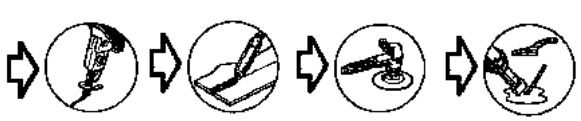

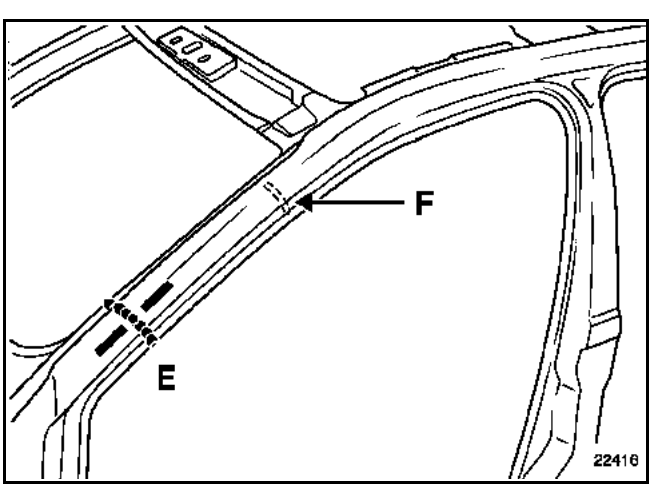

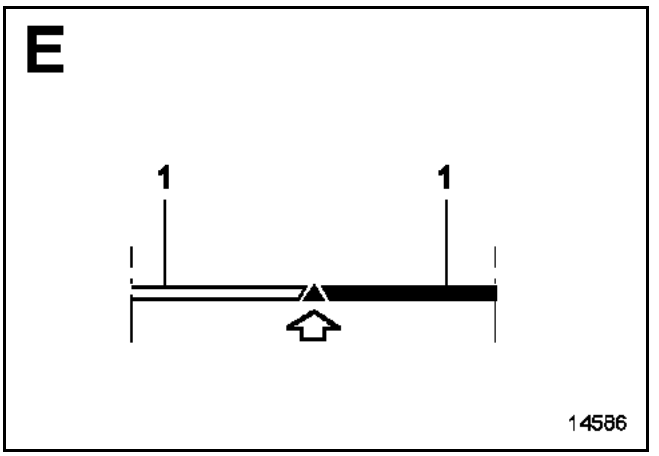

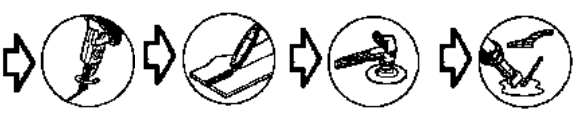

IMPORTANT: avoid making cut (c) near to expanding insert **F** shown as a dotted line in the diagram.

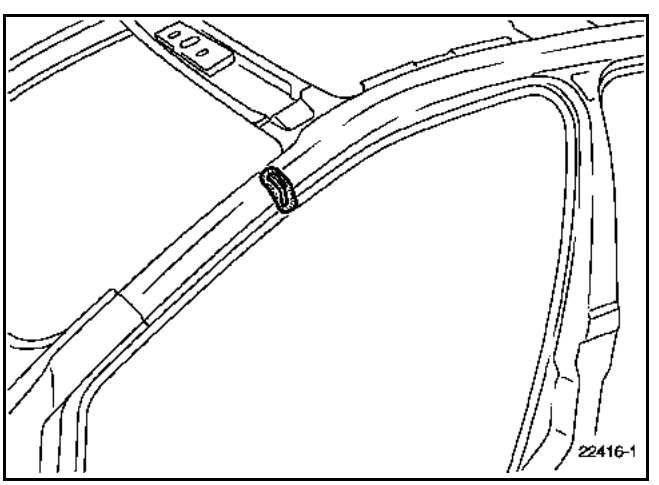

REMINDER: it is essential to replace the expanding insert (see method described in **section 43A-A**).

GETtheMANUALS.org

The replacement of this part is a complementary operation to the replacement of the quarter panel reinforcement for a side impact.

The information on the additional parts will be dealt with in their corresponding sections (refer to contents).

NOTE: this operation is not particularly difficult.

For information purposes, there are one or more diagrams of the part fitted to the vehicle or removed.

Where spot welds cannot be made with the spot welder, they can be replaced by plug welds.

COMPOSITION OF THE REPLACEMENT PART

Part supplied on its own.

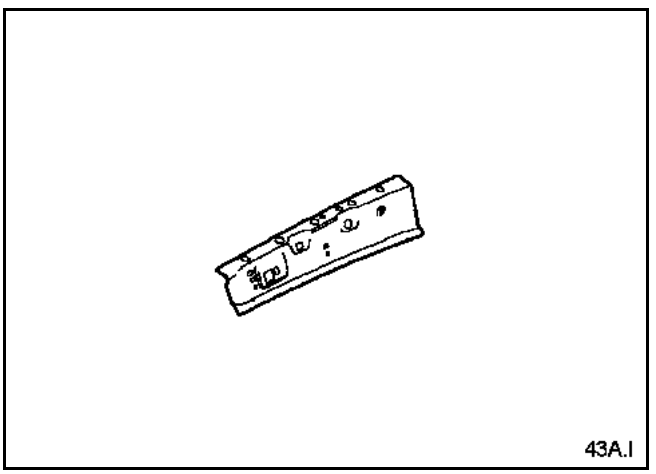

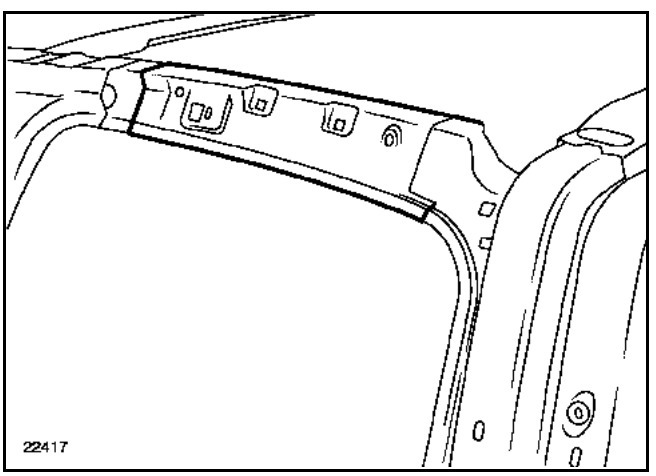

GETtheMANUALS.org

The replacement of this part is a complementary operation to the roof and scuttle side panel reinforcements for a front side impact.

It is part of the process of method no. 2 (see the introduction to **section 40A-C: Description of parts**).

NOTE: the part covers two types of sales, (B-pillar and body side, front section).

The following sections must be referred to for details of the cuts in this part:
– Section 43A-A A-pillar (cuts a, d),
– Section 43A-E B-pillar (cuts b, d and e),
– Section 43A-H Body top (cuts a, b and c).

The following must also be ordered:
– Windscreen pillar expanding insert,
– A-pillar expanding insert,
– B-pillar expanding insert,

COMPOSITION OF THE REPLACEMENT PART

Part assembled:
A-pillar upper reinforcement
Welded studs
Welded pins.
Welded bolts
Crimped nuts
A-pillar reinforcement
Hinge reinforcements
Hinge mounting plate
Hinge mounting cage
Door stop reinforcement

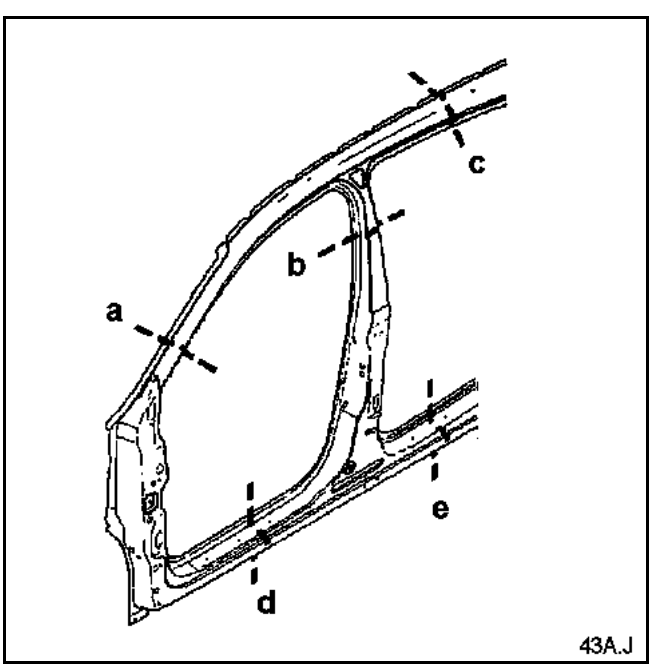

GETtheMANUALS.org

The replacement of this part is a basic operation for a rear side collision.

In the procedure described below, you will only find the descriptions and the joints which are specific to the part concerned.

The information on the additional parts will be dealt with in their respective chapters (refer to contents).

To perform this operation, the following must also be ordered:
– the central expanding insert,
– the lower expanding insert.

There are several possible cutting points (refer to the following procedure):
– cut (c) avoids the need to restore the anti-chip protection under the body,
– cut (e) avoids removal of the roof panel,
– cut (b) avoids removal of the tailgate,
– cut (a) requires removal of the roof,
– Cut (d) requires restoration of the anti-chip protection under the body.

The combination of cutting points are selected according to the damage.

NOTE:
It is recommended that cut (b) is made in the lower section of the rear wing pillar to reduce the length of the cut and limit the risks of deformation during welding.

From this position, it is also possible to carry out conventional butt welding.

Where spot welds cannot be made with the spot welder, they can be replaced by plug welds.

For the sections which require bonding, it will be necessary to use bodywork cement **MCT 514** (**part no.: 77 11 172 674**).

COMPOSITION OF THE REPLACEMENT PART

Part assembled with:
Door striker plate reinforcement
Wing panel rear lower extender

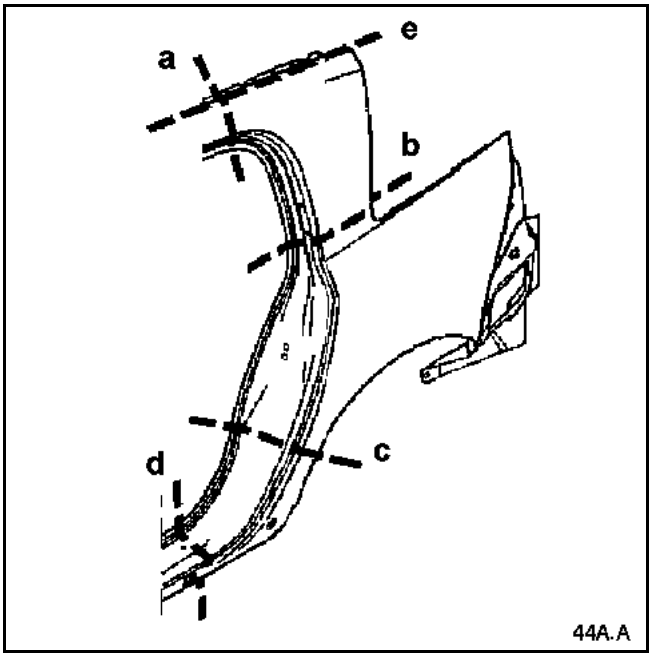

PARTS CONCERNED (thickness in mm):

1	Rear wing panel	0.8
2	Outer wheel arch	0.7
3	Wing panel extender	0.7

Details concerning cut (b)

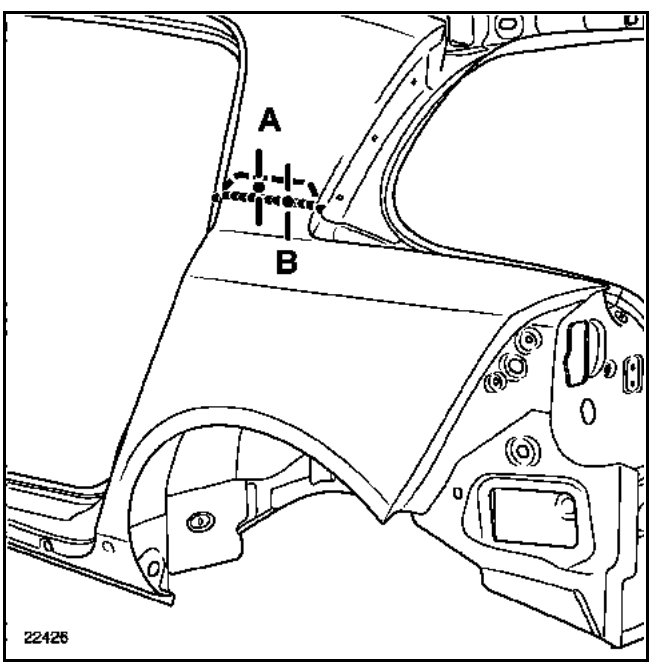

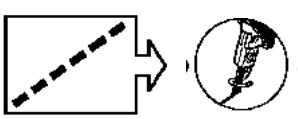
on replacement part

GETtheMANUALS.org

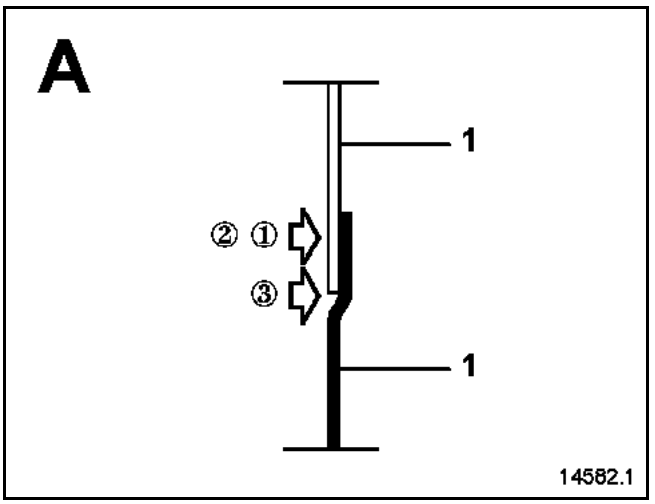

① on the vehicle

② X4

③

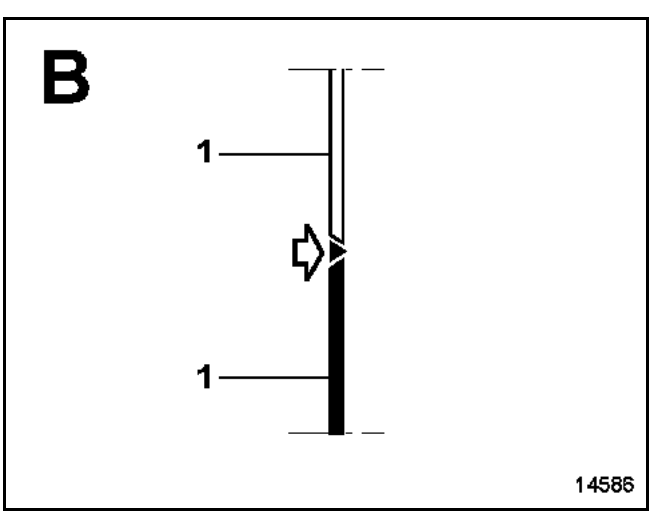

Details concerning cut (c)

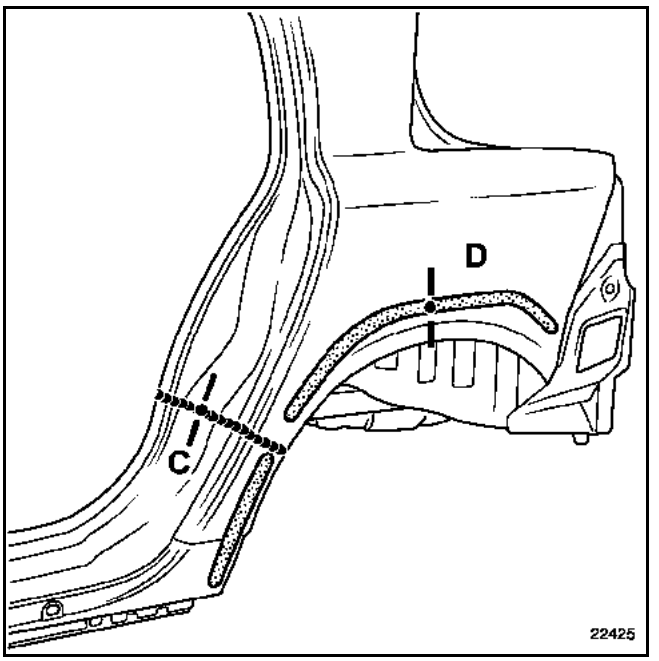

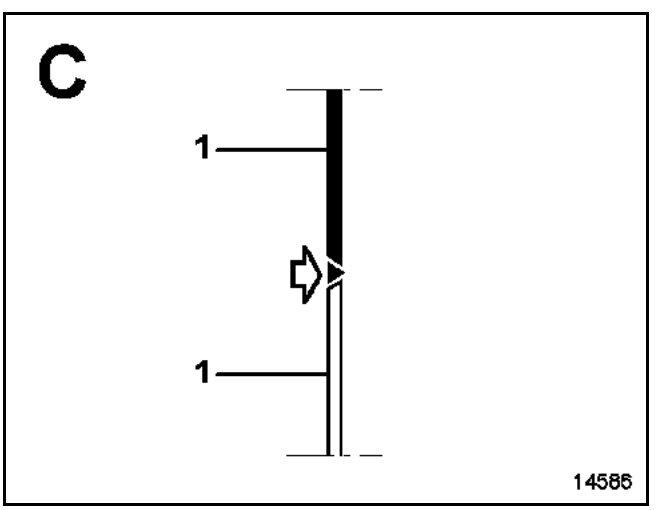

GETtheMANUALS.org

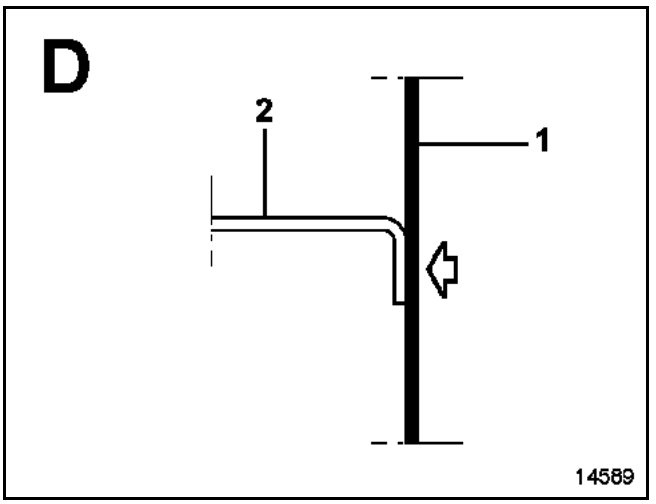

NOTE:
Leave a space in the cut area (c) to avoid contaminating the weld bead.

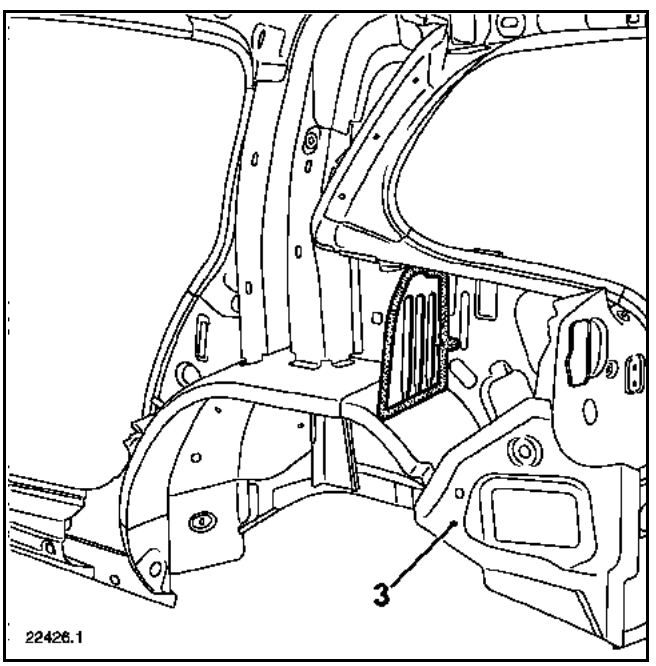

NOTE:
The replacement wing panel is assembled with the panel extender (3).

If the extender has not been damaged by the impact, it is necessary to remove the extender from the replacement part and leave the original extender on the vehicle.

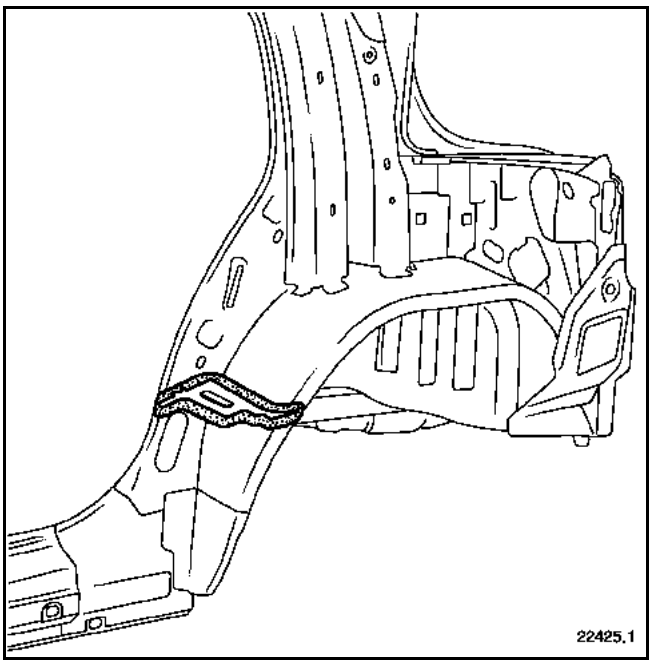

REMINDER: the expanding inserts have to be replaced (refer to the procedure described in **section 43A-A**).

Details concerning cut (d)

NOTE:
In the following pages you will only find special notes relating to partial cuts. The rest are the same as the procedure previously described.

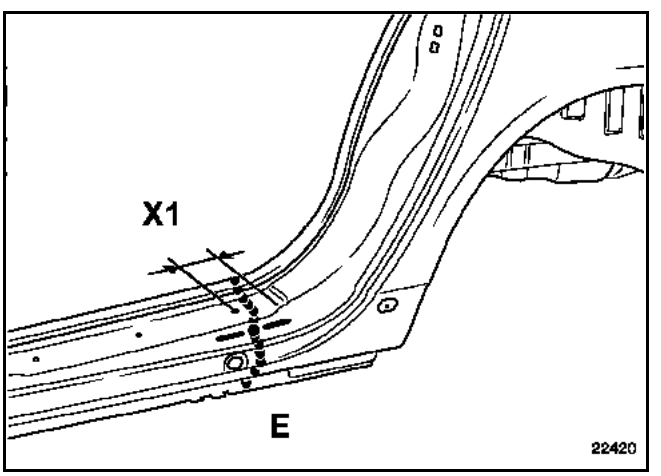

IMPORTANT:
Cut (d) must be made in area **X1**, to ensure that the replacement part covers it.

GETtheMANUALS.org

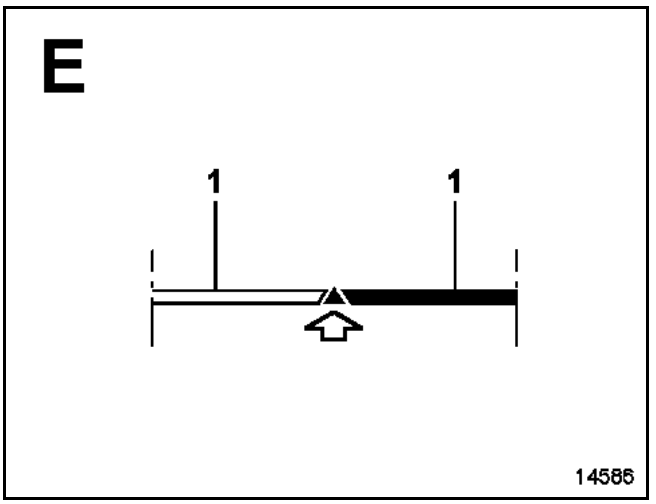

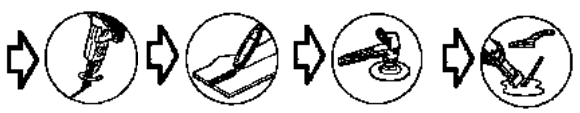

Details concerning cut (a)

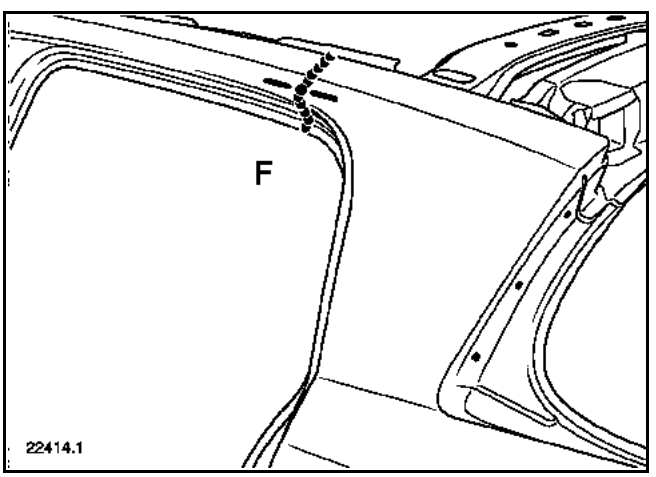

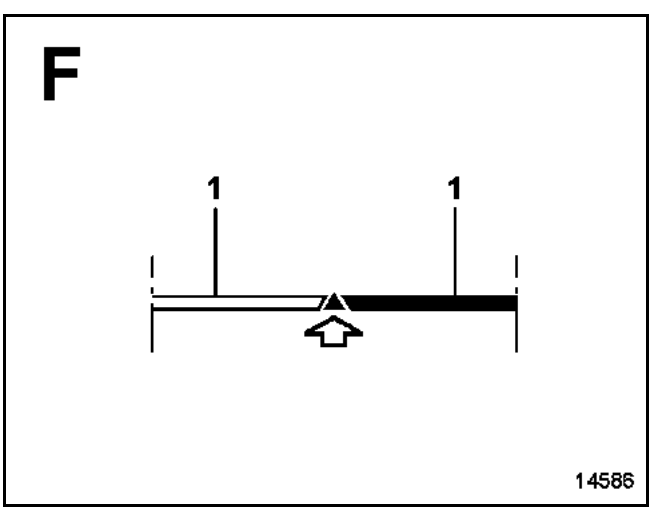

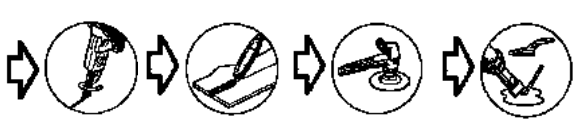

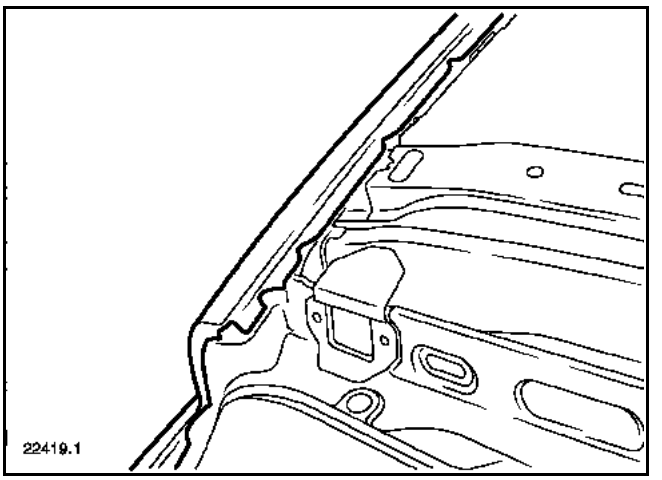

Details concerning cut (e)

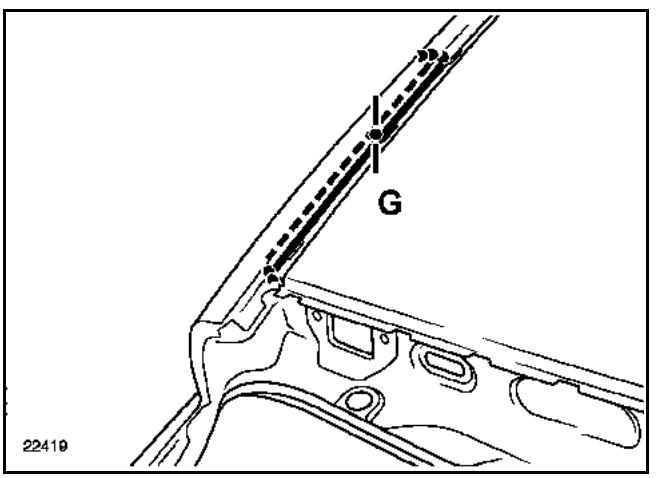

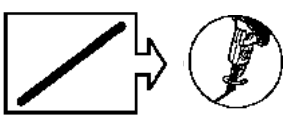

on replacement part

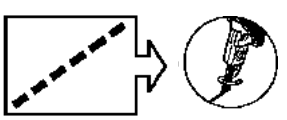

on the vehicle

GETtheMANUALS.org

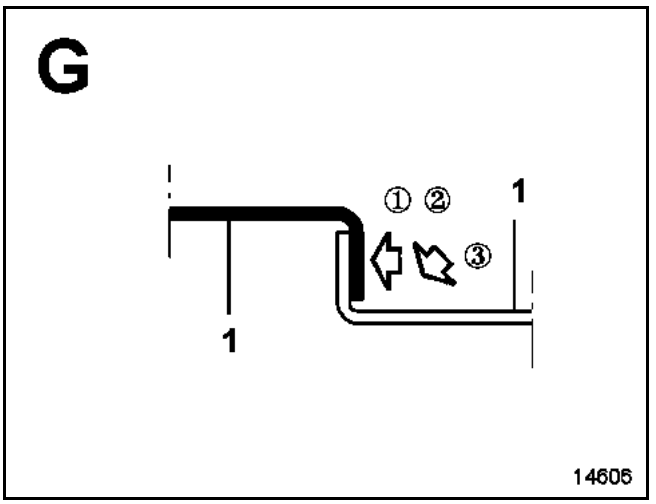

① on replacement part

②

③

NOTE:
The number of plugging points is not specified, it is necessary to leave a gap of approximately **60 mm** between the welding points, then after welding apply a mastic bead along the edge (operation ③) to ensure sealing and finish.
Use M.J. Pro type mastic (**part no.: 77 11 172 676**).

GETtheMANUALS.org

The replacement of this part is a basic operation for a front side impact to the lower section.

In the procedure described below, you will only find the descriptions and the joints which are specific to the part concerned.

NOTE:
The operation presents no particular difficulties. You will find one or more drawings of the part either on the vehicle or removed from it in the method for your information.

Where spot welds cannot be made with the spot welder, they can be replaced by plug welds.

For the sections which require bonding, it will be necessary to use bodywork cement **MCT 514** (**part no.: 77 11 172 674**).

COMPOSITION OF THE REPLACEMENT PART

Part supplied on its own.

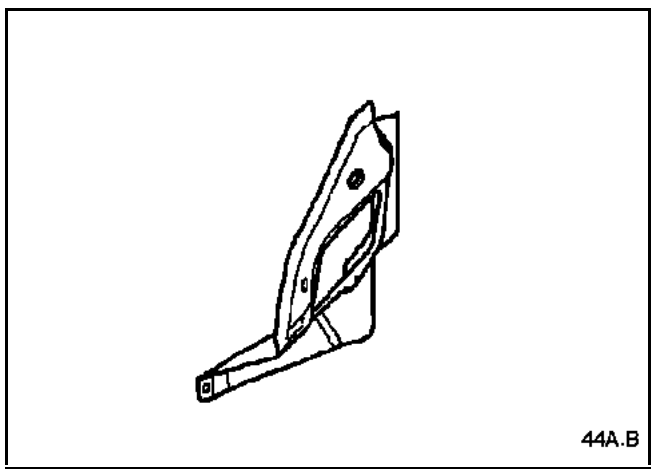

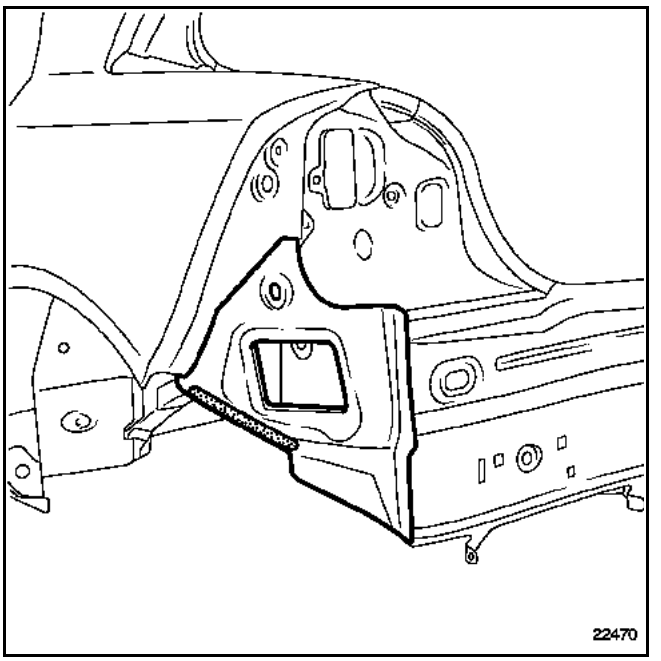

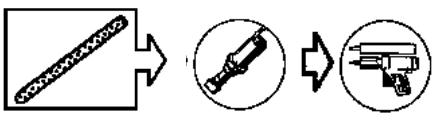

GETtheMANUALS.org

The replacement of this part is a complementary operation to the replacement of the rear wing panel with lamp mounting for a rear impact.

The information on the additional parts will be dealt with in their respective chapters (refer to contents).

NOTE:
The operation presents no particular difficulties.

You will find one or more drawings of the part either on the vehicle or removed from it in the method for your information.

Where spot welds cannot be made with the spot welder, they can be replaced by plug welds.

COMPOSITION OF THE REPLACEMENT PART

Part supplied with:
Rear side rain channel
Welded shaft

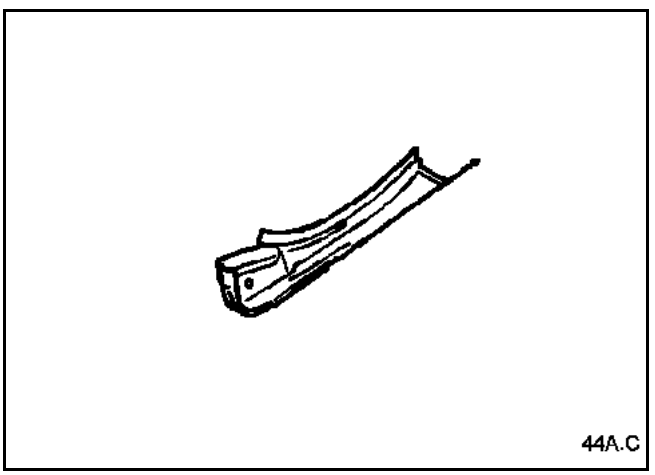

PARTS CONCERNED (thickness in mm):

1	Wing panel lower rain channel	0.7
2	Wing panel upper rain channel	0.7

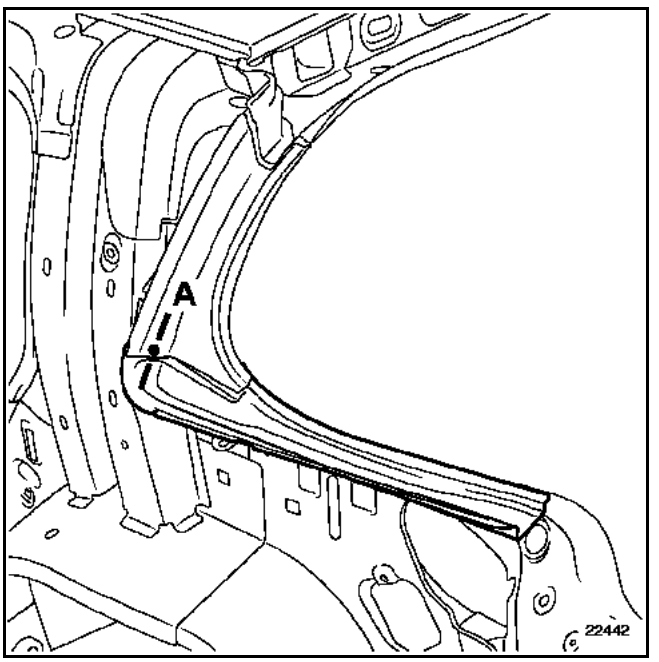

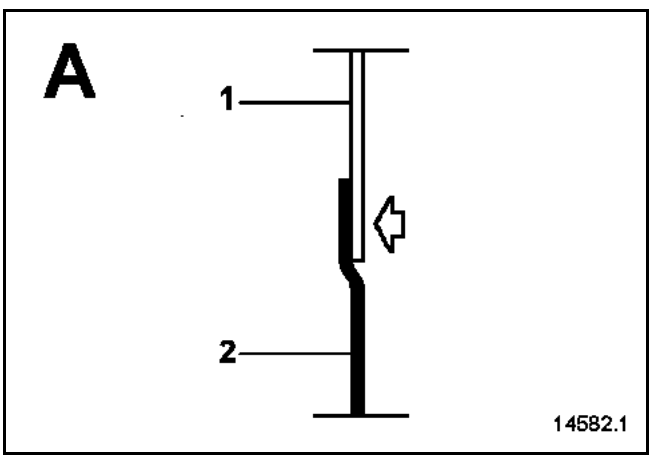

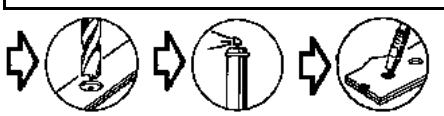

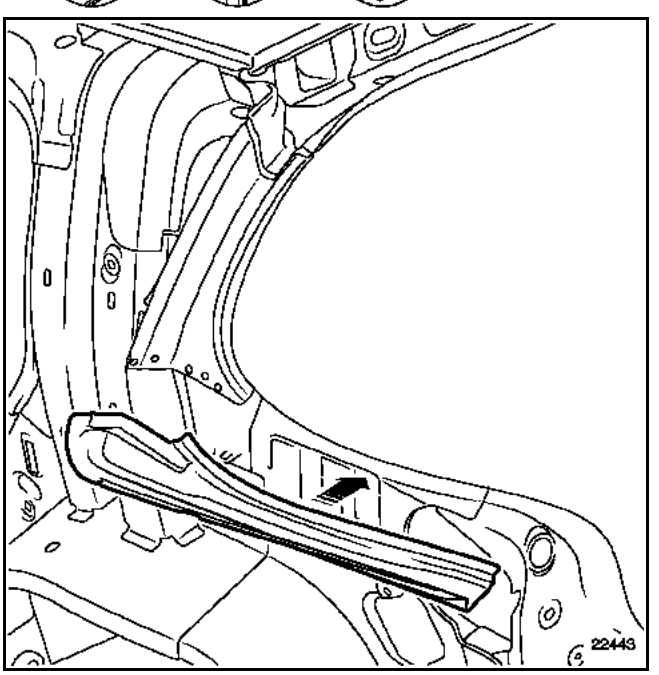

GETtheMANUALS.org

The replacement of this part is a complementary operation to the replacement of the rear wing panel or the end panel for a rear side impact.

In the procedure described below, you will only find the descriptions and the joints which are specific to the part concerned.

The information on the additional parts will be dealt with in their respective chapters (refer to contents).

NOTE:
The operation presents no particular difficulties.

You will find one or more drawings of the part either on the vehicle or removed from it in the method for your information.

Where spot welds cannot be made with the spot welder, they can be replaced by plug welds.

COMPOSITION OF THE REPLACEMENT PART

Part supplied with:
Lower rain channel
Central rain channel
Rear side rain channel
Ball joint mounting reinforcement
Ball joint
Conical spring washer
Welded shaft
Crimped nut

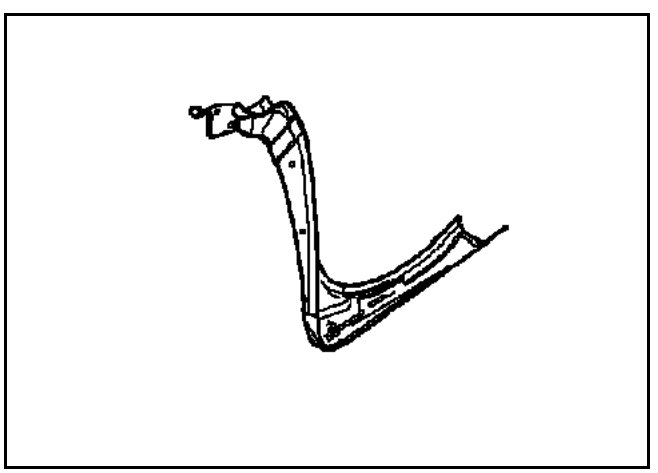

PARTS CONCERNED (thickness in mm):

1	Upper section of wing panel drip moulding	1.5
2	Central section of wing panel drip moulding	0.7
3	Lower section of wing panel drip moulding	0.7
1	Roof panel rear cross member	1
2	Roof rear cross member lining	1.2

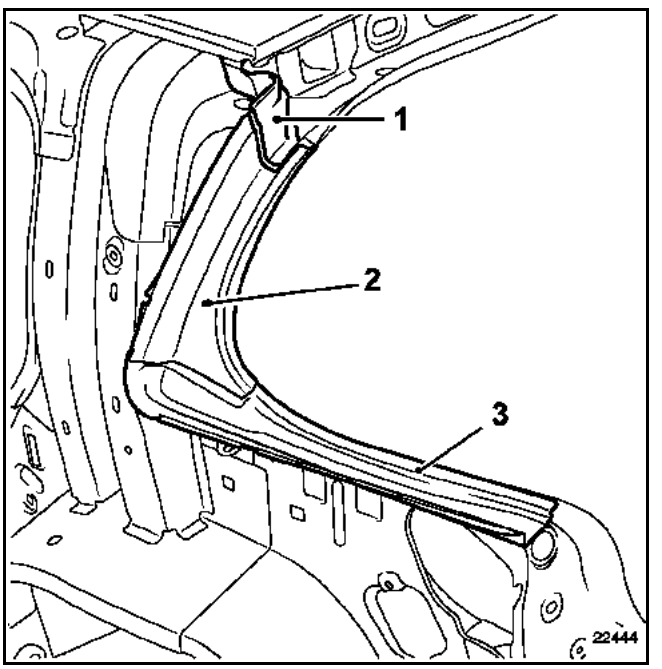

The wing panel upper rain channel consists of three sections:
– upper section (1),
– centre section (2),
– lower section (3).

Depending on the level of impact, it is possible to replace only the damaged parts.

This type of operation requires the removal of the replacement parts from the assembly supplied by the Parts Department.

In the following you will find an example of how to replace the central and lower sections (2 and 3).

GETtheMANUALS.org

Replacing sections 2 and 3

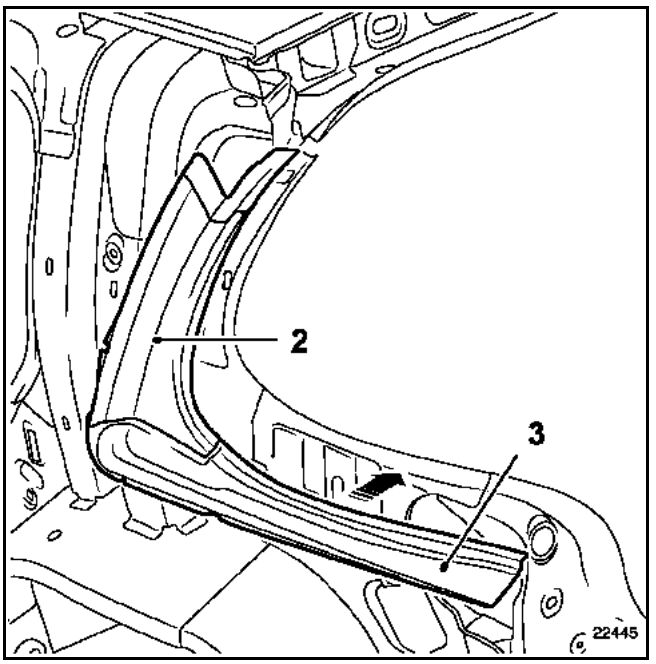

Note on replacing section 1

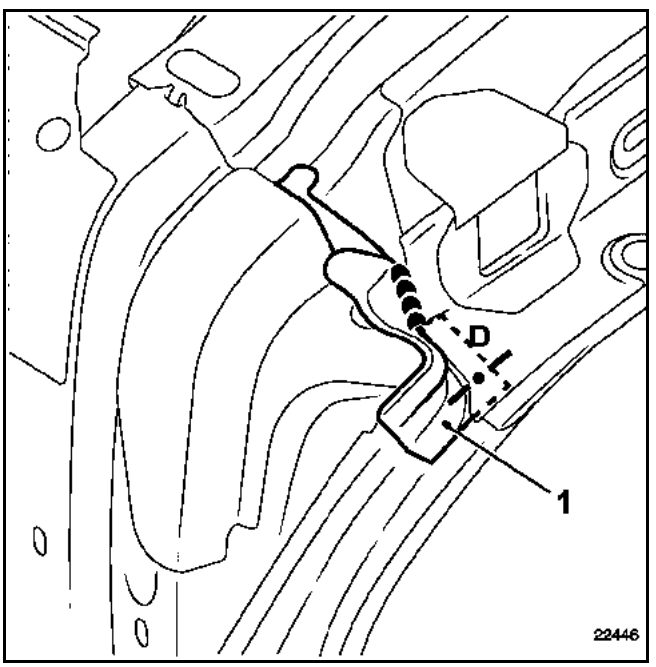

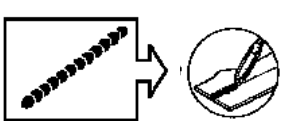

L 30

IMPORTANT:
The complete replacement of the upper section (1) is an operation complementary to replacement of the roof.

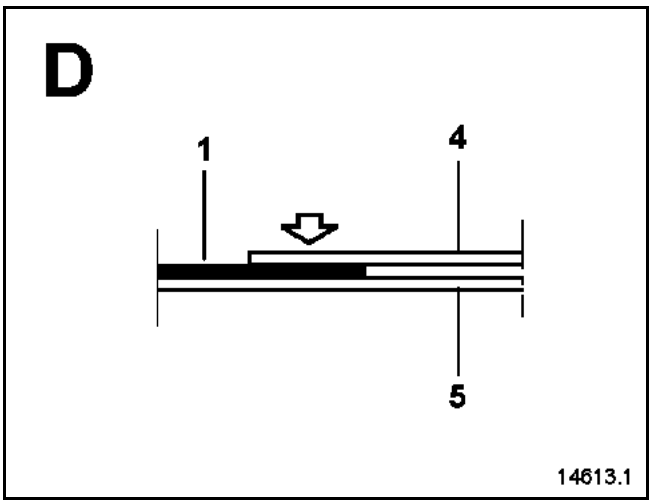

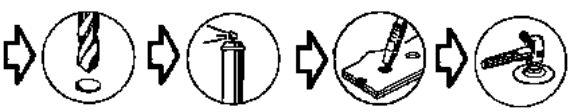

X 2

GETtheMANUALS.org

The complete replacement of this part is a complementary operation to the replacement of the rear wing panel for a rear side impact.

The information on the additional parts will be dealt with in their respective chapters (refer to contents).

This operation may be carried out in two ways (refer to the procedure given below):
– complete, complementary to the quarter panel reinforcements and the complete rear wing panel,
– complete, complementary to the quarter panel reinforcements and the partial removal of the rear wing panel,
– front section using cut (a),
– sections (1) or (3).

NOTE:
The operations in the procedure are carried out on the left-hand part. The right-hand side of the vehicle has a slightly different shape due to the fuel filler neck, but the replacement method is the same.

Where spot welds cannot be made with the spot welder, they can be replaced by plug welds.

COMPOSITION OF THE REPLACEMENT PART

Part assembled with:
Front section
Rear section
Centre section (right side only)
Welded earth stud
Parcel shelf bridge piece
Lower component
Crimped nut
Welded studs

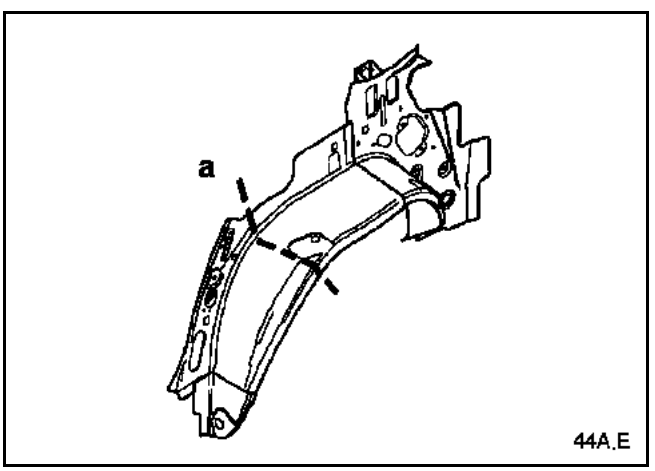

PARTS CONCERNED (thickness in mm):

1	Rear wheel arch lower component	1.2
2	Rear wheel arch	0.7
3	Rear wheel arch rear section	0.7

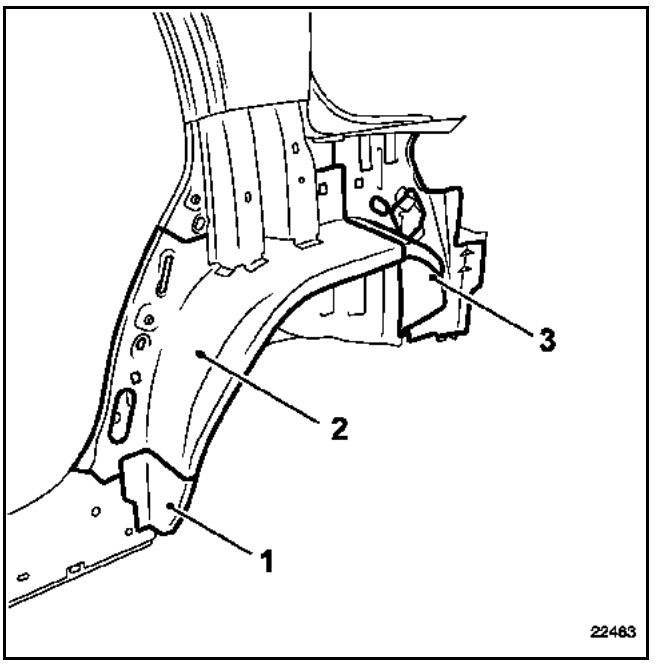

The outer rear wheel arch consists of three sections:
– lower component (1),
– front section (1 and 2),
– rear section (3).

Depending on the level of impact, it is possible to replace only the damaged parts.

This type of operation requires the removal of the replacement parts from the assembly supplied by the Parts Department.

GETtheMANUALS.org

Complete replacement, complementary to the quarter panel reinforcements and the complete rear wing panel

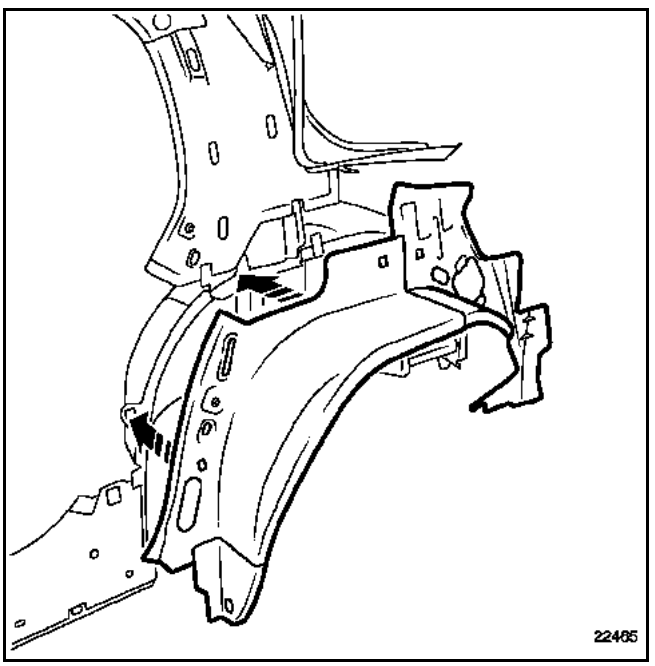

Complete replacement, complementary to the quarter panel reinforcements and the partial removal of the rear wing panel

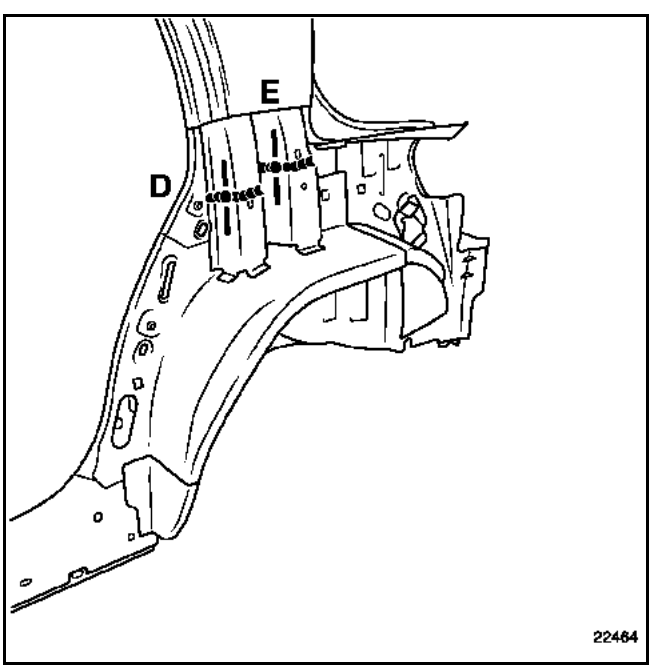

It is possible to cut both of the quarter panel reinforcements to avoid removing them completely.

IMPORTANT:
The cuts on the stiffeners should not be made at the same level.

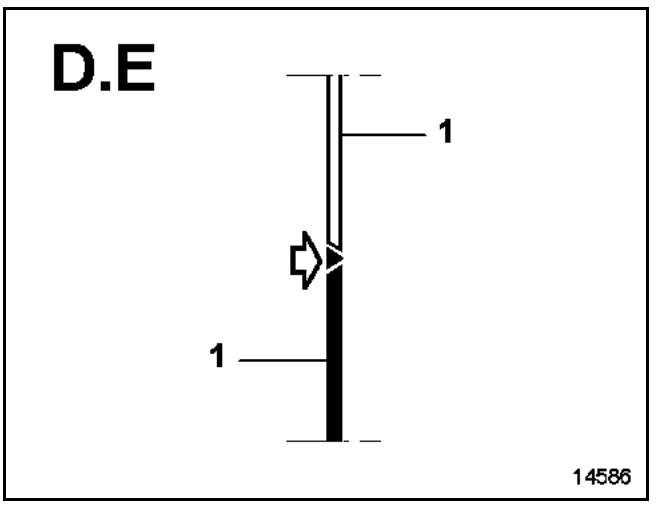

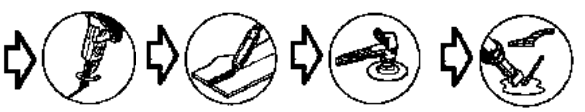

NOTE:
It is recommended that you re-use the stiffeners cut out previously, depending on their condition. If they are not in a satisfactory condition, the reinforcements assembly will also have to be ordered.

Replacing front sections 1 and 2 using cut (a)

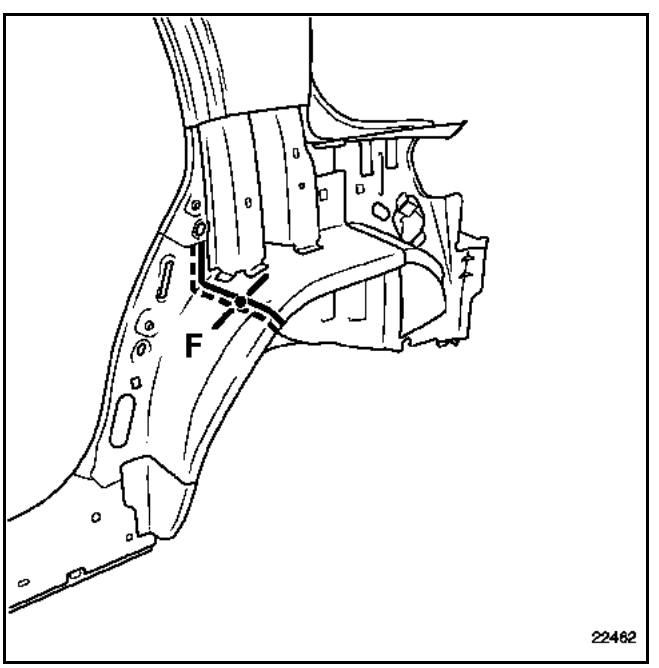

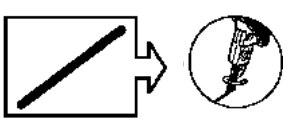
on replacement part

GETtheMANUALS.org

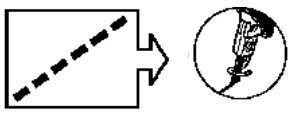

on the vehicle

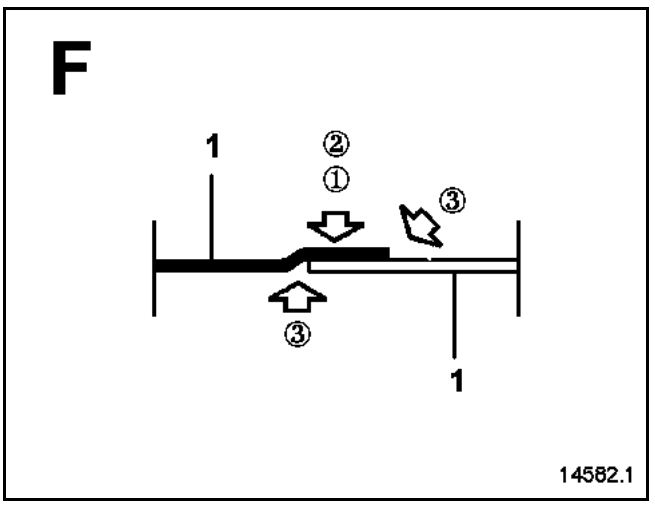

① on replacement part

②

③

NOTE:
The number of plug welds is not specified. It will be necessary to leave a gap of approximately **60 mm** between the welds, then after welding, apply a bead of mastic in the flange (operation ③) to ensure sealing and finish.
Use M.J. Pro type mastic (**part no.: 77 11 172 676**).

Partial replacement (3) for example

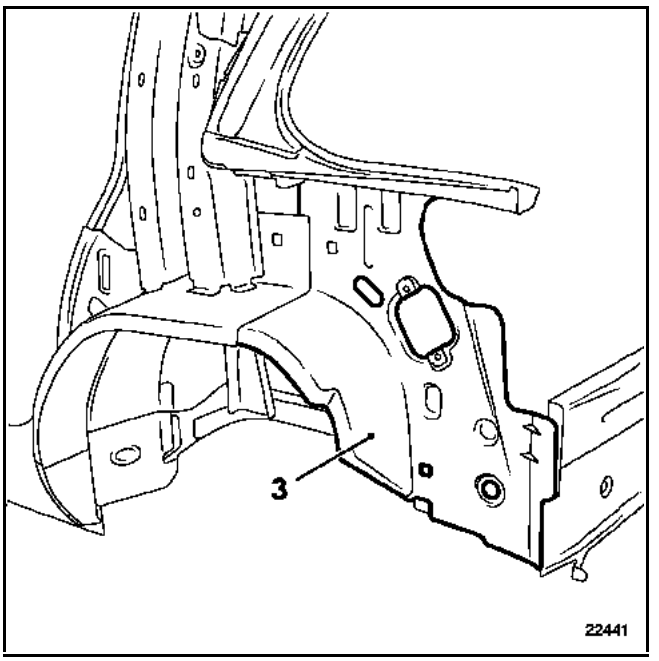

GETtheMANUALS.org

The complete replacement of this part is a complementary operation to the replacement of the outer wheel arch for a rear side impact.

The information on the additional parts will be dealt with in their respective chapters (refer to contents).

This operation may be carried out in two ways (refer to the procedure given below):
– complete, complementary to the quarter panel lining,
– lower section.

NOTE:
The operations in the method are carried out on the left-hand inner wheel arch. The right-hand side of the vehicle has a slightly different shape due to the fuel reservoir filler neck, but the replacement method is the same.

Where spot welds cannot be made with the spot welder, they can be replaced by plug welds.

COMPOSITION OF THE REPLACEMENT PART

Part supplied with:
Seatback mounting reinforcement
Inner arch
Wheel arch stiffener
Inner wheel arch
Stiffener
Shock absorber mounting reinforcement
Shock absorber clevis
Nuts

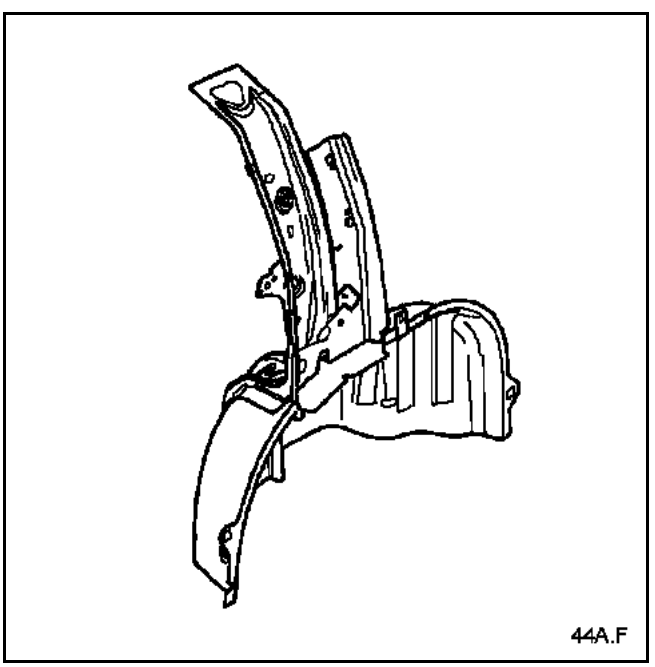

PARTS CONCERNED (thickness in mm):

1	Inner wheel arch	0.7
2	Wheel arch	0.7
3	Seatback mounting reinforcement	1.5
4	Wheel arch reinforcement	1.5

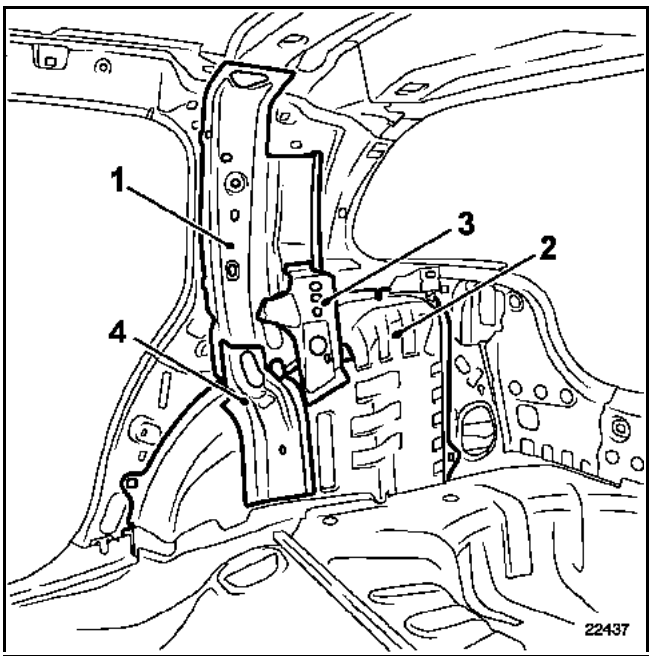

The inner rear wheel arch consists of four sections:
– inner arch (1),
– wheel arch (2),
– seatback mounting reinforcement (3),
– wheel arch reinforcement (4).

Depending on the level of impact, it is possible to replace only the damaged parts.

This type of operation requires the removal of the replacement parts from the assembly supplied by the Parts Department.

GETtheMANUALS.org

Complete replacement, complementary to the quarter panel lining

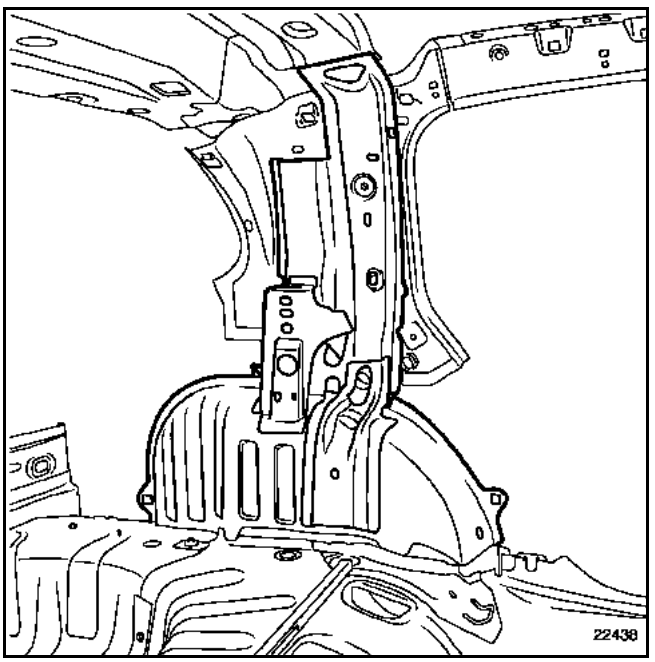

Replacing section 2, 3 and 4 for example

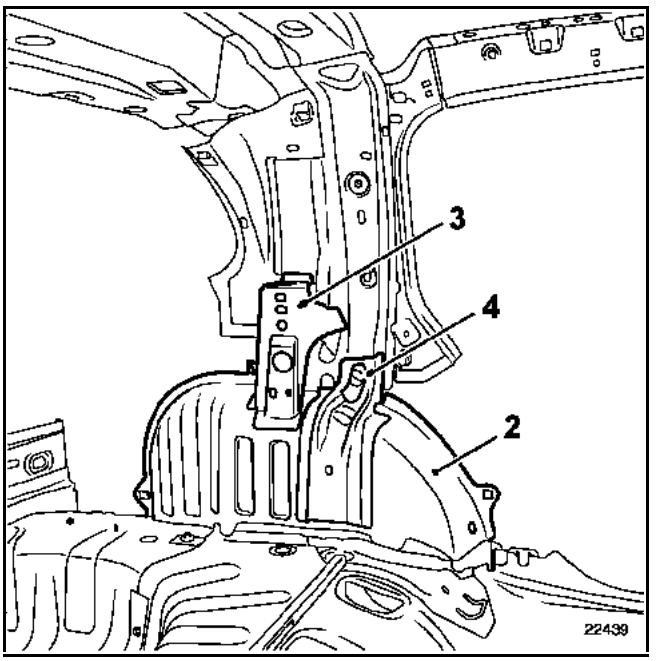

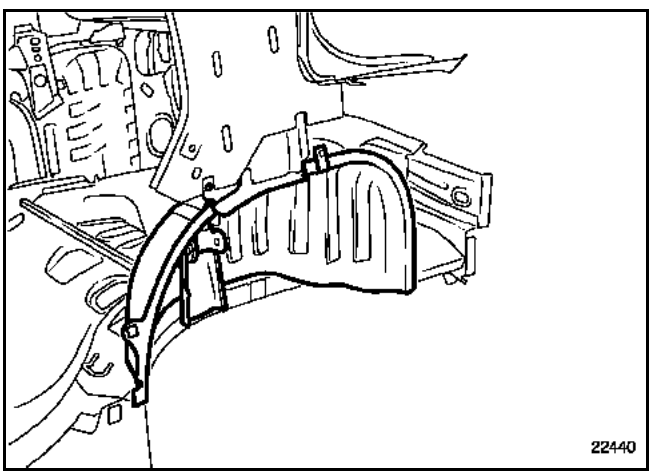

GETtheMANUALS.org

The replacement of this part is a complementary operation to the replacement of the outer wheel arch and the quarter panel lower reinforcement for a side impact.

The information on the additional parts will be dealt with in their respective chapters (refer to contents).

This operation may be carried out in two ways (refer to the procedure given below):
– complete, complementary to the roof panel and the rear outer wheel arch,
– sections 1 and 2 using cut (a), with the rear outer wheel arch, avoiding the removal of the roof panel,
– section 3, with the roof panel and body top.

NOTE:
The operations in the procedure are carried out on the left-hand part. The right-hand side of the vehicle has a slightly different shape, but the replacement method is the same.

Where spot welds cannot be made with the spot welder, they can be replaced by plug welds.

COMPOSITION OF THE REPLACEMENT PART

Part assembled with:
Roll bar extender
Roof drip moulding reinforcement
Front reinforcement
Rear reinforcement

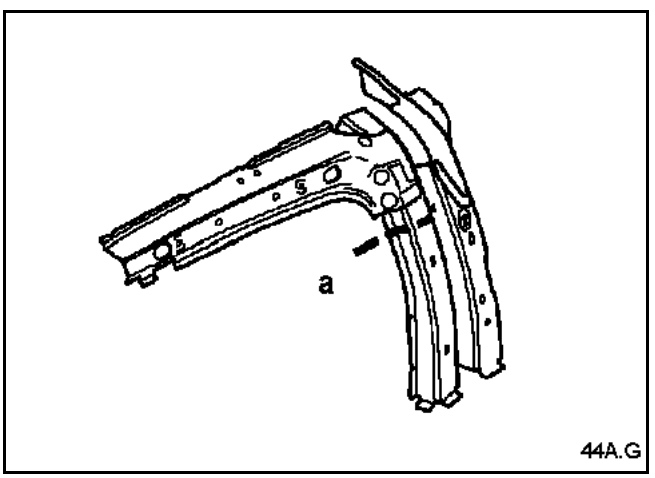

PARTS CONCERNED (thickness in mm):

1	Front quarter panel reinforcement	1
2	Rear quarter panel reinforcement	1
3	Roll bar extender	1.5
4	Roof drip moulding reinforcement	1

Complete replacement complementary to roof panel and outer rear wheel arch

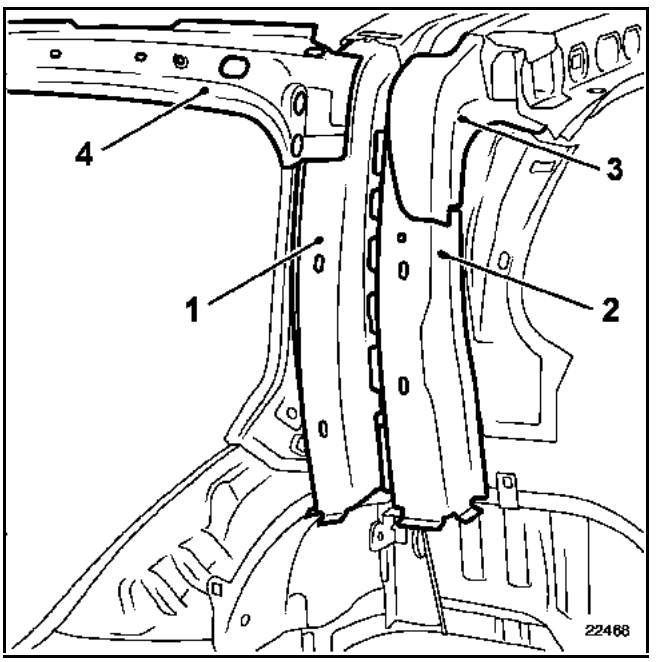

The quarter panel channel consists of several components:
– Front reinforcement (1),
– Rear reinforcement (2),
– Roll bar extender (3),
– Roof drip moulding reinforcement (4).

Depending on the level of impact, it is possible to replace only the damaged parts.

This type of operation requires the removal of the replacement parts from the assembly supplied by the Parts Department.

GETtheMANUALS.org

Replacing sections 1 and 2 in using cut (a) with the outer rear wheel arch

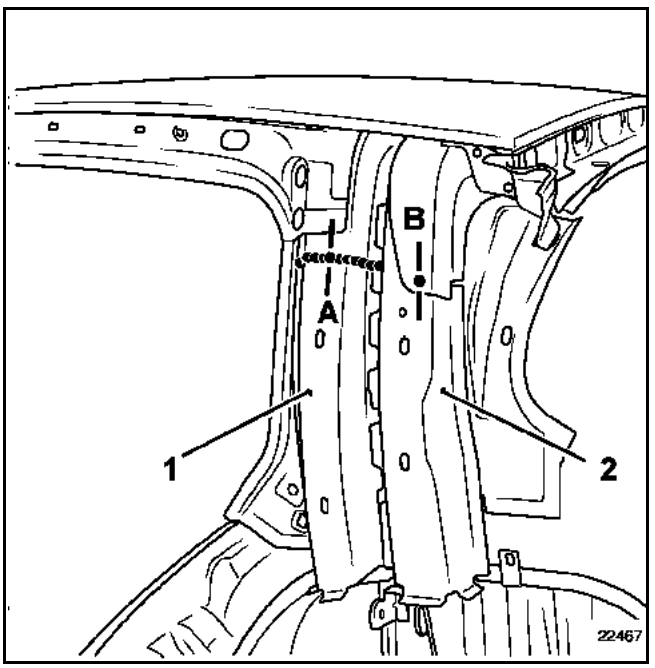

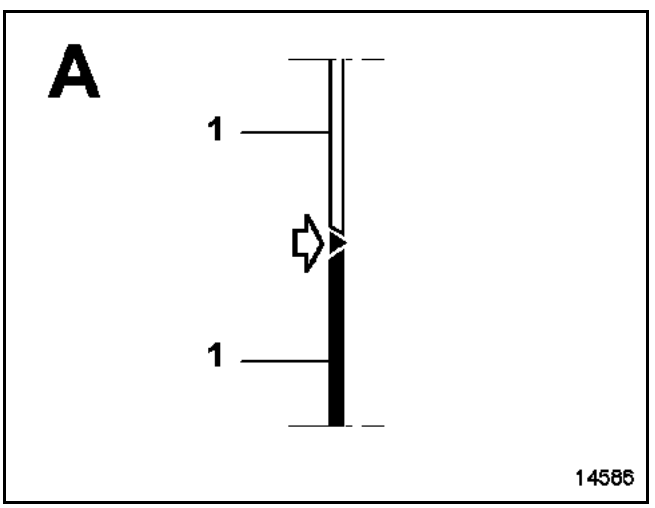

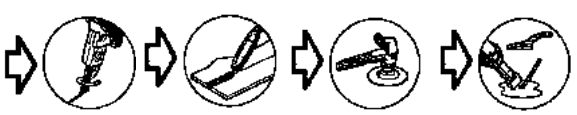

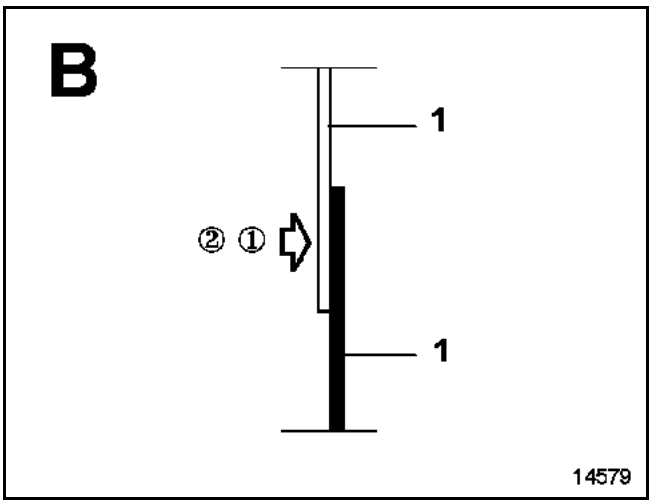

① on the vehicle

② X4

Replacing section 3 complementary to the removal of roof panel and body top, for example

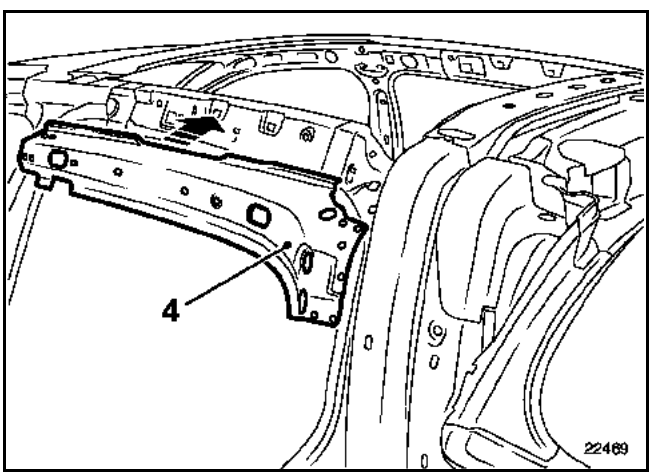

GETtheMANUALS.org

The replacement of this part is a complementary operation to the replacement of the quarter panel reinforcement for a rear side impact.

The information on the additional parts will be dealt with in their respective chapters (refer to contents).

NOTE:
The operation presents no particular difficulties.

You will find one or more drawings of the part either on the vehicle or removed from it in the method for your information.

Where spot welds cannot be made with the spot welder, they can be replaced by plug welds.

COMPOSITION OF THE REPLACEMENT PART

Part supplied with crimped nut.

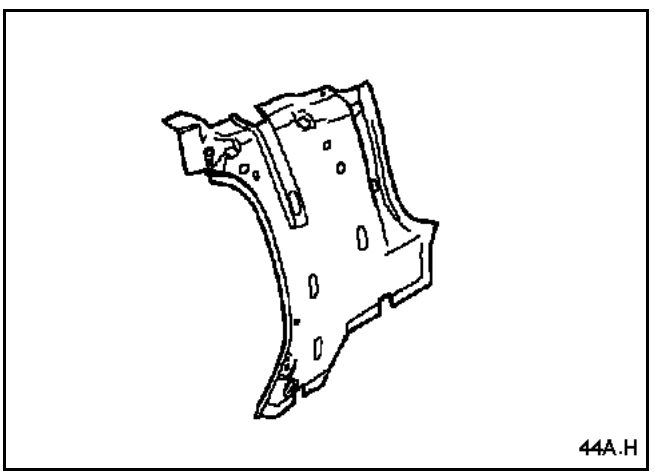

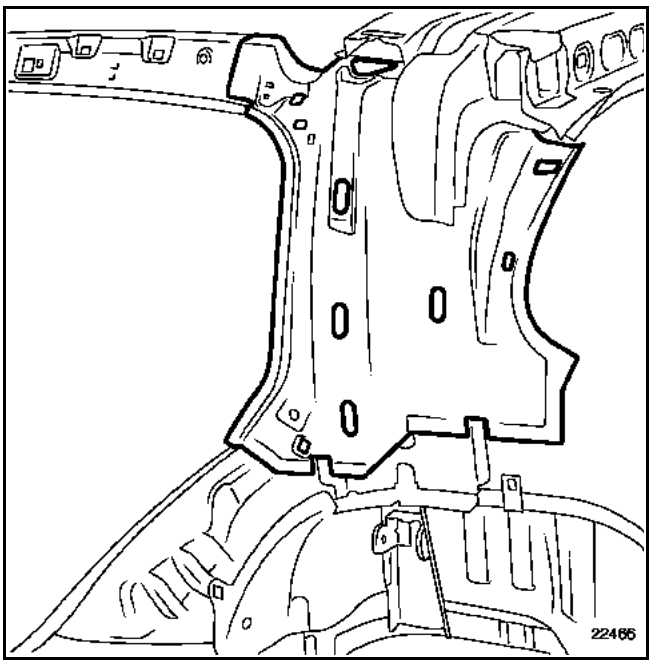

GETtheMANUALS.org

The replacement of this part is a complementary operation to the replacement of the end panel for a rear side impact and to the replacement of the rear wing panel for a rear side impact.

The information on the additional parts will be dealt with in their respective chapters (refer to contents).

NOTE:
The operation presents no particular difficulties.

You will find one or more drawings of the part either on the vehicle or removed from it in the method for your information.

Where spot welds cannot be made with the spot welder, they can be replaced by plug welds.

COMPOSITION OF THE REPLACEMENT PART

Part supplied with:
Tailgate centring fitting reinforcement
Plate cage
Pad
Welded earth stud

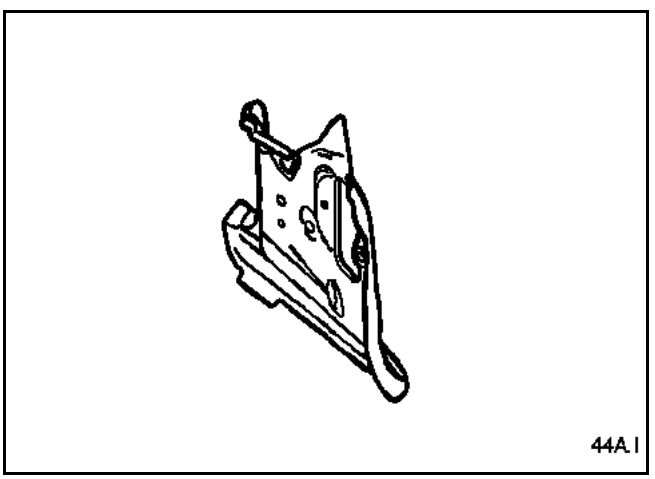

Replacement can be carried out when replacing the end panel

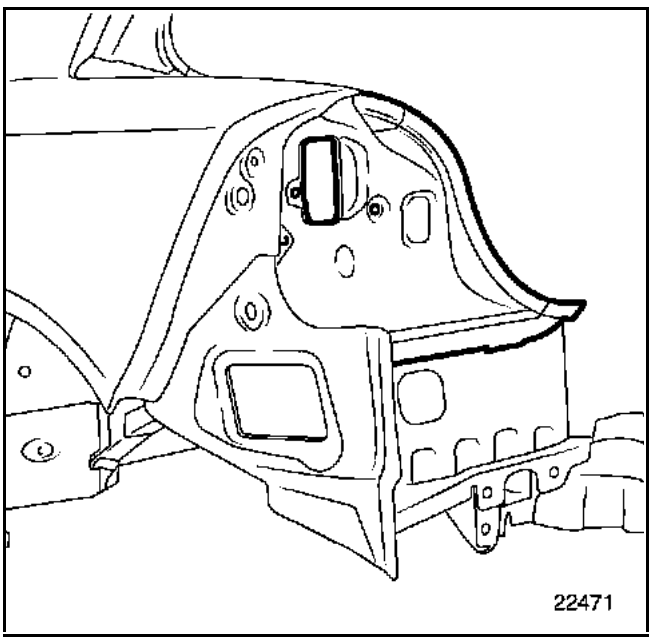

Replacement can be carried out when replacing the rear wing panel

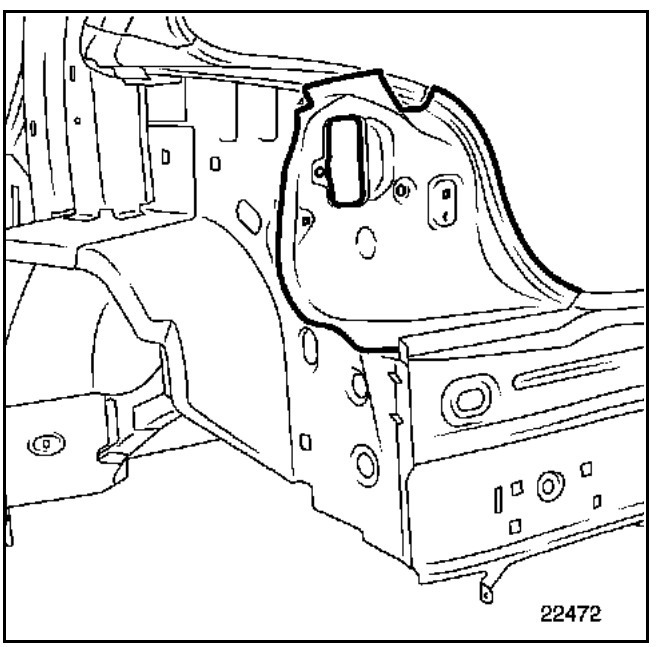

GETtheMANUALS.org

The replacement of this part is a basic operation for a rear impact.

The information on the additional parts will be dealt with in their respective chapters (refer to contents).

NOTE:
The operation presents no particular difficulties.

You will find one or more drawings of the part either on the vehicle or removed from it in the method for your information.

Where spot welds cannot be made with the spot welder, they can be replaced by plug welds.

COMPOSITION OF THE REPLACEMENT PART

Part supplied with:
Rear skirt
End panel lining
Rear end cross member
Striker support
Crimped nuts
Bumper mounting

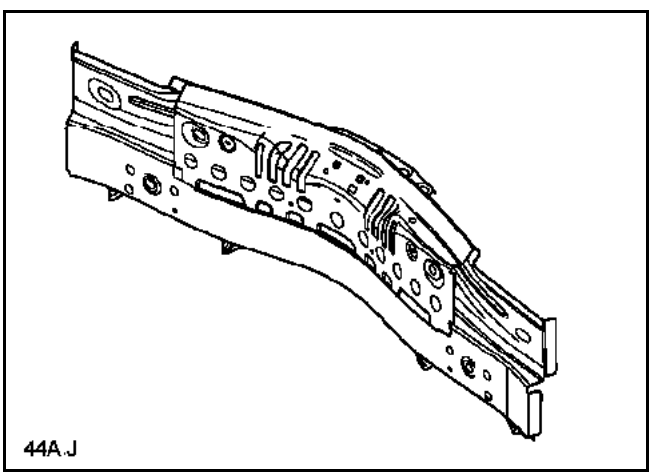

PARTS CONCERNED (thickness in mm):

1	Rear end panel lining	0.7
2	Rear end panel side lining	1

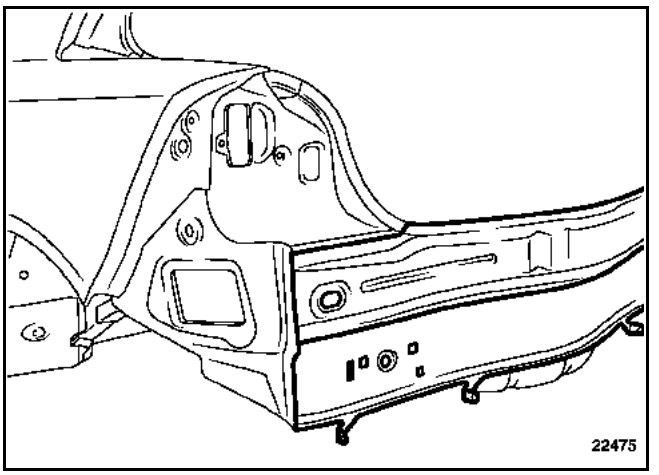

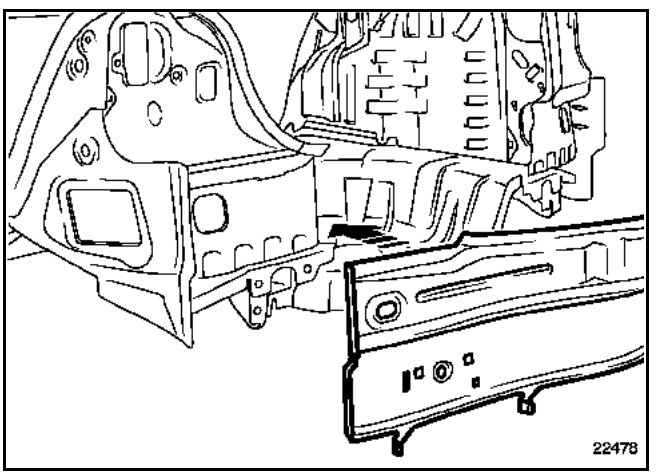

GETtheMANUALS.org

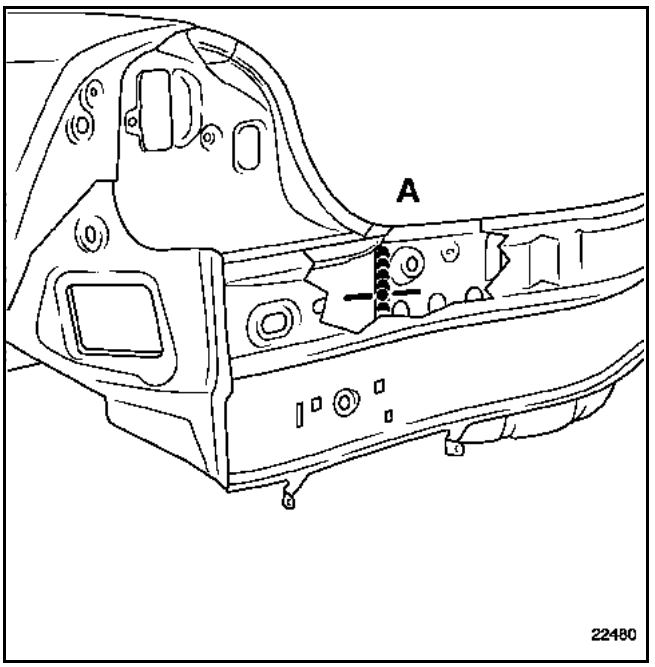

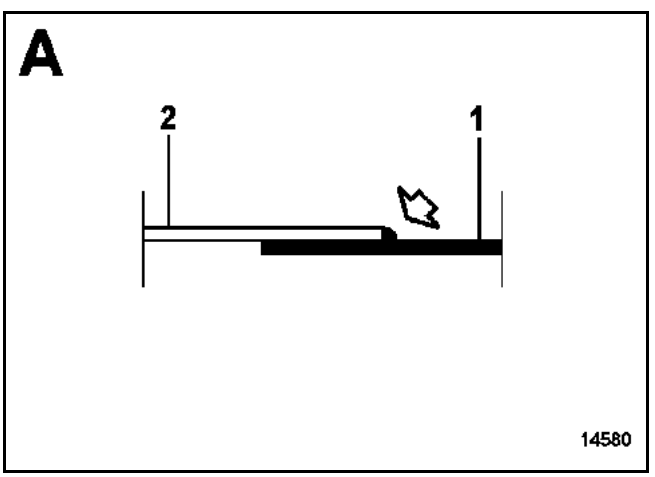

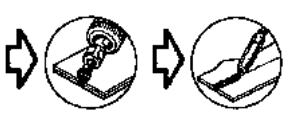 X2 L 30

NOTE:
The two weld beads are applied on each side from inside the vehicle.

GETtheMANUALS.org

The replacement of this part is a basic operation for a rear side collision.

The information on the additional parts will be dealt with in their respective chapters (refer to contents).

This operation may be carried out in two ways (refer to the procedure given below):
– complete,
– along cut (a).

NOTE:
The operation presents no particular difficulties.

You will find one or more drawings of the part either on the vehicle or removed from it in the method for your information.

Where spot welds cannot be made with the spot welder, they can be replaced by plug welds.

COMPOSITION OF THE REPLACEMENT PART

Part supplied on its own.

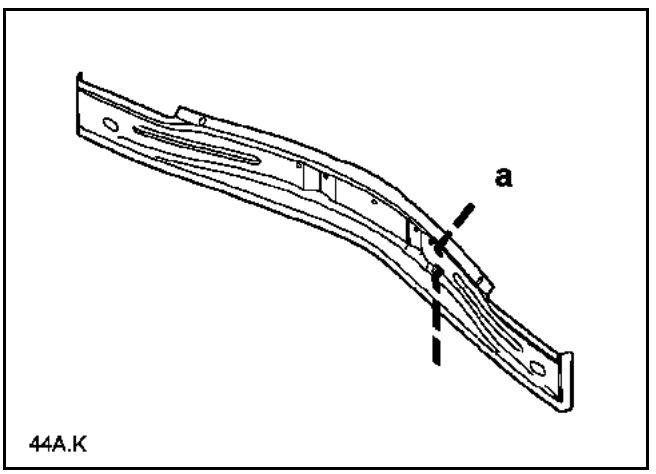

PARTS CONCERNED (thickness in mm):

1 Rear end panel 0.7

Replacment according to cut a

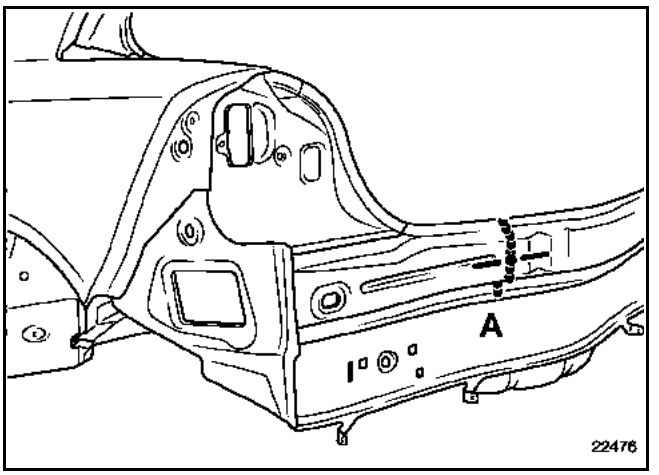

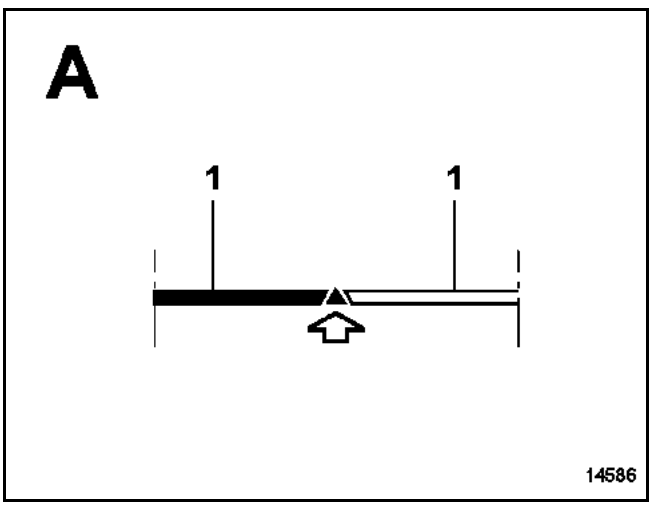

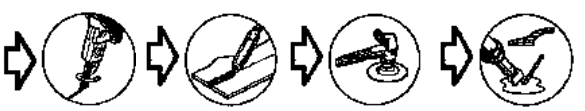

NOTE:
The position of the cut may vary depending on the section to be replaced. It should not be made on a slot.

GETtheMANUALS.org

Complete replacement

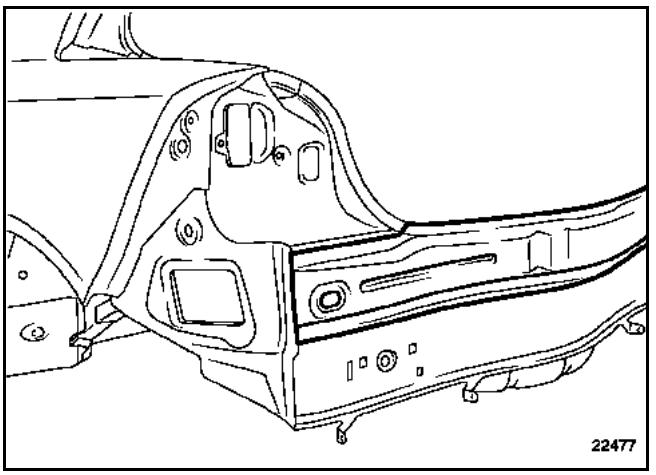

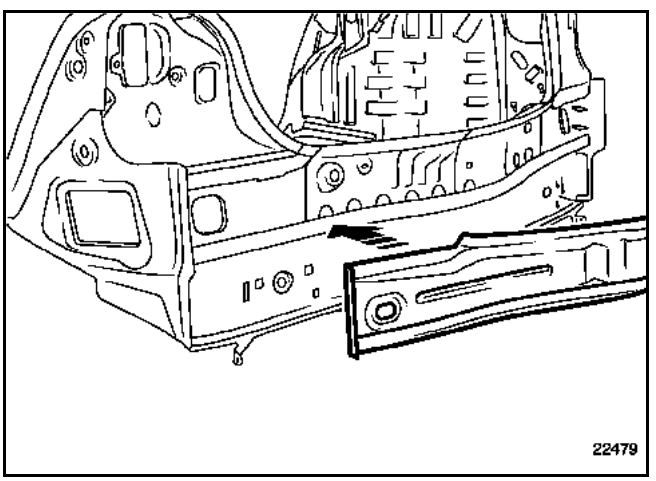

GETtheMANUALS.org

The replacement of this part is a complementary operation to the replacement of the end panel for a rear impact or the light support for a side impact.

The information on the additional parts will be dealt with in their respective chapters (refer to contents).

NOTE:
The operation presents no particular difficulties.

You will find one or more drawings of the part either on the vehicle or removed from it in the method for your information.

Where spot welds cannot be made with the spot welder, they can be replaced by plug welds.

COMPOSITION OF THE REPLACEMENT PART

Part supplied with crimped nut.

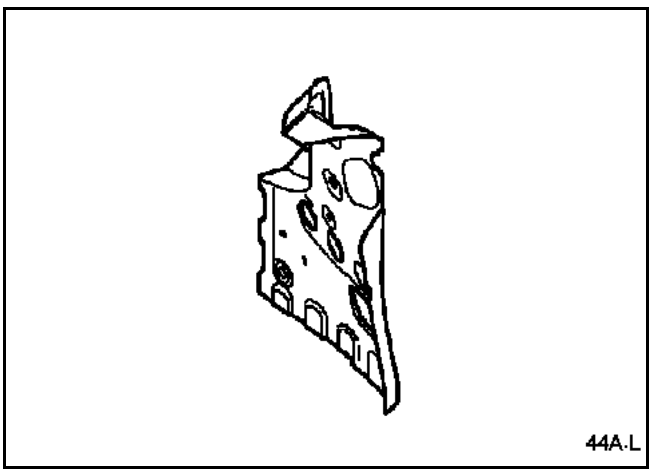

Replacement can be carried out when removing the rear end panel assembly

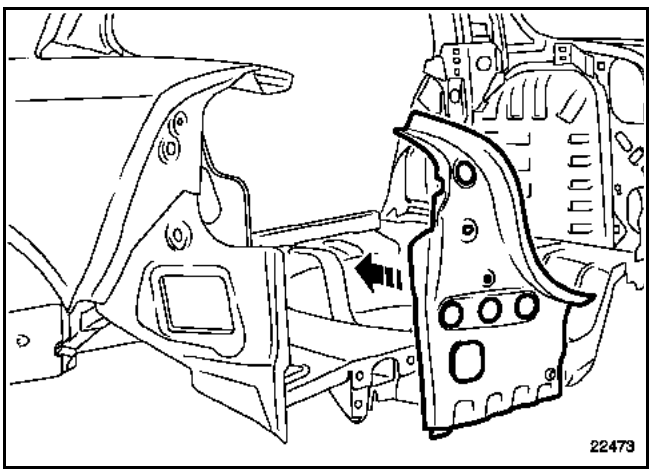

Replacement can be carried out when removing the light support without removing the rear end panel

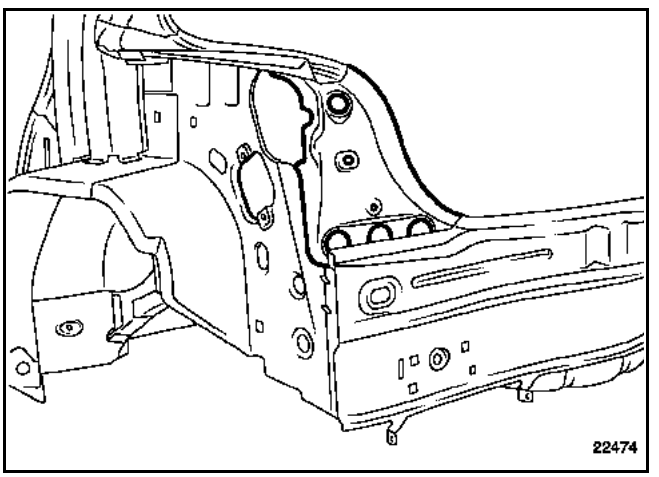

GETtheMANUALS.org

The replacement of this part is a basic operation for a rear impact.

The door is a removable component.

In the operation described below, there are only descriptions of the connections specific to the part concerned.

The information on the additional parts will be dealt with in their respective chapters (refer to contents).

NOTE:
The part supplied by the Parts Store is black and does not need painting when fitted.

COMPOSITION OF THE REPLACEMENT PART

Part supplied with:
Rear end cross member
Shock absorber housing
Housing mounting
Towing hitch tapped ring
Bracket reinforcement
Flanges

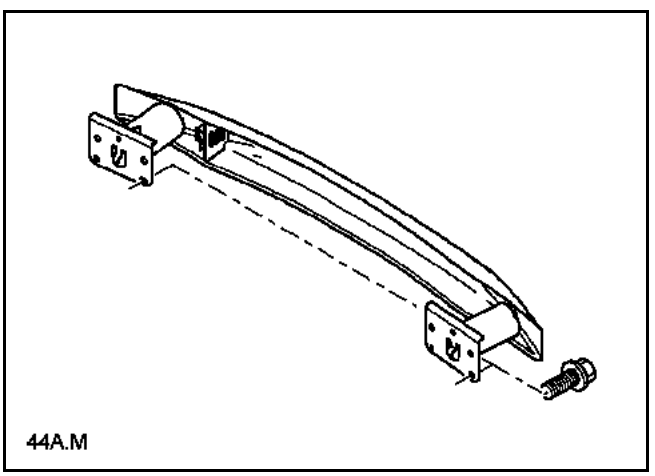

TIGHTENING TORQUE (in daNm)	
Cross member bolt A	4.2

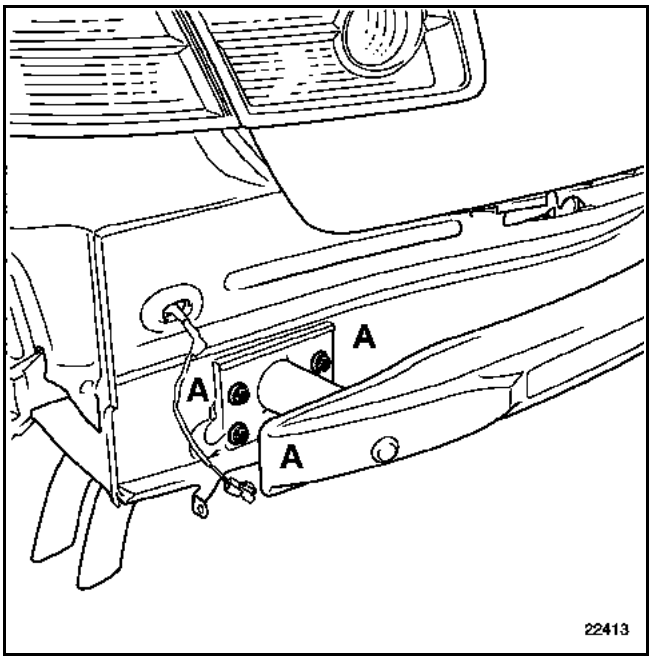

REMOVAL
Removal is by means of side mounting bolts (A) (three on each side).

REFITTING

IMPORTANT: the crossmember contributes to the rigidity of the structure. Therefore, after carrying out any work on it is essential to adhere to the tightening torques.

GETtheMANUALS.org

Replacing this part is a basic operation.

In the procedure described below, you will find only the descriptions and the joints which are specific to the part concerned.

The information on the additional parts will be dealt with in their corresponding sections (refer to contents).

NOTE: this operation raises no particular difficulties.

Where spot welds cannot be made with the electric spot welder, they can be replaced by plug welds.

Bonds must be made using setting adhesive: **M. J. Pro (part number: 77 11 172 676).**

COMPOSITION OF THE PART FROM THE PARTS DEPARTMENT

Part supplied on its own.

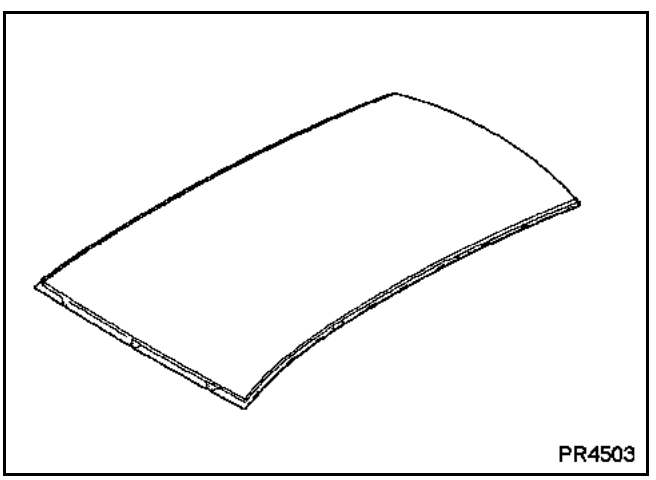

PARTS CONCERNED (thickness in mm):

1	Roof	0.9
2	Roof rear cross member	1

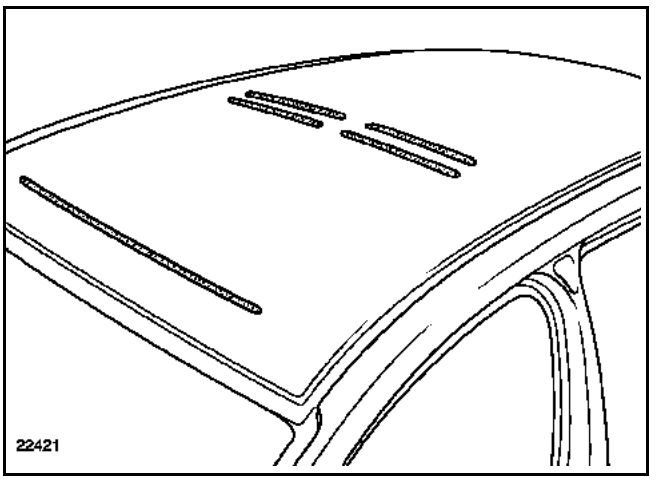

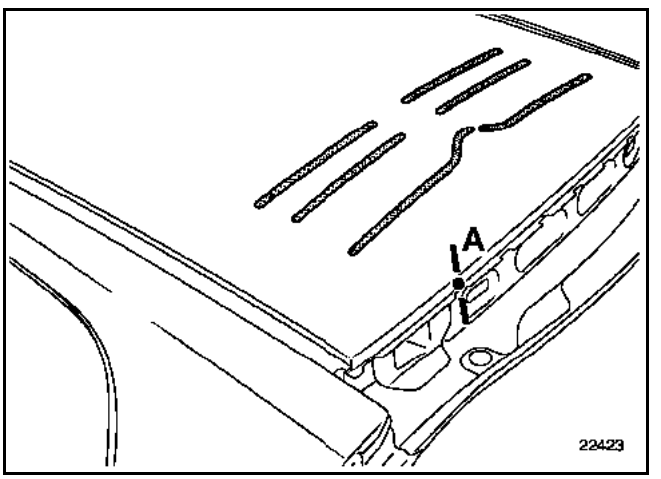

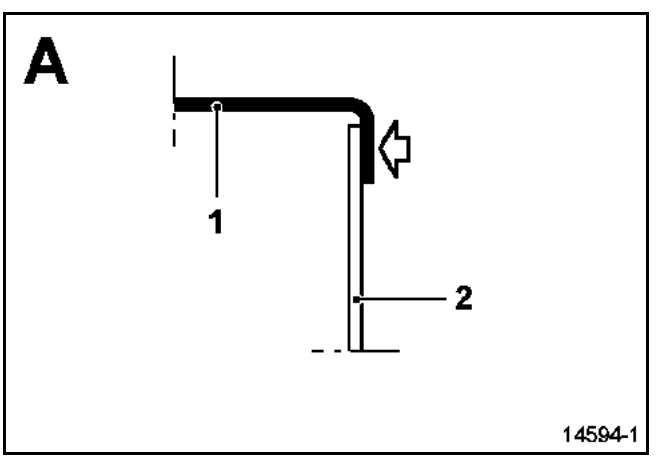

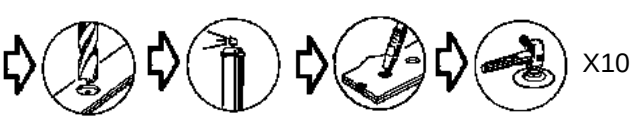

GETtheMANUALS.org

Adaptation for versions with aerials

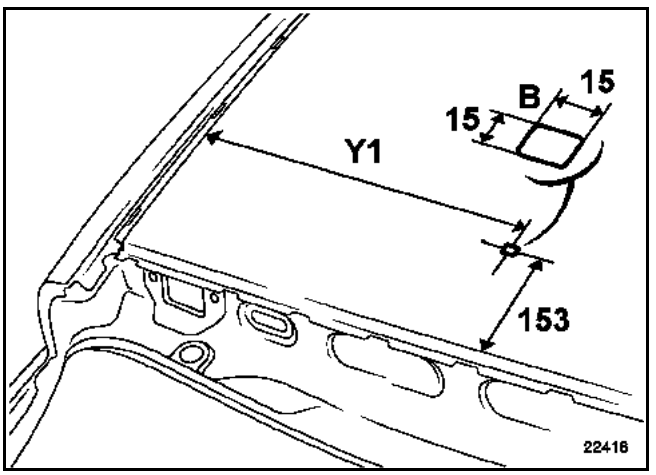

NOTE: for reasons of standardisation, the Parts Department supplies only roofs without pre-drilled holes.

Therefore, for the aerial version it is neccessary to:

1 Either make a square slot (B) following the dimensions marked on the diagram.
Y1 = 497 mm (the length of each side must be the same).

2 Or make only one hole.

IMPORTANT: in the second method, the joint must be sealed with mastic filler before final fitting of the aerial, (refer to **Technical Note no. 396A**).

REMINDER: anti-corrosion protection is vital for all operations which expose the bare metal of the bodywork.

Protect against corrosion by applying the following products:

Pre-treatment primer	**77 01 423 933**
Reactive thinner	**77 01 423 955**

GETtheMANUALS.org

The replacement of this part is a complementary operation to the replacement of the roof.

It is part of the process of the first method (see introduction **section 40A-C "Description of parts"**).

For information purposes, there is a diagram of the part fitted to the vehicle in the procedure.

The information on the additional parts will be dealt with in their respective sections (refer to contents).

NOTE: there is no specific procedure for replacing this part, and joints can all be made as originally.

COMPOSITION OF THE PART FROM THE PARTS DEPARTMENT

Assembled part with:
Cross member closure panel

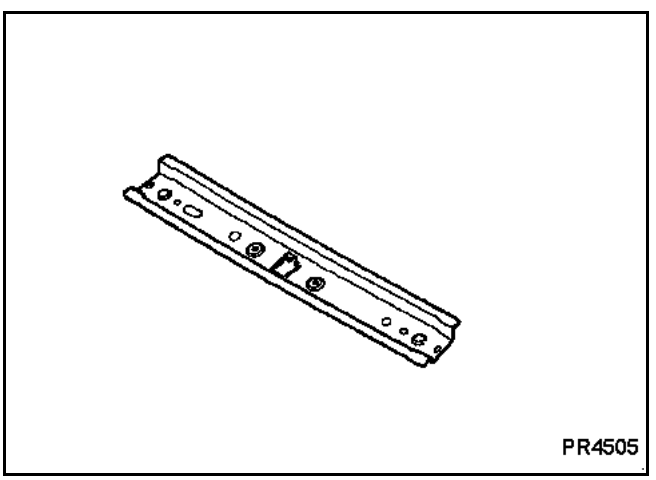

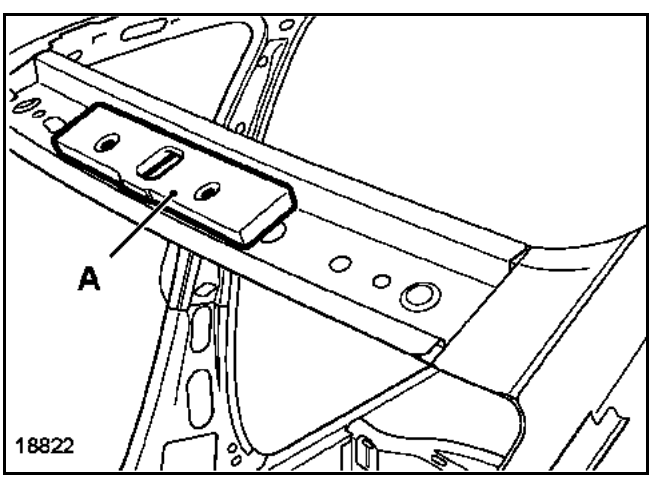

WARNING: sound insulation (A) must be fitted before the roof is refitted.

GETtheMANUALS.org

The replacement of this part is a complementary operation to the replacement of the roof.

For information purposes, there is a diagram of the part fitted to the vehicle in the procedure.

The information on the additional parts will be dealt with in their corresponding sections (refer to contents).

NOTE: there is no specific procedure for replacing this part, and joints can all be made as originally.

COMPOSITION OF THE PART FROM THE PARTS DEPARTMENT

Assembled part with:
Cross member closure panel

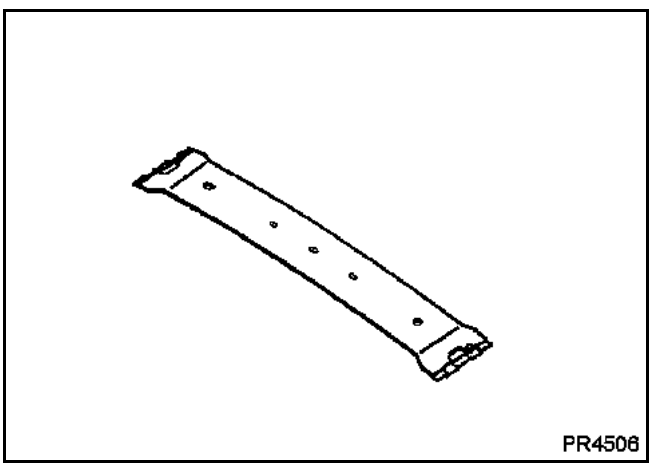

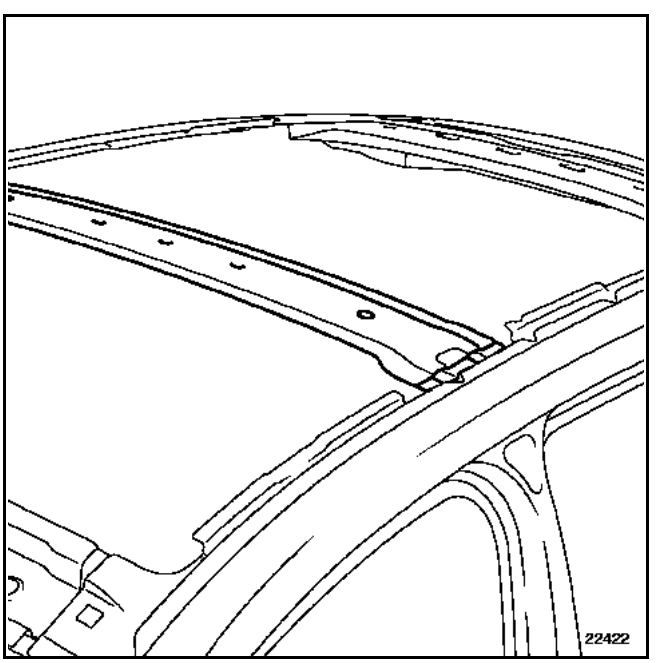

GETtheMANUALS.org

The replacement of this part is a complementary operation to the replacement of the roof.

For information purposes, there is a diagram of the part fitted to the vehicle in the procedure.

The information on the additional parts will be dealt with in their corresponding sections (refer to contents).

NOTE: there is no specific procedure for replacing this part, and joints can all be made as originally.

COMPOSITION OF THE PART FROM THE PARTS DEPARTMENT

Assembled piece with arch closure panel.

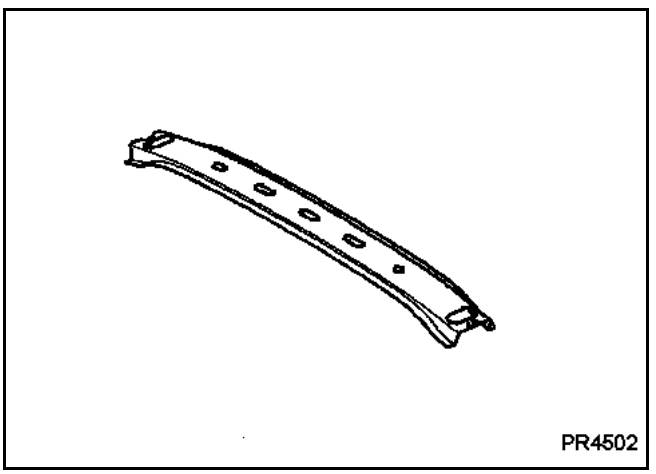

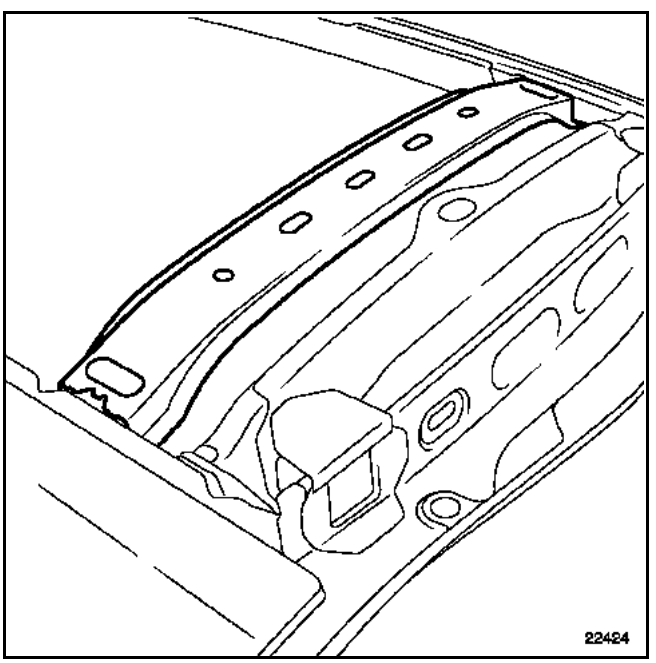

GETtheMANUALS.org

The replacement of this part is a complementary operation to the replacement of the roof.

For information purposes, there are two diagrams of the part fitted to the vehicle in the procedure.

The information on the additional parts will be dealt with in their corresponding sections (refer to contents).

NOTE: there is no specific procedure for replacing this part, and joints can all be made as originally.

COMPOSITION OF THE PART FROM THE PARTS DEPARTMENT

Part assembled with:
Casing closure panel components
Casings
Cross member
Tailgate hinge mounting brackets
Crimped nuts

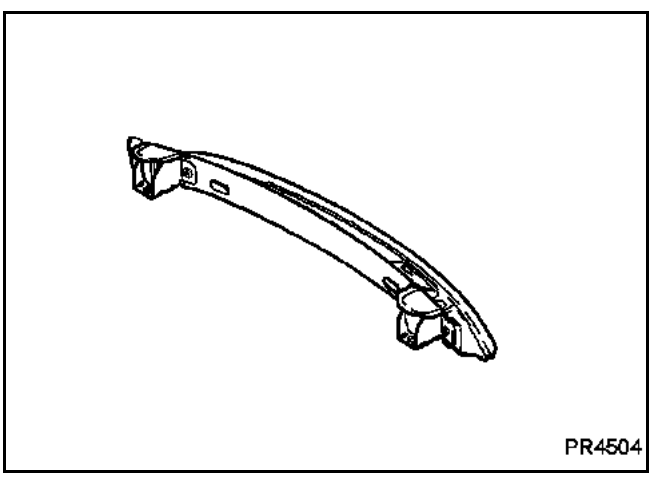

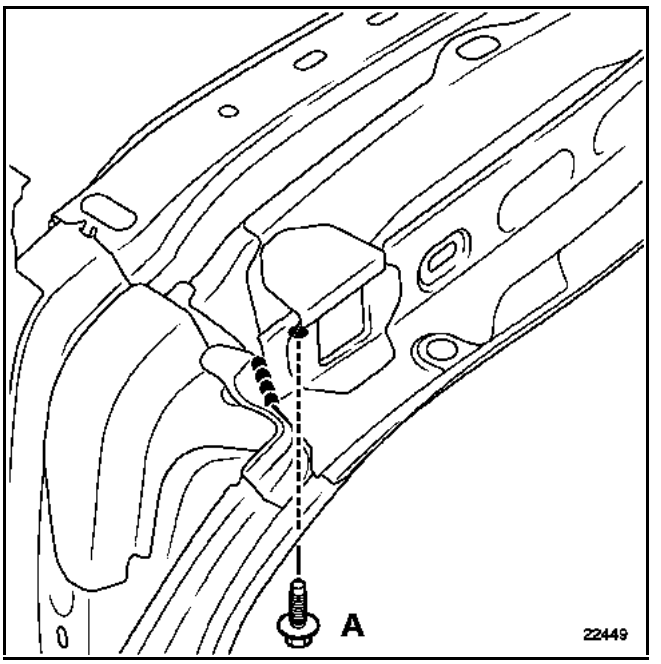

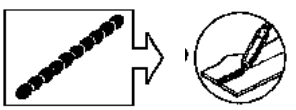

NOTE: the bead is applied to both sides.

Remove lower mounting bolts (A) from each side.

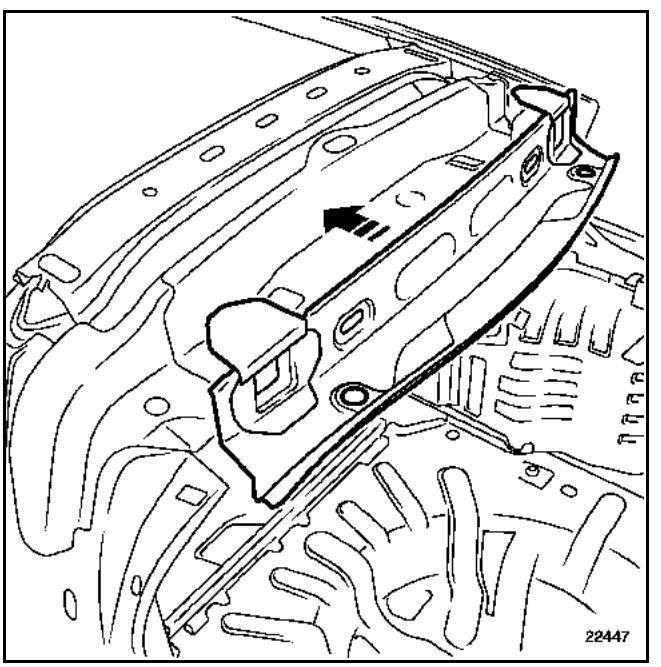

GETtheMANUALS.org

The replacement of this part is a complementary operation to the replacement of the roof.

The information on the additional parts will be dealt with in their corresponding sections (refer to contents).

NOTE: there is no specific procedure for replacing this part, and joints can all be made as originally.

For information purposes, there is a diagram of the part fitted to the vehicle in the procedure.

COMPOSITION OF THE PART FROM THE PARTS DEPARTMENT

Assembled part.

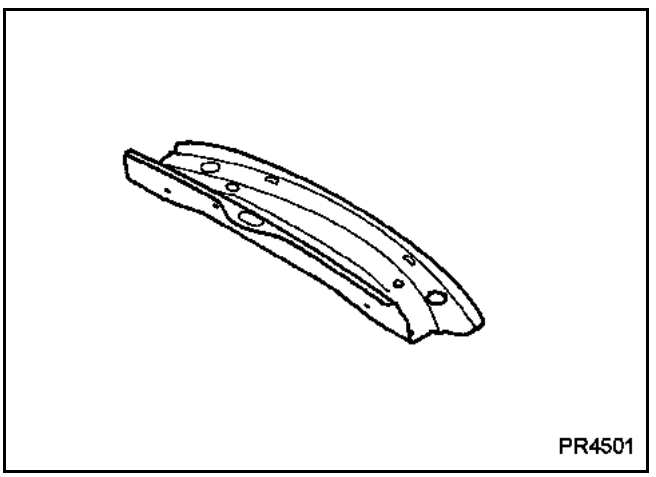

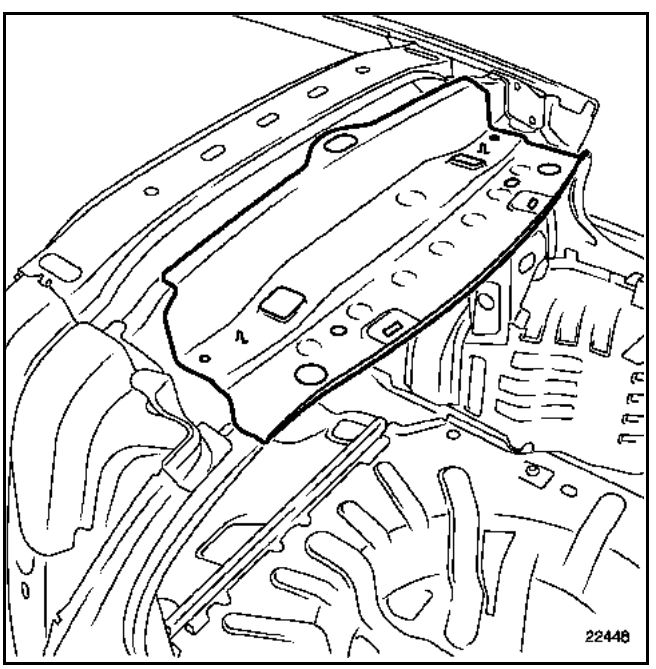

GETtheMANUALS.org

The replacement of this part is a basic operation for a side impact.

It is a removable aluminium structural component.

Information on dismantling or additional parts is dealt with in their respective sections.

NOTE: The removal/refitting operations present no specific problems and only the adjustment options are described in the procedure.

All clearances are given in **section 40A-E**.

To repair the aluminium, refer to
Technical Note 527A.

REMINDER:
Use only tools, abrasive discs and abrasives designed for repairing aluminium, to avoid any contamination by steel particles, which would cause galvanic corrosion.
The sensor and filtration systems must be adapted to the aluminium and must never be contaminated, even slightly, by steel dust.

COMPOSITION OF THE REPLACEMENT PART

Part supplied whole with its soundproofing plates.

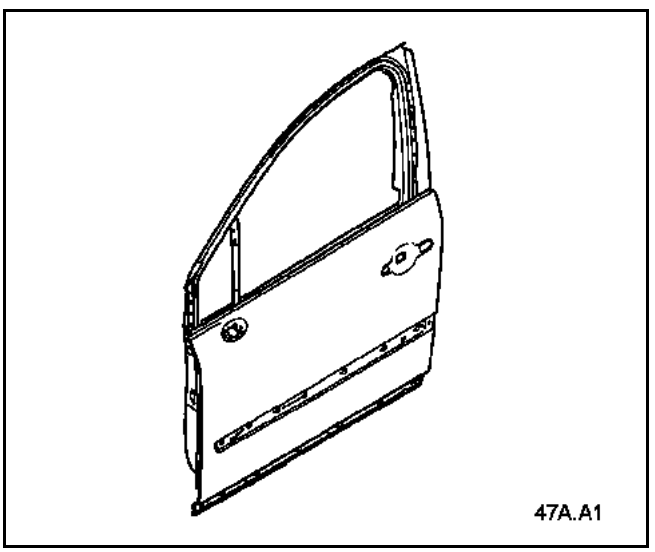

ADJUSTMENT ZONES

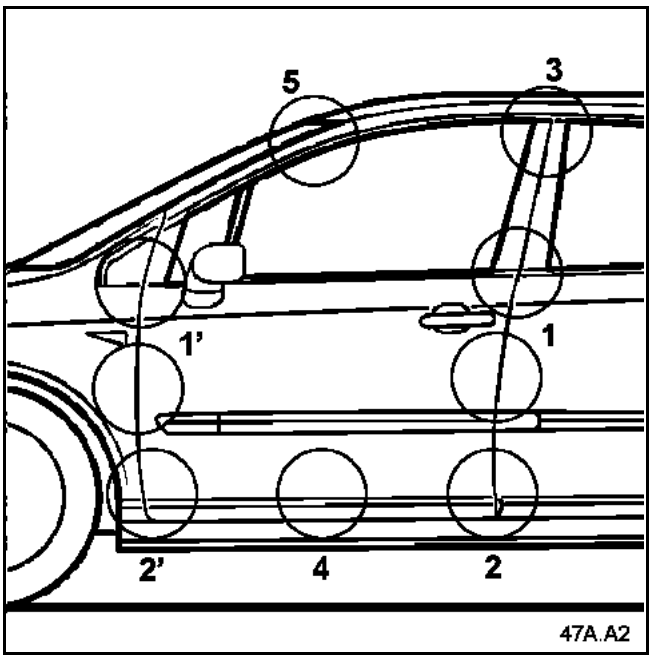

1. FITTING THE DOOR

This operation can be carried out single-handed using the door mounting tool.
Renault approval no.: **661000**
Supplier: **Z INTERNATIONAL**
Part Number: **SUP01**
otherwise two people are needed to put the door in place.

REMINDER: before final refitting, the area between the A-pillar and the hinges must be sealed again with mastic (refer to **technical note n° 396A**).

Finger tighten all mountings without tightening them.

Fit all the parts to the door

Remove the striker before adjusting the hinges.

GETtheMANUALS.org

2. SETTINGS

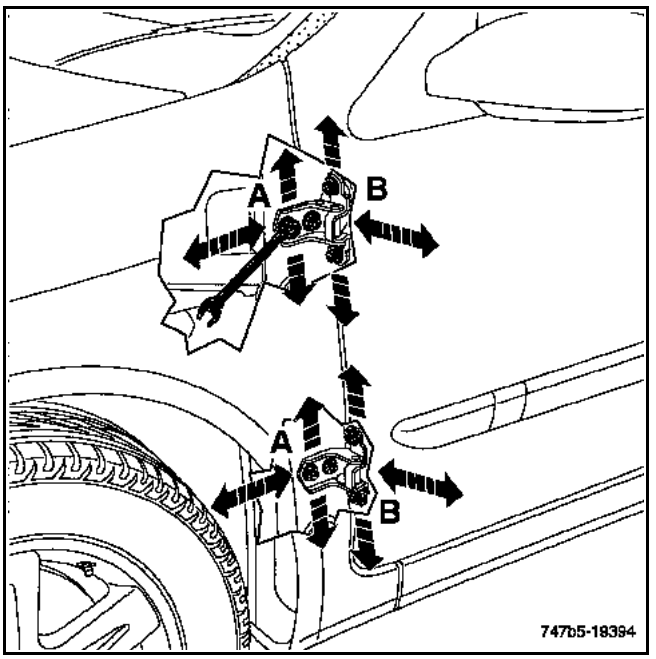

All door gap adjustments (zones 1 to 5, see introduction) are made using the hinge mounting bolts (A) and (B).

REMINDER: front to back adjustment (**OX**) of the door is performed using only hinge mounting bolts (A) on the A-pillar.

Check the adjustments and tighten in position.

NOTE: the hinge mountings on the pillar can be accessed with a flat spanner after removing the front wheel arch liner.

Special note on the upper hinge:

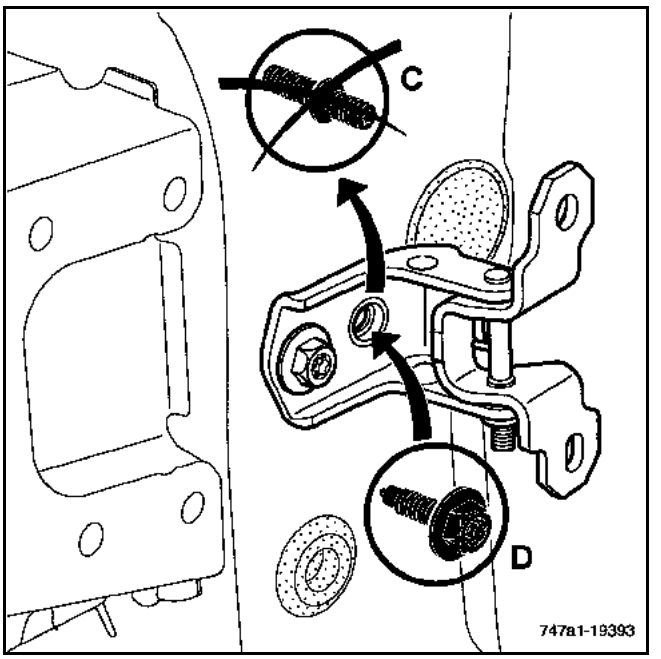

To allow the opening element to be replaced during repair, it is necessary to replace the original indexing bolts (C) with a special After Sales bolt (D) part no.: **77 03 002 296**.

To adjust the door clearance (**OY**), the hinge holes on the door box section side can be counter-drilled to **∅ 12 mm** if necessary.

REMINDER: anti-corrosion protection is vital for all operations which expose the bare metal of the bodywork.

Protect against corrosion by applying the following products:

Pre-treatment primer	**77 01 423 933**
Reactive thinner	**77 01 423 955**

NOTE: after sales hinges are delivered with square slots which allow adjustment to be carried out.

GETtheMANUALS.org

Special notes on the striker plate

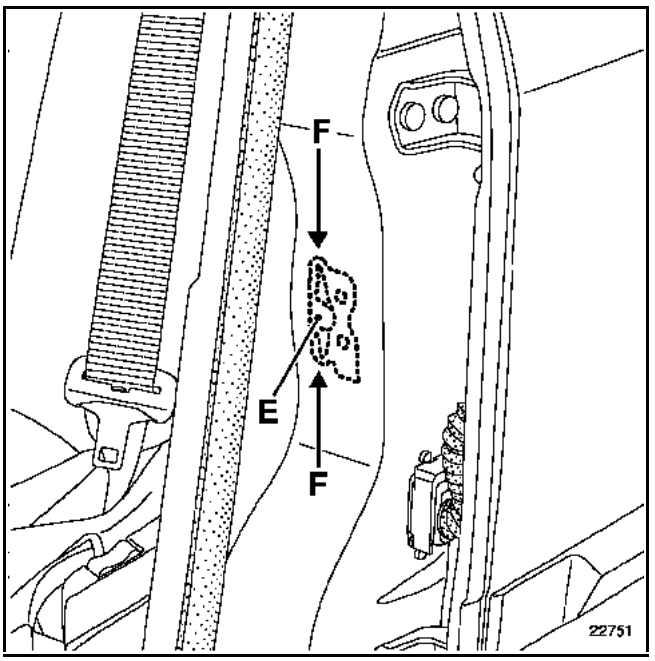

The striker plate is welded at point (E) on the reinforcement inside the B-pillar.

To carry out adjustments, it is necessary to bend the fuse sections (F) of the plate.

This operation can only be performed by exerting a relatively strong force on the striker (e.g. by using a hammer.

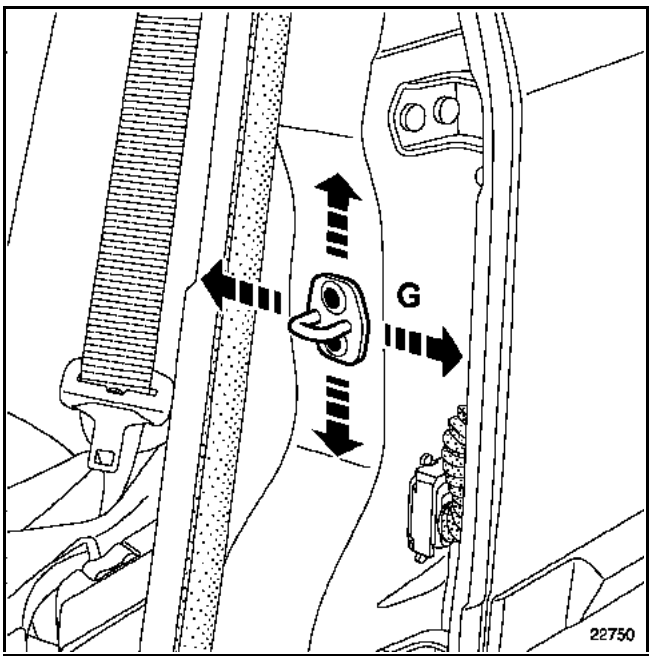

This operation consists of adjusting the flushness, beading and firmness of closure.

To do this, untighten the screws (G) and move the striker, following the direction of the arrows.

Check the adjustment and tighten the door in position.

GETtheMANUALS.org

3 PASSIVE SAFETY

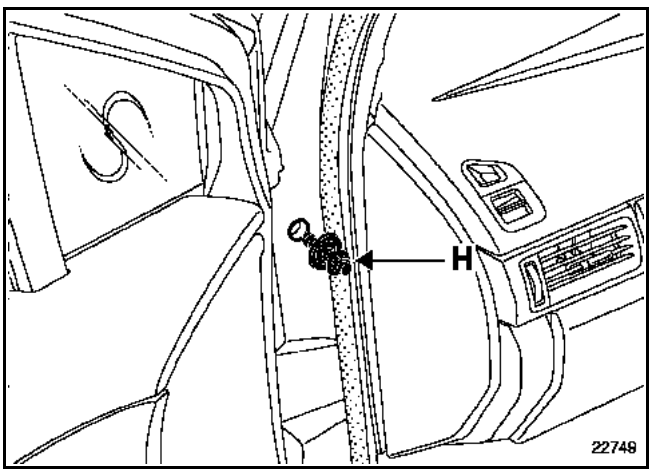

IMPORTANT: at the end of the operation, check the presence and condition of the door-retention device (H).

REMINDER: the function of this part is essential in the event of frontal impact. the door-retention device keeps the door in its longitudinal plane, thereby absorbing impact energy efficiently.

TIGHTENING TORQUE (in daNm)	
Door-retention device bolts	**0.8**

GETtheMANUALS.org

The replacement of this part is a basic operation for a side impact.

Information on dismantling or additional parts is dealt with in their respective sections.

It is an aluminium structural component.

To repair the aluminium, refer to
Technical Note 527A.

REMINDER:
Use only tools, abrasive discs and abrasives designed for repairing aluminium to avoid any contamination by steel particles, which would cause galvanic corrosion.
The sensor and filtration systems must be adapted to the aluminium and must never be contaminated, even slightly, by steel dust.

COMPOSITION OF THE REPLACEMENT PART

Part supplied with:
Upper reinforcement
Panel stiffener
Soundproofing plates
Handle reinforcement
Rivets
Pre-formed mastic

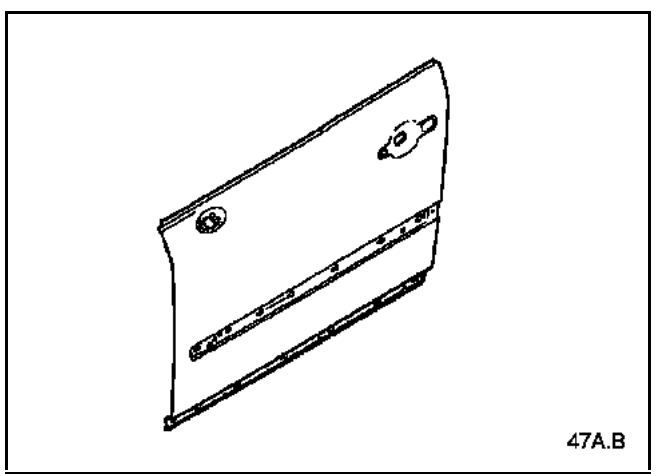
47A.B

PARTS CONCERNED (thickness in mm):

1	Door panel	1.1
2	Door box section	1.2
3	Panel stiffener	2

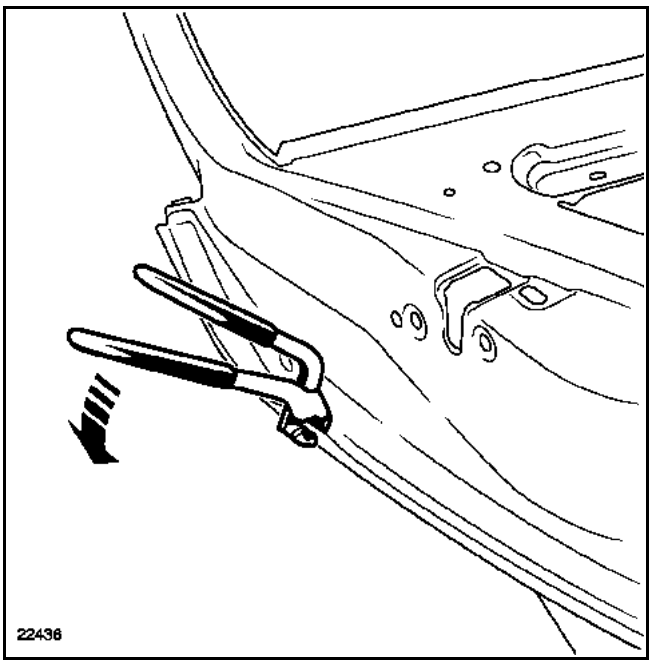
22436

IMPORTANT: the door panel should be removed with the special uncrimping tool part no.: **CAR. 1657**.

It is forbidden to use the angle grinder in the absence of sensor and filtration systems which are not adapted to aluminium.

GETtheMANUALS.org

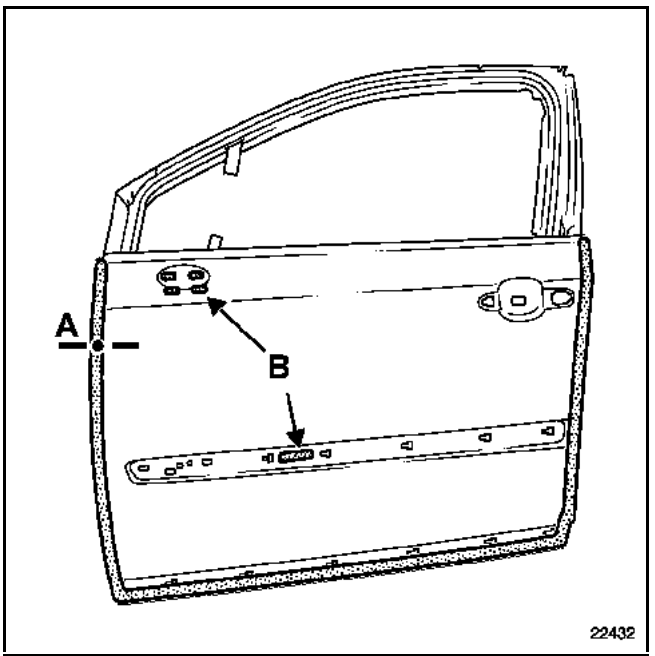

NOTE: it is necessary to use a bi-composite structural adhesive designed for aluminium on the edge (crimping zone), **part no.: 77 11 219 885.**

For zones (B), use a setting adhesive type **MJPro** (**part no.: 77 11 172 376**).

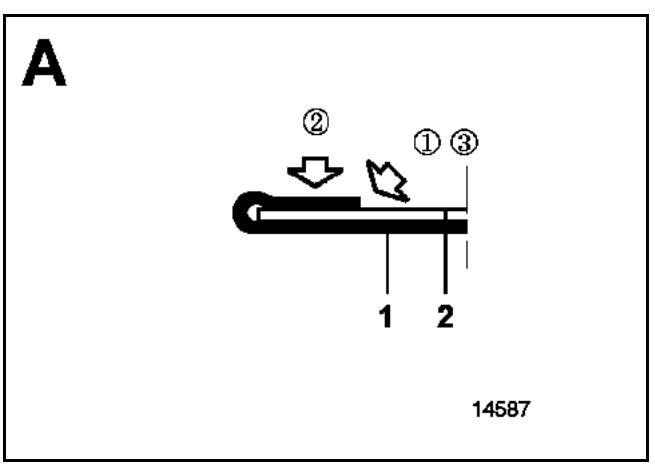

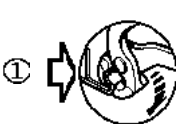

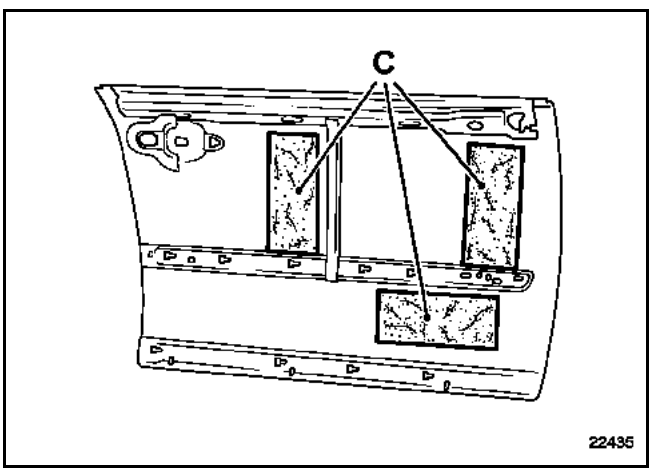

IMPORTANT: ensure that panel soundproofing plates are fitted (C).

If it is necessary to even partially remove one or more soundproofing plates, they should be systematically replaced.

For information, the dimensions of the plates (C) are **130 x 300 mm.**

GETtheMANUALS.org

The replacement of this part is a basic operation for a side impact.

It is a removable aluminium structural component.

Information on dismantling or additional parts is dealt with in their respective sections.

NOTE: The removal/refitting operations present no specific problems and only the adjustment options are described in the procedure.

All clearances are given in **section 40A-E**.

To repair the aluminium, refer to
Technical Note 527A.

REMINDER:
Use only tools, abrasive discs and abrasives designed for repairing aluminium, to avoid any contamination by steel particles, which would cause galvanic corrosion.
The sensor and filtration systems must be adapted to the aluminium and must never be contaminated, even slightly, by steel dust.

COMPOSITION OF THE REPLACEMENT PART

Part supplied whole with its soundproofing plates.

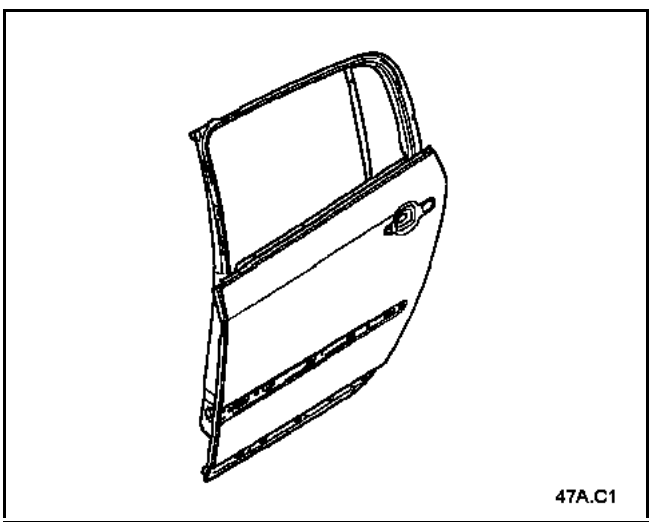

ADJUSTMENT ZONES

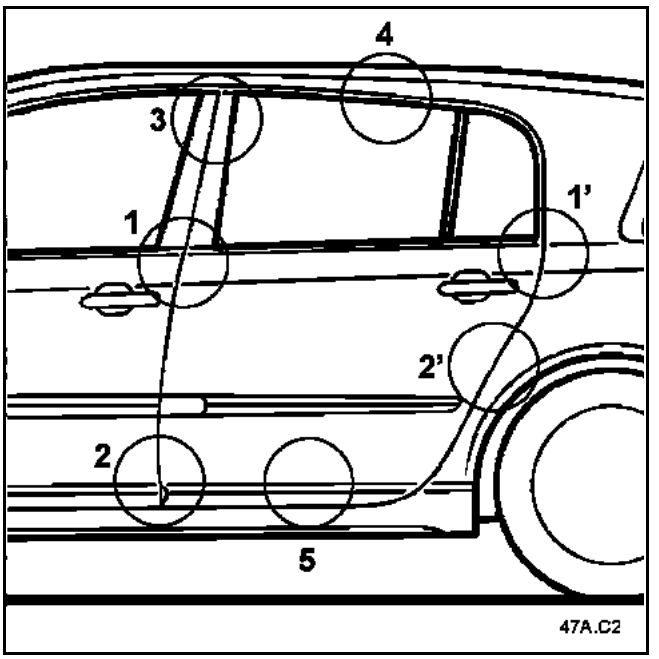

1.FITTING THE DOOR

This operation can be carried out single-handed using the door mounting tool.
Renault approval no.: **661000**
Supplier: **Z INTERNATIONAL**
Part Number: **SUP01**
otherwise two people are needed to put the door in place.

REMINDER: before final refitting, the area between the A-pillar and the hinges must be sealed with mastic (refer to **Technical Note n° 396A**).

Finger tighten all mountings without tightening them.

Fit all the parts to the door.

Remove the striker before adjusting the hinges.

GETtheMANUALS.org

2. SETTINGS

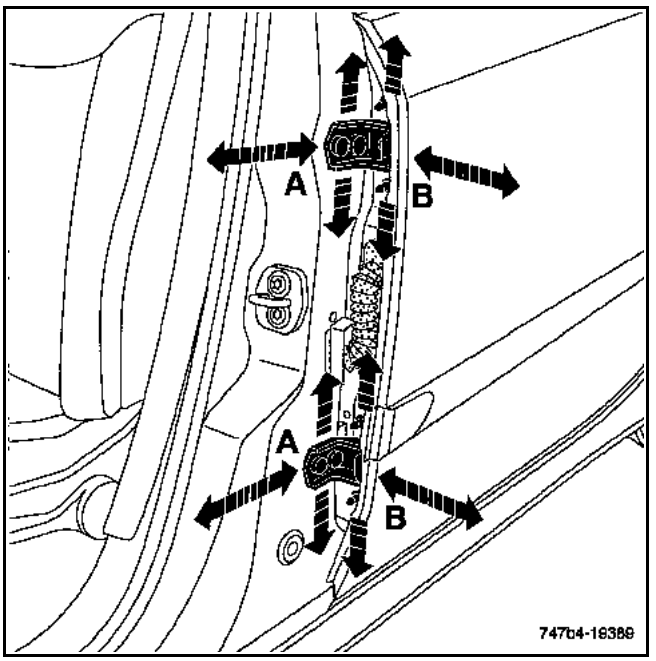

All door gap adjustments (zones 1 to 5, see introduction) are made using the hinge mounting bolts (A) and (B).

REMINDER: front to back adjustment (**OX**) of the door is made using only hinge mounting bolts (A) on the B-pillar.

To adjust the upper hinge, the holes on the B-pillar can be counter-drilled to ∅ **12 mm**.

REMINDER: anti-corrosion protection is vital for all operations which expose the bare metal of the bodywork.

Protect against corrosion by applying the following products:

Pre-treatment primer	**77 01 423 933**
Reactive thinner	**77 01 423 955**

Check the adjustments and tighten in position.

NOTE: it is necessary to first remove the lower lining of the pillar to access the hinge mountings on the pillar.

The pillar-side hinge mountings can be accessed from inside the vehicle.

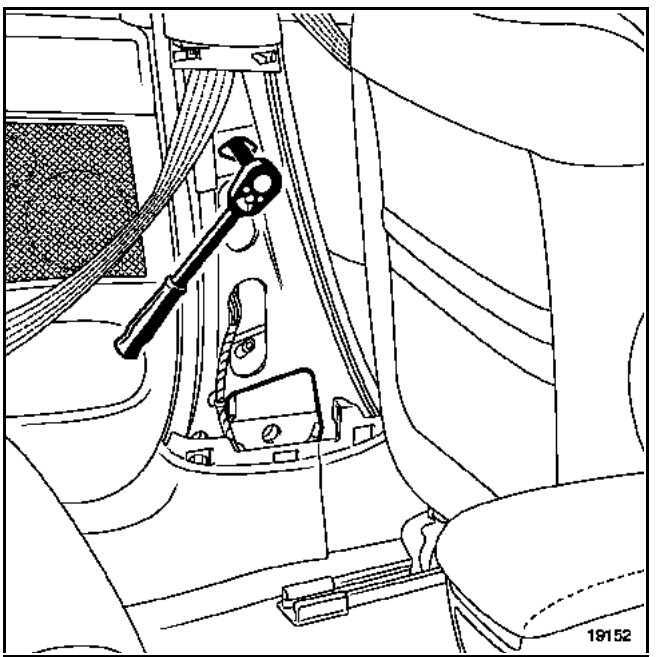

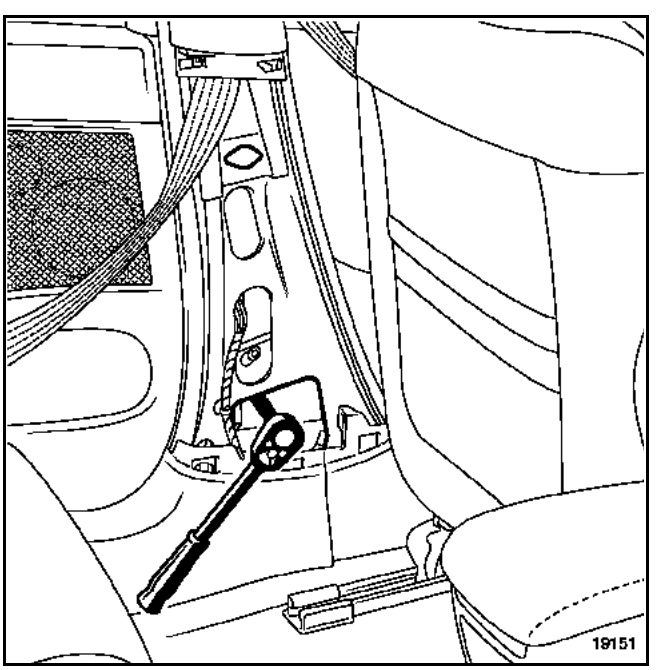

To adjust the door clearance (**OY**), the hinge holes on the door box section side can be counter-drilled to ∅ **12 mm** if necessary.

NOTE: after sales hinges are delivered with square holes for adjustment.

GETtheMANUALS.org

Special notes on the striker plate

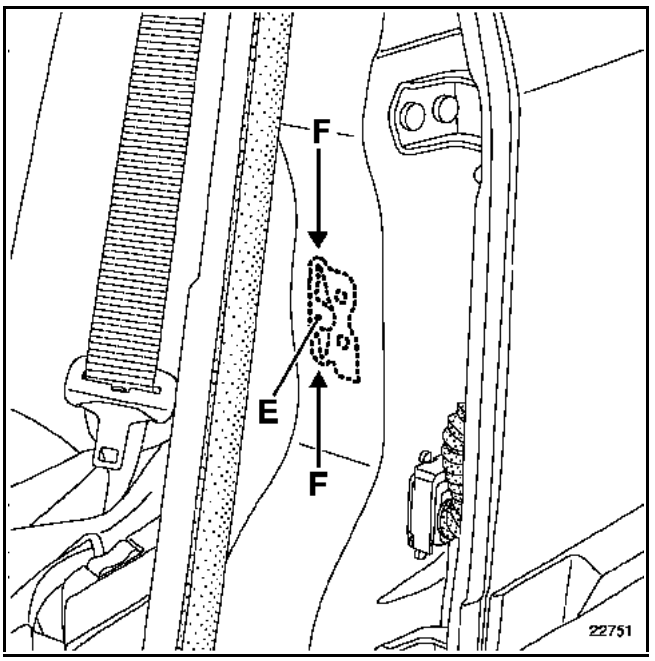

The striker plate is welded at point (E) on the reinforcement inside the B-pillar.

To carry out adjustments, it is necessary to bend the fuse sections (F) of the plate.

This operation can only be performed by exerting a relatively strong force on the striker (e.g. by using a hammer.

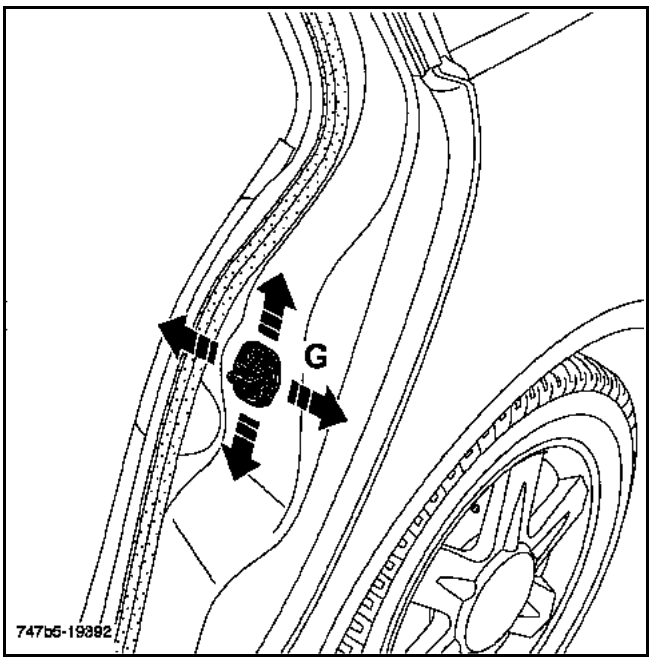

This operation consists of adjusting the flushness, beading and firmness of closure.

To do this, untighten the screws (G) and move the striker, following the direction of the arrows.

Check the adjustment and tighten the door in position.

GETtheMANUALS.org

The replacement of this part is a basic operation for a side impact.

Information on dismantling or additional parts is dealt with in their respective sections.

It is a removable aluminium structural component.

To repair the aluminium, refer to
Technical Note 527A.

REMINDER:
Use only tools, abrasive discs and abrasives designed for repairing aluminium, to avoid any contamination by steel particles, which would cause galvanic corrosion.
The sensor and filtration systems must be adapted to the aluminium and must never be contaminated, even slightly, by steel dust.

COMPOSITION OF THE REPLACEMENT PART

Part supplied with:
Upper reinforcement
Panel stiffener
Shock absorbers
Opening control reinforcement
Rivets
Pre-formed mastic

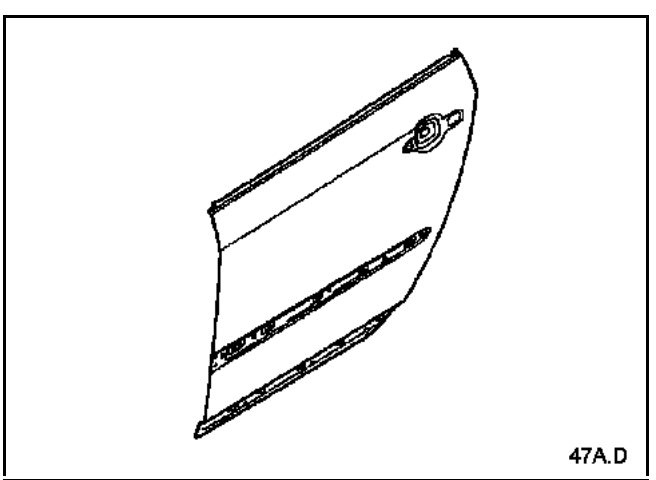

PARTS CONCERNED (thickness in mm):

1 Door panel	1.1
2 Door box section	1.2

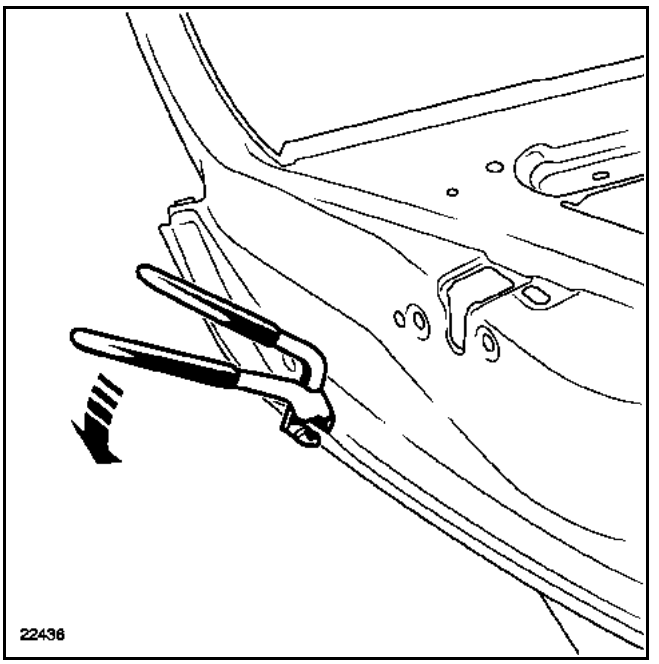

IMPORTANT: the door panel should only be removed with the special uncrimping tool part no.: **CAR. 1657**.

It is forbidden to use the angle grinder in the absence of sensor and filtration systems which are not adapted to aluminium.

GETtheMANUALS.org

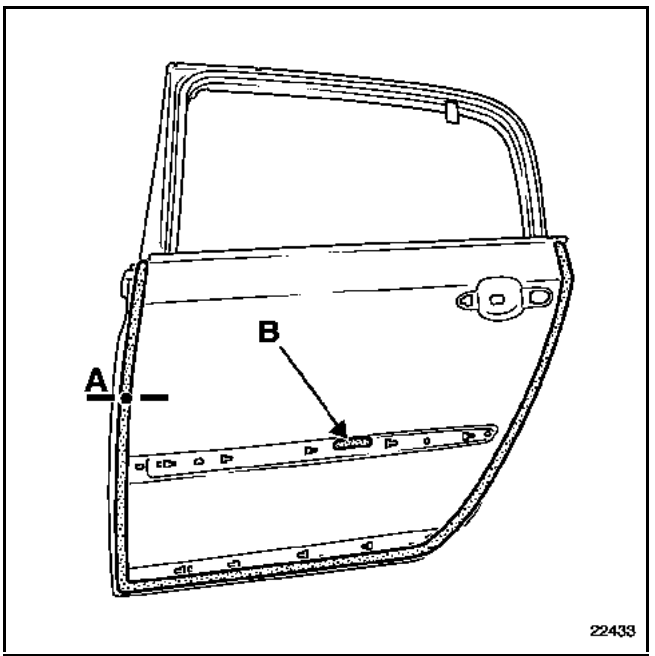

NOTE: it is necessary to use a bi-composite structural adhesive designed for aluminium on the edge (crimping zone), **part no.: 77 11 219 885.**

For zone (B), use a setting adhesive type **MJPro** (**part no.: 77 11 172 376**).

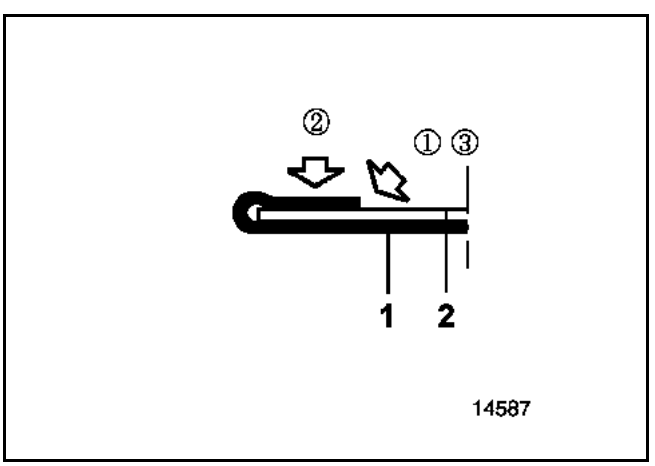

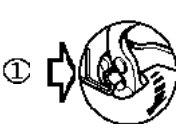

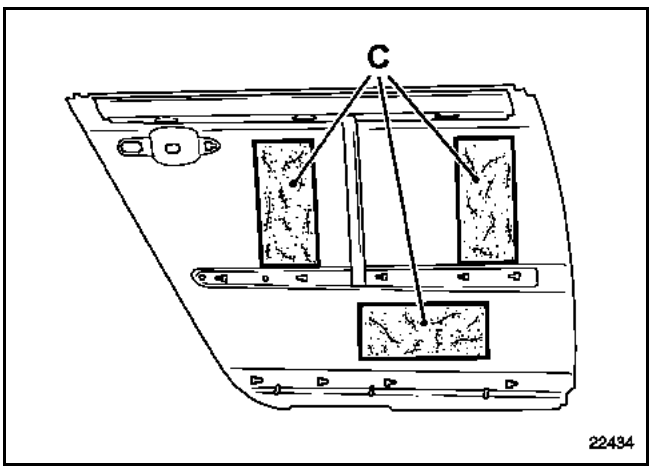

IMPORTANT: ensure that panel soundproofing plates are fitted (C).

If it is necessary to even partially remove one or more soundproofing plates, they should be systematically replaced.

For information, the dimensions of the plates (C) are: **130 x 300 mm.**

GETtheMANUALS.org

The replacement of this part is a basic operation for a rear side collision.

In the procedure described below, you will only find descriptions of the connections which are specific to the part concerned.

Information on dismantling or additional parts is dealt with in their respective sections (see summary).

It is a removable plastic component.

COMPOSITION OF THE REPLACEMENT PART

Part supplied on its own (pre-primed).

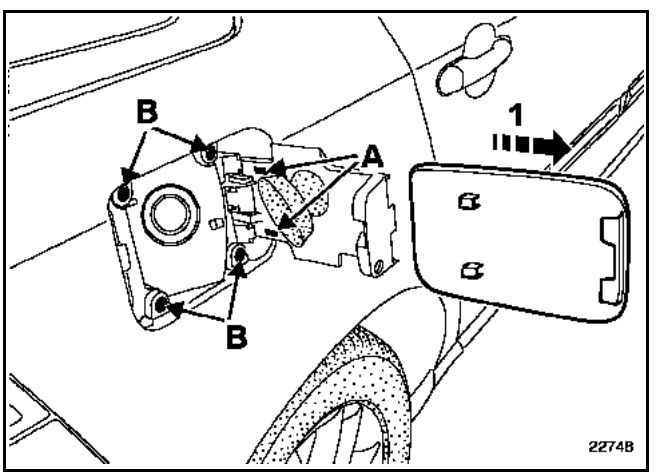

REMOVAL

Apply pressure with your fingers to release the two clips (A).

Pull the filler flap outwards (arrow **1**).

REFITTING

Proceed in the reverse order to removal.

NOTE: the aperture clearances are adjusted with the filler neck screws (B).

REPAIR

The filler flap is made of NORYL GTX, for paint products refer to **technical note 473A.**

GETtheMANUALS.org

The replacement of this part is a basic operation for a frontal impact.

Information on additional parts or stripping of parts is dealt with in the relevant sections.

It is a removable aluminium component.

NOTE: The removal/refitting operations present no specific problems and only the adjustment options are described in the procedure.

All clearances are shown in **Section 40A-E**.

For repair of aluminium components refer to **Technical Note 527A.**

REMINDER:
To avoid contaminating the aluminium with steel particles which could lead to bimetallic corrosion, use only tools abrasive disks, or abrasives reserved specifically for repairing aluminium. The separator and filtration systems must be specifically for aluminium and should never be contaminated even in small quantities, by steel particles.

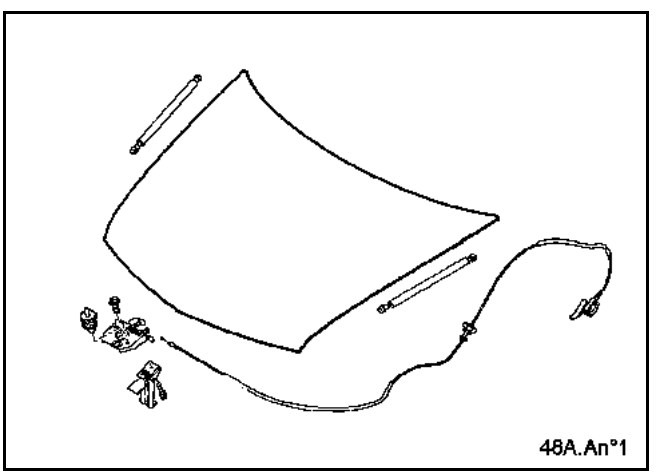
48A.An°1

WARNING: It will be necessary to first remove the scuttle panel grille, to access the bonnet hinge lower mountings.

ADJUSTMENT ZONES

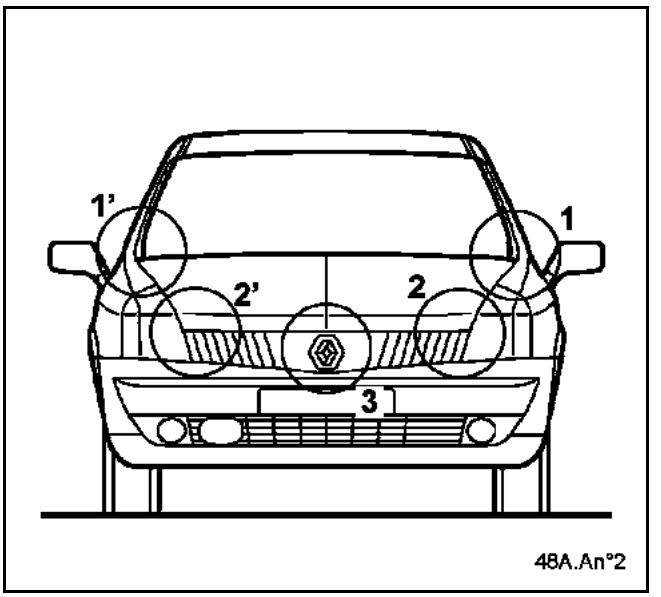

48A.An°2

1. FITTING THE ELEMENT

REMINDER: before final refitting, the seal must be made between the cowl side panel and the hinges with mastic (refer to **Technical Note no. 396A**).

Finger tighten all mountings without locking them.

Attach all the bonnet components.

Remove the bonnet catch before starting adjustment.

GETtheMANUALS.org

2. ADJUSTMENTS

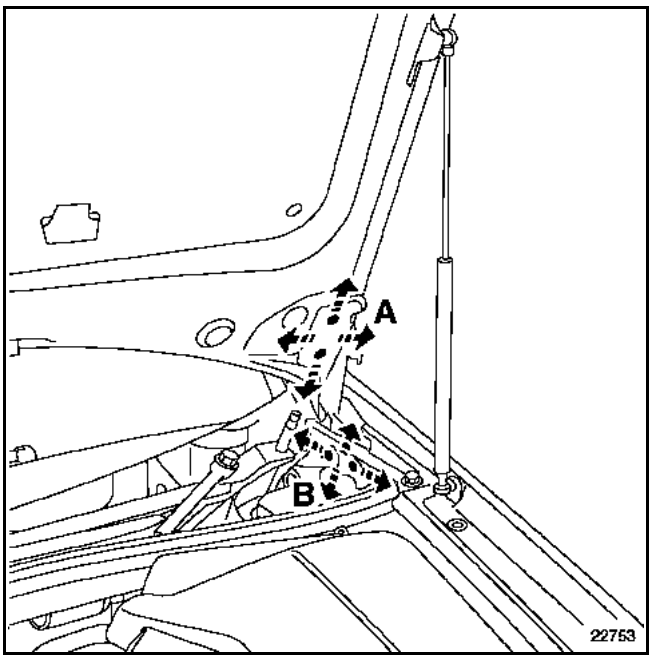

All bonnet gap adjustments (zones 1 to 3, see introduction) are carried out on the bonnet hinge mounting bolts (A) and (B).

NOTE: the height adjustment (**OZ**) of the rear section of the bonnet is performed using the bonnet hinge mounting screws on the cowl panel.

REMINDER: Always begin by adjusting the bonnet hinge supports on the car body.

NOTE: to gain access to the bonnet hinge lower mountings (B) the scuttle panel grille needs to be removed.

Check the adjustments and tighten in position.

During this repair it is possible to adjust the front wings if required.

To carry out clearance adjustment on the door (**OY**), it is possible to counter drill the original ∅ **12 mm** hinge holes.

REMINDER: anti-corrosion protection is vital for all operations which expose the bare metal of the bodywork.

Protect against corrosion by applying the following products:

Pre-treatment primer	**77 01 423 933**
Reactive thinner	**77 01 423 955**

NOTE: after sales hinges are fitted with square holes enabling adjustment.

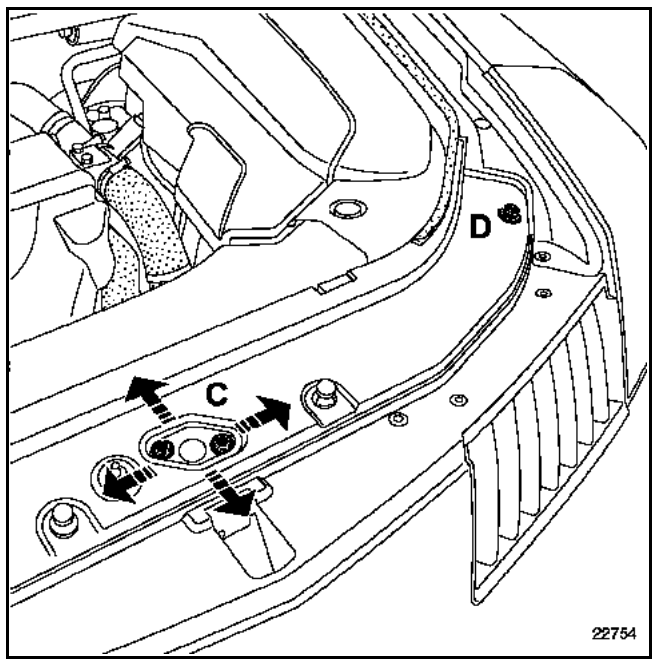

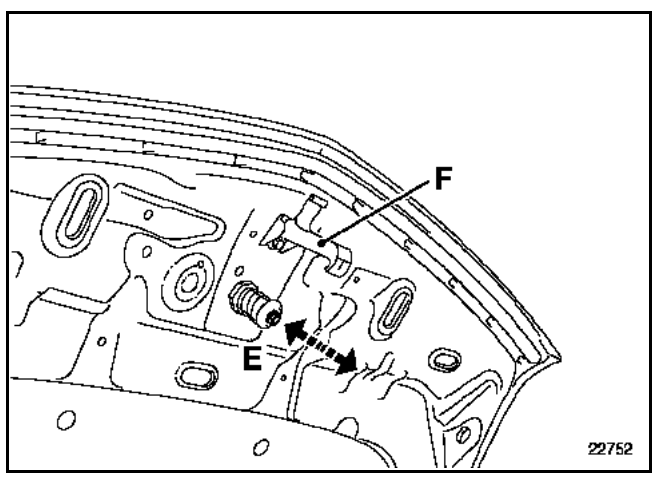

Check the front section of the bonnet is fitted correctly with the stops (D).

Refit the bonnet catch (E)

The removal of suspension and the adjustment of the closure length is carried out by the bonnet catch (E) and the lock (C).

GETtheMANUALS.org

Check the adjustment and the correct operation of the bonnet then lock the door in position.

IMPORTANT:
Do not forget to refit the safety hook (F).
When closed, the bonnet should rest on the stops (D).

GETtheMANUALS.org

The replacement of this part is a basic operation for a rear impact.

Information on additional parts or stripping is dealt with in the relevant sections.

It is a removable part made from sheet moulded polyester (SMC type).

NOTE: The removal/refitting operations present no specific problems and only the adjustment options are described in the procedure.

All clearances are shown in **Section 40A-E**.

REPAIR
For repairing the box section external panel refer to Workshop Repair Manual **502.**

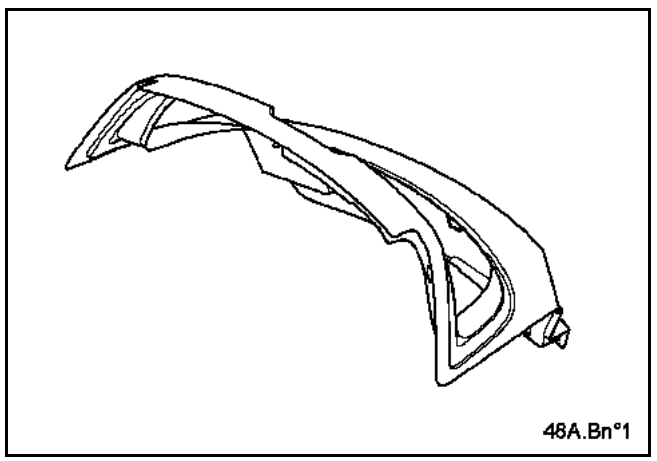

OPENING DURING A FAULT

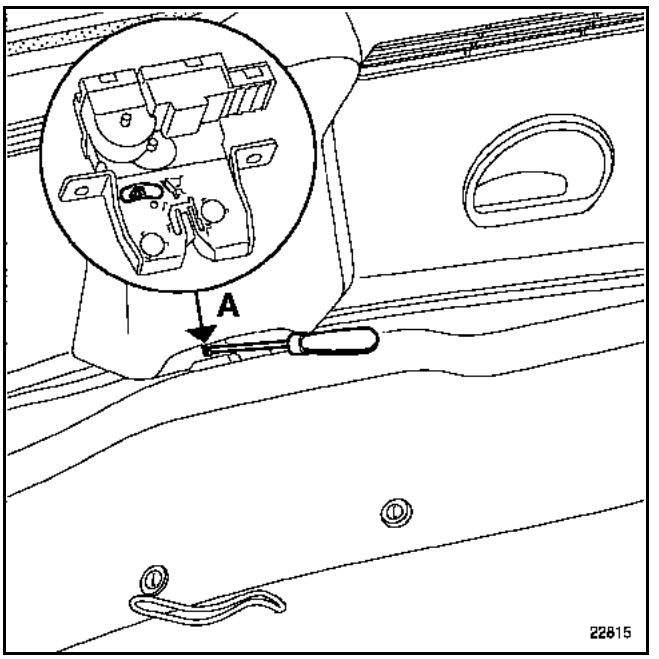

REMINDER: it is possible during an electrical fault, to open the tailgate manually.

Unscrew the tailgate lock using a screwdriver and pushing on catch (A).

This operation is carried out from inside the vehicle.

GETtheMANUALS.org

ADJUSTMENT ZONES

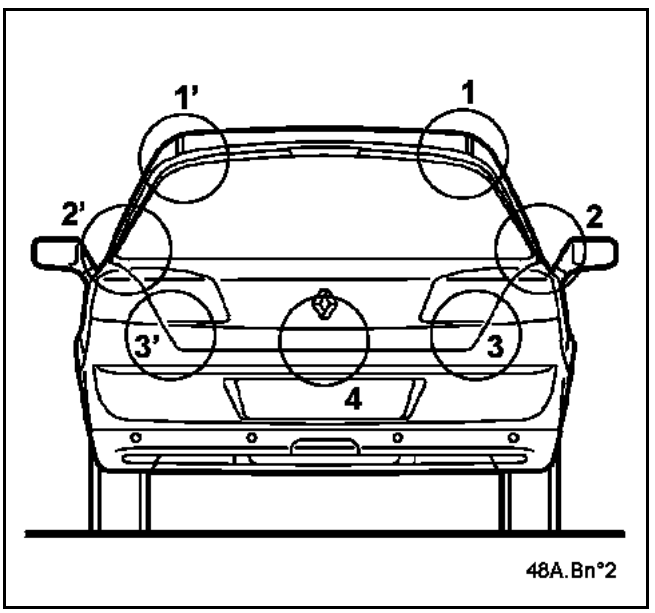

1. PRE-FITTING PREPARATION

On the vehicle:
Remove:
– the end panel trim,
– the striker panel,
– the rear wing lower trim flaps,
– the side centre lining stops,
– The bracket protectors,

On the tailgate:
Remove:
– the lock cover,
– the lock,
– the side centre lining stops,
– the hatch gas struts.

Attach the rest of the tailgate components.

2. FITTING THE COMPONENT

REMINDER: before final refitting, the seal must be made between the cowl side panel and the hinges with mastic (refer to **Technical Note no. 396A**).

Finger tighten all mountings without locking them.
A second person is required for this operation.

3. SETTINGS

NOTE: when setting special points, linked to an incident (e.g. rear flush-fitting), refer to the method for more detailed instructions.

It is important, even in the event of a fault, to check the whole adjustment sequence.

Perform the following settings in this order:

1 Tailgate central zones (1, 1' and 2, 2')
2 Adjusting the tailgate upper section clearance (1, 1')
3 Adjusting the tailgate lower section clearance and the closure panel (3, 3' and 4)
4 Additional adjustment of the tailgate lower section side clearance (3, 3')

GETtheMANUALS.org

1. Tailgate central zones (1, 1' and 2, 2')

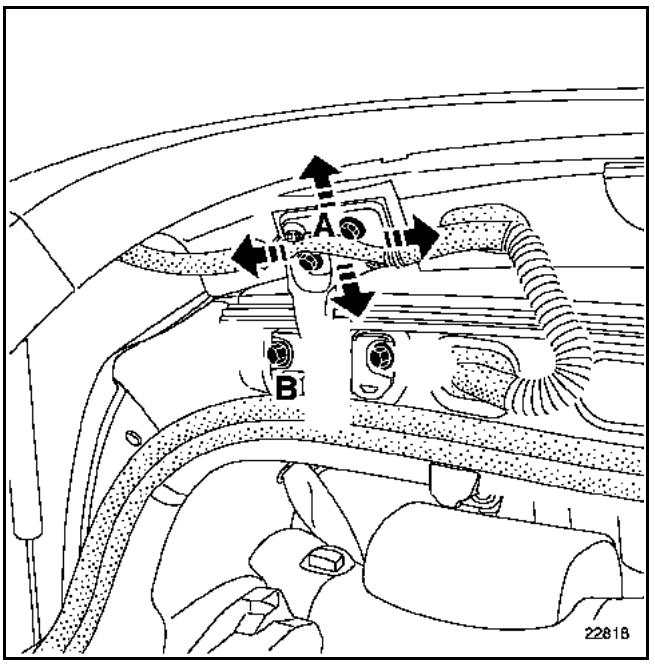

Ensure the positioning and the join with the roof panel and the zone 1, 1' and 2, 2 wing panels (see the adjustment zones diagram in the introduction).

IMPORTANT:
This is carried out by the upper bracket bolts (A) and also by the screws (B).
The original brackets are aligned along the holes on the lower section, making it possible only to adjust the bolts (A).

RAPPEL: Always begin by adjusting the hinges at the bodywork mounting points.

REMINDER: the striker plate, the lock, the stabilisers ... should be removed to avoid any obstruction.

Check the adjustments and pre-tighten in position.

2. Adjusting the tailgate upper section clearance (1, 1')

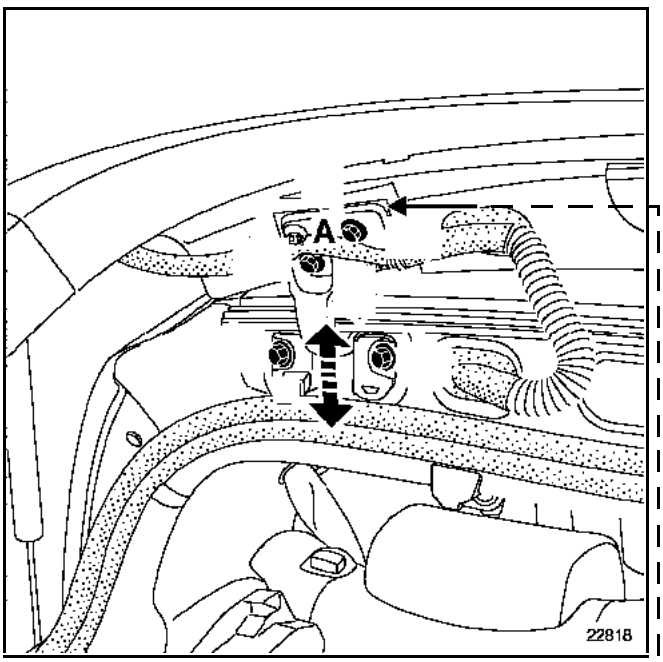

Ensure the clearance the tailgate in the upper section of zones 1, 1' (see the adjustment diagram in the introduction).

IMPORTANT:
This adjustment is carried out at the **upper joint between the hinges and the tailgate by using** special shims.
These shims are available in the Parts Catalogue.

Check the adjustments and screw all the bolts in position.

GETtheMANUALS.org

3. Adjusting the tailgate lower section clearance and the closure panel (3, 3' and 4)

NOTE: the stabilisers must be fitted for this operation.

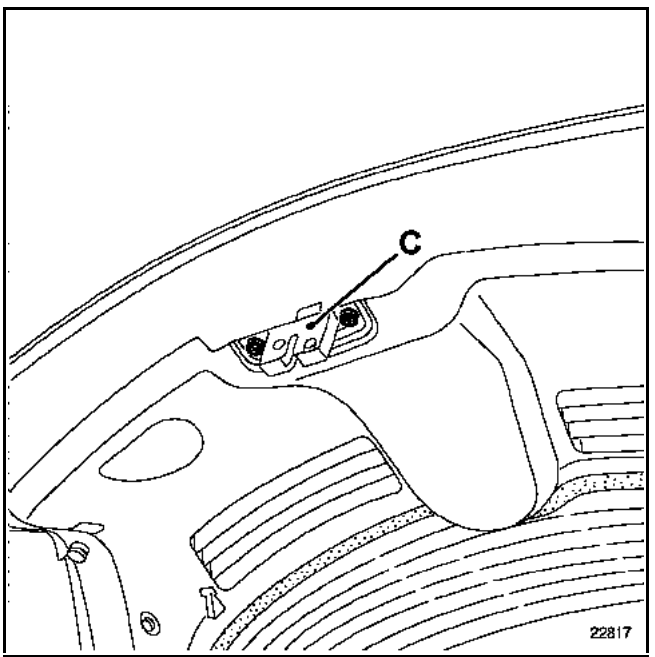

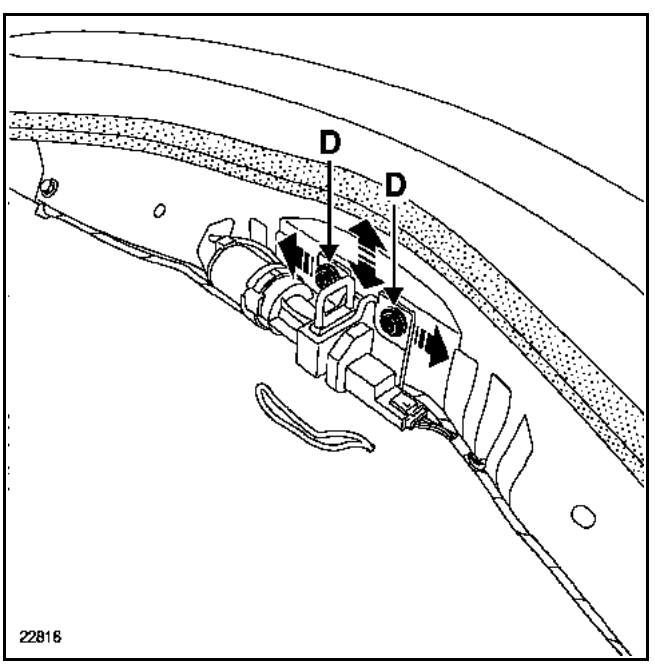

Ensure the play and clearance of the tailgate upper section in zones 2, 2', 3, 3' and 4 (see the adjustment diagram in the introduction) by the striker plate bolt (D).

CAUTION: It is not possible to adjust the lock (C).

The fitting of the striker plate (D) and the lock (C) must be as tight as possible to avoid any scraping.

Check the adjustments and tighten in position.

During this operation it is also possible to adjust the headlights.

GETtheMANUALS.org

4. Additional adjustment of the tailgate lower section side clearance (3, 3')

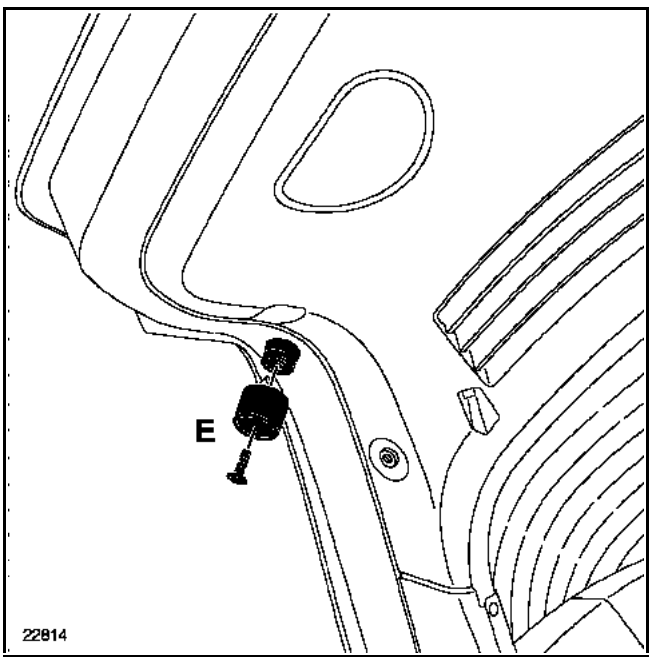

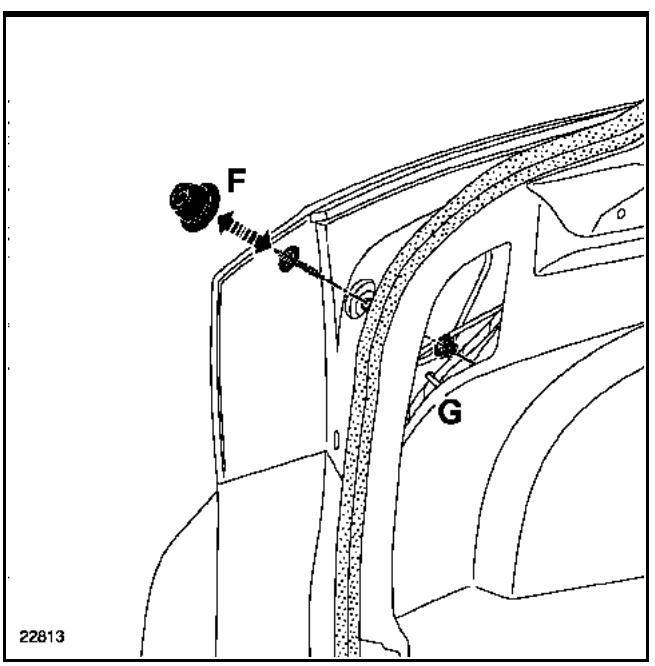

Ensure the play and clearance of the tailgate rear lower section in zones 2, 2', 3, 3 and 4 (see the adjustment diagram in the introduction) by the lower centering stops (F).

NOTE: this operation is complementary to the previous adjustment procedure.

CAUTION the fitting of the upper (E) and lower (F) centre pieces must be optimal (self-centring) to avoid any scraping.

Adjustment involves adjusting the centring devices (F):
– from the side on the bodywork by unscrewing the bolts (G),
– from above by tightening or untightening them on their shaft.

Check the adjustment and the correct operation then lock the tailgate in position.

GETtheMANUALS.org

VEL SATIS

5 Mechanisms and accessories

50A GENERAL INFORMATION

51A SIDE OPENING ELEMENT MECHANISMS

52A NON-SIDE OPENING ELEMENTS MECHANISMS

54A WINDOWS

55A EXTERIOR PROTECTION

56A EXTERIOR ACCESSORIES

57A INTERIOR ACCESSORIES

59A SAFETY ACCESSORIES

BJ0E - BJ0J - BJ0K - BJ0P - BJ0V - BJ0M

77 11 311 162 DECEMBER 2001 EDITION ANGLAISE

"The repair methods given by the manufacturer in this document are based on the technical specifications current when it was prepared.

The methods may be modified as a result of changes introduced by the manufacturer in the production of the various component units and accessories from which his vehicles are constructed."

All copyrights reserved by Renault.

Copying or translating, in part or in full, of this document or use of the service part reference numbering system is forbidden without the prior written authority of Renault.

© RENAULT 2001

GETtheMANUALS.org

Mechanisms and accessories

Contents

		Page
50A	**GENERAL INFORMATION**	
	Safety	50A-1
51A	**SIDE OPENING ELEMENT MECHANISMS**	
A	Front door lock barrel	51A-1
B	Exterior door handle	51A-2
C	Door lock	51A-3
D	Front door window riser	51A-5
E	Rear door window riser	51A-6
52A	**NON-SIDE OPENING ELEMENT MECHANISMS**	
A	Bonnet lock and striker plate	52A-1
B	Tailgate opening control	52A-2
C	Tailgate lock and striker plate	52A-3
D	Sunroof	52A-4
E	Sunroof motor	52A-6
F	Moving panel	52A-8
G	Sunblind	52A-10
54A	**WINDOWS**	
A	Windscreen	54A-1
B	Front door window	54A-3
C	Rear door window	54A-6
D	Rear screen	54A-9

		Page
55A	**EXTERIOR PROTECTION**	
A	Front bumper	55A-1
B	Rear bumper	55A-5
C	Side protective mouldings	55A-8
D	Radiator grille	55A-10
E	Scuttle grille	55A-11
F	Roof trim	55A-13
G	Body side trims	55A-14
H	Sill panel protector	55A-15
56A	**EXTERIOR ACCESSORIES**	
A	Door mirror	56A-1
B	Door mirror glass	56A-3
C	Front door upright exterior trim	56A-4
D	Rear door upright exterior trim	56A-5
57A	**INTERIOR ACCESSORIES**	
A	Centre console	57A-1
B	Instrument panel	57A-4
C	Interior rear-view mirror	57A-11
D	Grab handle	57A-12
E	Sun visor	57A-13
59A	**SAFETY ACCESSORIES**	
A	Front seat belt	59A-1
B	Rear seat belt	59A-2
C	2/3 rear seat belt	59A-4

GETtheMANUALS.org

AIR BAG AND PRETENSIONERS

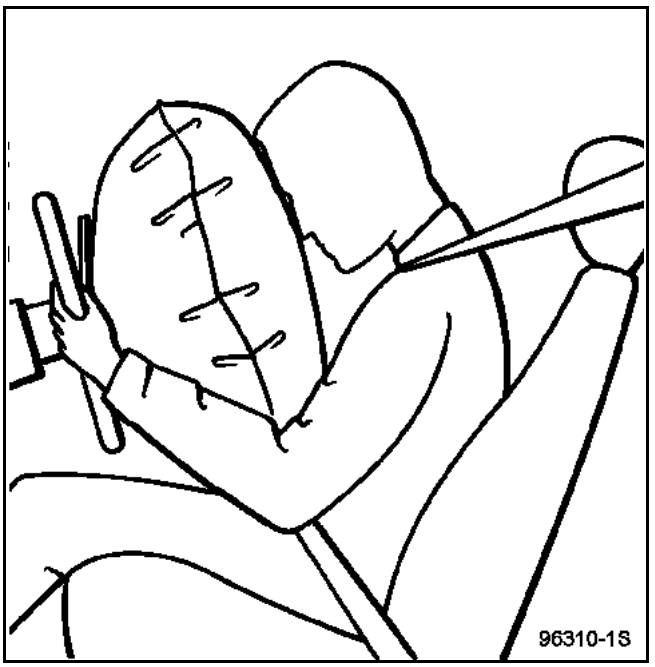

IMPORTANT: all operations on air bag and pretensioner systems must be carried out by qualified trained personnel.

IMPORTANT: when working under the vehicle do not hit the floor panels without having locked the computer using the diagnostic tool.
Refer to section 80

IMPORTANT: pyrotechnic systems (pretensioners or airbags) must not be handled near to a heat source or flame as they may be triggered.

AIR BAG LABEL SET

The adhesive labels must be reapplied to the windscreen or dashboard if these have been replaced, if airbags are fitted.

All of these labels are available as a set (see **SPARE PARTS CATALOGUE**).

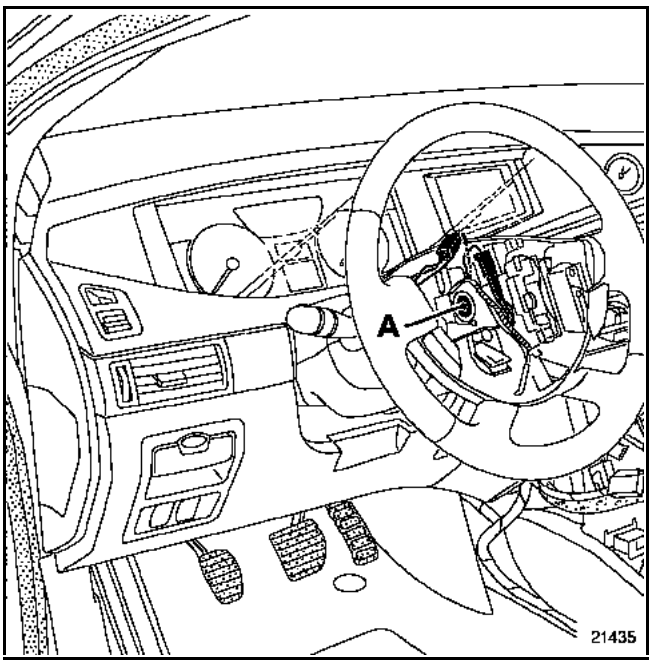

The steering wheel bolt must be replaced every time the steering wheel is removed.
See sections 88 and 57B-B.

HEAT SHIELDS

Heat shields must be refitted, whether they are for bodywork or mechanical components.

TIGHTENING TORQUES

The recommended tightening torques must be observed.

PRODUCTS

Read the precautions for use with care and observe the safety instructions by using the appropriate protection (gloves, mask, etc.).

GETtheMANUALS.org

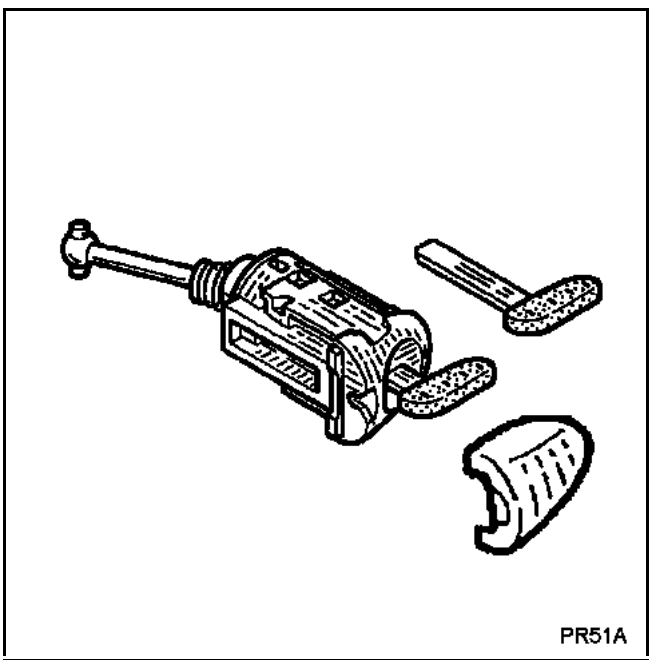

REMOVAL

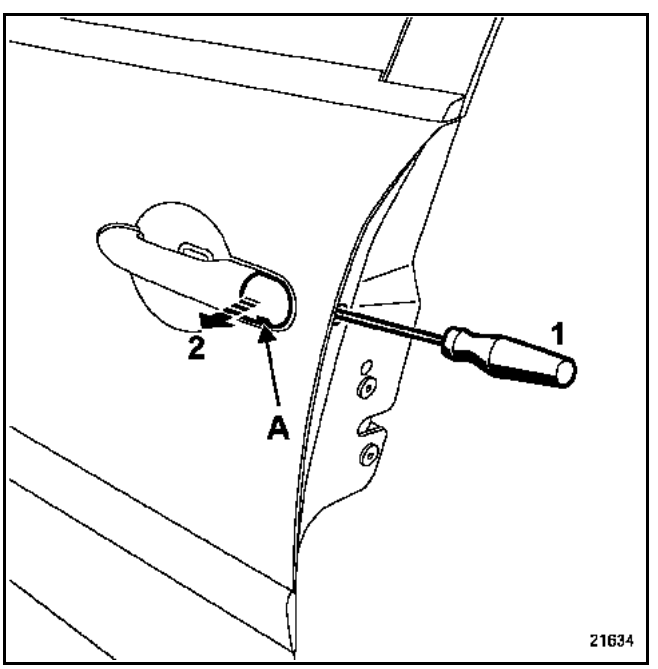

Remove:
– lock barrel cover (A),
– the blanking cover; unscrew screw (1), (**Torx T20**) without removing it.

Release lock barrel (2).

GETtheMANUALS.org

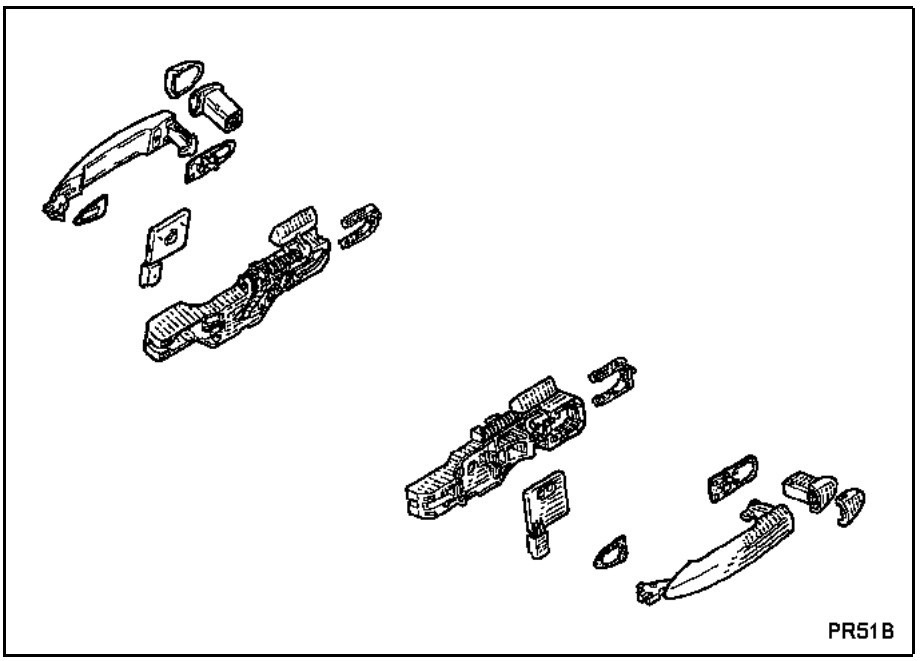

REMOVAL

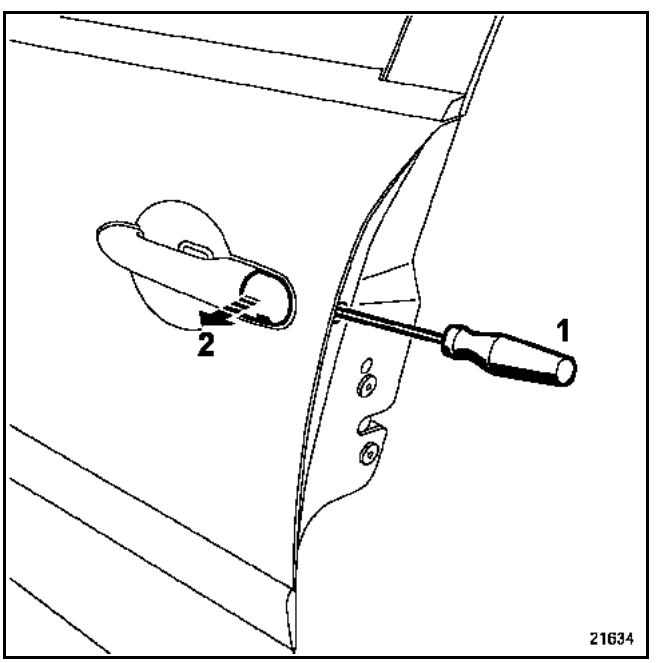

Remove:
– the lock barrel cover,
– the blanking cover; unscrew screw (1), (**Torx T20**) without removing it.

Release lock barrel (2).

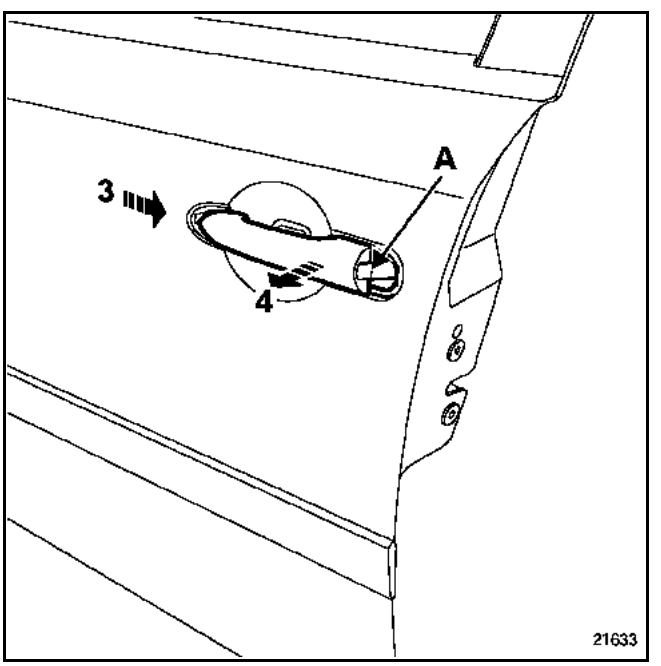

Release the handle by moving in directions (3) and (4).

REFITTING

Position handle seal (A).

Proceed in the reverse order to removal.

GETtheMANUALS.org

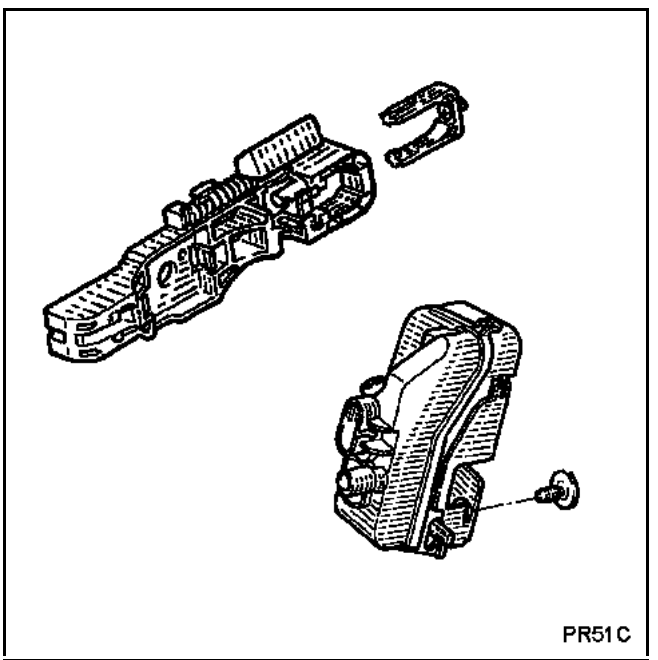

REMOVING THE FRONT DOOR LOCK

Remove:
– the door trim (**section 72A.A**),
– the exterior handle (**section 51A.B**),

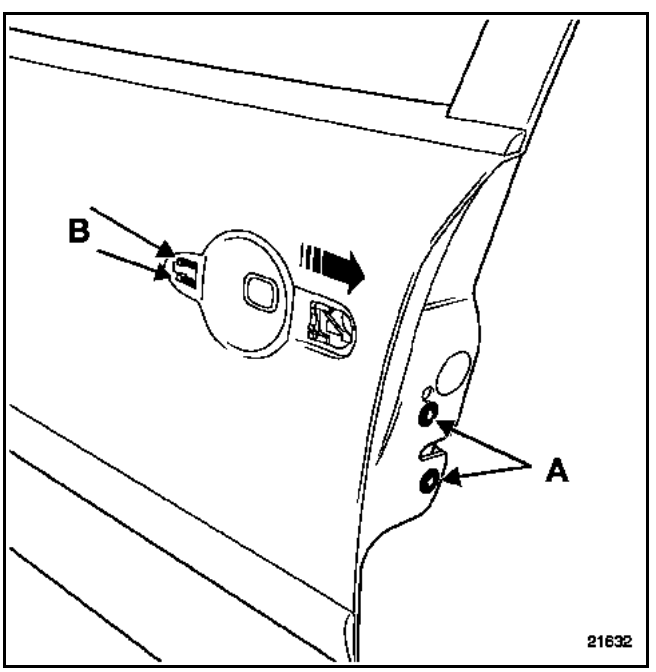

– the two mountings (A), (**Torx T30**).

Press on the two module latches (B).

Release the lock and the module through the door box section.

Disconnect the connectors.

REMOVING THE REAR DOOR LOCK

First remove:
– the door trim (**section 72A.B**),
– the exterior handle (**section 51A.B**),

Release the lock with the module.

REMOVING THE PRISM

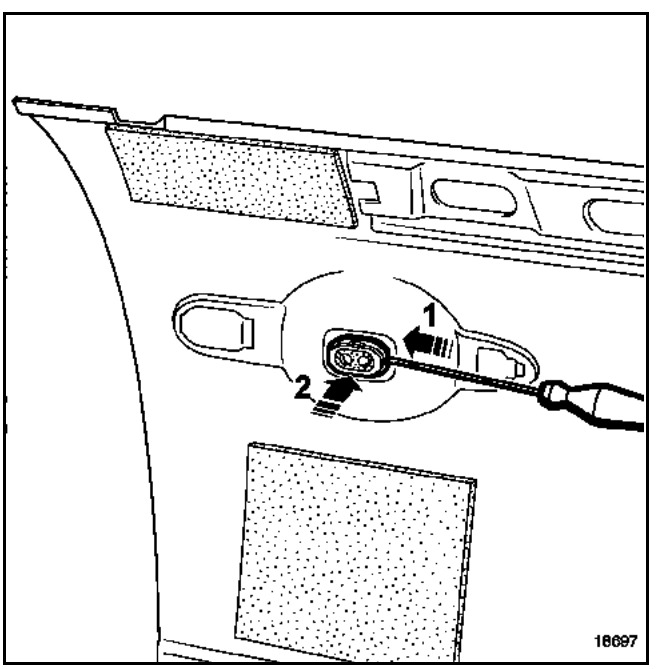

Unclip the prism at (1) then (2) using a screwdriver.

GETtheMANUALS.org

REFITTING THE LOCK

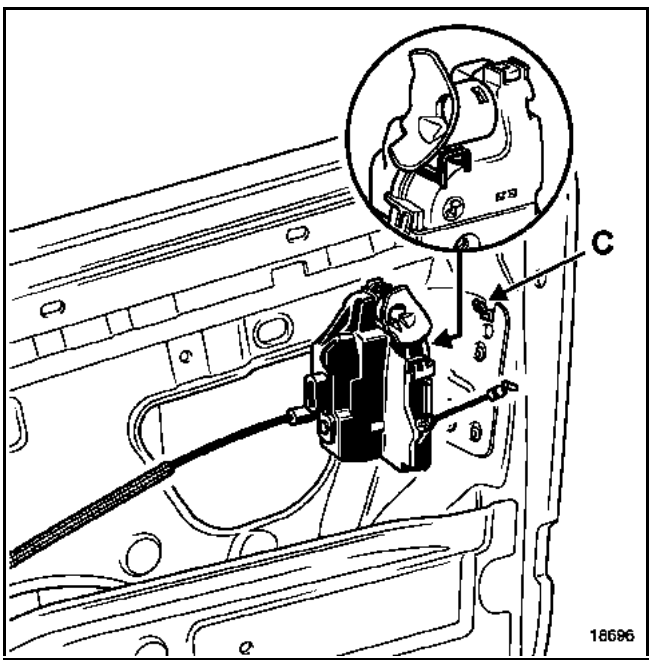

Position the lock on door box section holding hook (C), then proceed in the reverse order to removal.

GETtheMANUALS.org

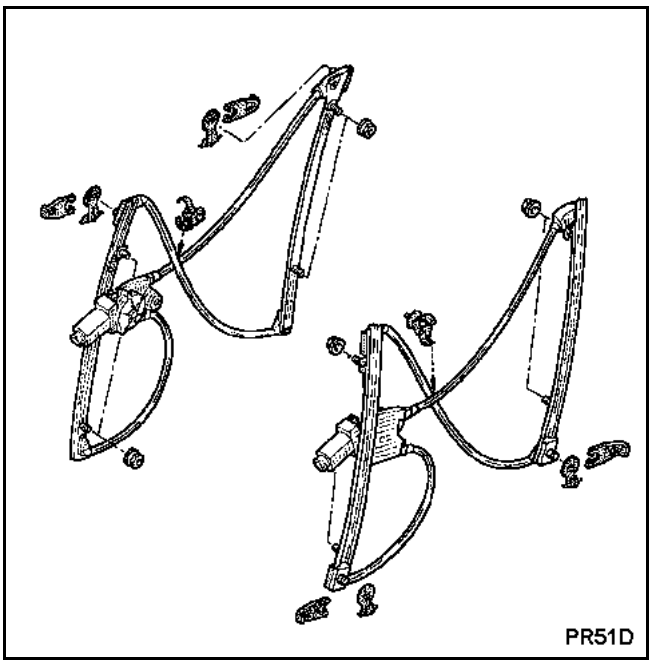

REMOVAL

Remove:
– the door trim (**section 72A.A**),

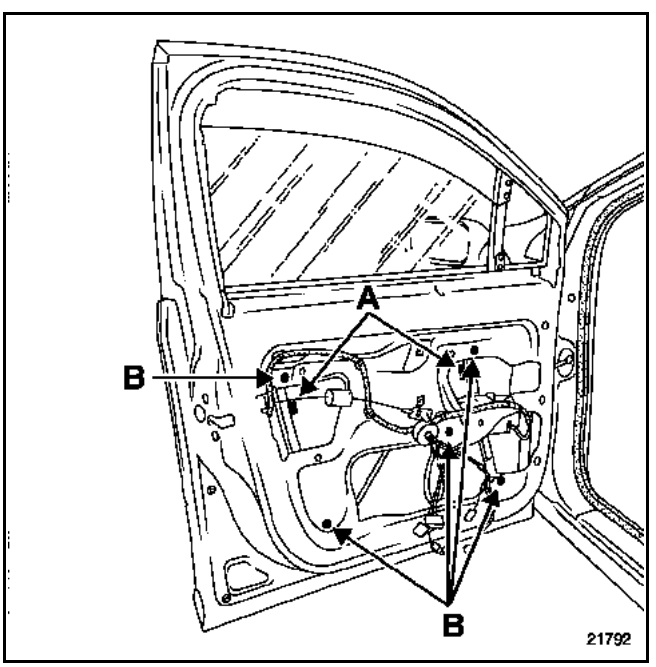

– the two window mounting clips (A), release the window from the runners for the window riser moving slides.

Align the window manually in the upper position, block it with masking tape.

Remove mechanism screws (B).

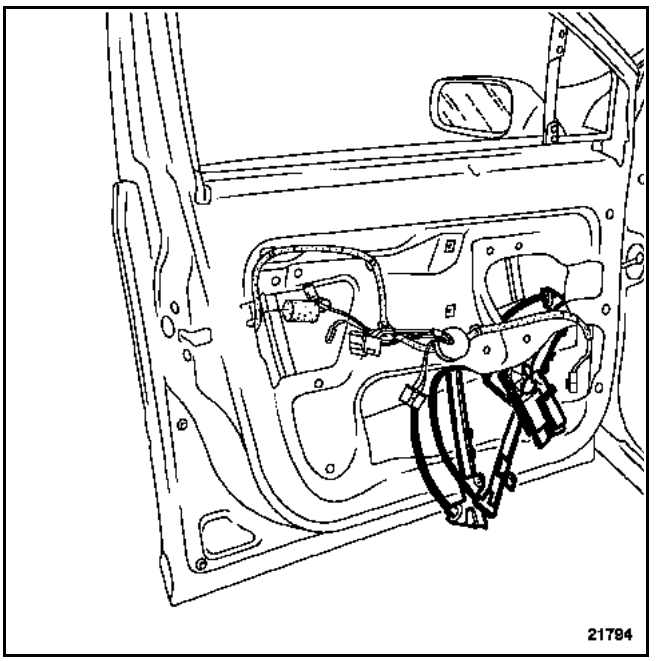

Disconnect the power supply connector.

Remove the window via the lower opening of the door box section.

REFITTING

To refit, proceed in the reverse order to removal.

INITIALIZATION OFWINDOW-RISER MOTOR

Ignition on.

Close the window as far as the upper stop (it rises in jerky movements).

Hold the switch (for 2 seconds).

Lower the window to the bottom stop, hold the switch (for 2 seconds).

The motor is initialized.

GETtheMANUALS.org

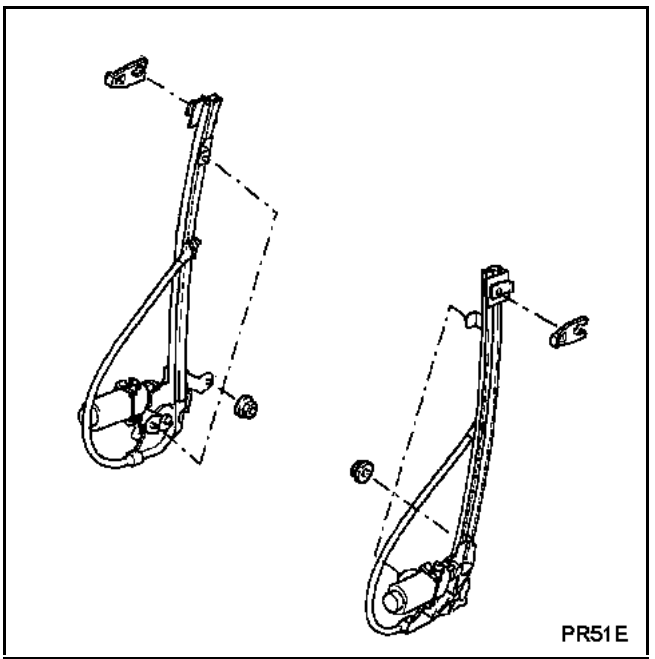

REMOVAL

Remove:
– the door trim (**section 72A.B**),

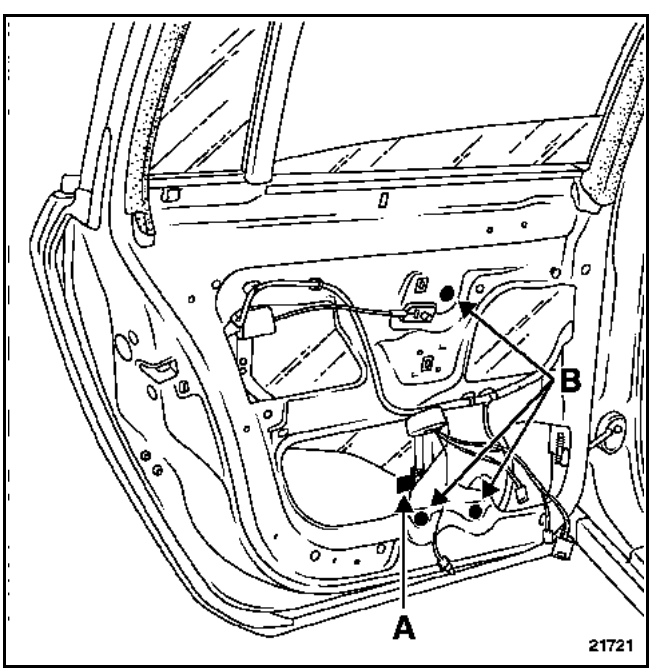

– window mounting clip (A), then release the window from the runners for the window riser moving slides.

Lock the window in the closed position (with masking tape).

Remove mechanism nuts (B).

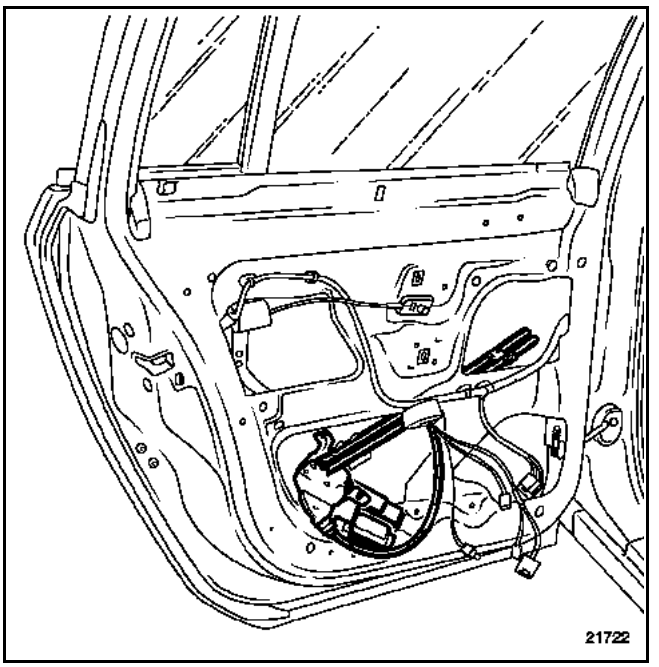

Disconnect the power supply connector.

Remove the window via the lower opening of the door box section.

REFITTING

To refit, proceed in the reverse order to removal.

INITIALIZATION OFWINDOW-RISER MOTOR

Ignition on.

Close the window to the upper stop.

Hold the switch (for 2 seconds).

Lower the window to the bottom stop, hold the switch (for 2 seconds).

The motor is initialized.

GETtheMANUALS.org

REMOVAL

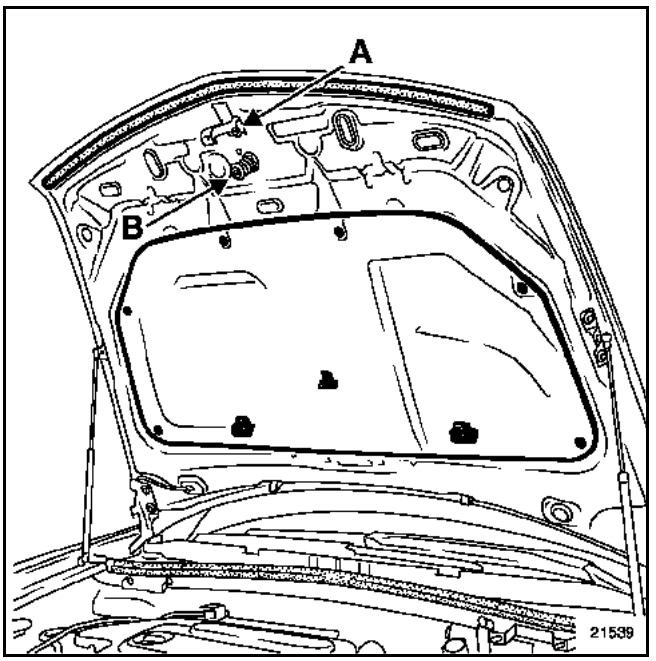

Remove:
– bolt (A): release the safety catch;
– striker plate (B);

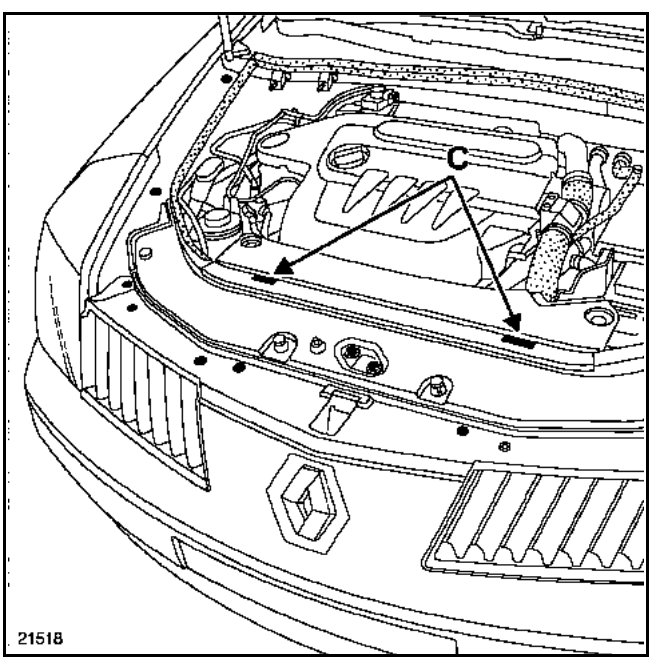

– the engine compartment lining (C);
– the lock mounting bolts.

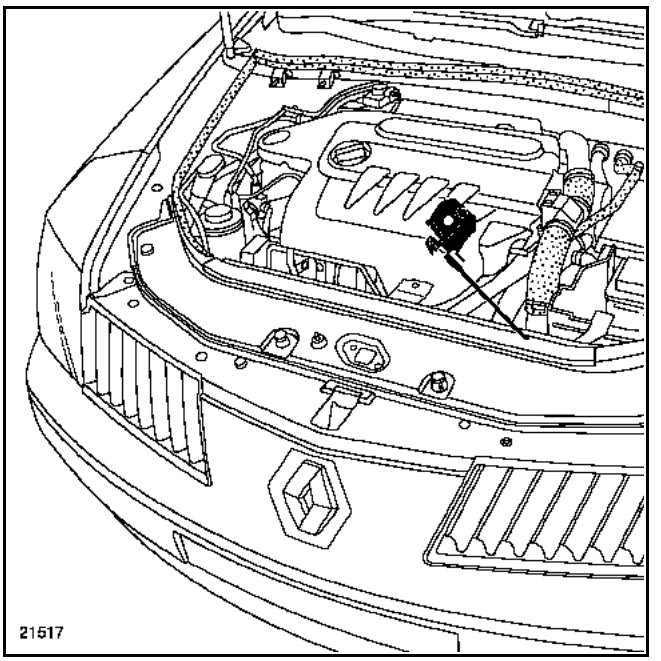

Release the cable and lock.

GETtheMANUALS.org

REMOVAL

Remove:
– the tailgate trim (**section 73A.B**);

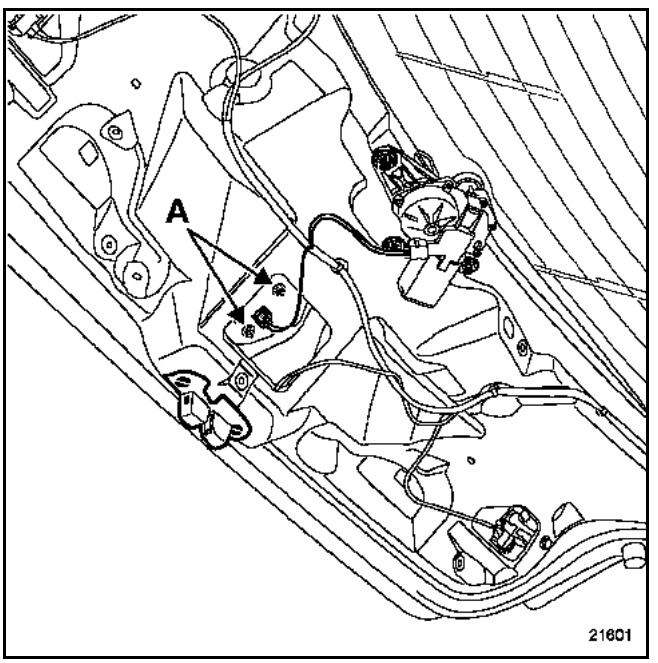

– the bolts (A).

Disconnect the motor.

Withdraw the opening control.

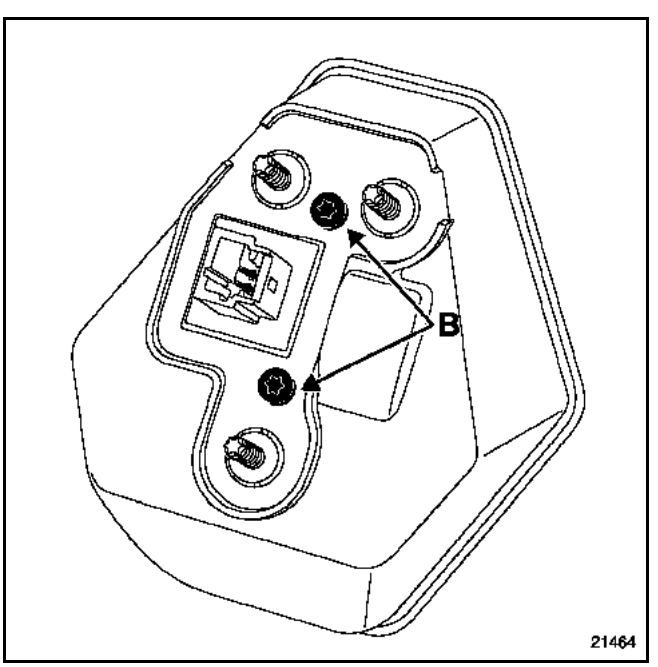

Remove the bolts (B).

Withdraw the badge.

GETtheMANUALS.org

NOTE: in the event of a failure, it is possible to open the tailgate manually.

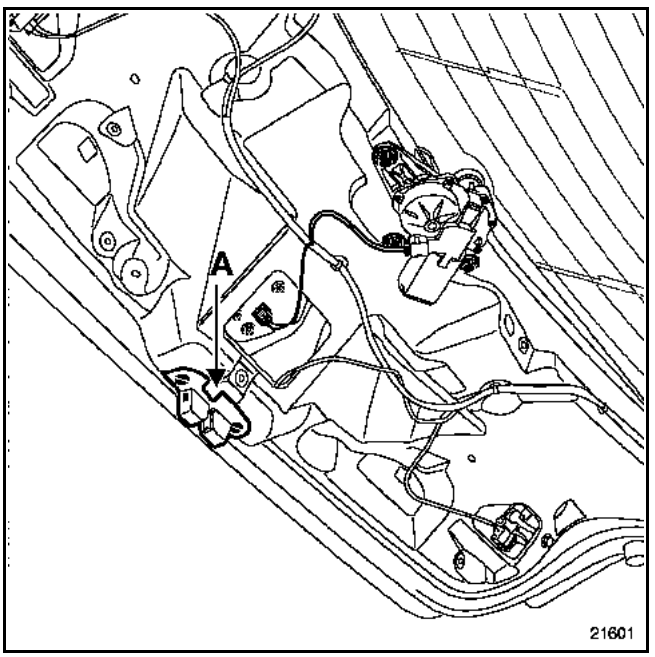

Operate the catch (A) from the interior of the vehicle, using a small screwdriver.

REMOVAL

Remove:
– the rearend panel lining (**section 71A.H**);

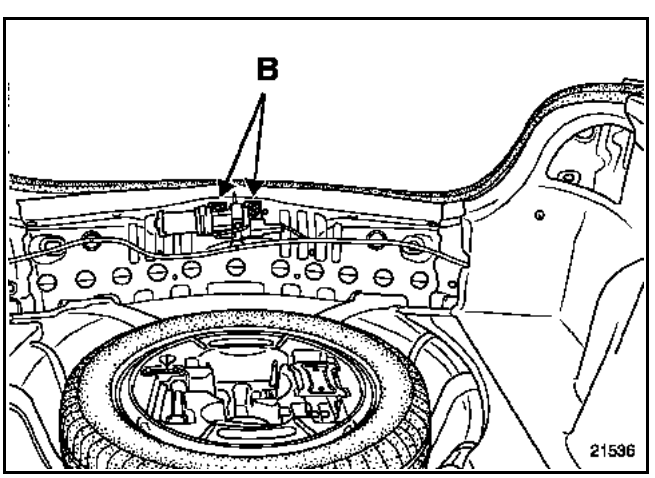

– the mounting fittings (B), and disconnect the connector.

Withdraw the striker plate.

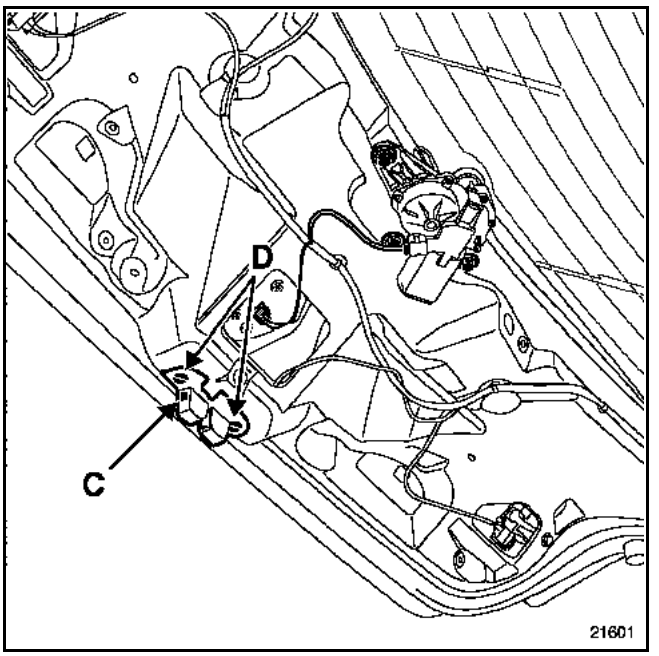

Using a small flat screwdriver, release the cover from the lock (C).

Remove the mounting fittings (D).

Withdraw the lock.

GETtheMANUALS.org

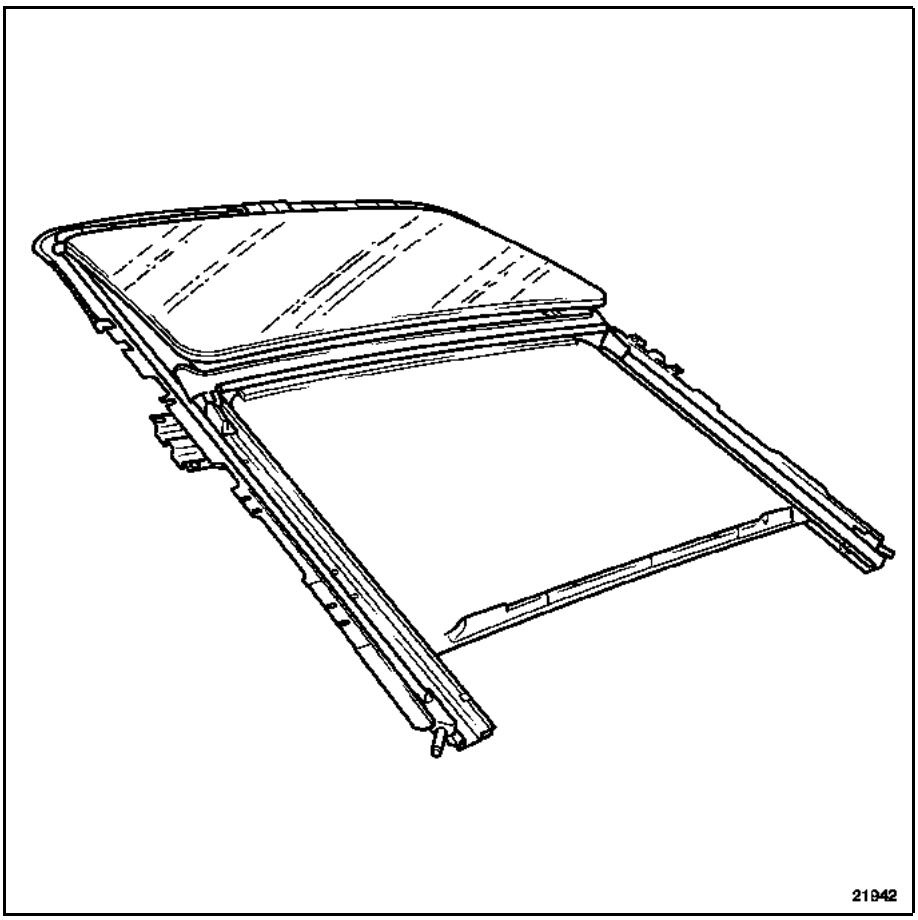

REMOVAL

Remove the head lining (**section 71A.J**).

Disconnect the sunroof motor connectors.

Tilt the rear seatbacks.

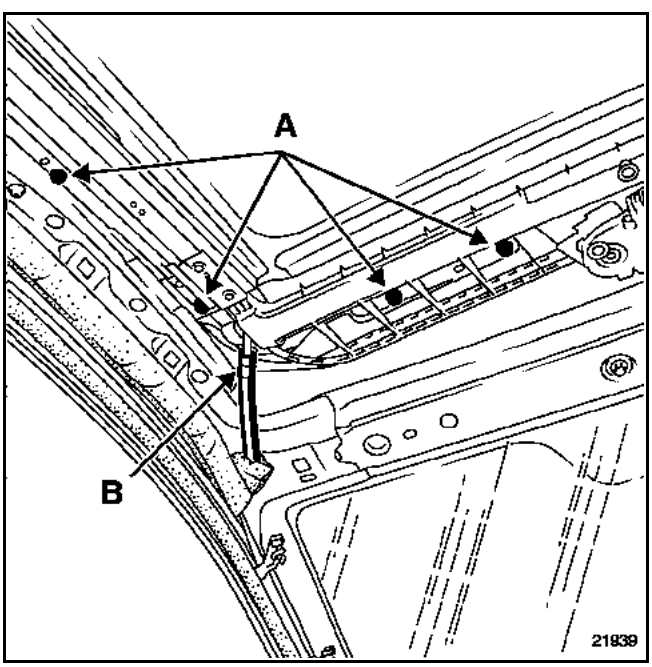

Remove:
– the twelve mounting bolts (A) (M5 hexagon-head, **8 mm**);
– the four water drainage pipes (B).

GETtheMANUALS.org

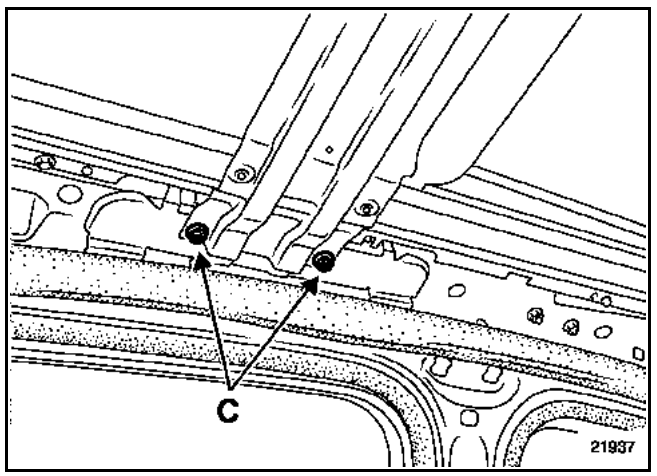

With two people:
– remove the four mounting bolts from the centre cross member (C) (M8);
– release the sunroof to the rear of the vehicle.

REFITTING

With two operators, position the whole assembly; refit the twelve bolts (A) (M5 hexagon-head, **8 mm**) and the four bolts (C) (M8) without tightening.

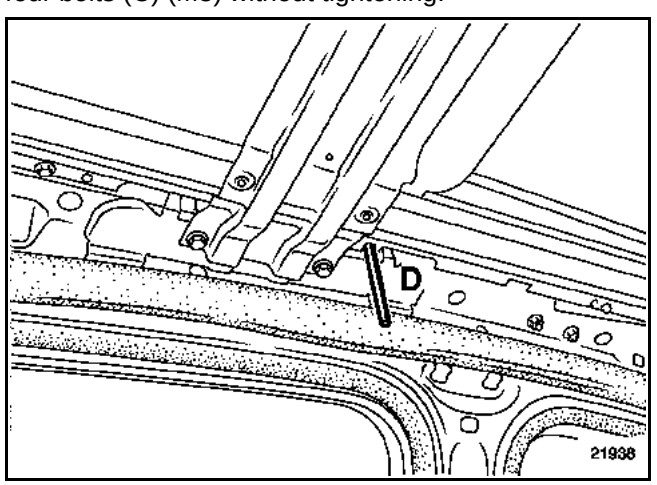

Centre the sunroof using two pins (**dia. 10 mm**) in the locating holes (D) for sunroof adjustment along the Y axis.

First tighten the four bolts (C) (M8) of the central crossmember; then tighten the twelve bolts (A) (M5 hexagon-head, **8 mm**) of the sunroof, proceeding diagonally.

Position the four water drainage pipes.

NOTE: when a bolt (A) (M5 hexagon head, **8 mm**) does not fulfil its locking role, it is possible to change hole.

Take the hole located nearby, which is designed for the purpose.

Perform finishing settings on the moving panel (**section 52A.F**).

After setting the moving panel:
– Perform a roof sealing check;
– Refit the head lining (**section 71A.J**);
– Initialise the engine (**section 52A.E**).

TIGHTENING TORQUES (in N.m)	
Blind holder box bolt (A) (M5 hexagon head, 8 mm)	**4 ± 20%**
Bolt (C) located on the centre cross member (M8)	**21 ± 20%**
Lug bolt on rail (M6)	**8 ± 20%**

GETtheMANUALS.org

REMOVAL

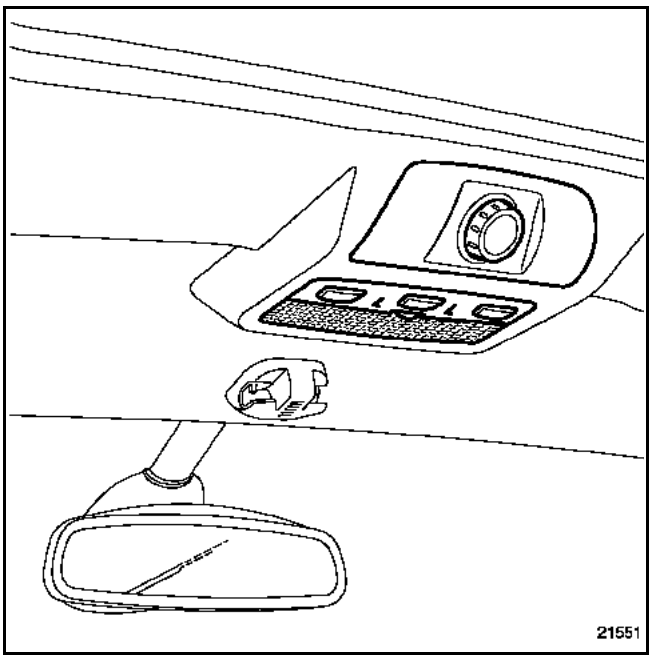

Remove the sunroof control unit.

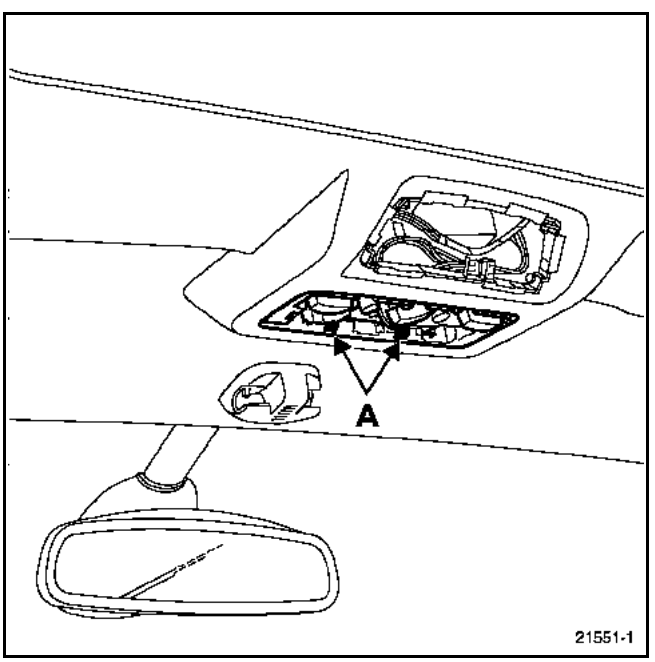

Remove the courtesy light cover to access the clips (A).

Disconnect the various connectors; withdraw the courtesy light.

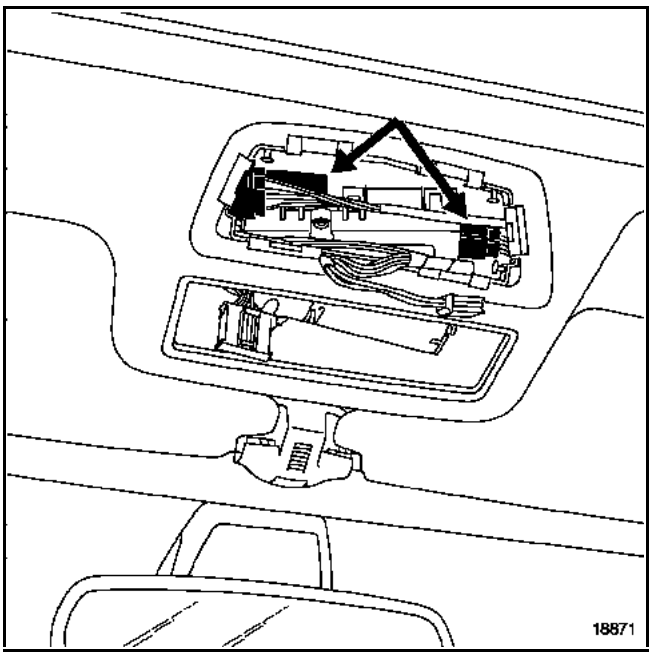

Disconnect the two motor connectors.

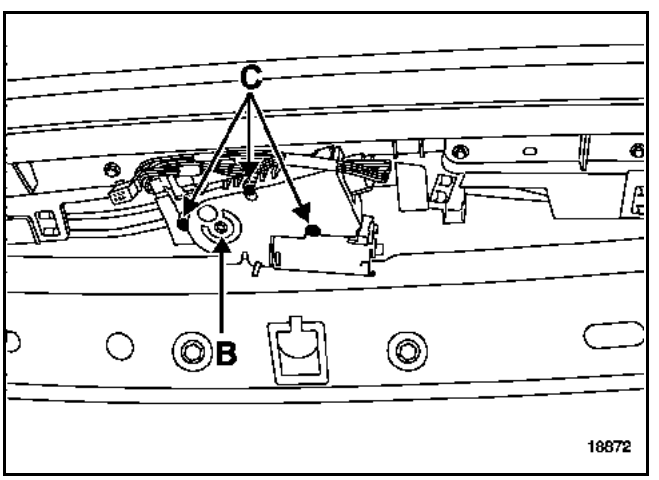

Using a **4mm** Allen key, turn the bolt (B) to close the moving panel (if it is open).

Remove the three bolts (C) (star T20); remove the motor through the courtesy light hole.

In the event of battery disconnection, an electrical fault or servicing of the sunroof, the system will only operate in manual mode, in short jerky movements.

GETtheMANUALS.org

INITIALISATION PROCEDURE

1 - Set the switch to maximum tilt position.

2 - Press the switch (for about 5 seconds).

The motor gradually moves until it tilts completely and then redescends a few centimetres

3 - Release the switch.

4 - Press the switch and hold it down **(if it is released during cycle execution, the cycle will stop, and the preceding corrections will need to be repeated).**

The sunroof completes one full cycle of sliding opening and closing.

5 - The sunroof is initialised.

NOTE: the time between two successive actions must not exceed **five seconds** during the initialisation procedure, otherwise the computer will start a new initialisation cycle.

GETtheMANUALS.org

REMOVAL

Remove the two covers from the mechanism.

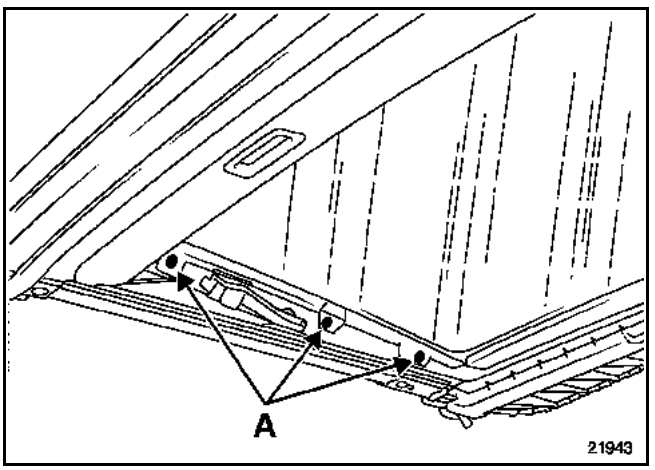

Remove the six fasteners (A).

Withdraw the moving panel.

REFITTING (two people)

To refit, proceed in the reverse order to removal.

ADJUSTMENT OF THE MOVING PANEL

To perform this adjustment, the panel must be in closed position.

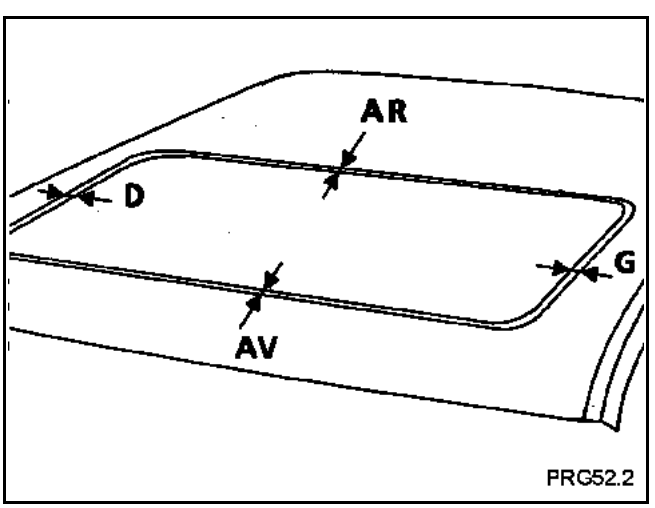

Using a ruler, check the clearances between the roof panel frames and the upper part of the moving panel encapsulation (B).

Front: **11 ± 0.5** LH line: **10 ± 0.5**

Rear: **11 ± 0.5** RH line: **10 ± 0.5**

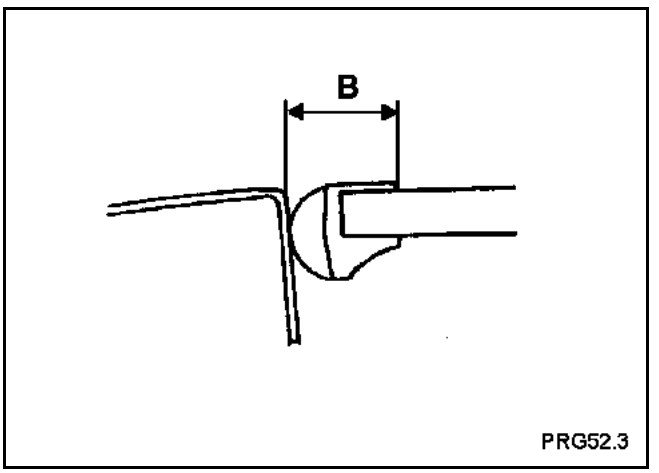

1 Adjustment of front and rear gap (on X)

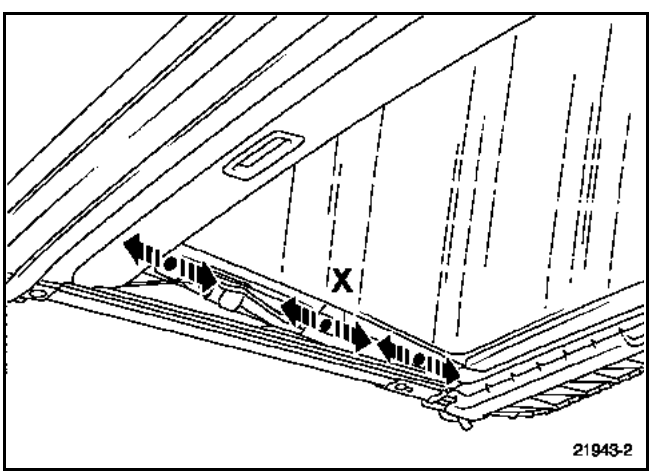

With the bolts slightly loosened, position the panel on X.

GETtheMANUALS.org

2 Adjustment of side gap (on Y)

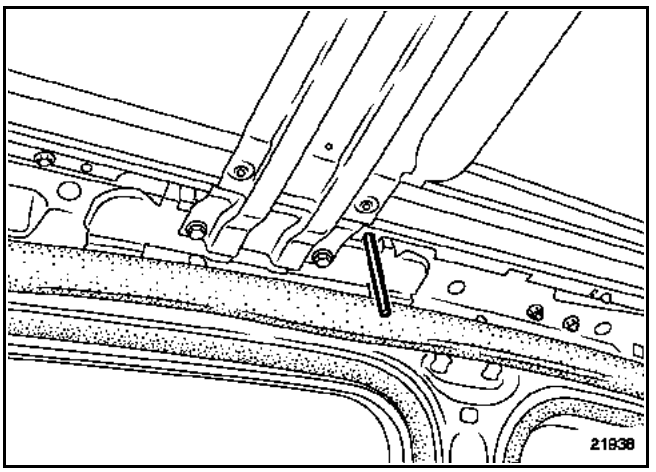

Remove the headlining.

Loosen the roof mounting bolts; install two pins (dia. 10 mm) in the holes provided for the purpose and position the roof on Y.

3 Adjustment of opening gap (at Z)

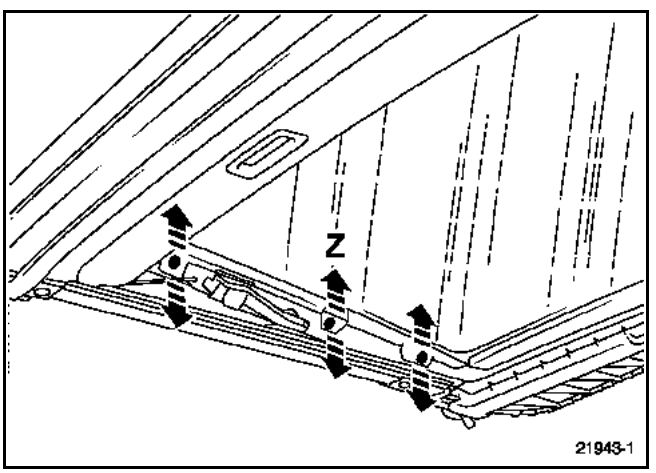

Adjust the bolts and panel as described above for the front and rear gap.

Place the ruler on its edge level with the roof frame to determine whether it is flush with the moving panel.

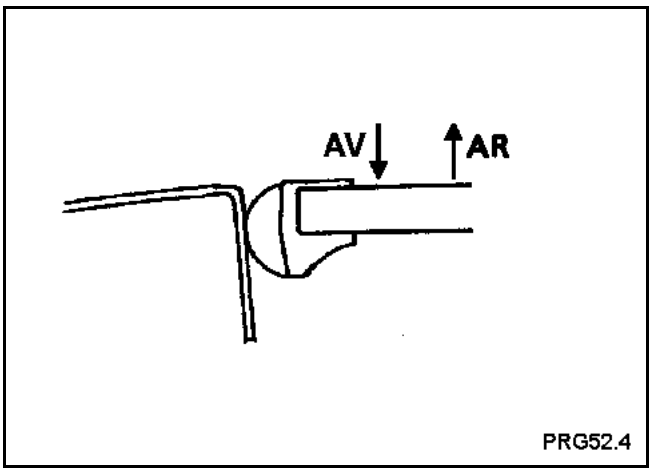

Rear tolerance: **1 mm** protrusion by the panel.
Front tolerance: **1 mm** protrusion by the panel.

TIGHTENING TORQUES (in N.m)	
Blind holder box bolt (A)	**4 ± 20%**
Bolt (C) located on the centre cross member (M8)	**21 ± 20%**

GETtheMANUALS.org

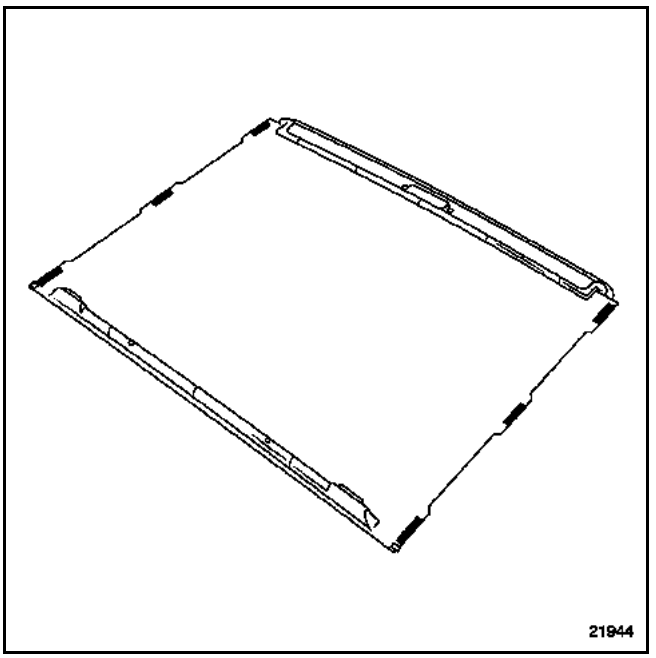

REMOVAL

Remove:
– the head lining (**section 71A.J**);
– the sunroof (**section 52A.D**).

Place the moving panel in the tilt position.

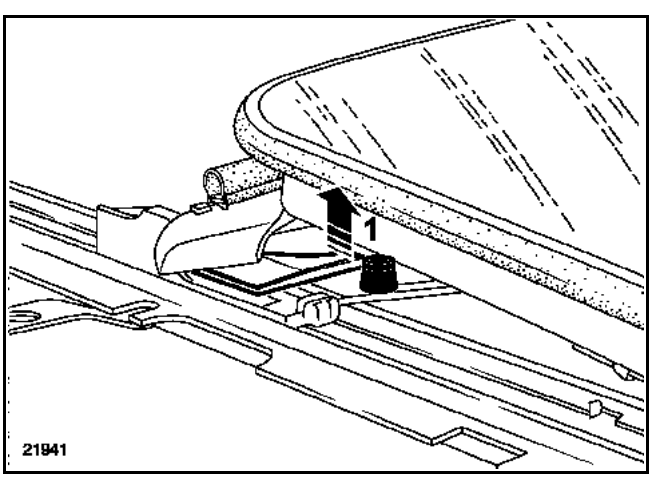

Release:
– the tabs (1) (at both ends of the roof);
– the sunblind partially.

GETtheMANUALS.org

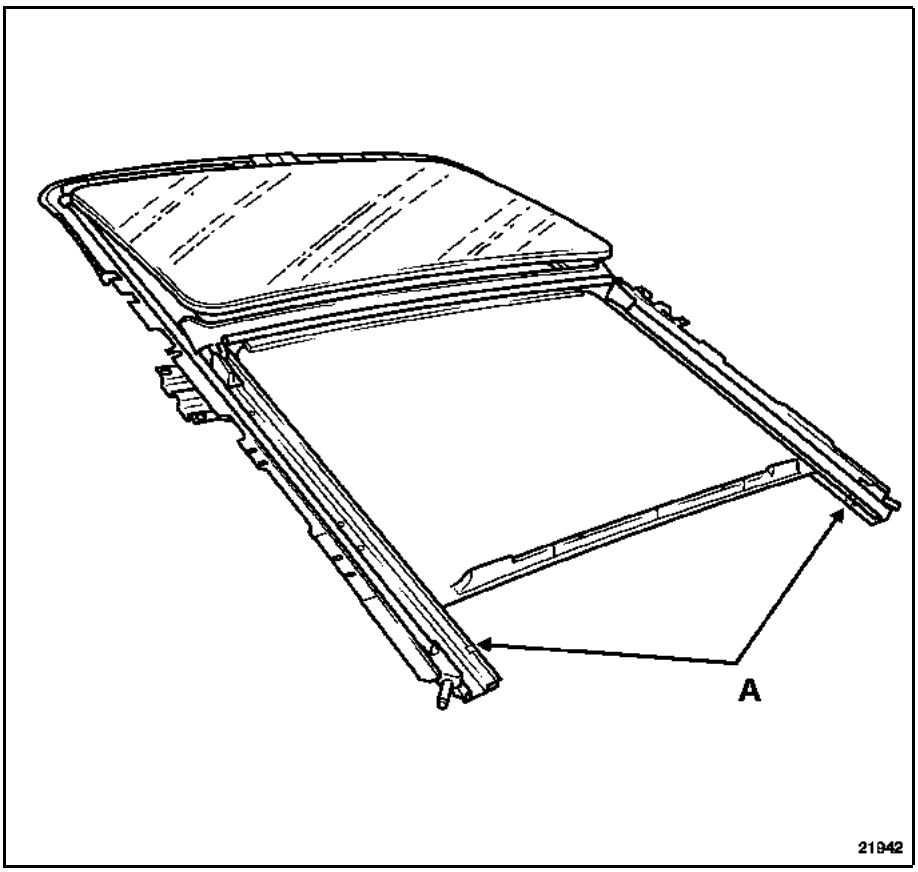

Remove the two thrust stops (A).

Release the sunblind by sliding it towards the rear of the box.

REFITTING

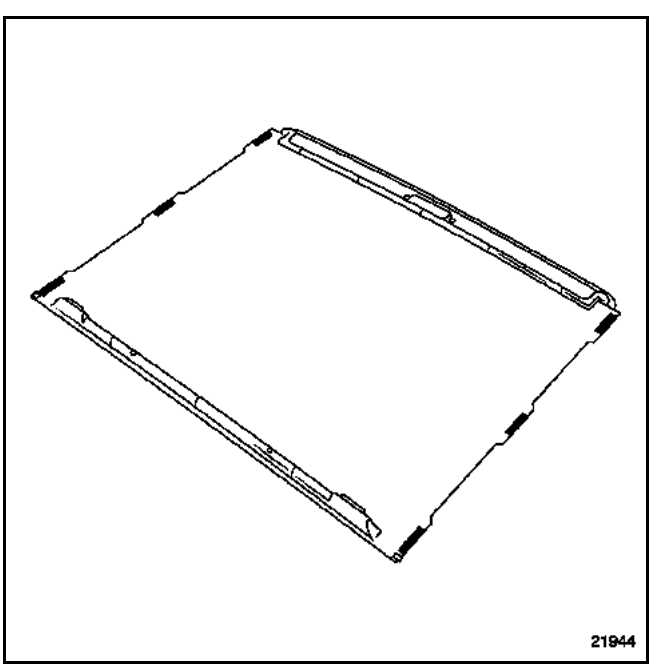

Before refitting the sunblind, check that the six slide pads are in sound condition (replace them if necessary).

Insert the sunblind in the box's slide rails; take care not to dislodge the six pads.

Carry out a sunblind sliding test before refitting the sunroof.

Adjust the sunroof.

Refit the linings.

GETtheMANUALS.org

SPECIAL TOOLING REQUIRED	
Ele. 1552	Tool for removing windscreen wiper arms
Car. 1640	Instrument panel protector

REMOVAL

NOTE: when a windscreen is replaced, the windscreen will be fitted with the upper seal.

Remove:
– the windscreen pillar trims (see section **71A.A**),
– the interior rear-view mirror (see **section 57A.C**),
– the windscreen wiper arms **(Ele. 1552)**
– the scuttle panel grille (see **section 55A.C**).

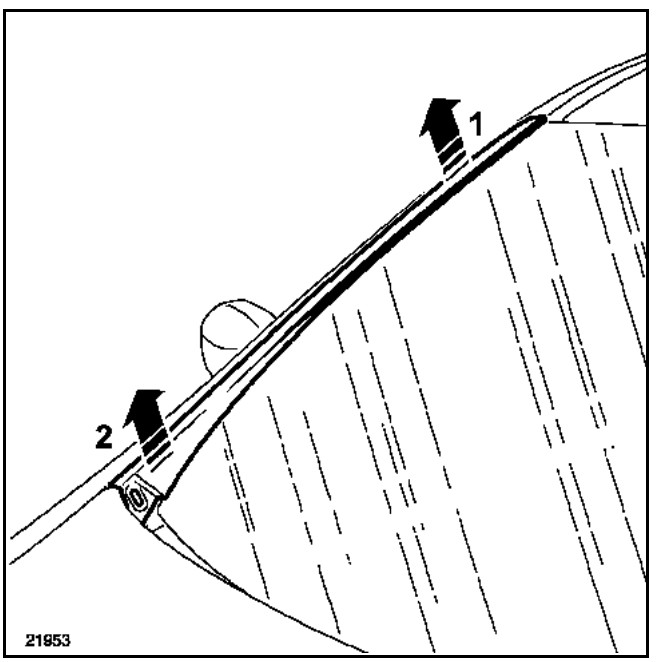

Unclip windscreen surround (**1**) then (**2**).

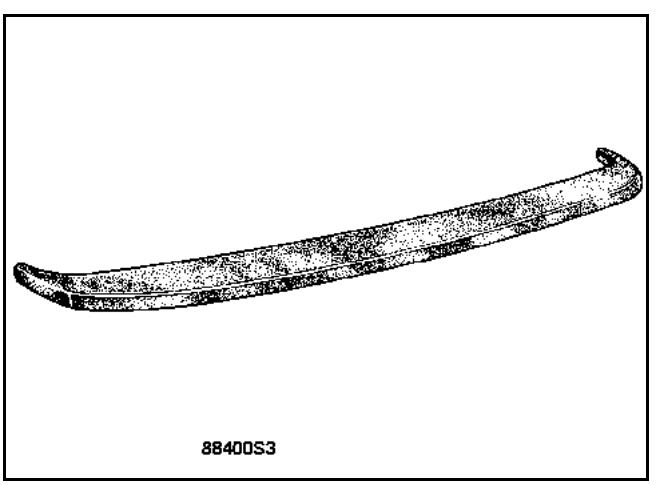

Fit the instrument panel protector (**Car. 1640**).

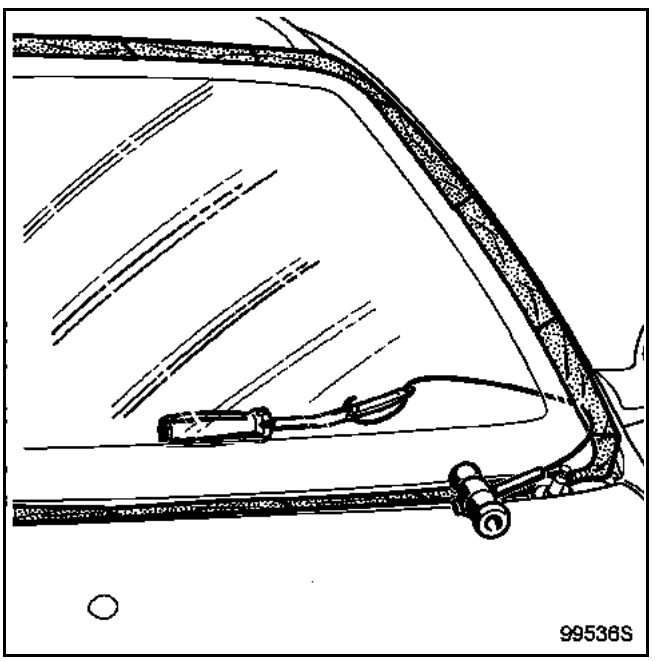

Protect the wings, the pillar apertures and the edge of the roof.

Cut through the bead of adhesive.

GETtheMANUALS.org

REFITTING

See Technical Note **560 A for information on preparation and bonding**.

CAUTION: it is essential to use a **high tensile** adhesive for gluing windows.

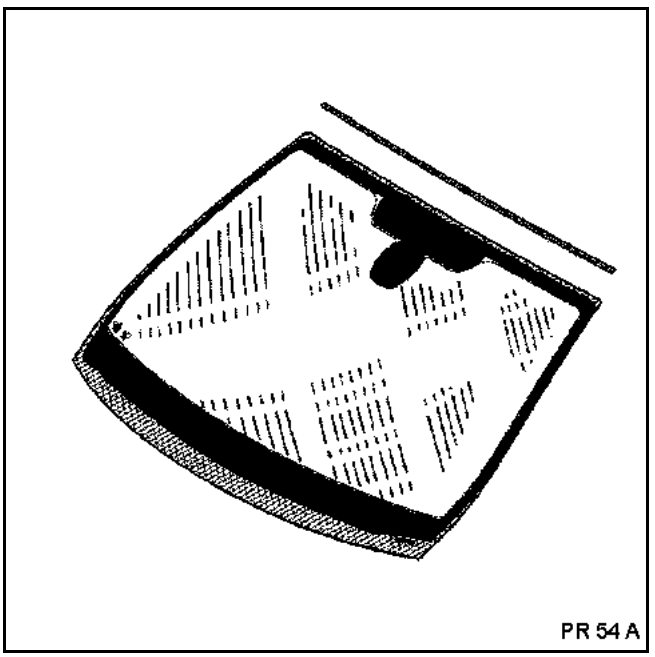

If the windscreen is removed during operations on the bodywork, the upper seal will have to be replaced (adhesive).

Fit the lower crosspieces (adhesive) onto the aperture:
– one in the centre,
– one on each side **400 mm** from the centre.

Replace the acoustic foam (if necessary).

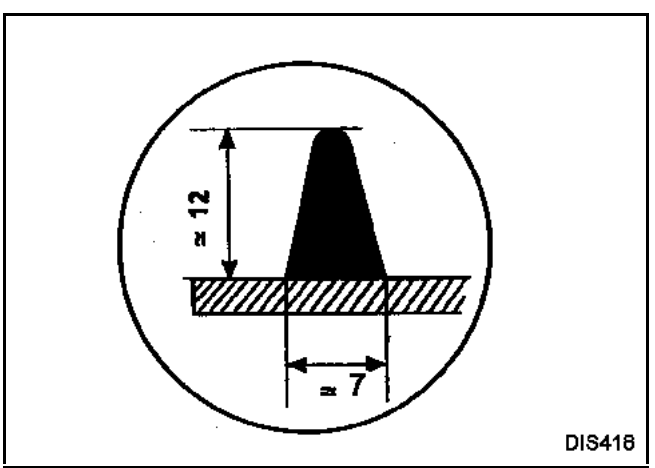

Keep to the size of the glue bead.

Glue the windscreen in place (two people required).

Distribute the gap to either side.

IMPORTANT: Replace the safety labels which are available from the replacement parts store catalogue.

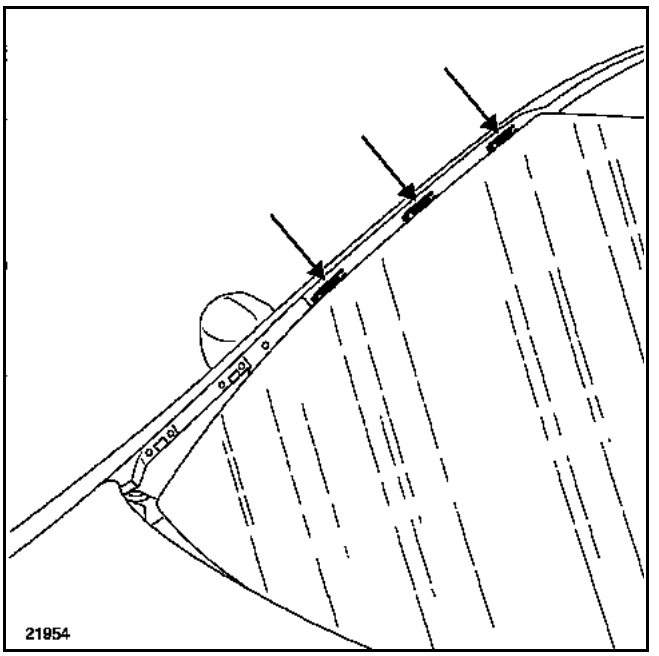

Replace the exterior surround clips.

TIGHTENING TORQUE (in Nm)	
Windscreen wiper arm nuts	**20**

Position the lower arm (RH) on mark (4) on the windscreen.

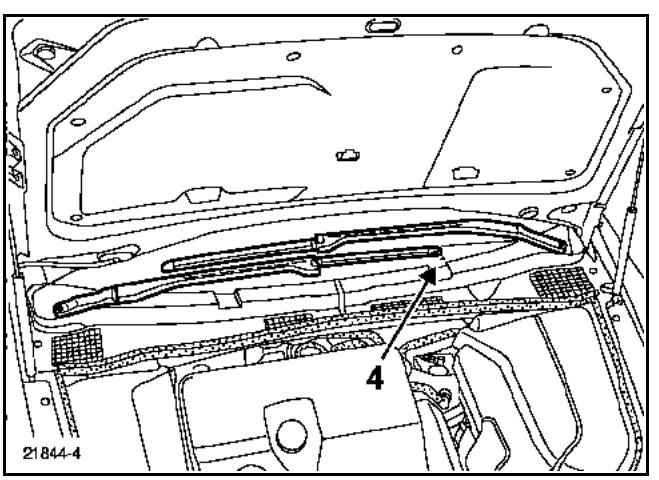

NOTE: to help distinguish between the two windscreen wiper arms, the left arm is more curved.

Fit:
– the upper arm (LH) parallel to the lower arm and tighten the nut to a suitable torque;
– the nut covers.

GETtheMANUALS.org

REMOVAL

Remove:

– the door trim (see **section 72A.A**);

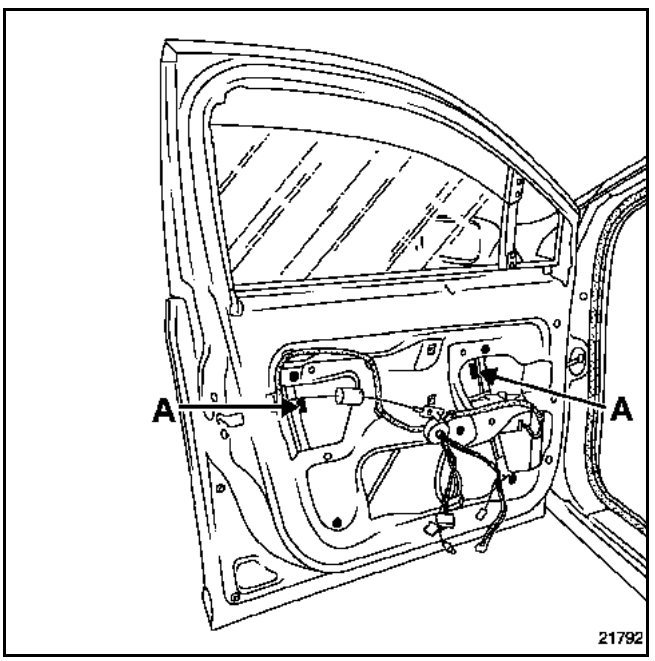

– the two window mounting clips (A).

Release the window from the window riser moving slide spindles,

Refit the glass at the bottom of the inner door shell.

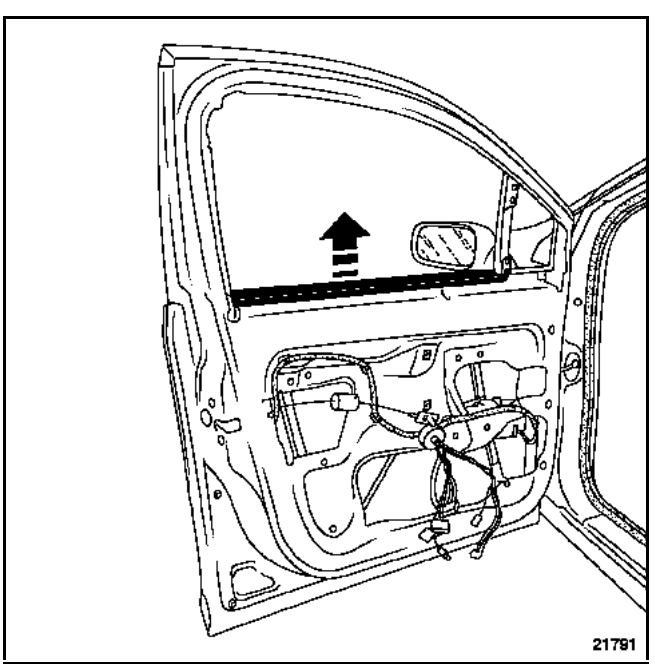

Release the interior weatherstrip.

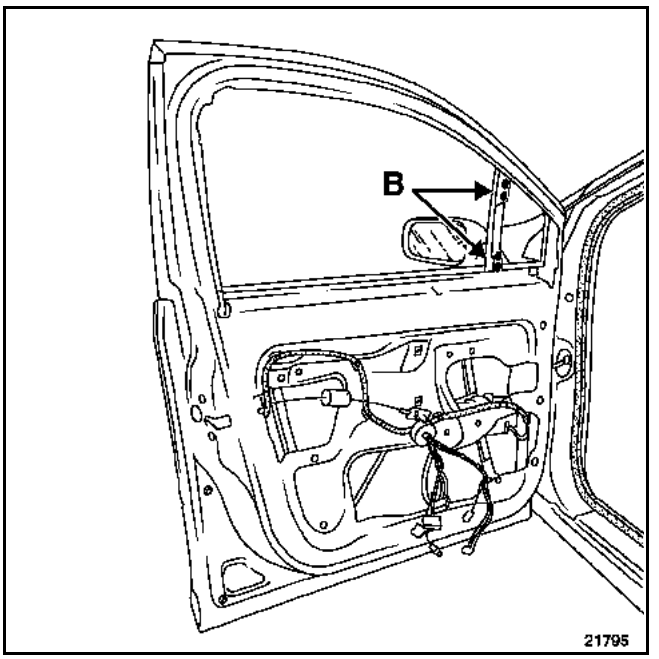

Remove the entire seal above the fixed upright glass run channel.

Remove the mountings (B).

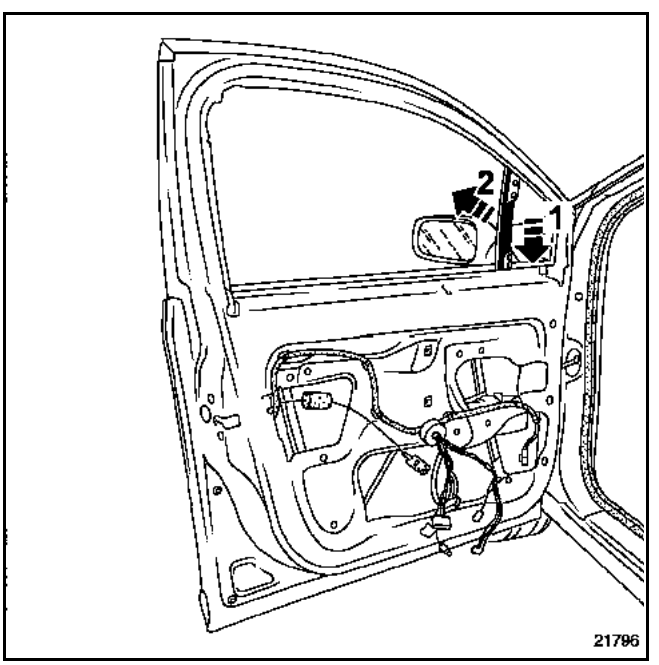

Release the fixed upright glass run channel at (1) then (2).

GETtheMANUALS.org

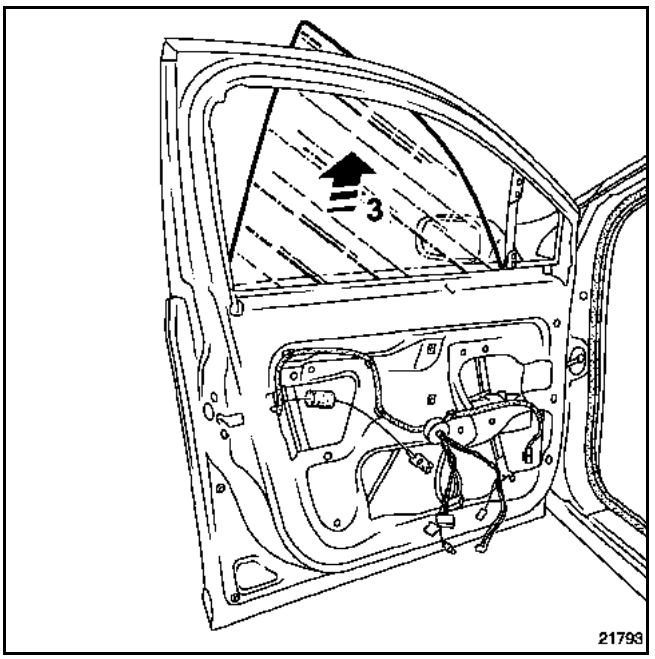

Remove window (3).

REMOVING THE FIXED WINDOW

NOTE: to remove the fixed window, the sliding window does not have to be removed.

Move the sliding window to the lowered position

Remove:
– the exterior door trim (front section) (see **section 56A.C**),
– the door seal (partially) (see **section 65A.A**).

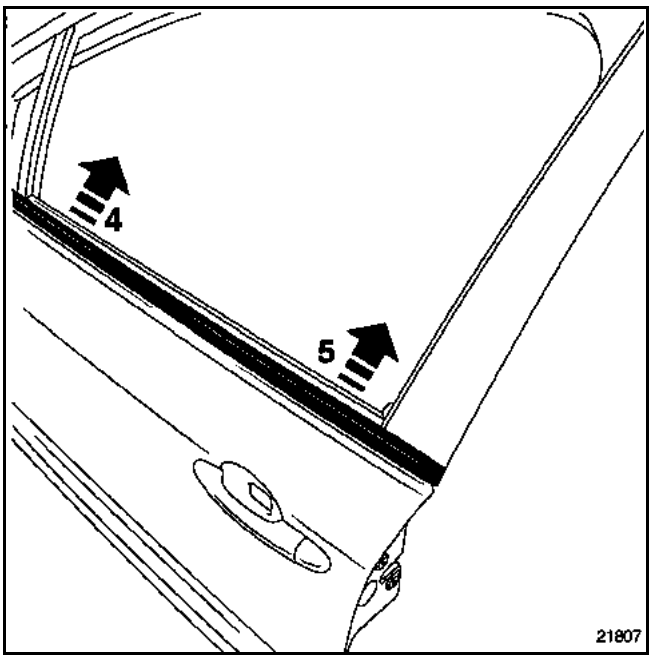

Using tool **Car. 1363** carefully remove the weatherstrip at (4) and (5).

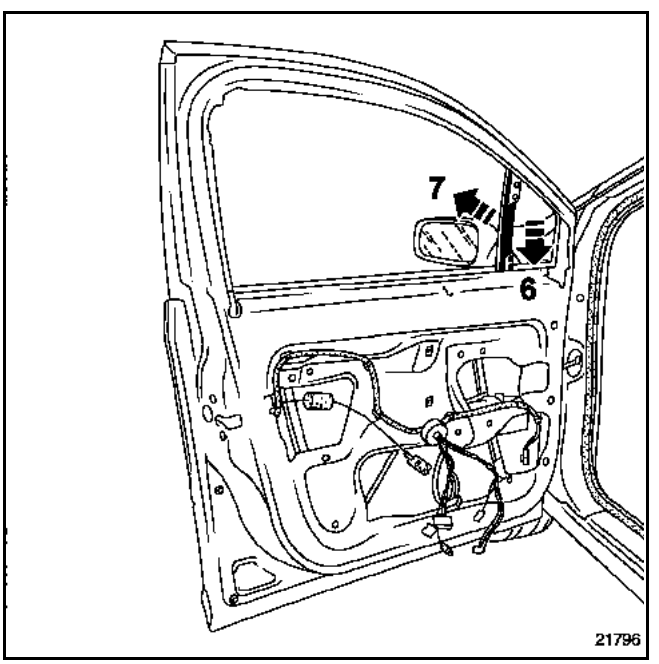

Remove the mounting bolts and the fixed upright glass run channel (6) and (7).

GETtheMANUALS.org

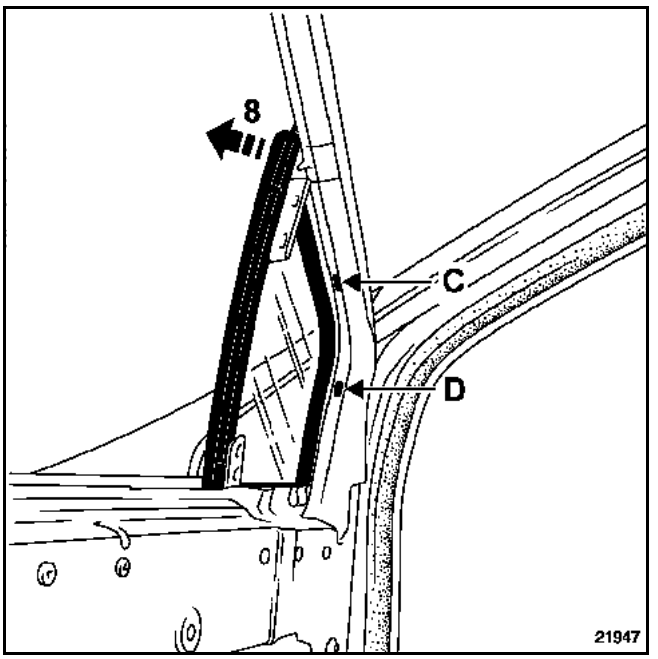

Remove the door frame interior trim (adhesive).

Using a flat screwdriver, release clips (C) then (D) pulling the upper section of the window away (8).

REFITTING

Before refitting the fixed window, check the condition of the mounting clips.

Replace the door frame interior trim (adhesive).

Proceed in the reverse order to removal.

GETtheMANUALS.org

REMOVAL

Remove:

– the door trim (**section 72A.B**),

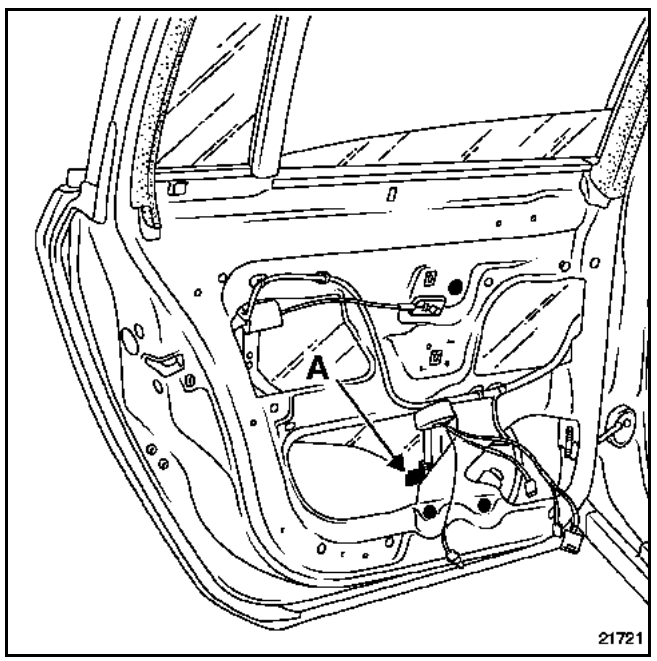

– window mounting clip (A), then release the window from the window riser moving slide spindle.

Refit the glass at the bottom of the inner door shell.

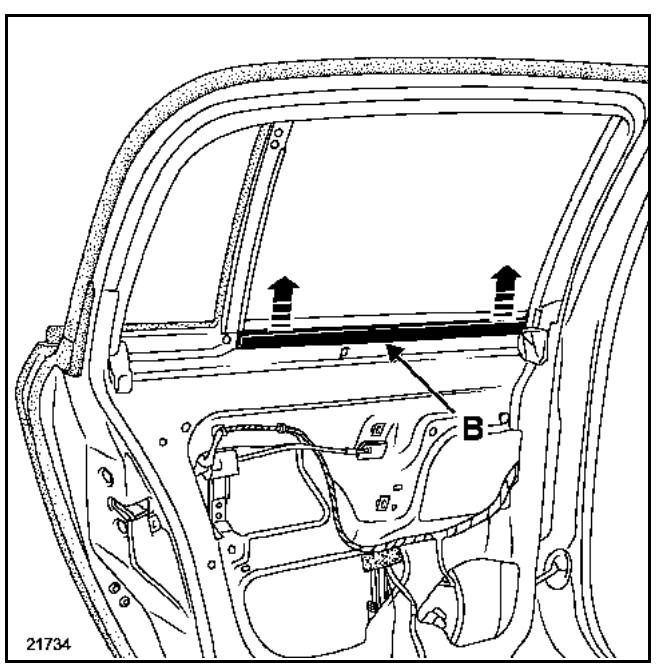

Remove the window interior weatherstrip (B).

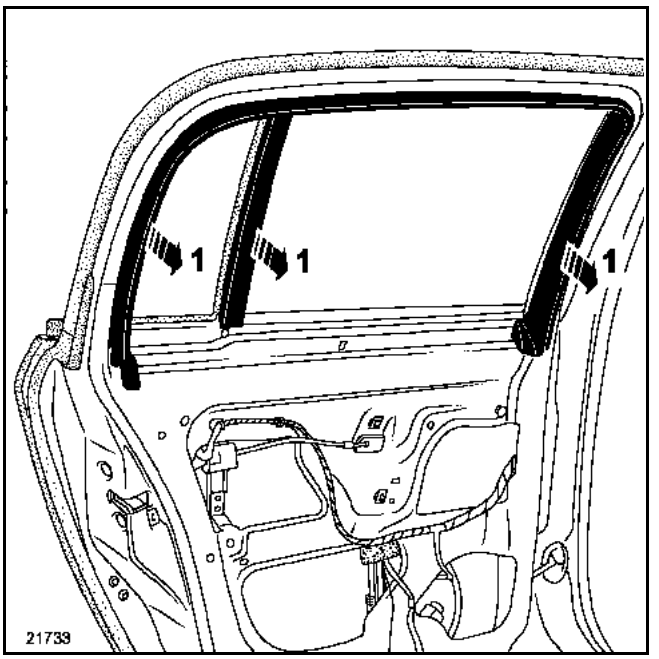

Unclip the door frame interior trim (1).

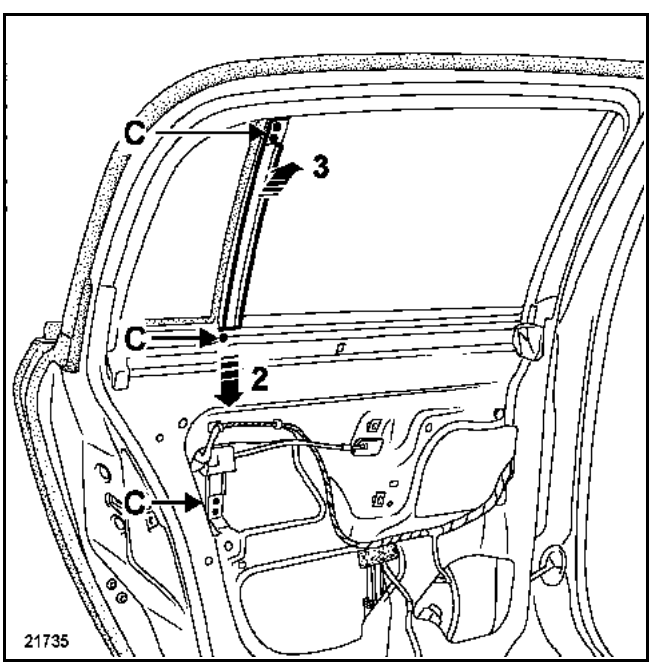

Partially remove the entire seal from the fixed upright glass run channel.

Remove the five fixed upright mounting bolts (C), then release at (2) and (3).

GETtheMANUALS.org

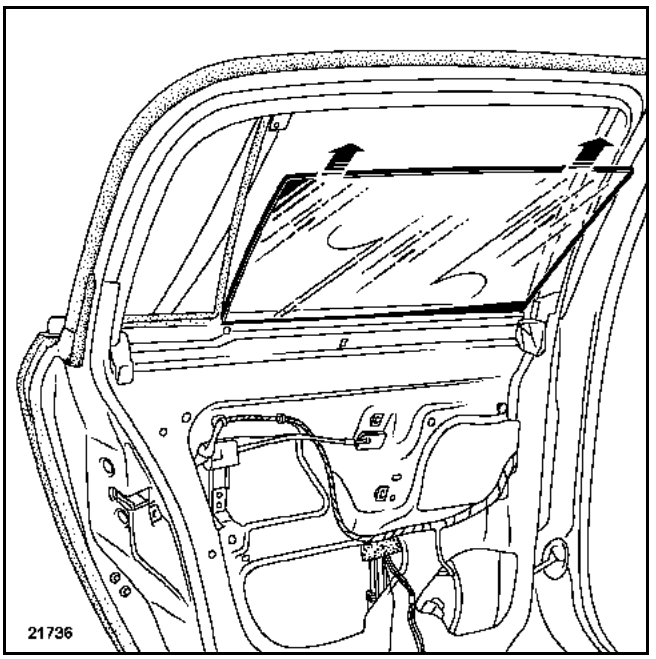

Release the window.

REMOVING THE FIXED WINDOW

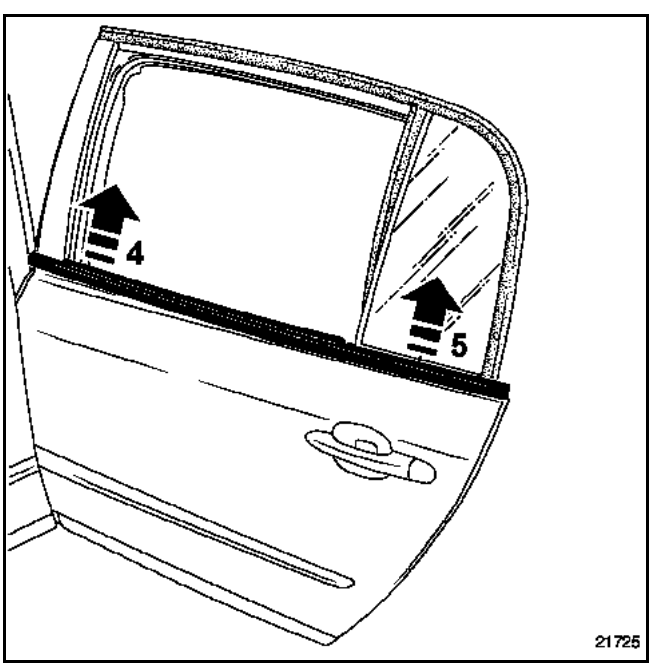

Using tool **Car. 1363** carefully remove the weatherstrip at (4) and (5).

Partially remove the exterior door frame seal (see **section 65B**).

Remove the door frame interior trim (adhesive).

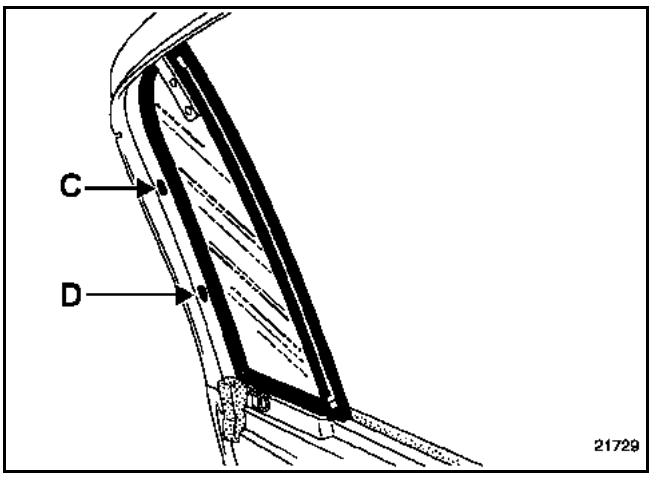

Using a flat screwdriver, apply pressure to the clip (C) then (D) pulling the upper section of the window away.

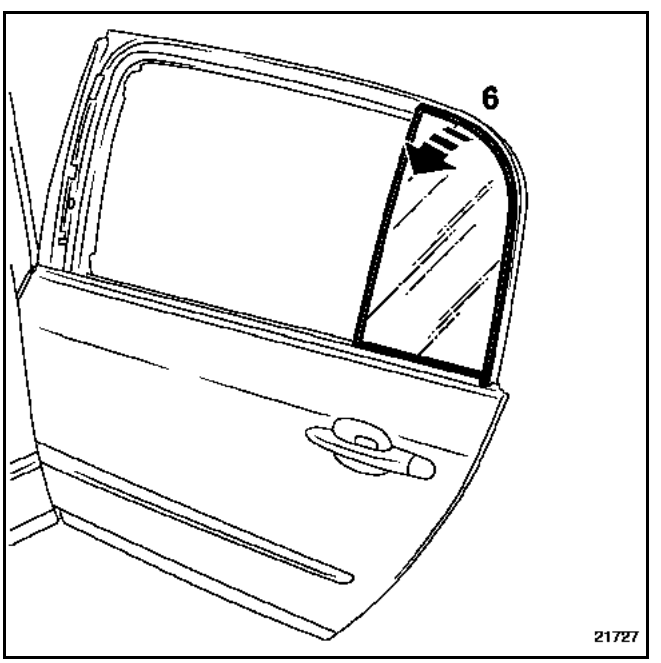

Remove the window (6).

GETtheMANUALS.org

REFITTING

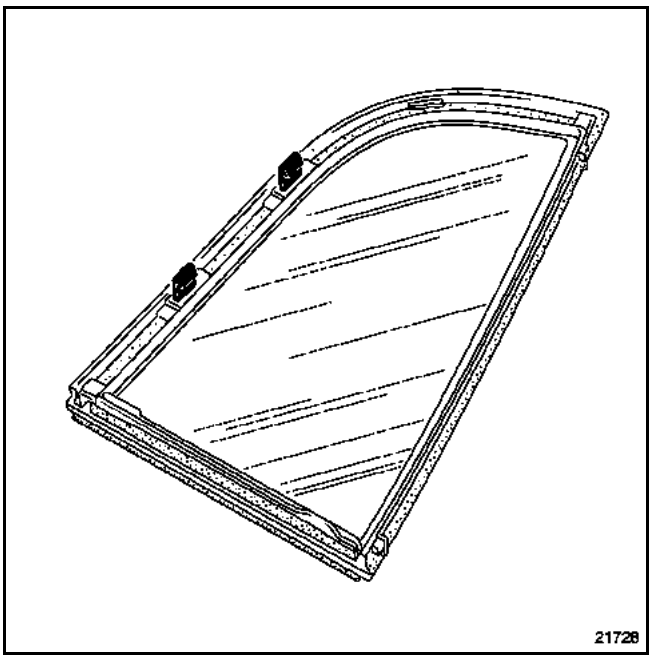

Before refitting the fixed window, check the condition of the mounting clips.

Replace the door frame interior trim (adhesive).

Proceed in the reverse order to removal.

GETtheMANUALS.org

SPECIAL TOOLING REQUIRED	
Ele. 1552	Tool for removing windscreen wiper arms

REMOVAL

NOTE: When it is replaced, the rear screen will be fitted with the frame seal, the two crosspieces and the central indexing dowel.

Remove the tailgate trim (see **section 73A.B**).

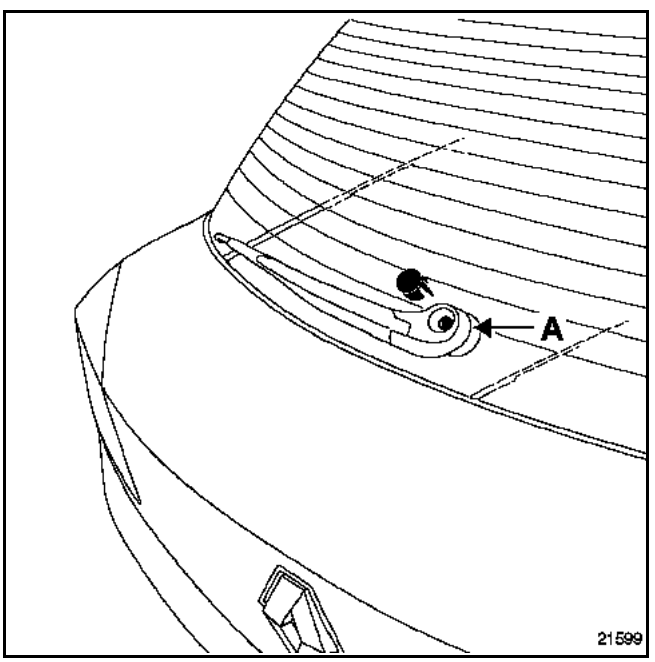

Unclip the cover by pressing the tab under the windscreen wiper arm (A).

Using the tool (**Ele. 1552**), remove the windscreen wiper arms.

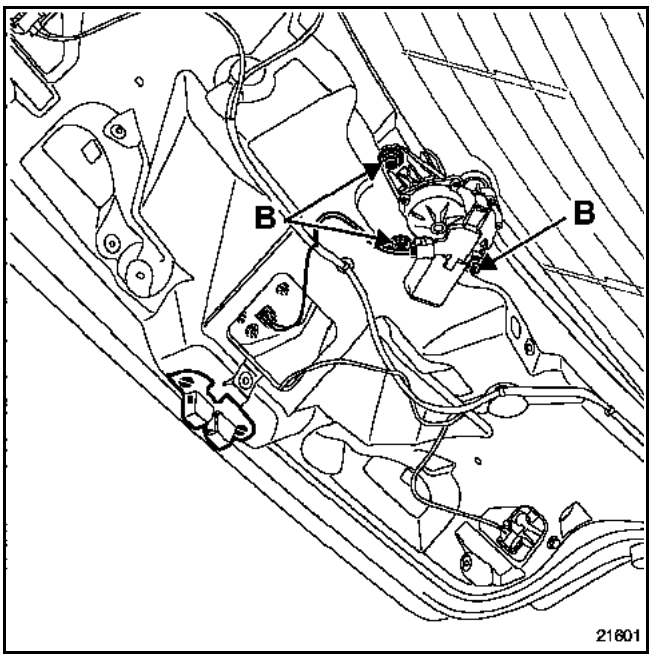

Disconnect the motor connector.

Remove the mountings (B), and release the motor.

Disconnect the de-icer connectors and attach the two discs to the rear screen.

Protect the window surround with masking tape.

NOTE: prepare the cutting wire and two tension handles.

GETtheMANUALS.org

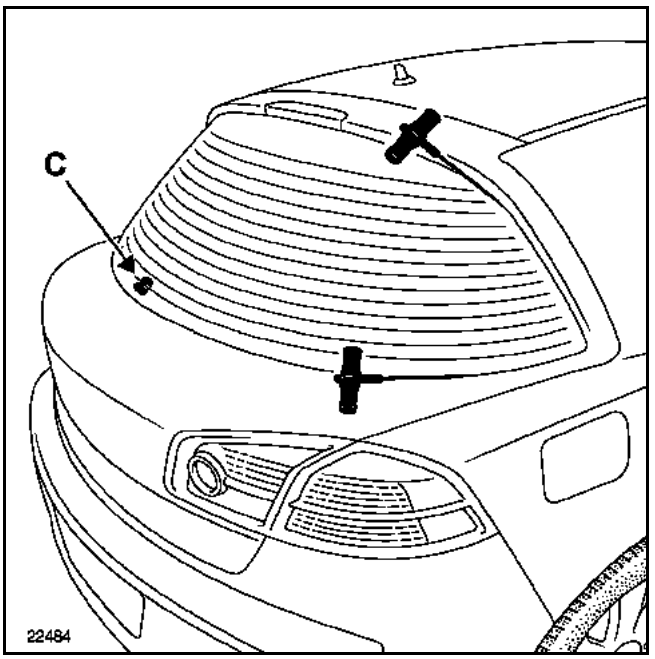

Feed the cutting wire through the rear screen angle taking care to slide it under the lip moulding.

Cut the glue bead (**two people required**).

NOTE: when cutting the glue bead, watch out for the indexing guide (C) which will create some resistance.

REFITTING

See Technical Note **560 A for information on preparation and bonding**.

CAUTION: it is essential to use a high tensile adhesive for gluing windows.

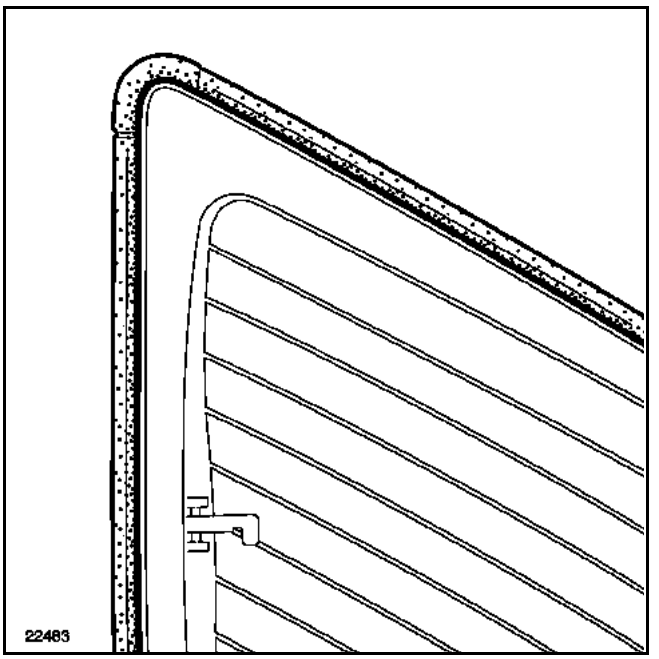

After leveling off the glue bead and cleaning the rear screen, glue the surround seal starting with the angles.

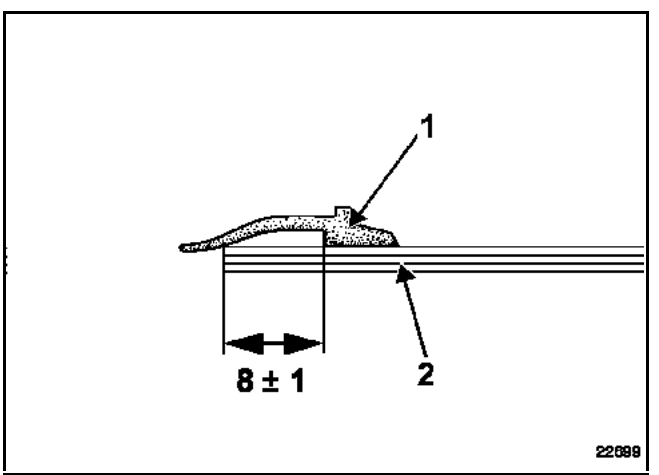

Keep to the following gluing distance between the rear screen flange and the gluing area (**8 ± 1 mm**).

1 Frame joint
2 Rear screen

GETtheMANUALS.org

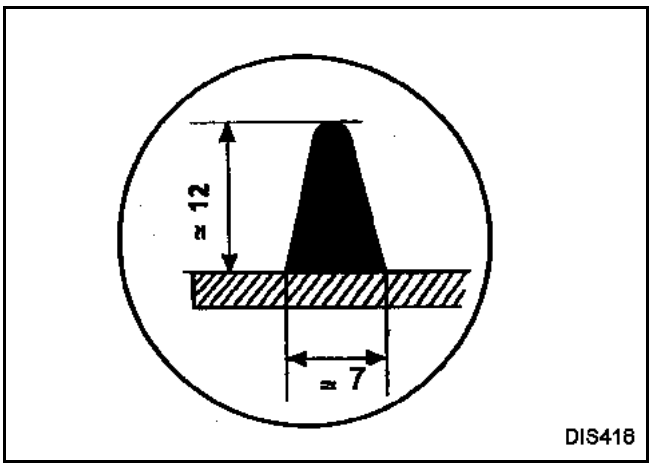

Keep to the size of the glue bead.

Glue the rear screen in place (**two people required**).

Place three cross pieces on the lower section (**3 mm** thick) to distribute the gap to either side.

Strap the rear screen if necessary.

SPECIAL NOTES ON REFITTING THE WINDSCREEN WIPER MOTOR

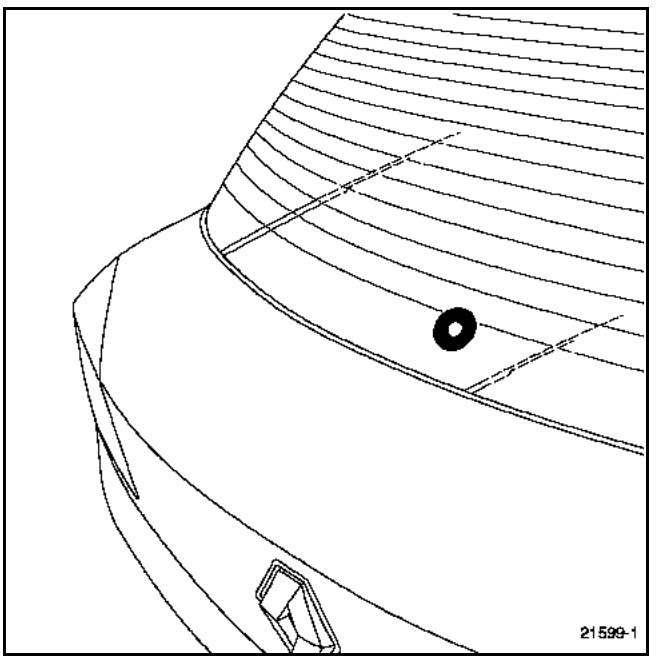

It is essential to replace the seal every time the motor is removed.

After fitting the motor, check that it is in stop position.

Clean the motor shaft splines.

Affix the windscreen wiper arms to the rest position with a new nut

TIGHTENING TORQUES (in Nm)	▽
Windscreen wiper motor nuts	**8**
Windscreen wiper arm nuts	**12**

GETtheMANUALS.org

REMOVAL

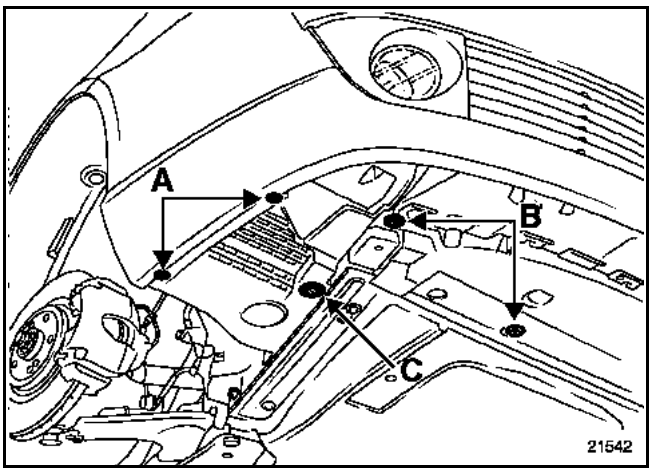

Remove:
– the bolts (A) and (B);
– the clip (C);

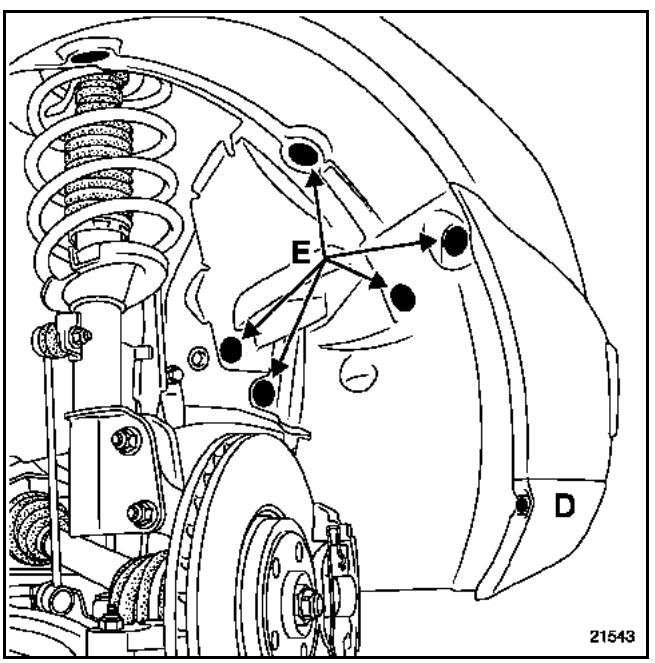

– the bolt (D),
– the clips (E), then partially release the wing interior protector;

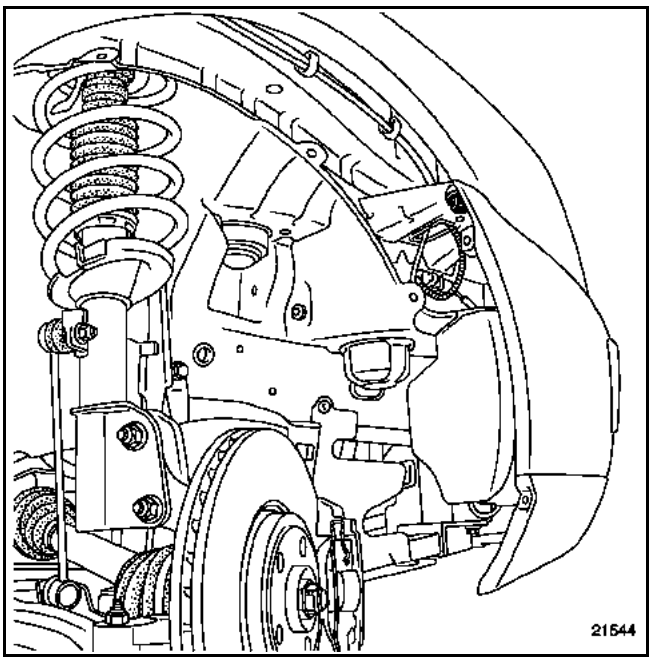

– the side bolt.

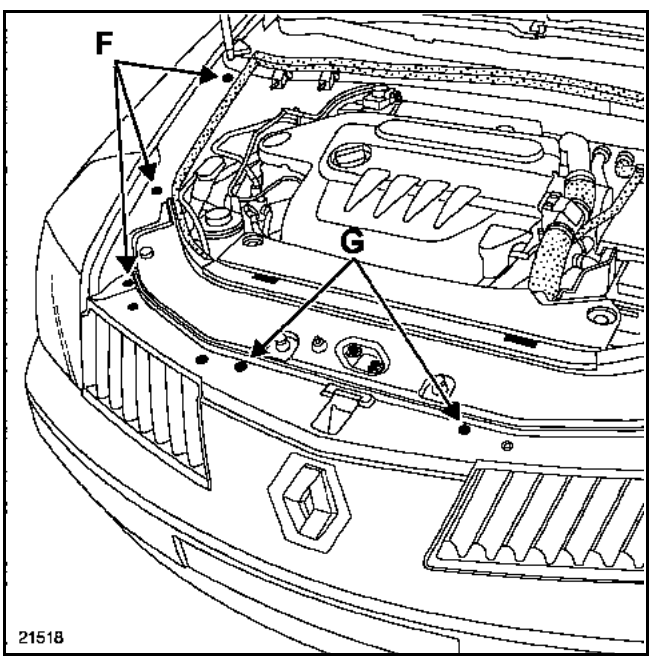

Unclip:
– the clips (F), then release the wing interior trim;
– the clips (G).

GETtheMANUALS.org

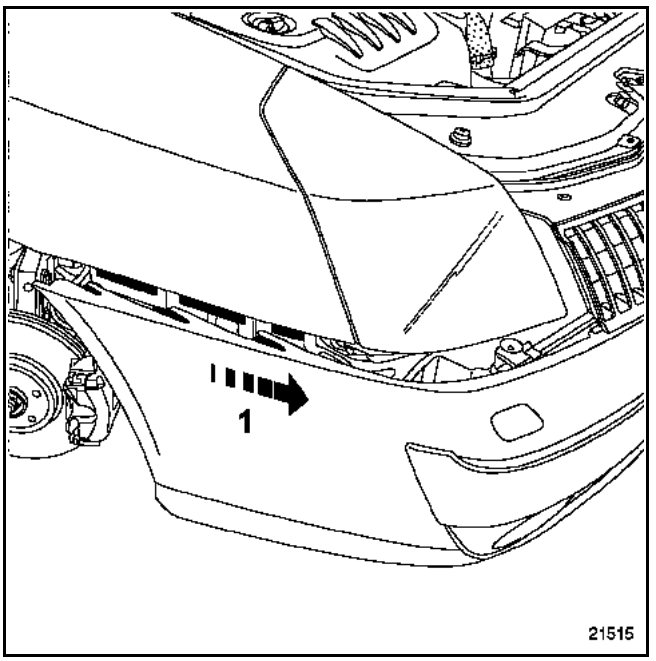

Partially release the bumper (1).

Disconnect:
– the foglight connectors;
– the power supply to the headlight washer jets.

DISMANTLING

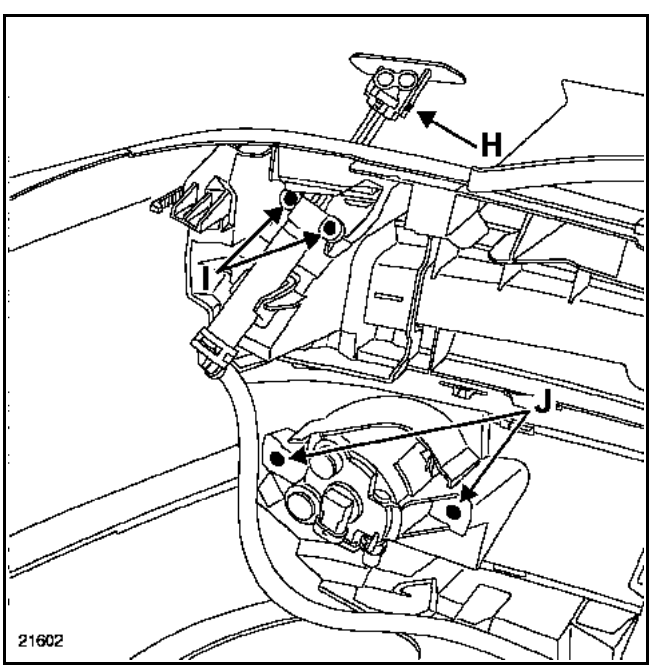

Lift the jet manually, then unclip the trim at (H).

Remove:
– the bolts (I) and disconnect the water pipe;
– the bolts (J) and withdraw the foglight;

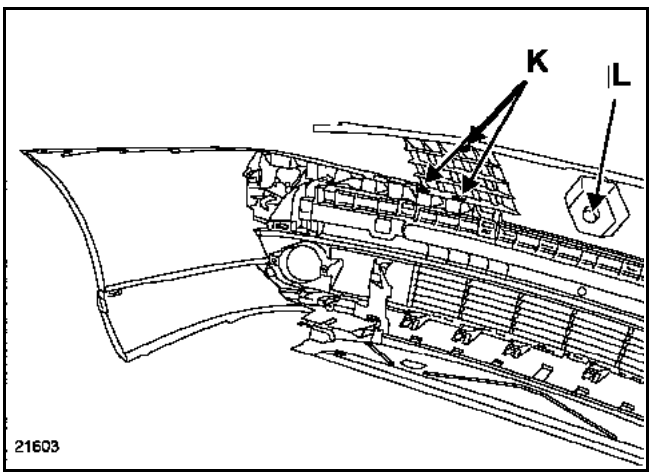

Grind the two pins, then release the badge.

Release the clips (K), then withdraw the grille.

Special requirement for refitting the badge

Reweld the two pins or screw in the badge through the aperture provided for the purpose (L).

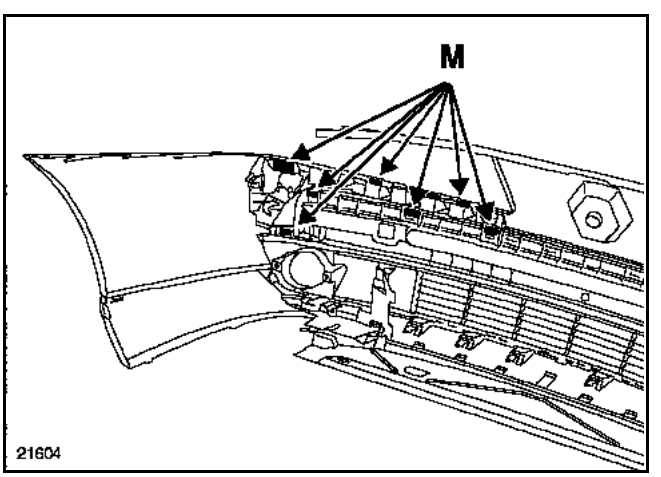

Remove the clips (M), then withdraw the absorber;

GETtheMANUALS.org

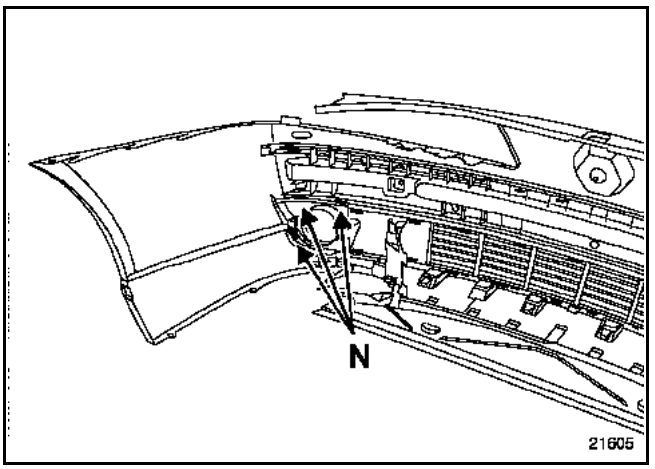

– the clips (N), then release the foglight trim;

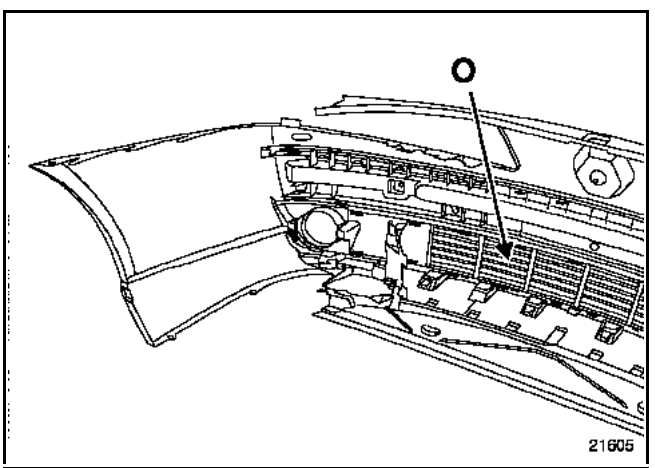

– the clips (O), then withdraw the grille;

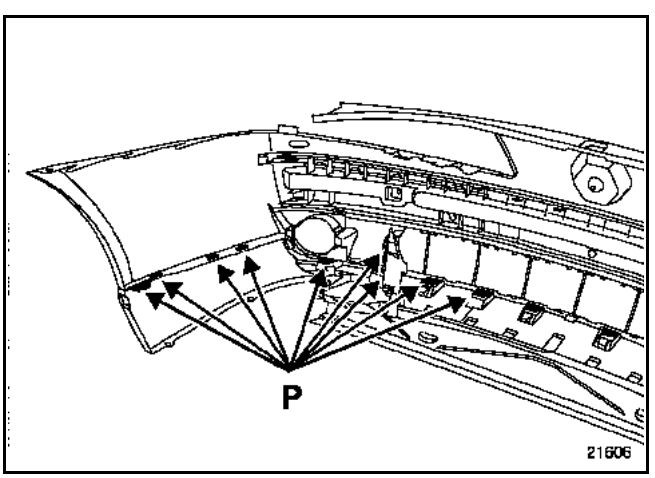

– the fasteners (P), and withdraw the lower trim strip.

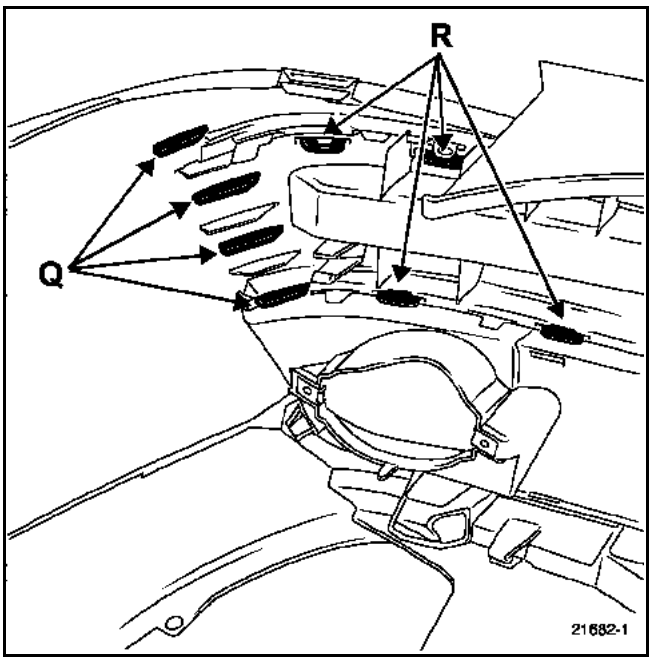

IMPORTANT: to remove the protective inset, it will be necessary to grind the four tabs (Q), then unclip the fasteners (R).

REFITTING THE PROTECTIVE INSET

NOTE: the following method applies when removing/ refitting the protective inset.

Position the protective inset and clip the fasteners (R).

Weld or clip (with a pig's snout clip) the four tabs (Q) (see above).

GETtheMANUALS.org

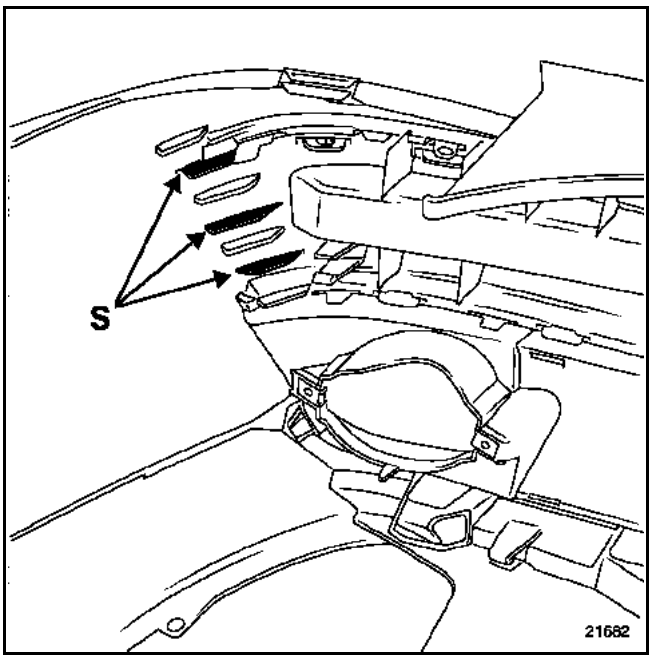

IMPORTANT: to reinforce the protective inset fastening on the bumper, weld or clip (with a pig's snout clip) the three tabs (S).

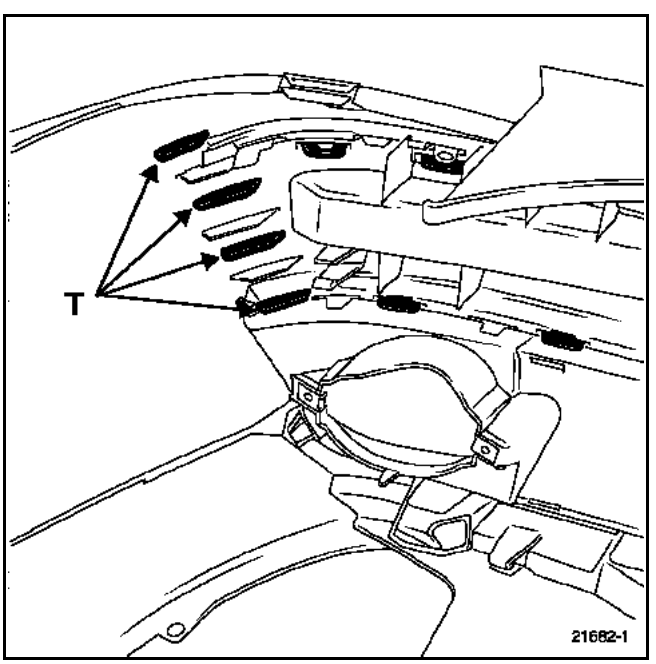

NOTE: when replacing the protective inset, weld or clip (with a pig's snout clip) only the four tabs (T).

SPECIAL REQUIREMENT FOR REFITTING THE BUMPER

NOTE: two operators are needed for refitting.

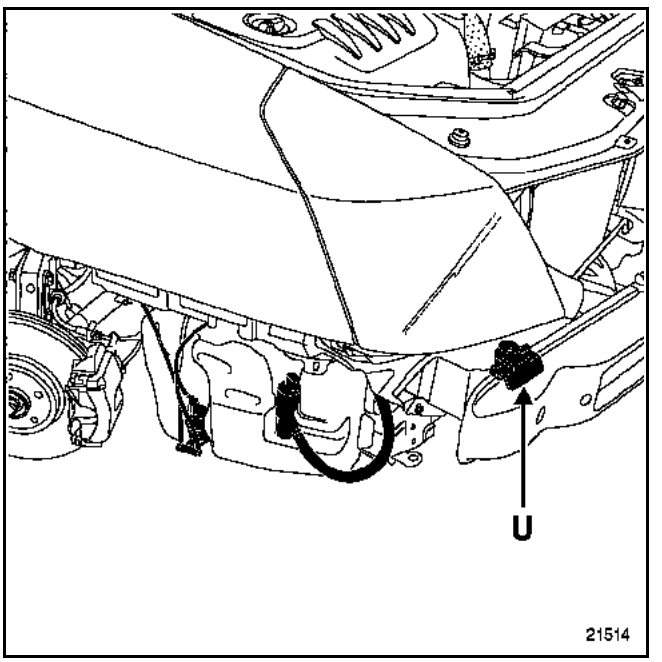

Before refitting the bumper, check that the guide plates (U) are in sound condition.

Connect the headlight washer hose and the foglight connectors.

Proceed in the reverse order to removal.

GETtheMANUALS.org

REMOVAL

Remove:
– the rear lights;

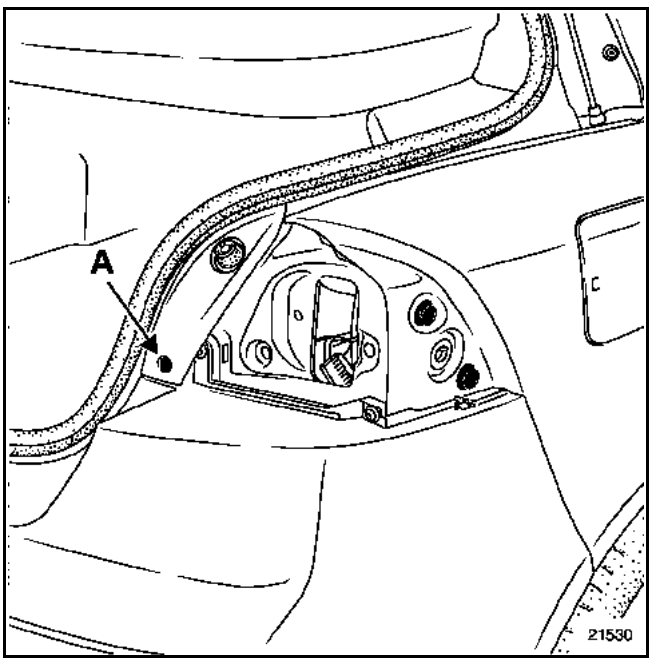

– the clip (A), then lift the trim slightly;

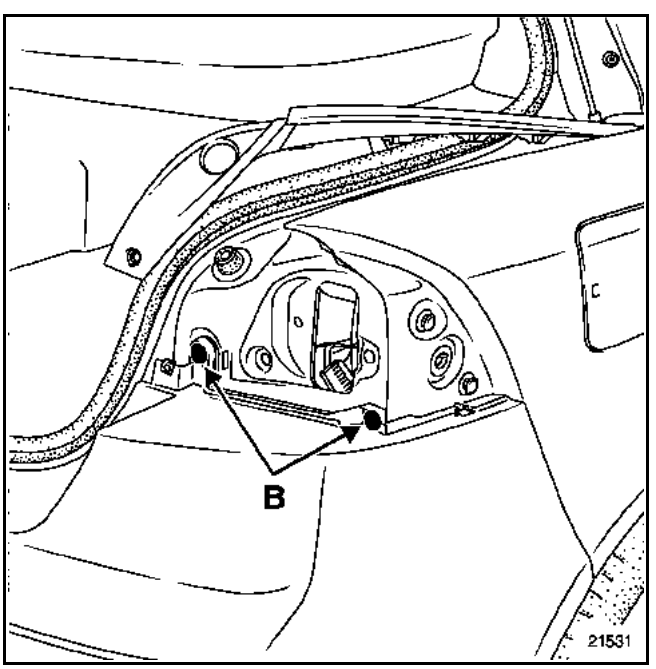

– the upper bolts (B);

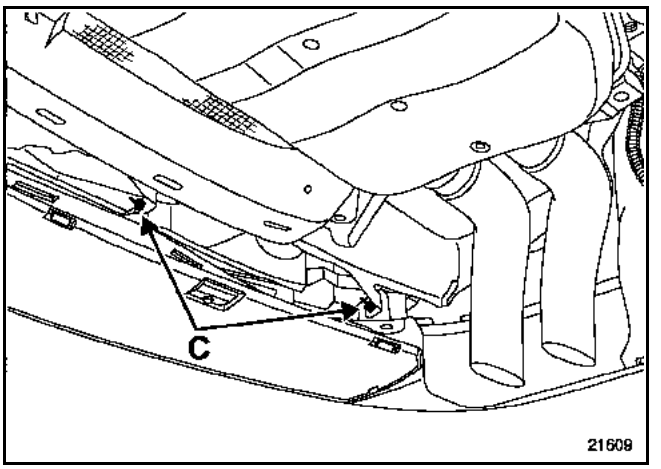

– the lower clips (C);

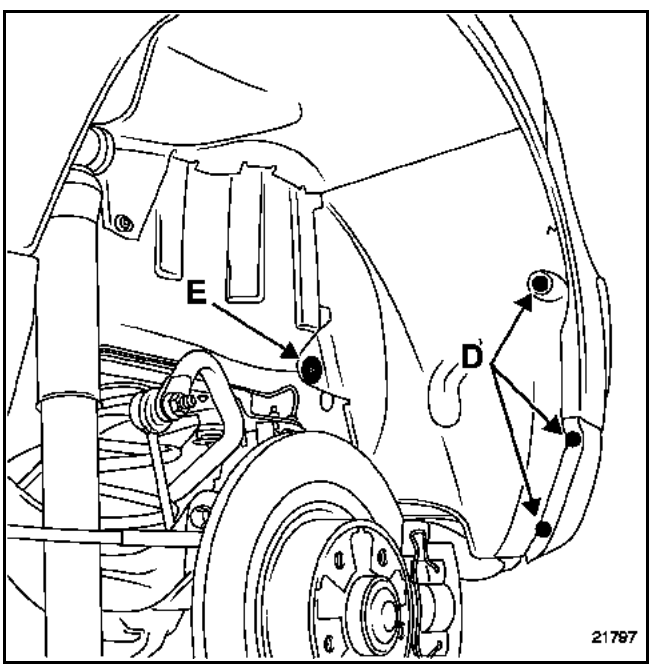

– the two side mounting bolts (D) (**Star T20**);
– the clips (E) (with the clip removal pliers).

Partially release the wing interior protector.

GETtheMANUALS.org

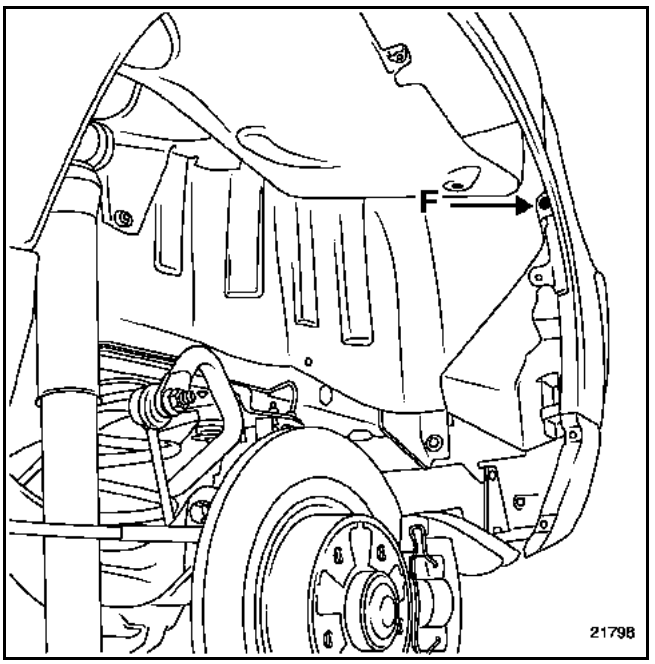

Remove the side interior bolt (F), then partially release the bumper.

Disconnect the number plate and proximity sensor supply connectors (if fitted).

DISMANTLING

Remove the interior wiring harness.

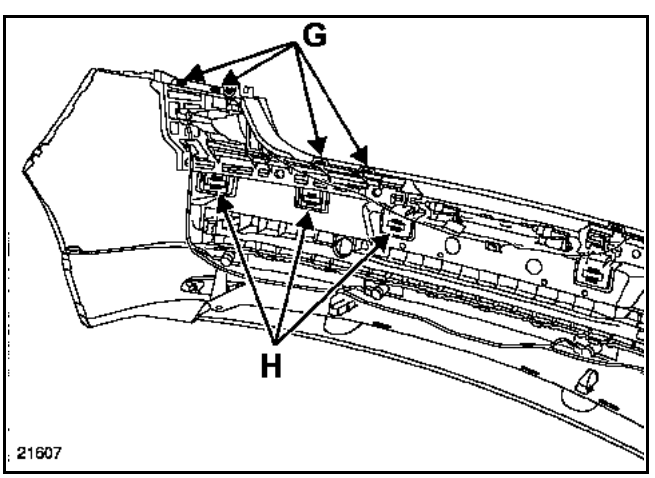

Separate the upper section of the absorber (G).

Unclip the lower section (H).

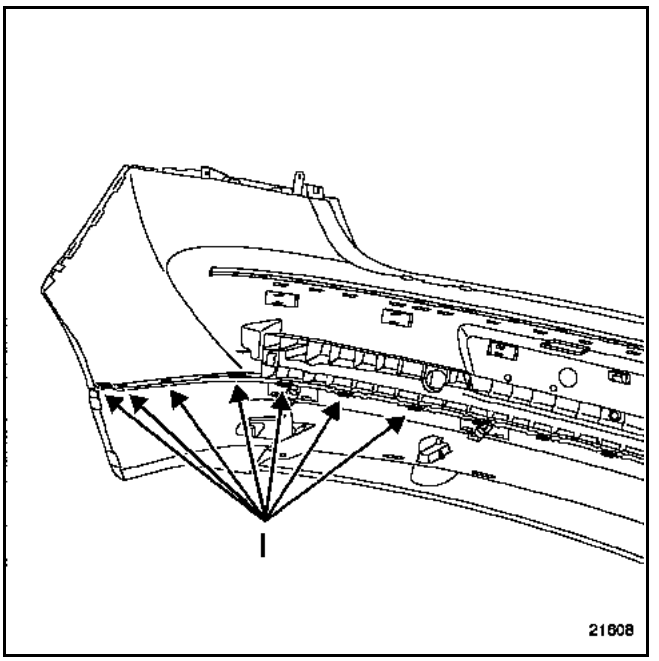

Release the fasteners (I), then remove the lower trim strip.

REMOVING THE PROTECTIVE INSET

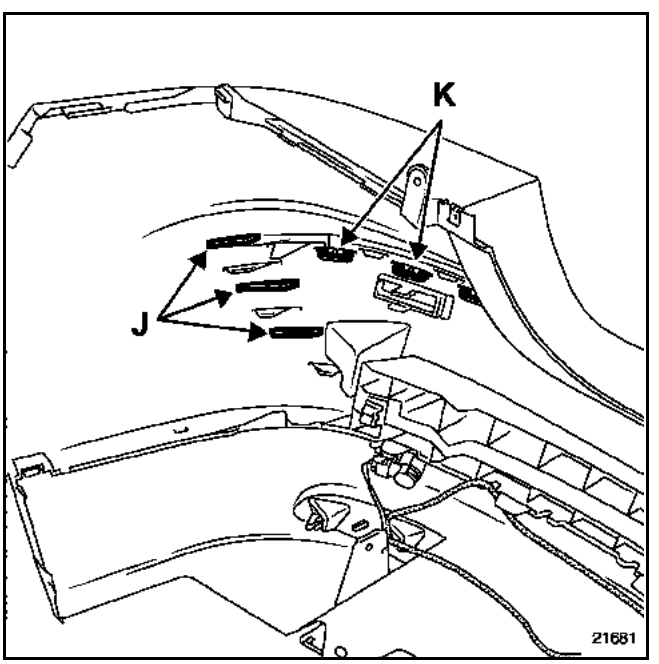

IMPORTANT: to remove the protective inset, it will be necessary to grind the tabs (J), then unclip the fasteners (K).

GETtheMANUALS.org

REFITTING THE PROTECTIVE INSET

NOTE: the following method applies when removing/ refitting the protective inset.

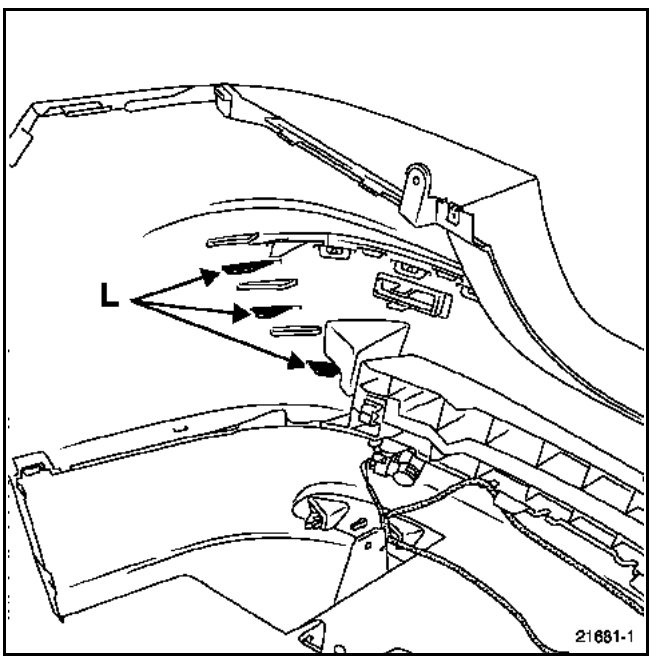

IMPORTANT: to reinforce the protective inset fastening on the bumper, weld or clip (with a pig's snout clip) the three tabs (L).

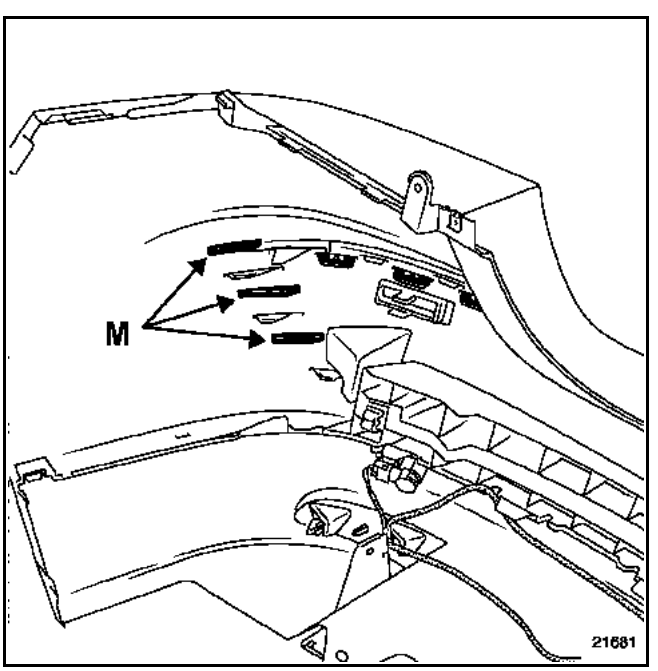

IMPORTANT: when replacing the protective inset, weld or clip (with a pig's snout clip) only the three tabs (M).

GETtheMANUALS.org

REMOVING THE FRONT DOOR MOULDINGS

Method One

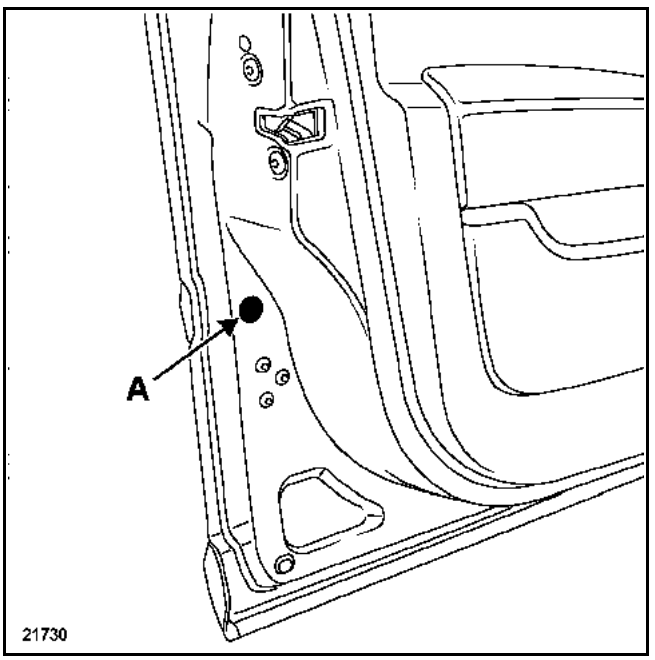

Remove the blanking plate (A), then press on the lock catch with a screwdriver.

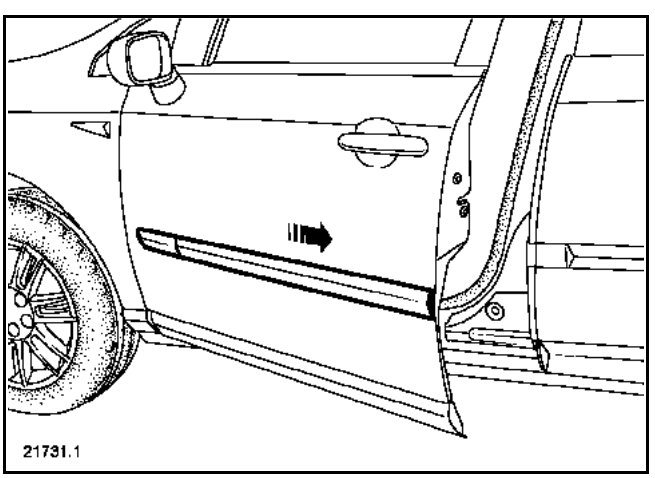

Slide the moulding towards the rear of the vehicle.

Method Two

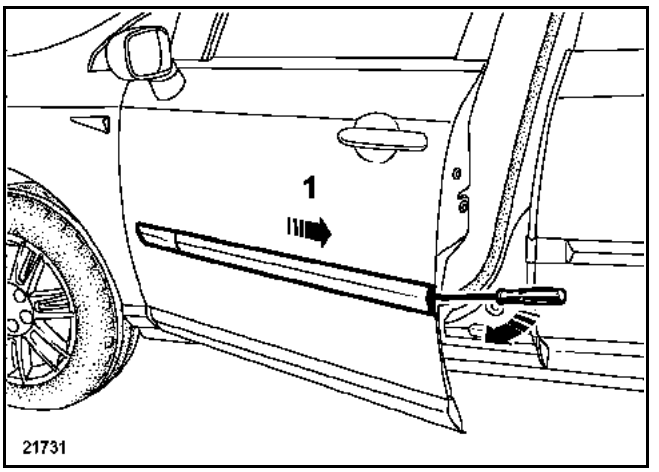

Protect the door rabbet (masking tape).

Insert the tool (**Car. 1597**), then exert pressure on the tool to release the moulding (1).

GETtheMANUALS.org

REMOVING THE FRONT DOOR LOWER MOULDING

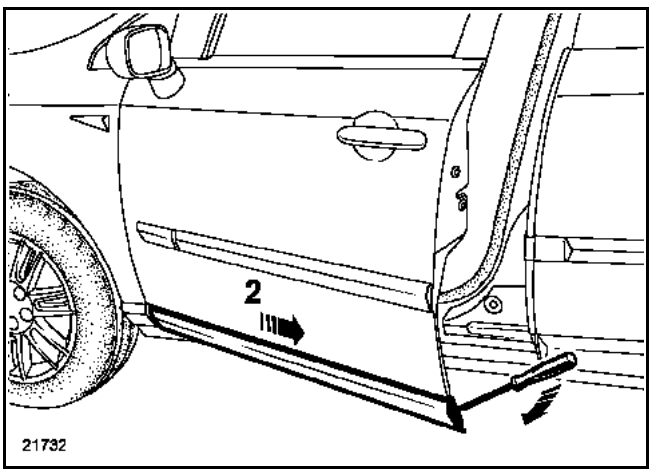

Insert the tool (**Car. 1597**), then exert pressure on the tool to release the moulding (2).

Extricate the seal from the lower rabbet of the door.

REMOVING THE REAR DOOR UPPER MOULDING

NOTE: use one of the two methods for removing the front door moulding.

The blanking plate and the opening for access to the locking catch are located in the front section of the rear door.

Slide the moulding towards the front of the vehicle.

REMOVING THE REAR DOOR LOWER MOULDING

The method is the same as for the front door moulding.

REFITTING

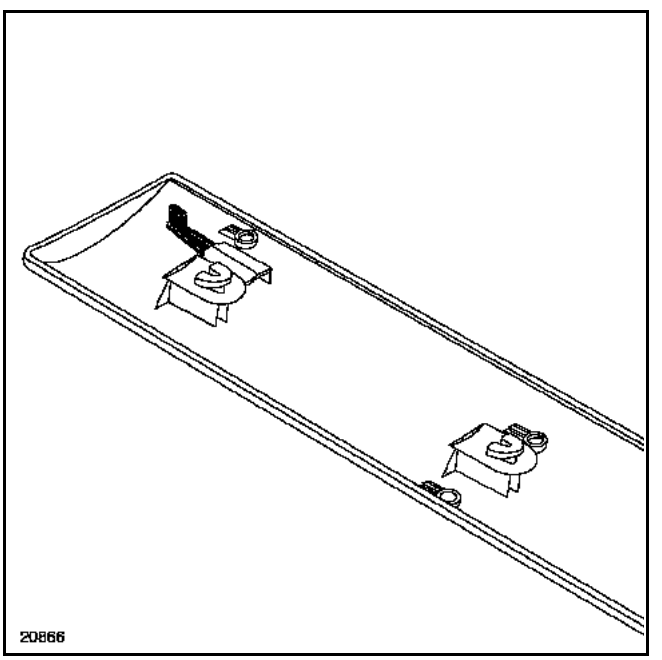

IMPORTANT: before refitting the mouldings, it will be necessary to pull the locking catches out slightly.

GETtheMANUALS.org

REMOVAL

NOTE: it is possible to remove the radiator grille without removing the bumper.

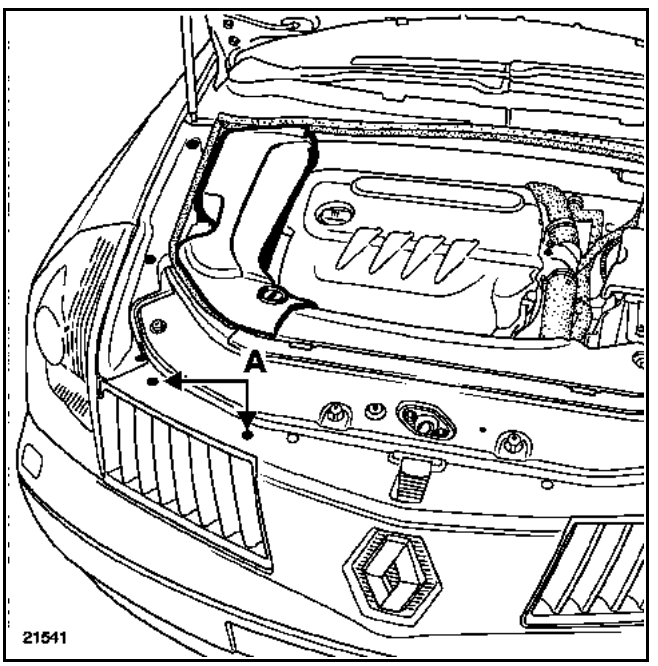

Remove the mountings (A).

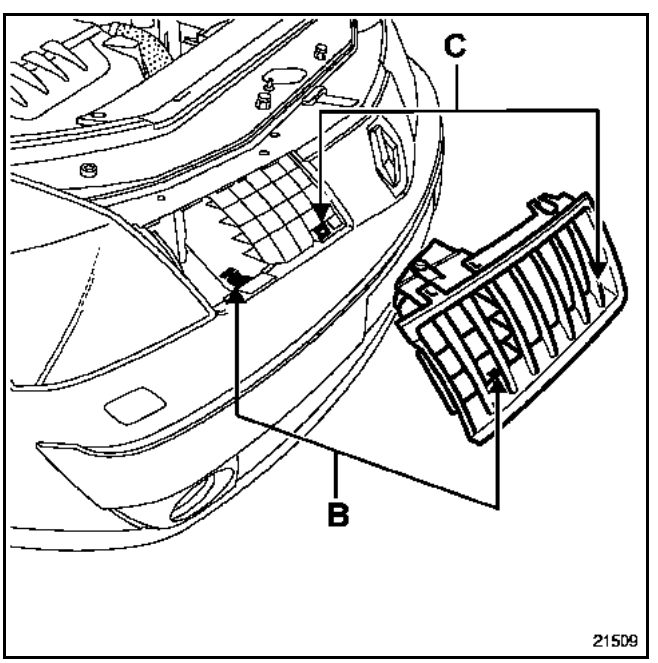

Extricate the radiator grille by pressing on the two bolts (B) and (C).

REFITTING

Proceed in the reverse order to removal.

GETtheMANUALS.org

REMOVAL

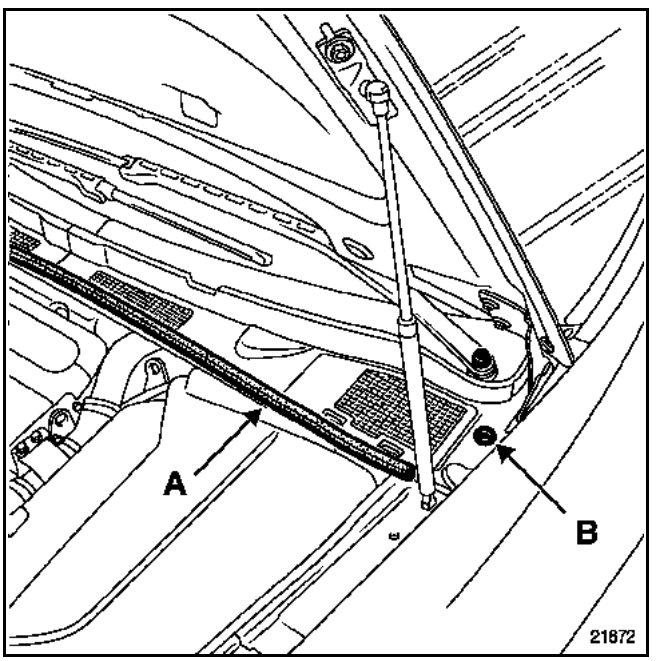

Using the tool (**Elé. 1552**), remove the windscreen wiper arms.

Remove:
– the plenum chamber seal (A);
– the clip (B).

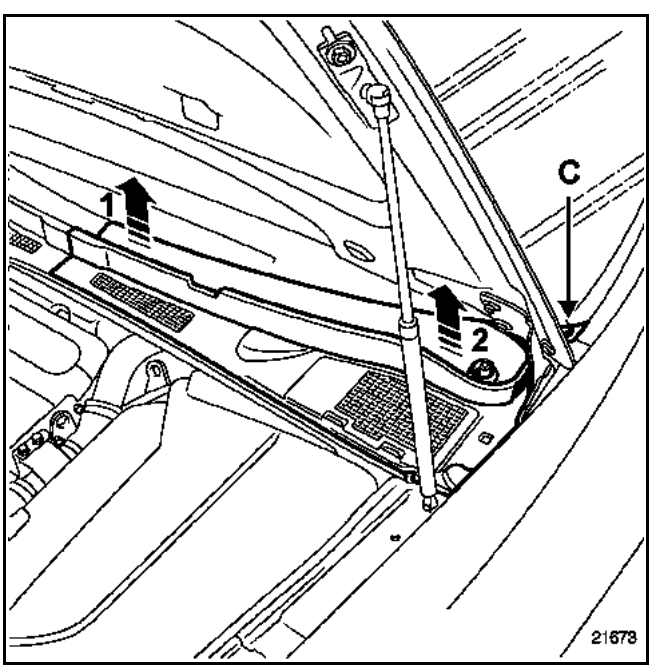

Unscrew by a 1/4 turn the clip (C).

Raise slightly the half-grille (1); pull the half-grille out toward the front of the vehicle, to release the retaining clips located under the windscreen.

Withdraw the half-grille (2).

Proceed in the same way for the right-hand half grille.

REFITTING

IMPORTANT: clean the windscreen and scuttle grilles before refitting.

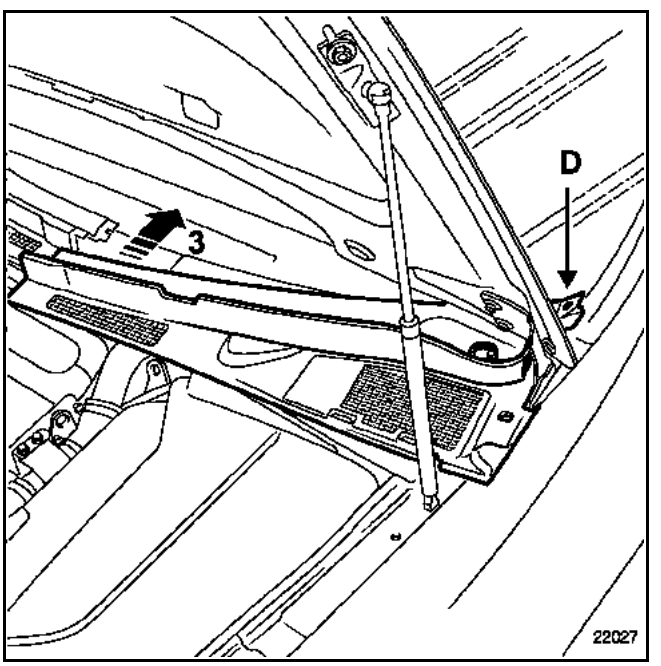

Engage the half grille in the wing pin (D).

Slide the half-grille (3) so that the retaining clips are positioned under the windscreen.

IMPORTANT: avoid having the retaining clips come into contact with the windscreen rabbet.

Proceed in the same way for the left-hand grille.

Check that the scuttle grille is attached to the windscreen.

GETtheMANUALS.org

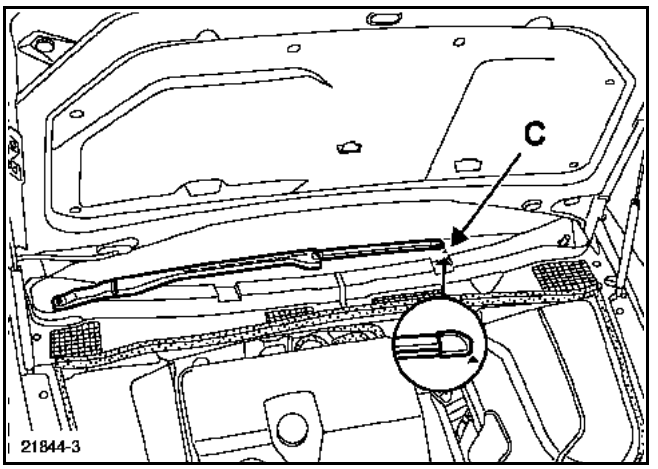

Rest the RH windscreen wiper arm on the windscreen reference point (C), and position the LH windscreen wiper arm parallel to the RH windscreen wiper arm.

Arm tightening torque (12 Nm ± 15%).

GETtheMANUALS.org

REMOVAL

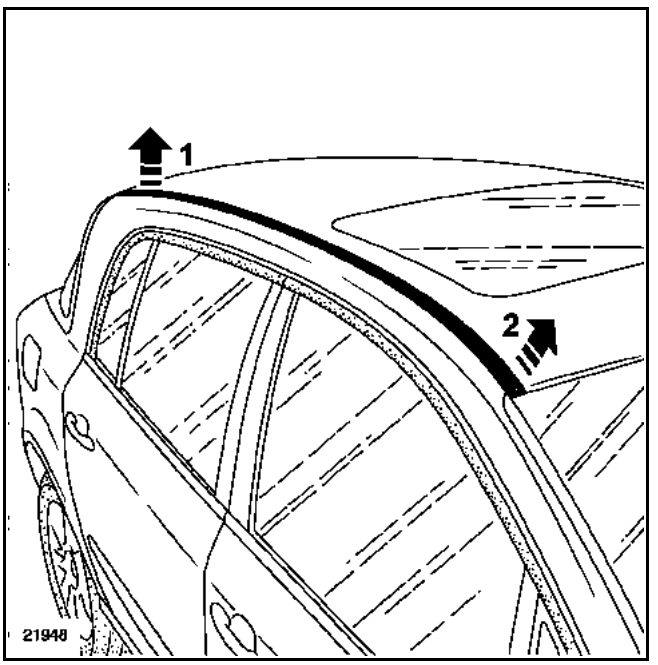

Protect the trim surround (masking tape).

Unclip the trim over its entire length (1) then (2).

REFITTING

Before fitting:
– Check condition of retaining clips;
– Position the clips on the trim.

Clip the trim.

GETtheMANUALS.org

REMOVAL

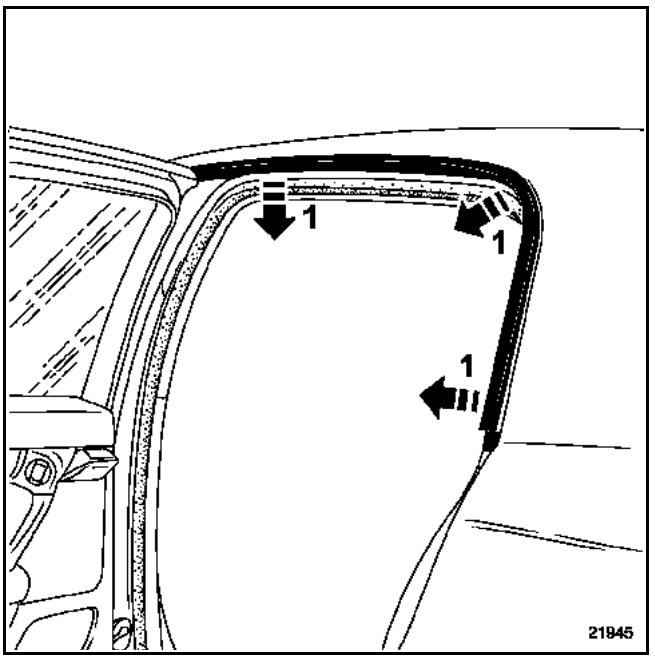

Using the tool (**Car. 1363**), unclip the trim (1).

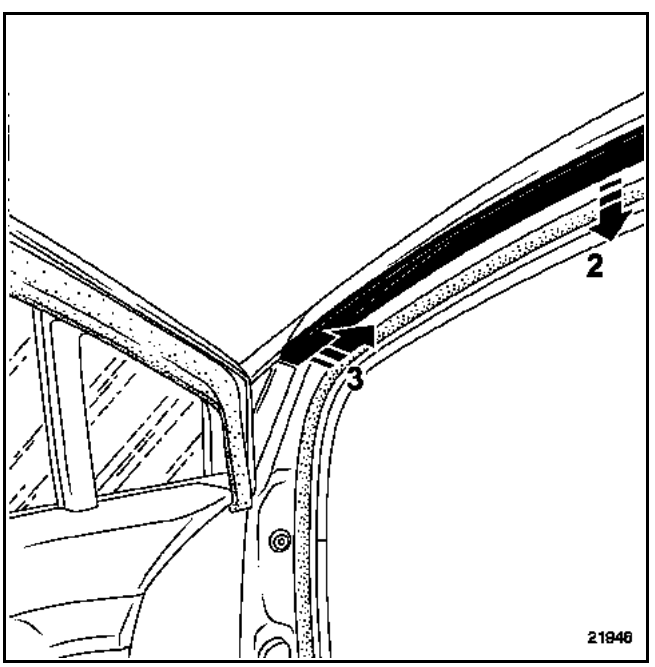

Unclip trim (2).

Remove trim (3).

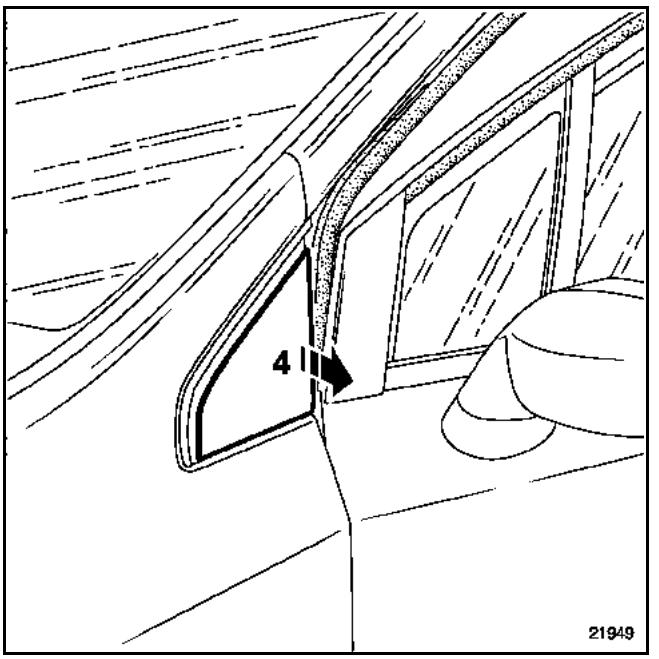

Unclip the front wing trim (4).

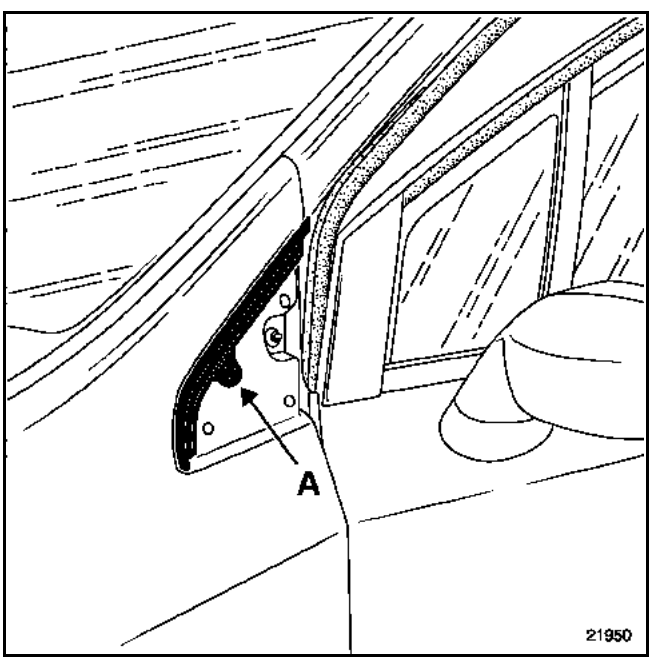

Remove clip (A).

Release the chrome strip.

REFITTING

Before refitting the trims, the retaining clips will have to be replaced.

GETtheMANUALS.org

REMOVAL

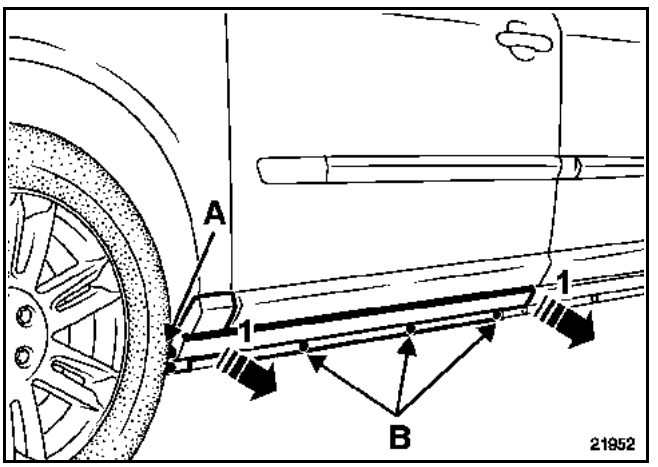

Remove:
– the bolt (A);
– the clips (B).

Open the door; unclip the front sill half-panel at the door entrance level; release the sill panel (1).

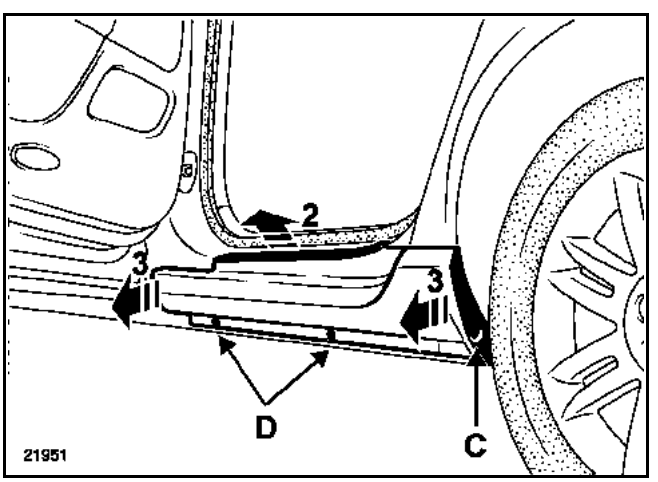

Remove:
– the bolt (C);
– the clips (D).

Release the rear sill half-panel (2) and (3).

REFITTING

Replace the mounting clips; position the clips on the two sill half-panels.

Proceed in the reverse order to removal.

GETtheMANUALS.org

REMOVAL

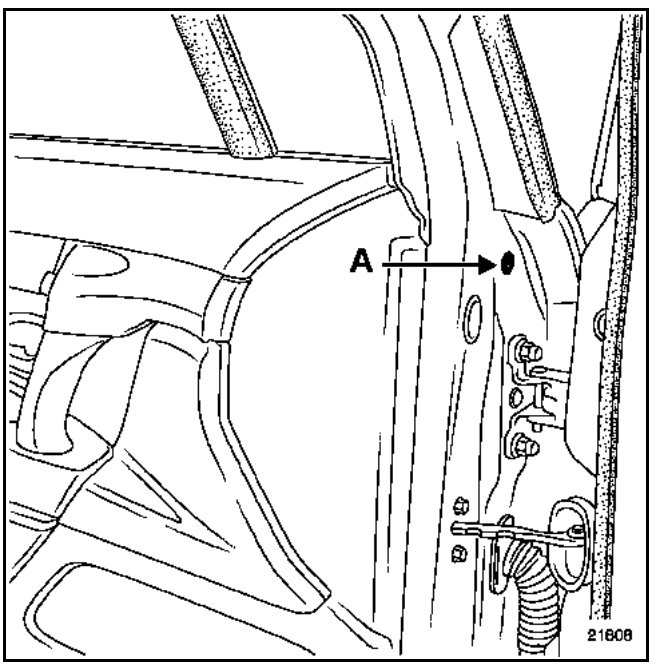

Remove the blanking cover and tamper proof bolt (A).

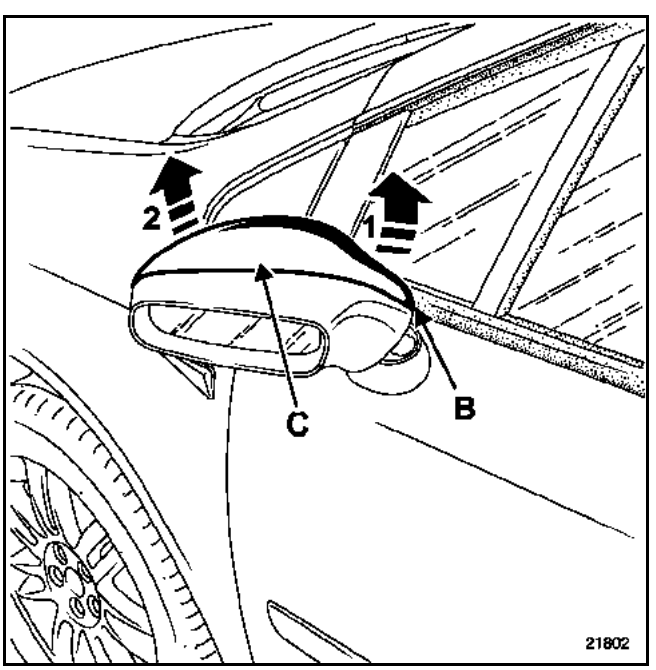

Face the door mirror forwards.

Put a finger in lower opening (B).

Disengage the shell casing at (1); press gently at (C); disconnect the shell casing at (2).

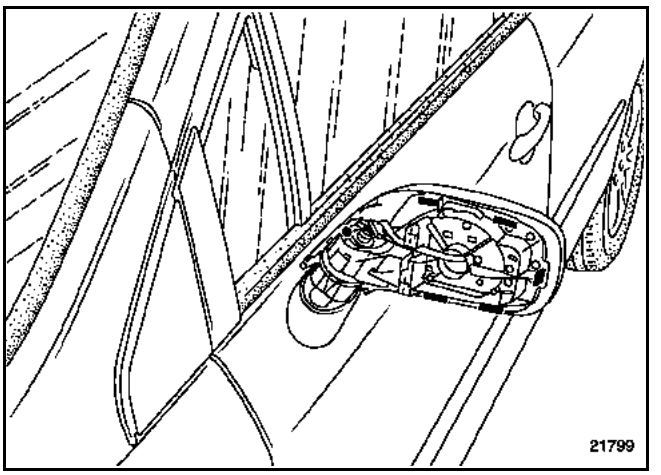

Release the clips.

Carefully remove the skirt framing the mirror.

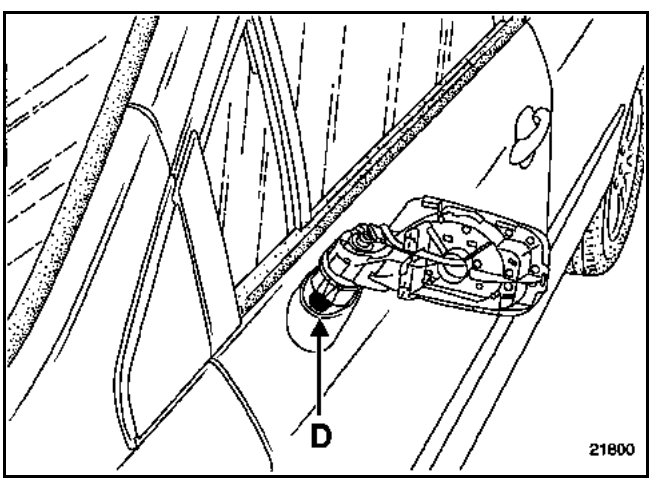

Remove the two blanking covers and two bolts (D).

Release the door mirror.

GETtheMANUALS.org

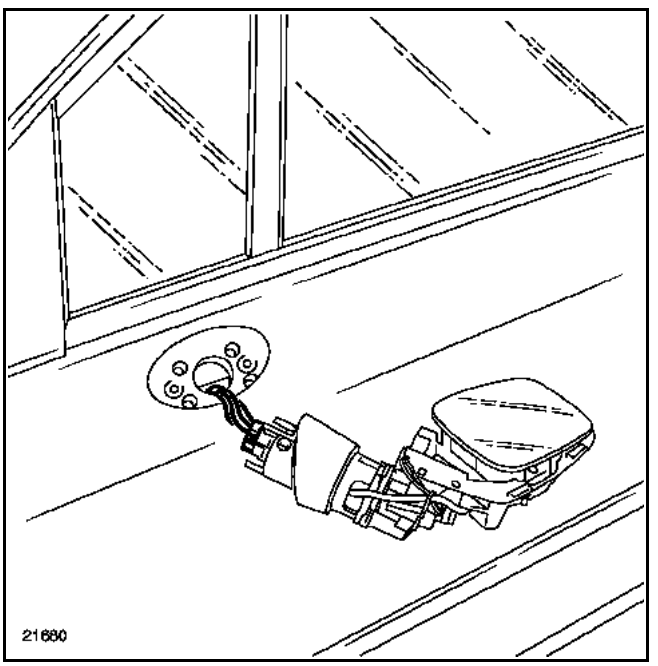

Disconnect the connector.

IMPORTANT: secure the wiring harness with masking tape so that it does not fall into the door box section.

REFITTING

To refit, proceed in the reverse order to removal.

GETtheMANUALS.org

IMPORTANT: to distinguish between the two mirror glasses, the electrochrome glass has a plastic border.

REMOVING THE STANDARD GLASS

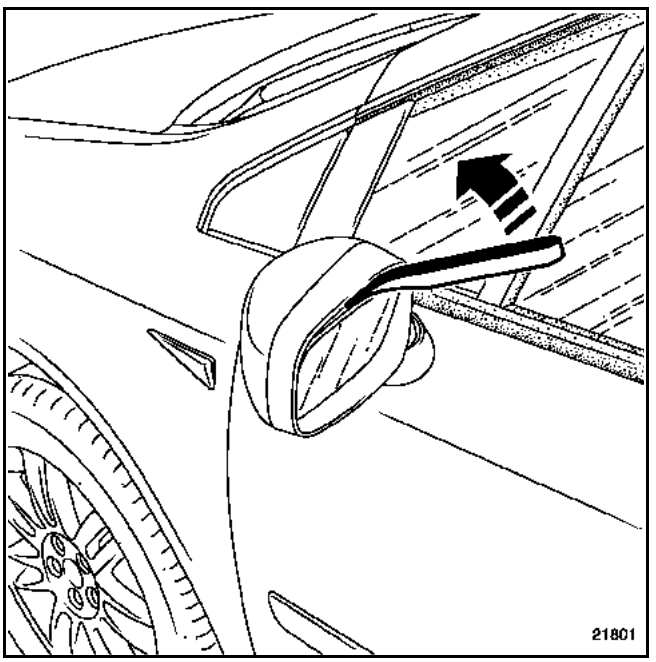

Protect the upper border of the door mirror with masking tape.

Use tool (**Car. 1363**) as a lever (as shown above); unclip the glass.

Disconnect the feed terminals.

REMOVING THE ELECTROCHROME GLASS

NOTE: to remove the electrochrome glass, it is necessary to remove the shell casing and the door mirror skirt.

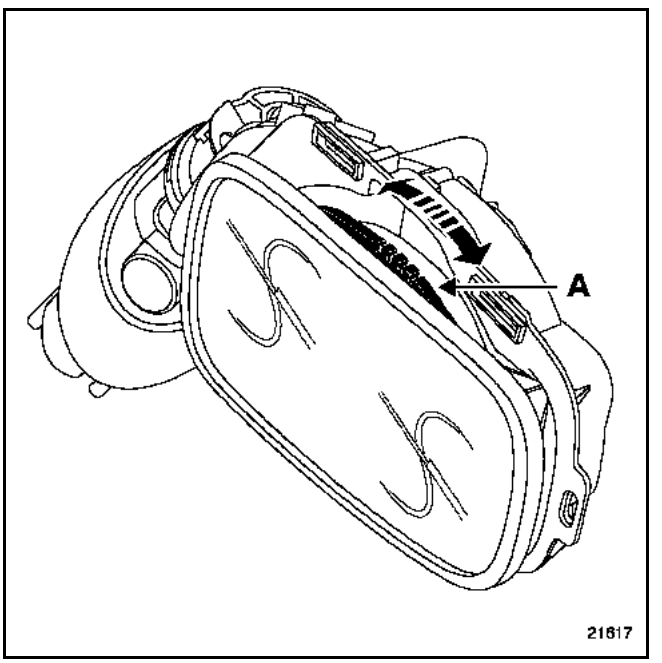

Using a flat blade screwdriver, push anti-clockwise until bayonet fitting (A) unlocks (the method is identical for the left and right sides).

GETtheMANUALS.org

REMOVAL

Remove the exterior front door weather strip (**Section 66A.A**).

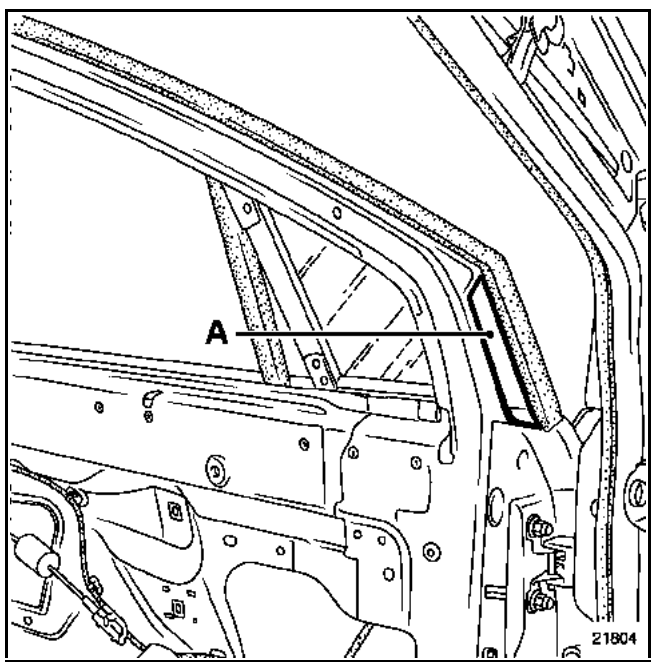

Remove:
– cover (A),

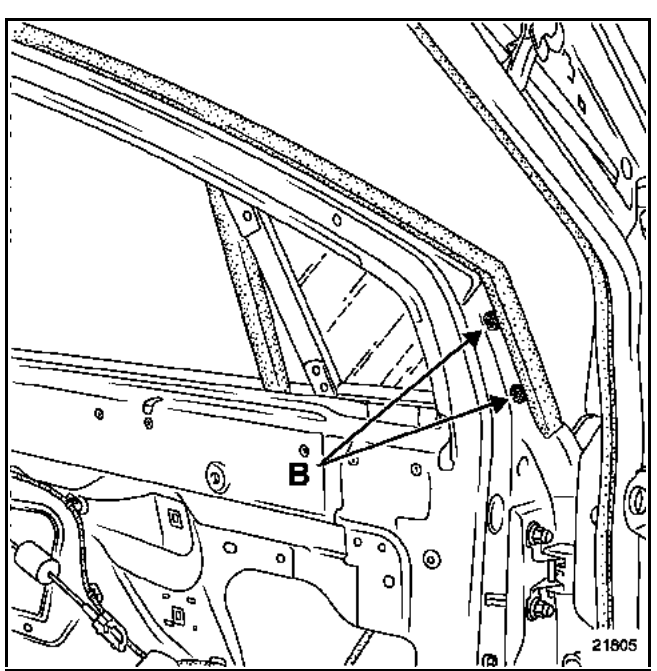

– the two mountings (B).

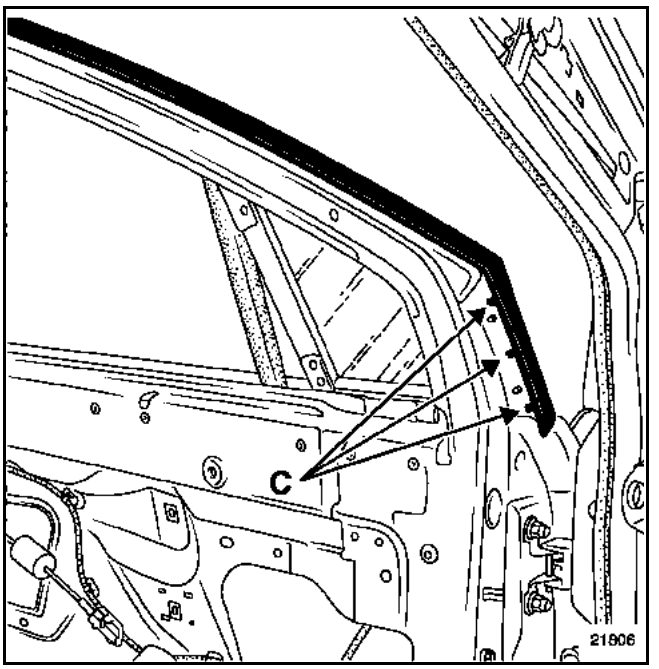

Release the three door frame mounting clips (C).

Remove the front section exterior trim.

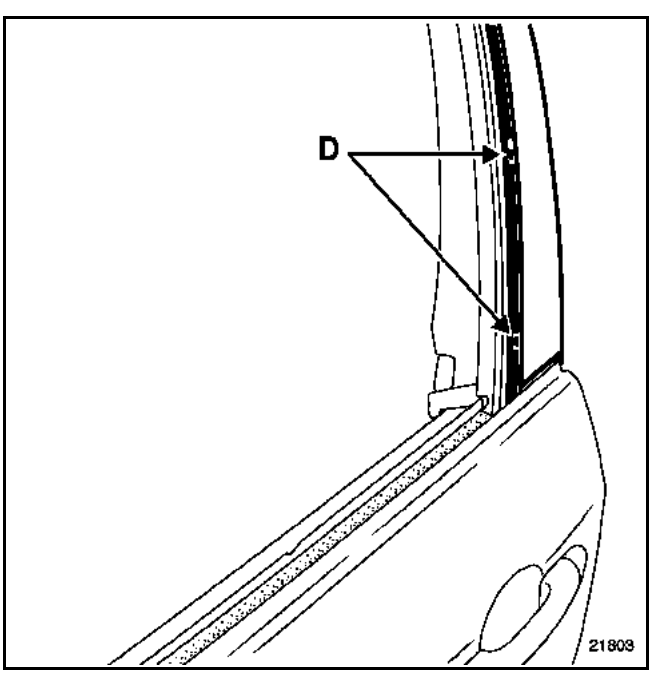

Remove:
– the seal,
– the mountings (D).

Remove the rear section exterior trim.

GETtheMANUALS.org

REMOVAL

Remove the exterior rear door weather strip (**Section 66A.B**).

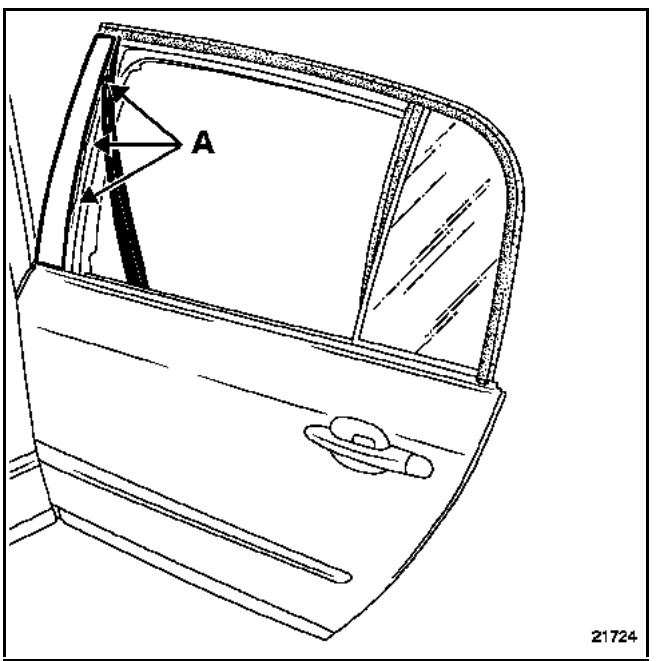

Remove the door frame seal; remove mountings (A).

Remove the trim.

GETtheMANUALS.org

REMOVAL

Push the seats forward.

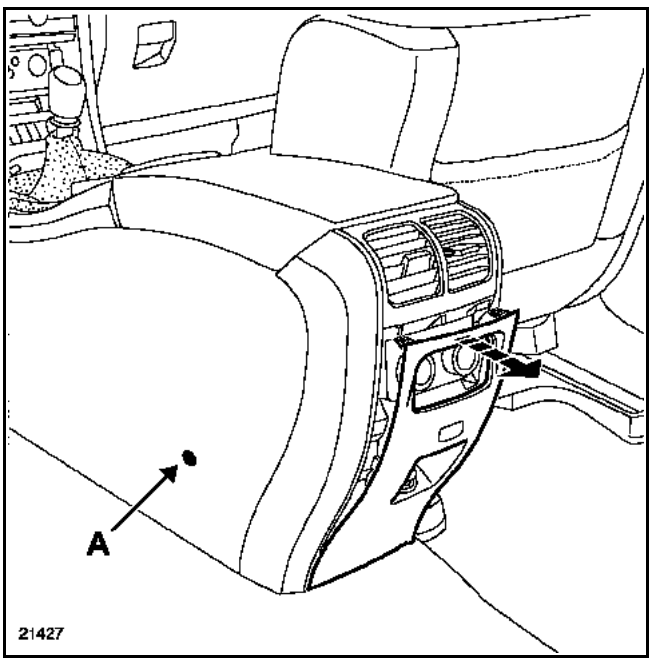

Remove the bolts (A).

Unclip the cigarette lighter mounting.

Push the seats back.

Disconnect the battery.

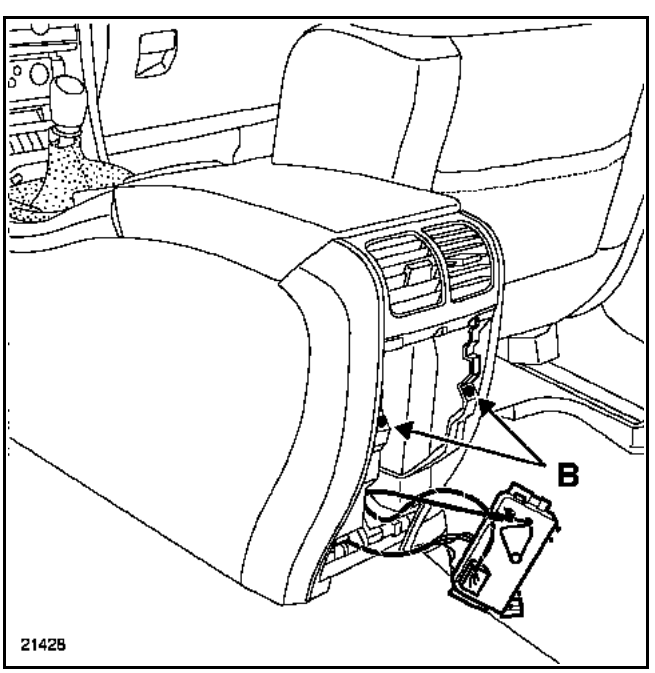

Unclip the heater control and remove the screws (B).

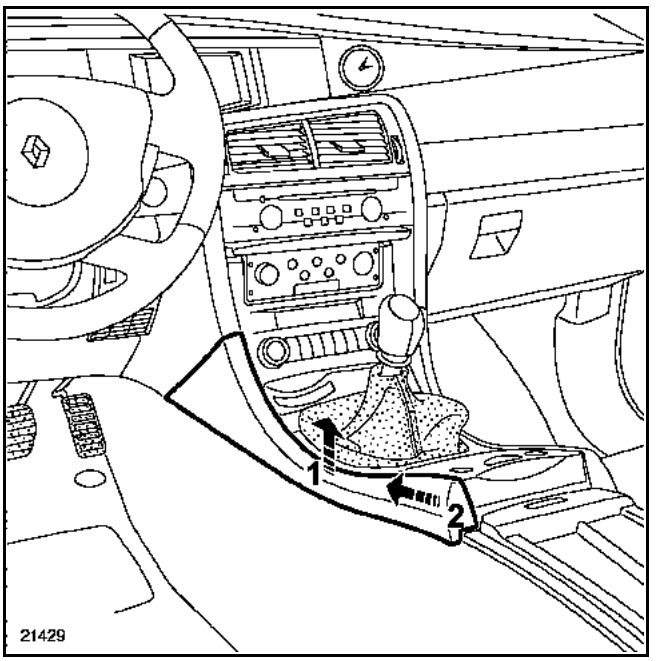

Unclip the rear section lining by gently pulling (1) then (2).

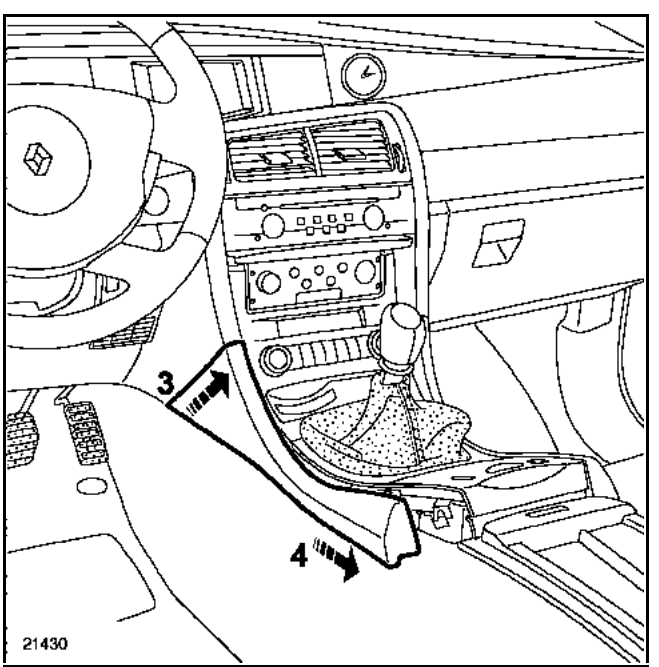

Remove the front section lining by gently pulling (3), then (4).

GETtheMANUALS.org

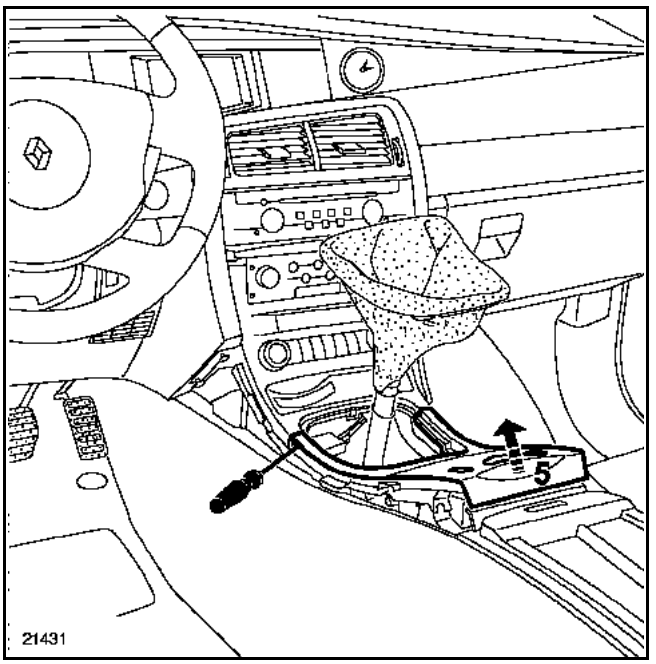

Unclip the speed control gaiter.

Using a flat screwdriver unclip the front and rear section seatbelt mountings (5).

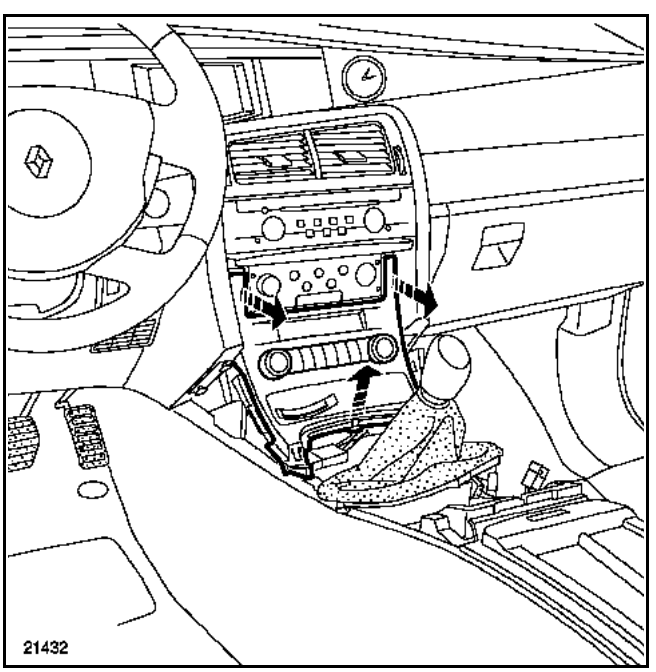

Unclip the card reader mounting from the upper and lower sections.

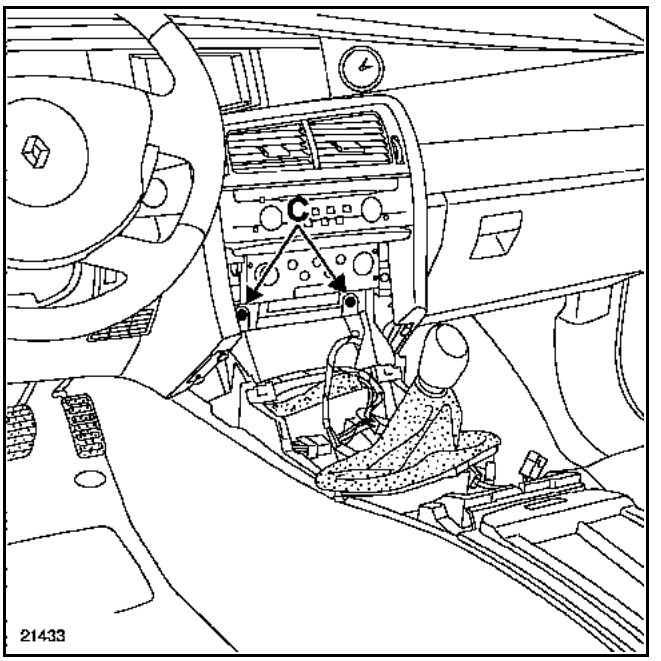

Remove the bolts (C).

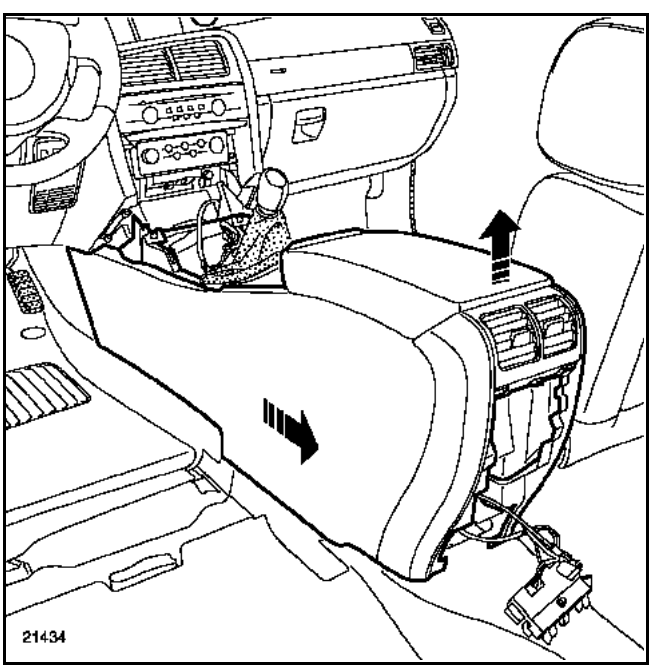

Lift the rear section of the console slightly, then slide the console towards the rear of the vehicle.

REFITTING

To refit, proceed in the reverse order to removal.

GETtheMANUALS.org

SPECIAL NOTES ON THE AUTOMATIC GEARBOX LEVER

REMOVAL

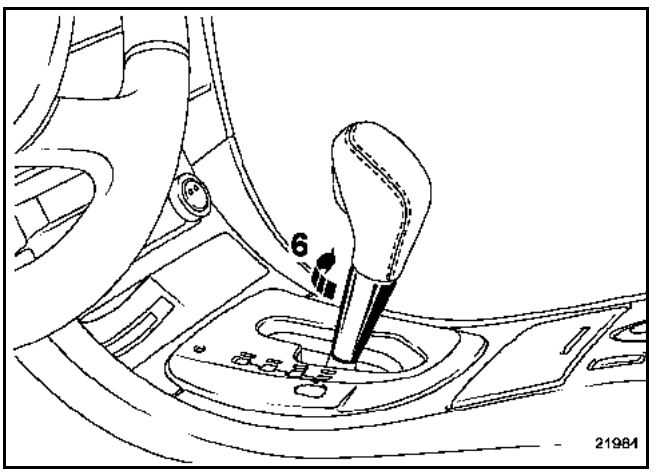

Rotate the lower section (6).

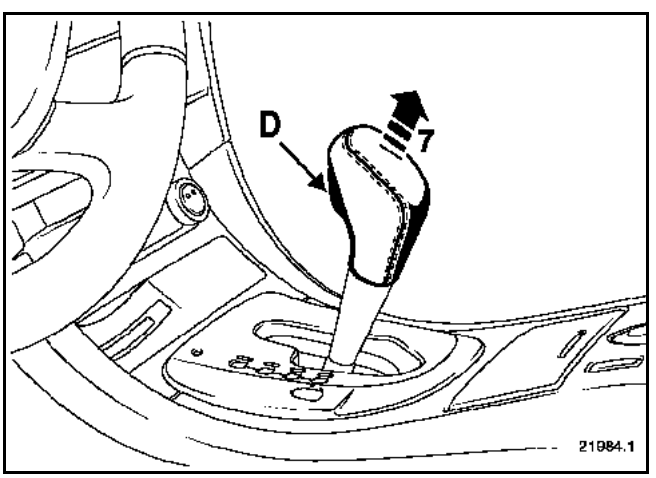

Press the command unlocking button (D); pull out the lever (7).

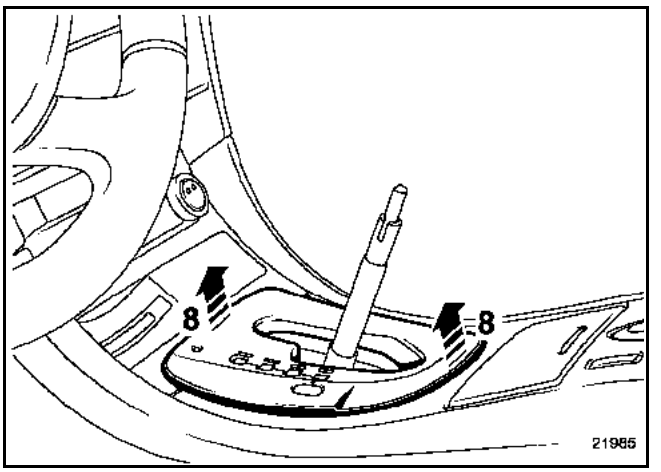

Unclip the gear lever plate (8).

REFITTING

Clip on the gear lever plate.

Assemble the two gear lever sections: clip together.

GETtheMANUALS.org

REMOVAL

IMPORTANT: It is inadvisable to handle the pyrotechnic systems (air bags and pretensioners) near a source of heat or flame as there is a risk of triggering.

IMPORTANT: before the dashboard can be removed, it is essential to lock the air bag computer using the fault finding tool (for instructions, refer to **section 88**)

NOTE: locking the air bag computer also unlocks the electric steering column lock.

Remove:
– the windscreen pillar trims (see **71A.A**),
– the central console (**section 57A.A**),
– the radio using the **M.S. 1363** or **M.S. 1639 tools** (depending on the version),
– the central communication unit (depending on the version), using the **M.S. 1363.** tool

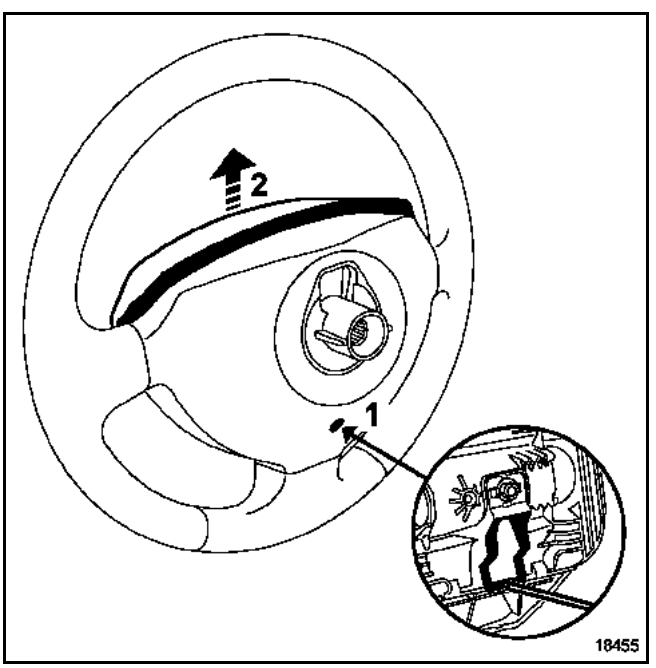

Remove the steering wheel air bag cushion. To do this, insert a screwdriver into the hole (1) then move it upwards (2).

Disconnect the steering wheel air bag connectors and the cruise control button connectors

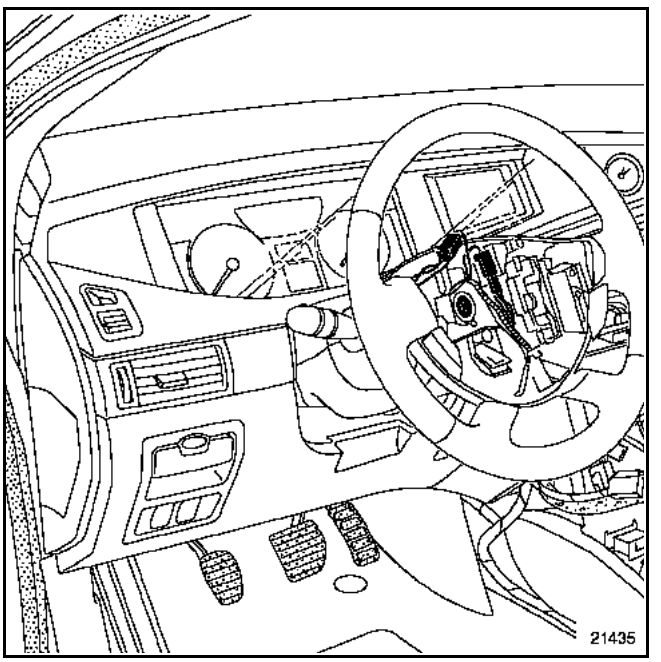

Remove:
– the steering wheel bolt,
– the steering wheel after setting the wheels straight,

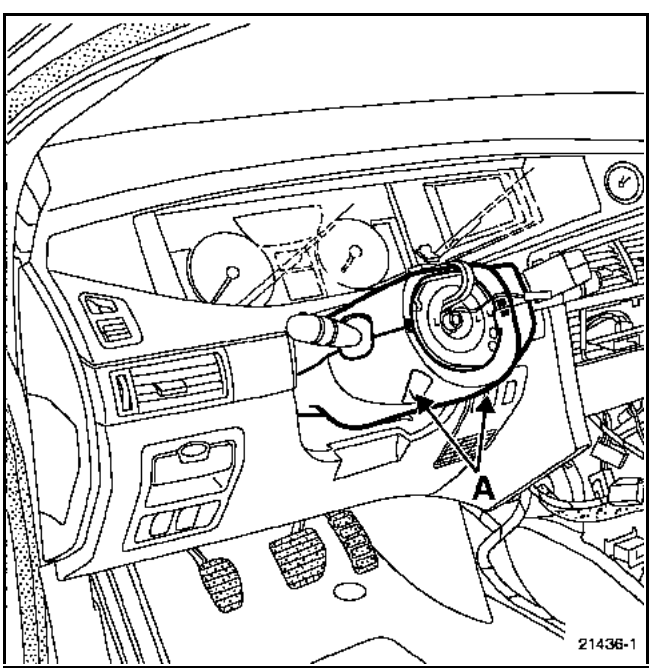

– the bolts (A); remove the upper and lower steering column shrouds

GETtheMANUALS.org

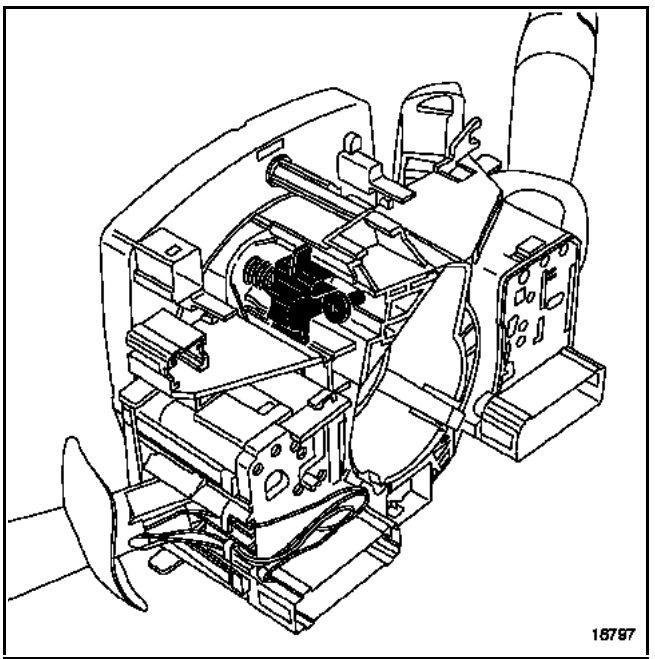

Remove the rotary switch, marking its position.

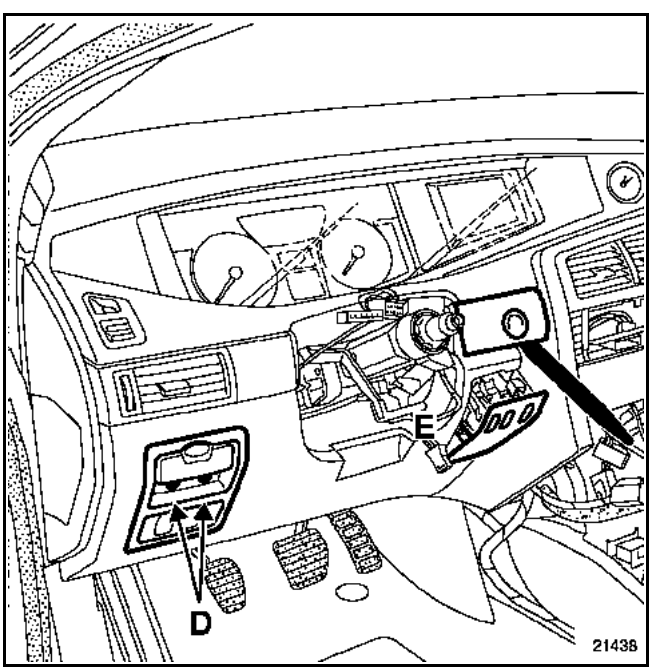

Remove:
– The starter button bracket,
– the automatic parking brake control bolts (D) after the cover has been removed,
– the switch mounting (E).

Disconnect the speech synthesis speaker located behind the switch mounting

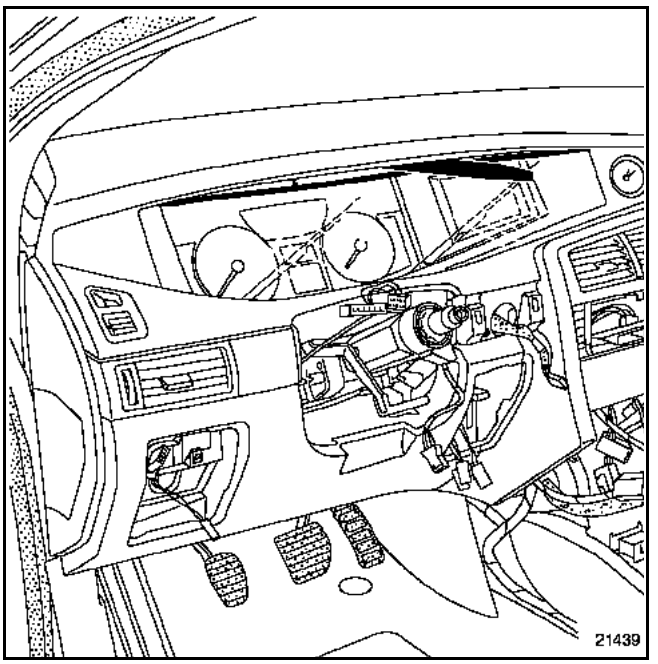

Unclip the dashboard frame upper trim.

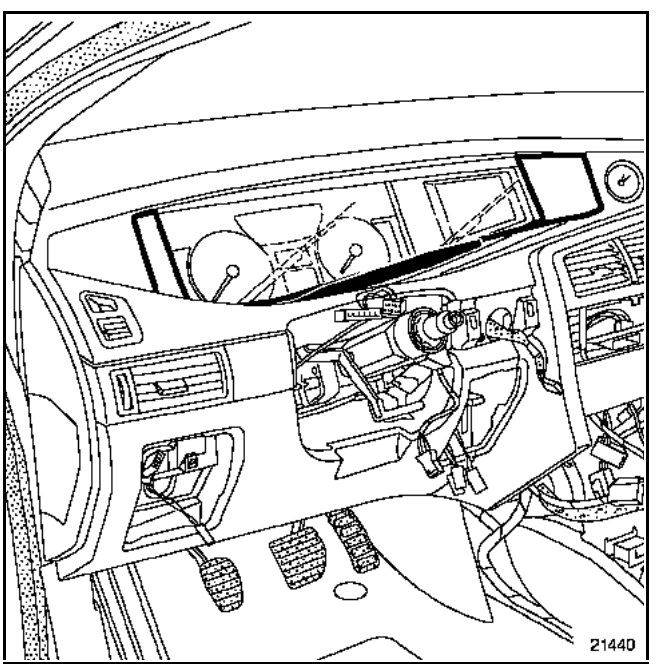

Unclip the dashboard frame lower trim

GETtheMANUALS.org

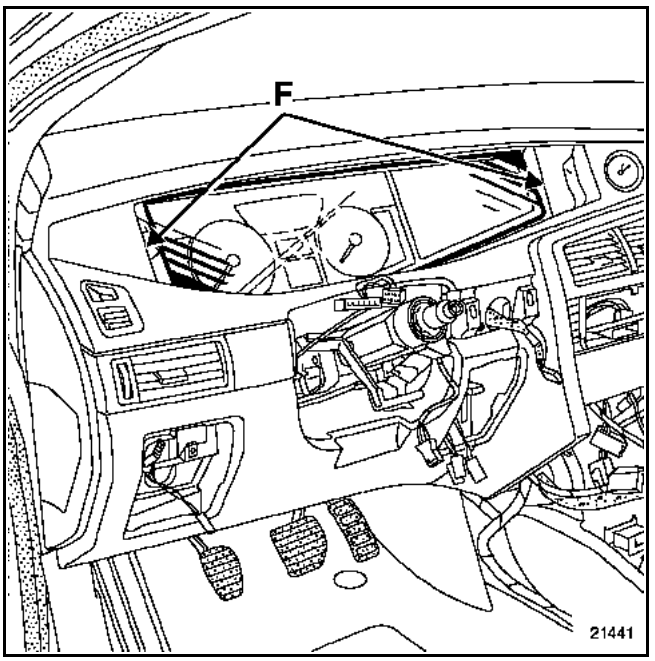

Remove:
– the bolts (F); remove the dashboard,
– the bolts located behind the dashboard.

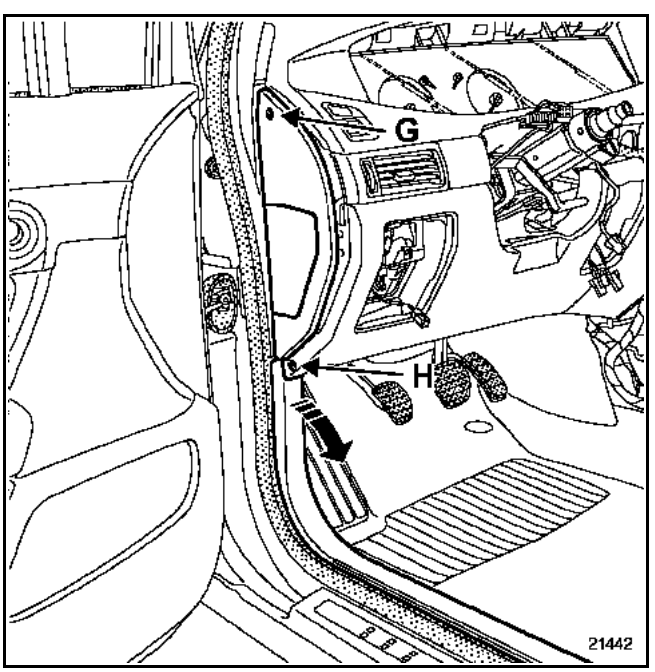

– the side trim to gain access to the bolts (G),
– the door trim (partially) to unscrew bolts (H).

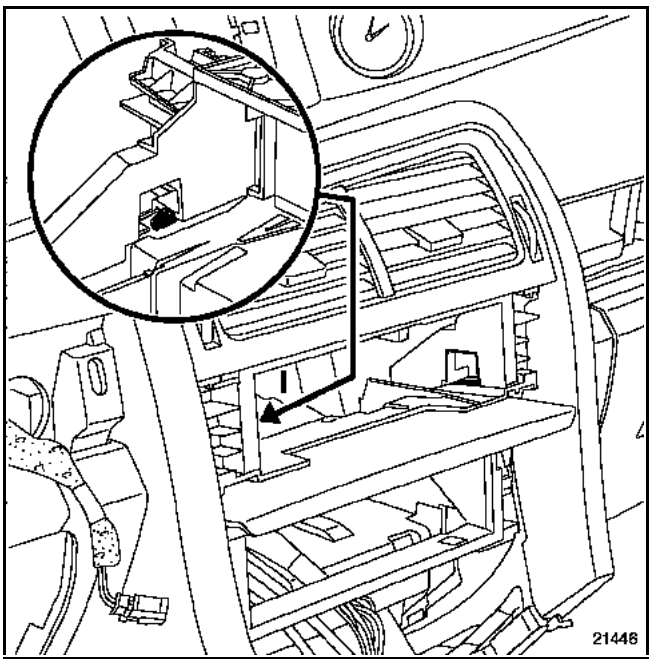

Remove the two clips (I).

Remove the central communication unit cover or the storage compartment.

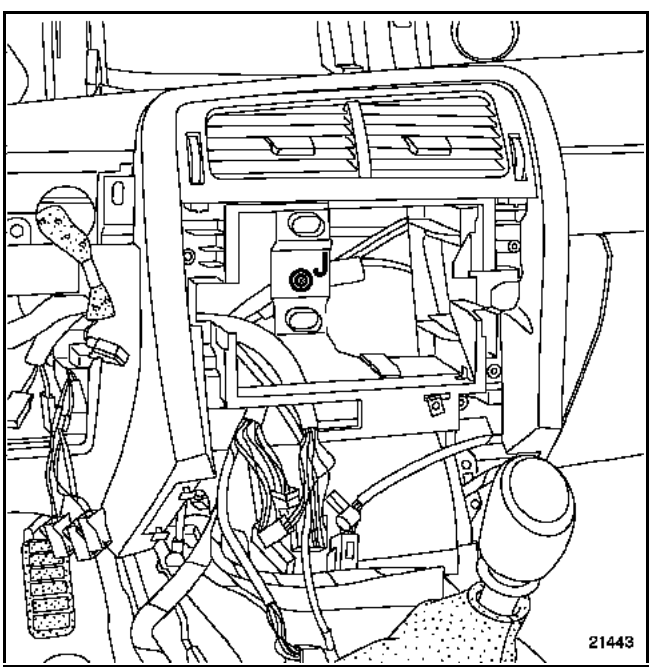

Remove the bolt (J).

GETtheMANUALS.org

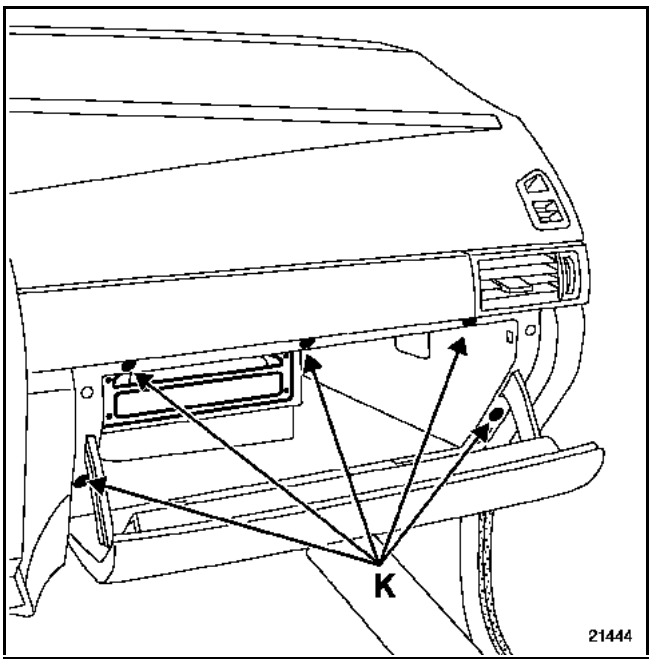

Remove:
– the CD ROM drive using the **M.S. 1363 tool**,
– the bolts (K), then remove the glovebox.

WARNING: the GPS aerial wire is very fragile. Do not bend or restrict it.

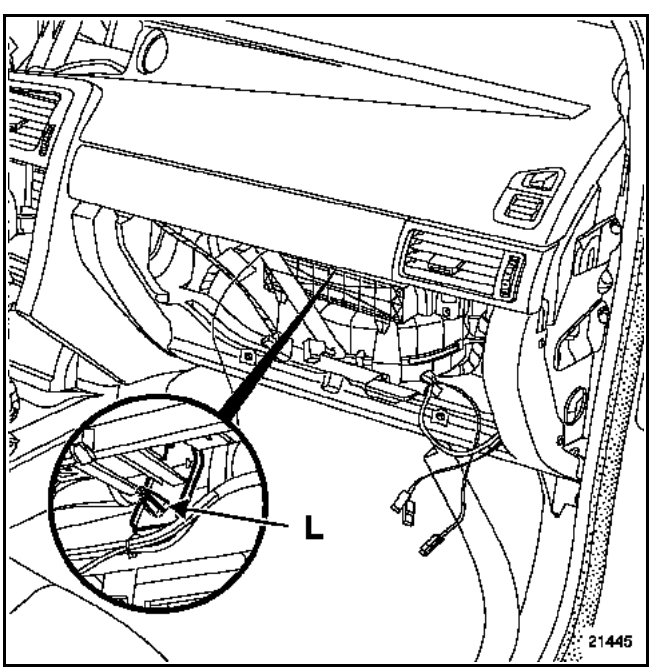

Use a **13 mm** spanner to lock the airbag clip (L) on the beam

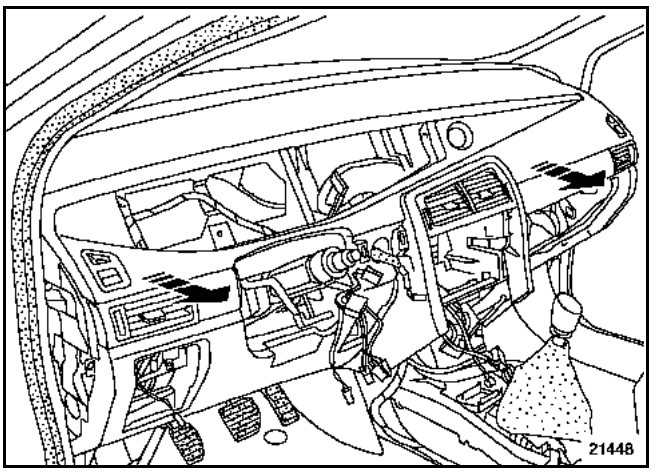

WARNING: before removing the instrument panel, remove the wiring to prevent it from being damaged.

Partially release the dash board.

Disconnect:
– the passenger air bag connector (**be careful not to disconnect the connectors located on the passenger airbag itself**),
– the two tweeters.

Remove the dash board (**requires two people**).

REFITTING (requires two people)

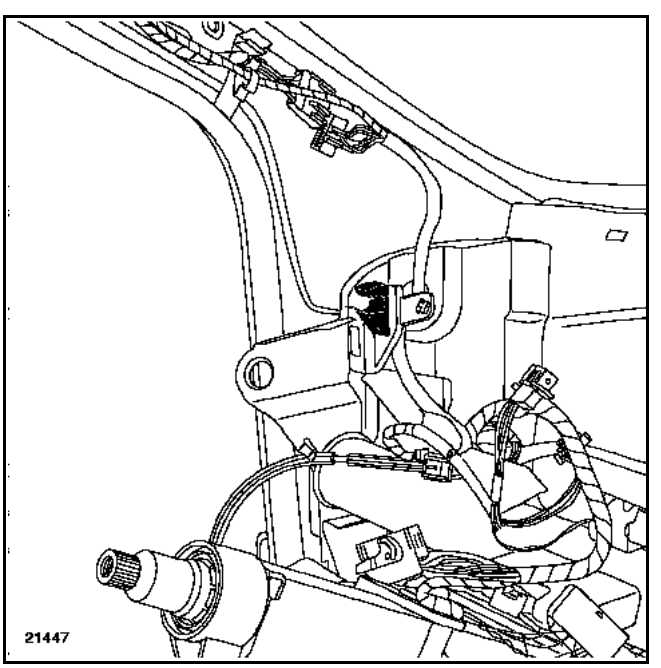

Before refitting, check that the clips (M) are in good condition.

GETtheMANUALS.org

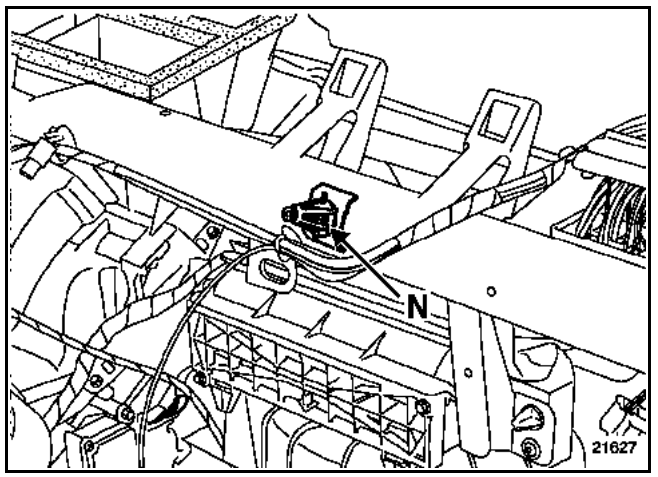

IMPORTANT: replace the indicator guide (N) each time the indicator panel is removed.

Using the **Mot. 1608** tool tighten the indicator guide to a torque of **2 NM ± 20 %**.

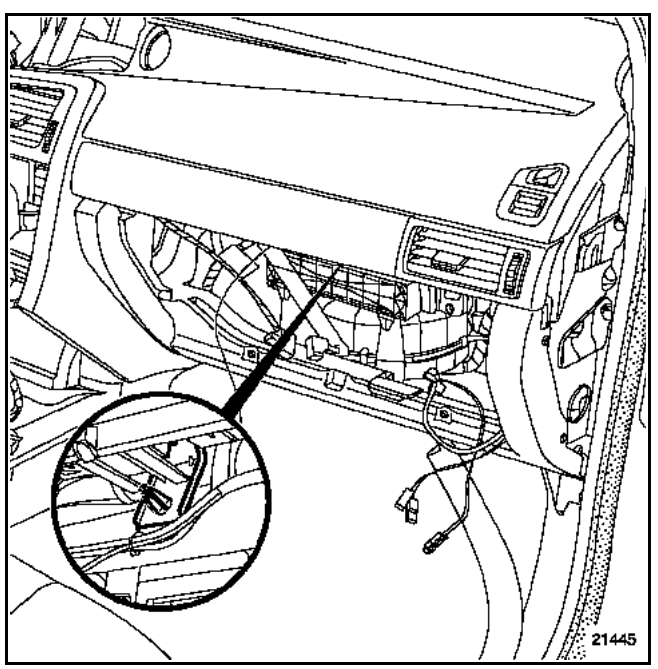

Make sure that the dashboard is securely attached to the indicator guide.

IMPORTANT: before attaching the dash board, place the harness in the correct position and connect the passenger air bag connector.

Features of the rotary switch

Before refitting the rotary switch, ensure that the wheels are straight.

Features of the steering wheel

IMPORTANT: the splines of the steering wheel include location notches ensuring that the steering wheel can only be fitted one way

The steering wheel should slip freely into the splines.

Be careful not to damage them.

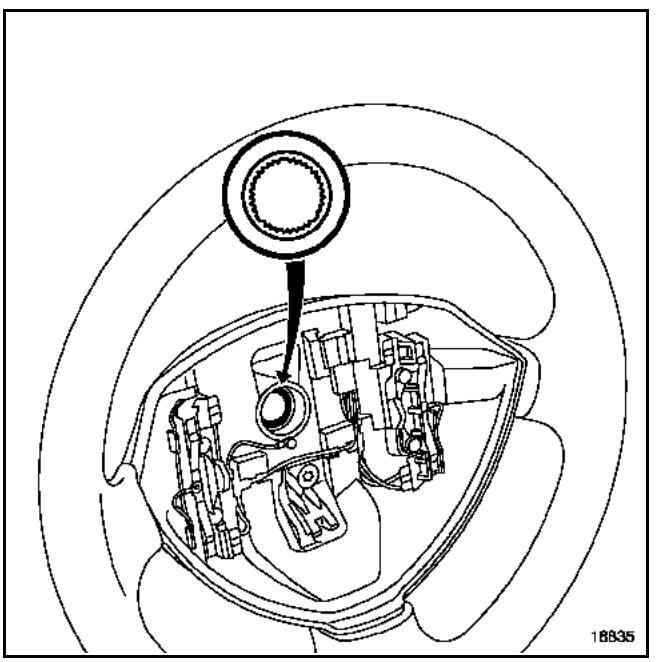

IMPORTANT: the steering wheel bolt should be replaced and tightened to 44 Nm each time the steering wheel is removed.

Features of the air bag

**IMPORTANT: before unlocking the air bag computer, test it with the fault finding tool.
If everything is correct, unlock the computer. If not, refer to the fault finding section.**

GETtheMANUALS.org

WARNING: If these instructions are not followed the system may not operate normally and could even cause accidental triggering.

When replacing a dash board fitted with a passenger air bag, it is essential to replace the sticker shown above (on the side of the instrument panel).

NOTE: After reconnecting the battery, it may be necessary to do some simple programming which does not require a diagnostic tool:
– setting the time on the clock,
– entering the four figure radio and DVD codes,
– initialising the one touch electric window motor,
– initialising the sun roof.

Refer to the programming methods in **section 80.**

DISMANTLING

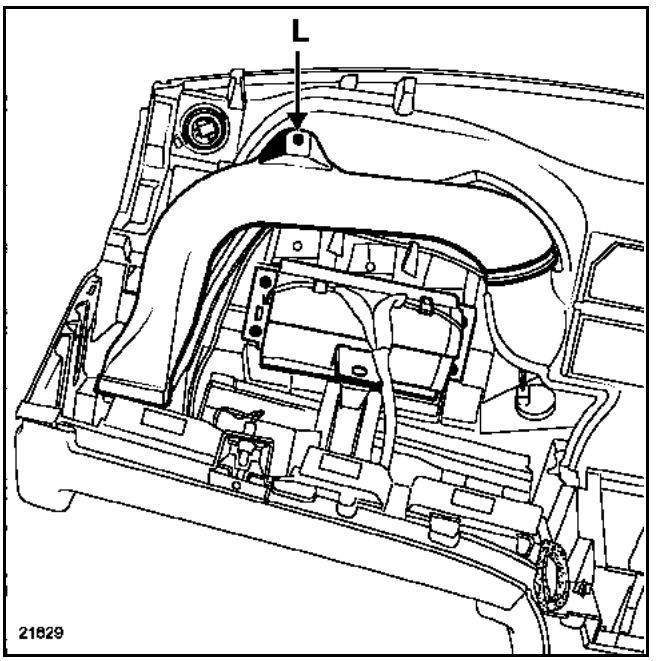

Remove:
– the four passenger air bag mountings,
– the bolts (L) then remove the sleeve,
– the two tweeters.

Tightening torque for the passenger air bag mountings (**8 NM**).

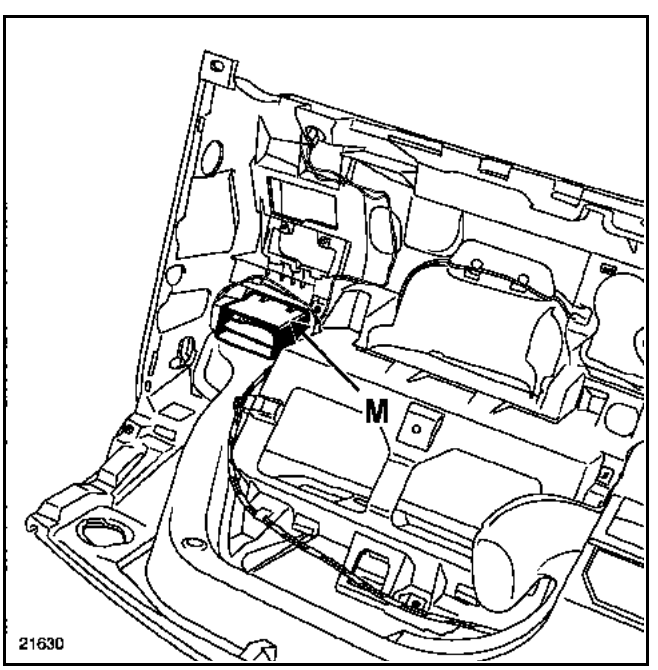

Remove the four clips (M) and remove the side air vent.

GETtheMANUALS.org

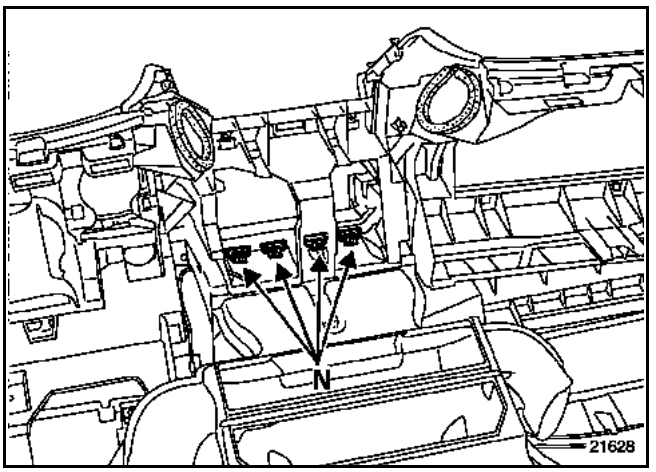

Unclip the clips (N); remove the central air vent.

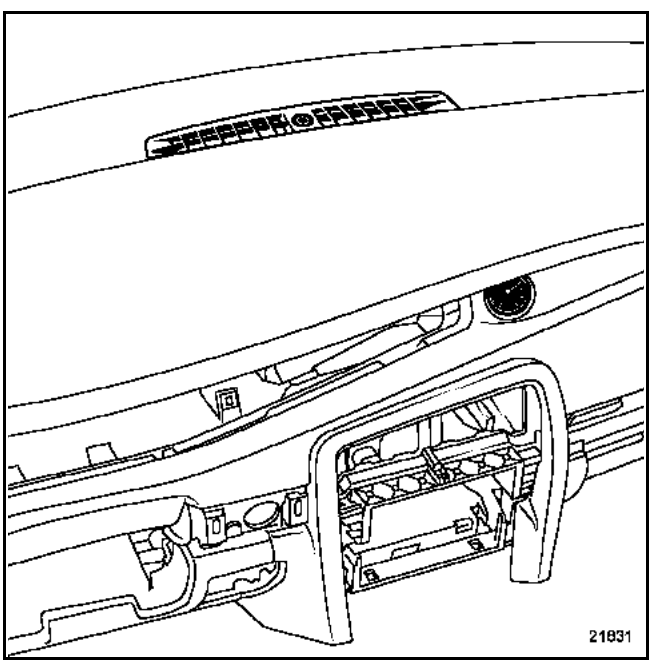

Remove:
– the isolation sensor,
– the clock.

REMOVING THE MONEY POCKET

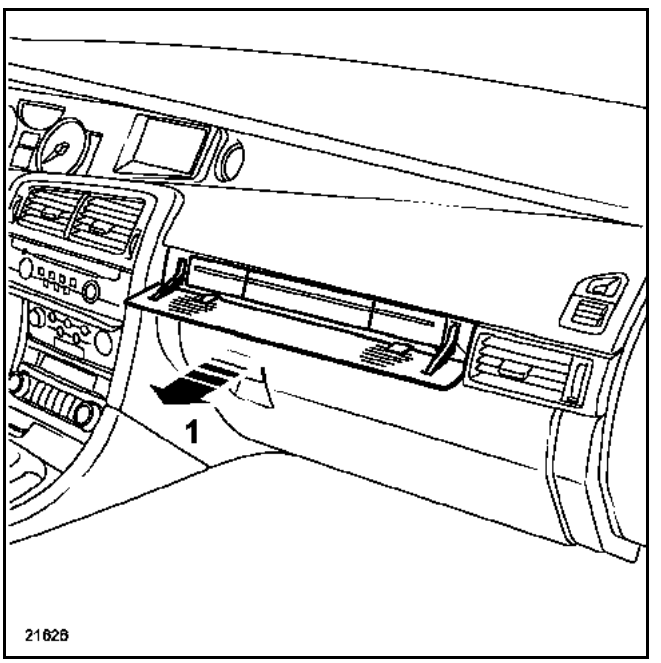

Open the money pocket access flap.

Unclip the money pocket (1) (**partially**).

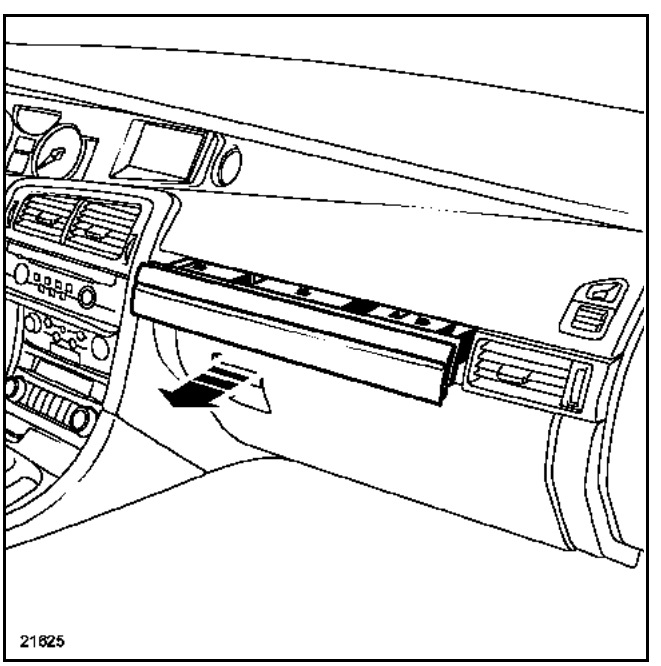

Close the flap and remove the money pocket.

GETtheMANUALS.org

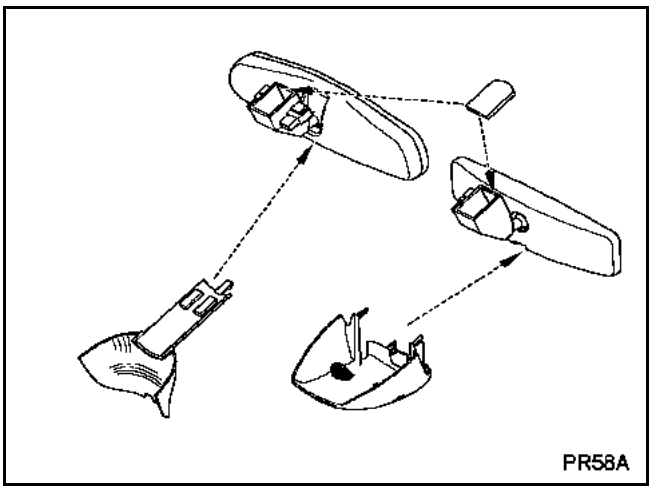

REMOVAL

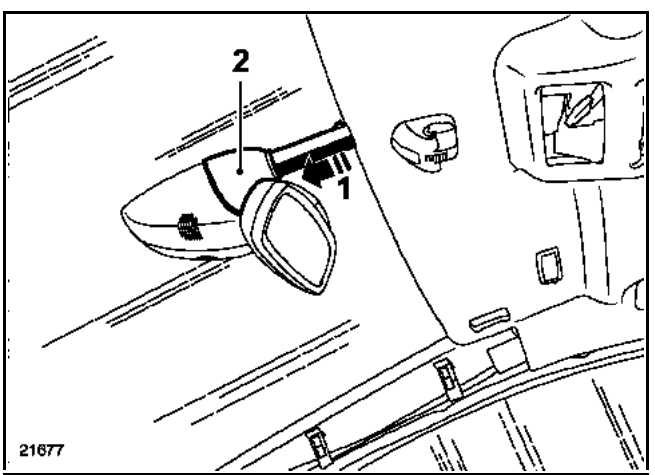

Release:
– the upper shell casing (1), apply pressure (2), then remove,

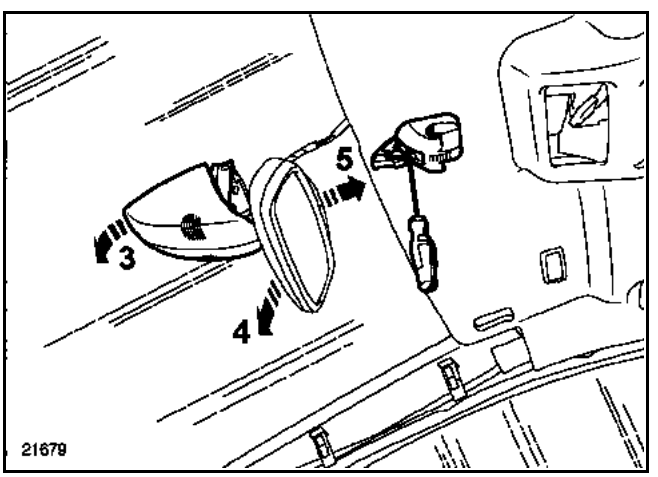

– the lower shell casing (3).

Disconnect the different connectors.

Apply pressure (4) and remove the rear-view mirror (5).

GETtheMANUALS.org

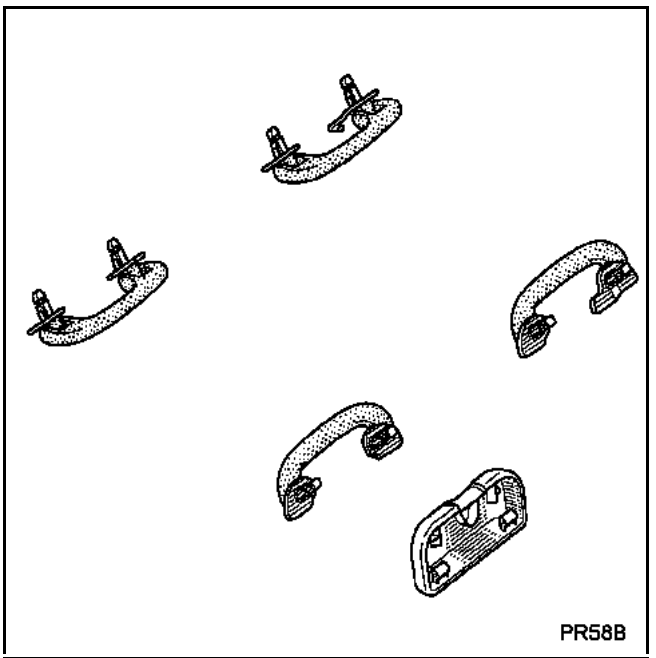

REMOVAL

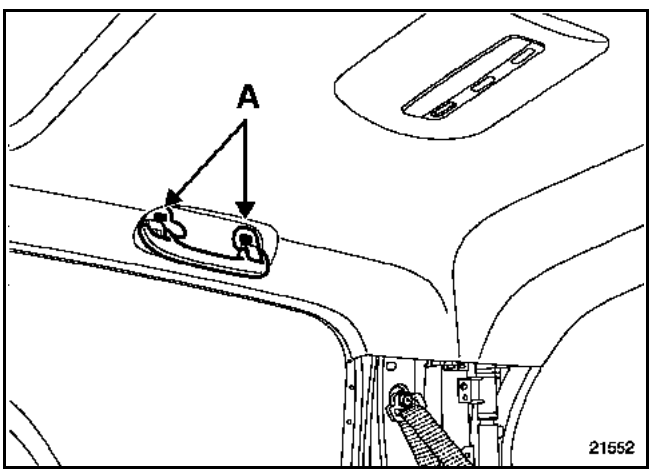

Using the grab handle removal tool (**Car. 1597**) unclip the two mounting pins (A), then pull it to remove.

GETtheMANUALS.org

REMOVAL

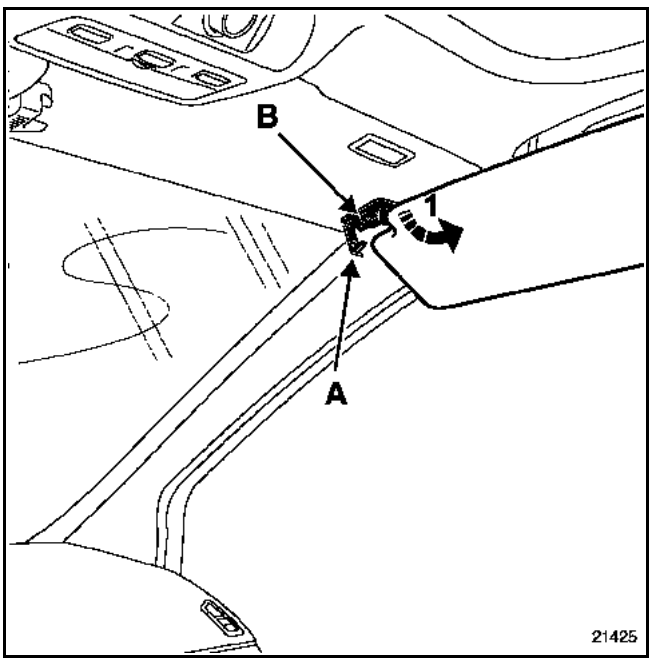

Position the sun visor towards the door.

Unclip:
– the mounting cover (A).
– the clip (B).

Pull the sun visor down towards the windscreen.

Remove the sun visor (1).

GETtheMANUALS.org

REMOVAL

IMPORTANT: when the seat belt pretensioners are triggered, the front seat belts and pretensioners must always be replaced (if they were being worn at the time). If you have any doubts about whether the seat belt was being worn, you should change it.

Remove:
– the seat (**section 75A.A**),
– the lower seat trim (**section 79A.A**),
– the seatback trim (**section 77A.A**),

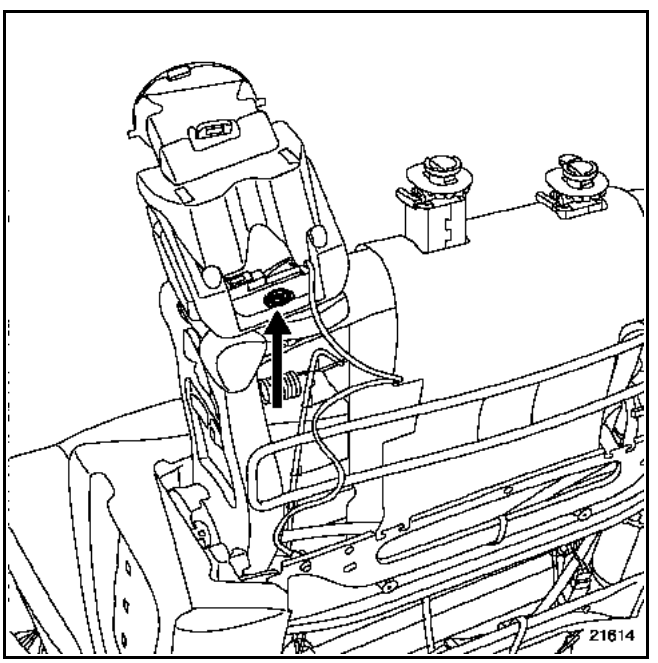

– the mounting bolt, then remove the retractor.

TIGHTENING TORQUES (in Nm)	
Seat belt retractor	**21**
Pretensioners	**21**

GETtheMANUALS.org

REMOVAL

After removing:
– the upper trim from the bottom of the rear step (**section 71A.F**),
– the rear side window shelf (**section 74A.A**),
– the quarter panel trim (**section 71A.G**),
– the wheel arch trim (**section 71A.I**),

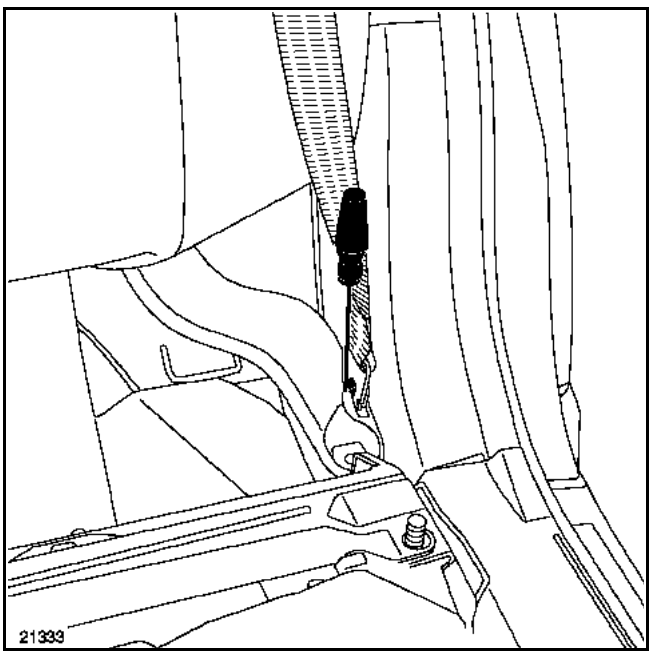

– unclip the seat belt using a small screwdriver.

Remove:
– the upper seat belt mounting (located behind the quarter panel trim) (**21 Nm ± 20%**),

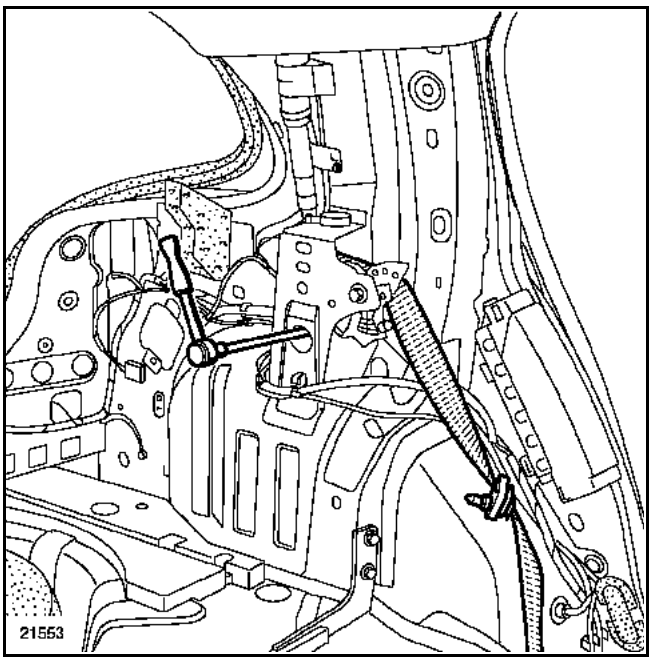

– the retractor mounting, then remove the retractor,

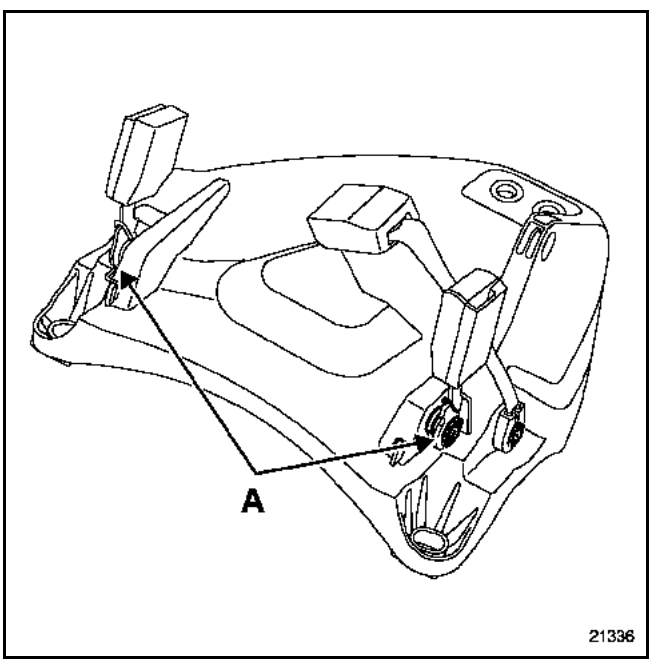

– bolts (A) then release the flexible stalks.

TIGHTENING TORQUES (in Nm)	▽
Seat belt retractor	21 ± 20%
Flexible stalk	21 ± 20%

GETtheMANUALS.org

RAPID CONNECTION

When the seat belt pretensioners are triggered, the rapid connection and rear seat belts must always be replaced, if they were being worn at the time. If you have any doubts about whether the seat belt was being worn, you should change it.

REMOVAL

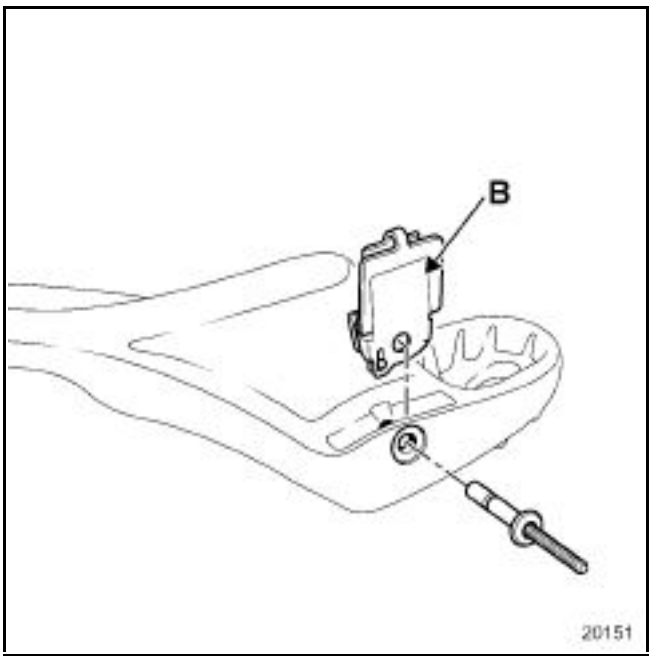

Grind down the head and drive the rivet out.

REFITTING

Position the connection (B) in its housing
part no.: 82 00 024 242.

Assemble the connection with the specific rivet
part no.: 77 01 049 320.

GETtheMANUALS.org

REMOVAL

IMPORTANT: when the seat belt pretensioners are triggered, the rear seat belts and pretensioners must always be replaced (if they were being worn at the time).
If you have any doubts about whether the seat belt was being worn, you should change it.

Remove:
– the seatback (**section 76A.B**),
– the seatback trim (**section 78A.B**),

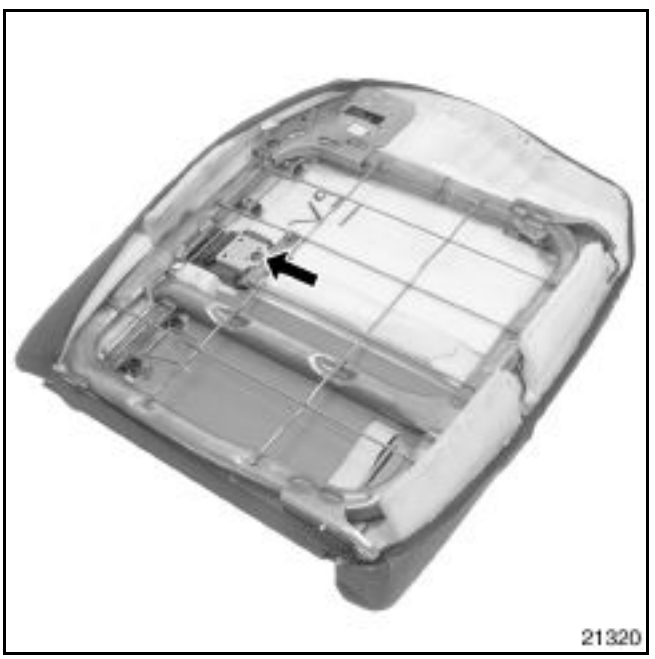

– the retractor mounting, then partially release the retractor, to unclip the seat belt cover from inside.

Remove:
– the seat belt,

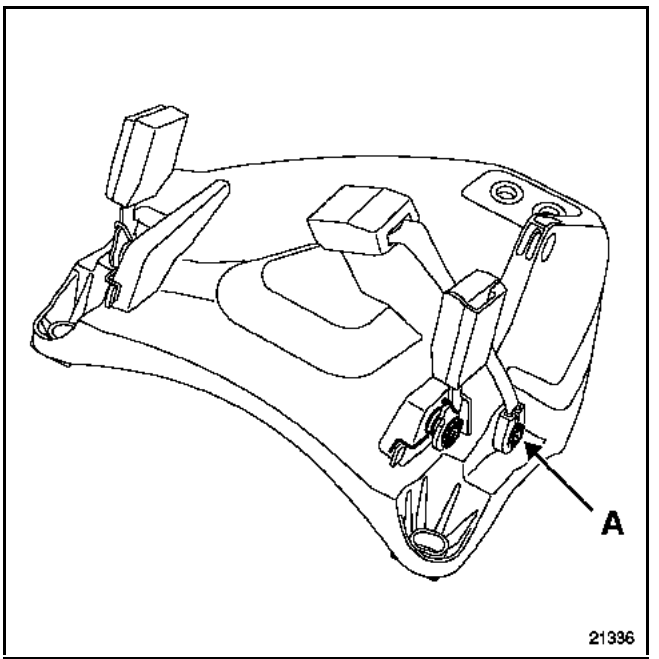

– bolt (A) then release the flexible stalk.

TIGHTENING TORQUES (in Nm)	▽
Seat belt retractor	**21**
Flexible stalks	**21**

GETtheMANUALS.org

VEL SATIS

6 Sealing and soundproofing

65A DOOR SEALING

66A WINDOW SEALING

BJ0E - BJ0J - BJ0K - BJ0P - BJ0V - BJ0M

77 11 311 162 DECEMBER 2001 EDITION ANGLAISE

"The repair methods given by the manufacturer in this document are based on the technical specifications current when it was prepared.

The methods may be modified as a result of changes introduced by the manufacturer in the production of the various component units and accessories from which his vehicles are constructed."

All copyrights reserved by Renault.

Copying or translating, in part or in full, of this document or use of the service part reference numbering system is forbidden without the prior written authority of Renault.

© RENAULT 2001

GETtheMANUALS.org

Sealing and soundproofing

Contents

		Page
65A	**DOOR SEALING**	
A	Front door frame seal	65A-1
B	Rear door frame seal	65A-2
66A	**WINDOW SEALING**	
A	Front door exterior weatherstrip	66A-1
B	Rear door exterior weatherstrip	66A-2
C	Front door fixed upright glass run channel	66A-3
D	Rear door fixed upright glass run channel	66A-4

GETtheMANUALS.org

REMOVAL

NOTE: the frame seal and the channels are moulded in one piece.

Remove:
– the door trim (**section 72A.A**);
– the door upright exterior embellishers (**section 56A.C**);
– the door's fixed upright channel (**section 66A.C**).

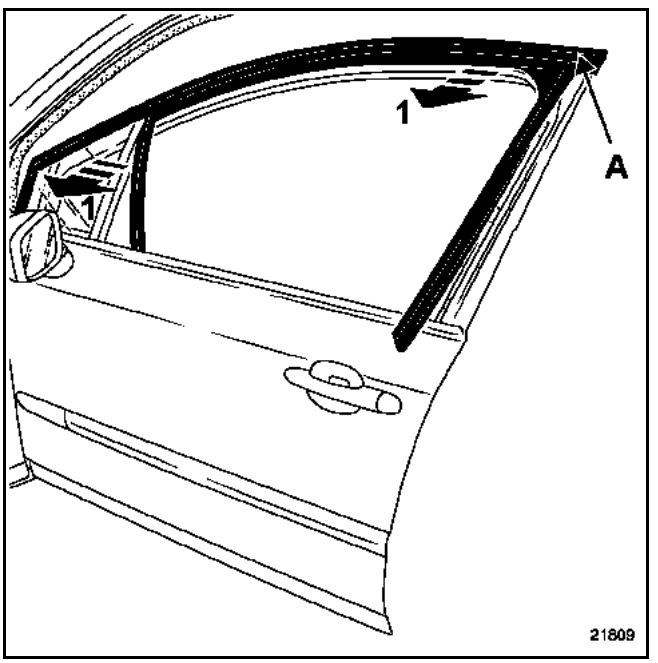

Carefully extricate the door frame seal (1).

REFITTING

Position and fit the seal in the corner (A).

Clip the seal over its entire length.

GETtheMANUALS.org

REMOVAL

NOTE: the frame seal and the channels are moulded in one piece.

Remove:
– the door trim (**section 72A.B**);
– the door upright exterior embellishers (**section 56A.D**);
– the door's fixed upright channel (**section 66A.D**).

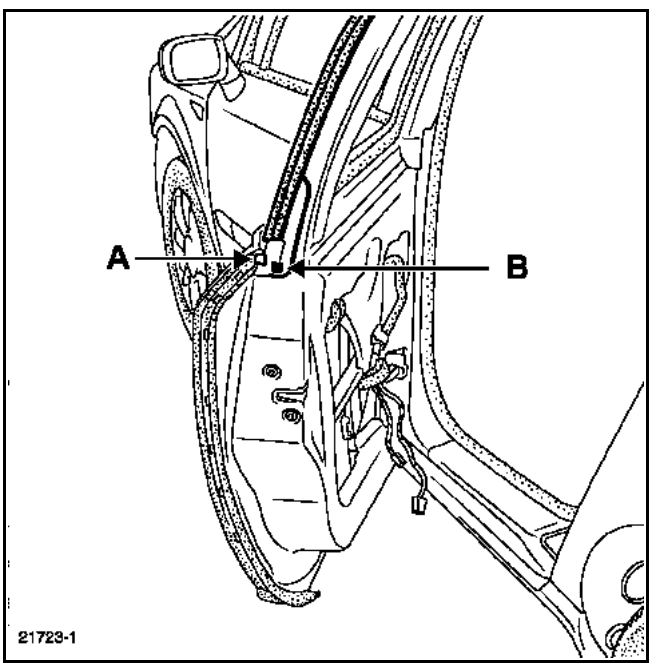

Unclip in the upper section the door panel double seal (A).

Unstick the two-faced adhesive tape (B) (replace two-faced tape when refitting).

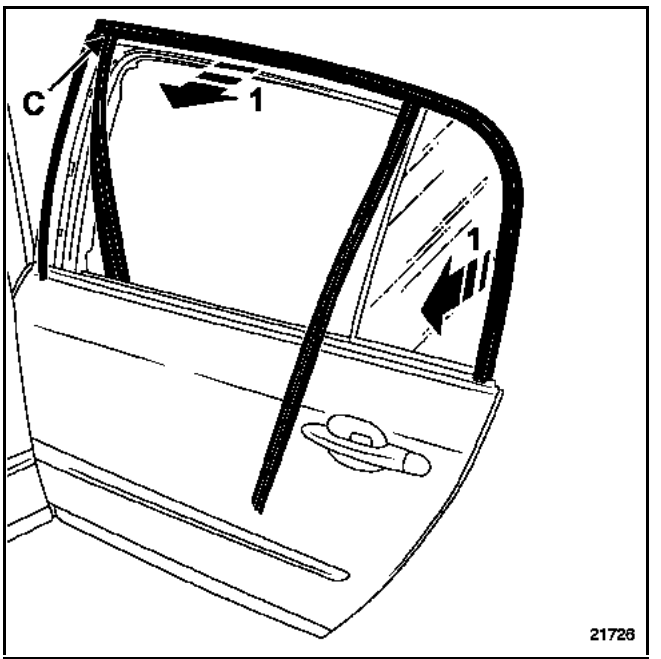

Carefully extricate the door frame seal (1).

REFITTING

Position and fit the seal in the corner (C).

Clip the seal over its entire length.

GETtheMANUALS.org

REMOVAL

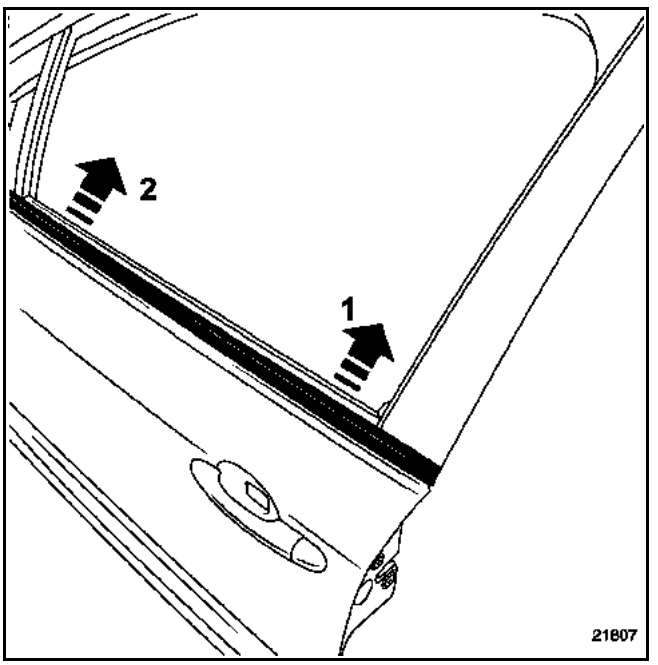

Using tool **Car. 1363** carefully remove the weatherstrip at (1) then (2).

IMPORTANT: the fixed window holds the weatherstrip more securely than the moving window does.

REFITTING

Position the weatherstrip in front of the fixed window and clip it in.

GETtheMANUALS.org

REMOVAL

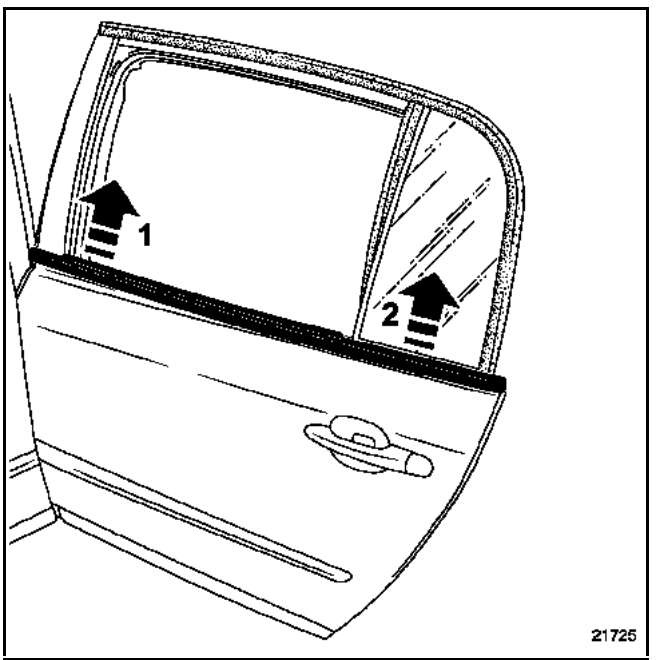

Using tool **Car. 1363** carefully remove the weatherstrip at (1) and (2).

IMPORTANT: the fixed window holds the weatherstrip more securely than the moving window does.

REFITTING

Position the weatherstrip in front of the fixed window and clip it in.

GETtheMANUALS.org

REMOVAL

Remove:
– the door trim (**section 72A.A**),
– the sliding window from the moving slide (**section 54A.B**),
– the interior door weatherstrip.
– the door frame interior trim (**section 72A.C**).

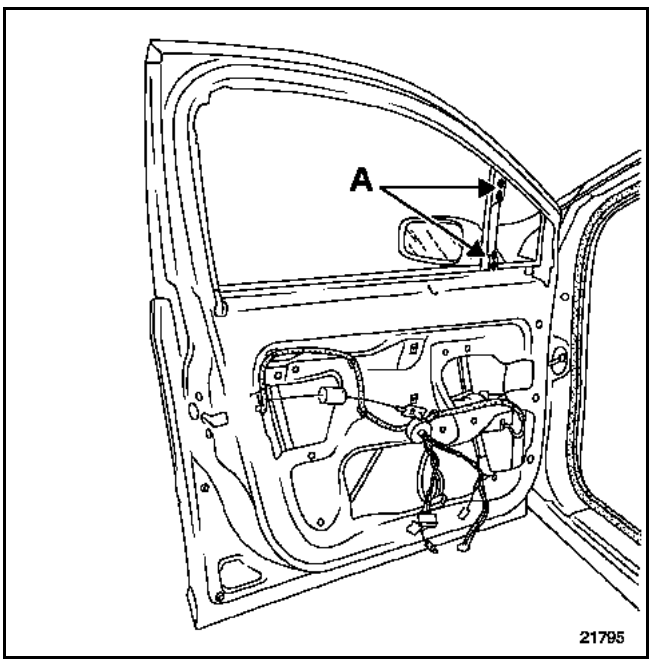

Remove the seal (partially).

Remove bolts (A).

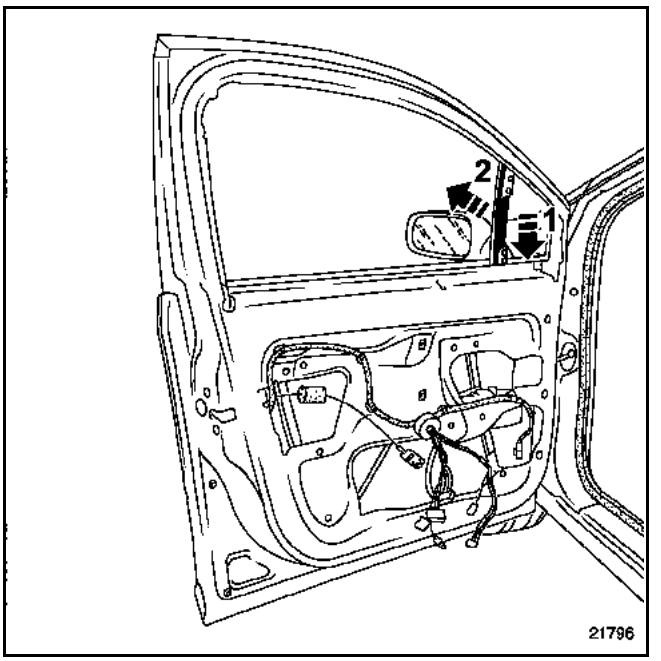

Disconnect the channel at (1) then (2), taking care not to damage the exterior door weatherstrip.

REFITTING

To refit, proceed in the reverse order to removal.

GETtheMANUALS.org

REMOVAL

Remove:
– the door trim (**section 72A.B**),
– the sliding window from the moving slide (**section 54A.C**),
– the interior door weatherstrip.
– the door frame interior trim (**section 72A.D**).

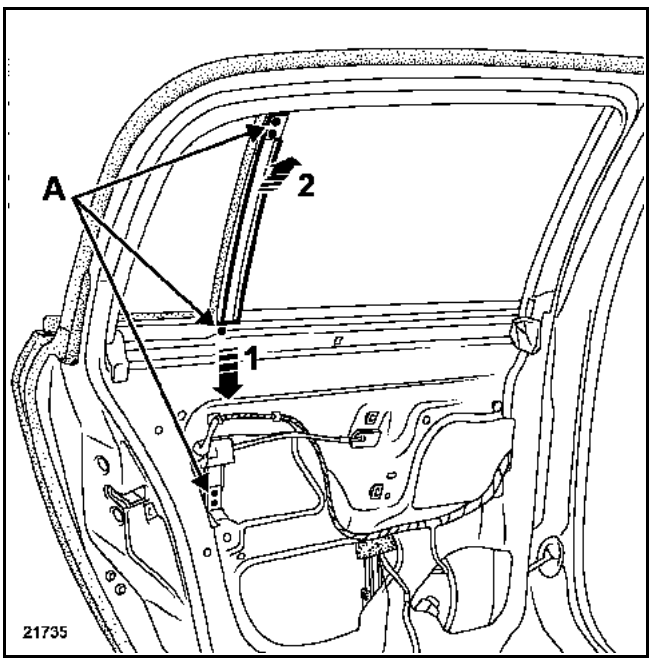

Remove the seal (partially).

Remove bolts (A).

Disconnect the channel at (1) then (2), taking care not to damage the exterior weatherstrip.

GETtheMANUALS.org

VEL SATIS

7 Trim and upholstery

70A GENERAL

71A BODY INTERNAL TRIM

72A SIDE OPENING ELEMENTS TRIM

73A NON-SIDE OPENING ELEMENTS TRIM

74A REAR PARCEL SHELF

75A FRONT SEAT FRAMES AND RUNNERS

76A REAR SEAT FRAMES AND RUNNERS

77A FRONT SEAT TRIM

78A REAR SEAT TRIM

79A SEAT ACCESSORIES

BJ0E - BJ0J - BJ0K - BJ0M - BJ0P - BJ0V

77 11 311 182 DECEMBER 2001 EDITION ANGLAISE

"The repair methods given by the manufacturer in this document are based on the technical specifications current when it was prepared.

The methods may be modified as a result of changes introduced by the manufacturer in the production of the various component units and accessories from which his vehicles are constructed."

All copyrights reserved by Renault.

Copying or translating, in part or in full, of this document or use of the service part reference numbering system is forbidden without the prior written authority of Renault.

© RENAULT 2001

GETtheMANUALS.org

Trim and Upholstery

Contents

		Page
70A	**GENERAL**	
	Safety	70A-1
71A	**BODY INTERNAL TRIM**	
A	Front body pillar trim	71A-1
B	B pillar lower trim	71A-2
C	B pillar upper trim	71A-3
D	Rear door sill trim	71A-4
E	Front door sill trim	71A-5
F	Rear door sill upper trim	71A-6
G	Quarter panel trim	71A-7
H	Rear end panel trim	71A-8
I	Wheel arch trim	71A-9
J	Roof panel trim	71A-10
72A	**SIDE OPENING ELEMENTS TRIM**	
A	Front door trim	72A-1
B	Rear door trim	72A-4
C	Front door rim interior trim strips	72A-7
D	Rear door rim interior trim strips	72A-8
73A	**NON-SIDE OPENING ELEMENTS TRIM**	
A	Bonnet trim	73A-1
B	Tailgate trim	73A-2
74A	**REAR PARCEL SHELF**	
A	Rear parcel shelf	74A-1
75A	**FRONT SEAT FRAMES AND RUNNERS**	
A	Whole seat	75A-1
B	Seat runners	75A-3
C	Seat motors	75A-5
76A	**REAR SEAT FRAMES AND RUNNERS**	
A	Whole seat squab 1/3 - 2/3	76A-1
B	Whole seatback 1/3 - 2/3	76A-2
77A	**FRONT SEAT TRIM**	
A	Seatback trim	77A-1
B	Seat squab trim	77A-4
78A	**REAR SEAT TRIM**	
A	Seat squab trims	78A-1
B	Seatback trim	78A-3
79A	**SEAT ACCESSORIES**	
A	Front seat lower trims	79A-1
B	Rear seatback locking	79A-3
C	Front seat storage compartment	79A-4

GETtheMANUALS.org

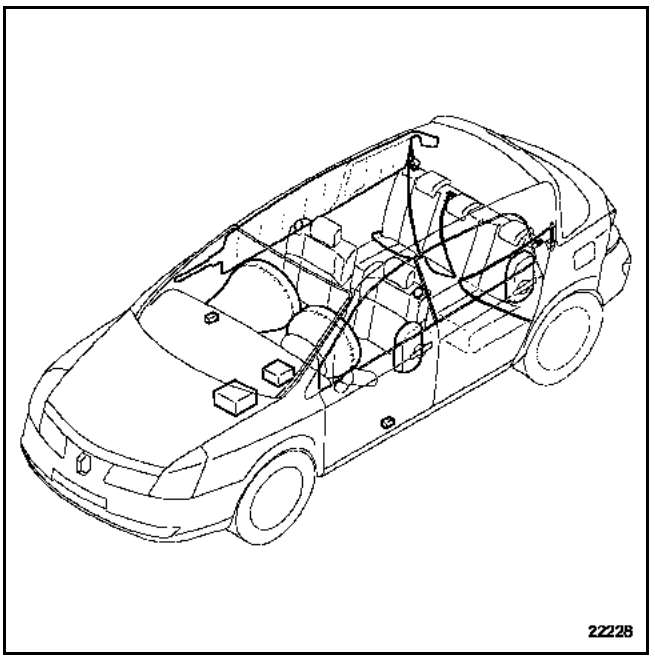

AIR BAG AND PRETENSIONERS

IMPORTANT: all work on the air bag and pretensioner systems must be carried out by qualified personnel who have received the proper training.

IMPORTANT: the pyrotechnic systems (air bags and pretensioners) must not be handled near a source of heat or flame as there is a risk of triggering.

INFORMATION: refer to **section 8** for more detailed information.

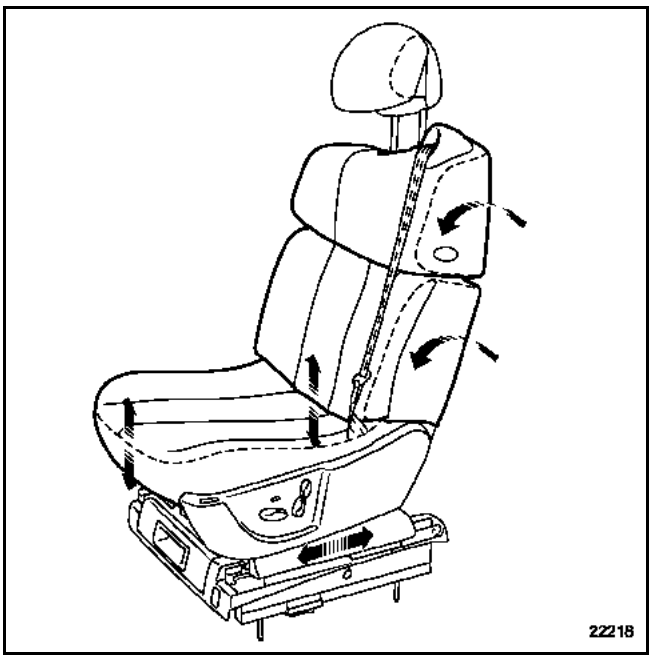

IMPORTANT: before removing a seat, lock the computer by means of the diagnostic tool. When this function is activated, all the ignition lines are disabled and the air bag warning light on the instrument panel comes on.

HEAT SHIELDS

Heat shields must be refitted, whether they are for bodywork or mechanical components.

TIGHTENING TORQUES

The recommended tightening torques MUST be observed.

TOOLS AND PRODUCTS

Read the precautions for use of the tools and products with care and observe the safety instructions by using the appropriate protection (gloves, mask, etc.).

GETtheMANUALS.org

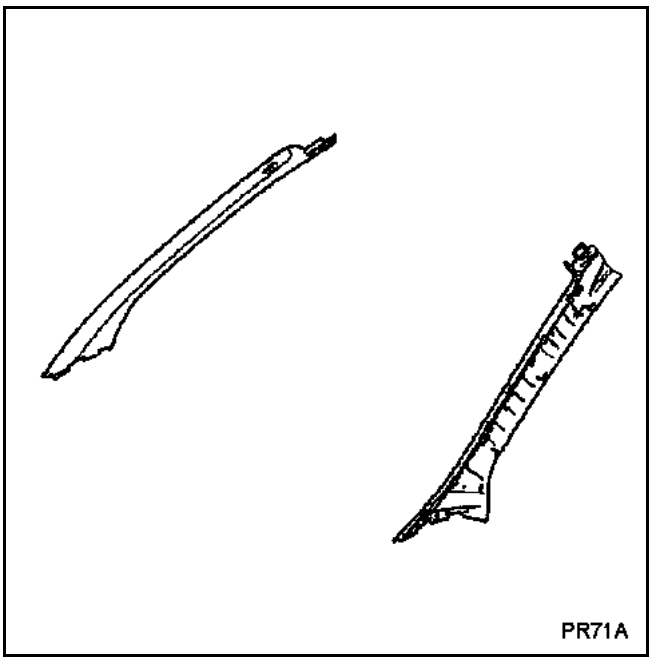

REMOVAL

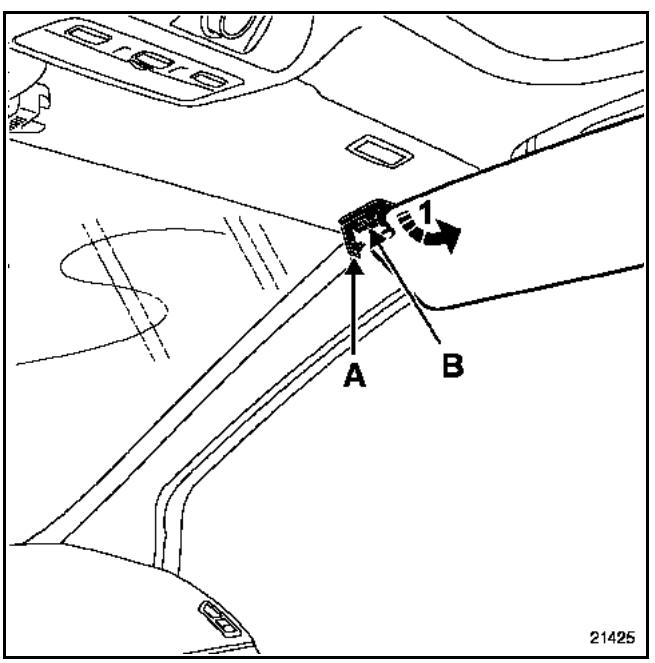

Position the sun visor towards the door.

Unclip:
– mounting cover (A),
– clip (B).

Pull the sun visor down towards the windscreen.

Remove sun visor (1).

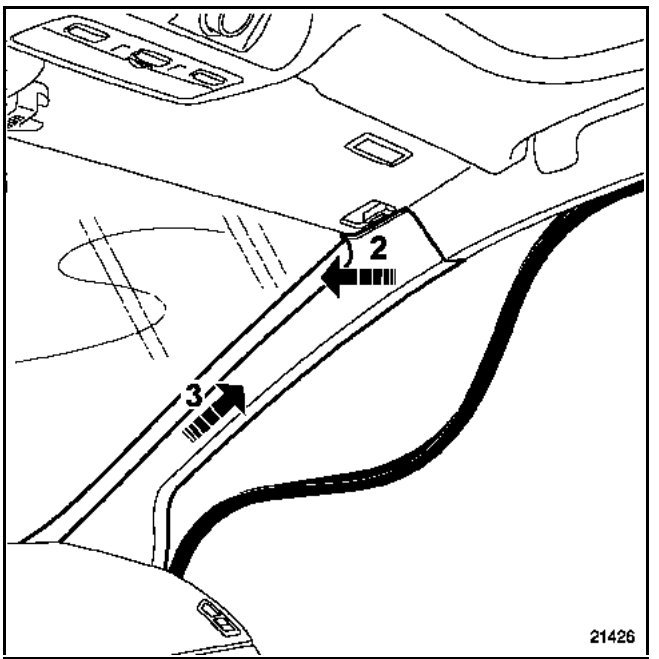

Partially remove the door frame seal.

Unclip the upper section lining (2).

Take out trim (3) keeping the upper section detached.

REFITTING

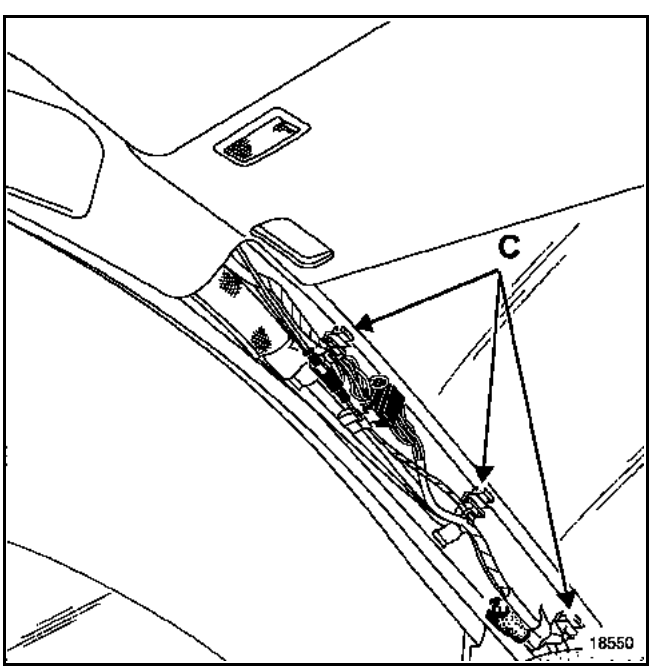

Before refitting, check that the clips (C) are in good condition.

GETtheMANUALS.org

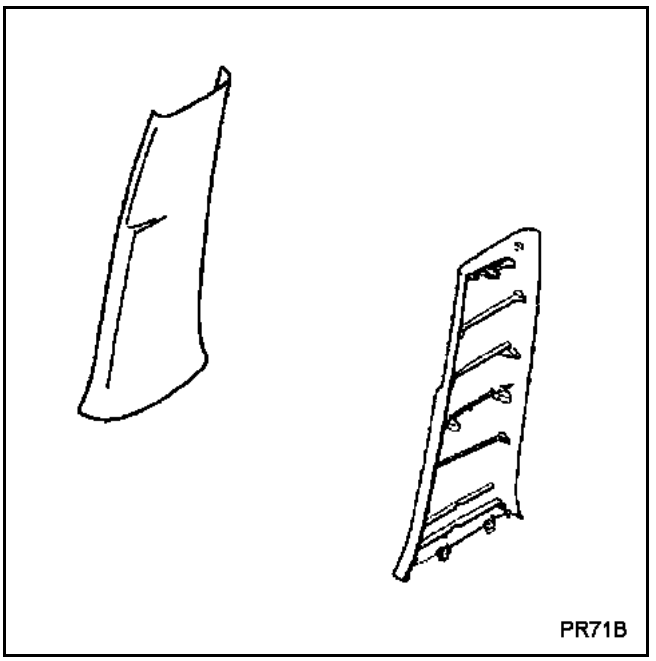

REMOVAL

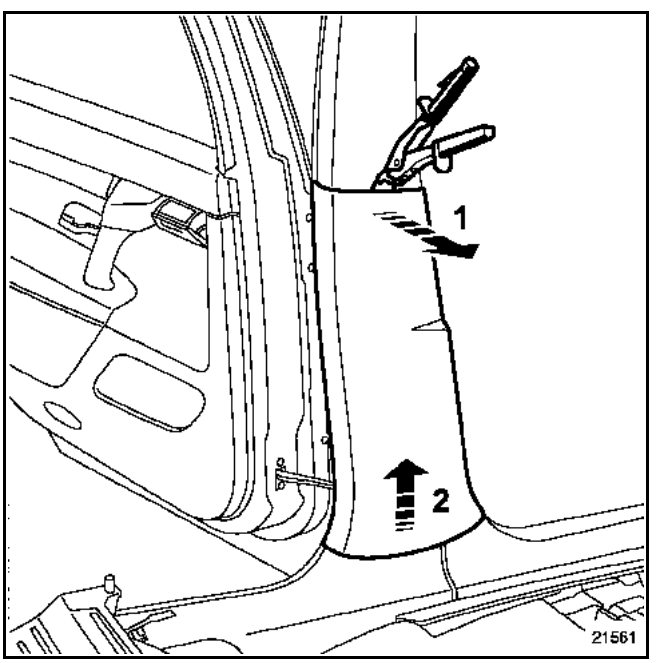

Unclip upper section lining (1).

Take out the trim (2).

GETtheMANUALS.org

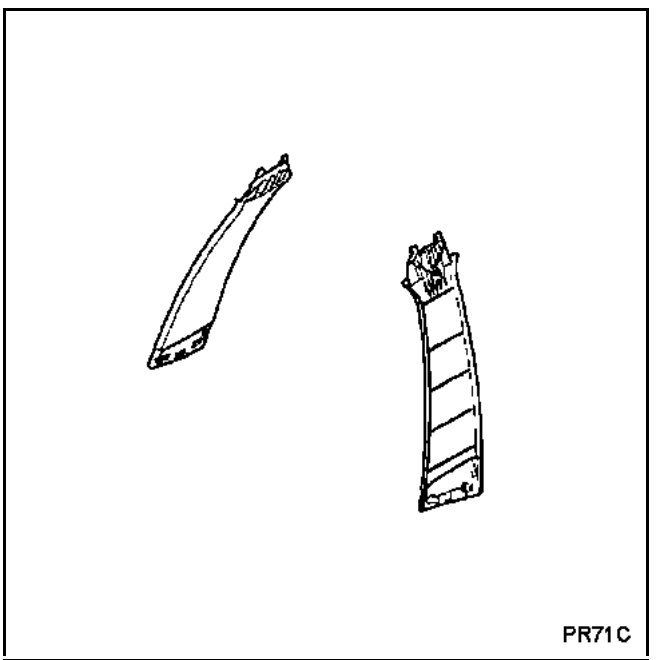

REMOVAL

Remove:
– the centre pillar lower trim,
– the door frame seal (partially).

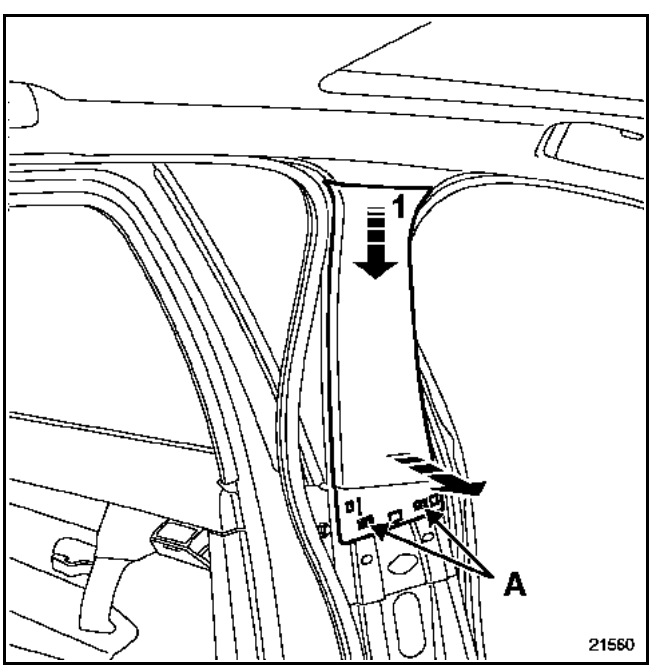

Unclip upper section of trim (A).

Take out the trim (1).

GETtheMANUALS.org

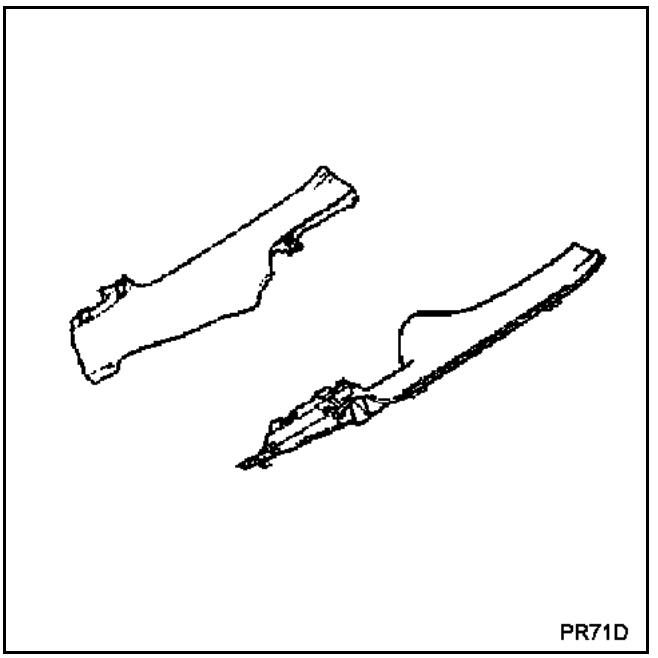

REMOVAL

Remove:
– the centre pillar lower trim,
– the rear seat squab,

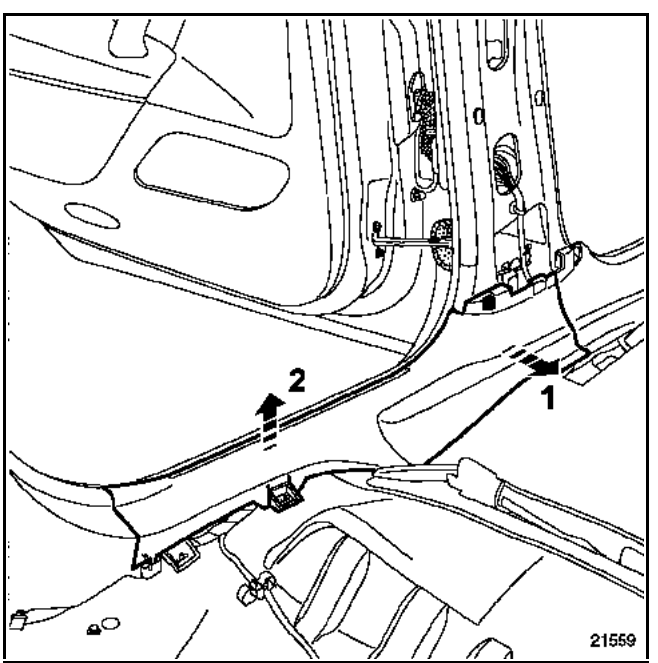

Move the front seat as far forward as possible.

Release:
– the front section of trim (1),
– the trim at (2).

GETtheMANUALS.org

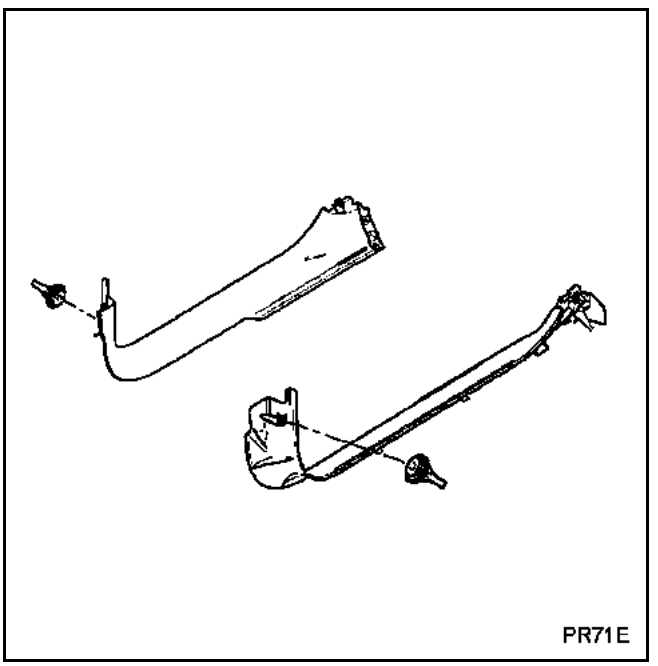

REMOVAL

Remove:
– the b-pillar lining,
– the rear door sill trim (partially).

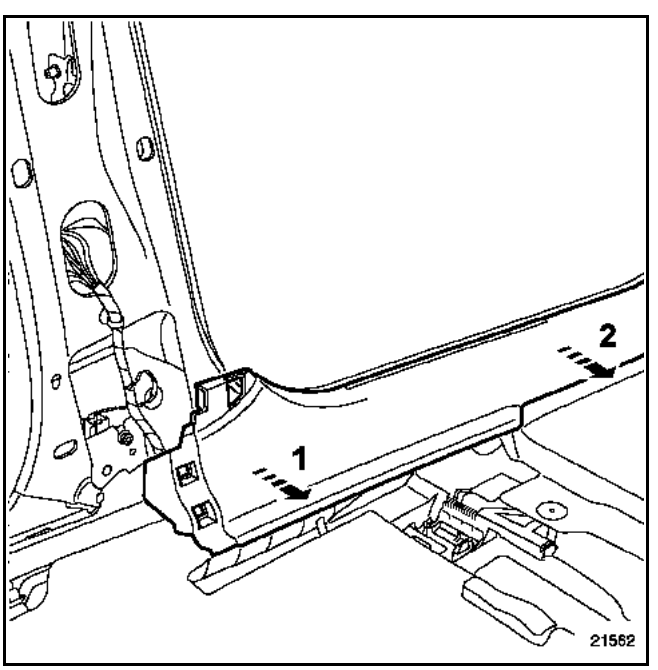

Move the front seat as far back as possible.

Unclip the trim over its entire length (1).

Take out the trim (2).

GETtheMANUALS.org

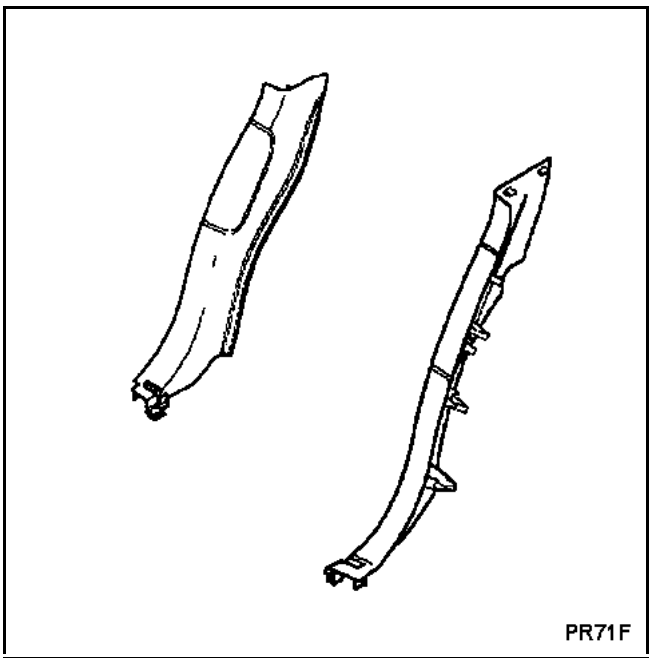

REMOVAL

CAUTION: the rear airbag is located underneath the lining.

Partially remove the rear door seal trim.

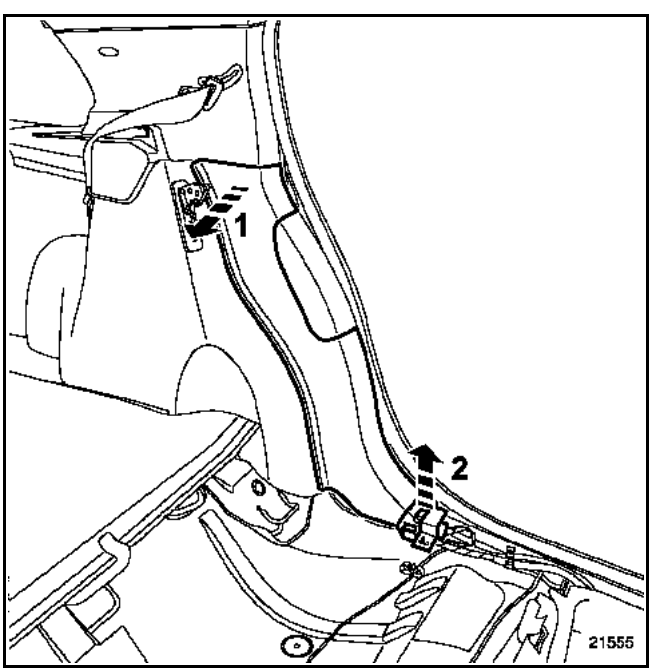

Unclip the trim over its entire length (1).

Take out the trim (2).

GETtheMANUALS.org

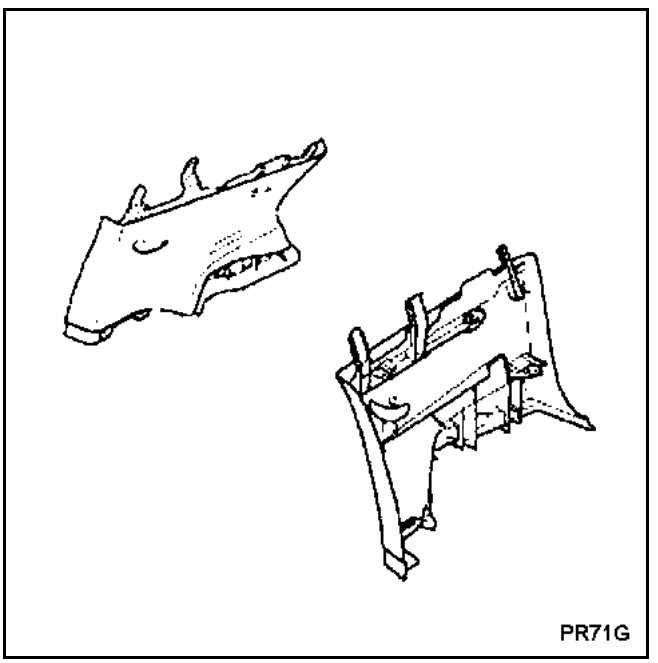

REMOVAL

Remove:
– the luggage compartment and rear door frame seal (partially),
– the rear parcel shelf,
– the lower sill upper section (partially).

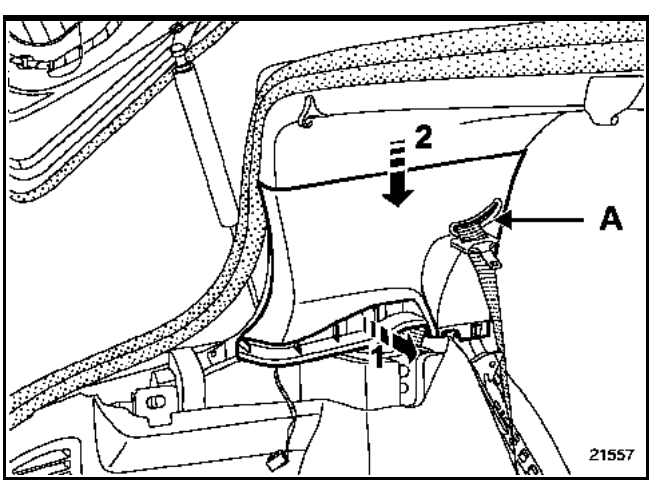

Unclip trim (1).

Remove the upper section of trim (2).

Unclip:
– seat belt retractor cover (A),
– the seatbelt up to the seatback to completely remove the trim.

GETtheMANUALS.org

REMOVAL

Lift up the boot carpet.

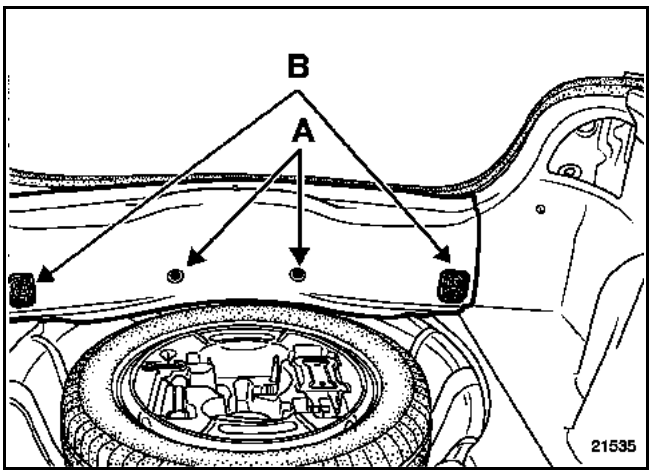

Remove:
– clips (A),
– lashing points (B).

Pull the trim upwards.

GETtheMANUALS.org

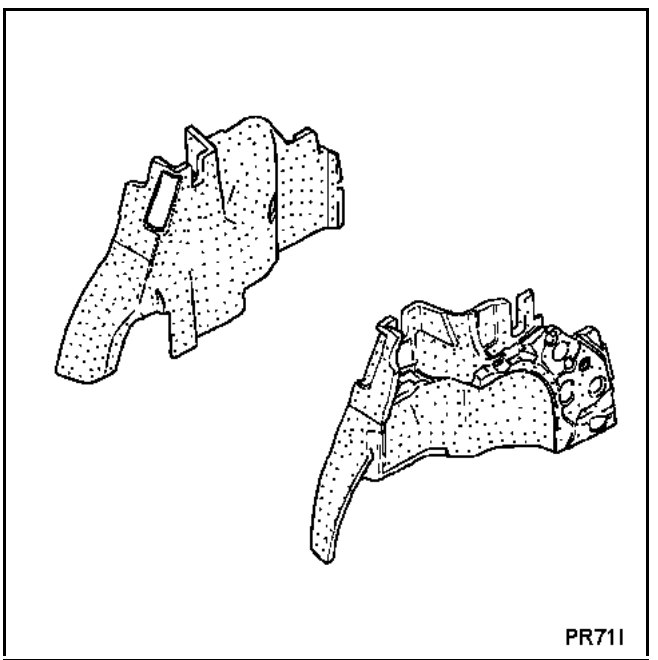

REMOVAL

Remove:
– the luggage compartment seal (partially),
– the rear end panel lining,
– the side rear parcel shelf,
– the boot carpet.
– the rear door seal trim (partially),

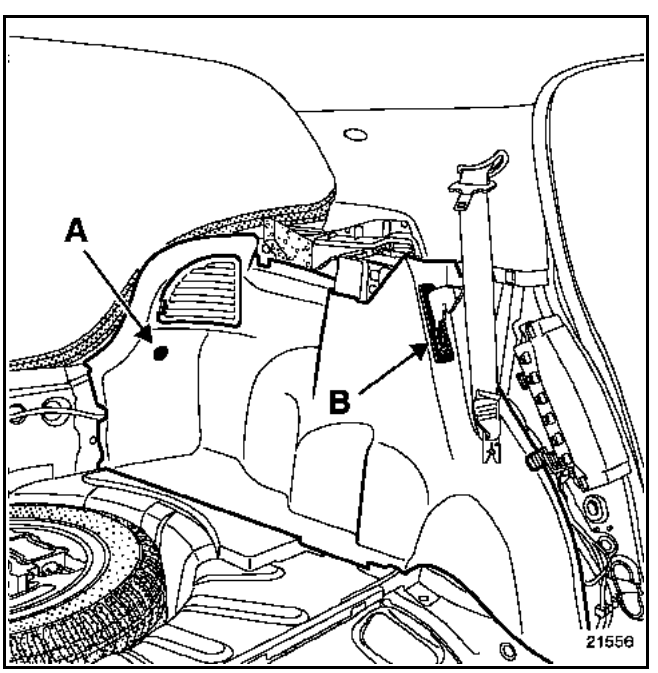

– clip (A),
– cover (B),
– the trim.

GETtheMANUALS.org

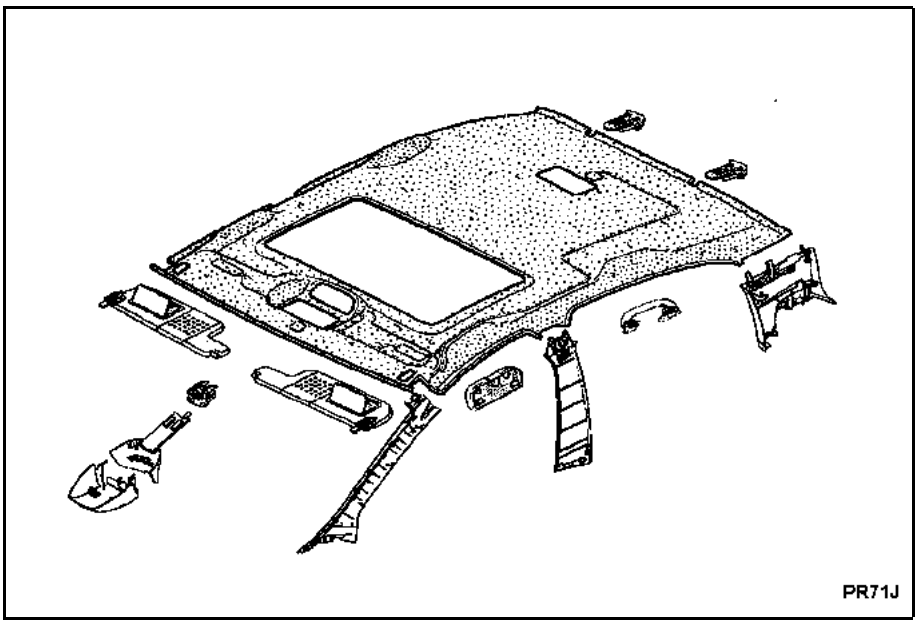

REMOVAL

IMPORTANT: before removing the headlining, it is essential to lock the airbag computer using the diagnostic tool (for instructions, refer to **section 88**).

Remove:
– the luggage compartment door seal (partially),
– the four door frame seals (upper part),
– the rear side parcel shelves (**section 71A.A**),
– the rear quarter panel trims (**section 71A.G**).

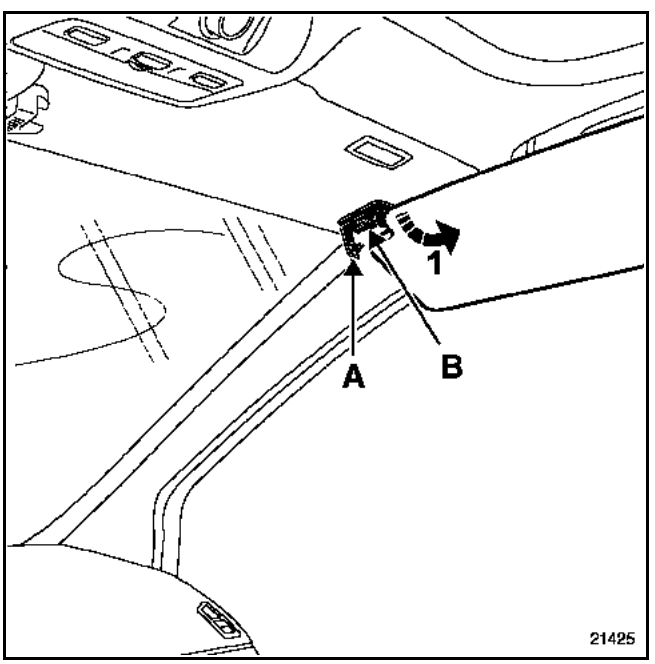

Position the sun visor towards the door.

Unclip:
– cover mounting (A),
– clip (B).

Pull the sun visor down towards the windscreen, then remove it (1).

GETtheMANUALS.org

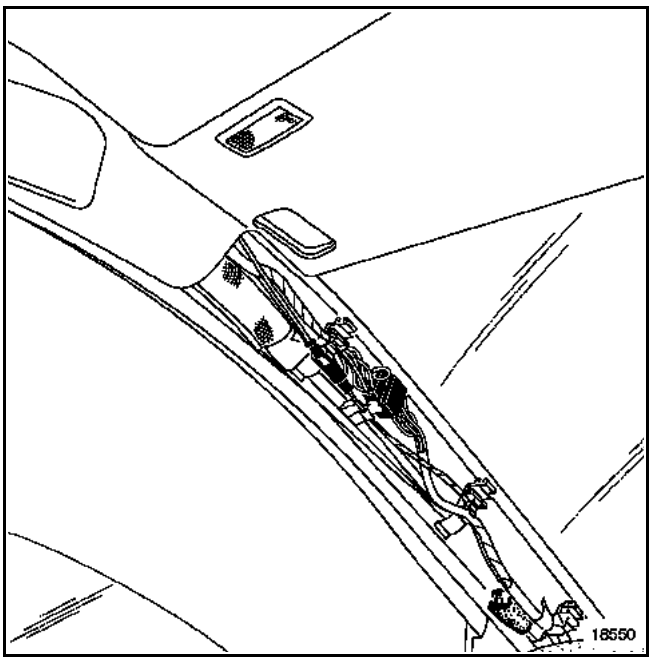

Remove the windscreen pillars (**section 71A.D**).

Disconnect the various connectors.

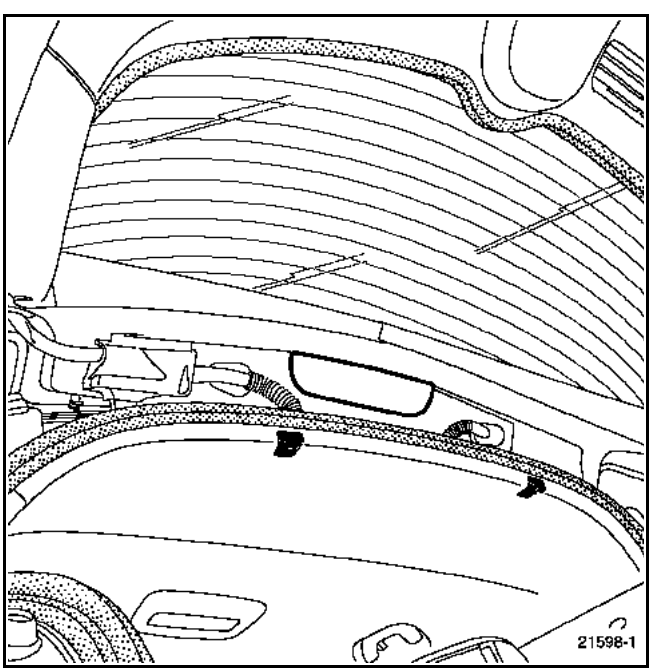

Remove the rear sun visor upper attachments (see below).

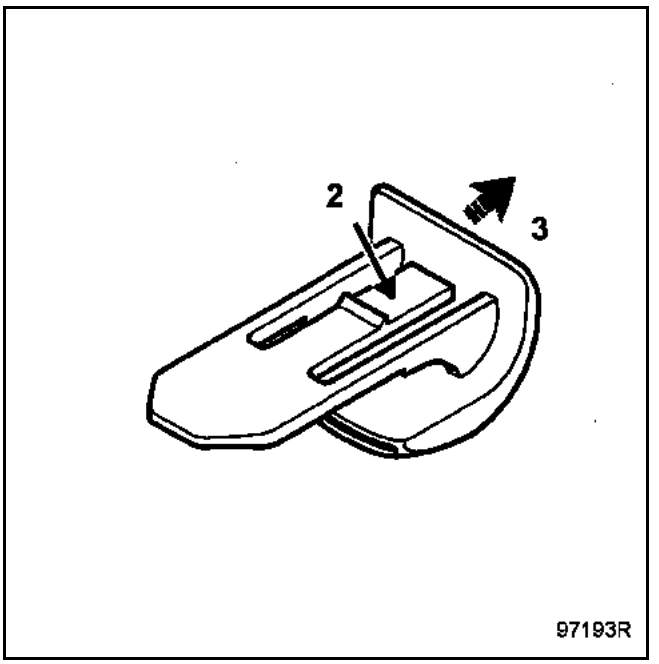

Press clips (2) and release clip (3).

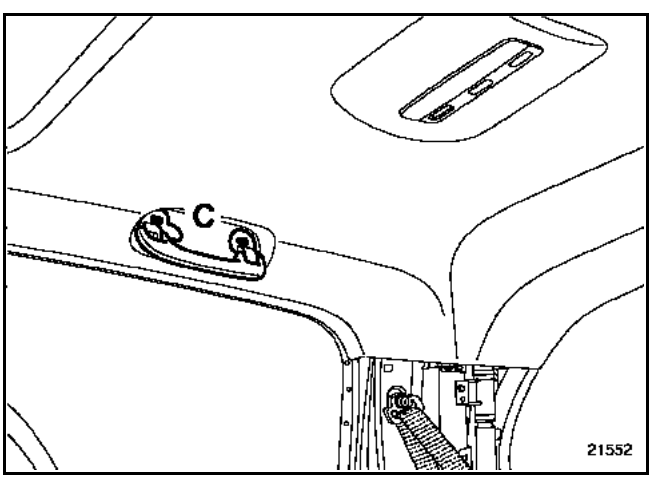

Using the tool **Car. 1597**, unclip the grab handle clips (C).

GETtheMANUALS.org

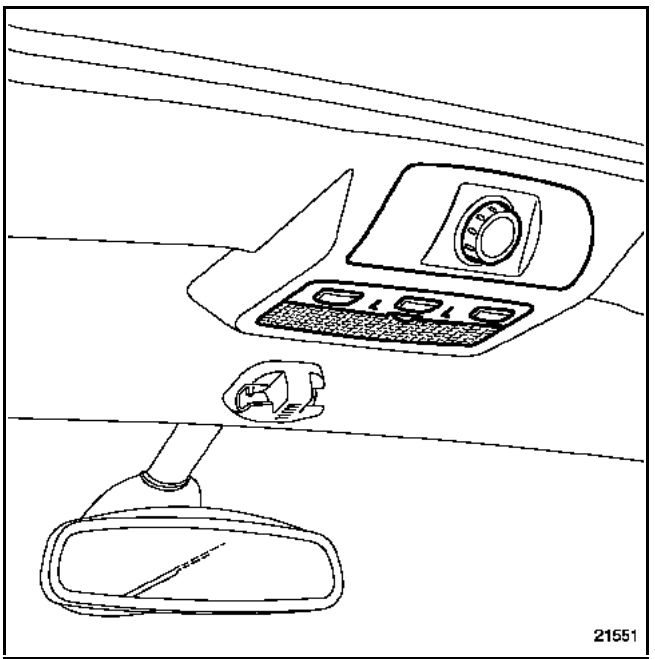

Remove the sunroof control button (if fitted).

Remove:
– the sun roof frame seal,

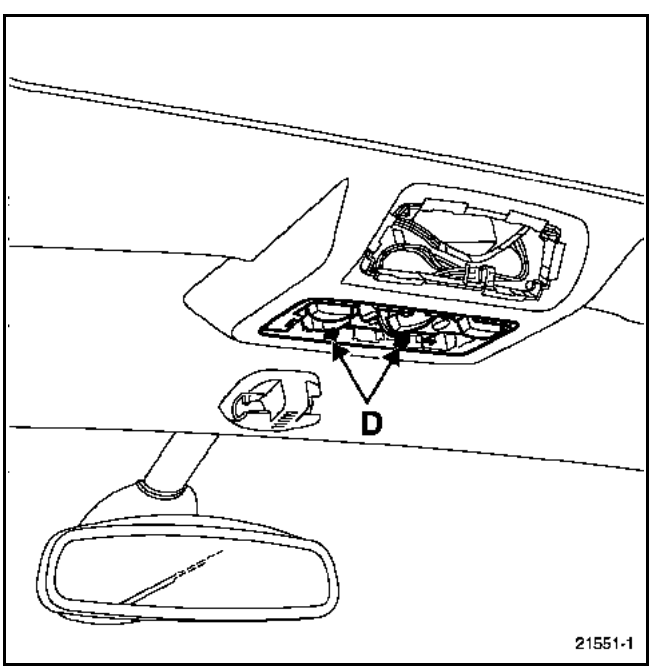

– the interior light cover, to gain access to clips (D).

Disconnect the different connectors.

Remove the interior light.

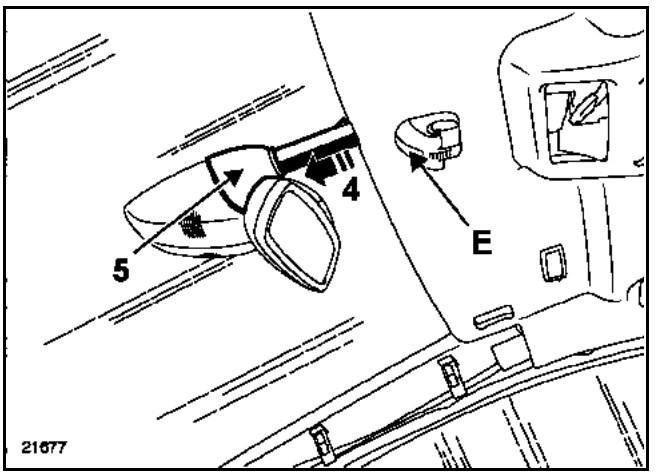

Release:
– the upper shell casing (4), applying pressure to (5) then remove it,
– mounting cover (E).

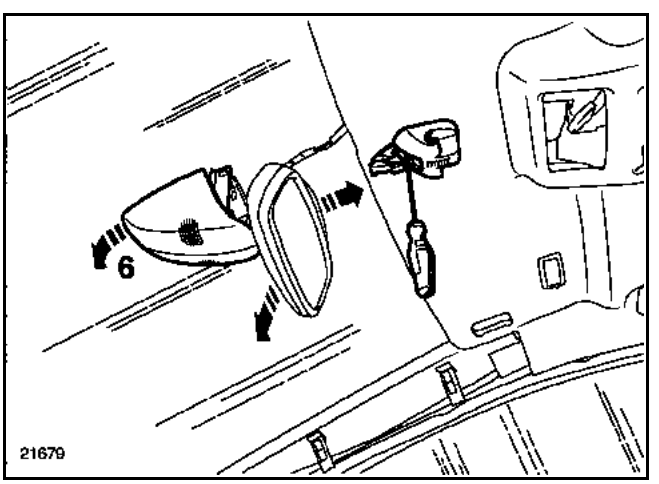

Remove lower shell casing (6).

Using a flat screwdriver, remove the sun visor central mounting.

Disconnect the switch connector (if fitted).

GETtheMANUALS.org

The remaining operations require two people.

Recline the seatbacks and from the boot, remove the lining.

REFITTING

From the boot, fit the headlining, align it by lifting the grab handles.

Complete refitting in reverse order to removal.

GETtheMANUALS.org

REMOVAL

NOTE: removing the speaker grilles entails the removal of the door trim.

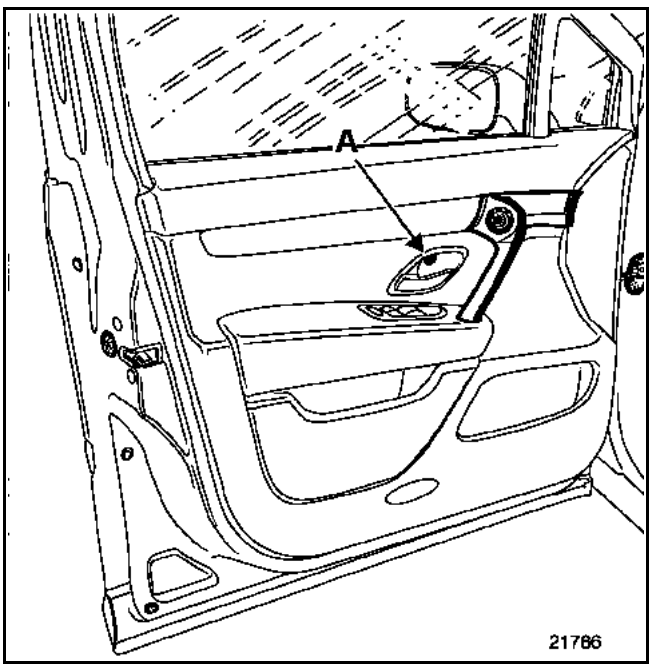

Remove:
– the pull handle cover, then disconnect the door mirror control connector,
– the blanking cover and interior opening control mounting bolt (A),

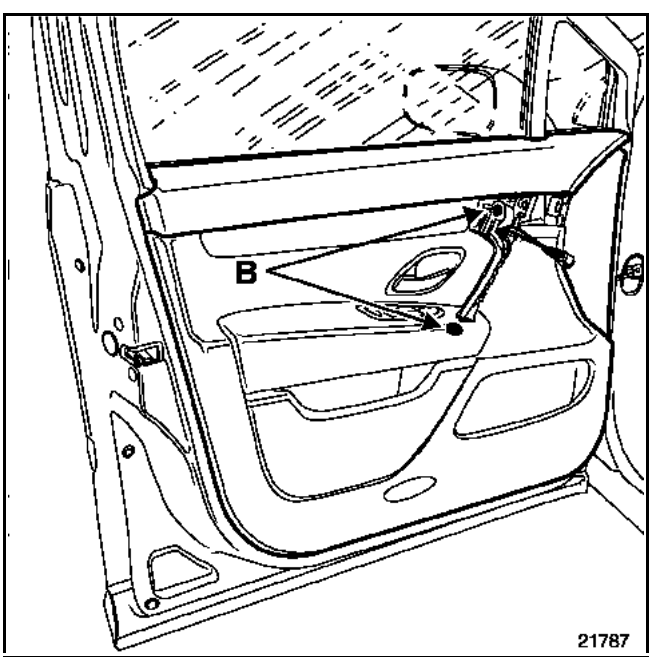

– the two pull handle mounting bolts (B).

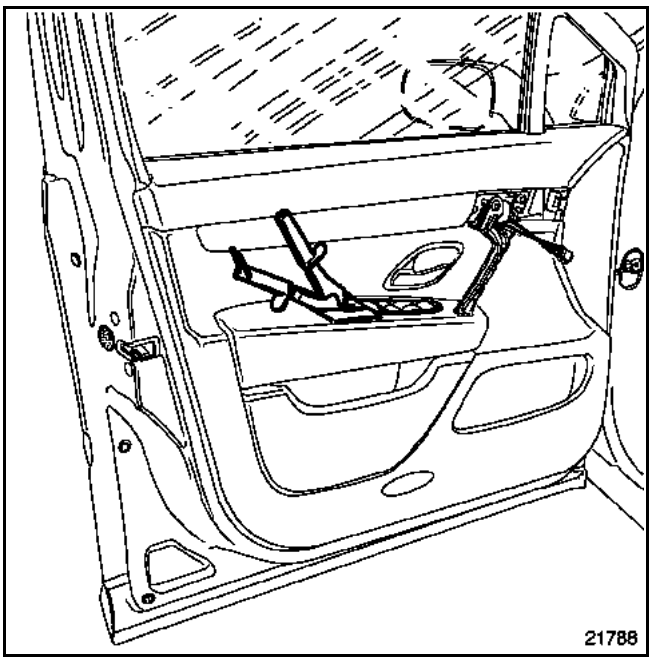

Protect the lining (eg. mastic knife), and unclip the electric window plate (at the rear section) using the unclipping tool, then disconnect the connectors.

Remove the lining panel (nine clips) using the unclipping tool.

GETtheMANUALS.org

Another procedure for removing the electric window plate

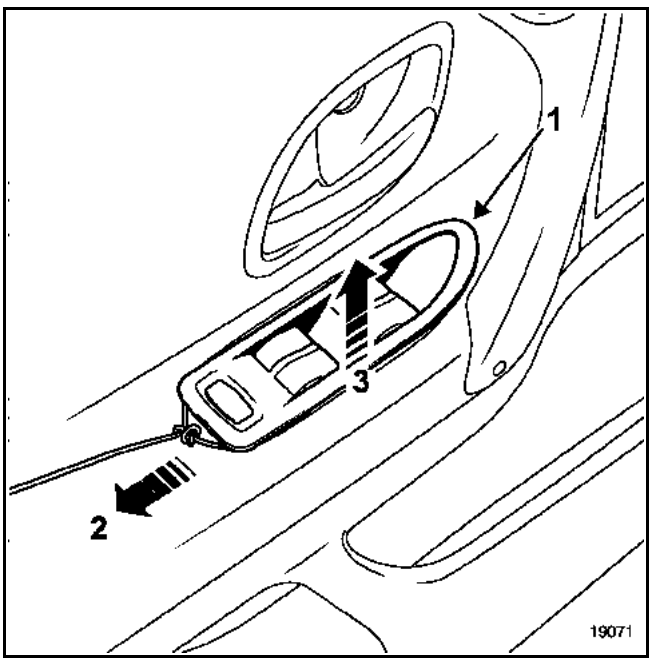

Make a sliding knot at the end of an insulated electric wire of (**3 mm**) then slip the other end of the wire into the knot.

Insert the loop created in (1) between the lining and the lip of the plate, around its entire perimeter.

Pull on the end of the wire at (2), simultaneously releasing the plate in the direction of (3) so as to flatten the strips against the plate.

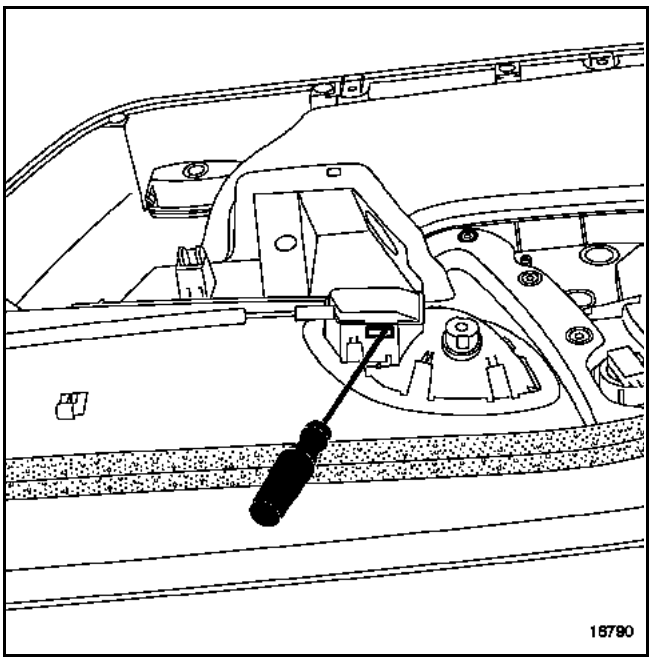

Using a flat screwdriver, unclip the interior opening control cable mounting cover.

Disconnect the speaker and the door light.

Remove:
– the panel,

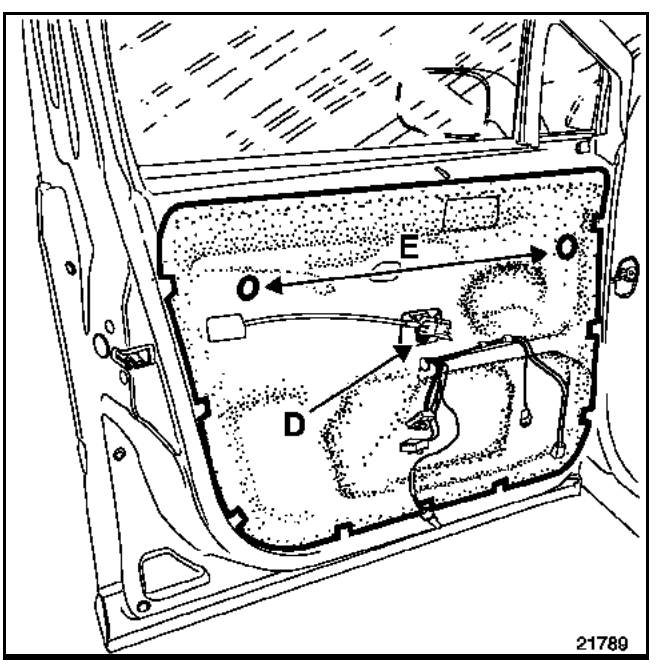

– screw (D) then remove the bracket for the electric window plate,
– the two guides (E).

Carefully peel off the sealing film.

When this is being removed, the sealing mastic must stay on the film.

GETtheMANUALS.org

REFITTING

Take the sealing film and center it using the two guides (E).

Stick the film down all along its edges.

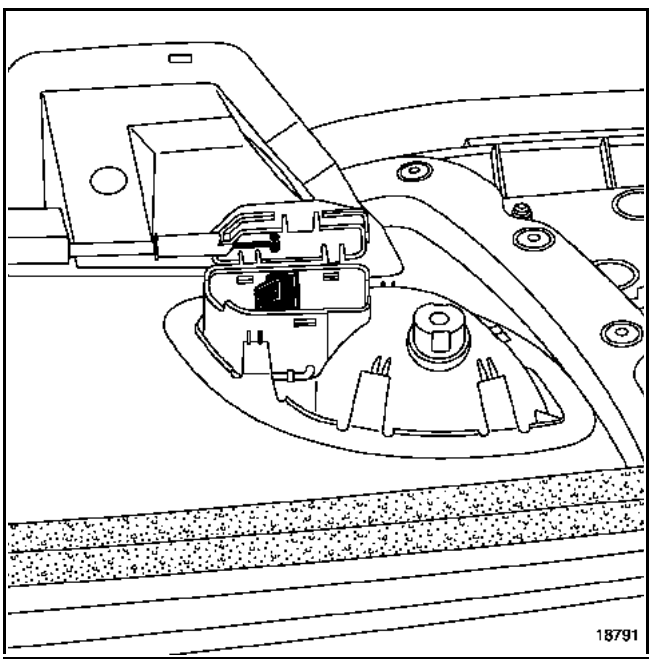

Keep the interior opening control in the closed position.

Take the cover and cable, position them and clip the assembly in place.

REMOVINGTHE LINING TRIM

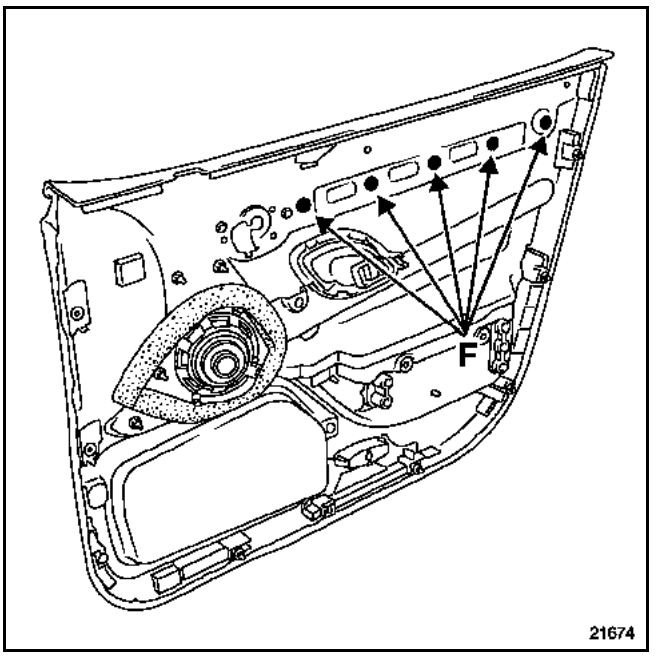

Remove mountings (F) then release the lining trim.

GETtheMANUALS.org

REMOVAL

NOTE: removing the speaker grilles entails the removal of the door trim.

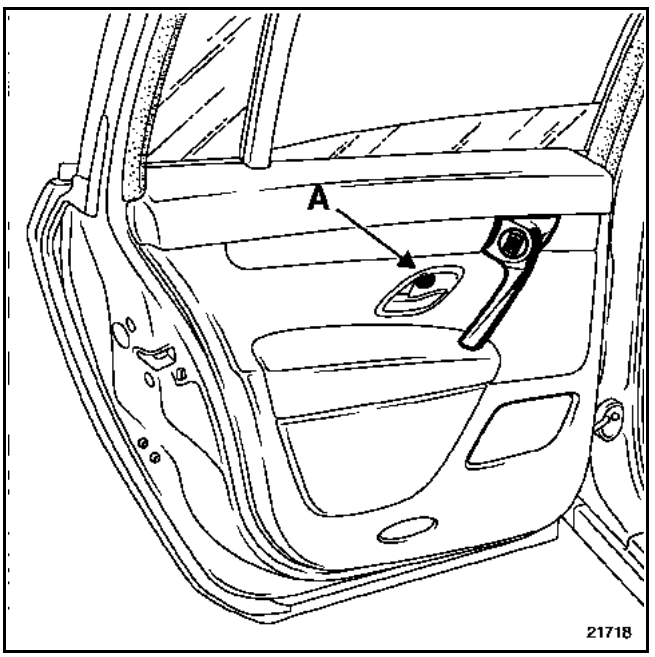

Remove:
– the pull handle cover, then disconnect the window lift control connector,
– the blanking cover and mounting bolt (A) of the interior opening control,

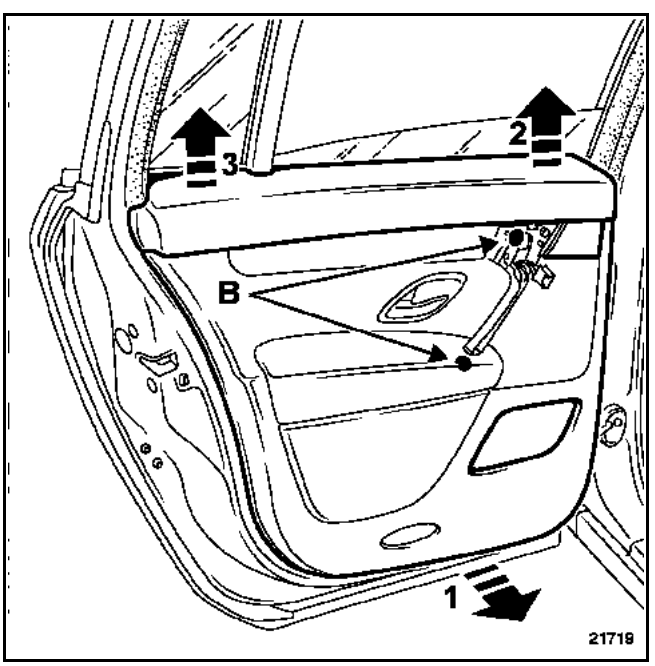

– the two pull handle mounting bolts (B).

Remove lining panel (1) (eight clips) using the unclipping tool.

Partially release the trim at (2) then (3).

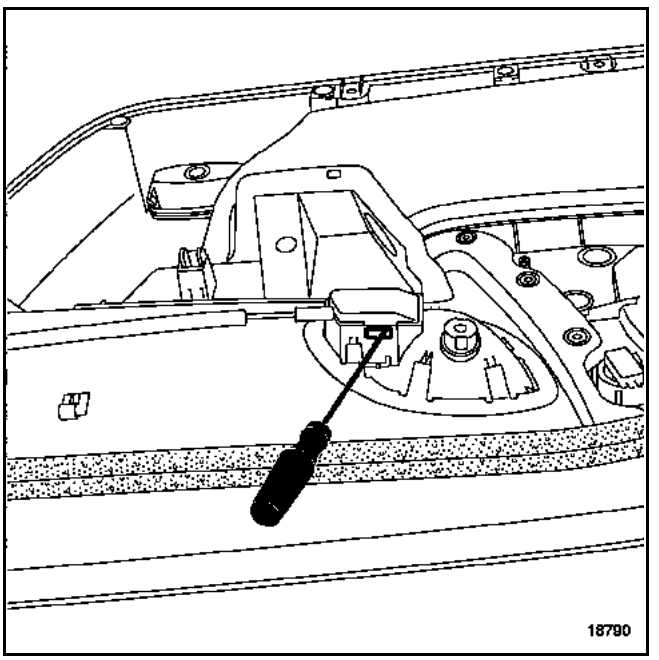

Using a flat screwdriver, unclip the interior opening control cover.

Disconnect the speaker and the door light.

Remove the panel.

GETtheMANUALS.org

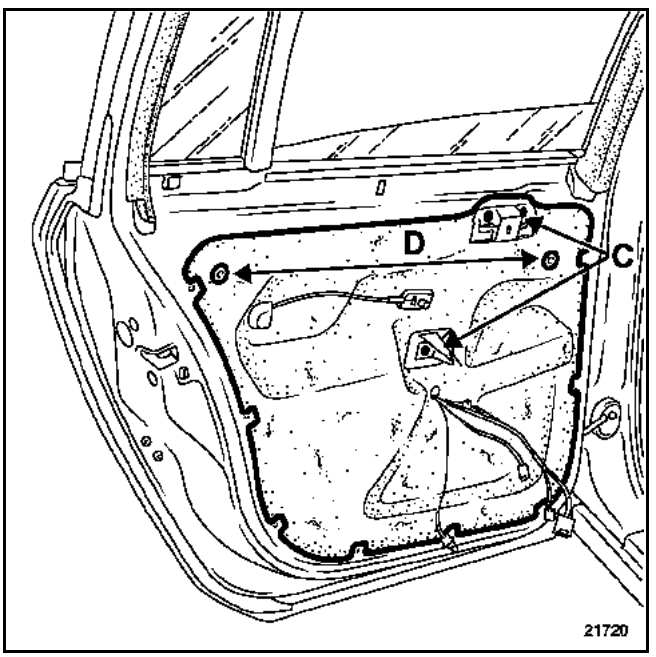

Remove:
– the two brackets (C),
– the two guides (D).

Carefully peel off the sealing film.

The sealing mastic must remain stuck to the film.

REFITTING

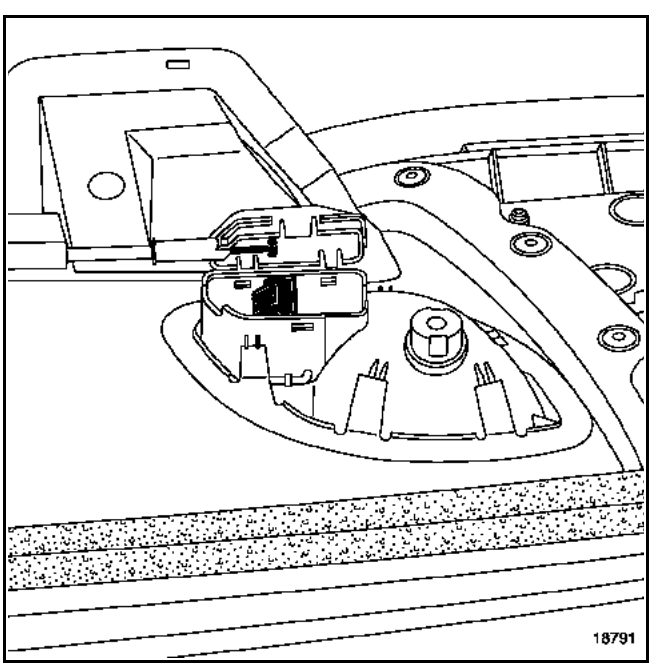

Keep the interior opening control in the closed position.

Take the cover and cable, position them and clip the assembly in place.

REMOVINGTHE SUN VISOR

NOTE: removing the sun visor entails the removal of the door trim.

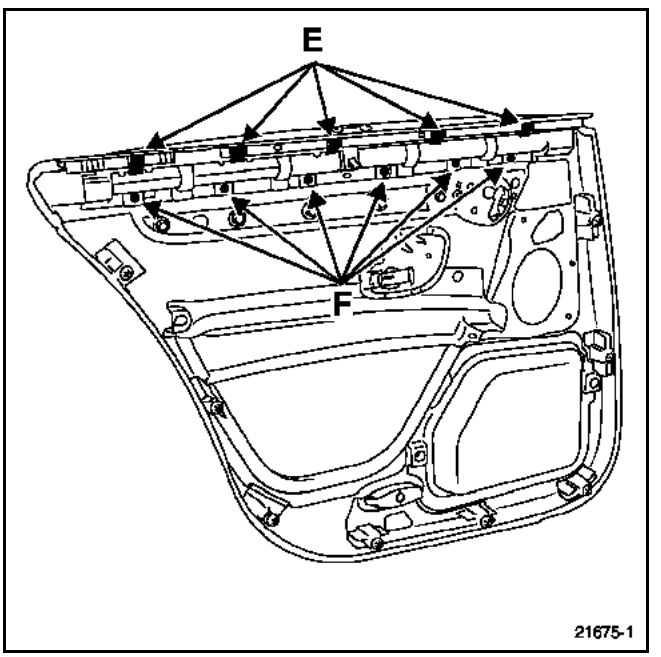

Release:
– the five clips (E) (partially),
– the six mountings (F).

GETtheMANUALS.org

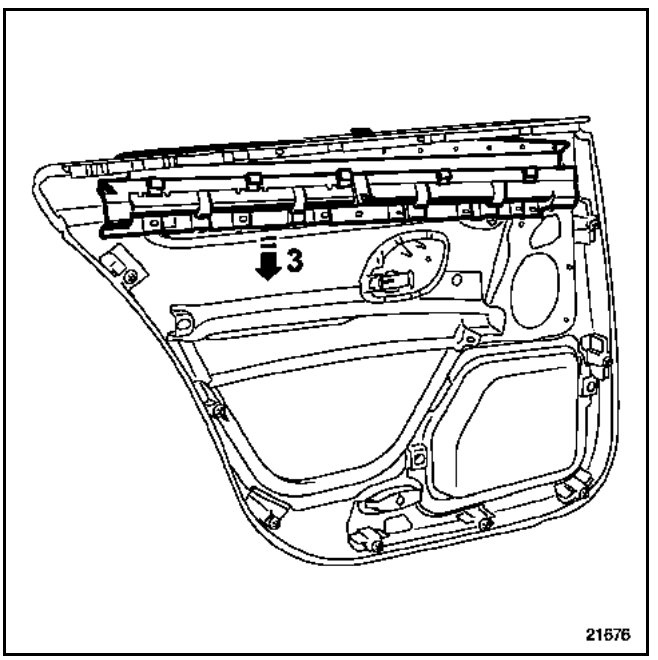

Gently pull the top of the lining away at the top.

Release the sun visor (3).

REMOVING THE LINING TRIM

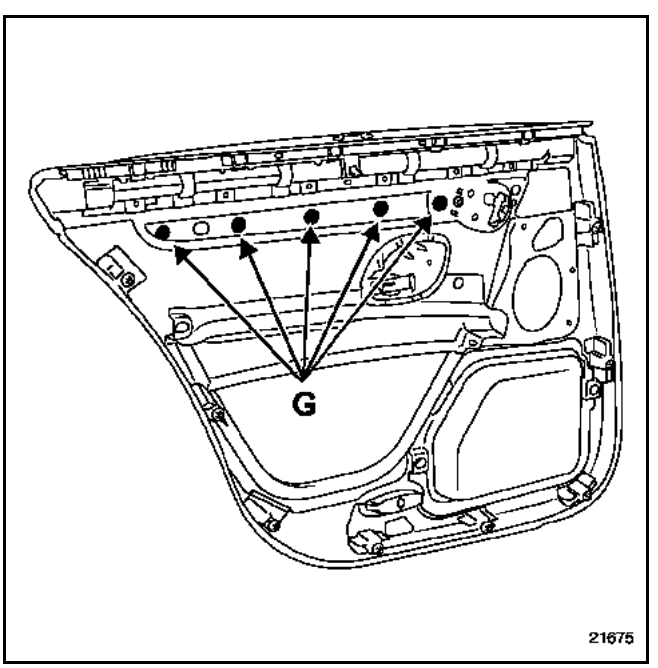

Remove mountings (G) then release the lining trim.

GETtheMANUALS.org

REMOVAL

Remove the door trim (**section 72A.A**).

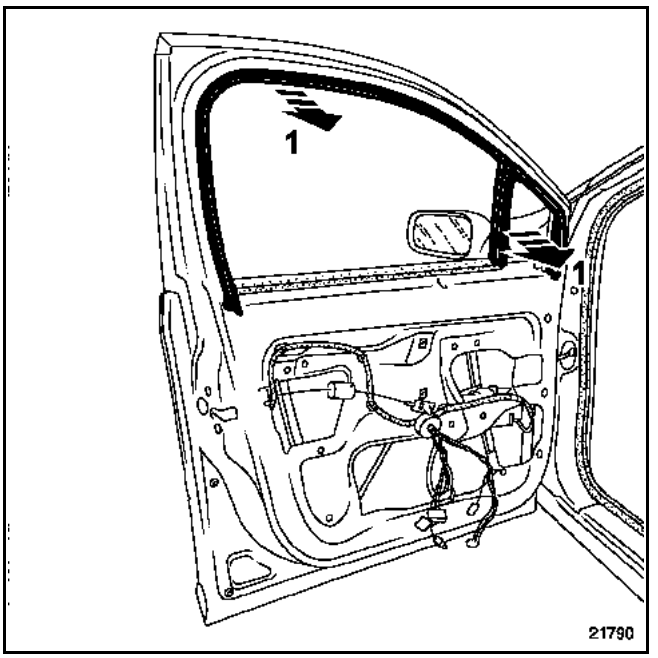

Remove trim (1).

REMOVING THE ADHESIVE TRIM

Remove:
– the door upright exterior embellishers (**section 56A.C**);
– the exterior frame seal (**section 65A.A**).

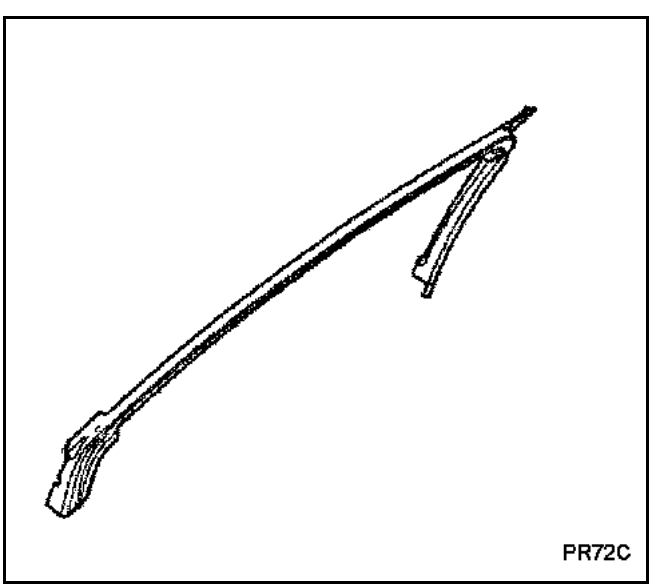

Detach the trim.

NOTE: replace the adhesive trim each time it is removed.

GETtheMANUALS.org

REMOVAL

Remove the door trim (**section 72A.B**).

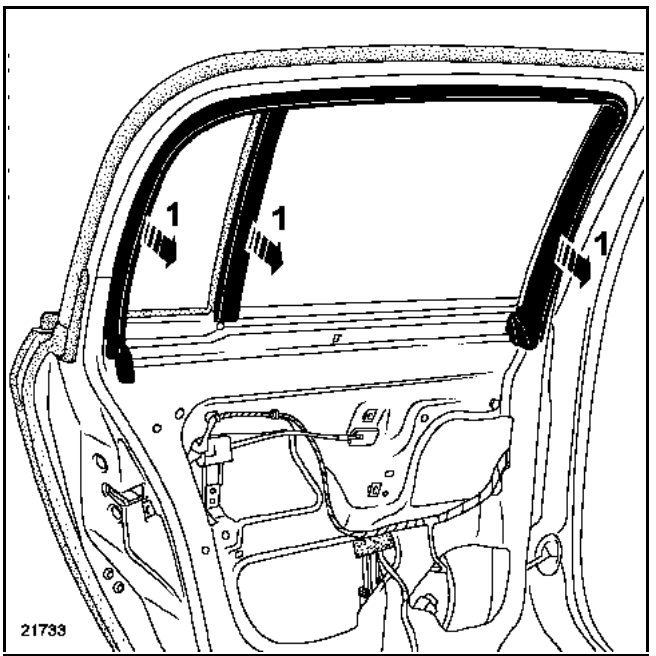

Remove trim (1).

REMOVING THE ADHESIVE TRIM

Remove:
– the door upright exterior embellishers (**section 56A.D**);
– the exterior frame seal (**section 65A.B**).

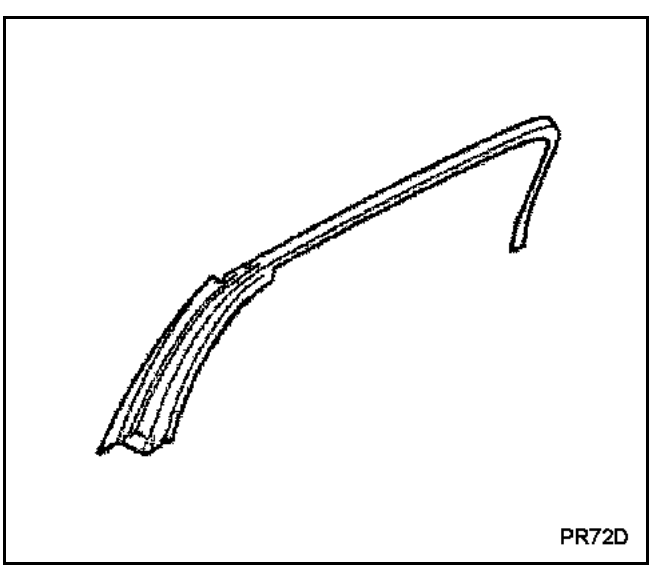

Detach the trim.

NOTE: replace the adhesive trim each time it is removed.

GETtheMANUALS.org

REMOVAL

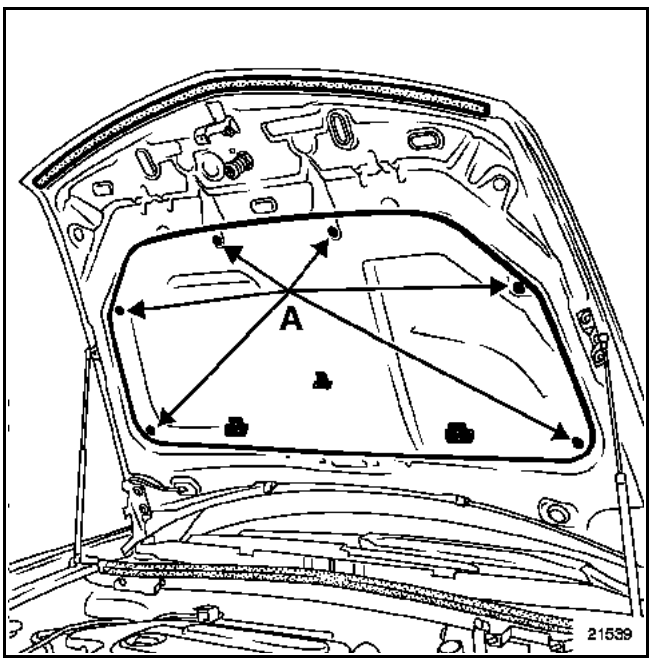

Using a pair of clip removal pliers, unclip retaining clips (A).

Remove the lining.

GETtheMANUALS.org

REMOVAL

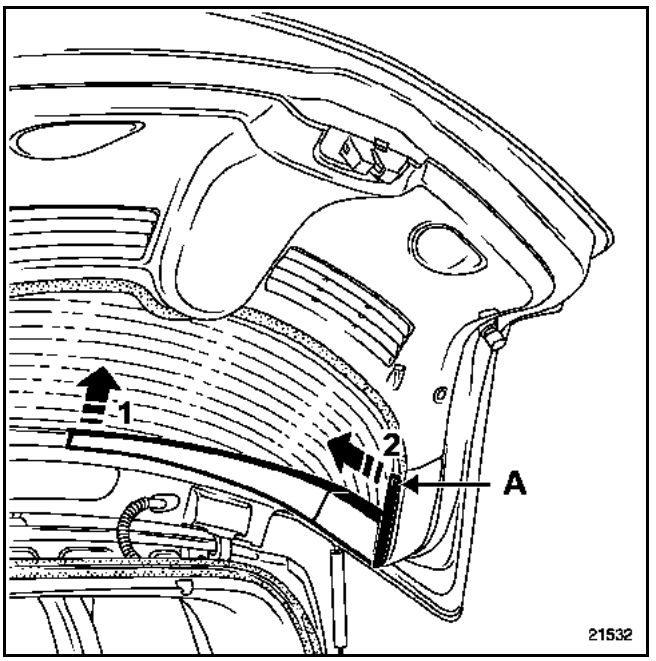

Remove clip (A).

Release the right-hand section of the rear screen trim at (1) then (2).

The removal procedure for the left-hand side is the same.

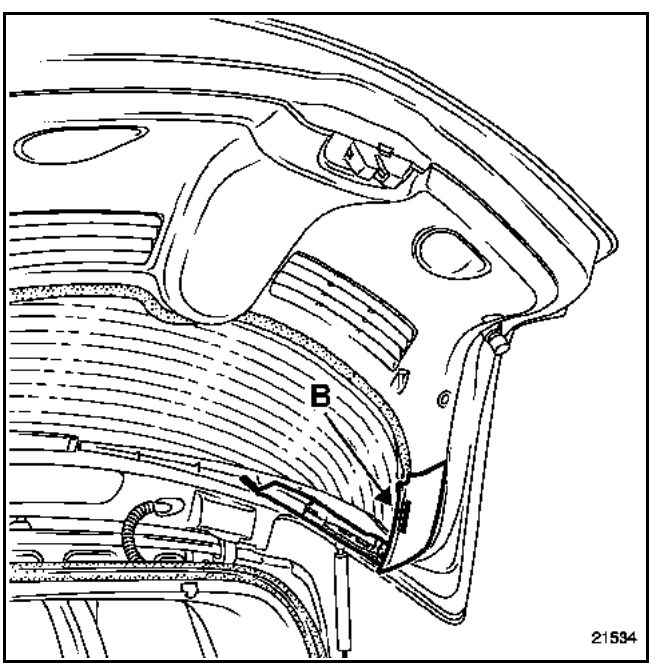

Release clip (B); remove the trim.

The removal procedure for the left-hand side is the same.

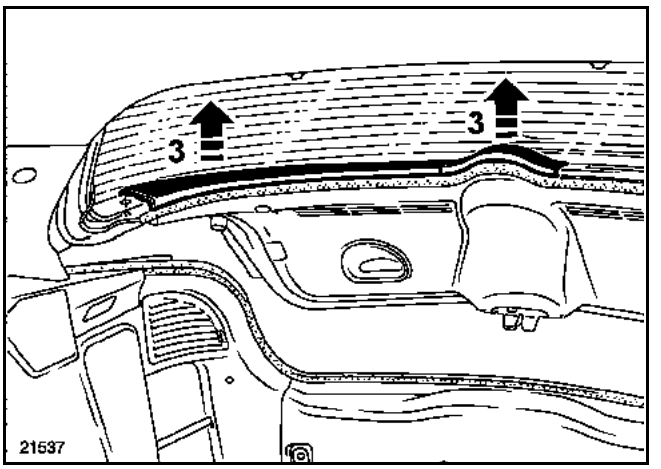

Release trim (3).

The removal procedure for the left-hand side is the same.

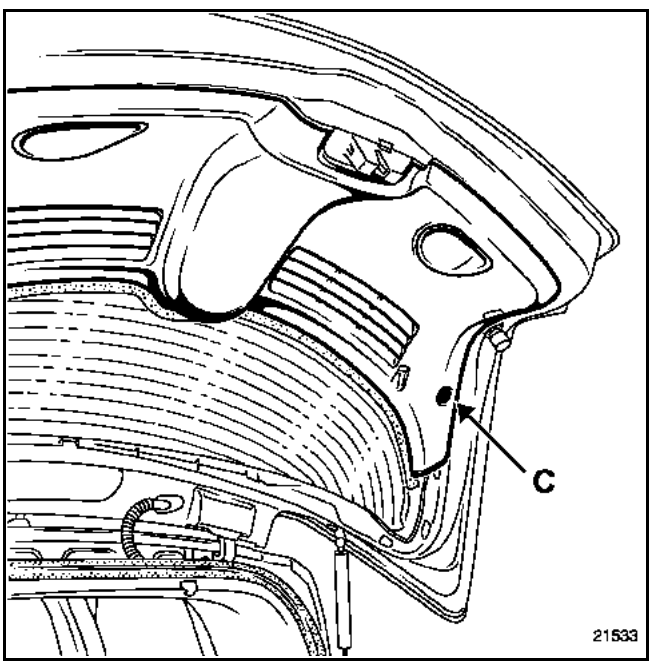

Release clips (C).

Remove the trim using the clip removal pliers.

REFITTING

Before refitting the trims, check that the retaining clips are in good condition.

To refit, proceed in the reverse order to removal.

GETtheMANUALS.org

SPECIAL NOTE: for the removal of the rear lights

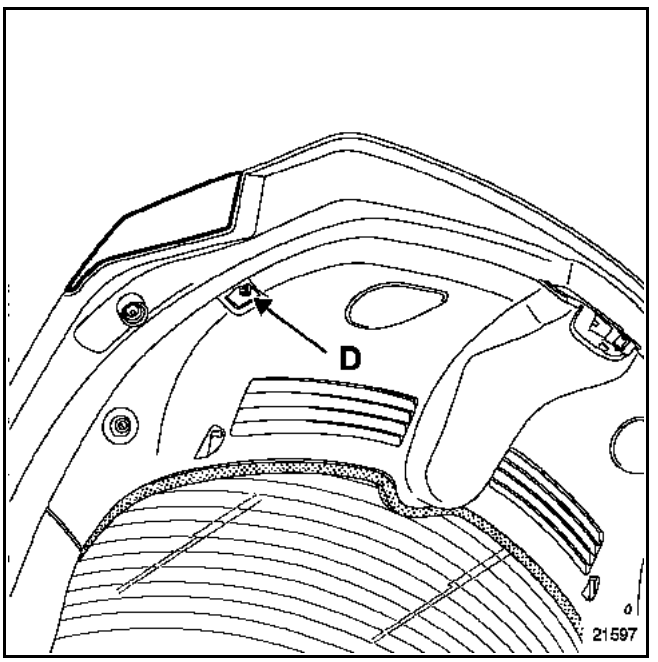

Remove the blanking cover and mounting screw (D).

Release the light and disconnect the connector.

GETtheMANUALS.org

REMOVAL

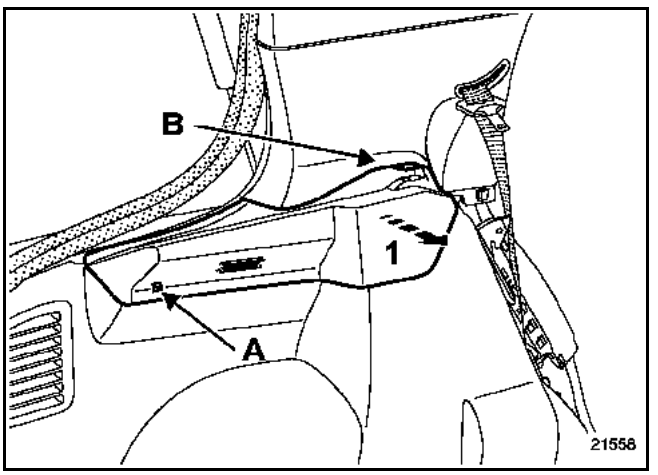

Partially remove the rear luggage compartment seal.

Fold down the rear seatback.

Remove bolt (A).

Hold rear quarter panel trim (B) in place.

Unclip parcel shelf (1).

Disconnect the boot lighting connector.

GETtheMANUALS.org

IMPORTANT: before removing the seat, lock the computer using the diagnostic tool. When this function is activated, all the ignition lines are inhibited and the air bag warning light on the instrument panel comes on.

IMPORTANT: pyrotechnic systems (air bags and pretensioners) must not be handled near to a heat source or flame - they may be triggered.

REMOVAL

Put the vehicle on a lift.

Remove the headrest (tilt the seatback slightly).

Adjust:
– the seat to the forward position,
– the seat squab to the lowest position.

Protect the lower section of the step and the carpets.

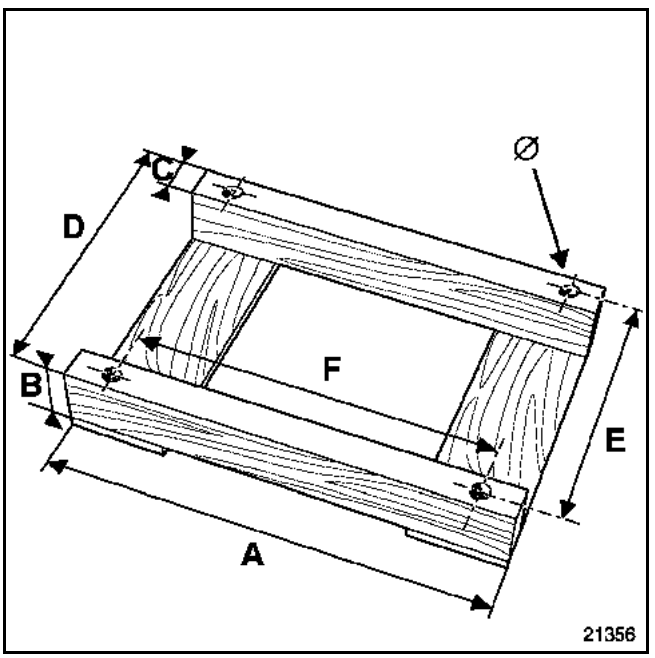

A wooden mounting manufactured in the workshop as shown in the drawing is required for storage and servicing.

A = 550 mm
B = 80 mm
C = 45 mm
D = 390 mm
E = 345 mm
F = 465 mm
∅ = 20 mm

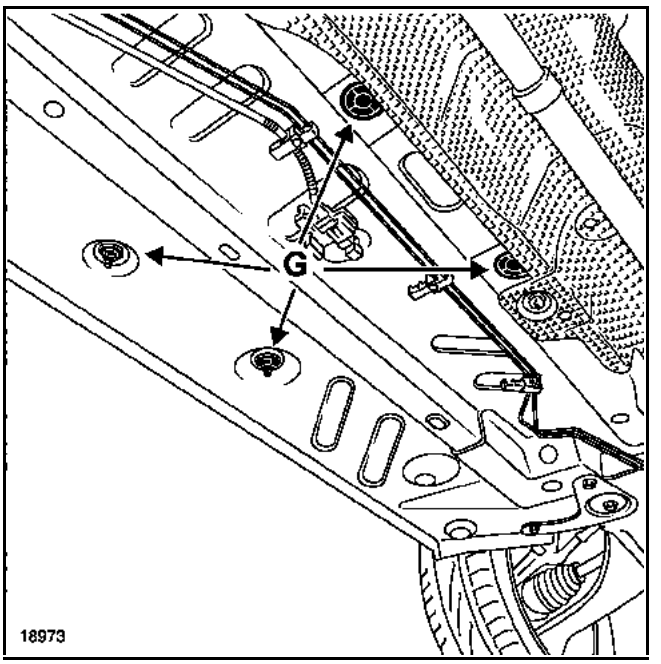

Remove:
– the two blanking covers and the four underbody mountings (G),
– the seat (requires two people).

REFITTING (requires two people)

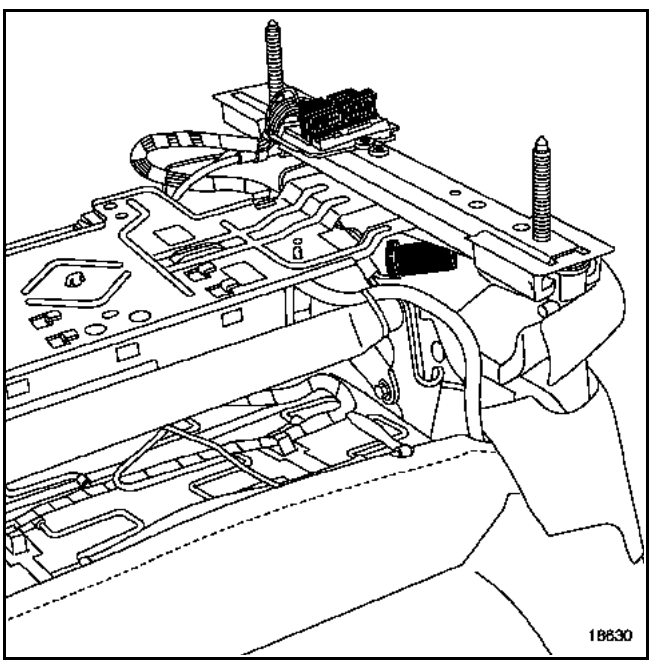

IMPORTANT: before removing the seat, visually check the condition of the connectors on the seat frame and on the body

GETtheMANUALS.org

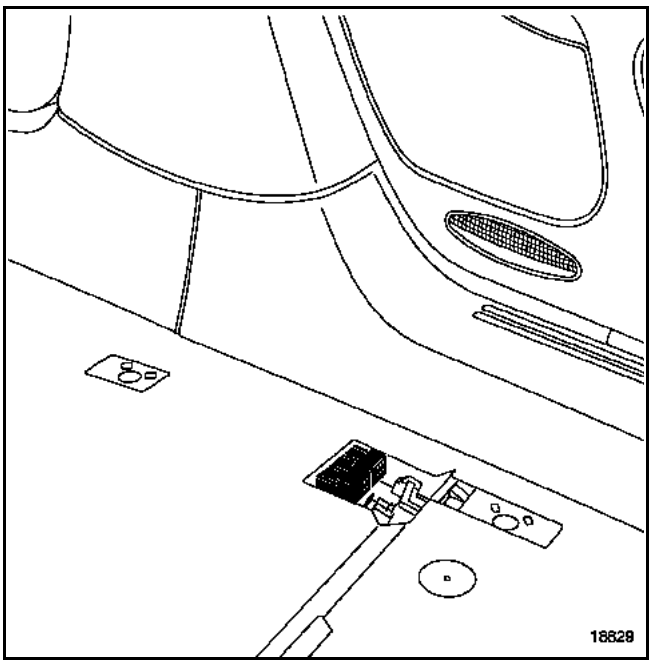

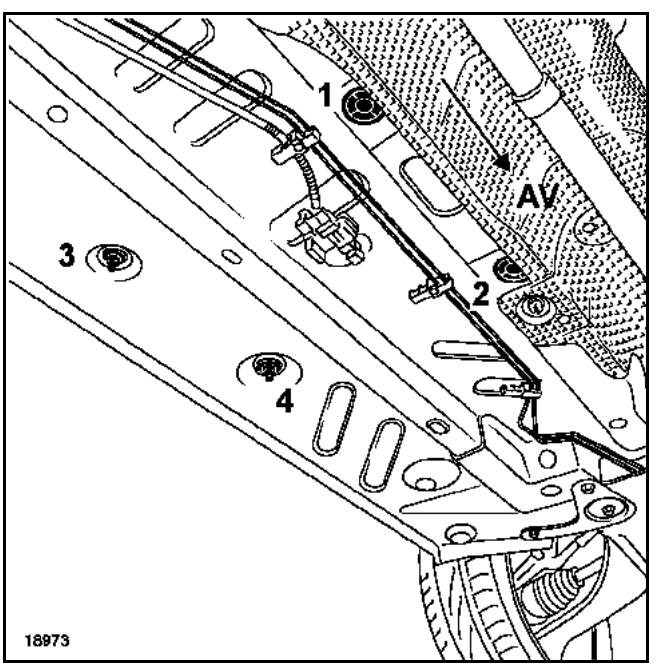

IMPORTANT: it is crucial to respect the order of tightening of the seat.

TIGHTENING TORQUE (in N.m)	▽
Front seat mounting nuts	**44**

Unlock the computer using the diagnostic tool and carry out a safety check.

GETtheMANUALS.org

REMOVAL

Remove:
– the whole seat (**section 75A.A**) (respect the safety guidelines),
– the seatback trim (**section 77A.A**),
– the seat squab trim (**section 77A.B**),
– the wiring.

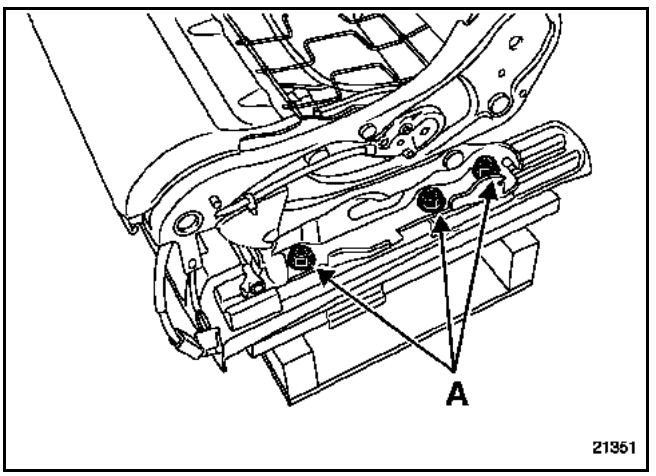

Remove bolts (A) and separate the frames from the runners.

SPECIAL FEATURE OF ELECTRIC VERSION

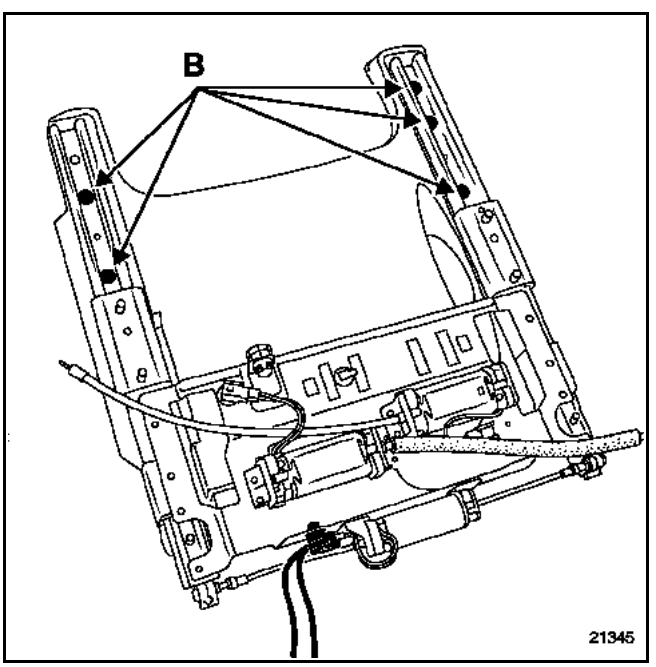

Using a battery and suitable wiring (manufactured in the workshop), activate the motor to move the plate forward and gain access to the bolts (B).

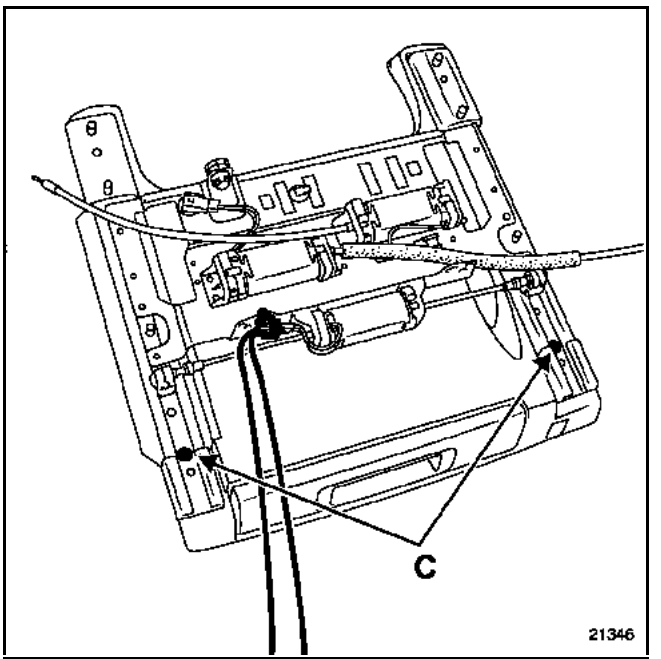

Run the motor to move back the plate and provide access to the bolts (C).

Solution when the runner motor stops working

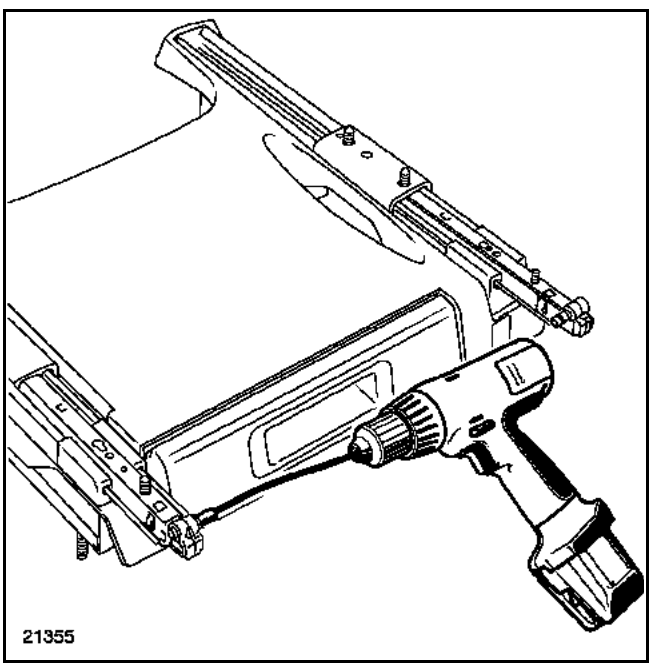

Move the runners back or forth using a screwdriver and one of the motor cables to access the mountings.

Release the runner-plate assembly.

GETtheMANUALS.org

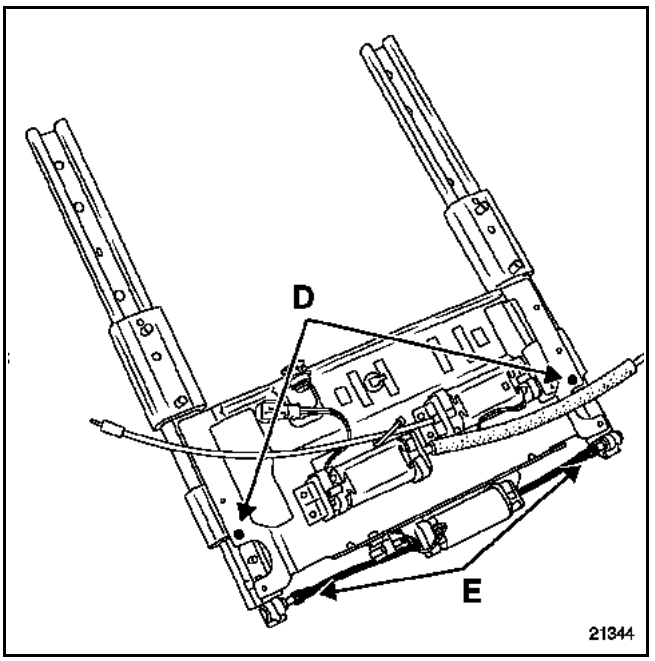

Release:
– the two rivets (D),
– the two guides (E).

REFITTING

IMPORTANT: respect the order of tightening of the runner-podium mountings.

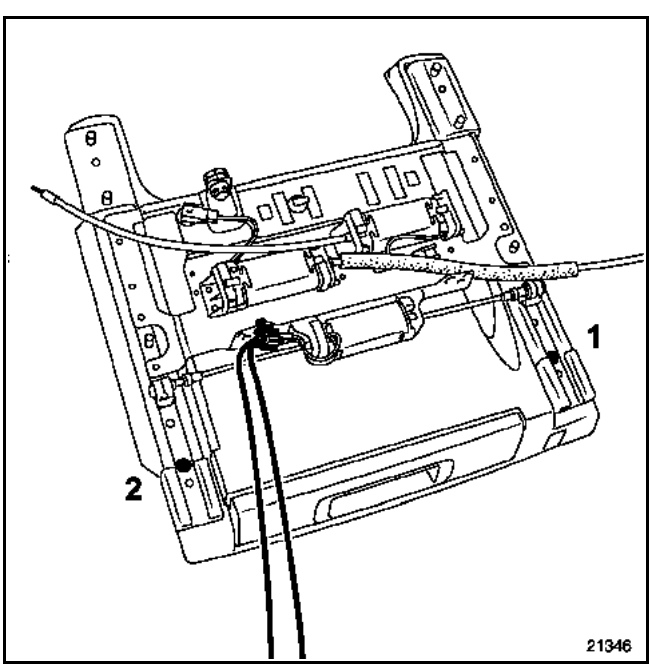

Move the motor plate back and screw on at (1) then (2).

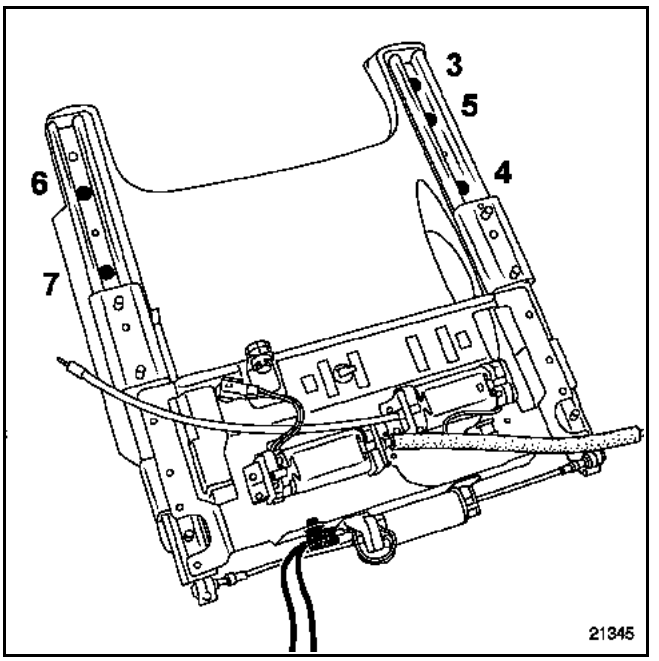

Pull the motor plate as far forwards as possible and follow the order of tightening.

TIGHTENING TORQUES (in N.m)	
Runner-podium mounting nuts	21
Frame-runner mounting nuts	21

GETtheMANUALS.org

IMPORTANT: before removing the motors, it is advisable to memorize the direction of mounting to avoid reversing the order during refitting (e.g. supply outlet).

REMOVING UPPER AND LOWER SEATBACK MOTORS

Remove:
– the seat (**section 75A.A**) (respect the safety guidelines),
– the seatback trim (**section 77A.A**),

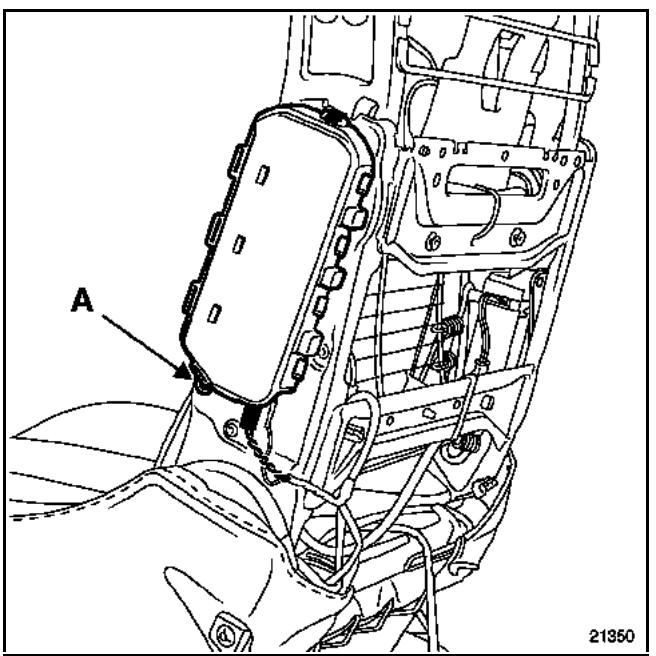

– rivet (A), then release the air bag.

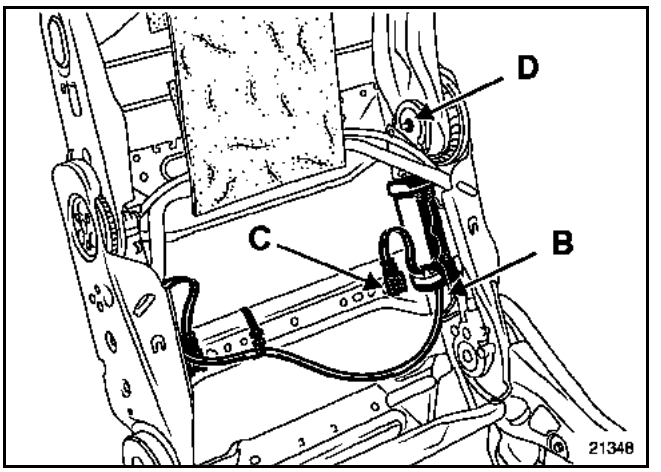

Unclip:
– cover (B),
– the clip connector (C).

Release the washer (D) and remove the axle.

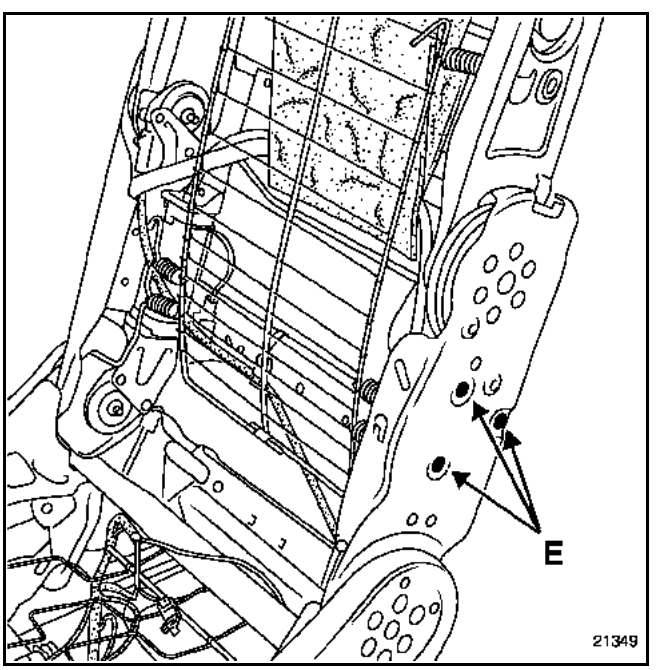

Remove the three rivets (E), then gently release the motor downwards to access the two lower rivets.

GETtheMANUALS.org

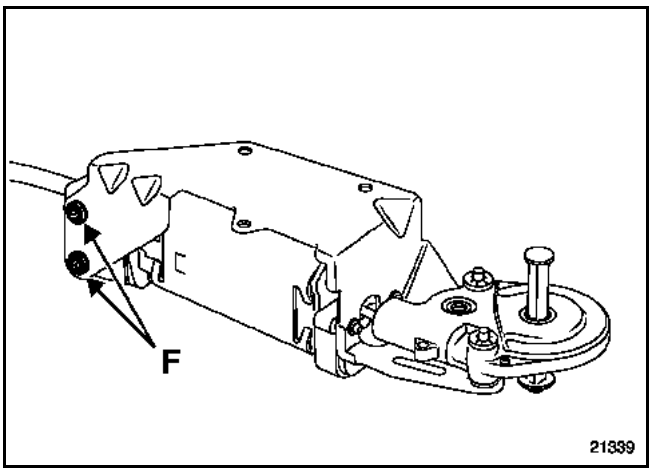

Remove the rivets (F); release the motor, then release the mounting.

REFITTING

Position the mounting-gearing assembly on the frame, then refit the motor onto the mounting.

NOTE: the rivets (F) must be refitted in reverse order (head side plastic mounting).

SPECIAL FEATURES OF THE PLATE MOTORS

REMOVAL

Remove:
- the seat **(section 75A.A), (respect the safety guidelines)**,
- the seatback trim (**section 77A**),
- the seat frame (**section 75A.B**),
- the two plate rivets.

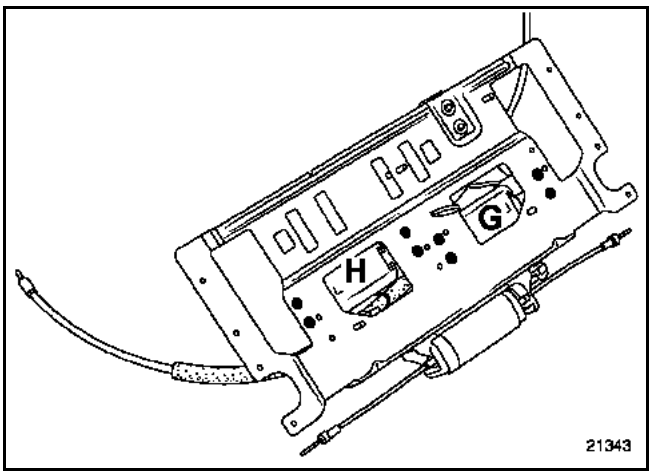

- the rivets (G); release the height adjustment motor,
- the rivets (H) and remove the tilt adjustment motor,

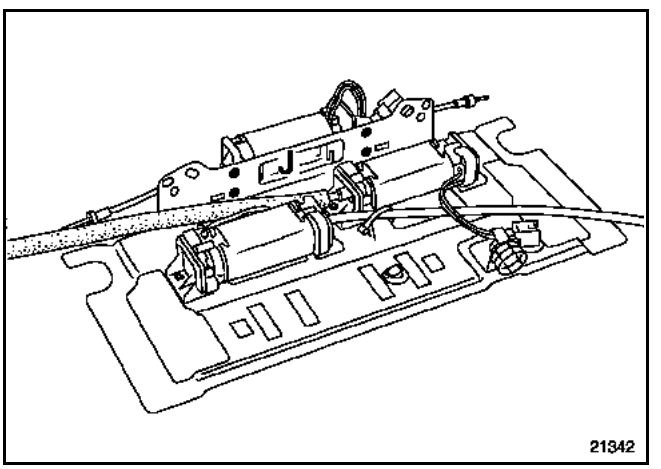

- the rivets (J); release the runner motor.

GETtheMANUALS.org

REMOVAL

Tilt the two bench seat cushions.

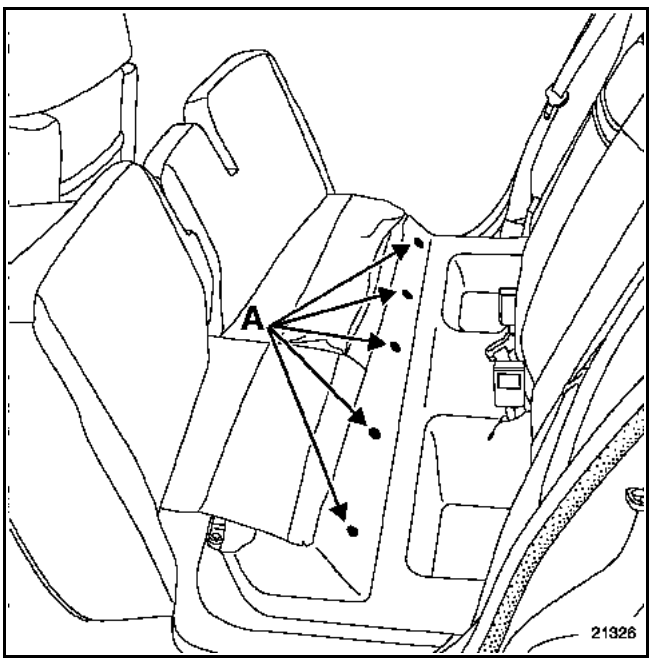

Remove the clips (A) and release the lining.

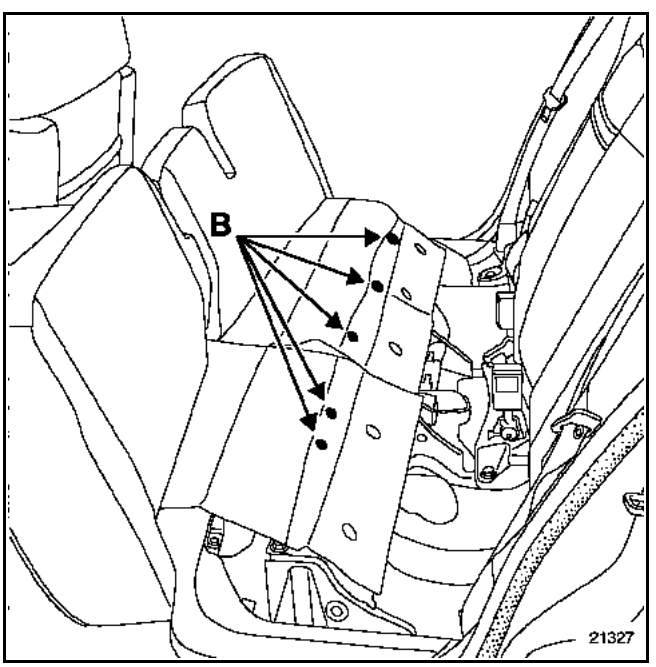

Remove the clips (B).

Partially release the lining.

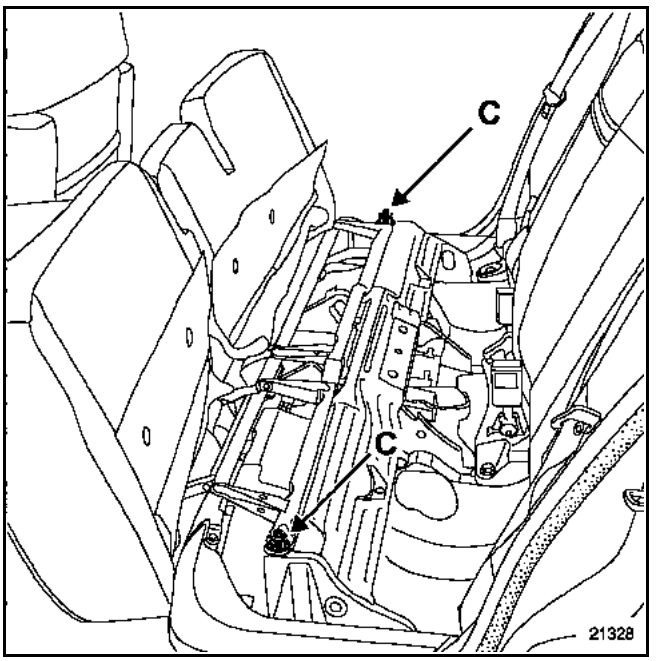

Remove the bolts (C) and release the bench seat cushion (**two operators**).

REFITTING (two people)

To refit, proceed in the reverse order of removal.

TIGHTENING TORQUE (in N.m)	
Cushion securing nuts	**44**

GETtheMANUALS.org

REMOVAL

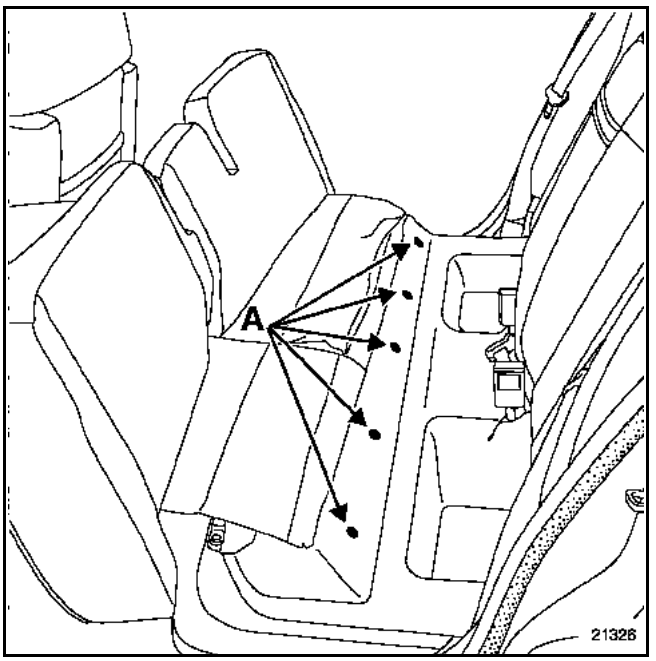

Remove:
– the clips (A) and release the lining;

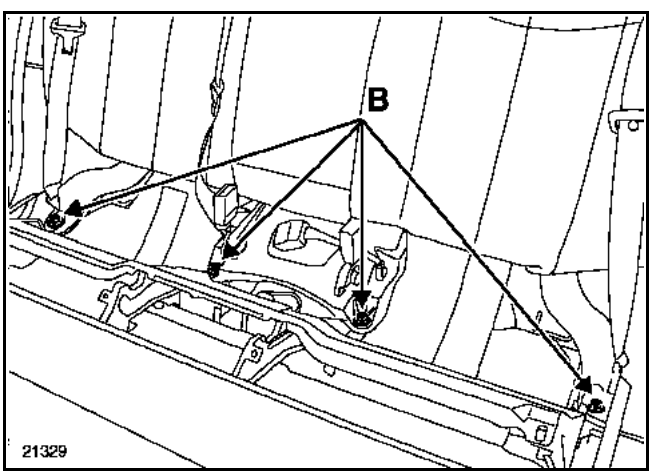

– the mountings (B).

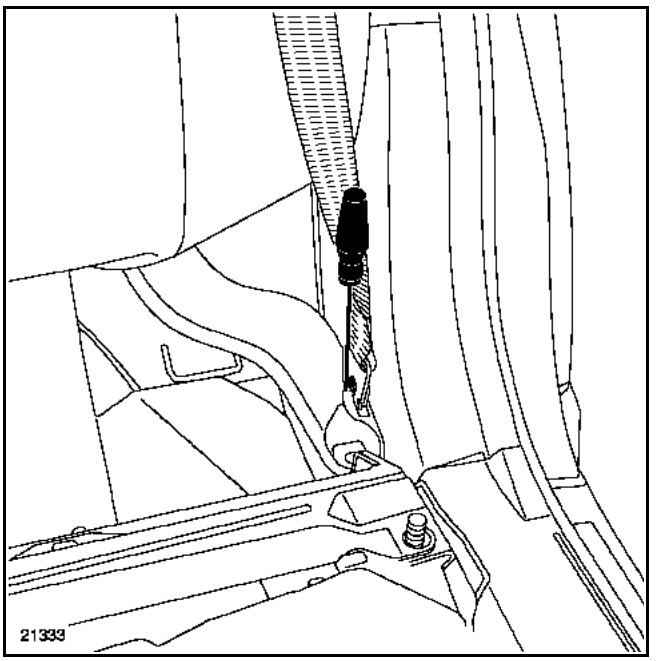

Using a small screwdriver, unclip the seat belts.

Tilt the seatbacks and extricate the boot carpet.

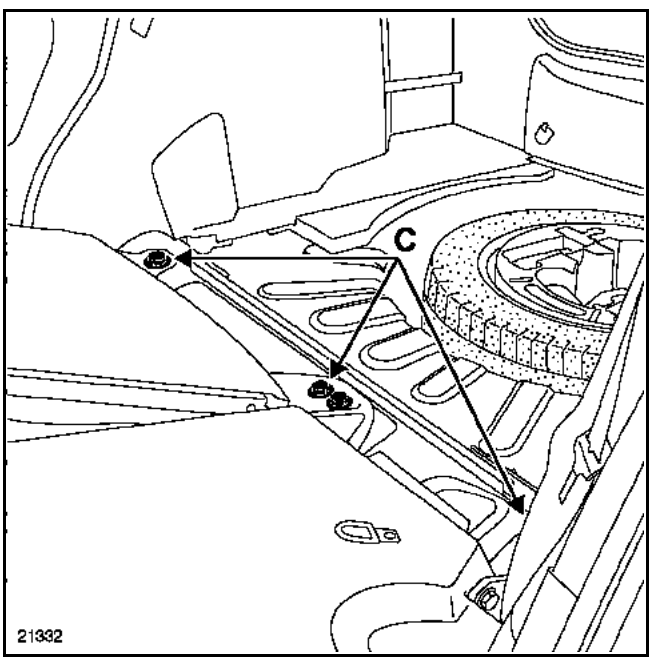

Remove the mountings (C) and withdraw the seatback (**two operators**).

REFITTING (two people)

TIGHTENING TORQUE (in N.m)	
Seatback mountings	**44**

GETtheMANUALS.org

REMOVAL

Remove:
– the seat (**section 75A.A**) (**respect the safety guidelines**),
– the lower trim (**section 79A.A**).

Unclip:
– the headrest covers,
– seatbelt cover (A),

– the upper section of the flap.

Release this upwards.

Release:
– the two lower straps,
– the cover retainer profile.

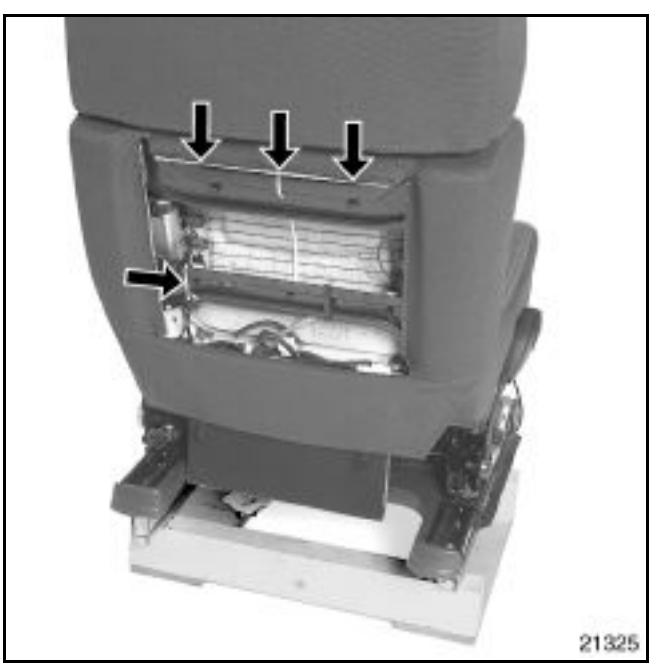

Unclip the three upper clips.

Release the hook.

GETtheMANUALS.org

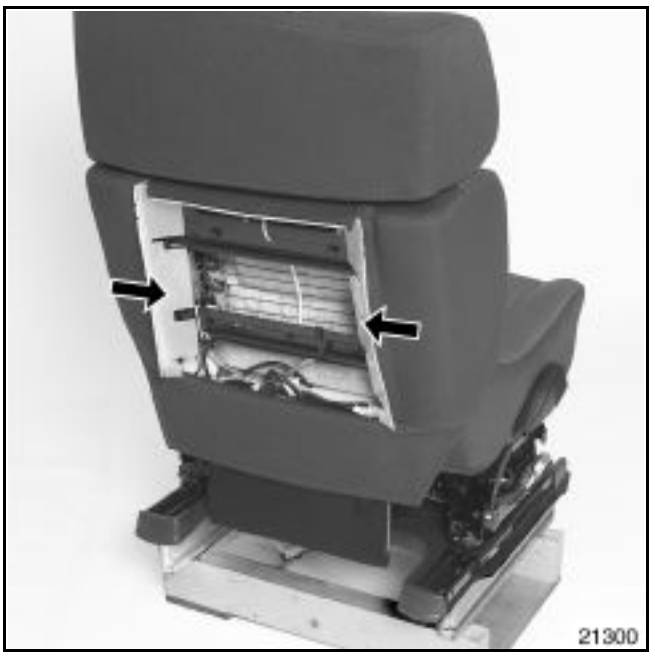

Release the two side bars at the rear of the frame.

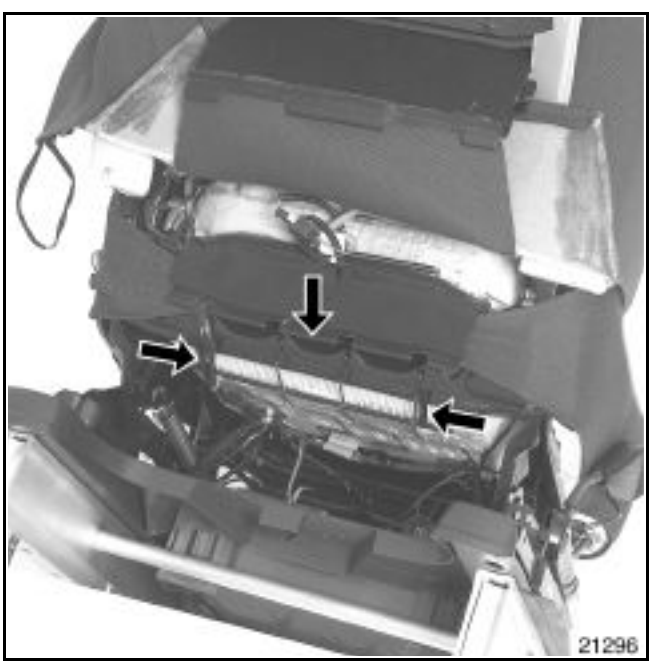

Release:
– the front retainer profile,
– the two lower straps.

Remove the bolt and the pretensioner connector.

Release this from the seat squab trim.

Unclip the trim by the air bag.

IMPORTANT: release the foam trim, keeping hold of the velcro strips.

GETtheMANUALS.org

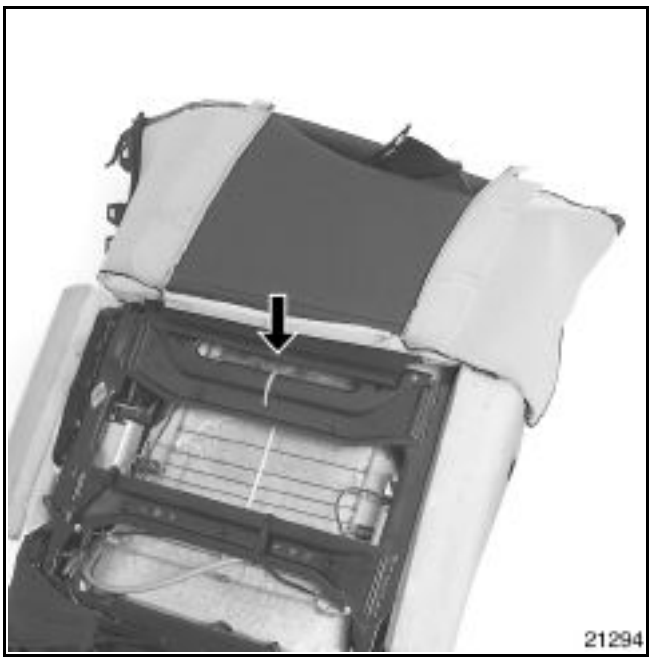

Release the profile and the two upper retainer straps.

Release the foam lining assembly from the upper seatback, taking care not to rip the lining around the headrest guides and seat belt retractor.

Release the foam from the lower seatback and the heating layer connector.

REFITTING

IMPORTANT: before refitting the seat trim, check that the velcro strips are securely attached to the lower seatback foam.

Position the lower seatback foam and connect the heating layer.

Turn the trim over and place it on the upper seatback foam, position the foam trim assembly on the frame making sure to thread the seat belt through its hole.

TIGHTENING TORQUE (in Nm)	
Seat belt pretensioner	**21**

GETtheMANUALS.org

REMOVAL

NOTE: to remove the seat squab trim, the seatback trim must be partially removed.

Remove:
– the seat (**section 75A.A**) (respect the safety guidelines),
– the lower trim (**section 79A.A**),
– the lower seatback trim (**section 77A.A**),
– the seatbelt pretensioner.

Release:
– the two lower straps,

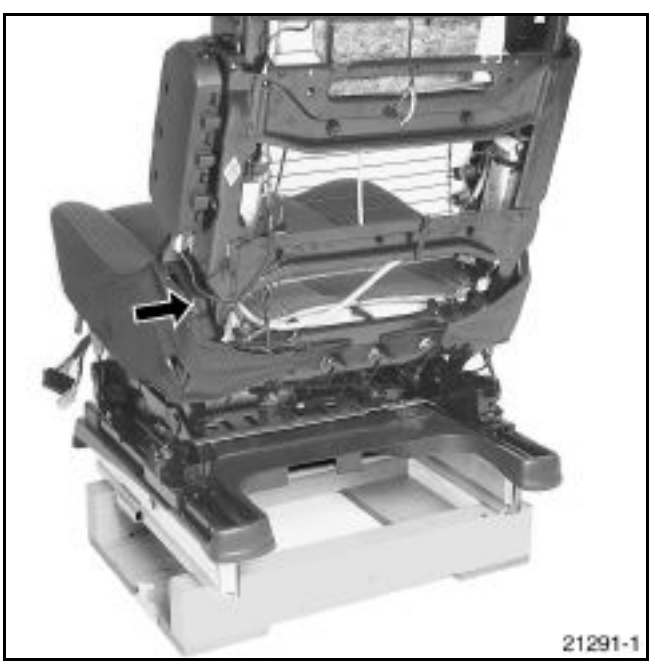

– the side mountings.

remove the upper straps.

Gently pull the lining away.

Release:
– the side mountings,
– the front lower mounting.

Disconnect the heating layer connector.

IMPORTANT: release the foam trim, keeping hold of the velcro strips.

GETtheMANUALS.org

REFITTING

IMPORTANT: before refitting the seat squab trim to the foam, check that the velcro strips are securely attached to the lower seatback foam.

Special notes for refitting the trim to the foam

1 Align the rear section of the trim with the edge of the foam.
2 Attach the velcro side strips (rear section).
3 Fit the trim at the front and side section (keeping hold of the rear section to pull the trim taut).
4 Attach the centre velcro strip.

TIGHTENING TORQUE (in Nm)	
Seat belt pretensioner	21

ADAPTING THE PARTS STORE PART TO REPLACE THE SEAT CUSHION FOAM ON A MANUALLY-ADJUSTING SEAT

When replacing the seat cushion foam of a manually-adjusted seat, trim the foam down following the prepared markings (see illustration above).

GETtheMANUALS.org

REMOVAL

Remove the entire seat squab (**section 76A.A**).

1/3 Seat squab trim

Remove the two clips and unclip the trim.

Unzip the two zip fasteners.

Separate the foam lining from the metal frame.

IMPORTANT: when removing the foam lining, hold the velcro strips.

NOTE: to remove the 2/3 seat squab follow the same procedure for the 1/3 seat squab.

GETtheMANUALS.org

REFITTING

Notes on refitting the trim onto the foam lining

1 Line up the rear section of the trim with the edge of the foam lining.
2 Fasten the velcro side strips (rear section).
3 Cover the front and side of the lining (holding the rear section in order to stretch the trim).
4 Fasten the central velcro strip.

NOTE: the zip fasteners can be closed using the **Car. 1558 tool, (see general notes in section 05B).**

Before removing the trim, check that the velcro strips are fastened securely.

Proceed in the reverse order to removal.

GETtheMANUALS.org

REMOVAL

NOTE: to remove the 2/3 seat squab follow the same procedure for the 1/3 seat squab.

To remove the seatback see (**section 76A.B**).

Partially open the 1/3 trim zip fastener.

Remove the two seatback mountings.

Separate the 1/3 seatback from the 2/3 seatback.

Remove:
– the lock cover,
– the seatback side mounting and support,
– the seatbelt mounting and catches,
– the lashing ring.

Remove the two rivets.

Remove the armrest.

Unclip the seatback unlocking button cover.

Remove the side strip mounting.

Undo the zip fastener.

Partially remove the trim.

Unclip the five clips on the retaining strip.

Unclip the head restraint guides (from the inside).

GETtheMANUALS.org

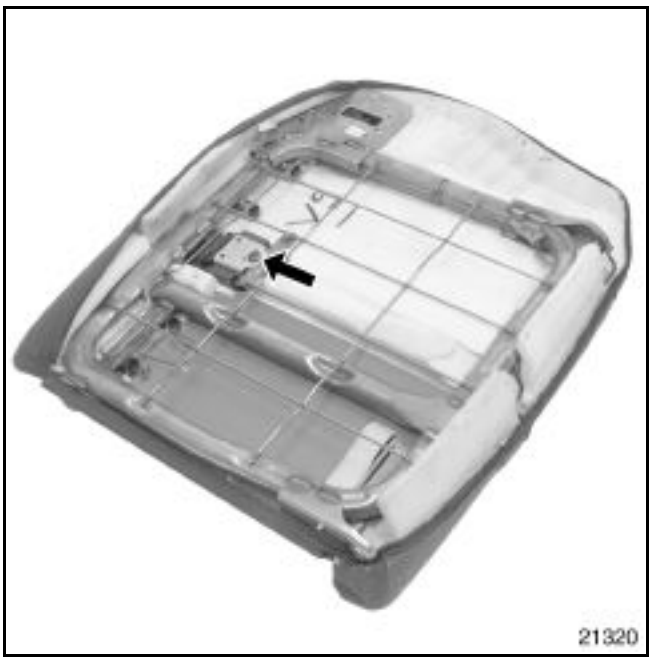

Remove the seatbelt inertia reel mounting.

Partially remove the inertia reel.

Unclip the seat belt cover (by pressing the two valve rockers on the interior of the seatback).

Remove the foam lining.

SPECIAL INSTRUCTIONS ON REFITTING

NOTE: the zip fasteners can be closed using the **(Car. 1558) tool, (see general notes in section 05B).**

IMPORTANT: close the zip fasteners before assembling the seatbacks.

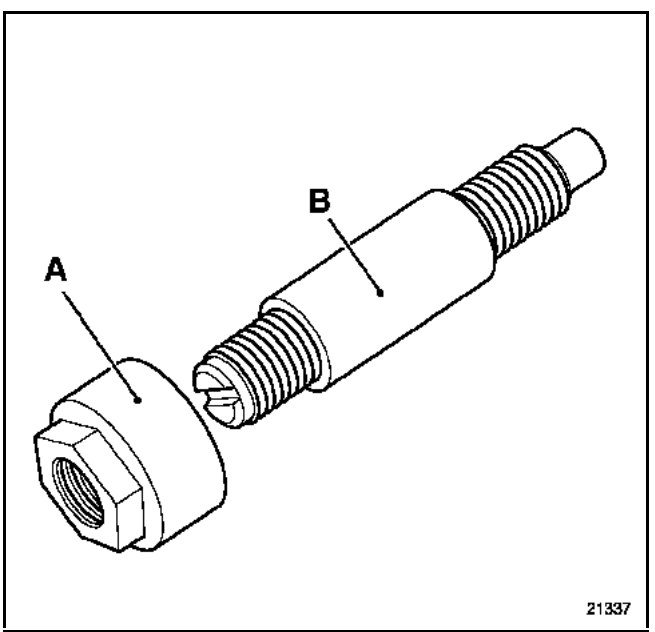

Before assembling the seatbacks, unscrew nut (A) from shaft (B).

Using a flat screwdriver, position shaft (B) on the metal frame and unscrew 2/3.

Assemble the seatbacks with the central mounting.

Replace the nut.

TIGHTENING TORQUES (in Nm)	▽
Seat belt inertia reel	**21**
Seat belt catches	**21**
Seatback mounting nut	**35**

GETtheMANUALS.org

REMOVAL

NOTE: you will need a set of clips to remove the lower trim.

Remove the whole seat (**section 75A.A**) (**follow safety guidelines**).

Remove the two trim mountings, unclip the rear section of the trim and release it towards the front of the vehicle.

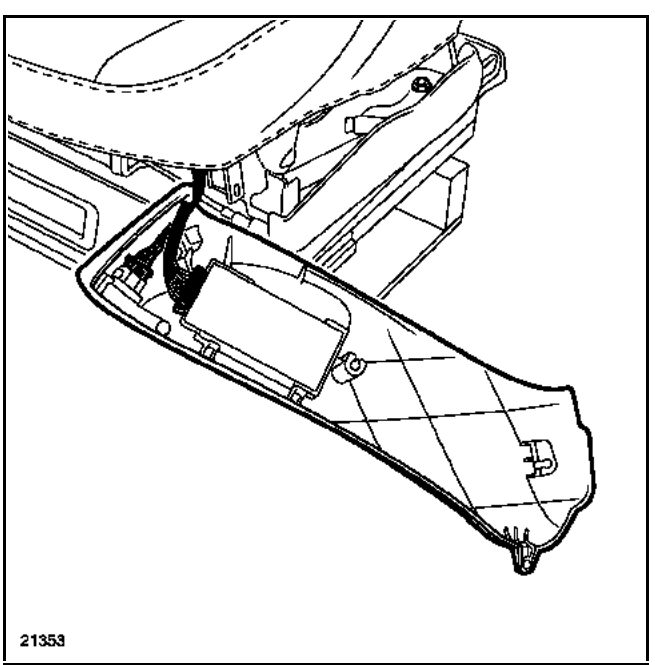

Release the two connectors and remove the trim.

Unclip the front section of the trim.

Release the trim towards the rear.

SPECIAL NOTE FOR MANUAL SEAT

Unclip the seat squab adjustment knob.

GETtheMANUALS.org

Remove the trim in the same way as for electric models.

Unclip the seatback adjustment motor control and remove or release the connector.

Partially release the seat squab trim.

IMPORTANT: it is essential to change the seat height adjustment mechanism when removing the pumping handle.

GETtheMANUALS.org

REMOVAL

Remove:
– the seatback (**section 76A**),
– the seatback trim (**section 78A.B**).

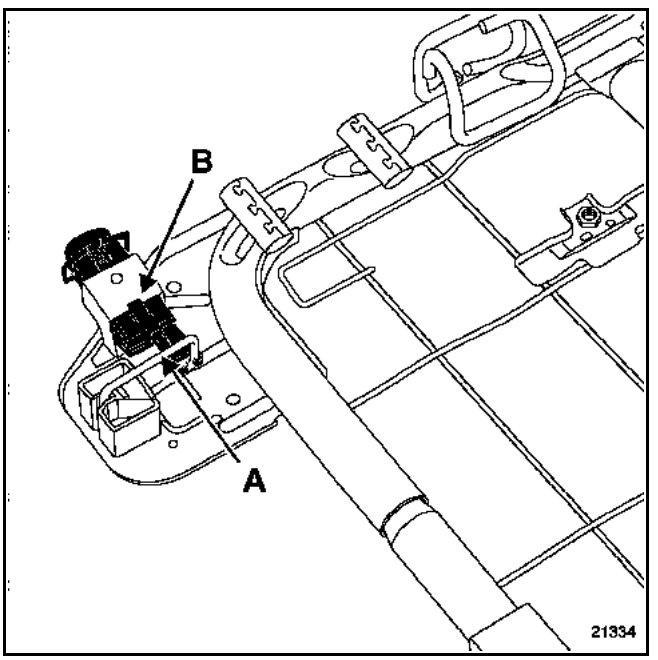

Press the unlock button.

Release:
– the locking link (A),
– the clips (B) and remove the push-button.

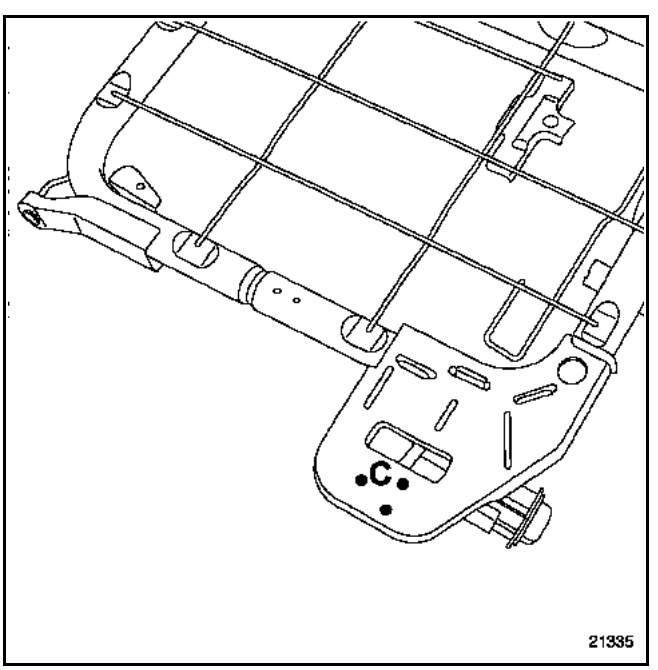

Remove the rivets (C) and the lock.

GETtheMANUALS.org

REMOVAL

Remove:
– the whole seat (**section 75A.A**) (follow the safety guidelines),
– the seatback trim (**section 77A.A**),
– the seat squab trim (**section 77A.B**),
– the runners (**section 75A.B**).

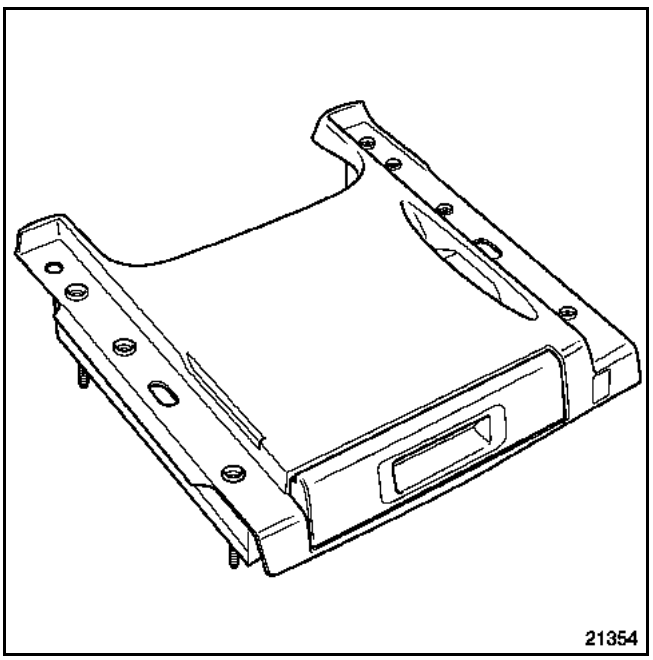

Release the storage compartment.

GETtheMANUALS.org

VEL SATIS

0 General Information

01E FAULT FINDING INTRODUCTION

BJ0F - BJ0G - BJ0J - BJ0K - BJ0V

77 11 311 202 **DECEMBER 2001** **EDITION ANGLAISE**

"The repair methods given by the manufacturer in this document are based on the technical specifications current when it was prepared.

The methods may be modified as a result of changes introduced by the manufacturer in the production of the various component units and accessories from which his vehicles are constructed."

All copyrights reserved by Renault.

Copying or translating, in part or in full, of this document or use of the service part reference numbering system is forbidden without the prior written authority of Renault.

© RENAULT 2001

GETtheMANUALS.org

General information

Contents

Page

01E FAULT FINDING INTRODUCTION

General method	01E-1
Functions diagnosed	01E-3
New functions	01E-6

GETtheMANUALS.org

VEHICLE DESCRIPTION

Vel Satis is a fully multiplexed vehicle (with a CAN network linking the majority of the computers).

This technology makes new functions such as the keyless vehicle, the electronic stability program, the cruise control with distance limiter, etc. possible

On the other hand, it involves **significant information exchange** between the various systems.

This means that:

- ***a computer or a function (1) may fail due to a fault in another computer (2).***
- ***a short circuit in the multiplex network could paralyse all the vehicle functions.***
- ***after a repair operation, you must ensure that the system (1) is no longer faulty.***

This section describes:
- **the overall fault finding method,**
- **the functions which are diagnosed,**
- **the main new features of the vehicle.**

GETtheMANUALS.org

NOTES	Once the vehicle has been selected, the tool will only allow you to access **the multiplex network fault finding**. **Once the network diagnostic is completed, you will have access to the fault finding functions for all the vehicle systems.** **ALWAYS REPAIR NETWORK FAULTS BEFORE DIAGNOSING THE COMPUTERS**

TIP	Perform an automatic test on all the systems before selecting a particular function. When you select a system, a help box presents the computers contributing to the function.

Checking faults	Certain computers (for example, injection computers) store parameters when a fault occurs. This allows you to recreate the fault conditions.

Checking correct operation	Check the statuses, parameters and **configurations** using the associated methods.

Certain operating parameters of a system come from other computers via the multiplex network.

For example: the vehicle speed is sent by the ABS and appears in the diagnostics for the injection computers and the variable power assisted steering.

This information appears in a different colour on the diagnostic tools.

Click on this data to run the fault finding for the computer producing it.

AFTER REPAIR	Switch off the ignition, and wait **30 seconds**. Switch on the ignition again and repeat an automatic test of all the computers to ensure that there is no longer a fault.

GETtheMANUALS.org

Fault finding	Warning: if you are unable to diagnose a computer, check the connection between **track 7** of the diagnostic socket and the corresponding diagnostic track in the computer. **Track 15 of the diagnostic socket is no longer used.** Also check the computer supply and conformity.
Parking aid	This is a system which emits an acoustic signal the frequency of which varies as the vehicle approaches an obstacle to its rear. The computer which carries out this function is not on the multiplex network.
Air bag and Pretensioners	Computer present on the multiplex network.
ABS	This function manages both traction control and the electronic stability program (ESP) This computer is present on the multiplex network.
Immobiliser	This function is provided directly by the UCH, the electric steering column lock and the card reader. **Warning:** a fault in this system may make it **impossible to switch on the ignition. This function also includes keyless starting of the vehicle and writing to the RENAULT Card.**
Passenger compartment connection unit	This is the UCH. Fault finding on this computer comprises several diagnostic functions (management of the doors, tyres, engine immobiliser, etc.). This function also includes fault finding on the **wipers and lighting.** This computer is also on the multiplex network.

GETtheMANUALS.org

Automatic transmission	This computer is present on the multiplex network.
Heater	This is a system providing additional heating. It is separate from the air conditioning system. The computer handling this operation is not on the multiplex network.
Climate control	On this vehicle, the air conditioning computer controls the compressor. This computer is present on the multiplex network.
Power assisted steering	This function is managed by the UCH.
Door management	This function is managed by the UCH. It also includes operation authorisation for the electric windows, the sunroof and storage of the driving position. It also handles locking the doors when the vehicle is moving, door locking/unlocking, and interior lighting.
LPG injection	This is handled by a dedicated computer connected to the multiplex network. Warning: there is also a petrol injection computer.

GETtheMANUALS.org

Xenon bulbs	The on-board beam correction computer is used to adjust the angle of the headlights as a function of variations in the vehicle height with respect to the front and rear axles. This computer is not on the multiplex network.
Diesel injection	This function manages the engine and the cruise control and speed limiter functions This computer is present on the multiplex network.
Petrol injection	This function manages the engine and the cruise control and speed limiter functions This computer is present on the multiplex network.
Tyres	This function is managed by the UCH. It involves management of the **tyre pressure monitor.**
Parking brake	There is no longer a handbrake. This function is electronic and manages application and release of the parking brake automatically.
Proximity control	A radar located at the front of the vehicle regulates the speed according to a reference speed and the speed of the vehicle in front.
Instrument panel	This function also controls the voice synthesiser.
WARNING	The driver's position function (seat position storage) is not diagnosed. The voice synthesiser computer is not diagnosed. However, the function is controlled by the instrument panel. The Navigation/Information system is not diagnosed but it does have a test mode which is described in the method. The electric window and sunroof functions are covered by a specific diagnostic method.

GETtheMANUALS.org

Reminder:	This section describes the main computers/systems used by the new functions.

FUNCTION	**Keyless vehicle**

Function to select on the diagnostic tool	**Immobiliser**

Computer responsible for the function	UCH (= Connection Unit) + Fuse and Relay Unit

Computer using the multiplex network

The UCH switches the ignition on and off, operates and turns off the starter motor, controls the locking/unlocking of the steering column, and together with the injection computer, controls immobilisation.
It performs all these operations using **information sent by other computers.**

Computer participating in the function	Petrol or diesel injection

Computer using the multiplex network

– manages the functioning of the engine,
– informs the UCH when diesel preheating has finished,
(the UCH does not authorise starting until preheating has finished),
– informs the UCH of the status of the engine,
(the UCH cuts out the starter when the engine is declared running)
– manages, with the UCH, the coded immobiliser.

Computer participating in the function	Automatic transmission

Computer using the multiplex network

This computer transmits the position of the gear lever.
(the UCH only authorises engine startup in Park or Neutral)

GETtheMANUALS.org

Computer participating in the function	Electric steering column lock. **Computer using the multiplex network**

Its fault finding is also performed by the tool's immobiliser function.

The UCH sends it the locking and unlocking commands via the multiplex network **and** via a dedicated link (supplied by the OFF position of the + contact relay).

The lock may refuse to lock itself, for example if it receives a non-zero vehicle speed or if an air bag problem is detected.

Computer participating in the function	Access card reader

This computer:
- acts as a switch for the card at the half-way and fully-inserted positions,
- carries out the RENAULT Card authentication functions,
- acts as a radiofrequency receiver/transmitter,
- recharges the hands-free RENAULT Card,
- writes the vehicle data to the RENAULT Card,
- locks the card when the engine is running.

For all these actions, the reader obeys the requests made by the UCH.
They communicate via two dedicated connections.

Computer participating in the function	ABS

This computer sends the vehicle speed to the UCH to prevent the engine being shut down while the vehicle is moving
(a short press on the engine stop/start button does not stop the engine when the vehicle is in motion).

GETtheMANUALS.org

FUNCTION	**The Tyre Pressure Monitor**

Function to select on the diagnostic tool	**Tyres**

Computer responsible for the function	Tyre pressure monitoring computer.	**Computer using the multiplex network**

It stores the identification numbers of the valves and their positions on the vehicle, and receives the information sent by the radio receiver.
Warning: there is a receiver for the valves (underneath the vehicle body) and a receiver in the card reader for RENAULT Cards.

Computer participating in the function	UCH	**Computer using the multiplex network**

It informs the instrument panel of the presence of the tyre pressure monitor function.
Fault finding for this UCH function is included in the tyres section.

Computer participating in the function	Instrument panel.	**Computer using the multiplex network**

This displays the pressure of each tyre, among other statuses.

GETtheMANUALS.org

FUNCTION	**Electronic stability program**

Function to select on the diagnostic tool	**ABS, traction control and electronic stability program**

Computer responsible for the function	ABS — **Computer using the multiplex network**

It measures vehicle performance and controls braking and engine torque to correct skidding.

Computer participating in the function	Petrol or diesel injection — **Computer using the multiplex network**

It measures engine torque and sends it to the ABS.
It processes the torque values received from the ABS.

GETtheMANUALS.org

FUNCTION	**The automatic parking brake**

Function to select on the diagnostic tool	**Parking brake**

Computer responsible for the function	Automatic parking brake	**Computer using the multiplex network**

This computer applies and releases the brake according to the position of the driver's control, the incline, the status of the engine, etc.

Computer participating in the function	Petrol or diesel injection	**Computer using the multiplex network**

The injection sends the engine torque.

Computer participating in the function	Automatic transmission or UCH.	**Computer using the multiplex network**

These two computers send the gear engaged signal.

GETtheMANUALS.org

FUNCTION	**Cruise control and distance regulation**

Function to select on the diagnostic tool	**Proximity control**

Computer responsible for the function	Radar — **Computer using the multiplex network**

It measures the speed of the obstacle and adapts the vehicle speed according to the user's instructions.

Computer participating in the function	Petrol or diesel injection — **Computer using the multiplex network**

The injection:
– measures engine torque and sends it to the radar,
– processes the torque values received from the radar,
– also sends the status of the speed regulation controls.
It should be remembered that if the distance regulation function is carried out by the radar, the injection will still carry out the cruise control function.

Computer participating in the function	ABS — **Computer using the multiplex network**

The ABS:
– measures the speed of the vehicle and sends it to the radar,
– processes the braking instructions from the radar.

GETtheMANUALS.org

FUNCTION	**On-Board Diagnostics (emission control)**

Function to select on the diagnostic tool	**Petrol or diesel injection**

Computer responsible for the function	Injection	**Computer using the multiplex network**

The On-Board Diagnostic function is shared by the injection computer and the automatic gearbox computer.
The injection computer decides the emission control diagnostic to be sent to the diagnostic tool.
The emission control faults associated with the automatic gearbox are also accessible to the injection computer.

Computer participating in the function	Automatic gearbox	**Computer using the multiplex network**

This computer can request illumination of the emission control warning light.

GETtheMANUALS.org

FUNCTION	**Air conditioning**

Function to select on the diagnostic tool	**Climate control**

Computer responsible for the function	Climate control	**Computer using the multiplex network**

Climate control:
– controls the climate control compressor,
– processes all the sensor outputs except the engine coolant temperature and the external air temperature.

Computer participating in the function	Petrol or diesel injection	**Computer using the multiplex network**

The injection:
– authorises or inhibits the climate control,
– processes requests for set-point values for the idle speed and startup of the engine cooling fan.

Computer participating in the function	UCH	**Computer using the multiplex network**

The UCH sends the exterior air temperature received
from the radio display or the Central Communication Unit to the air conditioning unit.

GETtheMANUALS.org

FUNCTION	**The voice synthesiser**

Function to select on the diagnostic tool	**Not diagnosed**

Computer responsible for the function	Voice synthesiser	**Computer using the multiplex network**

The voice synthesiser:
– sends messages in the language and at the volume requested via the **instrument panel**,
– mutes the radio while a message is being spoken.
There is no diagnosis of this computer. But the instrument panel must be diagnosed.
Customer complaints are dealt with in the instrument panel section.

Computer participating in the function	Instrument panel	**Computer using the multiplex network**

The instrument panel:
– receives and processes all the fault messages (mainly via the multiplex network).
– processes driver commands (Mute and Repeat).
– sends message requests to the voice synthesiser.
This computer is diagnosed.

GETtheMANUALS.org

FUNCTION	**Storage of the driving position: driver's seat and rear-view mirrors**

Function to select on the diagnostic tool	**Not diagnosed**

Computer responsible for the function	Driver's seat computer for the seat, Front window riser computers for the door mirrors.

The **driver's seat position memory computer** is more or less the same as that in earlier models.
The only difference is that buttons 1, 2 and 3 are no longer present, but the UCH sends the RENAULT Card number via a dedicated link. A position can therefore be stored for each RENAULT Card for the vehicle.

The **front electric window computers** also manage storage of the rear-view mirror positions.

Warning: there are therefore three types of electric window: the simple electric window, the one-touch anti-pinch window **and** the one touch, anti-pinch window which stores the position of the door mirrors.

The two electric window computers in question communicate with each other via a dedicated multiplexed network, which carries the commands for the door mirrors and the electric windows on the driver's door, the RENAULT Card number etc.

Computer participating in the function	The UCH

Computer using the multiplex network

This computer processes the door switches and the switch-on commands.
It is therefore this computer which authorises the operation of the one-touch and the stored position window-risers (via two dedicated links).

It also sends the number of the customer's RENAULT Card.

Fault finding for these links is implemented in the "Management of opening elements and access" function.

GETtheMANUALS.org

VEL SATIS

2 Transmission

23A AUTOMATIC GEARBOX

BJ0E - BJ0J - BJ0K - BJ0P - BJ0V - BJ0M

77 11 311 242 **Edition 2 - DECEMBER 2001** **EDITION ANGLAISE**

"The repair methods given by the manufacturer in this document are based on the technical specifications current when it was prepared.

The methods may be modified as a result of changes introduced by the manufacturer in the production of the various component units and accessories from which his vehicles are constructed".

All copyrights reserved by RENAULT.

Copying or translating, in part or in full, of this document or use of the service part reference numbering system is forbidden without the prior written authority of RENAULT.

© RENAULT 2001

GETtheMANUALS.org

Transmission

Contents

	Page
23A AUTOMATIC GEARBOX	
Introduction	23A-1
Interpretation of faults	23A-2
Conformity check	23A-37
Interpretation of states	23A-40
Interpretation of parameters	23A-43
Help	23A-44
Customer complaints	23A-45
Fault finding chart	23A-47

AUTOMATIC GEARBOX
Fault finding - Introduction

GETtheMANUALS.org

This document presents the fault finding strategy applicable to all SU1 2001 AUTOMATIC GEARBOX computers - with VDIAG 08 fitted to Vel Satis.

In order to implement fault finding on this system, it is essential to have the following items available:
- **the wiring diagram of the function for the vehicle concerned,**
- **the tools listed in the Special tooling required section.**

GENERAL APPROACH TO FAULT FINDING:

- **Use one of the diagnostic tools to identify the system fitted to the vehicle (to read the computer group, the program number, the Vdiag, etc.).**

- **Locate the Fault finding documents corresponding to the system identified.**

- **Include information contained in the introductory sections.**

- **Read the faults stored in the computer memory and use the Fault interpretation section of the documents. REMINDER: each fault is interpreted for a given type of storage (fault present, fault stored, fault present or stored). The specified checks for dealing with each fault are therefore only to be performed if the fault declared by the diagnostic tool can be identified in the document by its type. The way in which the fault is stored should be considered when using the diagnostic tool after switching the ignition off and on again. If a fault is interpreted when it is declared as stored, the application conditions for the fault finding procedure appear in the Notes box. When these conditions are not satisfied, use the fault finding procedure to check the circuit of the faulty part, since the fault is no longer present on the vehicle. Perform the same operation when a fault is declared as stored by the diagnostic tool but is only interpreted in the documentation as a present fault.**

- **Carry out the conformity check (appearance of possible faults not yet identified by the system's self diagnosis procedure) and implement the relevant fault finding strategies according to the results.**

- **Confirm repair (disappearance of the fault reported by the customer).**

- **Use the fault finding strategies for the Customer complaint if the problem persists.**

Special tooling required for operations on the SU1 2001 automatic gearbox:

- Diagnostic tools (except XR25),
- Multimeter.

GETtheMANUALS.org

DF002 PRESENT	COMPUTER 1.DEF : Internal electronic fault.

NOTES	**Special notes:** make sure that the fault does not appear after the computer has been reprogrammed. If this occurs, carry out the procedure again very carefully.

Replace the automatic gearbox computer if the fault appears during normal use or persists after several reprogramming attempts.

AFTER REPAIR	Clear the computer memories and switch off the ignition. Now road test the vehicle to initialise the auto-adaptatives. Check again using the diagnostic tool.

GETtheMANUALS.org

DF019 STORED	GEARBOX OUTPUT SPEED SENSOR CIRCUIT 1.DEF : Signal absent

NOTES	**Conditions for applying the fault finding procedure to stored faults:** The fault is declared present after: – the computer fault memory has been cleared, – the ignition has been switched off and on again, – the engine has been started for **3 minutes**. **Special notes:** road test the vehicle in Drive or Reverse if the speed is not resting at zero and faults **DF019** and **DF057** are present at the same time; refer to the information on ABS ECU (speed inconsistency with ABS).

1.DEF

Check the connections on the computer and the speed sensor **2-track** connector.
Ensure the continuity, insulation and absence of interference resistance between:

Computer connector track 22 → **Track 2 of the speed sensor connector**

Computer connector track 37 → **Track 1 of the speed sensor connector**

If the fault persists after these checks, replace the vehicle speed sensor.

AFTER REPAIR	Clear the computer memories, switch off the ignition, then carry out a road test. Check again using the diagnostic tool.

GETtheMANUALS.org

DF023 STORED	GEARBOX OIL TEMPERATURE SENSOR CIRCUIT 1.DEF : Consistency CC.0 : Short circuit to earth CO.1 : Open or short circuit to + 12 V

NOTES	**Conditions for applying the fault finding procedure to stored faults:** The fault is declared present after: – the computer fault memory has been cleared, – the ignition has been switched off and on again, – the engine has been started and left running for **15 minutes**.

CC.O	***NOTES***	None.

Check the connections on the computer and the connector.
Ensure **the continuity and insulation** from earth and **+ 12 V** of the connections between:

Computer connector track 10 → **Track 1 of the 8-track gearbox connector**
Computer connector track 24 → **Track 5 of the 8-track gearbox connector**

Replace the wiring if necessary.

AFTER REPAIR	Clear the computer memories, switch off the ignition, then carry out a road test. Check again using the diagnostic tool.

GETtheMANUALS.org

DF023 **CONTINUED 1**	

CO.1	***NOTES***	The value **80 ˚C** given by **PR004** is a safety value and not representative of the sensor signal when the fault is present.

Check the connections on the computer and the connector.
Ensure **the continuity and insulation** from earth and **+ 12 V** of the connections between:

Computer connector track 10 → **Track 1 of the 8-track gearbox connector**
Computer connector track 24 → **Track 5 of the 8-track gearbox connector**

Replace the wiring if necessary.

Switch off the ignition, disconnect the **8-track** connector on the automatic gearbox and measure the oil temperature sensor resistance between **tracks 1 and 5** on the sensor side.

If the resistance measured is not approximately:

- **111 ± 6 Ω at 145°C**
- **247 ± 16 Ω at 110°C**
- **6.445 ± 0.645 KΩ at 10°C**
- **44 ± 6 KΩ at - 30°C**

Replace the gearbox oil temperature sensor.

If the sensor resistance is correct, repair or replace the wiring concerned.

AFTER REPAIR	Clear the computer memories, switch off the ignition, then carry out a road test. Check again using the diagnostic tool.

GETtheMANUALS.org

DF023 **CONTINUED 2**	

1.DEF	***NOTES***	The value **80˚C** given by **PR004** is a safety value. Do not take this into account when estimating the oil temperature.

Switch off the ignition, disconnect the **8-track** connector on the automatic gearbox and measure the oil temperature sensor resistance between **tracks 1 and 5** on the sensor side.

If the resistance measured is not approximately:

- **111 ± 6 Ω at 145°C**
- **247 ± 16 Ω at 110°C**
- **6.445 ± 0.645 KΩ at 10°C**
- **44 ± 6 KΩ at - 30°C**

Replace the gearbox oil temperature sensor.

AFTER REPAIR	Clear the computer memories, switch off the ignition, then carry out a road test. Check again using the diagnostic tool.

GETtheMANUALS.org

DF057 STORED	GEARBOX INPUT SPEED SENSOR CIRCUIT 1.DEF : Signal absent

NOTES	**Conditions for applying the fault finding procedure to stored faults:** The fault is declared present after: – the computer fault memory has been cleared, – the ignition has been switched off and on again, – the engine has been started for **1 minute** in Neutral.
	Special notes: road test the vehicle in Drive or Reverse if the speed is not resting at zero and faults **DF019** and **DF057** are present at the same time; refer to the information on ABS ECU (speed inconsistency with ABS).

1.DEF

Check the connections on the computer and the speed sensor **2-track** connector.
Ensure the insulation, continuity and absence of interference resistance between:

Computer connector track 9 → **Track 2 of the speed sensor connector**
Computer connector track 23 → **Track 1 of the speed sensor connector**

If the fault persists after these checks, replace the vehicle speed sensor.

AFTER REPAIR	Clear the computer memories, switch off the ignition, then carry out a road test. Check again using the diagnostic tool.

GETtheMANUALS.org

DF084 **STORED**	MULTIPLEX NETWORK 1.DEF : Carry out the multiplex network fault finding procedure

NOTES	**Conditions for applying the fault finding procedure to stored faults:** The fault is declared present after the engine is started.

Apply the fault finding procedure for the multiplex network.

If the fault persists, replace the computer.

AFTER REPAIR	Clear the computer memories, switch off the ignition, then carry out a road test. Check again using the diagnostic tool.

GETtheMANUALS.org

DF085 STORED	EVS1 SEQUENCE SOLENOID VALVE CIRCUIT CC.0 : Short circuit to earth CO.1 : Open circuit or short circuit to + 12 V

NOTES	**Conditions for applying the fault finding procedure to stored faults:** The fault is declared present after: – the computer fault memory has been cleared, – the ignition has been switched off and on again, – the engine has been started and running for **3 minutes** in Drive (all the gears must be engaged).

CO.1	***NOTES***	None

Switch off the ignition, disconnect the **8-track** connector under the automatic gearbox and **measure the resistance** of the winding of sequence solenoid valve No.1 between **earth** and **track 3** on the solenoid valve side.

If the resistance measured is not approximately **14 ± 2 Ω at 20°C**, remove the gearbox sump and take the same measurement directly from the solenoid valve. If the resistance is incorrect, replace the solenoid valve. If the resistance is correct, repair or replace the wiring in question.

Check the **continuity** of the connection between **track 2** of the computer connector and **track 3** of the **8-track** connector on the wiring harness side.

Check the **insulation** from **12 volts** of the connection between **tracks 29 and 30** of the computer connector and **track 3** of the **8-track** connector on the wiring harness side.

Repair or replace the automatic gearbox wiring concerned if a fault occurs.

Check the **continuity between earth** and **track 1** of the computer connector.

Check the connections on the automatic gearbox computer and the **8-track** connector.
Carry out the required operations.

If the fault persists after these tests, replace the S1 solenoid valve.

AFTER REPAIR	Clear the computer memory, switch off the ignition, then carry out a road test. Finish the operation by checking with the diagnostic tool. Use the actuator sequential command in the **SCENARIO** menu.

GETtheMANUALS.org

DF085 **CONTINUED**	

CC.0	***NOTES***	**Special notes:** None.

Switch off the ignition, disconnect the **8-track** connector under the automatic gearbox and **measure the resistance** of the winding of sequence solenoid valve No.1 between **the earth** and **track 3** on the solenoid valve side.

If the resistance measured is not approximately **14 ± 2 Ω at 20°C**, remove the gearbox sump and take the same measurement directly from the solenoid valve. If the resistance is incorrect, replace the solenoid valve. If the resistance is correct, repair or replace the wiring in question.

Check the **insulation** from earth of the connection between **track 2** of the computer connector and **track 3** of the **8-track** connector on the wiring harness side. Repair or replace the automatic gearbox wiring concerned if a fault occurs.

Check the connections on the automatic gearbox computer and the **8-track** connector.
Carry out the required operations.

If the fault persists after these tests, replace the S1 solenoid valve.

AFTER REPAIR	Clear the computer memory, switch off the ignition, then carry out a road test. Finish the operation by checking with the diagnostic tool. Use the actuator sequential command in the **SCENARIO** menu.

GETtheMANUALS.org

DF086 STORED	EVS2 SEQUENCE SOLENOID VALVE CIRCUIT CC.0 : Short circuit to earth CO.1 : Open circuit or short circuit to + 12 V

NOTES	**Conditions for applying the fault finding procedure to stored faults:** The fault is declared present after: – the computer fault memory has been cleared, – the ignition has been switched off and on again, – the engine has been started and running for **3 minutes** in Drive (all the gears must be engaged).

CO.1	***NOTES***	None

Switch off the ignition, disconnect the **6-track** connector under the automatic gearbox and **measure the resistance** of the winding of sequence solenoid valve No.2 between **the earth** and **track 3** on the solenoid valve side.

If the resistance measured is not approximately **13 ± 2 Ω at 20°C**, remove the gearbox sump and take the same measurement directly from the solenoid valve. If the resistance is incorrect, replace the solenoid valve.

If the resistance is correct, repair or replace the wiring in question.

Check the **continuity** of the connection between **track 16** of the computer connector and **track 3** of the **6-track** connector on the wiring harness side.

Check the **insulation** from **12 volts** of the connection between **tracks 29 and 30** of the computer connector and **track 3** of the **6-track** connector on the wiring harness side.

Repair or replace the automatic gearbox wiring concerned if a fault occurs.

Check for **the continuity** between **the earth** and **track 1** of the computer connector.

Check the connections on the automatic gearbox computer and the **6-track** connector.
Carry out the required operations.

If the fault persists after these tests, replace the S2 solenoid valve.

AFTER REPAIR	Clear the computer memory, switch off the ignition, then carry out a road test. Finish the operation by checking with the diagnostic tool. Use the actuator sequential command in the **SCENARIO** menu.

GETtheMANUALS.org

DF086 **CONTINUED**	

CC.0	***NOTES***	**Special notes:** None.

Switch off the ignition, disconnect the **6-track** connector under the automatic gearbox and **measure the resistance** of the winding of sequence solenoid valve No.2 between **the earth** and **track 3** on the solenoid valve side.

If the resistance measured is not approximately **13 ± 2 Ω at 20°C**, remove the gearbox sump and take the same measurement directly from the solenoid valve. If the resistance is incorrect, replace the solenoid valve. If the resistance is correct, repair or replace the wiring in question.

Check the **insulation** from earth of the connection between **track 16** of the computer connector and **track 3** of the **6-track** connector on the wiring harness side. Repair or replace the automatic gearbox wiring concerned if a fault occurs.

Check the connections on the automatic gearbox computer and the **6-track** connector.
Carry out the required operations.

If the fault persists after these tests, replace the S2 solenoid valve.

AFTER REPAIR	Clear the computer memory, switch off the ignition, then carry out a road test. Finish the operation by checking with the diagnostic tool. Use the actuator sequential command in the **SCENARIO** menu.

GETtheMANUALS.org

DF087 STORED	EVS3 SEQUENCE SOLENOID VALVE CIRCUIT CC.0 : Short circuit to earth CO.1 : Open circuit or short circuit to + 12 V

NOTES	**Conditions for applying the fault finding procedure to stored faults:** The fault is declared present after: – the computer fault memory has been cleared, – the ignition has been switched off and on again, – the engine has been started and running for **3 minutes** in Drive (all the gears must be engaged).

CO.1	***NOTES***	None

Switch off the ignition, disconnect the **6-track** connector under the automatic gearbox and **measure the resistance** of the winding of sequence solenoid valve No.3 between **the earth** and **track 6** on the solenoid valve side.

If the resistance measured is not approximately **13 ± 2 Ω at 20°C**, remove the gearbox sump and take the same measurement directly from the solenoid valve. If the resistance is incorrect, replace the solenoid valve.

If the resistance is correct, repair or replace the wiring in question.

Check the **continuity** of the connection between **track 31** of the computer connector and **track 6** of the **6-track** connector on the wiring harness side.

Check the **insulation** from **12 volts** of the connection between **tracks 29 and 30** of the computer connector and **track 6** of the **6-track** connector on the wiring harness side.

Repair or replace the automatic gearbox wiring concerned if a fault occurs.

Check for **continuity** between **the earth** and **track 1** of the computer connector.

Check the connections on the automatic gearbox computer and the **6-track** connector.
Carry out the required operations.

If the fault persists after these tests, replace the S3 solenoid valve.

AFTER REPAIR	Clear the computer memory, switch off the ignition, then carry out a road test. Finish the operation by checking with the diagnostic tool. Use the actuator sequential command in the **SCENARIO** menu.

GETtheMANUALS.org

DF087 **CONTINUED**	

CC.0	***NOTES***	**Special notes:** None.

Switch off the ignition, disconnect the **6-track** connector under the automatic gearbox and **measure the resistance** of the winding of sequence solenoid valve No.3 between **the earth** and **track 6** on the solenoid valve side.

If the resistance measured is not approximately **13 ± 2 Ω at 20°C**, remove the gearbox sump and take the same measurement directly from the solenoid valve. If the resistance is incorrect, replace the solenoid valve. If the resistance is correct, repair or replace the wiring in question.

Check the **insulation** from earth of the connection between **track 31** of the computer connector and **track 6** of the **6-track** connector on the wiring harness side. Repair or replace the automatic gearbox wiring concerned if a fault occurs.

Check the connections on the automatic gearbox computer and the **6-track** connector.
Carry out the required operations.

If the fault persists after these tests, replace the S3 solenoid valve.

AFTER REPAIR	Clear the computer memory, switch off the ignition, then carry out a road test. Finish the operation by checking with the diagnostic tool. Use the actuator sequential command in the **SCENARIO** menu.

GETtheMANUALS.org

DF088 STORED	EVS5 SEQUENCE SOLENOID VALVE CIRCUIT CC.0 : Short circuit to earth CO.1 : Open circuit or short circuit to + 12 V

NOTES	**Conditions for applying the fault finding procedure to stored faults:** The fault is declared present after: – the computer fault memory has been cleared, – the ignition has been switched off and on again, – the engine has been started and running for **3 minutes** in Drive (all the gears must be engaged).

CO.1	***NOTES***	None

Switch off the ignition, disconnect the **8-track** connector under the automatic gearbox and **measure the resistance** of the winding of sequence solenoid valve No.5 between **the earth** and **track 8** on the solenoid valve side.

If the resistance measured is not approximately **13 ± 2 Ω at 20°C**, remove the gearbox sump and take the same measurement directly from the solenoid valve. If the resistance is incorrect, replace the solenoid valve.

If the resistance is correct, repair or replace the wiring in question.

Check the **continuity** of the connection between **track 17** of the computer connector and **track 8** of the **8-track** connector on the wiring harness side.

Check the **insulation** from **12 volts** of the connection between **tracks 29 and 30** of the computer connector and **track 8** of the **8-track** connector on the wiring harness side.

Repair or replace the automatic gearbox wiring concerned if a fault occurs.

Check for **continuity** between **the earth** and **track 1** of the computer connector.

Check the connections on the automatic gearbox computer and the **8-track** connector.
Carry out the required operations.

If the fault persists after these tests, replace the S5 solenoid valve.

AFTER REPAIR	Clear the computer memory, switch off the ignition, then carry out a road test. Finish the operation by checking with the diagnostic tool. Use the actuator sequential command in the **SCENARIO** menu.

GETtheMANUALS.org

DF088 **CONTINUED**	

CC.0	***NOTES***	**Special notes:** None.

Switch off the ignition, disconnect the **8-track** connector under the automatic gearbox and **measure the resistance** of the winding of sequence solenoid valve No.5 between **the earth** and **track 8** on the solenoid valve side.

If the resistance measured is not approximately **13 ± 2 Ω at 20°C**, remove the gearbox sump and take the same measurement directly from the solenoid valve. If the resistance is incorrect, replace the solenoid valve. If the resistance is correct, repair or replace the wiring in question.

Check the insulation from earth of the connection between **track 17** of the computer connector and **track 8** of the **8-track** connector on the wiring harness side. Repair or replace the automatic gearbox wiring concerned if a fault occurs.

Check the connections on the automatic gearbox computer and the **8-track** connector.
Carry out the required operations.

If the fault persists after these tests, replace the S5 solenoid valve.

AFTER REPAIR	Clear the computer memory, switch off the ignition, then carry out a road test. Finish the operation by checking with the diagnostic tool. Use the actuator sequential command in the **SCENARIO** menu.

GETtheMANUALS.org

DF089 PRESENT	EVS4 SEQUENCE SOLENOID VALVE CIRCUIT CC.0 : Short circuit to earth CO.1 : Open circuit or short circuit to + 12 V

NOTES	**Conditions for applying the fault finding procedure to stored faults:** The fault is declared present after: – the computer fault memory has been cleared, – the ignition has been switched off and on again, – the engine has been started and running for **3 minutes** in Drive (all the gears must be engaged).

CO.1	***NOTES***	None

Switch off the ignition, disconnect the **8-track** connector under the automatic gearbox and **measure the resistance** of the winding of sequence solenoid valve No. 4 between **the earth** and **track 4** on the solenoid valve side.

If the resistance measured is not approximately **13 ± 2 Ω at 20°C**, remove the gearbox sump and take the same measurement directly from the solenoid valve. If the resistance is incorrect, replace the solenoid valve.

If the resistance is correct, repair or replace the wiring in question.

Check the **continuity** of the connection between **track 3** of the computer connector and **track 4** of the **8-track** connector on the wiring harness side.

Check the **insulation** from **12 volts** of the connection between **tracks 29 and 30** of the computer connector and **track 4** of the **8-track** connector on the wiring harness side.

Repair or replace the automatic gearbox wiring concerned if a fault occurs.

Check for **continuity** between **the earth** and **track 1** of the computer connector.

Check the connections on the automatic gearbox computer and the **8-track** connector.
Carry out the required operations.

If the fault persists after these tests, replace the S4 solenoid valve.

AFTER REPAIR	Clear the computer memory, switch off the ignition, then carry out a road test. Finish the operation by checking with the diagnostic tool. Use the actuator sequential command in the **SCENARIO** menu.

GETtheMANUALS.org

DF089 **CONTINUED**	

CC.0	***NOTES***	**Special notes:** None.

Switch off the ignition, disconnect the **8-track** connector under the automatic gearbox and **measure the resistance** of the winding of sequence solenoid valve No. 4 between **the earth** and **track 4** on the solenoid valve side.

If the resistance measured is not approximately **13 ± 2 Ω at 20°C**, remove the gearbox sump and take the same measurement directly from the solenoid valve. If the resistance is incorrect, replace the solenoid valve. If the resistance is correct, repair or replace the wiring in question.

Check the **insulation** from earth of the connection between **track 3** of the computer connector and **track 4** of the **8-track** connector on the wiring harness side. Repair or replace the automatic gearbox wiring concerned if a fault occurs.

Check the connections on the automatic gearbox computer and the **8-track** connector.
Carry out the required operations.

If the fault persists after these tests, replace the S4 solenoid valve.

AFTER REPAIR	Clear the computer memory, switch off the ignition, then carry out a road test. Finish the operation by checking with the diagnostic tool. Use the actuator sequential command in the **SCENARIO** menu.

GETtheMANUALS.org

DF090 STORED	CONVERTER LOCK-UP SOLENOID VALVE CIRCUIT CC.1 : Short circuit to +12 V CO.0 : Open circuit or short circuit to earth

NOTES	**Conditions for applying the fault finding procedure to stored faults:** The fault is declared present after: – the computer fault memory has been cleared, – the ignition has been switched off and on again, – the engine has been started for **1 minute** in Neutral.

CC.1	***NOTES***	None

Switch off the ignition, disconnect the **6-track** connector under the automatic gearbox and **measure the resistance** of the winding of the lock-up solenoid valve between **track 5** and **track 2** on the solenoid valve side. If the resistance measured is not approximately **5.5 ± 0.5 Ω at 20°C**, remove the gearbox sump and take the same measurement directly from the solenoid valve. If the resistance is incorrect, replace the 3 solenoid valves (LS, LT and lock-up). If the resistance is correct, repair or replace the wiring in question.

Ensure continuity of the connections between:

Computer connector track 6 ⟶ Track 5 of the hydraulic unit 6-track connector.
Computer connector track 18 ⟶ Track 2 of the hydraulic unit 6-track connector.

Also check the insulation between these connections.

Ensure the insulation from **12 V** of the connections between:

Computer connector track 6 ⟶ Track 5 of the hydraulic unit 6-track connector.
Computer connector track 18 ⟶ Track 2 of the hydraulic unit 6-track connector.

Repair or replace the automatic gearbox wiring concerned if a fault occurs.

Check the connections on the automatic gearbox computer and the **6-track** connector.
Carry out the required operations.

If the fault persists after these tests, replace the 3 solenoid valves (lock-up, LS, LT).

AFTER REPAIR	Clear the computer memory, switch off the ignition, then carry out a road test. Finish the operation by checking with the diagnostic tool. Use the actuator sequential command in the **SCENARIO** menu.

GETtheMANUALS.org

DF090 **CONTINUED**	

CO.0	***NOTES***	**Special notes:** None.

Switch off the ignition, disconnect the **6-track** connector under the automatic gearbox and **measure the resistance** of the winding of the lock-up solenoid valve between **track 5** and **track 2** on the solenoid valve side. If the resistance measured is not approximately **5.3 ± 0.3 Ω at 20°C**, remove the gearbox sump and perform the same measurement directly from the solenoid valve. If the resistance is incorrect, replace the 3 solenoid valves (LS, LT and lock-up). If the resistance is correct, repair or replace the wiring in question.

Ensure continuity of the connections between:

Computer connector track 6 → Track 5 of the hydraulic unit 6-track connector.
Computer connector track 18 → Track 2 of the hydraulic unit 6-track connector.

Also check the insulation between these connections.

Ensure the insulation against earth of the connections between:

Computer connector track 6 → Track 5 of the hydraulic unit 6-track connector.
Computer connector track 18 → Track 2 of the hydraulic unit 6-track connector.

Repair or replace the automatic gearbox wiring concerned if a fault occurs.

Check the connections on the automatic gearbox computer and the **6-track** connector.
Carry out the required operations.

If the fault persists after these tests, replace the 3 solenoid valves (lock-up, LS, LT).

AFTER REPAIR	Clear the computer memory, switch off the ignition, then carry out a road test. Finish the operation by checking with the diagnostic tool. Use the actuator sequential command in the **SCENARIO** menu.

GETtheMANUALS.org

DF091 STORED	LS PRESSURE REGULATION SOLENOID VALVE CIRCUIT CC.1 : Short circuit to +12 V CO.0 : Open circuit or short circuit to earth

NOTES	**Conditions for applying the fault finding procedure to stored faults:** The fault is declared present after: – the computer fault memory has been cleared, – the ignition has been switched off and on again, – the engine has been started for **1 minute** in Neutral.

CC.1	***NOTES***	None

Switch off the ignition, disconnect the **8-track** connector under the automatic gearbox and **measure the resistance** of the winding of the LS pressure regulation solenoid valve between **track 6** and **track 2** on the solenoid valve side. If the resistance measured is not approximately **5.5 ± 0.5 Ω at 20°C**, remove the gearbox sump and take the same measurement directly from the solenoid valve. If the resistance is incorrect, replace the 3 solenoid valves (LS, LT and lock-up). If the resistance is correct, repair or replace the wiring in question.

Ensure continuity of the connections between:

Computer connector track 5 ⟶ Track 2 of the hydraulic unit 8-track connector.
Computer connector track 20 ⟶ Track 6 of the hydraulic unit 8-track connector.

Also check the insulation between these connections.

Ensure the insulation from **12 V** of the connections between:

Computer connector track 5 ⟶ Track 2 of the hydraulic unit 8-track connector.
Computer connector track 20 ⟶ Track 6 of the hydraulic unit 8-track connector.

Repair or replace the automatic gearbox wiring concerned if a fault occurs.

Check the connections on the automatic gearbox computer and the **8-track** connector.
Carry out the required operations.

If the fault persists after these tests, replace the 3 solenoid valves (lock-up, LS, LT).

AFTER REPAIR	Clear the computer memory, switch off the ignition, then carry out a road test. Finish the operation by checking with the diagnostic tool. Use the actuator sequential command in the **SCENARIO** menu.

GETtheMANUALS.org

DF091 **CONTINUED**	

CO.0	***NOTES***	**Special notes:** None.

Switch off the ignition, disconnect the **8-track** connector under the automatic gearbox and **measure the resistance** of the winding of LS pressure regulation solenoid valve between **track 6** and **track 2** on the solenoid valve side. If the resistance measured is not approximately **5.3 ± 0.3 Ω at 20°C**, remove the gearbox sump and perform the same measurement directly from the solenoid valve. If the resistance is incorrect, replace the 3 solenoid valves (LS, LT and lock-up). If the resistance is correct, repair or replace the wiring in question.

Ensure continuity of the connections between:

Computer connector track 5 ⟶ Track 2 of the hydraulic unit 8-track connector.
Computer connector track 20 ⟶ Track 6 of the hydraulic unit 8-track connector.

Also check the insulation between these connections.

Ensure the insulation against earth of the connections between:

Computer connector track 5 ⟶ Track 2 of the hydraulic unit 8-track connector.
Computer connector track 20 ⟶ Track 6 of the hydraulic unit 8-track connector.

Repair or replace the automatic gearbox wiring concerned if a fault occurs.

Check the connections on the automatic gearbox computer and the **8-track** connector.
Carry out the required operations.

If the fault persists after these tests, replace the 3 solenoid valves (lock-up, LS, LT).

AFTER REPAIR	Clear the computer memory, switch off the ignition, then carry out a road test. Finish the operation by checking with the diagnostic tool. Use the actuator sequential command in the **SCENARIO** menu.

GETtheMANUALS.org

DF092 **STORED**	LT PRESSURE REGULATION SOLENOID VALVE CIRCUIT CC.1 : Short circuit to +12 V CO.0 : Open circuit or short circuit to earth

NOTES	**Conditions for applying the fault finding procedure to stored faults:** The fault is declared present after: – the computer fault memory has been cleared, – the ignition has been switched off and on again, – the engine has been started for **1 minute** in Neutral.

CC.1	***NOTES***	None

Switch off the ignition, disconnect the **6-track** connector under the automatic gearbox and **measure the resistance** of the winding of the LT pressure regulation solenoid valve between **track 4** and **track 1** on the solenoid valve side. If the resistance measured is not approximately **5.5 ± 0.5 Ω at 20°C**, remove the gearbox sump and take the same measurement directly from the solenoid valve. If the resistance is incorrect, replace the 3 solenoid valves (LS, LT and lock-up). If the resistance is correct, repair or replace the wiring in question.

Ensure continuity of the connections between:

Computer connector track 4 ⟶ Track 1 of the hydraulic unit 6-track connector.
Computer connector track 19 ⟶ Track 4 of the hydraulic unit 6-track connector.

Also check the insulation between these connections.

Ensure the insulation from **12 V** of the connections between:

Computer connector track 4 ⟶ Track 1 of the hydraulic unit 6-track connector.
Computer connector track 19 ⟶ Track 4 of the hydraulic unit 6-track connector.

Repair or replace the automatic gearbox wiring concerned if a fault occurs.

Check the connections on the automatic gearbox computer and the **6-track** connector.
Carry out the required operations.

If the fault persists after these tests, replace the 3 solenoid valves (lock-up, LS, LT).

AFTER REPAIR	Clear the computer memory, switch off the ignition, then carry out a road test. Finish the operation by checking with the diagnostic tool. Use the actuator sequential command in the **SCENARIO** menu.

GETtheMANUALS.org

DF092 **CONTINUED**	

CO.0	***NOTES***	**Special notes:** None.

Switch off the ignition, disconnect the **6-track** connector under the automatic gearbox and **measure the resistance** of the winding of LT pressure regulation solenoid valve between **track 4** and **track 1** on the solenoid valve side. If the resistance measured is not approximately **5.3 ± 0.3 Ω at 20°C**, remove the gearbox sump and perform the same measurement directly from the solenoid valve. If the resistance is incorrect, replace the 3 solenoid valves (LS, LT and lock-up). If the resistance is correct, repair or replace the wiring in question.

Ensure continuity of the connections between:

Computer connector track 4 → Track 1 of the hydraulic unit 6-track connector.
Computer connector track 19 → Track 4 of the hydraulic unit 6-track connector.

Also check the insulation between these connections.

Ensure the insulation against earth of the connections between:

Computer connector track 4 → Track 1 of the hydraulic unit 6-track connector.
Computer connector track 19 → Track 4 of the hydraulic unit 6-track connector.

Repair or replace the automatic gearbox wiring concerned if a fault occurs.

Check the connections on the automatic gearbox computer and the **6-track** connector.
Carry out the required operations.

If the fault persists after these tests, replace the 3 solenoid valves (lock-up, LS, LT).

AFTER REPAIR	Clear the computer memory, switch off the ignition, then carry out a road test. Finish the operation by checking with the diagnostic tool. Use the actuator sequential command in the **SCENARIO** menu.

GETtheMANUALS.org

DF093 STORED	ONE-TOUCH MANUAL CONTROL CIRCUIT 1.DEF : Consistency

NOTES	**Conditions for applying the fault finding strategy to the stored fault: ET069** and **ET070** closed with the lever in P, R, N, D position. The fault is declared present after the engine has been started and running for **45 seconds**.

Check that states **ET069** and **ET070** with the lever in position P or R or N are not closed. What is the representative state of a fault?

ET069	Ensure that the one-touch switch **6-track** connector is connected correctly and in good condition. – Check for **insulation** between **tracks A3 and A2** on the one-touch switch side. If there is continuity, replace the one-touch manual control switch. – **Ensure that there is continuity and insulation** from the earth between **track 41** on the computer side and **track A3** of the computer connector. Repair or replace the wiring.

ET070	Ensure that the one-touch switch **6-track** connector is connected correctly and in good condition. – Check for **insulation** between **tracks B3 and A2** on the one-touch switch side. If there is continuity, replace the one-touch manual control switch. – **Ensure that there is continuity and insulation** from the earth **between track 26** on the computer side and **track B3** of the computer connector. Repair or replace the wiring.

AFTER REPAIR	Clear the computer memory, switch off the ignition, then carry out a road test. Complete the operation by testing with the diagnostic tool.

GETtheMANUALS.org

DF094 **STORED**	MULTIFUNCTION SWITCH CIRCUIT 1.DEF : Consistency

NOTES	**Conditions for applying the fault finding procedure to stored faults:** The fault is declared present after: – the computer fault memory has been cleared, – the ignition has been switched off and on again, – the engine has been started and running for **30 seconds**.
	Special notes: ignore the value indicating the lever position displayed on the instrument panel.

Check the fitting and setting of the multifunction switch on the automatic gearbox (consult the checking method).

Switch off the ignition and disconnect the **10-track** connector under the automatic gearbox.
Ensure that there is **an earth** on **track 10** of the multifunction switch connector.
For each locked position of the selector lever, check for the necessary continuity and insulation (see the table below).

Locked lever position	Assure continuity between	Assure insulation between
P	Tracks 6 and 7 / Track 10 Track 4 / Track 1	Tracks 5 and 8/Track 10 Track 2 / Track 3
D	Tracks 5 and 8/Track 10	Tracks 6 and 7 / Track 10 Track 4 / Track 1 Track 2 / Track 3
R	Tracks 6 and 5 / Track 10 Track 2 / Track 3	Tracks 3 and 7 / Track 10 Track 1 / Track 4
N	Tracks 5 and 7 / Track 10 Track 4 / Track 1	Tracks 8 and 6 / Track 10 Track 2 / Track 3

AFTER REPAIR	Clear the computer memory, switch off the ignition, then carry out a road test. Complete the operation by testing with the diagnostic tool.

GETtheMANUALS.org

DF094 **CONTINUED**	

If one of the insulation or continuity checks is not correct, replace the Multifunction switch (refer to the replacement method).

If the multifunction switch is not faulty, ensure continuity and insulation against earth on the following connections:

Computer connector track 35 → **Track 6 of the 10-track connector on the wiring harness side.**

Computer connector track 7 → **Track 5 of the 10-track connector on the wiring harness side.**

Computer connector track 21 → **Track 8 of the 10-track connector on the wiring harness side.**

Computer connector track 36 → **Track 7 of the 10-track connector on the wiring harness side.**

Also ensure insulation across all these connections.

AFTER REPAIR	Clear the computer memory, switch off the ignition, then carry out a road test. Complete the operation by testing with the diagnostic tool.

GETtheMANUALS.org

DF095 STORED	SELECTOR LEVER LOCK ELECTROMAGNET CIRCUIT CC.0 : Short circuit to earth CO.1 : Open circuit or short circuit to + 12 V

NOTES	**Conditions for applying the fault finding procedure to stored faults:** The fault is declared present after: – the computer fault memory has been cleared, – the ignition has been switched off and on again, – the engine has been started for **30 seconds** in Park.

CO.1	***NOTES***	None

Switch off the ignition and disconnect the **6-track** connector in the central console. Check the wiring and condition of the connections. Measure the **resistance** of the winding of the lever locking electromagnet between **tracks B1 and B2** of the electromagnet connector. If the resistance measured is not approximately **37 ± 2 Ω at 20°C**, replace the electromagnet.

Check for **continuity and insulation** from **+ 12 volts** between **tracks 32** of the computer connector and **track B2** of the control lever connector.

Check for the presence of **+ 12 V on track B1** of the control lever connector.

If the fault persists, replace the electromagnet assembly and any connection wires.

CC.0	***NOTES***	None

Switch off the ignition and disconnect the 6-track connector in the central console. Check the wiring and condition of the connections. Measure the **resistance** of the winding of the lever locking electromagnet between **tracks B1 and B2** of the electromagnet connector. If the resistance measured is not approximately **37 ± 2 Ω at 20°C**, replace the electromagnet.

Check for **continuity and insulation** from **earth** on the connection between **track 32** of the computer connector and **track B2** of the electromagnet connector.

Ensure that**+ After ignition feed** is present on **track B1** of the electromagnet connector.

If the fault persists, replace the electromagnet assembly and any connection wires.

AFTER REPAIR	Clear the computer memory, switch off the ignition, then carry out a road test. Complete the operation by testing with the diagnostic tool.

GETtheMANUALS.org

DF096 STORED	COMPUTER SUPPLY VOLTAGE 1.DEF : Supply voltage too low

NOTES	Check the battery charge.

Check the automatic gearbox fuses.

Check for **continuity** between **tracks 29** of the computer connector and the **fuse board** connector and **track 30** of the computer connector and the **fuse board** connector.

Check the earth wiring tightness on the vehicle and the supplies.

AFTER REPAIR	Clear the computer memory, switch off the ignition, then carry out a road test. Complete the operation by testing with the diagnostic tool.

GETtheMANUALS.org

DF097 STORED	CONVERTER LOCK-UP 1.DEF : Clutch slippage 2.DEF : Clutch judder

NOTES	**Processing priority in the event of stacked faults:** Deal with fault **DF090** Converter lock-up solenoid valve circuit first if it is present.
	Conditions for applying the fault finding procedure to stored faults: The fault is declared present after a road test.

Switch off the ignition, disconnect the **6-track** connector under the automatic gearbox and **measure the resistance** of the winding of the lock-up solenoid valve between **earth** and **track 2** on the solenoid valve side. If the resistance measured is not approximately **5.3 ± 0.3 Ω at 20°C**, remove the gearbox sump and perform the same measurement directly from the solenoid valve. If the resistance is incorrect, replace the 3 solenoid valves (LS, LT and lock-up). If the resistance is correct, repair or replace the wiring in question.

If the fault persists after these checks, replace the hydraulic timing.

AFTER REPAIR	Clear the computer memory, switch off the ignition, then carry out a road test. Complete the operation by testing with the diagnostic tool.

GETtheMANUALS.org

DF098 TO DF103 STORED	CONSISTENCY BETWEEN SPEED AND 1/2/3/4/5 GEARS 1.DEF : Consistency

NOTES	**Conditions for applying the fault finding procedure to stored faults:** The fault is declared present after a road test.

Hydraulic or mechanical fault. Replace the gearbox.

AFTER REPAIR	Clear the computer memory, switch off the ignition, then carry out a road test. Complete the operation by testing with the diagnostic tool.

GETtheMANUALS.org

DF104 **STORED**	EVS3 SEQUENCE SOLENOID VALVE 1.DEF : Hydraulic fault

NOTES	**Conditions for applying the fault finding procedure to stored faults:** The fault is declared present after a road test.

Hydraulic fault. Replace the hydraulic distributor.

AFTER REPAIR	Clear the computer memory, switch off the ignition, then carry out a road test. Complete the operation by testing with the diagnostic tool.

GETtheMANUALS.org

DF105 STORED	DECLUTCHING FUNCTION WHEN STOPPING 1.DEF : Clutch C1 engaged 2.DEF : Clutch C1 disengaged 3.DEF : Engine racing 4.DEF : Clutch slippage

NOTES	**Conditions for applying the fault finding procedure to stored faults:** The fault is declared present after: – the computer fault memory has been cleared, – the ignition has been switched off and on again, – the engine has been started and running for **30 seconds** in Drive with the brake pedal depressed.

Clutch C1 mechanical fault. Replace the gearbox.

AFTER REPAIR	Clear the computer memory, switch off the ignition, then carry out a road test. Complete the operation by testing with the diagnostic tool.

GETtheMANUALS.org

DF106 PRESENT	CHANGING GEAR

NOTES	**Conditions for applying the fault finding procedure to stored faults:** The fault is declared present after a road test.

Hydraulic or mechanical fault. Replace the gearbox.

AFTER REPAIR	Clear the computer memory, switch off the ignition, then carry out a road test. Complete the operation by testing with the diagnostic tool.

GETtheMANUALS.org

DF110 **STORED**	INJECTION MULTIPLEX TRANSMISSION SIGNAL 1.DEF : No injection transmission signals on multiplex network

NOTES	**Conditions for applying the fault finding procedure to stored faults:** The fault is declared present after the engine is started.

Carry out the multiplex network test.

AFTER REPAIR	Clear the computer memory, switch off the ignition, then carry out a road test. Complete the operation by testing with the diagnostic tool.

GETtheMANUALS.org

DF172 **STORED**	INVALID INJECTION MULTIPLEX SIGNALS 1.DEF : Faulty injection engine speed signal

NOTES	**Conditions for applying the fault finding procedure to stored faults:** The fault is declared present after the engine is started.

Carry out the multiplex network test.

AFTER REPAIR	Clear the computer memory, switch off the ignition, then carry out a road test. Complete the operation by testing with the diagnostic tool.

GETtheMANUALS.org

NOTES	Only perform this conformity check after a complete check with the diagnostic tool.

Order	Function	Parameter or state Check or action	Display and notes	Fault finding
1	Diagnostic tool dialogue		Automatic gearbox SU2001	CHART 1
2	Selector lever position detection	**ET012:** Selector lever position	**P** = Park **R** = Reverse **N** = Neutral **D** = Drive	**DF094**
3	Lever contact operation in **P** position	**ET043:** Lever no. 0 contact **ET044:** Lever no. 1 contact **ET045:** Lever no. 2 contact **ET046:** Lever no. 3 contact	**Closed** Open Open **Closed**	**DF094**
4	Lever contact operation in **R** position	**ET043:** Lever no. 0 contact **ET044:** Lever no. 1 contact **ET045:** Lever no. 2 contact **ET046:** Lever no. 3 contact	**Closed** **Closed** Open Open	**DF094**
5	Lever contact operation in **N** position	**ET043:** Lever no. 0 contact **ET044:** Lever no. 1 contact **ET045:** Lever no. 2 contact **ET046:** Lever no. 3 contact	Open **Closed** Open **Closed**	**DF094**
6	Lever contact operation in **D** position	**ET043:** Lever no. 0 contact **ET044:** Lever no. 1 contact **ET045:** Lever no. 2 contact **ET046:** Lever no. 3 contact	Open **Closed** **Closed** Open	**DF094**

GETtheMANUALS.org

NOTES	Only perform this conformity check after a complete check with the diagnostic tool.

Order	Function	Parameter or state Check or action	Display and notes	Fault finding
7	Gear engaged	**ET013:** Gear engaged	In: P = P - N In: R = R In D or in manual mode: D = 1 to 5 In manual mode: 1 to 5	**NONE**
8	Detection that brake pedal is depressed	**ET018:** Brake pedal	State 1 confirmed (brake pedal depressed)	**ET018**
9	Detection that brake pedal is released	**ET018:** Brake pedal	State 2 confirmed (brake pedal released)	**ET018**
10	Detection that a higher gear is requested	**ET069:** Higher gear one-touch switch (held down)	One-touch switch higher gear state confirmed	**DF093**
11	Detection that a lower gear is requested	**ET070:** Lower gear one-touch switch (pulled out)	One-touch switch lower gear state confirmed	**DF093**
12	Kick-down switch	**ET005:** Kick-down switch	Active kick-down state confirmed after the pedal has passed the point of resistance	**ET005**

GETtheMANUALS.org

NOTES	Only perform this conformity check after a complete check with the diagnostic tool.

Order	Function	Parameter or state Check or action	Display and notes	Fault finding
13	Selector lever locking function	**ET074:** Lever lock electromagnet control	The function is active with the lever in Park, the ignition on and with brake pedal movement.	**ET018** **DF094**
14	Actuator control	**AC024:** Actuator sequential control with selector lever in **P** or **N**	Interpret screen displaying states of faulty circuits	**DF085** **DF086** **DF087** **DF088** **DF089** **DF090** **DF091** **DF092** **DF095**

GETtheMANUALS.org

ET018	BRAKE PEDAL

NOTES	**Special notes:** Only carry out the checks if the depressed and released states are not consistent with the position of the pedal.

STATE 2 Released: Brake pedal depressed.

If brake lights operate:

Ensure the continuity of the connection between **track B3** of the brake light switch connector and **track 25** of the computer connector.

If the brake lights do not operate:

Check the condition and fitting of the brake light switch as well as the brake lights fuse.
Remove the brake pedal switch and check that it is operating correctly:

	Continuity between tracks:	Insulation between tracks:
Switch pressed (Brake pedal released)	**A1** and **B3**	**A3** and **B1**
Switch released (Brake pedal depressed)	**A3** and **B1**	**A1** and **B3**

Replace the switch if necessary.

Check/ensure the presence of **+ after ignition feed** on **tracks A1 and B1** of the brake switch connector.

AFTER REPAIR	Perform a road test then a new test with the diagnostic tool.

GETtheMANUALS.org

ET018 **CONTINUED**	

STATE 1 Depressed: Brake pedal released.

Check the condition and fitting of the brake light switch as well as the brake lights fuse.

Remove the brake pedal switch and check that it is operating correctly:

	Continuity between tracks:	Insulation between tracks:
Switch pressed (Brake pedal released)	**A1** and **B3**	**A3** and **B1**
Switch released (Brake pedal depressed)	**A3** and **B1**	**A1** and **B3**

Replace the switch if necessary.

Check/ensure the presence of **+ after ignition feed** on **tracks A1 and B1** of the brake switch connector.

Check for and ensure insulation from **12 V** on the connection between **track B3** of the brake light switch connector and **track 25** of the computer connector.

AFTER REPAIR	Perform a road test then a new test with the diagnostic tool.

GETtheMANUALS.org

ET005	KICK DOWN

NOTES	**Special notes:** None.

Check the changes to the pedal signal via **PR022**.

Correct information:

No **L**oad: Value between **0 and 16**

Full **L**oad: Value between **224 and 253**

If the value is incorrect, refer to the injection fault finding strategy for information on pedal position sensor faults.

AFTER REPAIR	Clear the computer memory, switch off the ignition, then carry out a road test. Complete the operation by testing with the diagnostic tool.

GETtheMANUALS.org

PR022	ACCELERATOR PEDAL POSITION

NOTES	**Special notes:** None.

Check the changes to the pedal signal via **PR022**.

Correct information:

No **L**oad: Value between **0 and 16**

Full **L**oad: Value between **224 and 253**

If the value is incorrect, refer to the injection fault finding strategy for information on pedal position sensor faults.

AFTER REPAIR	Clear the computer memory, switch off the ignition, then carry out a road test. Complete the operation by testing with the diagnostic tool.

GETtheMANUALS.org

REPLACING THE COMPUTER

After replacing the computer, it is important to test drive the vehicle performing all gear changes, both up and down, several times in order to store the new auto-adaptive parameter values.

SPECIAL FEATURES OF COMPONENT REPLACEMENT:

The SU1 2001 automatic gearbox computer uses auto-adaptive parameters for gear change management and the converter lock-up function.

These auto-adaptive parameters enable the pressure and refill intervals for the brakes and clutches to be optimised as a function of the specific mechanical/hydraulic characteristics of each automatic gearbox. Therefore, replacing any components that influence these parameters requires the stored values to be updated. Using the diagnostic tool, run command RZ005 to reset the auto-adaptives. After using this command, it is essential to test drive the vehicle performing all gear changes, both up and down, several times in order to store the new values.

Reset the auto-adaptive parameters after replacing the following components:
– Hydraulic distributor.
– Torque converter.
– Solenoid valves (EVS1, EVS2, EVS3, EVS4, EVS5).
– 3 solenoid valves (converter lock-up, LS pressure regulation, LT pressure regulation).
– Complete automatic gearbox.

AUTOMATIC GEARBOX
Fault finding - Customer complaints

GETtheMANUALS.org

NOTES	Only consult the customer complaint section after a complete check with the diagnostic tool and a conformity check.

No dialogue with the tool

- **No dialogue with the computer** — **CHART 1**

Instrument panel faults

- **Perform the multiplex network test and then refer to the instrument panel fault finding section.**

Engine starting problems

- **The starter does not engage when the selector lever is in P and/or N position** — **CHART 2**
- **The starter turns, the engine does not start, the instrument panel lights dim, lever in N.** — **CHART 3**
- **The starter engages when the selector lever is in positions other than P or N** — **CHART 4**
- **Vehicle advances or reverses with the lever in position N (more than it should when creeping under 60°C)**. — **CHART 5**

Gear changing faults

- **Erratic gear changes** — **CHART 6**
- **No downchanging in full load position** — **CHART 7**

GETtheMANUALS.org

NOTES	Only consult the customer complaint section after a complete check with the diagnostic tool and a conformity check.

Automatic gearbox operating faults — **CHART 8**

- **No drive in forward or reverse gears**
- **Delayed engagement with engine racing followed by a jolt when started**
- **The vehicle moves sluggishly when started**
- **Jolts, slippage or engine racing when changing gear**
- **No gear change possible, vehicle stuck in one gear**
- **One or more of the gears cannot be selected**
- .....

Other problems

- **Reversing lights do not work** — **CHART 9**
- **Oil present under vehicle** — **CHART 10**

GETtheMANUALS.org

CHART 1	No dialogue with the computer

NOTES	Only consult the customer complaint section after a complete check with the diagnostic tool and a conformity check.

Try to establish dialogue with a computer on another vehicle to make sure that the diagnostic tool is not faulty. If the tool is not causing the fault and dialogue cannot be established with any other computer on the same car, it may be that a faulty computer is disrupting diagnostic line **K**.

Disconnect the computers one at a time to locate the fault.

Check the battery voltage and carry out any operations necessary to obtain a correct voltage **(9.5. < battery voltage < 17.5 V).**

Check that the automatic gearbox supply fuse is present on the passenger compartment fuse board and in good condition.

Check that the computer connector is properly connected and check the condition of its wiring.

Check the automatic gearbox **earths**.

Check that the computer is correctly supplied:
– **Earths on tracks 1 and 15** of the 42-track computer connector.
– **+ after ignition on track 29** of the 42-track computer connector.

Check that the diagnostic socket is correctly supplied:
– + Before ignition feed on track 16
– Earths on track 5

Check / ensure continuity and the insulation of the connections between:

Computer connector track 8 ⟶ **Diagnostic socket track 7**

If dialogue is still not established after these various checks, replace the automatic gearbox computer.

AFTER REPAIR	Check using the diagnostic tool.

GETtheMANUALS.org

CHART 2	The starter motor does not engage, selector lever in position P and / or N

NOTES	Only consult the customer complaint section after a complete check with the diagnostic tool and a conformity check.

Switch on the diagnostic tool.
In **ET012**, check the consistency between the diagnostic tool display and the selector lever locked positions (with the ignition on and the engine stopped).

Is it consistent?

no

yes

Switch off the ignition and disconnect the multifunction switch 10-track connector under the automatic gearbox.
Press the starter and check to see if **12 volts** is present on track 1 of the connector on the vehicle wiring harness side.

Is there 12 volts present on track 1?

no → Ensure the continuity of the connection between **track 1** of the connector and the starter switch.
Ensure that the ignition switch is working properly.

yes

Switch off the ignition and check the continuity between tracks 1 and 4 of the multifunction switch on the gearbox side with the lever in P and N positions.
If continuity is not provided, replace the multifunction switch.
If continuity is correct, ensure there is continuity between track 4 of the connector on the vehicle wiring side and the starter.

Keep the starter pressed and move the selector lever with the brakes applied.

Does the engine start?

yes → Adjust the automatic gearbox control following the procedure described in the Workshop Repair Manual.

no

Check the multifunction switch mounting, the tightness of the two locking bolts on the gearbox control cable then adjust the control.
If the fault persists, replace the multifunction switch.

AFTER REPAIR	Perform a road test then check with the diagnostic tool.

GETtheMANUALS.org

CHART 3	The starter turns, the engine does not start, the instrument panel lights dim, selector lever in N.

NOTES	Only consult the customer complaint section after a complete check with the diagnostic tool and a conformity check.

With the handbrake released, does the vehicle start sluggishly when the starter is pressed?

no → Check the battery charge and the charge circuit operation.

yes ↓

Check the condition of the oil (colour, odour, etc.). Replace the automatic gearbox if the condition of the oil suggests there is an internal fault.

CHART 4	The starter motor engages when the selector lever is in positions other than P or N

NOTES	Only consult the customer complaint section after a complete check with the diagnostic tool and a conformity check.

In **ET012** or using the instrument panel display, check the consistency between the display and the selector lever locked positions (with the ignition on and the engine stopped).
Adjust the automatic gearbox if there is inconsistency.
Replace the multifunction switch if there is consistency (P/N switch faulty).

Adjusting and replacement methods are described in the Workshop Repair Manual.

AFTER REPAIR	Perform a road test then check with the diagnostic tool.

GETtheMANUALS.org

CHART 5	Vehicle advances or reverses with the lever in position N (more than it should when creeping with the oil under 60°C)

NOTES	Only consult the customer complaint section after a complete check with the diagnostic tool and a conformity check.

Using the instrument panel display, or in **ET012** on the diagnostic tool, check the consistency between the display and the selector lever locked positions (with the ignition on and the engine stopped).

Is it consistent?

no → Adjust the control following the recommendations given in the Workshop Repair Manual. Replace the multifunction switch if necessary.

yes ↓

Check the condition of the oil (colour, odour, etc.).

Does the condition of the oil suggest there is an internal fault with the automatic gearbox?

yes → Replace the automatic gearbox.

no ↓

The fault may have been misdiagnosed.

AFTER REPAIR	Perform a road test then check with the diagnostic tool.

GETtheMANUALS.org

CHART 6	Unexpected gear changes

NOTES	Only consult the customer complaint section after a complete check with the diagnostic tool and a conformity check.

Switch on the diagnostic tool.
Use function **ET013** during a road test, with the selector lever in D position.

Is the customer complaint reproduced?

- no → B
- yes ↓

Is dialogue lost when the fault appears?

- yes → Refer to the fault finding strategy relating to lack of dialogue with the tool (CHART 1).
- no ↓

Does state ET018 change when the fault appears, without depressing the brake pedal?

- yes → Adjust the brake switch and check the operation of the brake pedal spring.
- no ↓

Does the display for the selector lever position change when the fault appears? (position D disappears)

- no → B
- yes ↓

Check the adjustment of the external control.
If the fault persists, replace the multifunction switch.

AFTER REPAIR	Perform a road test then check with the diagnostic tool.

GETtheMANUALS.org

CHART 6 CONTINUED	

NOTES	Only consult the customer complaint section after a complete check with the diagnostic tool and a conformity check.

B

Check how the automatic transmission wiring is routed (high voltage interference).
Modify if necessary.

Check the load signal with the engine stopped.
Accelerate slowly and check the load change in **PR022**.

Is the load change regular?

no → Refer to the injection fault finding procedure and check the load potentiometer operation.

yes

Perform an injection operation check
Apply the checks outlined in the relevant fault finding procedure if there is a fault.

Check the engine speed signal in **PR006** during a road test at a regular speed.

Is the engine speed value constant?

no → Refer to the injection fault finding procedure and check the TDC sensor operation.

yes

The fault may have been misdiagnosed.

AFTER REPAIR	Perform a road test then check with the diagnostic tool.

GETtheMANUALS.org

CHART 7	No downchanging in full load position

NOTES	Only consult the customer complaint section after a complete check with the diagnostic tool and a conformity check.

Check the conformity and settings of the accelerator control (consult the Workshop Repair Manual).

Is the accelerator control correct?

no → Adjust the accelerator control again as shown in the Workshop Repair Manual.

yes ↓

Check the load signal with the engine stopped: Accelerate slowly and check the load change in **PR022**.

Is the load change regular?

no → Refer to the injection fault finding procedure and check the load potentiometer.

yes ↓

Check that **ET005** is operating:
Depress the accelerator pedal quickly.

Is ET005 active?

no → See **PR022** processing

yes ↓

The fault may have been misdiagnosed.

AFTER REPAIR	Perform a road test then check with the diagnostic tool.

GETtheMANUALS.org

CHART 8	Automatic gearbox operating faults

NOTES	Only consult the customer complaint section after a complete check with the diagnostic tool and a conformity check.

In **ET012** on the diagnostic tool or on the instrument panel display, check the consistency between the display and the selector lever locked positions (ignition on and engine stopped).

Is it consistent?

- no → Adjust the control following the recommendations given in the Workshop Repair Manual.
- yes ↓

Check the oil level and the condition of the oil (colour, odour, etc.).

Does the condition of the oil suggest there is an internal fault with the automatic gearbox?

- yes → Replace the automatic gearbox.
- no ↓

Top up if necessary. Start the engine.
With the brakes applied, put the selector lever into D and examine the vehicle speed signal in **PR105** while accelerating.

Does the vehicle speed information change?

- yes → Replace the automatic gearbox.
- no ↓

Fit a pressure gauge and check the line pressure with the engine at idle speed and the selector lever in N.

Is the pressure zero?

- yes → Replace the automatic gearbox.
- no ↓

With the engine at idle speed and the selector lever in N position, read the line pressure (correct values between 3.5 and 4.2).

(A)

AFTER REPAIR	Perform a road test then check with the diagnostic tool.

GETtheMANUALS.org

CHART 8
CONTINUED 1

NOTES	Only consult the customer complaint section after a complete check with the diagnostic tool and a conformity check.

(A)

Run the engine to obtain an oil temperature greater than **60°C** in **PR004**.
Move the lever into D with the engine at idle speed and the brakes applied.

Is the line pressure more than 0.2 bar below the pressure reading with the lever in N?

yes → Replace the automatic gearbox.

no

Refer to the procedure and the safety instructions in the Technical Note for carrying out a setting point check on the converter. Perform this check with the lever in D and then R, observing the line pressure and the engine speed.
Theoretical values of line pressure at the setting point:
- **12 bar in D (10.6 to 13.6),**
- **18 bar in R (16.3 to 20.5).**

Are the pressure values correct?

no → Replace the hydraulic distributor and the solenoid valves.
Replace the automatic gearbox if the pressure continues to be incorrect (pressure too low).

yes

Theoretical values of engine speed at the setting point:
- **G9T and P9X engines: 2403 ± 150 rpm**
- **F4Rt engines: 2661 ± 150 rpm**
- **V4Y engines: 2755 ± 150 rpm**

Is the setting point value correct?

no → Replace the torque converter
(a setting point at + **300 rpm** above the value requirements for an automatic gearbox replacement).
Replace the automatic gearbox if the setting point continues to be incorrect.
Note: a setting point which is too low may be linked to a lack of engine power.

yes

(B)

AFTER REPAIR	Perform a road test then check with the diagnostic tool.

GETtheMANUALS.org

CHART 8 CONTINUED 2	

NOTES	Only consult the customer complaint section after a complete check with the diagnostic tool and a conformity check.

B

Perform a road test observing the engine speed on the instrument panel and the indications given by the diagnostic tool in **ET012** (refer to the help section).

Does the engine speed change each time there is a gear change?

no → Replace the hydraulic distributor and the solenoid valves.

yes

The checks carried out have not provided any evidence of a fault and the automatic gearbox appears to be working correctly. If the vehicle does show the customer complaint selected, continue with the entire fault finding procedure.

AFTER REPAIR	Perform a road test then check with the diagnostic tool.

GETtheMANUALS.org

CHART 9	Reversing lights do not work (reverse gear works and the bulbs are sound)

NOTES	Only consult the customer complaint section after a complete check with the diagnostic tool and a conformity check.

Switch off the ignition and disconnect the 10-track connector under the automatic gearbox.
Switch the ignition back on and check to see if + after ignition feed is present on **track 3** of the connector on the vehicle wiring harness side.

Is there + after ignition present on track 3?

no → Ensure the continuity of the connection between **track 3** of the 10-track connector and the passenger compartment interconnection unit.

yes ↓

Switch off the ignition and check the continuity between **tracks 2** and **3** of the connector on the gearbox side with the lever in position R.
If there is no continuity, replace the multifunction switch. If continuity is correct, ensure that there is continuity between **track 2** of the connector on the vehicle wiring harness side and the reversing lights.
Also check the rear lights earth.

AFTER REPAIR	Perform a road test then check with the diagnostic tool.

GETtheMANUALS.org

CHART 10	Oil present under vehicle

NOTES	Only consult the customer complaint section after a complete check with the diagnostic tool and a conformity check.

Wash the automatic gearbox, top up the oil level using the procedure described in the Workshop Repair Manual, dust with talcum powder, run a fault finding test and locate the source of the leak.
Deal with the source of the leak and replace the faulty components.
Check the oil level.

AFTER REPAIR	Perform a road test then check with the diagnostic tool.

GETtheMANUALS.org

VEL SATIS

1 Engine and peripherals

13B DIESEL INJECTION

DENSO Isuzu
Program No.: BF
Vdiag No.: 04, 08, 0C

Fault finding - Introduction	13B - 2
Fault finding - Cleanliness guidelines	13B - 7
Fault finding - System operation	13B - 9
Fault finding - Allocation of computer tracks	13B - 14
Fault finding - Replacement of components	13B - 19
Fault finding - Configuration and programming	13B - 20
Fault finding - Fault summary table	13B - 21
Fault finding - Interpretation of faults	13B - 24
Fault finding - Conformity check	13B - 130
Fault finding - Status summary table	13B - 167
Fault finding - Interpretation of statuses	13B - 168
Fault finding - Parameter summary table	13B - 195
Fault finding - Command summary table	13B - 197
Fault finding - Interpretation of commands	13B - 198
Fault finding - Customer complaints	13B - 210
Fault finding - Fault Finding Chart	13B - 212
Fault finding - Test	13B - 227
Fault finding - Glossary	13B - 246

V4 **Edition Anglaise**

"The repair procedures given by the manufacturer in this document are based on the technical specifications current when it was prepared.

The procedures may be modified as a result of changes introduced by the manufacturer in the production of the various component units and accessories from which his vehicles are constructed."

All rights reserved by Renault s.a.s.

Copying or translating, in part or in full, of this document or use of the service part reference numbering system is forbidden without the prior written authority of Renault s.a.s.

© Renault s.a.s. 2008

GETtheMANUALS.org

1. SCOPE OF THIS DOCUMENT

This document presents the fault finding procedure applicable to all computers with the following specifications:

Vehicle(s): **Vel Satis phase 1 & 2**
Espace IV phase 1
Engine type: **P9X701**
Function concerned: **Diesel injection**

Computer name: **DENSO Isuzu**
Program no.: **BF**
Vdiag no.: **04, 08, 0C**

2. PREREQUISITES FOR FAULT FINDING

Documentation type

Fault finding procedures (this manual):
– Assisted fault finding (integrated into the diagnostic tool), Dialogys.

Wiring Diagrams:
– "Wiring Diagrams" Technical Note for the vehicle (Visu-Schéma CD-ROM).

Type of diagnostic tools
– CLIP + CAN probe

Special tooling required

Special tooling required	
	Multimeter
Elé. 1681	Universal bornier

3. RECAP

Procedure

To run fault finding on the vehicle's computers, switch on the ignition in fault finding mode (forced + after ignition feed).

Proceed as follows:
– vehicle card in reader,
– press and hold start button (longer than **5 seconds**) with start-up conditions not fulfilled,
– connect the diagnostic tool and perform the required operations.

To **cut off + after ignition**, proceed as follows:
– disconnect the diagnostic tool,
– press the Start button twice briefly (less than **3 seconds**),
– ensure that the + after ignition feed has been cut off by checking that the computer indicator lights on the instrument panel have gone out.

GETtheMANUALS.org

Faults

Faults are declared as either present or stored (depending on whether they appeared in a certain context and have disappeared since, or whether they remain present but have not been diagnosed within the current context).

The **present** or **stored** status of faults should be taken into consideration when the **diagnostic tool** is switched on after the + after ignition feed (without any system components being active).

For a **present fault**, apply the procedure described in the **Interpretation of faults** section.

For a **stored fault**, note the faults displayed and apply the instructions in the **Notes** section.

If the fault is **confirmed** when the instructions in the Notes section are applied, the fault is present. Deal with the fault

If the fault is **not confirmed**, check:
- the electrical lines which correspond to the fault,
- the connectors for these lines (for oxidation, bent pins, etc.),
- the resistance of the component detected as faulty,
- the condition of the wires (melted or split insulation, wear).

Conformity check

The aim of the conformity check is to check data that does not produce a fault on the **diagnostic tool** because the data is inconsistent. Therefore, this stage is used to:

- carry out fault finding on faults that do not have a fault display, and which may correspond to a customer complaint.
- check that the system is operating correctly and that there is no risk of a fault recurring after repairs.

This section gives the fault finding procedures for statuses and parameters and the conditions for checking them.

If a status is not behaving normally or a parameter is outside the permitted tolerance values, consult the corresponding fault finding page.

Customer complaints - Fault finding chart

If the test with the **diagnostic tool** is OK but the customer complaint is still present, the fault should be processed by **customer complaints**.

A synopsis of the general procedure to follow is provided on the following page in the form of a flow chart.

GETtheMANUALS.org

4. FAULT FINDING PROCEDURE

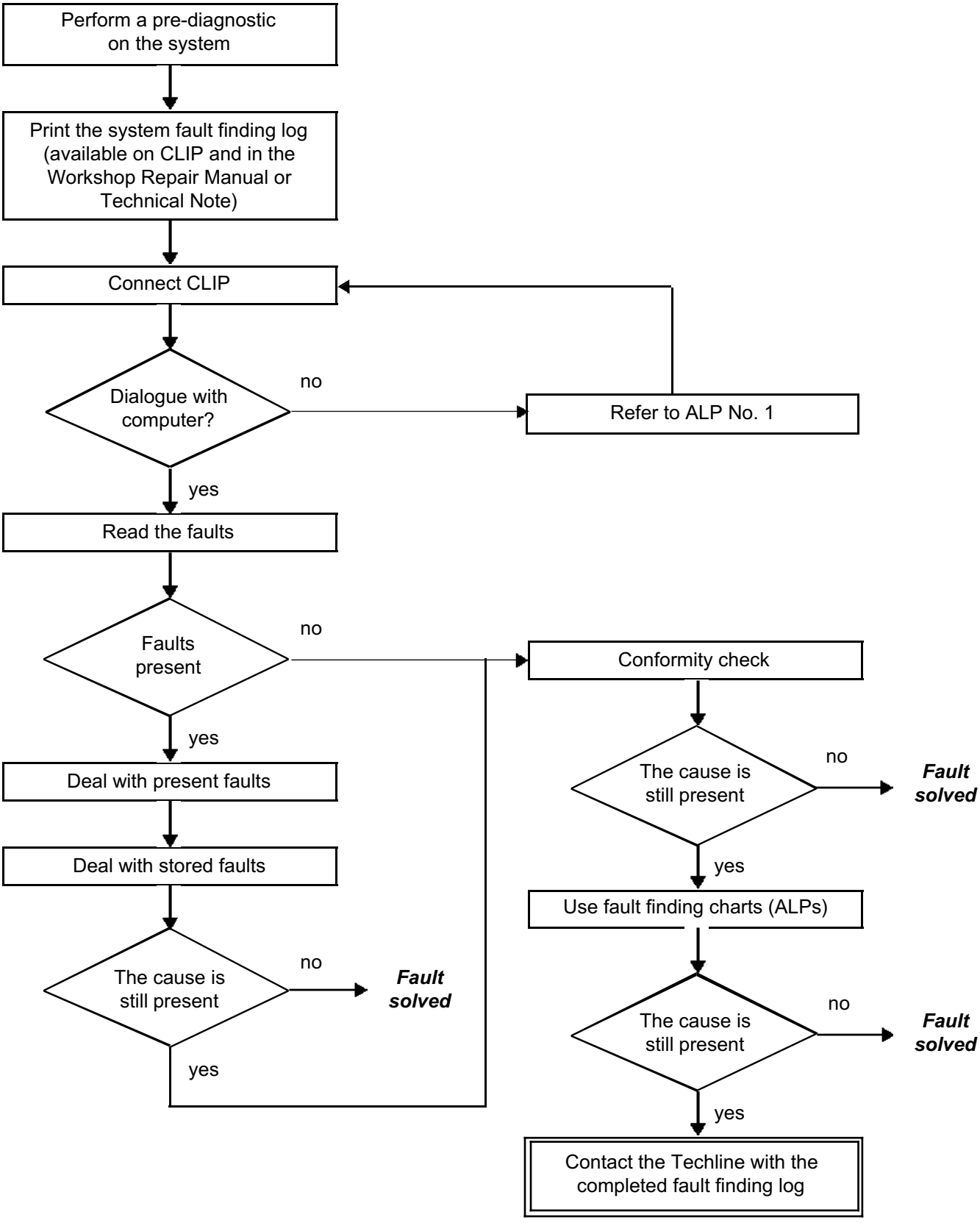

GETtheMANUALS.org

4. FAULT FINDING PROCEDURE (continued)

Wiring check

Fault finding problems
Disconnecting the connectors and/or manipulating the wiring harness may temporarily remove the cause of a fault.
Electrical measurements of voltage, resistance and insulation are generally correct, especially if the fault is not present when the analysis is made (stored fault).

Visual inspection
Look for damage under the bonnet and in the passenger compartment.
Carefully check the fuses, insulators and wiring harness routing.
Look for signs of oxidation.

Tactile inspection
While manipulating the wiring harness, use the diagnostic tool to note any change in fault status from stored to present.
Make sure that the connectors are properly locked.
Apply light pressure to the connectors.
Twist the wiring harness.
If there is a change in status, try to locate the source of the fault.

Inspection of each component
Disconnect the connectors and check the appearance of the clips and tabs, as well as the crimping (no crimping on the insulating section).
Make sure that the clips and tabs are properly locked in the sockets.
Check that no clips or tabs have been dislodged during connection.
Check the clip contact pressure using an appropriate model of tab.

Resistance check
Check the continuity of entire lines, then section by section.
Look for a short circuit to earth, to **+ 12 V** or to another wire.

If a fault is detected, repair or replace the wiring harness.

GETtheMANUALS.org

5. FAULT FINDING LOG

IMPORTANT

IMPORTANT
Any fault on a complex system requires thorough fault finding with the appropriate tools. The FAULT FINDING LOG, which should be completed during the procedure, enables you to keep track of the procedure which is carried out. It is an essential document when consulting the manufacturer.

IT IS THEREFORE MANDATORY TO FILL OUT A FAULT FINDING LOG EACH TIME FAULT FINDING IS CARRIED OUT.

You will always be asked for this log:

- when requesting technical assistance from Techline,
- for approval requests when replacing parts for which approval is mandatory,
- to be attached to monitored parts for which reimbursement is requested. The log is needed for warranty reimbursement, and enables better analysis of the parts removed.

6. SAFETY ADVICE

Safety rules must be observed during any work on a component to prevent any damage or injury:

- check the battery voltage to avoid incorrect operation of computer functions,
- Use the proper tools.

GETtheMANUALS.org

I - RISKS ASSOCIATED WITH CONTAMINATION

The high pressure direct injection system is highly sensitive to contamination. The risks associated with contamination are:
– damage to or destruction of the high pressure injection system,
– components jamming,
– components losing seal integrity.

All After-Sales operations must be performed under very clean conditions. This means that no impurities (particles a few microns in size) should have entered the system during dismantling.

The cleanliness principle must be applied from the filter to the injectors.

What are the sources of contamination?
– metal or plastic swarf,
– paint,
– fibres:
  – from cardboard,
  – from brushes,
  – from paper,
  – from clothing,
  – from cloths,
– foreign bodies such as hair,
– ambient air
– etc.

IMPORTANT
Cleaning the engine using a high pressure washer is prohibited because of the risk of damaging connections. In addition, moisture may collect in the connectors and create electrical connection faults.

II - NOTES TO BE FOLLOWED BEFORE ANY OPERATION

IMPORTANT
Before any work is carried out on the high pressure injection system, protect:
– the accessories and timing belts,
– the electrical accessories, (starter, alternator, electric power-assisted steering pump),
– the flywheel surface, to prevent any diesel from running onto the clutch friction plate.

Check that you have plugs for the unions to be opened (set of plugs available from the Parts Department). The plugs are single-use only. After use, they must be discarded (once used they are soiled and cleaning is not sufficient to make them reusable). Unused plugs must be discarded.

GETtheMANUALS.org

Check that you have hermetically resealable plastic bags for storing removed parts. Parts stored in this way will be less susceptible to the risk of contamination. The bags are to be used once only, and discarded after use.

Use lint-free cleaning cloths (cloth part number **77 11 211 707**). Using normal cloth or paper is prohibited. They are not lint-free and could contaminate the fuel circuit. Each cloth should only be used once.

Use fresh cleaning agent for each operation (used cleaning agent is contaminated). Pour it into an uncontaminated container.

For each operation, use a clean brush in good condition (the brush must not shed its bristles).

Use a brush and cleaning agent to clean the unions to be opened.

Blast compressed air over the cleaned parts (tools, workbench, the parts, unions and injection system zones). Check that no bristles remain.

Wash your hands before and during the operation if necessary.

When wearing leather protective gloves cover them with latex gloves to prevent contamination.

III - INSTRUCTIONS TO BE FOLLOWED DURING THE OPERATION

As soon as the circuit is open, all openings must be plugged to prevent impurities from entering the system. The plugs to be used are available from the Parts Department. The plugs must not be reused under any circumstances.

Seal the pouch shut, even if it has to be opened shortly afterwards. Ambient air carries contamination.

All components removed from the injection system must be stored in a hermetically sealed plastic bag once they have been plugged.

Using a brush, cleaning agent, air gun, sponge or normal cloth is strictly prohibited once the circuit has been opened. These items could allow contamination to enter the system.

A new component replacing an old one must not be removed from its packaging until it is to be fitted to the vehicle.

GETtheMANUALS.org

The high pressure injection system is designed to deliver a precise quantity of diesel fuel to the engine at a set moment.
It is fitted with a **121-track** computer made by **DENSO ISUZU**

The system comprises:
- a priming pump,
- a diesel filter fitted with a heater,
- a high pressure pump with two pumping pistons,
- two high pressure regulators attached to the pump,
- an injector rail,
- a diesel fuel pressure sensor built into the rail,
- a pressure limiter,
- six solenoid injectors,
- a diesel fuel temperature sensor,
- a coolant temperature sensor,
- an air inlet temperature sensor (Vdiag 04, 08 only),
- an oil temperature sensor (Vdiag 0C only),
- a cylinder reference sensor,
- a turbocharging pressure sensor,
- an exhaust gas recirculation solenoid valve,
- an accelerator pedal potentiometer,
- an atmospheric pressure sensor integrated into the injection computer,
- an injection computer,
- a flow sensor (fitted with an OBD air temperature sensor),
- a turbocharging limiter solenoid valve,
- a damper flap solenoid valve.

The "**common rail**" high pressure direct injection system works sequentially (based on the multipoint injection system for petrol engines).

This new injection system reduces operating noise, reduces the volume of pollutant gases and particles and produces high engine torque at low engine speeds thanks to a pre-injection procedure.

The high pressure pump generates the high pressure and transmits it to the injector rail. The actuators located on the pump control the quantity of diesel fuel supplied based on the demand determined by the computer. The rail supplies each injector through a steel pipe.

GETtheMANUALS.org

a) The computer:

This determines the injection pressure value necessary for the engine to operate correctly and then controls the pressure regulators. It checks that the pressure value is correct by analysing the value transmitted by the pressure sensor located on the rail.
It determines the injection timing required to deliver the right quantity of diesel fuel and the moment when injection should start.
Controls each injector electrically and individually after determining these two values.

The flow injected into the engine is determined by:
- the duration of injector control,
- the rail pressure (regulated by the computer),
- the injector opening and closing speed,
- the needle stroke (determined by a constant for the type of injector),
- the nominal hydraulic flow of the injector (specific to each injector),
- the pedal load,
- the engine speed.

The computer manages:
- idling regulation,
- exhaust gas flow reinjection to the inlet,
- the fuel supply (advance, flow and rail pressure),
- the fan unit control via the Switching and Protection Unit (centralised coolant temperature management function),
- the air conditioning (cold loop function),
- the cruise control/speed limiter function,
- pre-post heating control,
- fault warning lights via the multiplex network.

The high pressure pump supplies the rail whose pressure is controlled by the fuel flow actuator for filling and by the injector valves for discharging. This compensates for pressure drops. The flow actuator allows the high pressure pump to supply the exact quantity of diesel fuel required to maintain the pressure in the rail. This component minimises the heat generated and improves engine output.
In order to discharge the rail using the injector valves, the valves are controlled by brief electrical pulses which are:
- short enough not to open the injector (passing through the feedback circuit from the injectors),
- long enough to open the valves and discharge the rail.
- multiplexed connection between the vehicle's various computers.

The fault warning lights on the instrument panel are activated via the multiplex network.

The vehicle speed signal on the instrument panel is transmitted by the ABS system computer or the WHEEL SPEED computer via a wire connection and is then transmitted via the multiplex network by the instrument panel. The main users of the vehicle speed signal are the injection computer and the airbag computer.

Some vehicles have adopted a sensor for detecting water in the diesel fuel, located in the filter. If there is water in the fuel, the orange injection and pre/postheating warning light will come on.

GETtheMANUALS.org

WARNING
The engine must not operate with:
- diesel fuel containing more than 10 % diester,
- petrol, even in tiny quantities.

The system injects diesel fuel into the engine at a pressure of up to **1600 bar**. Before each operation, check that the injector rail is depressurised and that the fuel temperature is not too high.

When working on the high pressure injection system, you must follow the cleanliness guidelines and safety advice specified in this document.

Removal of the internal parts of the pump and injectors is prohibited. Only the fuel flow actuator and the diesel fuel temperature sensor can be replaced.

For safety reasons, it is strictly prohibited to undo a high pressure pipe union when the engine is running.

It is not possible to remove the pressure sensor from the fuel rail because this may cause circuit contamination faults. If the pressure sensor fails, replace the pressure sensor, the rail and the high pressure pipes.

Supplying + 12 V directly to any component in the system is prohibited.

Ultrasonic decoking and cleaning are prohibited.

Never start the engine unless the battery is connected correctly.

Disconnect the injection computer when carrying out any welding work on the vehicle.

GETtheMANUALS.org

b) Management of cruise control/speed limiter:

When activated, the cruise control function maintains the vehicle at a preselected speed, regardless of the driving conditions encountered. Using the control buttons, the driver can increase or reduce the vehicle speed.

The cruise control function can be deactivated either using the control buttons, or by switching off the cruise control function selection switch or when system events are detected (such as the brake pedal being depressed), or when system errors are detected such as an inconsistent vehicle speed or excessive vehicle deceleration.

The cruise control function can also be temporarily suspended when the driver wants to resume control of the vehicle and exceed the selected cruising speed by depressing the accelerator pedal which then exceeds the selected fuel flow. The cruising speed is resumed when the driver releases the accelerator pedal.

The cruise control function can be reactivated and the last cruising speed can be resumed after deactivating the function for whatever reason until the vehicle ignition is switched off (i.e. for as long as computer supply not cut off). The vehicle will then attempt to return to the cruising speed using a controlled vehicle acceleration rate.

When switched on (with the selection switch), the vehicle speed limiter function limits the vehicle speed to a preset value. The driver controls the vehicle in the normal way using the accelerator pedal until the limit speed is reached. If an attempt is made to exceed this speed, the system will ignore the pedal request and will control the vehicle speed in the same way as the cruise control function, provided that the driver keeps the accelerator pedal depressed.
As with the cruise control function, the limit speed can be altered using the control buttons by pressing briefly or pressing and holding.
For safety reasons, it is possible to exceed the limit speed by rapidly depressing the accelerator pedal. The vehicle speed is then controlled by the pedal according to the driver's request. The vehicle's speed limiter is reactivated when the vehicle speed drops below the limit speed again.

The driver has the following controls for the cruise control/speed limiter function:
- accelerator pedal,
- brake pedal,
- function selection switch for selecting speed limiter or cruise control operating mode,
- controls at the steering wheel.

GETtheMANUALS.org

Instrument panel display:

The computer manages the data display on the instrument panel relating to engine operation. This involves 5 functions:
– the EOBD (European On Board Diagnostic) MIL (Malfunction Indicator Lamp),
– pre-postheating,
– the coolant temperature,
– engine faults:
  - Level 1 (non critical fault)
  - Level 2 (emergency stop).

These five functions are represented by 4 warning lights and/or messages displayed by the trip computer.

Pre-postheating warning light:

Permanently on, supplied by + after ignition feed:
indicates preheating of the plugs (automatic timed operation lasting 3 to 6 seconds).

Temperature warning/emergency stop light (level 2):

This light is used as an operation indicator light and as a system fault warning light.
It switches on for 3 seconds when a voltage is applied (automatic test procedure controlled by the instrument panel).

Permanently on: this indicates engine overheating or a level 2 fault.

If the fault reaches a critical level, the injection cuts off automatically after a few seconds. In the event of overheating, it is up to the driver whether to stop the vehicle or continue driving.

OPERATION OF INSTRUMENT PANEL WARNING LIGHTS:

Orange SERVICE non-critical fault warning light (level 1):

This warning light comes on, **along with the "check injection" message**.

The driver should carry out repairs as soon as possible.

Red STOP emergency stop warning light (level 2):

This warning light comes on, **accompanied by the "faulty injection" message.**

The driver should carry out repairs as soon as possible.

Orange OBD excess pollution warning light:

This warning light is represented by an engine, and comes on for approximately 2 seconds when the ignition is switched on, and then goes out.

Continuous lighting: indicates a fault in an engine component preventing emission control standards being met.

The driver should carry out repairs as soon as possible.

GETtheMANUALS.org

Connector A, 81-track

Track	Description
1	+ after ignition feed (main relay)
2	+ after ignition feed (main relay)
3	General earth
4	General earth
5	General earth
6	Not used
7	+ accelerator potentiometer no. 1
8	Accelerator potentiometer no. 2 signal
9	Not used
10	Cruise control/speed limiter programming control
11	– accelerator potentiometer no. 2, – inlet air temperature sensor (Vdiag 04, 08 only) or – oil temperature sensor (Vdiag OC only), – air flowmeter and cruise control/speed limiter control feedback signal
12	Not used
13	Not used
14	Not used
15	Not used
16	Not used
17	Heating element no. 3 relay control - signal (VELSATIS) and passenger compartment heating resistor no. 3 (ESPACE)
18	Fan unit relay 1 - control
19	Preheating relay control
20	Not used
21	Secondary brake pedal switch signal
22	Not used
23	Speed limiter On/Off control
24	Fuse protected + after ignition feed
25	Not used
26	accelerator potentiometer no. 2 + signal and air flow sensor + signal
27	Accelerator potentiometer no. 1 signal
28	Not used
29	Air inlet temperature sensor (Vdiag 04, 08 only) or oil temperature sensor signal (Vdiag OC only)
30	Air flow sensor signal

GETtheMANUALS.org

Connector A, 81-track (continued 1)

Track	Description
31	- accelerator potentiometer no. 1
32	Not used
33	Not used
34	Not used
35	Not used
36	Heating element no. 1 relay control (VELSATIS) and passenger compartment heating resistor no. 1 (ESPACE)
37	Not used
38	Fan unit relay 2 control
39	Not used
40	Not used
41	Not used
42	+ starting supply
43	Not used
44	Injector control unit injector 5 control (power unit)
45	Injector control unit injector 3 control (power unit)
46	Injector control unit injector 1 control (power unit)
47	Not used
48	multiplex line L signal
49	Heater plug fault finding signal 1 (plugs nos. 1, 3 and 5)
50	Diagnostic socket
51	Not used
52	Not used
53	Control - alternator load shedding relay (alternator opto-relay, refer to "**Wiring Diagrams**" Technical Note for the vehicle)
54	Not used
55	Not used
56	Heating element no. 2 relay - control (VELSATIS) and passenger compartment heating resistor no. 2 (ESPACE)
57	Not used
58	Not used
59	Not used
60	Not used
61	Not used
62	Not used

GETtheMANUALS.org

Connector A, 81-track (continued 2)

Track	Description
63	Injector control unit injector 6 control (power unit)
64	Injector control unit injector 4 control (power unit)
65	Injector control unit injector 2 control (power unit)
66	Injector control unit diagnostic signal (power unit)
67	Multiplex line H signal
68	Heater plug fault finding signal 2 (plugs 2, 4 and 6)
69	Not used
70	Not used
71	Not used
72	Not used
73	Not used
74	Not used
75	Not used
76	Control - main relay coil
77	Not used
78	Not used
79	Not used
80	Not used
81	Cruise control On/Off control

GETtheMANUALS.org

Connector B, 40 tracks

Track	Description
82	Injector correction resistance signal 2
83	Injector correction resistance signal 4
84	Injector correction resistance signal 6
85	Not used
86	Not used
87	- group 1 sensor (turbocharging pressure, fuel/rail pressure, EGR potentiometer, turbocharger position)
88	Not used
89	Not used
90	Injector correction resistance signal 1
91	Injector correction resistance signal 3
92	Injector correction resistance signal 5
93	Turbocharging pressure sensor signal
94	EGR potentiometer signal
95	- group 2 sensor (coolant temperature, injector correction resistance 1 to 6, fuel temperature)
96	Not used
97	Turbocharging solenoid valve control
98	group 1 sensor + (turbocharging pressure, fuel/rail pressure, EGR potentiometer, turbocharger position)
99	Coolant temperature sensor signal
100	Fuel temperature sensor signal
101	Turbo position sensor signal
102	Camshaft sensor + signal
103	Camshaft sensor - signal
104	Not used
105	Damper valve control - signal
106	Fuel rail pressure sensor signal 1
107	Fuel rail pressure sensor signal 2
108	Not used
109	Flow sensor OBD air temperature signal (Vdiag OC only)
110	Engine speed sensor + signal

GETtheMANUALS.org

Connector B, 40-track (continued)

Track	Description
111	Engine speed sensor - signal
112	Not used
113	Not used
114	Earth of the engine speed sensor and camshaft sensor
115	EGR solenoid valve - control
116	High pressure fuel solenoid valve 1 and 2 + signal
117	Not used
118	Not used
119	Not used
120	Fuel high pressure solenoid valve 2 - control
121	Fuel high pressure solenoid valve 1 - control

GETtheMANUALS.org

COMPUTER REPLACEMENT OR REPROGRAMMING

The system can be programmed and reprogrammed via the diagnostic socket using the RENAULT CLIP diagnostic tool (**Consult Technical Note 3585A or follow the instructions provided by the diagnostic tool**).

IMPORTANT
- **switch on the diagnostic tool (mains or cigarette lighter supply),**
- **connect a battery charger,**
- **shut down all the electrical consumers (lights, interior lights, air conditioning, radio CD, etc.),**
- **wait for the engine to cool (engine coolant temperature below 60 ˚C and air temperature below 50 ˚C).**

Every time the computer has been reprogrammed or replaced
- **switch the ignition off and then on again.**
- **start and then stop the engine (for automatic programming) and wait 40 seconds.**
- **use the diagnostic tool to carry out the following procedures:**
  1.Use the **VP010 Write VIN** command.
  2. Carry out a road test followed by another check with the diagnostic tool.

IMPORTANT
It is not possible to try an injection computer coming from the Parts Department because it will no longer be possible to use it on another vehicle.

GETtheMANUALS.org

Summary of available settings

NOTES	The settings are made to inform the vehicle computer of the vehicle VIN and the engine idling speed.

VP010: Enter VIN
This setting allows the VIN to be entered in the injection computer.
Use this command each time the computer is replaced or (re)programmed.

VP007: Decrease idling speed
This setting is used to decrease the engine's idling speed by a maximum of 50 rpm, in 10 rpm steps.

VP011: Increase idling speed
This setting is used to increase the engine's idling speed by a maximum of 50 rpm, in 10 rpm steps.

VP036: Inhibit fuel supply
This command allows you to block the diesel circuit upstream of the injectors in order to carry out an engine cylinder compression test.

VP037: End fuel supply inhibition
This command restores fuel supply to the injectors.

GETtheMANUALS.org

WARNING LIGHT MANAGEMENT

Management of instrument panel warning lights according to the faults notified.

Fault	Associated DTC code	Level 1 fault warning light (SERVICE or orange heater plugs "on" indicator light)	Level 2 fault warning light (STOP or red overheating warning light)	No fault warning light lit	OBD warning light
DF001 Coolant temperature sensor circuit	1001	CC.1/CO.0/DEF			DEF
DF003 Atmospheric pressure sensor circuit	1003	CO.0/CC.1			
DF015 Main relay control circuit	1013	CC.0	CO		
DF038 Computer	1074		1.DEF		
DF039 Air inlet temperature sensor (Vdiag 04, 08 only)	1002			CO.0/CC.1	
DF040 Cylinder 1 injector circuit	102E	CO.0	CC.1	CC/CO	CO.0
DF041 Cylinder 2 injector circuit	102F	CO.0	CC.1	CC/CO	CO.0
DF042 Cylinder 3 injector circuit	1030	CO.0	CC.1	CC/CO	CO.0
DF043 Cylinder 4 injector circuit	1031	CO.0	CC.1	CC/CO	CO.0
DF044 Cylinder 5 injector circuit	1032	CO.0	CC.1	CC/CO	CO.0
DF045 Cylinder 6 injector circuit	1033	CO.0	CC.1	CC/CO	CO.0
DF055 Turbocharging pressure regulation circuit	1015	CO/ CC CO.0/CC.1/ 1.DEF/2.DEF/ 3.DEF			
DF056 Air flow sensor circuit	1006	CC.1/CO.0/DEF			CC.1/CO.0/ DEF
DF058 Oil temperature sensor circuit (Vdiag OC only)	0195			CO.0/CC.1	
DF089 Inlet manifold pressure sensor circuit	1004	CC.1/CO.0/DEF			

GETtheMANUALS.org

Fault	Associated DTC code	Level 1 fault warning light (SERVICE or orange heater plugs "on" indicator light)	Level 2 fault warning light (STOP or red overheating warning light)	No fault warning light lit	OBD warning light
DF098 Fuel temperature sensor circuit	1005			CC.1/CO.0	
DF112 Cylinder reference circuit	1008	1.DEF/2.DEF	3.DEF		
DF154 Flywheel signal sensor circuit	1007	1.DEF/2.DEF	6		1.DEF/ 2.DEF
DF175 Supply	102A		2.DEF	1.DEF	
DF176 Low speed fan unit circuit	1017			CO.0/CC.1	
DF177 High speed fan unit circuit	1018			CO.0/CC.1	
DF186 Heater plug circuit	1016			CC.0/CO.1	
DF188 Starting signal	102B			CO.0/CC.1	
DF196 Pedal sensor circuit gang 1	100A	CC/CO.0/1.DEF			
DF197 Fuel pressure information	1009	CO.0/CC.1/ 1.DEF	2.DEF		
DF198 Pedal sensor circuit gang 2	100B	CC/CO.0			
DF208 Fuel pressure solenoid valve circuit	1022	3.DEF/4.DEF	1.DEF/2.DEF		
DF209 EGR valve position sensor circuit	100C	CC.1/CO.0			CC.1/CO.0
DF216 Sensor supply voltage no. 1	100F	DEF			
DF217 Sensor supply voltage no. 2	1010	DEF			
DF218 Microcontroller	103F		DEF		

GETtheMANUALS.org

Fault	Associated DTC code	Level 1 fault warning light (SERVICE or orange heater plugs "on" indicator light)	Level 2 fault warning light (STOP or red overheating warning light)	No fault warning light lit	OBD warning light
DF262 Heater plug group circuit no. 1	1026			DEF	
DF263 Heater plug group circuit no. 2	1027			DEF	
DF264 Power Unit (EDU)	1083		1.DEF		
DF265 Injector no. 1	105E			DEF	
DF266 Injector no. 2	105F			DEF	
DF267 Injector no. 3	1060			DEF	
DF268 Injector no. 4	1061			DEF	
DF269 Injector no. 5	1062			DEF	
DF270 Injector no. 6	1063			DEF	
DF324 OBD air temperature sensor circuit (Vdiag 08, OC only)	1801			CC.1/CO.0	
DF325 Exhaust gas recirculation function	1014	CC.1/CO.0 1.DEF/2.DEF / 3.DEF			CC.1/CO.0/ 1.DEF/ 2.DEF/ 3.DEF
DF374 Computer	1075		1.DEF		
DF767 Power Unit (EDU)	1084		1.DEF		
DF768 Power Unit (EDU)	1085		1.DEF		
DF769 Oil temperature (Vdiag OC only)	0298			1.DEF	

***EDU: Electronic Drive Unit**

GETtheMANUALS.org

DF001 PRESENT OR STORED	COOLANT TEMPERATURE SENSOR CIRCUIT CO.0 : Open circuit or short circuit to earth CC.1 : Short circuit to + 12 V DEF : Inconsistent data

NOTES	**Special notes:** Use bornier **Elé. 1681** for all operations on the engine management computer connectors.

CO.0	***NOTES***	**Conditions for applying the fault finding procedure to stored faults:** The fault is declared as present if: – + after ignition feed present, – the coolant temperature sensor voltage is less than **0.12 V**.

Manipulate the wiring harness between the diesel computer and the coolant temperature sensor in order to detect a status change (present ↔ stored).
Look for possible damage to the harness, and check **the connection and the condition** of the coolant temperature sensor and its connections.
Repair if necessary.

If the fault is still present, check that the thermostat is working correctly.
Check the fill level and sealing of the cooling circuit (see **MR 353, MR 402 or MR 361 Mechanical, 19A, Cooling, Checks**).

Check for **insulation against earth, continuity and the absence of interference resistance** on the following connection:

Coolant temperature sensor **track 1** ⟶ **track B 99** of the diesel computer

Repair if necessary.

Check the **insulation from + 5 V and + 12 V, continuity and absence of interference resistance** on the following connection:

Coolant temperature sensor **track 2** ⟶ **track B 95** of the diesel computer

Repair if necessary.

Measure the **resistance** of the coolant temperature sensor between **tracks 1** and **2** of its connector.
Replace the sensor if the **resistance** is not:
3515 ± 200 Ω at 20 °C
992 ± 100 Ω at 50 °C
475 ± 50 Ω at 70 °C
244 ± 25 Ω at 90 °C

Clear the faults from memory and then start the engine.

If the fault is still present**, contact the Techline**.

AFTER REPAIR	Deal with any faults detected by the diagnostic tool. Clear the computer memory. Carry out a road test followed by another check with the **diagnostic tool**.

GETtheMANUALS.org

DF001 **CONTINUED 1**	

CC.1	***NOTES***	**Conditions for applying the fault finding procedure to stored faults:** The fault is declared as present if: – + after ignition feed present, – the coolant temperature sensor voltage is greater than **4.9 V**.

Manipulate the wiring harness between the diesel computer and the coolant temperature sensor in order to detect a status change (present ↔ stored).
Look for possible damage to the harness, and check **the connection and the condition** of the coolant temperature sensor and its connections.
Repair if necessary.

If the fault is still present, check that the thermostat is working correctly.
Check the fill level and sealing of the cooling circuit (see **MR 353, MR 402 or MR 361 Mechanical, 19A, Cooling, Checks**).

Check for **insulation against earth, continuity and the absence of interference resistance** on the following connection:

Coolant temperature sensor **track 1** ⟶ **track B 99** of the diesel computer

Repair if necessary.

Check the **insulation from + 5 V and + 12 V, continuity and absence of interference resistance** on the following connection:

Coolant temperature sensor **track 2** ⟶ **track B 95** of the diesel computer

Repair if necessary.

Measure the **resistance** of the coolant temperature sensor between **tracks 1** and **2** of its connector.
Replace the sensor if the **resistance** is not:
3515 ± 200 Ω at 20 °C
992 ± 100 Ω at 50 °C
475 ± 50 Ω at 70 °C
244 ± 25 Ω at 90 °C

Clear the faults from memory and then start the engine.

If the fault is still present**, contact the Techline**.

AFTER REPAIR	Deal with any faults detected by the diagnostic tool. Clear the computer memory. Carry out a road test followed by another check with the **diagnostic tool**.

GETtheMANUALS.org

DF001 **CONTINUED 2**	

DEF	***NOTES***	**Priority when dealing with a number of faults:** Deal with **DF001 CC.0** and **CO.1** first if they are present or stored.
		Conditions for applying the fault finding procedure to stored faults: The fault is declared as present if: – following an engine start. – the battery voltage is low, – fault detection time between **14** and **19 min**.

Check the condition of the battery and the charging circuit (see **Technical Note 6014A Charging circuit check**). Check **the condition of the vehicle earths**.
Manipulate the wiring harness between the diesel computer and the coolant temperature sensor in order to detect a status change (present ↔ stored). Look for possible damage to the harness, and check **the connection and the condition** of the coolant temperature sensor and its connections. Repair if necessary.
If the fault is still present, check that the thermostat is working correctly. Check the fill level and sealing of the cooling circuit (see **MR 353, MR 402 or MR 361 Mechanical, 19A, Cooling, Checks**).
Check for **insulation against earth, continuity and the absence of interference resistance** on the following connection: Coolant temperature sensor **track 1** ⟶ **track B 99** of the diesel computer Repair if necessary.
Check the **insulation from + 5 V and + 12 V, continuity and absence of interference resistance** on the following connection: Coolant temperature sensor **track 2** ⟶ **track B 95** of the diesel computer Repair if necessary.
Measure the **resistance** of the coolant temperature sensor between **tracks 1** and **2** of its connector. Replace the sensor if the **resistance** is not: **3515 ± 200 Ω at 20 °C** **992 ± 100 Ω at 50 °C** **475 ± 50 Ω at 70 °C** **244 ± 25 Ω at 90 °C**
Clear the faults from memory and then start the engine.
If the conformity check does not detect the fault, contact the Techline.

AFTER REPAIR	Deal with any faults detected by the diagnostic tool. Clear the computer memory. Carry out a road test followed by another check with the **diagnostic tool**.

GETtheMANUALS.org

DF003 PRESENT OR STORED	ATMOSPHERIC PRESSURE SENSOR CIRCUIT CO.0 : Open circuit or short circuit to earth CC.1 : Short circuit to + 12 V

NOTES	**Special notes:** Use bornier **Elé. 1681** for all operations on the engine management computer connectors.

CO.0	***NOTES***	**Conditions for applying the fault finding procedure to stored faults:** The fault is declared as present if: – the atmospheric pressure sensor voltage is less than **1.16 V**. – the engine is started, – Fault detection time **3 seconds**.

Clear the fault with the diagnostic tool.
If the fault is still present, deal with any other faults. If the fault is still present, **contact Techline**.

CC.1	***NOTES***	**Conditions for applying the fault finding procedure to stored faults:** The fault is declared as present if: – the atmospheric pressure sensor voltage is greater than **4.6 V**. – the engine is started, – Fault detection time **3 seconds**.

Clear the fault with the diagnostic tool.
If the fault is still present, deal with any other faults. If the fault is still present, **contact Techline**.

AFTER REPAIR	Deal with any faults detected by the diagnostic tool. Clear the computer memory. Carry out a road test followed by another check with the **diagnostic tool**.

GETtheMANUALS.org

DF015 STORED	MAIN RELAY control CIRCUIT CO : Open circuit CC.0 : Short circuit to earth

NOTES	**Conditions for applying the fault finding procedure to stored faults:** The fault is declared as present if: – the computer detects an open circuit on **track A 76** or absence of supply on **tracks A 1** and **A 2**, – the engine is switched off.
	Special notes: Use bornier **Elé. 1681** for all operations on the engine management computer connectors.

Manipulate the wiring harness between the diesel computer and the main relay (injection locking relay) to detect a status change (present ↔ stored)
Look for possible damage to the harness, and check **the connection and the condition** of the main relay and its connections.
Repair if necessary.

Check the computer supply voltage **F1 (15A)** fuse, repair if necessary.

Check **the continuity** of the following line:

Main relay **track 15** ⟶ Diesel computer **track A 76**

Repair if necessary.

Check for **insulation from earth, continuity and the absence of interference resistance** on the following connections:

Main relay **track 13** ⟶ Diesel computer **track A 1**

Main relay **track 13** ⟶ Diesel computer **track A 2**

Repair if necessary.

Change over the main relay with another similar relay.
If the fault disappears, replace the relay.

Check for **+ 12 V** on **tracks 16** and **14** of the relay.
Repair if necessary.

Clear the fault memory and start the engine.
If the fault is still present, **contact Techline**.

AFTER REPAIR	Deal with any faults detected by the diagnostic tool. Clear the computer memory. Carry out a road test followed by another check with the **diagnostic tool**.

GETtheMANUALS.org

DF038 PRESENT OR STORED	COMPUTER 1.DEF: Internal electronic fault

NOTES	**Conditions for applying the fault finding procedure to stored faults:** The fault is declared present if the computer detects an internal electrical malfunction.
	Special notes: Use bornier **Elé. 1681** for all operations on the engine management computer connectors.

If the fault is **stored** or **present**, clear the fault from the computer memory.
Switch off the ignition, wait **40 s**, then switch the ignition on again and re-establish dialogue.

If the fault is still present**, contact the Techline**.

AFTER REPAIR	Deal with any faults detected by the diagnostic tool. Clear the computer memory. Carry out a road test followed by another check with the **diagnostic tool**.

GETtheMANUALS.org

DF039 PRESENT OR STORED	INLET AIR TEMPERATURE SENSOR CIRCUIT CO.0 : Short circuit to earth CC.1 : Short circuit or open circuit to + 12 V

NOTES	**Special notes:** Use bornier **Elé. 1681** for all operations on the engine management computer connectors. **Only affects the OBD air temperature sensor at the flow sensor.** **ONLY FOR VDIAG 04 AND 08**

CO.0	***NOTES***	**Conditions for applying the fault finding procedure to stored faults:** The fault is declared as present if: – the air temperature sensor voltage is less than **0.12 V**. – + after ignition feed present.

Move the wiring harness between the diesel computer and the air temperature sensor in order to detect a status change (present ↔ stored).
Look for possible damage to the harness, and check **the connection and the condition** of the air temperature sensor and its connections.
Repair if necessary.

Check for **insulation from earth, continuity and the absence of interference resistance** on the following connections:

Diesel computer **track A 11** ⟶ **Earth**

Repair if necessary.

Measure the **resistance** of the air temperature sensor between **tracks 1** and **2** of its connector.
Replace the sensor if the **resistance** is not:
5728 ± 300 Ω at 10 °C
3515 ± 200 Ω at 20 °C
2268 ± 100 Ω at 30 °C

If the fault is still present, deal with any other faults.

If the fault is still present, contact the Techline.

AFTER REPAIR	Deal with any faults detected by the diagnostic tool. Clear the computer memory. Carry out a road test followed by another check with the **diagnostic tool**.

GETtheMANUALS.org

DF039 **CONTINUED**	

		Priority when dealing with a number of faults: Deal with fault **DF001 Coolant temperature sensor circuit** first, if it is present or stored.
CC.1	***NOTES***	**Conditions for applying the fault finding procedure to stored faults:** The fault is declared as present if: – the air temperature sensor voltage is less than **4.9 V**. – + after ignition present, – engine coolant temperature above **- 25 ˚C**.

Move the wiring harness between the diesel computer and the air temperature sensor in order to detect a status change (present ↔ stored).
Look for possible damage to the harness, and check **the connection and the condition** of the air temperature sensor and its connections.
Repair if necessary.

Check the **insulation, continuity and absence of interference resistance** on the following connections:

Air temperature sensor **track 2** ⟶ Diesel computer **track A 11**

Air temperature sensor **track 1** ⟶ Diesel computer **track A 29**

Repair if necessary.

Measure the **resistance** of the air temperature sensor between **tracks 1** and **3** of its connector.
Replace the sensor if the **resistance** is not:
5728 ± 300 Ω at 10 ˚C
3515 ± 200 Ω at 20 ˚C
2268 ± 100 Ω at 30 ˚C

If the fault is still present, deal with any other faults.

If the fault is still present, contact the Techline.

AFTER REPAIR	Deal with any faults detected by the diagnostic tool. Clear the computer memory. Carry out a road test followed by another check with the **diagnostic tool**.

GETtheMANUALS.org

DF040 PRESENT OR STORED	CYLINDER 1 INJECTOR CIRCUIT CC : Short circuit CO : Open circuit CO.0 : Open circuit or short circuit to earth CC.1 : Short circuit to + 12 V

NOTES	**Special notes:** Use bornier **Elé. 1681** for all operations on the engine management computer connectors.

CC	***NOTES***	**Conditions for applying the fault finding procedure to stored faults:** The fault is declared as present if: – the line voltage is greater than **0.2 V**, – ignition on, – the engine is stopped.

Manipulate the wiring harness between the diesel computer and injector 1 to detect a change in status (present ↔ stored).
Look for any harness damage, and check **the condition and connection** of injector 1 and its connections.
Repair if necessary.

Check the **continuity, insulation from + 12 V and the absence of interference resistance** for the following connection:

Diesel computer **track B 95** ⟶ **track 2** of injector 1

Repair if necessary.

Measure the **resistance** of the injector 1 coil between **tracks 1** and **2** of the injector connector.
Replace the injector if there is a **short circuit (R = 0 Ω)** or an **open circuit (resistance = infinity)**.

If the fault is still present**, contact the Techline**.

AFTER REPAIR	Deal with any faults detected by the diagnostic tool. Clear the computer memory. Carry out a road test followed by another check with the **diagnostic tool**.

GETtheMANUALS.org

DF040 **CONTINUED 1**	

CO	***NOTES***	**Conditions for applying the fault finding procedure to stored faults:** The fault is declared as present if: – the line voltage is greater than **4.8 V**. – ignition on, – the engine is stopped.

Manipulate the wiring harness between the diesel computer and injector 1 to detect a change in status (present ↔ stored).
Look for any harness damage, and check **the condition and connection** of injector 1 and its connections.
Repair if necessary.

Check for **insulation against earth, continuity and the absence of interference resistance** on the following connection:

Diesel computer **track B 90** ⟶ **track 1** of injector 1

Repair if necessary.

Measure the **resistance** of the injector 1 coil between **tracks 1** and **2** of the injector connector.
Replace the injector if there is a **short circuit (R = 0 Ω)** or an **open circuit (resistance = infinity)**.

If the fault is still present**, contact the Techline**.

AFTER REPAIR	Deal with any faults detected by the diagnostic tool. Clear the computer memory. Carry out a road test followed by another check with the **diagnostic tool**.

GETtheMANUALS.org

DF040 **CONTINUED 2**	

CO.0	***NOTES***	**Conditions for applying the fault finding procedure to stored faults:** The fault is declared as present if: – the computer detects a fault on the injector 1 control line. – engine speed greater than **500 rpm**. – battery voltage is greater than **11 V**.

Manipulate the wiring harness between the diesel computer and injector 1 to detect a change in status (present ↔ stored).
Look for any harness damage, and check the **condition and connection points** of injector 1 and its connections.
Repair if necessary.

Check for **insulation from earth, continuity and the absence of interference resistance** on the following connections:

Injector computer, **black connector, track B 7** ⟶ **track 3** of injector 1

Injector computer, **grey connector, track A 3** ⟶ Diesel computer **track A 46**

Repair if necessary.

Check the **insulation** of **tracks 3** and **4** of the injector connector.
Replace the injector if the insulation is not in order.

Clear the fault memory and start the engine.
If the fault is still present**, contact the Techline**.

AFTER REPAIR	Deal with any faults detected by the diagnostic tool. Clear the computer memory. Carry out a road test followed by another check with the **diagnostic tool**.

GETtheMANUALS.org

DF040 **CONTINUED 3**	

CC.1	***NOTES***	**Conditions for applying the fault finding procedure to stored faults:** The fault is declared as present if: – the computer detects a fault on the injector 1 control line. – engine speed greater than **500 rpm**. – battery voltage is greater than **11 V**.

Manipulate the wiring harness between the diesel computer and injector 1 to detect a change in status (present ↔ stored).
Look for any harness damage, and check the **condition and connection points** of injector 1 and its connections.
Repair if necessary.

Check the following connections for **insulation against + 12 V, continuity and absence of interference resistance**:

Injector computer, **black connector, track B 1** → **track 4** of injector 1

Injector computer, **black connector, track B 8** → **Earth**

Repair if necessary.
If the lines are insulated, replace the injector control computer (see **MR 353, MR 402 or MR 361 Mechanical, 13B, Diesel Injection, Power computer**).

Clear the fault memory and start the engine.
If the fault is still present**, contact the Techline**.

AFTER REPAIR	Deal with any faults detected by the diagnostic tool. Clear the computer memory. Carry out a road test followed by another check with the **diagnostic tool**.

GETtheMANUALS.org

DF041 PRESENT OR STORED	CYLINDER 2 INJECTOR CIRCUIT CC : Short circuit CO : Open circuit CO.0 : Open circuit or short circuit to earth CC.1 : Short circuit to + 12 V

NOTES	**Special notes:** Use bornier **Elé. 1681** for all operations on the engine management computer connectors.

CC	***NOTES***	**Conditions for applying the fault finding procedure to stored faults:** The fault is declared as present if: – the line voltage is less than **0.2 V**. – ignition on, – the engine is stopped.

Manipulate the wiring harness between the diesel computer and injector 2 to detect a change in status (present ↔ stored).
Look for any harness damage, and check **the condition and connection** of injector 2 and its connections.
Repair if necessary.

Check the **continuity, insulation from + 12 V and the absence of interference resistance** for the following connection:

Diesel computer **track B 95** ⟶ **track 2** of injector 2

Repair if necessary.

Check the **resistance** of the coil from injector 2 between **tracks 1** and **2** of the injector connector.
Replace the injector if there is a **short circuit (R = 0 Ω)** or an **open circuit (resistance = infinity)**.

Clear the fault memory and start the engine.
If the fault is still present**, contact the Techline**.

AFTER REPAIR	Deal with any faults detected by the diagnostic tool. Clear the computer memory. Carry out a road test followed by another check with the **diagnostic tool**.

GETtheMANUALS.org

DF041 **CONTINUED 1**	

CO	***NOTES***	**Conditions for applying the fault finding procedure to stored faults:** The fault is declared as present if: – the line voltage is greater than **4.8 V**. – ignition on, – the engine is stopped.

Manipulate the wiring harness between the diesel computer and injector 2 to detect a change in status (present ↔ stored).
Look for any harness damage, and check **the condition and connection** of injector 2 and its connections.
Repair if necessary.

Check for **insulation against earth, continuity and the absence of interference resistance** on the following connection:

Diesel computer **track B 82** ⟶ **track 1** of injector 2

Repair if necessary.

Check the **resistance** of the coil from injector 2 between **tracks 1** and **2** of the injector connector.
Replace the injector if there is a **short circuit (R = 0 Ω)** or an **open circuit (resistance = infinity)**.

Clear the fault memory and start the engine.
If the fault is still present**, contact the Techline**.

AFTER REPAIR	Deal with any faults detected by the diagnostic tool. Clear the computer memory. Carry out a road test followed by another check with the **diagnostic tool**.

GETtheMANUALS.org

DF041 **CONTINUED 2**	

CO.0	***NOTES***	**Conditions for applying the fault finding procedure to stored faults:** The fault is declared present: – if the injection computer detects an injector 2 control line fault. – engine speed greater than **500 rpm**. – battery voltage is greater than **11 V**.

Manipulate the wiring harness between the diesel computer and injector 2 to detect a change in status (present ↔ stored).
Look for any harness damage, and check **the condition and connection** of injector 2 and its connections.
Repair if necessary.

Check for **insulation from earth, continuity and the absence of interference resistance** on the following connections:

Injector computer, **black connector, track B 6** → **track 3** of injector 2

Injector computer, **grey connector, track A 4** → Diesel computer **track A 65**

Repair if necessary.

Check the **insulation** of **tracks 3** and **4** of the injector connector.
Replace the injector if the insulation is not in order.

Clear the fault memory and start the engine.
If the fault is still present**, contact the Techline**.

AFTER REPAIR	Deal with any faults detected by the diagnostic tool. Clear the computer memory. Carry out a road test followed by another check with the **diagnostic tool**.

GETtheMANUALS.org

DF041 **CONTINUED 3**	

CC.1	***NOTES***	**Conditions for applying the fault finding procedure to stored faults:** The fault is declared present: – the computer detects a fault on the injector 2 control line, – engine speed greater than **500 rpm**. – battery voltage is greater than **11 V**.

Manipulate the wiring harness between the diesel computer and injector 2 to detect a change in status (present ↔ stored).
Look for any harness damage, and check **the condition and connection** of injector 2 and its connections.
Repair if necessary.

Check the following connections for **insulation against + 12 V, continuity and absence of interference resistance**:

Injector computer, **black connector, track B 1** → **track 4** of injector 2

Injector computer, **black connector, track B 8** → **Earth**

Repair if necessary.
If the lines are insulated, replace the injector control computer (see **MR 353, MR 402 or MR 361 Mechanical, 13B, Diesel Injection, Power computer**).

Clear the fault memory and start the engine.
If the fault is still present**, contact the Techline**.

AFTER REPAIR	Deal with any faults detected by the diagnostic tool. Clear the computer memory. Carry out a road test followed by another check with the **diagnostic tool**.

GETtheMANUALS.org

DF042 PRESENT OR STORED	CYLINDER 3 INJECTOR CIRCUIT CC : Short circuit CO : Open circuit CO.0 : Open circuit or short circuit to earth CC.1 : Short circuit to + 12 V

NOTES	**Special notes:** Use bornier **Elé. 1681** for all operations on the engine management computer connectors.

CC	***NOTES***	**Conditions for applying the fault finding procedure to stored faults:** The fault is declared as present if: – the line voltage is less than **0.2 V**. – ignition on, – the engine is stopped.

Manipulate the wiring harness between the diesel computer and injector 3 to detect a change in status (present ↔ stored).
Look for any harness damage, and check **the condition and connection** of injector 3 and its connections.
Repair if necessary.

Check the **continuity, insulation from + 12 V and the absence of interference resistance** for the following connection:

Diesel computer **track B 95** ⟶ **track 2** of injector 3

Repair if necessary.

Check the **resistance** of the coil from injector 3 between **tracks 1** and **2** of the injector connector.
Replace the injector if there is a **short circuit (R = 0 Ω)** or an **open circuit (resistance = infinity)**.

Clear the fault memory and start the engine.
If the fault is still present**, contact the Techline**.

AFTER REPAIR	Deal with any faults detected by the diagnostic tool. Clear the computer memory. Carry out a road test followed by another check with the **diagnostic tool**.

GETtheMANUALS.org

DF042 **CONTINUED 1**	

CO	***NOTES***	**Conditions for applying the fault finding procedure to stored faults:** The fault is declared as present if: – the line voltage is greater than **4.8 V**. – ignition on, – the engine is stopped.

Manipulate the wiring harness between the diesel computer and injector 3 to detect a change in status (present ↔ stored).
Look for any harness damage, and check **the condition and connection** of injector 3 and its connections.
Repair if necessary.

Check for **insulation against earth, continuity and the absence of interference resistance** on the following connection:

Diesel computer **track B 91** ⟶ **track 1** of injector 3

Repair if necessary.

Check the **resistance** of the coil from injector 3 between **tracks 1** and **2** of the injector connector.
Replace the injector if there is a **short circuit (R = 0 Ω)** or an **open circuit (resistance = infinity)**.

Clear the fault memory and start the engine.
If the fault is still present**, contact the Techline**.

AFTER REPAIR	Deal with any faults detected by the diagnostic tool. Clear the computer memory. Carry out a road test followed by another check with the **diagnostic tool**.

GETtheMANUALS.org

DF042 **CONTINUED 2**	

CO.0	***NOTES***	**Conditions for applying the fault finding procedure to stored faults:** The fault is declared as present if: – The injection computer detects an injector 3 control line fault. – engine speed greater than **500 rpm**. – battery voltage is greater than **11 V**.

Manipulate the wiring harness between the diesel computer and injector 3 to detect a change in status (present ↔ stored).
Look for any harness damage, and check **the condition and connection** of injector 3 and its connections.
Repair if necessary.

Check for **insulation against earth, continuity and the absence of interference resistance** on the following connection:

Injector computer, **black connector, track B 5** → **track 3** of injector 3

Injector computer, **grey connector, track A 5** → Diesel computer **track A 45**

Repair if necessary.

Check the **insulation** of **tracks 3** and **4** of the injector connector.
Replace the injector if the insulation is not in order.

Clear the fault memory and start the engine.
If the fault is still present**, contact the Techline**.

AFTER REPAIR	Deal with any faults detected by the diagnostic tool. Clear the computer memory. Carry out a road test followed by another check with the **diagnostic tool**.

GETtheMANUALS.org

DF042 **CONTINUED 3**	

CC.1	***NOTES***	**Conditions for applying the fault finding procedure to stored faults:** The fault is declared as present if: – the computer detects a fault on the injector 3 control line, – engine speed greater than **500 rpm**. – battery voltage is greater than **11 V**.

Manipulate the wiring harness between the diesel computer and injector 3 to detect a change in status (present ↔ stored).
Look for any harness damage, and check **the condition and connection** of injector 3 and its connections.
Repair if necessary.

Check the following connections for **insulation against + 12 V, continuity and absence of interference resistance**:

Injector computer, **black connector, track B 1** → **track 4** of injector 3

Injector computer, **black connector, track B 8** → **Earth**

Repair if necessary.
If the lines are insulated, replace the injector control computer (see **MR 353, MR 402 or MR 361 Mechanical, 13B, Diesel Injection, Power computer**).

Clear the fault memory and start the engine.
If the fault is still present**, contact the Techline**.

AFTER REPAIR	Deal with any faults detected by the diagnostic tool. Clear the computer memory. Carry out a road test followed by another check with the **diagnostic tool**.

GETtheMANUALS.org

DF043 PRESENT OR STORED	CYLINDER 4 INJECTOR CIRCUIT CC : Short circuit CO : Open circuit CO.0 : Open circuit or short circuit to earth CC.1 : Short circuit to + 12 V

NOTES	**Special notes:** Use bornier **Elé. 1681** for all operations on the engine management computer connectors.

CC	***NOTES***	**Conditions for applying the fault finding procedure to stored faults:** The fault is declared as present if: – the line voltage is less than **0.2 V**. – ignition on, – the engine is stopped.

Manipulate the wiring harness between the diesel computer and injector 4 to detect a change in status (present ↔ stored).
Look for any harness damage, and check **the condition and connection** of injector 4 and its connections.
Repair if necessary.

Check the **continuity, insulation from + 12 V and the absence of interference resistance** for the following connection:

Diesel computer **track B 95** ⟶ **track 2** of injector 4

Repair if necessary.

Check the **resistance** of the coil from injector 4 between **tracks 1** and **2** of the injector connector.
Replace the injector if there is a **short circuit (R = 0 Ω)** or an **open circuit (resistance = infinity)**.

Clear the fault memory and start the engine.
If the fault is still present**, contact the Techline**.

AFTER REPAIR	Deal with any faults detected by the diagnostic tool. Clear the computer memory. Carry out a road test followed by another check with the **diagnostic tool**.

GETtheMANUALS.org

DF043 **CONTINUED 1**	

CO	***NOTES***	**Conditions for applying the fault finding procedure to stored faults:** The fault is declared as present if: – the line voltage is greater than **4.8 V**. – ignition on, – the engine is stopped.

Manipulate the wiring harness between the diesel computer and injector 4 to detect a change in status (present ↔ stored).
Look for any harness damage, and check **the condition and connection** of injector 4 and its connections.
Repair if necessary.

Check for **insulation against earth, continuity and the absence of interference resistance** on the following connection:

Diesel computer **track B 83** ⟶ **track 1** of injector 4

Repair if necessary.

Check the **resistance** of the coil from injector 4 between **tracks 1** and **2** of the injector connector.
Replace the injector if there is a **short circuit (R = 0 Ω)** or an **open circuit (resistance = infinity)**.

Clear the fault memory and start the engine.
If the fault is still present**, contact the Techline**.

AFTER REPAIR	Deal with any faults detected by the diagnostic tool. Clear the computer memory. Carry out a road test followed by another check with the **diagnostic tool**.

GETtheMANUALS.org

DF043 **CONTINUED 2**	

CO.0	***NOTES***	**Conditions for applying the fault finding procedure to stored faults:** The fault is declared as present if: – the injection computer detects an injector 4 control line fault. – engine speed greater than **500 rpm**. – battery voltage is greater than **11 V**.

Manipulate the wiring harness between the diesel computer and injector 4 to detect a change in status (present ↔ stored).
Look for any harness damage, and check **the condition and connection** of injector 4 and its connections.
Repair if necessary.

Check for **insulation from earth, continuity and the absence of interference resistance** on the following connections:

Injector computer, **black connector, track B 4** → **track 3** of injector 4

Injector computer, **grey connector, track A 6** → Diesel computer **track A 64**

Repair if necessary.

Check the **insulation** of **tracks 3** and **4** of the injector connector.
Replace the injector if the insulation is not in order.

Clear the fault memory and start the engine.
If the fault is still present**, contact the Techline**.

AFTER REPAIR	Deal with any faults detected by the diagnostic tool. Clear the computer memory. Carry out a road test followed by another check with the **diagnostic tool**.

GETtheMANUALS.org

DF043 **CONTINUED 3**	

CC.1	***NOTES***	**Conditions for applying the fault finding procedure to stored faults:** The fault is declared present: – the computer detects a fault on the injector 4 control line, – engine speed greater than **500 rpm**. – battery voltage is greater than **11 V**.

Manipulate the wiring harness between the diesel computer and injector 4 to detect a change in status (present ↔ stored).
Look for any harness damage, and check **the condition and connection** of injector 4 and its connections.
Repair if necessary.

Check the following connections for **insulation against + 12 V, continuity and absence of interference resistance**:

Injector computer, **black connector, track B 1** → **track 4** of injector 4

Injector computer, **black connector, track B 8** → **Earth**

Repair if necessary.
If the lines are insulated, replace the injector control computer (see **MR 353, MR 402 or MR 361 Mechanical, 13B, Diesel Injection, Power computer**).

Clear the fault memory and start the engine.
If the fault is still present**, contact the Techline**.

AFTER REPAIR	Deal with any faults detected by the diagnostic tool. Clear the computer memory. Carry out a road test followed by another check with the **diagnostic tool**.

GETtheMANUALS.org

DF044 PRESENT OR STORED	CYLINDER 5 INJECTOR CIRCUIT CC : Short circuit CO : Open circuit CO.0 : Open circuit or short circuit to earth CC.1 : Short circuit to + 12 V

NOTES	**Special notes:** Use bornier **Elé. 1681** for all operations on the engine management computer connectors.

CC	***NOTES***	**Conditions for applying the fault finding procedure to stored faults:** The fault is declared as present if: – the line voltage is less than **0.2 V**. – ignition on, – the engine is stopped.

Manipulate the wiring harness between the diesel computer and injector 5 to detect a change in status (present ↔ stored).
Look for any harness damage, and check the **condition and connection points** of injector 5 and its connections.
Repair if necessary.

Check the **continuity, insulation from + 12 V and the absence of interference resistance** for the following connection:

Diesel computer **track B 95** ⟶ **track 2** of injector 5

Repair if necessary.

Check the **resistance** of the coil from injector 5 between **tracks 1** and **2** of the injector connector.
Replace the injector if there is a **short circuit (R = 0 Ω)** or an **open circuit (resistance = infinity)**.

Clear the fault memory and start the engine.
If the fault is still present**, contact the Techline**.

AFTER REPAIR	Deal with any faults detected by the diagnostic tool. Clear the computer memory. Carry out a road test followed by another check with the **diagnostic tool**.

GETtheMANUALS.org

DF044 **CONTINUED 1**	

CO	***NOTES***	**Conditions for applying the fault finding procedure to stored faults:** The fault is declared as present if: – the line voltage is greater than **4.8 V**. – ignition on, – the engine is stopped.

Manipulate the wiring harness between the diesel computer and injector 5 to detect a change in status (present ↔ stored).
Look for any harness damage, and check the **condition and connection points** of injector 5 and its connections.
Repair if necessary.

Check for **insulation against earth, continuity and the absence of interference resistance** on the following connection:

Diesel computer **track B 92** ⟶ **track 1** of injector 5

Repair if necessary.

Check the **resistance** of the coil from injector 5 between **tracks 1** and **2** of the injector connector.
Replace the injector if there is a **short circuit (R = 0 Ω)** or an **open circuit (resistance = infinity)**.

Clear the fault memory and start the engine.
If the fault is still present**, contact the Techline**.

AFTER REPAIR	Deal with any faults detected by the diagnostic tool. Clear the computer memory. Carry out a road test followed by another check with the **diagnostic tool**.

GETtheMANUALS.org

DF044 **CONTINUED 2**	

CO.0	***NOTES***	**Conditions for applying the fault finding procedure to stored faults:** The fault is declared as present if: – the injection computer detects an injector 5 control line fault. – engine speed greater than **500 rpm**. – battery voltage is greater than **11 V**.

Manipulate the wiring harness between the diesel computer and injector 5 to detect a change in status (present ↔ stored).
Look for any harness damage, and check the condition and connection of injector 5 and its connections.
Repair if necessary.

Check for **insulation from earth, continuity and the absence of interference resistance** on the following connections:

Injector computer, **black connector, track B 3** → **track 3** of injector 5

Injector computer, **grey connector, track A 7** → Diesel computer **track A 44**

Repair if necessary.

Check the **insulation** of **tracks 3** and **4** of the injector 5 connector.
Replace the injector if the insulation is not in order.

Clear the fault memory and start the engine.
If the fault is still present**, contact the Techline**.

AFTER REPAIR	Deal with any faults detected by the diagnostic tool. Clear the computer memory. Carry out a road test followed by another check with the **diagnostic tool**.

GETtheMANUALS.org

DF044 **CONTINUED 3**	

CC.1	***NOTES***	**Conditions for applying the fault finding procedure to stored faults:** The fault is declared as present if: – the computer detects a fault on the injector 5 control line, – engine speed greater than **500 rpm**. – battery voltage is greater than **11 V**.

Manipulate the wiring harness between the diesel computer and injector 5 to detect a change in status (present ↔ stored).
Look for any harness damage, and check the condition and connection of injector 5 and its connections.
Repair if necessary.

Check the following connections for **insulation against + 12 V, continuity and absence of interference resistance**:

Injector computer, **black connector, track B 1** ⟶ **track 4** of injector 5

Injector computer, **black connector, track B 8** ⟶ **Earth**

Repair if necessary.
If the lines are insulated, replace the injector control computer (see **MR 353, MR 402 or MR 361 Mechanical, 13B, Diesel Injection, Power computer**).

Clear the fault memory and start the engine.
If the fault is still present**, contact the Techline**.

AFTER REPAIR	Deal with any faults detected by the diagnostic tool. Clear the computer memory. Carry out a road test followed by another check with the **diagnostic tool**.

GETtheMANUALS.org

DF045 PRESENT OR STORED	CYLINDER 6 INJECTOR CIRCUIT CC : Short circuit CO : Open circuit CO.0 : Open circuit or short circuit to earth CC.1 : Short circuit to + 12 V

NOTES	**Special notes:** Use bornier **Elé. 1681** for all operations on the engine management computer connectors.

CC	***NOTES***	**Conditions for applying the fault finding procedure to stored faults:** The fault is declared as present if: – the line voltage is less than **0.2 V**. – ignition on, – the engine is stopped.

Manipulate the wiring harness between the diesel computer and injector 6 to detect a change in status (present ↔ stored).
Look for any harness damage, and check **the condition and connection** of injector 6 and its connections.
Repair if necessary.

Check the **continuity, insulation from + 12 V and the absence of interference resistance** for the following connection:

Diesel computer **track B 95** ⟶ **track 2** of injector 6

Repair if necessary.

Check the **resistance** of the coil from injector 5 between **tracks 1** and **2** of the injector connector.
Replace the injector if there is a **short circuit (R = 0 Ω)** or an **open circuit (resistance = infinity)**.

Clear the fault memory and start the engine.
If the fault is still present**, contact the Techline**.

AFTER REPAIR	Deal with any faults detected by the diagnostic tool. Clear the computer memory. Carry out a road test followed by another check with the **diagnostic tool**.

GETtheMANUALS.org

DF045 **CONTINUED 1**	

CO	***NOTES***	**Conditions for applying the fault finding procedure to stored faults:** The fault is declared as present if: – the line voltage is greater than **4.8 V**. – ignition on, – the engine is stopped.

Manipulate the wiring harness between the diesel computer and injector 6 to detect a change in status (present ↔ stored).
Look for any harness damage, and check **the condition and connection** of injector 6 and its connections.
Repair if necessary.

Check for **insulation against earth, continuity and the absence of interference resistance** on the following connection:

Diesel computer **track B 84** ⟶ **track 1** of injector 6

Repair if necessary.

Check the **resistance** of the coil from injector 6 between **tracks 1** and **2** of the injector connector.
Replace the injector if there is a **short circuit (R = 0 Ω)** or an **open circuit (resistance = infinity)**.

Clear the fault memory and start the engine.
If the fault is still present**, contact the Techline**.

AFTER REPAIR	Deal with any faults detected by the diagnostic tool. Clear the computer memory. Carry out a road test followed by another check with the **diagnostic tool**.

GETtheMANUALS.org

DF045 **CONTINUED 2**	

CO.0	***NOTES***	**Conditions for applying the fault finding procedure to stored faults:** The fault is declared as present if: – the injection computer detects an injector 6 control line fault. – engine speed greater than **500 rpm**. – battery voltage is greater than **11 V**.

Manipulate the wiring harness between the diesel computer and injector 6 to detect a change in status (present ↔ stored).
Look for any harness damage, and check **the condition and connection** of injector 6 and its connections.
Repair if necessary.

Check for **insulation from earth, continuity and the absence of interference resistance** on the following connections:

Injector computer, **black connector, track B 2** → **track 3** of injector 6

Injector computer, **grey connector, track A 8** → Diesel computer **track A 63**

Repair if necessary.

Check the **insulation** of **tracks 3** and **4** of the injector 6 connector.
Replace the injector if the insulation is not in order.

Clear the fault memory and start the engine.
If the fault is still present**, contact the Techline**.

AFTER REPAIR	Deal with any faults detected by the diagnostic tool. Clear the computer memory. Carry out a road test followed by another check with the **diagnostic tool**.

GETtheMANUALS.org

DF045 **CONTINUED 3**	

CC.1	***NOTES***	**Conditions for applying the fault finding procedure to stored faults:** The fault is declared as present if: – the computer detects a fault on the injector 6 control line, – engine speed greater than **500 rpm**. – battery voltage is greater than **11 V**.

Manipulate the wiring harness between the diesel computer and injector 6 to detect a change in status (present ↔ stored).
Look for any harness damage, and check the condition and connection of injector 6 and its connections.
Repair if necessary.

Check the following connections for **insulation against + 12 V, continuity and absence of interference resistance**:

Injector computer, **black connector, track B 1** → **track 4** of injector 6

Injector computer, **black connector, track B 8** → **Earth**

Repair if necessary.
If the lines are insulated, replace the injector control computer (see **MR 353, MR 402 or MR 361 Mechanical, 13B, Diesel Injection, Power computer**).

Clear the fault memory and start the engine.
If the fault is still present**, contact the Techline**.

AFTER REPAIR	Deal with any faults detected by the diagnostic tool. Clear the computer memory. Carry out a road test followed by another check with the **diagnostic tool**.

GETtheMANUALS.org

DF055 PRESENT OR STORED	TURBOCHARGING PRESSURE REGULATION CIRCUIT CO : Open circuit CC : Short circuit CO.0 : Open circuit or short circuit to earth CC.1 : Short circuit to + 12 V 1.DEF: Turbocharging pressure too low 2.DEF: Turbocharging pressure too high 3.DEF: Turbocharging pressure loop error

NOTES	**Special notes:** Use bornier **Elé. 1681** for all operations on the engine management computer connectors. If fault **DF089 Inlet manifold pressure sensor circuit** appears, deal with it first.

CO	***NOTES***	**Conditions for applying the fault finding procedure to stored faults:** The fault is declared present if the voltage on the diagnostic line is less than **0.15 V**.

Manipulate the wiring harness between the diesel computer and the turbocharger position sensor to detect a change in status (present ↔ stored).
Look for possible damage to the harness, and check **the condition and connection** of the turbocharger position sensor and its connections.
Repair if necessary.

Check for **insulation against earth, continuity and the absence of interference resistance** on the following connection:

Diesel computer **track B 101** → **track 1** of the turbocharger position sensor

Diesel computer **track B 98** → **track 3** of the turbocharger position sensor

Repair if necessary.

Measure the **resistance between tracks 2 and 3** of the **turbo position sensor**.
Replace the sensor if the **resistance** is not between **4 kΩ** and **6 kΩ**.

If the fault is still present**, contact the Techline**.

AFTER REPAIR	Deal with any faults detected by the diagnostic tool. Clear the computer memory. Carry out a road test followed by another check with the **diagnostic tool**.

GETtheMANUALS.org

DF055 **CONTINUED 1**	

CC	***NOTES***	**Conditions for applying the fault finding procedure to stored faults:** The fault is declared present if the voltage on the diagnostic line is greater than **4.95 V**.

Manipulate the wiring harness between the diesel computer and the turbocharger position sensor to detect a change in status (present ↔ stored).
Look for possible damage to the harness, and check **the condition and connection** of the turbocharger position sensor and its connections.
Repair if necessary.

Check the **insulation from + 5 V and + 12 V, continuity and absence of interference resistance** on the following connection:

Diesel computer **track B 87** → **track 2** of the turbocharger position sensor

Diesel computer **track B 101** → **track 1** of the turbocharger position sensor

Repair if necessary.

Measure the **resistance between tracks 2 and 3** of the **turbo position sensor**.
Replace the sensor if the **resistance** is not between **4 kΩ** and **6 kΩ**.

If the fault is still present**, contact the Techline**.

AFTER REPAIR	Deal with any faults detected by the diagnostic tool. Clear the computer memory. Carry out a road test followed by another check with the **diagnostic tool**.

GETtheMANUALS.org

DF055 **CONTINUED 2**	

CO.0	***NOTES***	**Conditions for applying the fault finding procedure to stored faults:** The fault is declared as present if: – the voltage on the diagnostic line is too low, – the computer detects no voltage on **track B 97**.

Manipulate the wiring harness between the diesel computer and the turbocharging pressure solenoid valve in order to detect a status change (present ↔ stored)
Look for possible damage to the harness, and check **the condition and connection** of the turbocharging pressure solenoid valve and its connections.
Repair if necessary.

Check for **insulation against earth, continuity and the absence of interference resistance** on the following connection:

Diesel computer **track B 97** ⟶ **track 1** of the turbocharging pressure solenoid valve

Repair if necessary.

Measure the **resistance** between **tracks 1** and **2** of the turbocharging pressure solenoid valve.
Replace the solenoid valve if its **resistance** is not between **11 Ω** and **13 Ω at 20 °C**.

Check for **insulation, continuity and the absence of interference resistance** of the following connection:

Main relay **track 13** ⟶ **track 2** of the turbocharging pressure solenoid valve

Diesel computer **tracks A 1** and **A 2** ⟶ **track 2** of the turbocharging pressure solenoid valve

If the fault is still present, check the **intermediate connector R115** on **track 2**.
Repair if necessary.

If the fault is still present**, contact the Techline**.

AFTER REPAIR	Deal with any faults detected by the diagnostic tool. Clear the computer memory. Carry out a road test followed by another check with the **diagnostic tool**.

GETtheMANUALS.org

DF055 **CONTINUED 3**	

CC.1	***NOTES***	**Conditions for applying the fault finding procedure to stored faults:** The fault is declared as present if: – the voltage on the diagnostic line is too high, – the computer detects an excessive current on **track B 97**.

Manipulate the wiring harness between the diesel computer and the turbocharging pressure solenoid valve in order to detect a status change (present ↔ stored)
Look for possible damage to the harness, and check **the condition and connection** of the turbocharging pressure solenoid valve and its connections.
Repair if necessary.

Check the **continuity, insulation from + 12 V and the absence of interference resistance** for the following connection:

Diesel computer **track B 97** ⟶ **track 1** of the turbocharging pressure solenoid valve

Repair if necessary.

If the fault is still present**, contact the Techline**.

AFTER REPAIR	Deal with any faults detected by the diagnostic tool. Clear the computer memory. Carry out a road test followed by another check with the **diagnostic tool**.

GETtheMANUALS.org

DF055 **CONTINUED 4**	

1.DEF ***2.DEF***	***NOTES***	**Conditions for applying the fault finding procedure to stored faults:** The fault is declared as present if: – the engine speed is greater than **650 rpm**, – loop difference on the injection flow less than **30 mm^3/st**.
3.DEF		**Conditions for applying the fault finding procedure to stored faults:** The fault is declared as present if: – the engine speed is greater than **650 rpm**, – coolant temperature is between **50** and **100 °C**.

Manipulate the wiring harness between the diesel computer and the turbocharging pressure solenoid valve in order to detect a status change (present ↔ stored)
Look for possible damage to the harness, and check **the condition and connection** of the turbocharging pressure solenoid valve and its connections.
Repair if necessary.

Check for **insulation from earth, continuity and absence of interference resistance** on the following connections:

Diesel computer **track B 97** → **track 1** of the turbocharging pressure solenoid valve

Main relay **track 13** → **track 2** of the turbocharging pressure solenoid valve

Diesel computer **tracks A 1** and **A 2** → **track 2** of the turbocharging pressure solenoid valve

Ensure the presence of **+ 12 V** on **track A 1**

If the fault is still present, check the **intermediate connector R115** on **track 2**.
Repair if necessary.

AFTER REPAIR	Deal with any faults detected by the diagnostic tool. Clear the computer memory. Carry out a road test followed by another check with the **diagnostic tool**.

GETtheMANUALS.org

DF055 **CONTINUED 5**	

Check for **insulation against earth, continuity and the absence of interference resistance** on the following connection:

Diesel computer **track B 101** ⟶ **track 1** of the turbocharger position sensor

Repair if necessary.

Check the **continuity** of the connection between

Diesel computer **track B 98** ⟶ **track 3** of the turbocharger position sensor

Repair if necessary.

Check the **continuity, insulation from + 12 V and the absence of interference resistance** for the following connection:

Diesel computer **track B 87** ⟶ **track 2** of the turbocharger position sensor

Repair if necessary.

If the fault is still present, apply **test 4 "Checking the turbocharging and air inlet circuit"**.
Repair if necessary.
Check that the turbocharger control is not mechanically seized, by applying **test 7 "Variable geometry turbocharger control"**.
Repair if necessary.

Check that the turbocharging pressure solenoid valve flexible hoses are not blocked and do not leak.
Repair if necessary.

Check that the vacuum pump works correctly.
Check the air reservoir sealing ring (vacuum reservoir).

Clear the fault memory and start the engine.
If the fault is still present**, contact the Techline**.

AFTER REPAIR	Deal with any faults detected by the diagnostic tool. Clear the computer memory. Carry out a road test followed by another check with the **diagnostic tool**.

GETtheMANUALS.org

DF056 PRESENT OR STORED	AIR FLOWMETER CIRCUIT CO.0 : Open circuit or short circuit to earth CC.1 : Short circuit to + 12 V DEF : Inconsistent data

NOTES	**Special notes:** Use bornier **Elé. 1681** for all operations on the engine management computer connectors.

CO.0	***NOTES***	**Priority when dealing with a number of faults:** Deal with **DF217 (DEF) Sensor supply voltage no. 2** first if it is present or stored.
		Conditions for applying the fault finding procedure to stored faults: The fault is declared as present if: – the air flow sensor voltage is less than **0.2 V**. – + after ignition feed present.

Manipulate the wiring harness between the diesel computer and the air flow sensor to detect a change in status (present '↔ stored). Look for possible damage to the harness, and check **the condition and connection** of the air flow sensor and its connections. Repair if necessary.
Check the condition of the **F6 (15A) fuse**. Replace the fuse if necessary.
Check for **insulation against earth, continuity and the absence of interference resistance** on the following connection: Air flow sensor **track 5** ⟶ Diesel computer **track A 30** Repair if necessary.
Clear the faults from memory and then start the engine. Check that the fault has disappeared. If the fault reappears, replace the air flow sensor.
Clear the stored faults. Restart the vehicle and wait **30 seconds**.
If the fault is still present**, contact the Techline**. **Perform a new computer fault finding procedure; if the fault reappears contact the Techline.**

AFTER REPAIR	Deal with any faults detected by the diagnostic tool. Clear the computer memory. Carry out a road test followed by another check with the **diagnostic tool**.

GETtheMANUALS.org

DF056 **CONTINUED 1**	

CC.1	***NOTES***	**Priority when dealing with a number of faults:** Deal with **DF217 (DEF) Sensor supply voltage no. 2** first if it is present or stored.
		Conditions for applying the fault finding procedure to stored faults: The fault is declared as present if: – the air flow sensor voltage is greater than **4.9 V**. – + after ignition feed present.

Manipulate the wiring harness between the diesel computer and the air flow sensor to detect a change in status (present '↔ stored).
Look for possible damage to the harness, and check **the condition and connection** of the air flow sensor and its connections.
Repair if necessary.

Check the **continuity, insulation from + 12 V and the absence of interference resistance** for the following connection:

Air flow sensor **track 5** ⟶ Diesel computer **track A 30**

Repair if necessary.

Check for **insulation against earth, continuity and the absence of interference resistance** on the following connection:

Air flow sensor **track 4** ⟶ Diesel computer **track A 26**

Repair if necessary.

Check **insulation from + 5 V, continuity and absence of interference resistance** on the following connection:

Air flow sensor **track 3** ⟶ Diesel computer **track A 11**

Repair if necessary.

Clear the faults from memory and then start the engine.
Check that the fault has disappeared.
If the fault reappears, replace the air flow sensor.

Clear the stored faults.
Restart the vehicle and wait **30 seconds**.

If the fault is still present, deal with any other faults.
Perform a new computer fault finding procedure; if the fault reappears contact the Techline.

AFTER REPAIR	Deal with any faults detected by the diagnostic tool. Clear the computer memory. Carry out a road test followed by another check with the **diagnostic tool**.

GETtheMANUALS.org

DF056 **CONTINUED 2**	

DEF	***NOTES***	**Priority when dealing with a number of faults:** Prioritise the other present or stored faults.
		Conditions for applying the fault finding procedure to stored faults: The fault is declared as present if: – engine speed between **650** and **1050 rpm** stabilised. – detection time greater than **5 seconds**.

Manipulate the wiring harness between the diesel computer and the air flow sensor to detect a change in status (present '↔ stored).
Look for possible damage to the harness, and check **the condition and connection** of the air flow sensor and its connections.
Repair if necessary.

Check the entire air inlet circuit:
– air inlet circuit sealing,
– air filter unit inlet not blocked and filter not clogged,
– no foreign bodies on the air flow sensor grille (visual inspection only).

IMPORTANT
Cleaning the grille with compressed air is prohibited.

Check that the air flow sensor is fitted correctly on the engine inlet air line.
If not, replace the air flow sensor.

Check the **insulation, continuity and absence of interference resistance** on the following connections:

Air flow sensor **track 5** → Diesel computer **track A 30**

Air flow sensor **track 4** → Diesel computer **track A 26**

Air flow sensor **track 3** → Diesel computer **track A 11**

Repair if necessary.

Clear the faults from memory and then start the engine.
Wait **30 seconds** then restart computer fault finding; if the fault reappears, check conformity of the engine with the different parameters.

If the fault is still present**, contact the Techline**.

AFTER REPAIR	Deal with any faults detected by the diagnostic tool. Clear the computer memory. Carry out a road test followed by another check with the **diagnostic tool**.

GETtheMANUALS.org

DF058 PRESENT OR STORED	OIL TEMPERATURE SENSOR CIRCUIT CO.0 : Open circuit or short circuit to earth CC.1 : Short circuit to + 12 V

NOTES	**Special notes:** Use bornier **Elé. 1681** for all operations on the engine management computer connectors. **FOR VDIAG OC ONLY.**

CO.0	***NOTES***	**Conditions for applying the fault finding procedure to stored faults:** The fault is declared present if the voltage on the diagnostic line is less than **0.12 V**.

Manipulate the wiring harness between the diesel computer and the oil temperature sensor in order to detect a status change (present ↔ stored).
Look for possible damage to the harness, and check **the connection and the condition** of the oil temperature sensor and its connections.
Repair if necessary.

Check for **insulation against earth, continuity and the absence of interference resistance** on the following connection:

Diesel computer **track A 11** ⟶ **track 1** of the oil temperature sensor

Repair if necessary.

If the fault is still present**, contact the Techline**.

AFTER REPAIR	Deal with any faults detected by the diagnostic tool. Clear the computer memory. Carry out a road test followed by another check with the **diagnostic tool**.

GETtheMANUALS.org

DF058 **CONTINUED**	

CC.1	***NOTES***	**Conditions for applying the fault finding procedure to stored faults:** The fault is declared present if the voltage on the diagnostic line is greater than **4.97 V**.

Manipulate the wiring harness between the diesel computer and the oil temperature sensor in order to detect a status change (present ↔ stored).
Look for possible damage to the harness, and check **the connection and the condition** of the oil temperature sensor and its connections.
Repair if necessary.

Check **insulation from + 5 V and + 12 V, continuity and absence of interference resistance** on the following connection:

Diesel computer **track A 29** ⟶ **track 2** of the oil temperature sensor

Repair if necessary.

If the fault is still present**, contact the Techline**.

AFTER REPAIR	Deal with any faults detected by the diagnostic tool. Clear the computer memory. Carry out a road test followed by another check with the **diagnostic tool**.

GETtheMANUALS.org

DF089 PRESENT OR STORED	INLET MANIFOLD PRESSURE SENSOR CIRCUIT CO.0 : Open circuit or short circuit to earth CC.1 : Short circuit to + 12 V DEF : Inconsistent data

NOTES	**Special notes:** Use bornier **Elé. 1681** for all operations on the engine management computer connectors.

CO.0	***NOTES***	**Conditions for applying the fault finding procedure to stored faults:** The fault is declared as present if: – the manifold pressure sensor voltage is less than **0.29 V**. – + after ignition on, – battery voltage is greater than **11.6 V**.

Manipulate the wiring harness between the diesel computer and the manifold pressure sensor to detect a change in status (present ↔ stored).
Look for possible damage to the harness, and check **the condition and connection** of the manifold pressure sensor and its connections.
Repair if necessary.

Check for **insulation from earth**, **continuity and the absence of interference resistance** on the following connections:

Manifold pressure sensor, **grey connector, track C** → Diesel computer **track B 93**

Manifold pressure sensor, **grey connector, track A** → Diesel computer **track B 98**

Repair if necessary.

Clear the fault memory and start the engine.
If the fault is still present, replace the manifold pressure sensor (see **MR 353, MR 402 or MR 361 Mechanical, 12A, Fuel mixture, Inlet manifold**).

Clear the fault memory and restart the engine.
If the fault is still present, apply **test 4 "Checking the turbocharging and air inlet circuit"**.
Repair if necessary.
If the fault is still present, apply **test 7: Variable geometry turbocharger command**.
Repair if necessary.
If the fault is still present, contact the Techline.

AFTER REPAIR	Deal with any faults detected by the diagnostic tool. Clear the computer memory. Carry out a road test followed by another check with the **diagnostic tool**.

GETtheMANUALS.org

DF089 **CONTINUED 1**	

CC.1	***NOTES***	**Conditions for applying the fault finding procedure to stored faults:** The fault is declared as present if: – the manifold pressure sensor voltage is greater than **4.5 V**. – + after ignition on, – battery voltage is greater than **11.6 V**.

Measure the **feed** voltage of the turbocharger position feedback sensor using the diagnostic tool.
If the voltage is not between **3.4 V** and **4.5 V**, repair or replace the turbocharger feedback sensor if necessary (see **MR 353, MR 402 or MR 361 Mechanical, 12B, Turbocharging)**.

Start the engine and let it run at **idle speed at 90 ˚C**.
Check the **feed** voltage of the turbocharger position feedback sensor using the diagnostic tool. If the voltage is not between **0.45 V** and **0.55 V**, repair or replace the turbocharger feedback sensor if necessary (see **MR 353, MR 402 or MR 361 Mechanical, 12B, Turbocharging**).

Manipulate the wiring harness between the diesel computer and the manifold pressure sensor to detect a change in status (present ↔ stored).
Look for possible damage to the harness, and check **the condition and connection** of the manifold pressure sensor and its connections.
Repair if necessary.

Check the **continuity, insulation from + 12 V and the absence of interference resistance** for the following connection:

Manifold pressure sensor, **grey connector, track B** → Diesel computer **track B 87**

Repair if necessary.

Stop the engine and check for the presence of **+ 5 V** on **track C** of the pressure sensor with **+ after ignition** on.
If necessary replace the sensor.

Start the engine and wait a few minutes at idle speed at 80 ˚C:
Check the **value** of the **position** and **voltage** of the **EGR valve** using the diagnostic tool in the Parameters menu **PR136 EGR valve position** and **PR160 EGR potentiometer voltage**.
If the EGR valve position value is different from **0 ± 0.1mm** and the voltage is different from **4 ± 0.1 V**, replace the EGR valve.

Clear the fault memory and restart the engine.
If the fault is still present**, contact the Techline**.

AFTER REPAIR	Deal with any faults detected by the diagnostic tool. Clear the computer memory. Carry out a road test followed by another check with the **diagnostic tool**.

GETtheMANUALS.org

DF089 **CONTINUED 2**	

DEF	*NOTES*	**Conditions for applying the fault finding procedure to stored faults:** The fault is declared present: – if the manifold vacuum is **700 mbar** less than atmospheric pressure, see parameter **PR035 "Atmospheric pressure"**. – the engine speed is less than **1050 rpm**, – there is an atmospheric pressure signal without faults, – the fuel flow is less than **15 mm^3/stroke**, – with the vehicle stopped.

Manipulate the wiring harness between the diesel computer and the manifold pressure sensor to detect a change in status (present ↔ stored).
Look for possible damage to the harness, and check **the condition and connection** of the manifold pressure sensor and its connections.
Repair if necessary.

Check the **continuity and the absence of interference resistance** on the following connection:

Manifold pressure sensor, **grey connector, track A** → Diesel computer **track B 93**

Repair if necessary.

Check the **continuity and the absence of interference resistance** on the following connection:

Manifold pressure sensor, **grey connector, track C** → Diesel computer **track B 98**

Repair if necessary.

Check the **continuity and the absence of interference resistance** on the following connection:

Manifold pressure sensor, **grey connector, track B** → Diesel computer **track B 87**

Repair if necessary.

AFTER REPAIR	Deal with any faults detected by the diagnostic tool. Clear the computer memory. Carry out a road test followed by another check with the **diagnostic tool**.

GETtheMANUALS.org

DF089 **CONTINUED 3**	

Clear the fault memory and start the engine.
If the fault is still present, check the air supply circuit between the turbocharger and the inlet manifold.
Check the conformity, **with the engine running**, of **PR041 "Turbocharging pressure"** and **PR146 "Inlet air flow"**.
If the fault is still present, replace the manifold pressure sensor (see **MR 353 or MR 361 Mechanical, 12B, Turbocharging**).

Clear the fault memory and restart the engine.
If the fault is still present, contact the Techline.

AFTER REPAIR	Deal with any faults detected by the diagnostic tool. Clear the computer memory. Carry out a road test followed by another check with the **diagnostic tool**.

GETtheMANUALS.org

DF098 PRESENT OR STORED	FUEL TEMPERATURE SENSOR CIRCUIT CC.1 : Short circuit to + 12 V CO.0 : Open circuit or short circuit to earth

NOTES	**Special notes:** Use bornier **Elé. 1681** for all operations on the engine management computer connectors.

CO.0	***NOTES***	**Priority when dealing with a number of faults:** Deal with **DF217 (DEF) Sensor supply voltage no. 2** first if it is present or stored.
		Conditions for applying the fault finding procedure to stored faults: The fault is declared as present if: – fuel temperature sensor voltage is less than **0.12 V**. – + after ignition feed present.

Manipulate the wiring harness between the diesel computer and the fuel temperature sensor in order to detect a status change (present ↔ stored).
Look for possible damage to the harness, and check **the connection and the condition** of the fuel temperature sensor and its connections.
Repair if necessary.

Check the **insulation, continuity and absence of interference resistance** on the following connections:

Fuel temperature sensor **track 1** ⟶ Diesel computer **track B 100**

Fuel temperature sensor **track 2** ⟶ **track B 95** of the diesel computer

Repair if necessary.

Check for **insulation against earth, continuity and the absence of interference resistance** on the following connection:

Fuel temperature sensor **track 2** ⟶ **Earth**

Replace the fuel temperature sensor, if necessary.

Measure the **resistance** of the coolant temperature sensor between **tracks 1** and **2** of its connector.
Replace the sensor if the **resistance** is not:
5728 ± 300 Ω at 10 ˚C
3515 ± 200 Ω at 20 ˚C
992 ± 100 Ω at 50 ˚C

If the fault is still present, deal with any other faults.

If the fault is still present**, contact the Techline**.

AFTER REPAIR	Deal with any faults detected by the diagnostic tool. Clear the computer memory. Carry out a road test followed by another check with the **diagnostic tool**.

GETtheMANUALS.org

DF098 **CONTINUED**	

		Priority when dealing with a number of faults: Deal with **DF217 (DEF) Sensor supply voltage no. 2** first if it is present or stored.
CC.1	***NOTES***	**Conditions for applying the fault finding procedure to stored faults:** The fault is declared as present if: – the fuel temperature sensor voltage is greater than **4.9 V**. – + after ignition feed present.

Manipulate the wiring harness between the diesel computer and the fuel temperature sensor in order to detect a status change (present ↔ stored). Look for possible damage to the harness, and check **the connection and the condition** of the fuel temperature sensor and its connections. Repair if necessary.
Check the **insulation from + 5 V and + 12 V, continuity and absence of interference resistance** on the following connection: Fuel temperature sensor **track 1** ⟶ Diesel computer **track B 100** Repair if necessary.
Check for **insulation against earth, continuity and the absence of interference resistance** on the following connection: Fuel temperature sensor **track 2** ⟶ Earth Replace the fuel temperature sensor, if necessary.
Measure the **resistance** of the fuel temperature sensor between **tracks 1** and **2** of its connector. Replace the sensor if the **resistance** is not: **5728 ± 300 Ω at 10 °C** **3515 ± 200 Ω at 20 °C** **992 ± 100 Ω at 50 °C**
If the fault is still present, deal with any other faults.
If the fault is still present**, contact the Techline**.

AFTER REPAIR	Deal with any faults detected by the diagnostic tool. Clear the computer memory. Carry out a road test followed by another check with the **diagnostic tool**.

GETtheMANUALS.org

DF112 PRESENT OR STORED	CYLINDER REFERENCE SENSOR CIRCUIT 1.DEF: Camshaft sensor in open circuit 2.DEF: Camshaft signal incoherence 3.DEF: Inconsistency with engine speed

NOTES	**Special notes:** Use bornier **Elé. 1681** for all operations on the engine management computer connectors.

1.DEF	***NOTES***	**Conditions for applying the fault finding procedure to stored faults:** The fault is declared as present if: – the computer only receives the signal from the crankshaft position sensor, – the computer receives no signal from the camshaft position sensor, – battery voltage is greater than **8 V**. – engine speed greater than **600 rpm**.

Manipulate the wiring harness between the diesel computer and the cylinder reference sensor to detect a change in status (present ↔ stored).
Look for possible damage to the harness, and check **the connection and the condition** of the cylinder reference sensor and its connections.
Repair if necessary.

Check for **insulation against earth, continuity and the absence of interference resistance** on the following connection:

Diesel computer **track B 102** ⟶ **track 1 of the cylinder reference sensor**

Repair if necessary.

Check for **insulation against earth, continuity and the absence of interference resistance** on the following connection:

Diesel computer **track B 103** ⟶ **track 2 of the cylinder reference sensor**

Repair if necessary.

Check for **insulation against earth, continuity and the absence of interference resistance** on the following connection:

Diesel computer **track B 110** ⟶ **track 1** of the engine speed sensor

Repair if necessary.

AFTER REPAIR	Deal with any faults detected by the diagnostic tool. Clear the computer memory. Carry out a road test followed by another check with the **diagnostic tool**.

GETtheMANUALS.org

DF112 **CONTINUED 1**	

Check for **insulation against earth, continuity and the absence of interference resistance** on the following connection:

Diesel computer **track B 111** ⟶ **track 2** of the engine speed sensor

Repair if necessary.

Check that the **shielding earth connection** of the camshaft position sensor's electric wiring harness is in **good condition**.

Measure the **resistance** of the **cylinder reference sensor** between **tracks 1 and 2**.
Replace the sensor if the **resistance** is not between **1850 Ω** and **2450 Ω**.

Clear the fault memory and start the engine.
If the fault is still present**, contact the Techline**.

AFTER REPAIR	Deal with any faults detected by the diagnostic tool. Clear the computer memory. Carry out a road test followed by another check with the **diagnostic tool**.

GETtheMANUALS.org

DF112 **CONTINUED 2**	

2.DEF	***NOTES***	**Conditions for applying the fault finding procedure to stored faults:** The fault is declared as present if: – the computer receives an incorrect signal from the camshaft position sensor (value other than **7 pulses per revolution** or signal interference), – the engine speed is greater than **670 rpm.**

Manipulate the wiring harness between the diesel computer and the cylinder reference sensor to detect a change in status (present ↔ stored).
Look for possible damage to the harness, and check **the connection and the condition** of the cylinder reference sensor and its connections.
Repair if necessary.

Check that the **shielding earth connection** of the camshaft position sensor's electric wiring harness is in **good condition**.

Check for **insulation against earth, continuity and the absence of interference resistance** on the following connection:

Diesel computer **track B 110** ⟶ **track 1** of the engine speed sensor

Repair if necessary.

Check for **insulation against earth, continuity and the absence of interference resistance** on the following connection:

Diesel computer **track B 111** ⟶ **track 2** of the engine speed sensor

Repair if necessary.

Measure the **resistance** of the **cylinder reference sensor** between **tracks 1 and 2**.
Replace the sensor if the **resistance** is not between **1850 Ω** and **2450 Ω**.

Clear the fault memory and start the engine.
If the fault is still present**, contact the Techline**.

AFTER REPAIR	Deal with any faults detected by the diagnostic tool. Clear the computer memory. Carry out a road test followed by another check with the **diagnostic tool**.

GETtheMANUALS.org

DF112 **CONTINUED 3**	

3.DEF	***NOTES***	**Conditions for applying the fault finding procedure to stored faults:** The fault is declared as present if: – the computer detects a major phase shift between the camshaft and the crankshaft. **During the starting phase:** – the engine speed is greater than **350 rpm.** – the engine coolant temperature is greater than **20 °C**; **Engine running:** – Engine speed greater than **670 rpm**.

Check that the camshaft position sensor connectors and the crankshaft position sensor connectors are in **good condition**.
Repair if necessary.

Check that the **shielding earth connection** of the camshaft position sensor's electric wiring harness is in **good condition**.

Check that the **timing belt** is correctly **tensioned** and **adjusted**.
Check that the **timing belt pulleys** are correctly **adjusted** on the camshafts and the crankshaft.

Check the **condition** and the **position** of the **target on the camshaft**.
Replace the target if it does not have **6 slots** in sound condition.
Check that the camshaft position sensor is in **good condition** and replace it if necessary.

Check the **condition** and the **position** of the **target on the crankshaft**.
Replace the target if it does not have **24 slots** in sound condition.
Check that the crankshaft position sensor is in **good condition** and replace it if necessary.

Check for **insulation against earth, continuity and the absence of interference resistance** on the following connection:

Diesel computer **track B 110** ⟶ **track 1** of the engine speed sensor

Repair if necessary.

Check for **insulation against earth, continuity and the absence of interference resistance** on the following connection:

Diesel computer **track B 111** ⟶ **track 2** of the engine speed sensor

Repair if necessary.

If the fault is still present, replace both sensors (see **MR 353, MR 402 or MR 361 Mechanical, 10A, Engine and peripherals**).
If the fault is still present, **contact Techline**.

AFTER REPAIR	Deal with any faults detected by the diagnostic tool. Clear the computer memory. Carry out a road test followed by another check with the **diagnostic tool**.

GETtheMANUALS.org

DF154 PRESENT OR STORED	FLYWHEEL SIGNAL SENSOR CIRCUIT 1.DEF: Engine speed sensor in open circuit 2.DEF: Engine speed inconsistency

NOTES	**Special notes:** Use bornier **Elé. 1681** for all operations on the engine management computer connectors.

1.DEF	***NOTES***	**Conditions for applying the fault finding procedure to stored faults:** The fault is declared as present if: – the computer only receives the camshaft position sensor signal, – the computer does not receive a flywheel sensor signal, – when the engine is running.

Check that the **battery** voltage is greater than **11.6 V**.
Check the **condition of the vehicle earths** and the charging circuit (see **Technical Note 6014A, Charging circuit check**).
Replace the battery if necessary.

Manipulate the wiring harness between the diesel computer and the flywheel signal sensor to detect a change in status (present ↔ stored).
Look for possible damage to the harness, and check **the connection and the condition** of the flywheel signal sensor and its connections.
Repair if necessary.

Check the **continuity and the absence of interference resistance** on the following connection:

Flywheel signal sensor **track 1** ⟶ Diesel computer **track B 110**

Repair if necessary.

Check the **continuity and the absence of interference resistance** on the following connection:

Flywheel signal sensor **track 2** ⟶ Diesel computer **track B 111**

Repair if necessary.

Check for **insulation against earth, continuity and the absence of interference resistance** on the following connection:

Diesel computer **track B 114** ⟶ **Earth**

Repair if necessary.

AFTER REPAIR	Deal with any faults detected by the diagnostic tool. Clear the computer memory. Carry out a road test followed by another check with the **diagnostic tool**.

GETtheMANUALS.org

DF154 **CONTINUED**	

If the fault is still present, check the **condition** of the flywheel signal sensor electric wiring harness **shielding earth**. Repair if necessary.
Check that the **shielding earth connection** of the camshaft position sensor's electric wiring harness is in **good condition**.
Measure the **resistance** of the flywheel signal sensor between **tracks 1** and **2** of its connector. Replace the sensor if the **resistance** is not between **1850 Ω and 2450 Ω at 20 ˚C**.
If the fault is still present**, contact the Techline**.

AFTER REPAIR	Deal with any faults detected by the diagnostic tool. Clear the computer memory. Carry out a road test followed by another check with the **diagnostic tool**.

GETtheMANUALS.org

DF175 PRESENT OR STORED	SUPPLY 1.DEF: Feed voltage too high. 2.DEF: Feed voltage too low

NOTES	**Special notes:** Use bornier **Elé. 1681** for all operations on the engine management computer connectors.

1.DEF	***NOTES***	**Conditions for applying the fault finding procedure to stored faults:** The fault is declared present when: – the computer is supplied with a voltage greater than **15.8 V**. – the heating elements are disconnected, – when the engine is running.

Check the charging circuit (see **Technical Note 6014A, Charging circuit check**).
Check **the condition** of the **vehicle earths**.

Check that the feed voltage is around **14.4 V** and that it never exceeds **15.8 V**.
Repair if necessary.

Check the **continuity and the absence of interference resistance** on the following connection:

Diesel computer **track A 24** → **track 28** of the fuse box (F6)
→ **track 2** of the alternator

Repair if necessary.

If the fault is still present**, contact the Techline**.

AFTER REPAIR	Deal with any faults detected by the diagnostic tool. Clear the computer memory. Carry out a road test followed by another check with the **diagnostic tool**.

GETtheMANUALS.org

DF175 **CONTINUED 1**	

2.DEF	***NOTES***	**Conditions for applying the fault finding procedure to stored faults:** The fault is declared as present if: – the computer is supplied with a voltage less than **11.6 V**. – the heating elements are disconnected, – when the engine is running. **Special note:** – **level 2 fault warning light** illuminated.

Check the **condition of the battery** and the charging circuit (see **Technical Note 6014A, Charging circuit check**).
Check **the condition** of the **vehicle earths**.

Check that the feed voltage is around **14.4 V** and that it is never less than **11.6 V**.
Repair if necessary.

During the **starting phase**, check that the alternator is **working correctly**.
Replace the alternator if necessary.
If the alternator is not working correctly, check **the condition** of the **F3 fuse (30 A)**.
Repair if necessary.

A) Vehicle without alternator load shedding (refer to the **Wiring Diagrams** Technical Note for the vehicle):
Check for **continuity and the absence of interference resistance** on the following connection:

Alternator relay track 1 → **Track A24** of the injection computer
Alternator relay track 2 →

Repair if necessary.

B) Vehicle with alternator load shedding (refer to the **Wiring Diagrams** Technical Note for the vehicle):
Check for **+ 12 V** on **tracks 52** and **48** of the alternator load shedding relay (opto relay).
If the tracks are not powered, check the **condition** of the **F6 fuse (10 A)**.

Check the **continuity and the absence of interference resistance** on the following connection:

Fuse box (F3) **track 24** → **track 3** of the alternator

Repair if necessary.

AFTER REPAIR	Deal with any faults detected by the diagnostic tool. Clear the computer memory. Carry out a road test followed by another check with the **diagnostic tool**.

GETtheMANUALS.org

DF175 **CONTINUED 2**	

Check the **continuity and the absence of interference resistance** on the following connection:

Diesel computer **track A 53** → **track 50** of the alternator opto relay

Diesel computer **track A 24** → **track 28** of the fuse box (F6)

Fuse box (F6) **track 28** → **tracks 52** and **48** of the alternator opto relay

Alternator opto relay **track 51** → **track 2** of the alternator

Repair if necessary.

If the fault is still present**, contact the Techline**.

AFTER REPAIR	Deal with any faults detected by the diagnostic tool. Clear the computer memory. Carry out a road test followed by another check with the **diagnostic tool**.

GETtheMANUALS.org

DF176 PRESENT OR STORED	LOW-SPEED FAN UNIT CIRCUIT CO.0 : Open circuit or short circuit to earth CC.1 : Short circuit to + 12 V

NOTES	**Special notes:** Use bornier **Elé. 1681** for all operations on the engine management computer connectors.

CO.0	***NOTES***	**Conditions for applying the fault finding procedure to stored faults:** The fault is declared as present if: – the computer does not detect voltage on **track A 18** when operating the relay, – under + APC,
		Special note: Run the **AC038 Low speed fan relay** command to check whether the relay is working.

Manipulate the wiring harness between the diesel computer and the fan circuit to detect a status change (present ↔ stored)
Look for possible damage to the wiring harness, check **the connection and condition** of the fan circuit and its connections.
Repair if necessary.

Check the **continuity and the absence of interference resistance** on the following connection:

Low speed fan relay **track 11** ⟶ Diesel computer **track A 18**

Repair if necessary.

Check that the low speed fan unit relay **coil** is not cut and that the contacts are operational.
Replace the relay if necessary.

If the fault is still present**, contact the Techline**.

AFTER REPAIR	Deal with any faults detected by the diagnostic tool. Clear the computer memory. Carry out a road test followed by another check with the **diagnostic tool**.

GETtheMANUALS.org

DF176 **CONTINUED**	

CC.1	***NOTES***	**Conditions for applying the fault finding procedure to stored faults:** The fault is declared present: – the computer does not detect voltage on **track A 18** when operating the relay.
		Special note: Run the **AC038 Low speed fan relay** command to check whether the relay is working.

Manipulate the wiring harness between the diesel computer and the fan circuit to detect a status change (present ↔ stored) Look for possible damage to the wiring harness, check **the connection and condition** of the fan circuit and its connections. Repair if necessary.
Check the **continuity, insulation from + 12 V and the absence of interference resistance** for the following connection: Low speed fan relay **track 11** ⟶ Diesel computer **track A 18** Repair if necessary.
Check that the low speed fan unit relay **coil** is not cut and that the contacts are operational. Replace the relay if necessary.
If the fault is still present**, contact the Techline**.

AFTER REPAIR	Deal with any faults detected by the diagnostic tool. Clear the computer memory. Carry out a road test followed by another check with the **diagnostic tool**.

GETtheMANUALS.org

DF177 PRESENT OR STORED	HIGH-SPEED FAN UNIT CIRCUIT CO.0 : Open circuit or short circuit to earth CC.1 : Short circuit to + 12 V

NOTES	**Special notes:** Use bornier **Elé. 1681** for all operations on the engine management computer connectors.

CO.0	***NOTES***	**Conditions for applying the fault finding procedure to stored faults:** The fault is declared present: – if the computer does not detect voltage on **track A 38** when operating the relay, – under + APC,
		Special note: Run the **AC039 High speed fan unit relay** command to check whether the relay is working.

Manipulate the wiring harness between the diesel computer and the fan circuit to detect a status change.
Look for possible damage to the wiring harness, check **the connection and condition** of the fan circuit and its connections.
Repair if necessary.

Check for **insulation against earth, continuity and the absence of interference resistance** on the following connection:

High speed fan relay **track 60** → Diesel computer **track A 38**

High speed fan relay **track 7** → Diesel computer **track A 38**

Repair if necessary.

Check that the high speed fan unit relay coils are not cut and that the contacts are operational.
Replace the relay if necessary.

If the fault is still present**, contact the Techline**.

AFTER REPAIR	Deal with any faults detected by the diagnostic tool. Clear the computer memory. Carry out a road test followed by another check with the **diagnostic tool**.

GETtheMANUALS.org

DF177 **CONTINUED**	

CC.1	***NOTES***	**Conditions for applying the fault finding procedure to stored faults:** The fault is declared as present if: – the computer does not detect voltage on **track A 38** when operating the relay.
		Special note: Run the **AC039 High speed fan unit relay** command to check whether the relay is working.

Manipulate the wiring harness between the diesel computer and the fan circuit to detect a status change (present ↔ stored)
Look for possible damage to the wiring harness, check **the connection and condition** of the fan circuit and its connections.
Repair if necessary.

Check the **continuity, insulation from + 12 V and the absence of interference resistance** on the following connection:

High speed fan relay **track 60** → Diesel computer **track A 38**
High speed fan relay **track 7** →

Repair if necessary.

Check that the high speed fan relay coil is not cut and that the contacts are working correctly.
Replace the relay if necessary.

If the fault is still present**, contact the Techline**.

AFTER REPAIR	Deal with any faults detected by the diagnostic tool. Clear the computer memory. Carry out a road test followed by another check with the **diagnostic tool**.

GETtheMANUALS.org

DF186 PRESENT OR STORED	HEATER PLUG CIRCUIT CC.0 : Short circuit to earth CO.1 : Short circuit or open circuit to + 12 V

NOTES	**Priority when dealing with a number of faults:** First perform preheating circuit fault finding referring to faults **DF262 Heater plug group no. 1 circuit** then **DF263 Heater plug group no. 2 circuit**.
	Special notes: Use bornier **Elé. 1681** for all operations on the engine management computer connectors.

CC.0	***NOTES***	**Conditions for applying the fault finding procedure to stored faults:** The fault is declared present: – if the voltage on the control line (**track A 68**) is greater than **4.7 V**, – under + APC,

Manipulate the wiring harness between the diesel computer and the preheating unit to detect a status change (present ↔ stored)
Look for possible damage to the harness, and check **the condition and connection** of the preheating unit and its connections.
Repair if necessary.

Check for **insulation from + 12 V, continuity and absence of interference resistance** on the following connections:

Preheating unit track **9** → Diesel computer **track A 49**

Preheating unit track **9** → Diesel computer **track A 68**

Preheating unit **track 8** → Diesel computer **track A 19**

Repair if necessary.

AFTER REPAIR	Deal with any faults detected by the diagnostic tool. Clear the computer memory. Carry out a road test followed by another check with the **diagnostic tool**.

GETtheMANUALS.org

DF186 **CONTINUED 1**	

Check for **insulation from + 12 V, continuity and absence of interference resistance** on the following connections:

Alternator **track 1** → preheating unit **track A 3**

Alternator **track 2** → preheating unit **track B 3**

Repair if necessary.

If the fault is still present, replace the preheating unit (see **MR 353, MR 402 or MR 361 Mechanical, 13C, Preheating, Pre-postheating unit**).

Clear the fault memory and start the engine.
If the fault is still present**, contact the Techline**.

AFTER REPAIR	Deal with any faults detected by the diagnostic tool. Clear the computer memory. Carry out a road test followed by another check with the **diagnostic tool**.

GETtheMANUALS.org

DF186 **CONTINUED 2**	

CO.1	***NOTES***	**Conditions for applying the fault finding procedure to stored faults:** The fault is declared present if the control line voltage (**track A 68**) is greater than **4.7 V**.
		Special note: Run the **AC037 Preheating relay** command to check whether the relay is working.

Manipulate the wiring harness between the diesel computer and the preheating unit to detect a status change (present ↔ stored)
Look for possible damage to the harness, and check **the condition and connection** of the preheating unit and its connections.
Repair if necessary.

Check for **insulation against earth, continuity and the absence of interference resistance** on the following connection:

Preheating unit **track 8** → Diesel computer **track A 19**

Repair if necessary.

Check for **insulation from + 12 V, continuity and absence of interference resistance** on the following connections:

Alternator **track 1** → preheating unit **track A 3**

Alternator **track 2** → preheating unit **track B 3**

Repair if necessary.

Check the wiring harness and the condition between the preheating circuit **70 A** fuse and the preheating unit. Replace it if necessary.

If the fault is still present, replace the preheating unit (see **MR 353, MR 402 or MR 361 Mechanical, 13C, Preheating, Pre-postheating unit**).

Clear the fault memory and start the engine.
If the fault is still present**, contact the Techline**.

AFTER REPAIR	Deal with any faults detected by the diagnostic tool. Clear the computer memory. Carry out a road test followed by another check with the **diagnostic tool**.

GETtheMANUALS.org

DF188 PRESENT OR STORED	STARTING SIGNAL CO.0 : Open circuit or short circuit to earth CC.1 : Short circuit to + 12 V

NOTES	**Special notes:** Use bornier **Elé. 1681** for all operations on the engine management computer connectors.

CO.0	***NOTES***	**Conditions for applying the fault finding procedure to stored faults:** The fault is declared as present if: – the feed voltage is less than **2.7 V** when starting the engine. – the engine speed less than **360 rpm**.

Manipulate the wiring harness between the diesel computer and the starter relay to detect a status change (present ↔ stored)
Look for possible damage to the harness, and check **the connections and condition** of the starter relay and its connections.
Repair if necessary.

Check the **condition of the battery** and the charging circuit (see **Technical Note 6014A, Charging circuit check**).
Check **the condition** of the **vehicle earths**.

Check for **insulation against earth, continuity and the absence of interference resistance** on the following connection:

Diesel computer **track A 42** → starter relay **track 3**

If the fault is still present, check the condition and connection of the **intermediate connector R262**.
Repair if necessary.

If the fault is still present**, contact the Techline**.

AFTER REPAIR	Deal with any faults detected by the diagnostic tool. Clear the computer memory. Carry out a road test followed by another check with the **diagnostic tool**.

GETtheMANUALS.org

DF188 **CONTINUED**	

CC.1	***NOTES***	**Conditions for applying the fault finding procedure to stored faults:** The fault is declared present if voltage is present with the engine stopped.

Manipulate the wiring harness between the diesel computer and the starter relay to detect a status change (present ↔ stored) Look for possible damage to the harness, and check **the connections and condition** of the starter relay and its connections. Repair if necessary.
Check for **+ 12 V** on **track A 42** of the diesel computer. Repair if necessary.
If the fault is still present**, contact the Techline**.

AFTER REPAIR	Deal with any faults detected by the diagnostic tool. Clear the computer memory. Carry out a road test followed by another check with the **diagnostic tool**.

GETtheMANUALS.org

DF196 PRESENT OR STORED	PEDAL SENSOR CIRCUIT GANG NO. 1 1.DEF: Inconsistency between pedal gang 1 and gang 2 CO.0 : Open circuit or short circuit to earth CC : Short circuit

NOTES	**Special notes:** Use bornier **Elé. 1681** for all operations on the engine management computer connectors.

1.DEF	***NOTES***	**Conditions for applying the fault finding procedure to stored faults:** The fault is declared present when there is a large signal difference between potentiometers 1 and 2.

Manipulate the wiring harness between the diesel computer and the accelerator potentiometer to detect a status change (present ↔ stored).
Look for any harness damage, and check **the condition and connection** of the accelerator potentiometer and its connections.
Repair if necessary.

Check the **insulation, continuity and the absence of interference resistance** on the following connections:

Accelerator potentiometer **track 4** → Diesel computer **track A 7**

Accelerator potentiometer **track 3** → Diesel computer **track A 27**

Accelerator potentiometer **track 2** → Diesel computer **track A 31**

Accelerator potentiometer **track 5** → Diesel computer **track A 26**

Accelerator potentiometer **track 6** → Diesel computer **track A 8**

Accelerator potentiometer **track 1** → Diesel computer **track A 11**

If the fault is still present, check the **connection** and **the condition** of the intermediate **R262** connector.
Repair if necessary.

If the fault is still present, replace the accelerator potentiometer (see **MR 353 or MR 402, 361 Mechanical, 13B, Diesel Injection, Accelerator potentiometer**).

If the fault is still present**, contact the Techline**.

AFTER REPAIR	Deal with any faults detected by the diagnostic tool. Clear the computer memory. Carry out a road test followed by another check with the **diagnostic tool**.

GETtheMANUALS.org

DF196 **CONTINUED 1**	

CO.0	***NOTES***	**Conditions for applying the fault finding procedure to stored faults:** The fault is declared present if the voltage on the potentiometer no. 1 signal line is less than **0.17 V**.

Manipulate the wiring harness between the diesel computer and the accelerator potentiometer to detect a status change (present ↔ stored).
Look for any harness damage, and check **the condition and connection** of the accelerator potentiometer and its connections.
Repair if necessary.

Check the **continuity and the absence of interference resistance** on the following connection:

Accelerator potentiometer **track 4** ⟶ Diesel computer **track A 7**

If the fault is still present, check the **connection** and **the condition** of the brown intermediate connector.
Repair if necessary.

Check for insulation against earth, continuity and absence of interference resistance on the following connection:

Accelerator potentiometer **track 2** ⟶ Diesel computer **track A 31**

If the fault is still present, check the **connection** and **the condition** of the intermediate **R262** connector.
Repair if necessary.

Measure the **resistance** of pedal sensor no.1 between **tracks 4** and **2**.
Replace the accelerator potentiometer if the **resistance** is not **1200 ± 500 Ω**.
Replace the sensor if the resistance is not compliant.

If the fault is still present**, contact the Techline**.

AFTER REPAIR	Deal with any faults detected by the diagnostic tool. Clear the computer memory. Carry out a road test followed by another check with the **diagnostic tool**.

GETtheMANUALS.org

DF196 **CONTINUED 2**	

CC	***NOTES***	**Conditions for applying the fault finding procedure to stored faults:** The fault is declared present if the voltage on the potentiometer no. 1 signal line is greater than **3.6 V**.

Manipulate the wiring harness between the diesel computer and the accelerator potentiometer to detect a status change (present ↔ stored).
Look for any harness damage, and check **the condition and connection** of the accelerator potentiometer and its connections.
Repair if necessary.

Check the **continuity and the absence of interference resistance** on the following connection:

Accelerator potentiometer **track 2** ⟶ Diesel computer **track A 31**

If the fault is still present, check the **connection** and **the condition** of the intermediate **R262** connector.
Repair if necessary.

Check the **continuity, insulation from + 12 V and the absence of interference resistance** on the following connection:

Accelerator potentiometer **track 3** ⟶ Diesel computer **track A 27**

If the fault is still present, check the **connection** and **the condition** of the intermediate **R262** connector.
Repair if necessary.

Measure the **resistance** of pedal sensor no.1 between **tracks 4** and **2**.
Replace the accelerator potentiometer if the **resistance** is not **1200 ± 500 Ω**.
If necessary replace the sensor.

If the fault is still present**, contact the Techline**.

AFTER REPAIR	Deal with any faults detected by the diagnostic tool. Clear the computer memory. Carry out a road test followed by another check with the **diagnostic tool**.

GETtheMANUALS.org

DF197 PRESENT OR STORED	FUEL PRESSURE SIGNAL CO.0 : Open circuit or short circuit to earth CC.1 : Short circuit to + 12 V 1.DEF: Measured pressure too low 2.DEF: Measured pressure too high

NOTES	**Special notes:** Use bornier **Elé. 1681** for all operations on the engine management computer connectors.

CO.0	***NOTES***	**Conditions for applying the fault finding procedure to stored faults:** The fault is declared present if the voltage on the fuel pressure signal line is greater than **4.7 V**.

Manipulate the wiring harness between the diesel computer and the fuel rail pressure sensor in order to detect a status change (present ↔ stored)
Look for possible damage to the harness, and check **the connection and the condition** of the fuel rail pressure sensor and its connections.
Repair if necessary.

Check for **insulation from earth**, **continuity and absence of interference resistance** on the fuel pressure signal connections:

Fuel pressure sensor **track 1** → Diesel computer **track B 106**

Fuel pressure sensor **track 1** → Diesel computer **track B 107**

Fuel pressure sensor **track 3** → Diesel computer **track B 98**

Repair if necessary.

Check for **earth** on the following connection:

Fuel pressure sensor **track 2** → Diesel computer **track B 87**

Repair if necessary.

If the fault is still present, replace the injection rail (see **MR 353, MR 402 or MR 361 Mechanical, 13B, Diesel injection, Injection rail**).
If the fault is still present, **contact Techline**.

AFTER REPAIR	Deal with any faults detected by the diagnostic tool. Clear the computer memory. Carry out a road test followed by another check with the **diagnostic tool**.

GETtheMANUALS.org

DF197 **CONTINUED 1**	

CC.1	***NOTES***	**Conditions for applying the fault finding procedure to stored faults:** The fault is declared present if the voltage on the fuel pressure signal line is less than **0.7 V**.

Manipulate the wiring harness between the diesel computer and the fuel rail pressure sensor in order to detect a status change (present ↔ stored)
Look for possible damage to the harness, and check **the connection and the condition** of the fuel rail pressure sensor and its connections.
Repair if necessary.

Check the **insulation against + 5 and + 12 V, the continuity, and absence of interference resistance** on the fuel pressure signal connections:

Fuel pressure sensor **track 1** → Diesel computer **track B 106**

Fuel pressure sensor **track 1** → Diesel computer **track B 107**

Fuel pressure sensor **track 2** → Diesel computer **track B 87**

Repair if necessary.

Check for **+ 5 V** on the following connection:

Fuel pressure sensor **track 3** → Diesel computer **track B 98**

Repair if necessary.

If the fault is still present, replace the injection rail (see **MR 353, MR 402 or MR 361 Mechanical, 13B, Diesel injection, Injection rail**).
If the fault is still present**, contact the Techline**.

AFTER REPAIR	Deal with any faults detected by the diagnostic tool. Clear the computer memory. Carry out a road test followed by another check with the **diagnostic tool**.

GETtheMANUALS.org

DF197 **CONTINUED 2**	

1.DEF	***NOTES***	**Priorities when dealing with a number of faults:** Treat as a priority any other fault that is present or stored.
		Conditions for applying the fault finding procedure to stored faults: The fault is declared as present if: – there is no fuel pressure sensor short circuit or open circuit fault. – there is no power unit fault, – there is no rail pressure solenoid valve fault, – there is no fuel temperature fault. **During the starting phase:** – the rail pressure is greater than **150 bar**. – the engine speed is between **50** and **300 rpm**, – injection flow greater than **5 mm^3/stroke**. **Engine running:**- – the engine speed is between **500** and **5200 rpm**, – the fuel temperature less than **160 ˚C**, – pressure loop difference greater than **150 bar**.

Check the fuel pressure sensor connections.
Check the fuel pressure solenoid valve connections.
Check the engine management computer connections.
Repair if necessary.

Check the condition of the high pressure injection rail and make sure there is no leakage.
Check operation of the fuel pressure regulator (e.g., locked open).
a) For all Vdiags except VELSATIS Vdiag 04:
Check the **ET038 ENGINE** status and parameters **PR364 Fuel flow correction cylinder 1, PR405 Fuel flow correction cylinder 2, PR406 Fuel flow correction cylinder 3, PR365 Fuel flow correction cylinder 4, PR407 Fuel flow correction cylinder 5** and **PR408 Fuel flow correction cylinder 6**, see the conformity check in the **Fuel circuit** sub-function.
Replace the injection rail if necessary.
If the injectors are not faulty, first replace the regulator.
If the fault is still present, replace the high pressure pump (see **MR 353, MR 402, or MR 361 Mechanical, 13B, Diesel Injection, High pressure pump**).
b) For VELSATIS Vdiag 04:
Perform the conformity check in the **Fuel circuit** sub-function.

If the fault is still present**, contact the Techline**.

AFTER REPAIR	Deal with any faults detected by the diagnostic tool. Clear the computer memory. Carry out a road test followed by another check with the **diagnostic tool**.

GETtheMANUALS.org

DF197 **CONTINUED 3**	

2.DEF	***NOTES***	**Priorities when dealing with a number of faults:** Treat as a priority any other fault that is present or stored.
		Conditions for applying the fault finding procedure to stored faults: The fault is declared present: **Engine running:** – engine speed greater than **500 rpm**, – there is no fuel pressure sensor short circuit or open circuit fault. – there is no power unit fault, – **there is no rail pressure solenoid valve fault,** – there is no fuel temperature fault after acceleration.

Check the fuel pressure sensor connections.
Check the fuel pressure solenoid valve connections.
Check the engine management computer connections.
Repair if necessary.

Check the condition of the high pressure injection rail and make sure there is no leakage.
Check operation of the fuel pressure regulator (e.g., locked open).

– check the priming of the low pressure diesel circuit,
– also check the conformity of the diesel filter connections and that the diesel fuel is not saturated with water.
– check that there are no air bubbles between the filter and the low pressure pump,
– Check the seal of the low and high pressure diesel fuel circuits (visual inspection, odour, etc.): pump housing, overpressure valve, pipes, rail and injector unions, injector wells, etc.).

Step 1
– Check the connections of the following components:
- rail pressure sensor,
- fuel pressure regulator,
- computer,
- fuel temperature sensor,
- Also check the condition of the wiring harness (wear, pinching, etc.).

If all of the checks reveal no faults, proceed to stage 2.
Checking the fuel Low Pressure system:
Step 2
– Check the fuel level in the tank:
- Fill up if necessary and reproduce the fault. Otherwise, proceed to step 3.

AFTER REPAIR	Deal with any faults detected by the diagnostic tool. Clear the computer memory. Carry out a road test followed by another check with the **diagnostic tool**.

GETtheMANUALS.org

DF197 **CONTINUED 4**	

Step 3
– check that there are no fuel leaks (odour, etc.):
- repair if necessary, otherwise proceed to step 4.

Step 4
– check the sealing of the Low Pressure circuit:
- if there are air bubbles present or external leaks, check the filter bleed screw, and repair the leaks if necessary.
- if the pipes or hoses are worn or damaged, repair if necessary, otherwise proceed to step 5.

Step 5
– Check the fuel priming bulb:
- If the unit is compressed, check for the loss of load before the unit.
- if the engine is fitted with a priming pump, check the variation of flow in the fuel filter, otherwise go to step 6.

Step 6
– check the condition of the fuel filter:
- replace the filter if it is dirty. The fuel filter tank must be cleaned before the new filter is fitted, to prevent dust particles from being transferred to the high pressure pump and the high pressure circuit.

– ignition on, and engine stopped for over **1 minute**:
– display **PR038 Rail pressure**.
  – if the value is less than **50 bar**, the sensor is OK.
  – if not replace the rail pressure sensor.

For all Vdiags except VELSATIS Vdiag 04:
Check the **ET038 "ENGINE**" status and parameters **PR364 "Fuel flow correction cylinder 1", PR405 "Fuel flow correction cylinder 2", PR406 "Fuel flow correction cylinder 3", PR365 "Fuel flow correction cylinder 4", PR407 "Fuel flow correction cylinder 5"** and **PR408 "Fuel flow correction cylinder 6"**, see the conformity check in the **Fuel circuit** sub-function.

If the fault is still present**, contact the Techline**.

AFTER REPAIR	Deal with any faults detected by the diagnostic tool. Clear the computer memory. Carry out a road test followed by another check with the **diagnostic tool**.

GETtheMANUALS.org

DF198 PRESENT OR STORED	PEDAL SENSOR CIRCUIT GANG NO. 2 CO.0 : Open circuit or short circuit to earth CC : Short circuit

NOTES	**Special notes:** Use bornier **Elé. 1681** for all operations on the engine management computer connectors.

CO.0	***NOTES***	**Conditions for applying the fault finding procedure to stored faults:** The fault is declared present if the voltage on the potentiometer no. 1 signal line is less than **0.17 V**.

Manipulate the wiring harness between the diesel computer and the accelerator potentiometer to detect a status change (present ↔ stored).
Look for any harness damage, and check **the condition and connection** of the accelerator potentiometer and its connections.
Repair if necessary.

Check the **continuity and the absence of interference resistance** on the following connection:

Accelerator potentiometer **track 5** ⟶ Diesel computer **track A 26**

Repair if necessary.

Check for insulation against earth, continuity and absence of interference resistance on the following connection:

Accelerator potentiometer **track 1** ⟶ Diesel computer **track A 11**

Repair if necessary.

Measure the **resistance** of pedal sensor no. 2 between **tracks 5** and **1**.
Replace the accelerator potentiometer if the **resistance** is not **1700 ± 500 Ω**.
If necessary replace the sensor.

If the fault is still present**, contact the Techline**.

AFTER REPAIR	Deal with any faults detected by the diagnostic tool. Clear the computer memory. Carry out a road test followed by another check with the **diagnostic tool**.

GETtheMANUALS.org

DF198 **CONTINUED**	

CC	***NOTES***	**Conditions for applying the fault finding procedure to stored faults:** The fault is declared present if the voltage on the potentiometer no. 1 signal line is greater than **3.6 V**.

Manipulate the wiring harness between the diesel computer and the accelerator potentiometer to detect a status change (present ↔ stored).
Look for any harness damage, and check **the condition and connection** of the accelerator potentiometer and its connections.
Repair if necessary.

Check for insulation against earth, continuity and absence of interference resistance on the following connection:

Accelerator potentiometer **track 1** ⟶ Diesel computer **track A 11**

Repair if necessary.

Check the **continuity, insulation from + 12 V and the absence of interference resistance** for the following connection:

Accelerator potentiometer **track 6** ⟶ Diesel computer **track A 8**

Repair if necessary.

Measure the **resistance** of pedal sensor no. 2 between **tracks 5** and **1**.
Replace the accelerator potentiometer if the **resistance** is not **1700 ± 500 Ω**.
If necessary replace the sensor.

If the fault is still present**, contact the Techline**.

AFTER REPAIR	Deal with any faults detected by the diagnostic tool. Clear the computer memory. Carry out a road test followed by another check with the **diagnostic tool**.

GETtheMANUALS.org

DF208 PRESENT OR STORED	FUEL PRESSURE SOLENOID VALVE CIRCUIT 1.DEF: Open circuit or short circuit to earth 2.DEF: Short circuit to + 12 V 3.DEF: Open circuit or short circuit to earth 4.DEF: Short circuit

NOTES	**Special notes:** Use bornier **Elé. 1681** for all operations on the engine management computer connectors.

1.DEF	***NOTES***	**Conditions for applying the fault finding procedure to stored faults:** The fault is declared as present if: – the computer detects too low a voltage on **tracks B 120** and **B 121**.

Manipulate the wiring harness between the diesel computer and the regulation solenoid valves to detect a change in status (present ↔ stored).
Look for possible damage to the harness, and check **the condition and connection** of the regulating solenoid valves and connections.
Repair if necessary.

Check the **insulation, continuity and absence of interference resistance** on the following connections:

Both regulating solenoid valves **track 2** ⟶ Diesel computer **track B 116**

Repair if necessary.

If the fault is still present**, contact the Techline**.

AFTER REPAIR	Deal with any faults detected by the diagnostic tool. Clear the computer memory. Carry out a road test followed by another check with the **diagnostic tool**.

GETtheMANUALS.org

DF208 **CONTINUED 1**	

2.DEF	***NOTES***	**Conditions for applying the fault finding procedure to stored faults:** The fault is declared as present if: – The computer detects **+ 12 V** on one of its control lines.

Manipulate the wiring harness between the diesel computer and the regulation solenoid valves to detect a change in status (present ↔ stored).
Look for possible damage to the harness, and check **the condition and connection** of the regulating solenoid valves and connections.
Repair if necessary.

Check for **continuity, absence of interference resistance and insulation from + 12 V** on the following connections:

Regulating solenoid valve no. 1 **track 1** → Diesel computer **track B 121**

Regulating solenoid valve no. 2 **track 1** → Diesel computer **track B 120**

Repair if necessary.

If the fault is still present**, contact the Techline**.

AFTER REPAIR	Deal with any faults detected by the diagnostic tool. Clear the computer memory. Carry out a road test followed by another check with the **diagnostic tool**.

GETtheMANUALS.org

DF208 **CONTINUED 2**	

3.DEF	***NOTES***	**Conditions for applying the fault finding procedure to stored faults:** The fault is declared as present if: – the computer detects a voltage of less than **12 V** on **track B 116**.

Manipulate the wiring harness between the diesel computer and the regulation solenoid valves to detect a change in status (present ↔ stored).
Look for possible damage to the harness, and check **the condition and connection** of the regulating solenoid valves and connections.
Repair if necessary.

Check for **insulation against earth, continuity and the absence of interference resistance** on the following connection:

Both regulating solenoid valves **track 2** → Diesel computer **track B 116**

Regulating solenoid valve no. 1 **track 1** → Diesel computer **track B 121**

Regulating solenoid valve no. 2 **track 1** → Diesel computer **track B 120**

Repair if necessary.

Measure the **resistance** of both solenoid valves between **tracks 1** and **2**.
Replace them if the **resistance** is not between **1.3 Ω** and **1.9 Ω**.

Ensure **insulation from earth** of the two solenoid valves, and replace them if necessary.

If the fault is still present**, contact the Techline**.

AFTER REPAIR	Deal with any faults detected by the diagnostic tool. Clear the computer memory. Carry out a road test followed by another check with the **diagnostic tool**.

GETtheMANUALS.org

DF208 **CONTINUED 3**	

4.DEF	***NOTES***	**Conditions for applying the fault finding procedure to stored faults:** The fault is declared as present if: – the computer detects a voltage of more than **12 V** on **tracks B 120** and **B 121**.

Manipulate the wiring harness between the diesel computer and the regulation solenoid valves to detect a change in status (present ↔ stored).
Look for possible damage to the harness, and check **the condition and connection** of the regulating solenoid valves and connections.
Repair if necessary.

Check for **insulation from earth, continuity and absence of interference resistance** on the following connections:

Both regulating solenoid valves **track 2** ⟶ Diesel computer **track B 116**

Repair if necessary.

Measure the **resistance** of both solenoid valves between **tracks 1** and **2**.
Replace them if the **resistance** is not between **1.3 Ω** and **1.9 Ω**.

If the fault is still present**, contact the Techline**.

AFTER REPAIR	Deal with any faults detected by the diagnostic tool. Clear the computer memory. Carry out a road test followed by another check with the **diagnostic tool**.

GETtheMANUALS.org

DF209 PRESENT OR STORED	EGR VALVE POSITION SENSOR CIRCUIT CO.0 : Open circuit or short circuit to earth CC.1 : Short circuit to + 12 V

NOTES	**Special notes:** Use bornier **Elé. 1681** for all operations on the engine management computer connectors.

CO.0	***NOTES***	**Conditions for applying the fault finding procedure to stored faults:** The fault is declared present if the EGR position signal voltage is less than **1.1 V**.

Manipulate the wiring harness between the diesel computer and the EGR valve in order to detect a status change (present ↔ stored)
Look for possible damage to the wiring harness, check **the connection and the condition** of the EGR valve and its connections.
Repair if necessary.

Check for **insulation from earth, continuity and the absence of interference resistance** on the following connections:

EGR valve **track 1** → Diesel computer **track B 94**

EGR valve **track 3** → Diesel computer **track B 98**

Repair if necessary.

If the fault is still present, replace the EGR valve (see **MR 353, MR 402 or MR 361 Mechanical, 12A, Fuel mixture, Exhaust gas recirculation valve**).
If the fault is still present**, contact the Techline**.

AFTER REPAIR	Deal with any faults detected by the diagnostic tool. Clear the computer memory. Carry out a road test followed by another check with the **diagnostic tool**.

GETtheMANUALS.org

DF209 **CONTINUED**	

CC.1	***NOTES***	**Conditions for applying the fault finding procedure to stored faults:** The fault is declared present if the EGR position signal voltage is greater than **4.7 V**.

Manipulate the wiring harness between the diesel computer and the EGR valve in order to detect a status change (present ↔ stored)
Look for possible damage to the wiring harness, check **the connection and the condition** of the EGR valve and its connections.
Repair if necessary.

Check the following connections for **insulation against + 12 V, continuity and absence of interference resistance**:

EGR valve **track 1** → Diesel computer **track B 94**

EGR valve **track 2** → Diesel computer **track B 87**

Repair if necessary.

Measure the **resistance** of the EGR valve between **tracks 4** and **5**.
Replace the EGR valve, if the resistance is not **6.8 ± 0.5 Ω at 20 °C**.
Measure the **resistance** of the EGR valve between **tracks 2** and **3**.
Replace the EGR valve if the resistance is not **5 ± 0.5 Ω at 20 °C**.
(see **MR 353, MR 402 Mechanical, 12A, Fuel mixture, Exhaust gas recirculation valve**).

If the fault is still present, replace the EGR valve (see **MR 353, MR 402 or MR 361 Mechanical, 12A, Fuel mixture, Exhaust gas recirculation valve**).
If the fault is still present**, contact the Techline**.

AFTER REPAIR	Deal with any faults detected by the diagnostic tool. Clear the computer memory. Carry out a road test followed by another check with the **diagnostic tool**.

GETtheMANUALS.org

DF216 PRESENT OR STORED	SENSOR FEED NO. 1 VOLTAGE DEF : Open circuit or short circuit to sensor power supply earth

NOTES	**Conditions for applying the fault finding procedure to stored faults:** The fault is declared present when the computer detects an inconsistency in the power supply to its sensors. **Special notes:** Use bornier **Elé. 1681** for all operations on the engine management computer connectors.

Sensor feed no. 1 is dedicated to the following components:
– fuel rail pressure sensor,
– gas recycling potentiometer,
– turbocharger pressure sensor,
– turbocharger position sensor.

Display parameter **PR215 Sensor power supply voltage no. 1**:
– If the voltage is less than **3.9 V** or greater than **4.1 V**, disconnect the sensors mentioned above one by one.

If, following disconnection, the voltage becomes normal again, replace the sensor concerned or repair the connection (wait a few seconds **between each disconnection** for the computer to make its measurement).
Clear the faults created by the multiple disconnections.
If, with sensors disconnected the voltage is still less than **3.9 V** or greater than **4.1 V**:
– check for **insulation against earth, continuity and the absence of interference resistance** on the following connection:

Injection computer **track B 98**
– Check the **insulation from + 5 V and + 12 V, continuity and absence of interference resistance** on the following connection:

Injection computer **track B 87**
– check for **+ 5 V** on **track B 98** of the injection computer and on each of its sensors.

If the fault is still present, check the computer connections.
If the fault is still present**, contact the Techline**.

AFTER REPAIR	Deal with any faults detected by the diagnostic tool. Clear the computer memory. Carry out a road test followed by another check with the **diagnostic tool**.

GETtheMANUALS.org

DF217 PRESENT OR STORED	SENSOR SUPPLY VOLTAGE No. 2 DEF: Open circuit or short circuit to sensor power supply earth

NOTES	**Conditions for applying the fault finding procedure to stored faults:** The fault is declared present when the computer detects an inconsistency in the power supply to its sensors.
	Special notes: Use bornier **Elé. 1681** for all operations on the engine management computer connectors.

Sensor supply no. 2 is dedicated to the following components:
– fuel temperature sensor,
– coolant temperature sensor,
– correction resistance of injectors 1 to 6.

If, with sensors disconnected, the voltage is still less than **3.9 V** or greater than **4.1 V** :
– Check the **insulation from + 5V and +12V, continuity and absence of interference resistance** on the following connection:

Injection computer **track B 95.**

If the fault is still present, check the computer connections.
If the fault is still present, contact the Techline.

AFTER REPAIR	Deal with any faults displayed by the diagnostic tool. Clear the computer memory. Carry out a road test followed by another check with the **diagnostic tool**.

GETtheMANUALS.org

DF218 PRESENT OR STORED	MICROCONTROLLER DEF: Internal electronic fault

NOTES	**Conditions for applying the fault finding procedure to stored faults:** The fault is declared present after: – the computer detects an internal electronic fault, – + after ignition feed on.

Clear the faults from memory and then start the engine.
Switch off the ignition and wait 40 seconds. Switch on + after ignition again. Check for present faults and deal with them. Clear the faults.
If the fault is still present, contact the Techline.

AFTER REPAIR	Deal with any faults displayed by the diagnostic tool. Clear the computer memory. Carry out a road test followed by another check with the **diagnostic tool**.

GETtheMANUALS.org

DF262 PRESENT OR STORED	HEATER PLUG GROUP NO. 1 CIRCUIT DEF: Row 1 heater plugs in CO.0

NOTES	**Conditions for applying the fault finding procedure to stored faults:** The fault is considered present if: – the voltage on the diagnostic line is greater than **4.7 V**.
	Special note: – run the **A C037 Preheating relay** command to check whether the relay is working. – use bornier **Elé. 1681** for all operations on the engine management computer connectors.

Check the condition of the **70 A** fuse for the rear preheating circuit. Replace it if necessary.
Check the **condition** of the supply lines **tracks 6, 4 and 2** between the preheating unit and the back row plugs and check their **insulation to earth** and their **continuity**. Repair if necessary.
Check the **condition** of preheating unit supply line **track 1** from the battery, and check its continuity. If everything is correct, replace the preheating unit.
Check the **condition** and **resistance** of the back row heater plugs. Replace the heater plugs if the **resistance** is greater than **30 Ω**.
Clear the fault memory and start the engine. **If the fault is still present**, contact the Techline.

AFTER REPAIR	Deal with any faults displayed by the diagnostic tool. Clear the computer memory. Carry out a road test followed by another check with the **diagnostic tool**.

GETtheMANUALS.org

DF263 PRESENT OR STORED	HEATER PLUG GROUP NO. 2 CIRCUIT DEF : Heater plugs row 2 in CO.0

NOTES	**Conditions for applying the fault finding procedure to stored faults:** The fault is considered present if: – the voltage on the diagnostic line is greater than **4.7 V**.
	Special note: – run the **A C037 Preheating relay** command to check whether the relay is working. – use bornier **Elé. 1681** for all operations on the engine management computer connectors.

Check the condition of the **70 A** fuse for the front preheating circuit. Replace it if necessary.
Check the **condition** of the supply lines **tracks 7, 5 and 3** between the preheating unit and the front row plugs and check their **insulation to earth** and their **continuity**. Repair if necessary.
Check the **condition** of the preheating unit supply line **track 1** from the battery, and check its continuity. If everything is correct, replace the preheating unit.
Check the **condition** and **resistance** of the front row heater plugs. Replace the heater plugs if the **resistance** is greater than **30 Ω**.
Clear the fault memory and start the engine. **If the fault is still present**, contact the Techline.

AFTER REPAIR	Deal with any faults displayed by the diagnostic tool. Clear the computer memory. Carry out a road test followed by another check with the **diagnostic tool**.

GETtheMANUALS.org

DF264 PRESENT OR STORED	POWER UNIT 1.DEF: Insulation fault on the injector power lines

NOTES	**Conditions for applying the fault finding procedure to stored faults:** The fault is considered present if: – the engine speed is greater than **500 rpm**, – the battery voltage is greater than **11 V**, – an insulation fault appears on the injector power lines.
	Special notes: Use bornier **Elé. 1681** for all operations on the engine management computer connectors.

Disconnect the connector from the Power Unit.

Check for **+ 12 V** on **track 1** of the **black connector** of the Power Unit.
Check for earth on **track 8** of the **black connector** of the Power Unit.
Repair or replace the Power Unit if necessary (see **MR 353, MR 402 or MR 361 Mechanical, 13B, Diesel Injection, Power computer**).

Check for **insulation against earth, continuity and the absence of interference resistance** on the following connection:

Diesel computer **track A 66** ⟶ Power Unit **grey connector, track 2**

Repair if necessary.

If the fault is still present, replace the Power Unit (see **MR 353, MR 402 or MR 361 Mechanical, 13B, Diesel injection, Power computer**).

Clear the fault memory and start the engine.
If the fault is still present, contact the Techline.

AFTER REPAIR	Deal with any faults displayed by the diagnostic tool. Clear the computer memory. Carry out a road test followed by another check with the **diagnostic tool**.

GETtheMANUALS.org

DF265 PRESENT OR STORED	INJECTOR NO. 1 DEF: Injector mechanical fault

NOTES	**Priority when dealing with a number of faults:** Deal with all other faults first if they are present or stored.
	Conditions for applying the fault finding procedure to stored faults: The fault is considered present if: – vehicle speed is zero, – engine speed is less than **850 rpm**, – the engine coolant temperature is greater than **70˚C**, – fault detection time is **10 seconds**.
	Special notes: Use bornier **Elé. 1681** for all operations on the engine management computer connectors.

With the engine stopped, disconnect the connector from injector 1.
Measure the **resistance** of the injector 1 coil between **tracks 1** and **2** of the injector connector. Replace the injector if it is in **short circuit (R = 0 Ω)** or in **open circuit (resistance measurement = infinity).** Otherwise, **reconnect injector no. 1**. If **the fault is still present**, apply **test 10 Poor injector operation**.
Clear the fault memory and start the engine. **If the fault is still present**, contact the Techline.

AFTER REPAIR	Deal with any faults displayed by the diagnostic tool. Clear the computer memory. Carry out a road test followed by another check with the **diagnostic tool**.

GETtheMANUALS.org

DF266 PRESENT OR STORED	INJECTOR No.2 DEF: Injector mechanical fault

NOTES	**Priority when dealing with a number of faults:** Deal with all other faults first if they are present or stored.
	Conditions for applying the fault finding procedure to stored faults: The fault is considered present if: – vehicle speed is zero, – engine speed is less than **850 rpm**, – the engine coolant temperature is greater than **70˚C**, – fault detection time is **10 seconds**.
	Special notes: Use bornier **Elé. 1681** for all operations on the engine management computer connectors.

With the engine stopped, disconnect the connector from injector 2.
Measure the **resistance** of injector 2 coil between **tracks 1** and **2** of the injector connector. Replace the injector if it is in **short circuit (R = 0 Ω)** or in **open circuit (resistance measurement = infinity).** Otherwise, **reconnect injector no. 2**. If **the fault is still present**, apply **test 10 Poor injector operation**.
Clear the fault memory and start the engine. **If the fault is still present**, contact the Techline.

AFTER REPAIR	Deal with any faults displayed by the diagnostic tool. Clear the computer memory. Carry out a road test followed by another check with the **diagnostic tool**.

GETtheMANUALS.org

DF267 PRESENT OR STORED	INJECTOR no. 3 DEF: Injector mechanical fault

NOTES	**Priority when dealing with a number of faults:** Deal with all other faults first if they are present or stored.
	Conditions for applying the fault finding procedure to stored faults: The fault is considered present if: – vehicle speed is zero, – engine speed is less than **850 rpm**, – the engine coolant temperature is greater than **70˚C**, – fault detection time is **10 seconds**.
	Special notes: Use bornier **Elé. 1681** for all operations on the engine management computer connectors.

With the engine stopped, disconnect the connector from injector 3.
Measure the **resistance** of the coil for injector 3 between **tracks 1** and **2** of the injector connector. Replace the injector if it is in **short circuit (R = 0 Ω)** or in **open circuit (resistance measurement = infinity).** Otherwise, **reconnect injector no. 3**. If **the fault is still present**, apply **test 10 Poor injector operation**.
Clear the fault memory and start the engine. **If the fault is still present**, contact the Techline.

AFTER REPAIR	Deal with any faults displayed by the diagnostic tool. Clear the computer memory. Carry out a road test followed by another check with the **diagnostic tool**.

GETtheMANUALS.org

DF268 PRESENT OR STORED	INJECTOR no. 4 DEF : Injector mechanical fault

NOTES	**Priority when dealing with a number of faults:** Deal with all other faults first if they are present or stored.
	Conditions for applying the fault finding procedure to stored faults: The fault is considered present if: – vehicle speed is zero, – engine speed is less than **850 rpm**, – the engine coolant temperature is greater than **70˚C**, – fault detection time is **10 seconds**.
	Special notes: Use bornier **Elé. 1681** for all operations on the engine management computer connectors.

With the engine stopped, disconnect the connector from injector 4.
Measure the **resistance** of the coil for injector 4 between **tracks 1** and **2** of the injector connector. Replace the injector if it is in **short circuit (R = 0 Ω)** or in **open circuit (resistance measurement = infinity).** Otherwise, **reconnect injector no. 4**. If **the fault is still present**, apply **test 10 Poor injector operation**.
Clear the fault memory and start the engine. **If the fault is still present**, contact the Techline.

AFTER REPAIR	Deal with any faults displayed by the diagnostic tool. Clear the computer memory. Carry out a road test followed by another check with the **diagnostic tool**.

GETtheMANUALS.org

DF269 PRESENT OR STORED	INJECTOR NO. 5 DEF: Injector mechanical fault

NOTES	**Priority when dealing with a number of faults:** Deal with all other faults first if they are present or stored.
	Conditions for applying the fault finding procedure to stored faults: The fault is considered present if: – vehicle speed is zero, – engine speed is less than **850 rpm**, – the engine coolant temperature is greater than **70˚C**, – fault detection time is **10 seconds**.
	Special notes: Use bornier **Elé. 1681** for all operations on the engine management computer connectors.

Engine stopped, disconnect the connector from injector 5.
Measure the **resistance** of the coil for injector 5 between **tracks 1** and **2** of the injector connector. Replace the injector if it is in **short circuit (R = 0 Ω)** or in **open circuit (resistance measurement = infinity).** Otherwise, **reconnect injector no. 5**. If **the fault is still present**, apply **test 10 Poor injector operation**.
Clear the fault memory and start the engine. **If the fault is still present**, contact the Techline.

AFTER REPAIR	Deal with any faults displayed by the diagnostic tool. Clear the computer memory. Carry out a road test followed by another check with the **diagnostic tool**.

GETtheMANUALS.org

DF270 PRESENT OR STORED	INJECTOR NO. 6 DEF: Injector mechanical fault

NOTES	**Priority when dealing with a number of faults:** Deal with all other faults first if they are present or stored.
	Conditions for applying the fault finding procedure to stored faults: The fault is considered present if: – vehicle speed is zero, – engine speed is less than **850 rpm**, – the engine coolant temperature is greater than **70˚C**, – fault detection time is **10 seconds**.
	Special notes: Use bornier **Elé. 1681** for all operations on the engine management computer connectors.

With the engine stopped, disconnect the connector from injector ?6?.
Measure the **resistance** of the coil for injector 6 between **tracks 1** and **2** of the injector connector. Replace the injector if it is in **short circuit (R = 0 Ω)** or in **open circuit (resistance measurement = infinity).** Otherwise, **reconnect injector no. 6**. If **the fault is still present**, apply **test 10 Poor injector operation**.
Clear the fault memory and start the engine. **If the fault is still present**, contact the Techline.

AFTER REPAIR	Deal with any faults displayed by the diagnostic tool. Clear the computer memory. Carry out a road test followed by another check with the **diagnostic tool**.

GETtheMANUALS.org

DF324 PRESENT OR STORED	OBD AIR TEMPERATURE SENSOR CIRCUIT CC.1: Short circuit to + 12 V CO.0: Open circuit or short circuit to earth

NOTES	**Special notes:** Use bornier **Elé. 1681** for all operations on the engine management computer connectors. **Does not involve the air inlet temperature sensor.** **ONLY FOR VDIAG 08 AND 0C**

CC.1	***NOTES***	**Conditions for applying the fault finding procedure to stored faults:** The fault is declared present if the sensor voltage is greater than **4.9 V**.

Manipulate the wiring harness between the diesel computer and the OBD air temperature sensor to detect a change of status (present ´ stored).
Look for possible damage to the harness, and check the **connection** and **the condition** of the OBD air temperature sensor and its connections.
Repair if necessary.

Check for **the continuity, the absence of interference resistance and insulation against + 5 V and + 12 V** on the following connections:

Diesel computer **track B 109** ⟶ **track 1** of the OBD air temperature sensor

If the fault is still present, check **the connection** and **condition** of **intermediate connector R115**.
Repair if necessary.

Measure the **resistance** between **tracks 1** and **3** of the OBD air temperature sensor.
Replace the sensor if the **resistance** is not:
5516 ± 400 Ω at 0˚C
3728 ± 300 Ω at 10˚C
2515 ± 200 Ω at 20˚C

If the fault is still present, apply **test 5 Air flowmeter**.
Repair if necessary.
If the fault is still present, apply **test 4 Checking the turbocharging and air inlet circuit**.
Repair if necessary.
If the fault is still present, contact the Techline.

AFTER REPAIR	Deal with any faults displayed by the diagnostic tool. Clear the computer memory. Carry out a road test followed by another check with the **diagnostic tool**.

GETtheMANUALS.org

DF324 **CONTINUED**	

CO.0	***NOTES***	**Conditions for applying the fault finding procedure to stored faults:** The fault is declared present if the sensor voltage is less than **0.12 V**.

Manipulate the wiring harness between the diesel computer and the OBD air temperature sensor to detect a change of status (present ↔ stored).
Look for possible damage to the harness, and check **the connection and the condition** of the OBD air temperature sensor and its connections.
Repair if necessary.

Check the **insulation against earth, continuity and the absence of interference resistance** on the following connection:

Diesel computer **track B 109** ⟶ **track 1** of the OBD air temperature sensor

If the fault is still present, check **the connection** and **condition** of **intermediate connector R115**.
Repair if necessary.

Check the **continuity and lack of interference resistance** of the connection:

Diesel computer **track A 11** ⟶ **track 3** of the OBD air temperature sensor

Repair if necessary.

Measure the **resistance** between **tracks 1** and **3** of the OBD air temperature sensor.
Replace the sensor if the **resistance** is not:
5516 ± 400 Ω at 0˚C
3728 ± 300 Ω at 10˚C
2515 ± 200 Ω at 20˚C

If the fault is still present, contact the Techline.

AFTER REPAIR	Deal with any faults displayed by the diagnostic tool. Clear the computer memory. Carry out a road test followed by another check with the **diagnostic tool**.

GETtheMANUALS.org

DF325 PRESENT OR STORED	EXHAUST GAS RECIRCULATION FUNCTION CC.1: Short circuit to + 12 V CO.0: Open circuit or short circuit to earth 1.DEF: Excessive EGR valve flow 2.DEF: Insufficient EGR valve flow 3.DEF: EGR valve position feedback loop error

NOTES	**Special notes:** Use bornier **Elé. 1681** for all operations on the engine management computer connectors.

CC.1	***NOTES***	**Conditions for applying the fault finding procedure to stored faults:** The fault is considered present if: – inconsistency with the EGR valve control voltage when it is operated, – the battery voltage is too low.

Manipulate the wiring harness between the diesel computer and the EGR valve to detect a change in status (present ⇔ stored).
Look for possible damage to the harness, and check **the connections and condition** of the EGR valve and its connections.
Repair if necessary.

Check the **insulation from + 5V and +12 V, continuity and absence of interference resistance** on the following connection:

Diesel computer **track B 115** → **track 4** of the EGR valve

Diesel computer **track B 87** → **track 2** of the EGR valve

Repair if necessary.

Measure the **resistance** of the EGR valve between **tracks 4** and **5**.
Replace the EGR valve if the resistance is not **6.8 ± 0.5 Ω at 20˚C**.
Measure the **resistance** of the EGR valve between **tracks 2** and **3**.
Replace the EGR valve if the resistance is not **5 ± 0.5 kΩ at 20˚C**.
(see **MR 353, MR 402 Mechanical, 12A, Fuel mixture, Exhaust gas recirculation valve**).

If the fault is still present, contact the Techline.

AFTER REPAIR	Deal with any faults displayed by the diagnostic tool. Clear the computer memory. Carry out a road test followed by another check with the **diagnostic tool**.

GETtheMANUALS.org

DF325 **CONTINUED 1**	

CO.0	***NOTES***	**Conditions for applying the fault finding procedure to stored faults:** The fault is considered present if: – with the engine running, – the battery voltage is too low.

Manipulate the wiring harness between the diesel computer and the EGR valve to detect a change in status (present ↔ stored).
Look for possible damage to the harness, and check **the connections and condition** of the EGR valve and its connections.
Repair if necessary.

Check the **insulation against earth, continuity and the absence of interference resistance** on the following connection:

Diesel computer **track B 115** ⟶ **track 4** of the EGR valve

Repair if necessary.

Measure the **resistance** of the EGR valve between **tracks 4** and **5**.
Replace the EGR valve if the resistance is not **6.8 ± 0.5 Ω at 20˚C**.
Measure the **resistance** of the EGR valve between **tracks 2** and **3**.
Replace the EGR valve if the resistance is not **5 ± 0.5 kΩ at 20˚C**.
(see **MR 353, MR 402 Mechanical, 12A, Fuel mixture, Exhaust gas recirculation valve**).

Check the **continuity and absence of interference resistance** of the connections::

Main relay **track 13** ⟶ **track 5** of the EGR valve

Diesel computer **tracks A 1** and **A 2** ⟶ **track 5** of the EGR valve

Ensure the presence of **+ 12 V** on **track A 1**
If the fault is still present, check **intermediate connector R 115** on **track 2**.
Repair if necessary.

If the fault is still present, contact the Techline.

AFTER REPAIR	Deal with any faults displayed by the diagnostic tool. Clear the computer memory. Carry out a road test followed by another check with the **diagnostic tool**.

GETtheMANUALS.org

DF325 **CONTINUED 2**	

1.DEF ***2.DEF***	***NOTES***	**Conditions for applying the fault finding procedure to stored faults:** The fault is declared present: – speed loop error less than **150 rpm**. – vehicle speed between **27 mph (45 km/h)** and **33 mph (55 km/h)**. – detection time **11 seconds**. – air intake temperature between **20** and **75˚C**, – if **1.DEF**: The difference between the EGR valve opening cyclic ratio and the EGR opening cyclic ratio setpoint is **greater than 20%**. – if **2.DEF**: The difference between the EGR valve opening cyclic ratio and the EGR valve opening cyclic ratio setpoint is **less than 29%**.
3.DEF		**Conditions for applying the fault finding procedure to stored faults:** The fault is declared present: – with the engine running, – engine speed greater than **1700 rpm**, – detection time **11 seconds**. – engine coolant temperature between **70** and **100˚C**, – the recorded value of the EGR valve position and the estimated value of the EGR valve position is greater than **1 mm**, – the estimated value of the EGR valve position and the recorded value of the EGR valve position is greater than **4 mm**.

Manipulate the wiring harness between the diesel computer and the EGR valve to detect a change in status (present ↔ stored).
Look for possible damage to the harness, and check **the connections and condition** of the EGR valve and its connections.
Repair if necessary.

AFTER REPAIR	Deal with any faults displayed by the diagnostic tool. Clear the computer memory. Carry out a road test followed by another check with the **diagnostic tool**.

GETtheMANUALS.org

DF325 **CONTINUED 3**	

Check that the EGR valve inlet duct and the inlet tracts on the manifold are not damaged (cracked manifold, pierced hoses), blocked or pinched. Check the extent of clogging of the EGR valve. Repair if necessary.
Clear the fault memory and start the engine. Repeat fault finding with the diagnostic tool. If the fault reappears, replace the EGR valve (see **MR 353, MR 402 or MR 361 Mechanical, 12A, Fuel mixture, Inlet manifold**).
If the fault is still present, contact the Techline.

AFTER REPAIR	Deal with any faults displayed by the diagnostic tool. Clear the computer memory. Carry out a road test followed by another check with the **diagnostic tool**.

GETtheMANUALS.org

DF374 PRESENT OR STORED	COMPUTER 1.DEF: Memory self-test

NOTES	**Conditions for applying the fault finding procedure to stored faults:** The fault is declared present if the computer detects an internal electrical malfunction.
	Special notes: Use bornier **Elé. 1621** for all operations on the engine management computer connectors.

If the fault is **stored** or **present**, clear the fault from the computer memory.
Switch off the ignition, wait **40 s**, then switch the ignition on again and re-establish dialogue.

If the fault is still present, contact the Techline.

AFTER REPAIR	Deal with any faults displayed by the diagnostic tool. Clear the computer memory. Carry out a road test followed by another check with the **diagnostic tool**.

GETtheMANUALS.org

DF767 PRESENT OR STORED	POWER UNIT 1.DEF: Loss of EDU power supply, injector control line CC.0 or CC.1

NOTES	**Conditions for applying the fault finding procedure to stored faults:** The fault is considered present if: – the engine speed is greater than **500 rpm**, – the battery voltage is greater than **11 V**, – the Power Unit loses its power supply, – or its injector control lines are short circuited to **earth** or to **+12 V**.
	Special notes: Use bornier **Elé. 1681** for all operations on the engine management computer connectors.

Manipulate the wiring harness between the diesel computer and the Power Unit* to detect a change in status (present ↔ stored).
Look for possible damage to the harness, and check **the condition and connection** of the Power Unit and its connections.
Repair if necessary.

Check the **insulation from earth, continuity and the absence of interference resistance** on the following connections:

Diesel computer **track A 46** → **track 3** of the Power Unit
Diesel computer **track A 65** → **track 4** of the Power Unit
Diesel computer **track A 45** → **track 5** of the Power Unit
Diesel computer **track A 64** → **track 6** of the Power Unit
Diesel computer **track A 44** → **track 7** of the Power Unit
Diesel computer **track A 63** → **track 8** of the Power Unit

Repair if necessary.

AFTER REPAIR	Deal with any faults displayed by the diagnostic tool. Clear the computer memory. Carry out a road test followed by another check with the **diagnostic tool**.

GETtheMANUALS.org

DF767 **CONTINUED**	

Check the **supply** of power to the Power Unit terminals. With the ignition on, check for **+ 12 V** on **track A 1** in contact and **track 1** of the Power Unit. Repair if necessary.
Check the **continuity, insulation from + 12 V and the absence of interference resistance** for the following connection: Diesel computer **track A 66** ⟶ **track 2** of the Power Unit Repair if necessary.
If the fault is still present, replace the Power Unit (see **MR 353, MR 402 or MR 361 Mechanical, 13B, Diesel injection, Power computer**).
Clear the fault memory and start the engine. **If the fault is still present**, contact the Techline.

AFTER REPAIR	Deal with any faults displayed by the diagnostic tool. Clear the computer memory. Carry out a road test followed by another check with the **diagnostic tool**.

GETtheMANUALS.org

DF768 PRESENT OR STORED	POWER UNIT 1.DEF: The diesel computer detects low power consumption by the Power Unit

NOTES	**Conditions for applying the fault finding procedure to stored faults:** The fault is declared present: – if the diesel computer detects a low power consumption by the Power Unit, – at engine speeds above **500 rpm**, – If the battery voltage is greater than **11 V**; **Special notes:** Use bornier **Elé. 1681** for all operations on the engine management computer connectors.

Manipulate the wiring harness between the diesel computer and the Power Unit to detect a change in status (present ↔ stored).
Look for possible damage to the harness, and check **the condition and connection** of the Power Unit connector and its connections.
Repair if necessary.

Check the **insulation and continuity** of the following connections:

Power Unit **track 1**	→	**track 4** of injectors no. 1 to 6
Power unit **track 7**	→	**track 3** of injectors no. 1
Power unit **track 6**	→	**track 3** of injectors no. 2
Power unit **track 5**	→	**track 3** of injectors no. 3
Power unit **track 4**	→	**track 3** of injectors no. 4
Power unit **track 3**	→	**track 3** of injectors no. 5
Power unit **track 2**	→	**track 3** of injectors no. 6

Power Unit = Injector control unit.
Repair if necessary.
If the connections are correct and the fault is still present, replace the Power Unit (see **MR 353, MR 402 or MR 361 Mechanical, 13B, Diesel injection, Power computer**).

Clear the fault memory and start the engine.
If the fault is still present, contact the Techline.

AFTER REPAIR	Deal with any faults displayed by the diagnostic tool. Clear the computer memory. Carry out a road test followed by another check with the **diagnostic tool**.

GETtheMANUALS.org

DF769 PRESENT OR STORED	OIL TEMPERATURE 1.DEF: Above maximum threshold

NOTES	**Conditions for applying the fault finding procedure to stored faults:** The fault is declared present if the temperature is greater than **123˚C**.
	Special notes: Use bornier **Elé. 1681** for all operations on the engine management computer connectors.

Manipulate the wiring harness between the diesel computer and the oil temperature sensor to detect a change of status (present ⇔ stored).
Look for possible damage to the harness, and check **the connection and the condition** of the oil temperature sensor and its connections.
Repair if necessary.

Measure the **resistance** between tracks **1** and **2** of the oil temperature sensor.
Replace the sensor if the **resistance** is not:
16100 ± 400 Ω at - 10˚C
9200 ± 300 Ω at 0˚C
3515 ± 200 Ω at 20˚C
1500 ± 100 Ω at 40˚C

If the fault is still present, check the engine cooling circuit (see **MR 353, MR 402 or MR 361 Mechanical, 19A, Cooling, Checks**).
Repair or replace the faulty components, if necessary.

If the fault is still present, contact the Techline.

GETtheMANUALS.org

NOTES	Only check conformity after a full check with the **diagnostic tool**. The values shown in this conformity check are given as a guide. **Test conditions: engine stopped, ignition on.**

MAIN SCREEN

Order	Function	Parameter or Status Check or Action	Display and notes	Fault finding
1	**Impact detected**	**ET077:** Impact detected	**NO**	If **YES**, switch off the ignition for **40 seconds**, then switch it back on so the engine can be restarted. Then clear any faults.
2	**Engine speed**	**PR145:** Engine speed	**Gives the engine's rotational speed in rpm. 0 rpm**	In the event of a fault apply the interpretation for **DF154 Flywheel signal sensor circuit**.
3	**Vehicle speed**	**PR155:** Vehicle speed	**Gives the vehicle speed in mph (km/h). 0 mph**	**Perform a fault finding procedure on the ABS computer.**
4	**Main relay**	**ET133:** Main relay control	**ACTIVE**	In the event of a fault, apply the interpretation of **DF015 Main relay control circuit**.
5	**Connection**	**ET226:** Injection/ multiplex network connection	**VALID**	In the event of a fault, test the multiplex network. Clear the faults.
6	**Computer feed voltage**	**PR071:** Computer feed voltage	**11 V < PR071 < 15 V**	In the event of a fault, apply the interpretation of fault **DF175 Supply**.
7	**Sensor supply voltages**	**PR215:** Sensor feed voltage no. 1	**4.9 V ± 0.1 V**	If only one gang responds after the pedal is depressed, change the pedal sensor. If the voltages measured do not correspond to ± **0.5 V**, replace the pedal sensor.

GETtheMANUALS.org

NOTES	Only check conformity after a full check with the **diagnostic tool**. The values shown in this conformity check are given as a guide. **Test conditions: engine stopped, ignition on.**

MAIN SCREEN (continued 1)

Order	Function	Parameter or Status Check or Action		Display and notes	Fault finding
8	Pressure	**PR035:**	Atmospheric pressure	**Gives the atmospheric pressure in mbar.**	In the event of a fault, apply the interpretation for **DF003 Atmospheric pressure sensor circuit**.
9		**PR038:**	Rail pressure	**0 bar**	In the event of a fault, apply interpretation of fault **DF208 Fuel pressure solenoid valve circuit**.
10	Temperature	**PR058:**	Air temperature	Check the values displayed by the sensors by referring to the "Glossary". **PR058 ≈ PR064 ≈ PR066 with engine cold**	In the event of a fault, apply the interpretation of faults **DF039 Air inlet temperature sensor circuit** (Vdiag 04, 08 only) **and DF324 OBD air temperature sensor circuit** (Vdiag 0C only).
11		**PR064:**	Coolant temperature		If there is a fault use the interpretation for **DF001 Coolant temperature sensor circuit**.
12		**PR066:**	Oil temperature (Vdiag OC only)		**In the event of a fault, apply the interpretation of the DF769 "Oil temperature"** (Vdiag 0C only).

GETtheMANUALS.org

NOTES	Only check conformity after a full check with the **diagnostic tool**. The values shown in this conformity check are given as a guide. **Test conditions: engine stopped, ignition on.**

MAIN SCREEN (continued 2)

Order	Function	Parameter or Status Check or Action	Display and notes	Fault finding
13	**Injection fault**	**ET028:** Level 1 fault warning light request	**INACTIVE** **Warning light controlled by the engine injection computer: Allocated via the multiplex network.**	In the event of a fault with the interpretation of statuses **ET028 Injection fault warning light request**, and/or **ET029 Serious injection fault warning light request**, ensure no faults are present. If the fault is still present run fault finding on the instrument panel.
14		**ET029:** Level 2 fault warning light request		
15	**OBD fault**	**ET148:** OBD warning light activation request	**INACTIVE** **Warning light controlled by the engine injection computer: Allocated via the multiplex network.**	In the event of a fault with the interpretation of status **ET148 OBD warning light activation request** ensure no faults are present. If the fault is still present run fault finding on the instrument panel.

GETtheMANUALS.org

NOTES	Only check conformity after a full check with the **diagnostic tool**. The values shown in this conformity check are given as a guide. **Test conditions: engine stopped, ignition on.**

AIR CIRCUIT (TURBO/INLET)

Order	Function	Parameter or Status Check or Action		Display and notes	Fault finding
1	**Engine speed**	**PR145:**	Engine speed	**Gives the engine's rotational speed in rpm. 0 rpm**	In the event of a fault apply the interpretation for **DF154 Flywheel signal sensor circuit**.
2	**Air temperature**	**PR058:**	Air temperature	**- 40 ˚C < X < 120 ˚C**	In the event of a fault, apply the interpretation of faults **DF039 Air inlet temperature sensor circuit** (Vdiag 04, 08 only) **and DF324 OBD air temperature sensor circuit** (Vdiag 0C only).
3	**Pressure**	**PR035:**	Atmospheric pressure	**990 < X < 1030 mbar**	In the event of a fault, apply the interpretation for **DF003 Atmospheric pressure sensor circuit**.
4		**PR041:**	Turbocharging pressure	**PR041 = PR035**	In the event of a fault, apply the interpretation of **DF055 Turbocharging pressure regulation circuit**.
5	**Turbocharger**	**PR346:**	Turbocharger wastegate valve position	**1.64 ± 0.1 mm**	
6	**Pressure**	**PR008:**	Rail pressure setpoint	**PR008 = 400 bar PR038 = 0 bar PR213 = PR038 - PR008**	In the event of a fault, apply the interpretation of **DF208 "Fuel pressure solenoid valve circuit", or "DF197 Fuel pressure signal"**.
7		**PR038:**	Rail pressure		
8		**PR213:**	Rail pressure loop difference		
9	**Air flow**	**PR146:**	Inlet air flow	**0 kg per hour**	In the event of a fault, apply the interpretation of **DF056 Air flow sensor circuit**.

GETtheMANUALS.org

NOTES	Only check conformity after a full check with the **diagnostic tool**. The values shown in this conformity check are given as a guide. **Test conditions: engine stopped, ignition on.**

AIR CIRCUIT (TURBO/INLET) (CONTINUED)

Order	Function	Parameter or Status Check or Action		Display and notes	Fault finding
10	**Sensor voltage**	**PR083:**	Air temperature sensor voltage	**2.9 ± 0.1 V at 20 ˚C**	In the event of a fault, apply the interpretation of faults **DF039 Air inlet temperature sensor circuit** (Vdiag 04, 08 only) **and DF324 OBD air temperature sensor circuit** (Vdiag 0C only).
11		**PR079:**	Atmospheric pressure sensor voltage	**4 ± 0.1 V at 20 ˚C**	In the event of a fault, apply the interpretation for **DF003 Atmospheric pressure sensor circuit**.
12		**PR215:**	Sensor feed voltage no. 1	**4.9 ± 0.1 V at 20 ˚C**	If only one gang responds after the pedal is depressed, change the pedal sensor. If the voltages measured do not correspond to ± **0.5 V**, replace the pedal sensor.
13		**PR224:**	Turbocharging pressure sensor voltage	**1.95 ± 0.05 V at 20 ˚C**	In the event of a fault, apply the interpretation of **DF055 Turbocharging pressure regulation circuit**.
14		**PR345:**	Turbocharger wastegate potentiometer voltage	**3.9 ± 0.1 V at 20 ˚C**	
15		**PR225:**	Air flow sensor voltage	**0.9 ± 0.1 V at 20 ˚C**	In the event of a fault, apply the interpretation of **DF056 Air flow sensor circuit**.

GETtheMANUALS.org

NOTES	Only check conformity after a full check with the **diagnostic tool**. The values shown in this conformity check are given as a guide. **Test conditions: engine stopped, ignition on.**

FUEL CIRCUIT

Order	Function	Parameter or Status Check or Action		Display and notes	Fault finding
1	**Engine speed**	**PR145:**	Engine speed	**Gives the engine's rotational speed in rpm. 0 rpm**	In the event of a fault apply the interpretation for **DF154 Flywheel signal sensor circuit**.
2	**Fuel temperature**	**PR063:**	Fuel temperature	**- 40 ˚C < X < 120 ˚C**	In the event of a fault, apply the interpretation of **DF098 Fuel temperature sensor circuit**.
3	**Pressure**	**PR008:**	Rail pressure setpoint	**400 bar**	In the event of a fault, apply the interpretation of **DF208 "Fuel pressure solenoid valve circuit", or "DF197 Fuel pressure signal"**.
4		**PR038:**	Rail pressure	**0 bar**	
5		**PR213:**	Rail pressure loop difference	**PR213 = PR008 - PR213**	
6	**Turbocharger**	**PR346:**	Turbocharger wastegate valve position	**1.64 ± 0.1 mm**	In the event of a fault, apply the interpretation of **DF055 Turbocharging pressure regulation circuit**.
7	**Fuel flow**	**PR017:**	Fuel flow	**- 30 mm^3/stroke**	In the event of a fault, apply the interpretation of **DF197 Fuel pressure signal**.
8	**Duration of injection**	**PR101:**	Duration of injection	**0 ms**	
9	**Sensor voltage**	**PR082:**	Fuel temperature sensor voltage	**3.9 ± 0.1 V at 20 ˚C**	In the event of a fault, apply the interpretation of **DF098 Fuel temperature sensor circuit**.
10		**PR223:**	Fuel pressure sensor voltage	**0.5 V < X < 1.5 V**	In the event of a fault, apply the interpretation of **DF208 Fuel pressure signal** and **DF197 Fuel pressure solenoid valve circuit**.

GETtheMANUALS.org

NOTES	Only check conformity after a full check with the **diagnostic tool**. The values shown in this conformity check are given as a guide. **Test conditions: engine stopped, ignition on.**

FUEL CIRCUIT (continued)

Order	Function	Parameter or Status Check or Action		Display and notes	Fault finding
11	**Turbocharger potentiometer voltage**	**PR345:**	Turbocharger wastegate potentiometer voltage	**3.9 ± 0.1 V at 20 ˚C**	In the event of a fault, apply the interpretation of **DF055 Turbocharging pressure regulation circuit**.
12	**Fuel flow correction** (except for VELSATIS Vdiag 04)	**PR364:**	Cylinder no. 1 fuel flow correction	**± 1 mm^3/stroke**	If inconsistency, perform a check using **test 10 INCORRECT INJECTOR OPERATION**.
13		**PR405:**	Cylinder no. 2 fuel flow correction		
14		**PR406:**	Cylinder no. 3 fuel flow correction		
15		**PR365:**	Cylinder no. 4 fuel flow correction		
16		**PR407:**	Cylinder no. 5 fuel flow correction		
17		**PR408:**	Cylinder no. 6 fuel flow correction		

GETtheMANUALS.org

NOTES	Only check conformity after a full check with the **diagnostic tool**. The values shown in this conformity check are given as a guide. **Test conditions: engine stopped, ignition on.**

ANTI POLLUTION/OBD

Order	Function	Parameter or Status Check or Action		Display and notes	Fault finding
1	**Engine speed**	**PR145:**	Engine speed	**Gives the engine's rotational speed in rpm. 0 rpm**	In the event of a fault apply the interpretation for **DF154 Flywheel signal sensor circuit**.
2	**EGR valve**	**PR136:**	EGR position	**0 ± 0.1 mm**	In the event of a fault, apply the interpretation of **DF209 EGR valve position sensor circuit**.
3		**PR160:**	EGR potentiometer voltage	**PR160 = 4 ± 0.1 V at PR136 = 0 ± 0.1 mm**	
4	**Air flow**	**PR146:**	Inlet air flow	**0 kg per hour**	In the event of a fault, apply the interpretation of **DF056 Air flow sensor circuit**.
5		**PR225:**	Air flow sensor voltage	**0.9 ± 0.1 V at 20 °C**	
6	**Combustion misfiring** (except for VELSATIS Vdiag 04)	**ET057:**	Misfiring on cylinder 1	**NOT DETECTED**	If inconsistency, perform a check using **test 10 INCORRECT INJECTOR OPERATION**. **IMPORTANT** To reinitialise this status, use **RZ007 Fault memory**.
7		**ET058:**	Misfiring on cylinder 2		
8		**ET059:**	Misfiring on cylinder 3		
9		**ET060:**	Misfiring on cylinder 4		
10		**ET061:**	Misfires in cylinder 5		
11		**ET062:**	Misfires in cylinder 6		
12	**OBD fault**	**ET148:**	OBD warning light activation request	**INACTIVE Warning light controlled by the engine injection computer: Allocated via the multiplex network.**	In the event of a fault with the interpretation of status **ET148 OBD warning light activation request** ensure no faults are present. If the fault is still present run fault finding on the instrument panel.

GETtheMANUALS.org

NOTES	Only check conformity after a full check with the **diagnostic tool**. The values shown in this conformity check are given as a guide. **Test conditions: engine stopped, ignition on.**

DRIVER PARAMETERS

Order	Function	Parameter or Status Check or Action		Display and notes	Fault finding
1	**Engine speed**	**PR145:**	Engine speed	**Gives the engine's rotational speed in rpm. 0 rpm**	In the event of a fault apply the interpretation for **DF154 Flywheel signal sensor circuit**.
2	**Accelerator pedal**	**PR030:**	Accelerator pedal position	**0 %**	If only one gang responds after the pedal is depressed, change the pedal sensor. If the voltages measured do not correspond to ± **0.5 V**, replace the pedal sensor.
3		**PR147:**	Pedal potentiometer voltage gang 1	**No load: PR147 = 0.7 ± 0.1 V Full load: PR147 = 4.5 ± 0.1 V**	
4		**PR148:**	Pedal potentiometer voltage gang 2	**No load: PR148 = 0.35 ± 0.1 V Full load: PR148 = 2.2 ± 0.1 V**	
5		**PR342:**	Pedal sensor power supply gang 1	**4.9 ± 0.1 V**	
6	**Voltage**	**PR215:**	Sensor feed voltage no. 1	**4.9 ± 0.1 V**	
7	**Brake pedal**	**ET012:**	Primary brake contact	**RELEASED**	In the event of a fault, refer to the interpretation of status **ET012** Primary brake contact
8		**ET013:**	Secondary brake contact	**RELEASED**	In the event of a fault, refer to the interpretation of status **ET013** Secondary brake contact

GETtheMANUALS.org

NOTES	Only check conformity after a full check with the **diagnostic tool**. The values shown in this conformity check are given as a guide. **Test conditions: engine stopped, ignition on.**

IGNITION/PREHEATING

Order	Function	Parameter or Status Check or Action		Display and notes	Fault finding
1	**Engine**	**ET038:**	Engine (except for VELSATIS Vdiag 04)	**NORMAL**	If status **ET038** is **STATUS 1**, carry out a conformity check using the **Emission control/ OBD** function.
2	**Engine speed**	**PR145:**	Engine speed	**Gives the engine's rotational speed in rpm. 0 rpm**	In the event of a fault apply the interpretation for **DF154 Flywheel signal sensor circuit**.
3	**Temperature**	**PR064:**	Coolant temperature	Check the values displayed by the sensors by referring to the "Glossary" section. **PR064 = PR058**	If there is a fault use the interpretation for **DF001 Coolant temperature sensor circuit**.
4		**PR058:**	Air temperature		In the event of a fault, apply the interpretation of faults **DF039 Air inlet temperature sensor circuit** (Vdiag 04, 08 only) **and DF324 OBD air temperature sensor circuit** (Vdiag 0C only).
5	**Preheating**	**PR176:**	Preheating phase	**0 < X < 30 s**	In the event of a fault, refer to the interpretation of **ET134 Pre/postheating relay control**.
6		**ET134:**	Pre-postheating relay control	**ACTIVE** during the preheating phase, then **INACTIVE**	
7		**ET204:**	Control for preheating warning light	**ACTIVE** during the preheating phase, then **INACTIVE**	If there is a fault, consult the interpretation of status **ET204 Preheating warning light control**.
8	**Computer feed voltage**	**PR071:**	Computer feed voltage	**11 V < X < 15 V**	In the event of a fault, apply the interpretation of fault **DF175 Supply**.

GETtheMANUALS.org

NOTES	Only check conformity after a full check with the **diagnostic tool**. The values shown in this conformity check are given as a guide. **Test conditions: engine stopped, ignition on.**

ENGINE COOLING

Order	Function	Parameter or Status Check or Action		Display and notes	Fault finding
1	Temperature	**PR058:**	Air temperature	Check the values displayed by the sensors by referring to the "Glossary". **PR058 ≈ PR064 ≈ PR066 ≈ PR063 with engine cold**	In the event of a fault, apply the interpretation of faults **DF039 Air inlet temperature sensor circuit** (Vdiag 04, 08 only) **and DF324 OBD air temperature sensor circuit** (Vdiag 0C only).
2		**PR064:**	Coolant temperature		If there is a fault use the interpretation for **DF001 Coolant temperature sensor circuit**.
3		**PR066:**	Oil temperature		In the event of a fault, apply the interpretation of the **DF769 Oil temperature** (Vdiag 0C only).
4		**PR063:**	Fuel temperature		In the event of a fault, apply the interpretation of **DF098 Fuel temperature sensor circuit**.
5	**Antipercolation device**	**ET273:**	Anti-percolation	**INACTIVE**	In the event of a fault, refer to the interpretation of status **ET273** Anti-percolation
6	**Motor-driven fan assembly**	**ET143:**	Low speed fan assembly relay control	**INACTIVE without air conditioning and PR064 < 96 ˚C**	In the event of a fault, refer to the interpretation of **ET143 Low speed fan relay control**.
7		**ET144:**	High-speed fan assembly relay control	**INACTIVE and PR064 < 99 ˚C**	In the event of a fault, refer to the interpretation of **ET144 High speed fan relay control**.

GETtheMANUALS.org

NOTES	Only check conformity after a full check with the **diagnostic tool**. The values shown in this conformity check are given as a guide. **Test conditions: engine stopped, ignition on.**

ENGINE COOLING (CONTINUED)

Order	Function	Parameter or Status Check or Action		Display and notes	Fault finding
8	**Sensor voltage**	**PR083:**	Air temperature sensor voltage	Check the values displayed by the sensors by referring to the "Glossary". **PR083 ≈ PR084 ≈ PR085 ≈ PR082 ≈ 3.5 ± 0.5 V at 20 ˚C**	In the event of a fault, apply the interpretation of faults **DF039 Air inlet temperature sensor circuit** (Vdiag 04, 08 only) **and DF324 OBD air temperature sensor circuit** (Vdiag 0C only).
9		**PR084:**	Coolant temperature sensor voltage		If there is a fault use the interpretation for **DF001 Coolant temperature sensor circuit**.
10		**PR085:**	Oil temperature sensor voltage		In the event of a fault, apply the interpretation of **DF058 Oil temperature sensor circuit** (Vdiag 0C only).
11		**PR082:**	Fuel temperature sensor voltage		In the event of a fault, apply the interpretation of **DF098 Fuel temperature sensor circuit**.
12	**Coolant temperature warning light**	**ET027:**	Coolant temperature warning light request	**INACTIVE**	**In the event of a fault with interpretation of ET027 "Coolant temperature warning light request",** run fault finding on the instrument panel.

GETtheMANUALS.org

NOTES	Only check conformity after a full check with the **diagnostic tool**. The values shown in this conformity check are given as a guide. **Test conditions: engine stopped, ignition on.**

HEATING

Order	Function	Parameter or Status Check or Action		Display and notes	Fault finding
1	**Coolant temperature**	**PR064:**	Coolant temperature	**- 40 ˚C < X < 120 ˚C**	If there is a fault use the interpretation for **DF001 Coolant temperature sensor circuit**.
2	**Heating element**	**ET276:**	Heating element	**WITH (depending on vehicle configuration)**	In the event of a fault, apply the interpretation of **ET276 Heating elements**.
3	**Sensor voltage**	**PR084:**	Coolant temperature sensor voltage	**3.95 ± 0.1 V at 20 ˚C**	If there is a fault use the interpretation for **DF001 Coolant temperature sensor circuit**.
4	**Heating element**	**ET205:**	Heating element no. 1 relay control	**INACTIVE at 20 ˚C**	In the event of a fault, apply the interpretation of **ET205 Heating element no. 1 relay control**.
5		**ET206:**	Heating element no. 2 relay control	**INACTIVE at 20 ˚C**	In the event of a fault, apply the interpretation of **ET206 Heating element no. 2 relay control**.
6		**ET207:**	Heating element no. 3 relay control	**INACTIVE at 20 ˚C**	In the event of a fault, apply the interpretation of **ET207 Heating element no. 3 relay control**.

GETtheMANUALS.org

NOTES	Only check conformity after a full check with the **diagnostic tool**. The values shown in this conformity check are given as a guide. **Test conditions: engine stopped, ignition on.**

CRUISE CONTROL/SPEED LIMITER

Order	Function	Parameter or Status Check or Action		Display and notes	Fault finding
1	**Vehicle speed**	**PR155:**	Vehicle speed	**Gives the vehicle speed in mph (km/h). 0 mph**	**Perform a fault finding procedure on the ABS computer.**
2	**Cruise control/ speed limiter**	**PR130:**	Cruise control setpoint	**0 mph**	In the event of a fault, apply the interpretation of **ET557 Deactivation by cruise control/speed limiter function**.
3		**ET042:**	Cruise control/ speed limiter	**INACTIVE LIMIT CRUISE**	If there is a fault, use the interpretation for **ET042 Cruise control/Speed limiter**.
4		**ET413:**	Cruise control/ speed limiter function	**INACTIVE SUSPEND RESUME MINUS PLUS INACTIVE**	In the event of a fault, apply the interpretation for **ET413 Cruise control/Speed limiter function**.
5		**PR178:**	Cruise control switch voltage (except VELSATIS Vdiag 04)	If **ET045** is **"INACTIVE", PR178 = 5 ± 0.1 V**. If **ET045** is **"PLUS", PR178 = 2.4 ± 0.1 V**. If **ET045** is **"MINUS", PR178 = 1.3 ± 0.1 V**. If **ET045** is **"SUSPEND", PR178 = 0.1 ± 0.1 V**. If **ET045** is **"RESUME", PR178 = 3.76 ± 0.1 V**.	

GETtheMANUALS.org

NOTES	Only check conformity after a full check with the **diagnostic tool**. The values shown in this conformity check are given as a guide. **Test conditions: engine stopped, ignition on.**

CRUISE CONTROL/SPEED LIMITER (CONTINUED)

Order	Function	Parameter or Status Check or Action	Display and notes	Fault finding
6	**Cruise control/ speed limiter**	**ET556:** Driver deactivation of the cruise control/speed limiter Note: the cruise control can only be activated at a speed of V > 18 mph (30 km/h	**STATUS 1:** Brake pedal depressed **STATUS 2:** Traction control request **STATUS 3:** Press on the Suspend button **STATUS 4:** Decoupling of engine/gearbox **STATUS 5:** Gear lever in neutral position **STATUS 6:** Inconsistency between the request and the vehicle speed	In the event of a fault, apply the interpretation of **ET556 Driver deactivation of the cruise control/speed limiter**. **IMPORTANT** Certain deactivations are stored; to reinitialise this status use **RZ007 Fault memory**
7		**ET557:** Cruise control/ speed limiter deactivation by function Note: the cruise control can only be activated at a speed of V > **18 mph (30 km/h)**	**STATUS 1:** Fault in cruise control or speed limiter **STATUS 2:** Fault detected by the injection computer **STATUS 3:** Vehicle speed not refreshed **STATUS 4:** Vehicle speed invalid	In the event of a fault, apply the interpretation of **ET557 Deactivation by cruise control/speed limiter function**. **IMPORTANT** Certain deactivations are stored; to reinitialise this status use **RZ007 Fault memory**
8	**Brake pedal**	**ET012:** Primary brake contact	**RELEASED**	In the event of a fault, refer to the interpretation of status **ET012** Primary brake contact
9		**ET013:** Secondary brake contact	**RELEASED**	In the event of a fault, refer to the interpretation of status **ET013** Secondary brake contact

GETtheMANUALS.org

NOTES	Only check conformity after a full check with the **diagnostic tool**. The values shown in this conformity check are given as a guide. **Test conditions: engine stopped, ignition on.**

STARTING

Order	Function	Parameter or Status Check or Action		Display and notes	Fault finding
1	**Engine**	**ET038:**	Engine (except for VELSATIS Vdiag 04)	**NORMAL**	If status **ET038** is **STATUS 1**, carry out a conformity check using the **Emission control/ OBD** function.
2	**Computer feed voltage**	**PR071:**	Computer feed voltage	**11 V < PR071 < 15 V**	In the event of a fault, apply the interpretation of fault **DF175 Supply**.
3	**Sensor voltage**	**PR215:**	Sensor feed voltage no. 1	**4.9 ± 0.1 V**	If only one gang responds after the pedal is depressed, change the pedal sensor. If the voltages measured do not correspond to ± **0.5 V**, replace the pedal sensor.

GETtheMANUALS.org

NOTES	Only check conformity after a full check with the **diagnostic tool**. The values shown in this conformity check are given as a guide. **Test conditions: engine stopped, ignition on.**

PROTECTION

Order	Function	Parameter or Status Check or Action	Display and notes	Fault finding
1	**Impact detected**	**ET077:** Impact detected	**NO**	If **YES**, switch off the ignition for **40 seconds**, then switch it back on so the engine can be restarted. Then clear any faults.
2	**Engine immobiliser**	**ET003:** Engine immobiliser	**INACTIVE**	In the event of a fault, run a multiplex network test using the diagnostic tool; then if the test is OK, test the UCH.
3		**ET341:** Immobiliser code programmed	**YES**	If **NO**, refer to interpretation of ET341.

GETtheMANUALS.org

NOTES	The values indicated in this conformity check are only given as examples. It is therefore essential to refer to the Technical Note which deals with your vehicle. **Test conditions:** engine warm, idling at **80 ˚C**.

MAIN SCREEN

Order	Function	Parameter or Status Check or Action	Display and notes	Fault finding
1	**Impact detected**	**ET077:** Impact detected	**NO**	If **YES**, switch off the ignition for **40 seconds**, then switch it back on so the engine can be restarted. Then clear any faults.
2	**Engine speed**	**PR145:** Engine speed	**Gives the engine's rotational speed in rpm. 700 ± 50 rpm**	In the event of a fault apply the interpretation for **DF154 Flywheel signal sensor circuit**.
3	**Vehicle speed**	**PR155:** Vehicle speed	**Gives the vehicle speed in mph (km/h). 0 mph**	**Perform a fault finding procedure on the ABS computer.**
4	**Main relay**	**ET133:** Main relay control	**ACTIVE**	In the event of a fault, apply the interpretation of **DF015 Main relay control circuit**.
5	**Connection**	**ET226:** Injection/ multiplex network connection	**VALID**	In the event of a fault, test the multiplex network. Clear the faults.
6	**Computer feed voltage**	**PR071:** Computer feed voltage	**11 V < PR071 < 15 V**	In the event of a fault, apply the interpretation of fault **DF175 Supply**.
7	**Sensor supply voltages**	**PR215:** Sensor feed voltage no. 1	**4.9 V ± 0.1 V**	If only one gang responds after the pedal is depressed, change the pedal sensor. If the voltages measured do not correspond to ± **0.5 V**, replace the pedal sensor.

GETtheMANUALS.org

NOTES	The values indicated in this conformity check are only given as examples. It is therefore essential to refer to the Technical Note which deals with your vehicle. **Test conditions:** engine warm, idling at **80 ˚C**.

MAIN SCREEN (continued 1)

Order	Function	Parameter or Status Check or Action	Display and notes	Fault finding
8	**Pressure**	**PR035:** Atmospheric pressure	**Gives the atmospheric pressure in mbar.**	In the event of a fault, apply the interpretation for **DF003 Atmospheric pressure sensor circuit**.
9		**PR038:** Rail pressure	**PR038 = PR008 ± 10 mbar**	In the event of a fault, apply interpretation of fault **DF208 Fuel pressure solenoid valve circuit**.
10	**Temperature**	**PR058:** Air temperature	Check the values displayed by the sensors by referring to the "Glossaries". **PR064 ≈ PR066 ≈ 80 ˚C ± 5 ˚C**	In the event of a fault, apply the interpretation of faults **DF039 Air inlet temperature sensor circuit** (Vdiag 04, 08 only) **and DF324 OBD air temperature sensor circuit** (Vdiag 0C only).
11		**PR064:** Coolant temperature		If there is a fault use the interpretation for **DF001 Coolant temperature sensor circuit**.
12		**PR066:** Oil temperature		**In the event of a fault, apply the interpretation of the DF769 "Oil temperature"** (Vdiag 0C only).

GETtheMANUALS.org

NOTES	The values indicated in this conformity check are only given as examples. It is therefore essential to refer to the Technical Note which deals with your vehicle. **Test conditions:** engine warm, idling at **80 ˚C**.

MAIN SCREEN (continued 2)

Order	Function	Parameter or Status Check or Action		Display and notes	Fault finding
13	**Injection fault**	**ET028:**	Level 1 fault warning light request	**INACTIVE Warning light controlled by the engine injection computer: "allocated via the multiplex network".**	In the event of a fault with the interpretation of statuses **ET028 "Injection fault warning light request"**, and/or **ET029 "Serious injection fault warning light request"**, ensure no faults are present. If the fault is still present run fault finding on the instrument panel.
14		**ET029:**	Level 2 fault warning light request		
15	**OBD fault**	**ET148:**	OBD warning light activation request	**INACTIVE Warning light controlled by the engine injection computer: "allocated via the multiplex network".**	In the event of a fault with the interpretation of status **ET148 OBD warning light activation request,** ensure no faults are present. If the fault is still present run fault finding on the instrument panel.

GETtheMANUALS.org

NOTES	The values indicated in this conformity check are only given as examples. It is therefore essential to refer to the Technical Note which deals with your vehicle. **Test conditions:** engine warm, idling at **80 ˚C**.

AIR CIRCUIT (TURBO/INLET)

Order	Function	Parameter or Status Check or Action	Display and notes	Fault finding
1	**Engine speed**	**PR145:** Engine speed	**Gives the engine's rotational speed in rpm. 700 ± 50 rpm**	In the event of a fault apply the interpretation for **DF154 Flywheel signal sensor circuit**.
2	**Air temperature**	**PR058:** Air temperature	**- 40 ˚C < X < 120 ˚C**	In the event of a fault, apply the interpretation of faults **DF039 Air inlet temperature sensor circuit** (Vdiag 04, 08 only) **and DF324 OBD air temperature sensor circuit** (Vdiag 0C only).
3	**Pressure**	**PR035:** Atmospheric pressure	**990 < X < 1030 mbar**	In the event of a fault, apply the interpretation for **DF003 Atmospheric pressure sensor circuit**.
4		**PR041:** Turbocharging pressure	**PR035 = PR041**	In the event of a fault, apply the interpretation of **DF055 Turbocharging pressure regulation circuit**.
5	**Turbocharger**	**PR346:** Turbocharger wastegate valve position	**10 ± 0.1 mm**	

GETtheMANUALS.org

NOTES	The values indicated in this conformity check are only given as examples. It is therefore essential to refer to the Technical Note which deals with your vehicle. **Test conditions:** engine warm, idling at **80 °C**.

AIR CIRCUIT (TURBO/INLET) (CONTINUED 1)

Order	Function	Parameter or Status Check or Action		Display and notes	Fault finding
6	Pressure	**PR008:**	Rail pressure setpoint	During operation, parameter **PR213** should not exceed a **40 bar** difference at a stabilised idle speed. **PR213 = PR008 - PR038 ≈ 0 bar**	In the event of a fault, apply the interpretation of **DF208 Fuel pressure solenoid valve circuit**, and/or **DF197 Fuel pressure signal**.
7		**PR038:**	Rail pressure		
8		**PR213:**	Rail pressure loop difference		
9	**Air flow**	**PR146:**	Inlet air flow	N = 700 rpm and EGR = 3.2 mm: **PR146 = 42 kg/h ± 4.2** N = 700 rpm and EGR = 0 mm: **PR146 = 72.3 kg/h ± 7.2 kg/h** (To obtain EGR = 0 mm, depress the accelerator pedal **briefly** and release the pedal while displaying the **PR136 "EGR valve position"** parameter in the diagnostic tool, then freeze the image when parameter **PR136 = 0 mm**).	In the event of a fault, apply the interpretation of **DF056 Air flow sensor circuit**.

GETtheMANUALS.org

NOTES	The values indicated in this conformity check are only given as examples. It is therefore essential to refer to the Technical Note which deals with your vehicle. **Test conditions:** engine warm, idling at **80 ˚C**.

AIR CIRCUIT (TURBO/INLET) (CONTINUED 2)

Order	Function	Parameter or Status Check or Action		Display and notes	Fault finding
10	**Sensor voltages**	**PR083:**	Air temperature sensor voltage	**3.3 ± 0.1 V at 80 ˚C**	In the event of a fault, apply the interpretation of faults **DF039 Air inlet temperature sensor circuit** (Vdiag 04, 08 only) **and DF324 OBD air temperature sensor circuit** (Vdiag 0C only).
11		**PR079:**	Atmospheric pressure sensor voltage	**3.9 ± 0.1 V at 80 ˚C**	In the event of a fault, apply the interpretation for **DF003 Atmospheric pressure sensor circuit**.
12		**PR215:**	Sensor feed voltage no. 1	**4.9 ± 0.1 V**	If only one gang responds after the pedal is depressed, change the pedal sensor. If the voltages measured do not correspond to ± **0.5 V**, replace the pedal sensor.
13		**PR224:**	Turbocharging pressure sensor voltage	**1.96 ± 0.1 V at 80 ˚C**	In the event of a fault, apply the interpretation of **DF055 Turbocharging pressure regulation circuit**.
14		**PR345:**	Turbocharger wastegate potentiometer voltage	**PR345 = 0.45 V for PR346 = 10 mm**	
15		**PR225:**	Air flow sensor voltage	**3.29 ± 0.1 V at 80 ˚C**	In the event of a fault, apply the interpretation of **DF056 Air flow sensor circuit**.

GETtheMANUALS.org

NOTES	The values indicated in this conformity check are only given as examples. It is therefore essential to refer to the Technical Note which deals with your vehicle. **Test conditions:** engine warm, idling at **80 ˚C**.

FUEL CIRCUIT

Order	Function	Parameter or Status Check or Action		Display and notes	Fault finding
1	**Engine speed**	**PR145:**	Engine speed	**Gives the engine's rotational speed in rpm. 700 ± 50 rpm**	In the event of a fault apply the interpretation for **DF154 Flywheel signal sensor circuit**.
2	**Fuel temperature**	**PR063:**	Fuel temperature	**80 ± 5 ˚C**	In the event of a fault, apply the interpretation of **DF098 Fuel temperature sensor circuit**.
3	**Rail pressure**	**PR008:**	Rail pressure setpoint	During operation, parameter **PR213** should not exceed a **40 bar** difference at a stabilised idle speed. **PR213 = PR008 - PR038 ≈ 0 bar**	In the event of a fault, apply the interpretation of **DF208 "Fuel pressure solenoid valve circuit", or DF197 "Fuel pressure signal"**.
4		**PR038:**	Rail pressure		
5		**PR213:**	Rail pressure loop difference		
6	**Turbocharger**	**PR346:**	Turbocharger wastegate valve position	**PR346 = 10 mm at idling speed PR346 < 10 mm in deceleration**	In the event of a fault, apply the interpretation of **DF055 Turbocharging pressure regulation circuit**.
7	**Fuel flow**	**PR017:**	Fuel flow	**0 < X < 60 mm^3/stroke**	In the event of a fault, apply the interpretation of **DF197 "Fuel pressure signal"**
8	**Duration of injection**	**PR101:**	Duration of injection	**0 < X < 20000 µs**	

GETtheMANUALS.org

NOTES	The values indicated in this conformity check are only given as examples. It is therefore essential to refer to the Technical Note which deals with your vehicle. **Test conditions:** engine warm, idling at **80 ˚C**.

FUEL CIRCUIT (continued)

Order	Function	Parameter or Status Check or Action		Display and notes	Fault finding
9	**Sensor voltages**	**PR082:**	Fuel temperature sensor voltage	**1.62 ± 0.1 V at 80 ˚C**	In the event of a fault, apply the interpretation of **DF098 Fuel temperature sensor circuit**.
10		**PR223:**	Fuel pressure sensor voltage	**0.5 V < X < 2 V**	In the event of a fault, apply the interpretation of **DF208 Fuel pressure signal** and **DF197 Fuel pressure solenoid valve circuit**.
11	**Turbocharger potentiometer voltage**	**PR345:**	Turbocharger wastegate potentiometer voltage	**PR345 = 0.45 V for PR346 = 10 mm**	In the event of a fault, apply the interpretation of **DF055 Turbocharging pressure regulation circuit**.
12	**Fuel flow correction** (except for VELSATIS Vdiag 04)	**PR364:**	Cylinder no. 1 fuel flow correction	**± 1 mm^3/stroke**	If inconsistency, perform a check using **test 10 INCORRECT INJECTOR OPERATION**.
13		**PR405:**	Cylinder no. 2 fuel flow correction		
14		**PR406:**	Cylinder no. 3 fuel flow correction		
15		**PR365:**	Cylinder no. 4 fuel flow correction		
16		**PR407:**	Cylinder no. 5 fuel flow correction		
17		**PR408:**	Cylinder no. 6 fuel flow correction		

GETtheMANUALS.org

NOTES	The values indicated in this conformity check are only given as examples. It is therefore essential to refer to the Technical Note which deals with your vehicle. **Test conditions:** engine warm, idling at **80 ˚C**.

ANTI POLLUTION/OBD

Order	Function	Parameter or Status Check or Action	Display and notes	Fault finding
1	**Engine speed**	**PR145:** Engine speed	**Gives the engine's rotational speed in rpm.** **700 ± 50 rpm**	In the event of a fault apply the interpretation for **DF154 Flywheel signal sensor circuit**.
2	**EGR valve**	**PR136:** EGR position	**N = 700 rpm** When starting: **PR136 = 2 ± 0.1 mm** After a few minutes: **PR136 = 0 ± 0.1 mm**	In the event of a fault, apply the interpretation of **DF209 EGR valve position sensor circuit**.
3		**PR160:** EGR potentiometer voltage	**4 V ± 0.1 V**	
4	**Air flow**	**PR146:** Inlet air flow	N = 700 rpm and EGR = 3.2 mm: **PR146 = 42 kg/h ± 4.2** N = 700 rpm and EGR = 0 mm: **PR146 = 72.3 kg/h ± 7.2 kg/h** (To obtain EGR = 0 mm, depress the accelerator pedal **briefly** and release the pedal while displaying the **PR136 "EGR valve position"** parameter in the diagnostic tool, then freeze the image when parameter **PR136 = 0 mm**).	In the event of a fault, apply the interpretation of **DF056 Air flow sensor circuit**.
5		**PR225:** Air flow sensor voltage	**3.29 ± 0.1 V at 80 ˚C**	

GETtheMANUALS.org

NOTES	The values indicated in this conformity check are only given as examples. It is therefore essential to refer to the Technical Note which deals with your vehicle. **Test conditions:** engine warm, idling at **80 ˚C**.

EMISSION CONTROL/OBD (CONTINUED)

Order	Function	Parameter or Status Check or Action		Display and notes	Fault finding
6	**Combustion misfiring** (except for VELSATIS Vdiag 04)	**ET057:**	Misfiring on cylinder 1	**NOT DETECTED**	If inconsistency, perform a check using **test 10 INCORRECT INJECTOR OPERATION**. **IMPORTANT** To reinitialise this status, use **RZ007 Fault memory**.
7		**ET058:**	Misfiring on cylinder 2		
8		**ET059:**	Misfiring on cylinder 3		
9		**ET060:**	Misfiring on cylinder 4		
10		**ET061:**	Misfires in cylinder 5		
11		**ET062:**	Misfires in cylinder 6		
13	**OBD fault**	**ET148:**	OBD warning light activation request	**INACTIVE** **Warning light controlled by the engine injection computer: "allocated via the multiplex network".**	In the event of a fault with the interpretation of status **ET148 "OBD warning light activation request" ensure no faults are present**. If the fault is still present run fault finding on the instrument panel.

GETtheMANUALS.org

NOTES	The values indicated in this conformity check are only given as examples. It is therefore essential to refer to the Technical Note which deals with your vehicle. **Test conditions:** engine warm, idling at **80 ˚C**.

DRIVER PARAMETERS

Order	Function	Parameter or Status Check or Action		Display and notes	Fault finding
1	**Engine speed**	**PR145:**	Engine speed	**Gives the engine's rotational speed in rpm. 700 ± 50 rpm**	In the event of a fault apply the interpretation for **DF154 Flywheel signal sensor circuit**.
2	**Accelerator pedal**	**PR030:**	Accelerator pedal position	**0 %**	If only one gang responds after the pedal is depressed, change the pedal sensor. If the voltages measured do not correspond to ± **0.5 V**, replace the pedal sensor.
3		**PR147:**	Pedal potentiometer voltage gang 1	**No load: PR147 = 0.7 ± 0.1 V Full load: PR147 = 4.5 ± 0.1 V**	
4		**PR148:**	Pedal potentiometer voltage gang 2	**No load: PR148 = 0.35 ± 0.1 V Full load: PR148 = 2.2 ± 0.1 V**	
5		**PR342:**	Pedal sensor power supply gang 1	**4.9 ± 0.5 V**	
6	**Voltage**	**PR215:**	Sensor feed voltage no. 1	**4.9 ± 0.5 V**	
7	**Brake pedal**	**ET012:**	Primary brake contact	**RELEASED**	In the event of a fault, refer to the interpretation of status **ET012** Primary brake contact
8		**ET013:**	Secondary brake contact	**RELEASED**	In the event of a fault, refer to the interpretation of status **ET013 Secondary brake contact**.

GETtheMANUALS.org

NOTES	The values indicated in this conformity check are only given as examples. It is therefore essential to refer to the Technical Note which deals with your vehicle. **Test conditions:** engine warm, idling at **80 ˚C**.

IGNITION/PREHEATING

Order	Function	Parameter or Status Check or Action		Display and notes	Fault finding
1	**Engine**	**ET038:**	Engine (except for VELSATIS Vdiag 04)	**NORMAL**	If status **ET038** is **STATUS 1**, carry out a conformity check using the **Emission control/ OBD** function.
2	**Engine speed**	**PR145:**	Engine speed	**Gives the engine's rotational speed in rpm. 700 ± 50 rpm**	In the event of a fault apply the interpretation for **DF154 Flywheel signal sensor circuit**.
3	**Temperature**	**PR064:**	Coolant temperature	Check the values displayed by the sensors by referring to the "Glossary" section. **PR064 = 80 ˚C ± 5 ˚C**	If there is a fault use the interpretation for **DF001 Coolant temperature sensor circuit**.
4		**PR058:**	Air temperature		In the event of a fault, apply the interpretation of faults **DF039 Air inlet temperature sensor circuit** (Vdiag 04, 08 only) **and DF324 OBD air temperature sensor circuit** (Vdiag 0C only).
5	**Preheating**	**PR176:**	Preheating phase	**0 < X < 30 s**	In the event of a fault, refer to the interpretation of **ET134 Pre/postheating relay control**.
6		**ET134:**	Pre-postheating relay control	**ACTIVE** during the preheating phase, then **INACTIVE**	
7		**ET204:**	Control for preheating warning light	**ACTIVE** during the preheating phase, then **INACTIVE**	If there is a fault, consult the interpretation of status **ET204 Preheating warning light control**.
8	**Computer feed voltage**	**PR071:**	Computer feed voltage	**11 V < X < 15 V**	In the event of a fault, apply the interpretation of fault **DF175 "Supply"**.

GETtheMANUALS.org

NOTES	The values indicated in this conformity check are only given as examples. It is therefore essential to refer to the Technical Note which deals with your vehicle. **Test conditions:** engine warm, idling at **80 ˚C**.

ENGINE COOLING

Order	Function	Parameter or Status Check or Action		Display and notes	Fault finding
1	Temperature	**PR058:**	Air temperature	Check the values displayed by the sensors by referring to the "Glossaries". **PR064 ≈ PR066 ≈ PR063 ≈ 80 ˚C ± 5 ˚C**	In the event of a fault, apply the interpretation of faults **DF039 Air inlet temperature sensor circuit** (Vdiag 04, 08 only) **and DF324 OBD air temperature sensor circuit** (Vdiag 0C only).
2		**PR064:**	Coolant temperature		If there is a fault use the interpretation for **DF001 Coolant temperature sensor circuit**.
3		**PR066:**	Oil temperature		In the event of a fault, apply the interpretation of the **DF769 Oil temperature** (Vdiag 0C only).
4		**PR063:**	Fuel temperature		In the event of a fault, apply the interpretation of **DF098 Fuel temperature sensor circuit**.

GETtheMANUALS.org

NOTES	The values indicated in this conformity check are only given as examples. It is therefore essential to refer to the Technical Note which deals with your vehicle. **Test conditions:** engine warm, idling at **80 ˚C**.

ENGINE COOLING (CONTINUED 1)

Order	Function	Parameter or Status Check or Action	Display and notes	Fault finding
5	**Antipercolation device**	**ET273:** Anti-percolation	**INACTIVE**	In the event of a fault, refer to the interpretation of status **ET273** Anti-percolation
6	**Motor-driven fan assembly**	**ET143:** Low speed fan assembly relay control	**ACTIVE** for an engine operating temperature greater than **99 ˚C** and is stopped for a temperature lower than **96 ˚C**.	In the event of a fault, refer to the interpretation of **ET143 Low speed fan relay control**.
7		**ET144:** High-speed fan assembly relay control	**INACTIVE** for an engine operating temperature less than **102 ˚C** and stops for a temperature less than **99 ˚C**.	In the event of a fault, refer to the interpretation of **ET144 High speed fan relay control**.

GETtheMANUALS.org

NOTES	The values indicated in this conformity check are only given as examples. It is therefore essential to refer to the Technical Note which deals with your vehicle. **Test conditions:** engine warm, idling at **80 ˚C**.

ENGINE COOLING (CONTINUED 2)

Order	Function	Parameter or Status Check or Action	Display and notes	Fault finding
8	**Sensor voltage**	**PR083:** Air temperature sensor voltage	**3.3 ± 0.1 V at 80 ˚C**	In the event of a fault, apply the interpretation of faults **DF039 Air inlet temperature sensor circuit** (Vdiag 04, 08 only) **and DF324 OBD air temperature sensor circuit** (Vdiag 0C only).
9		**PR084:** Coolant temperature sensor voltage	**1.3 ± 0.1 V at 80 ˚C**	If there is a fault use the interpretation for **DF001 Coolant temperature sensor circuit**.
10		**PR085:** Oil temperature sensor voltage	**1.4 V ± 0.1 V at 80 ˚C**	In the event of a fault, apply the interpretation of **DF058 Oil temperature sensor circuit** (Vdiag 0C only).
11		**PR082:** Fuel temperature sensor voltage	**1.6 ± 0.1 V at 80 ˚C**	In the event of a fault, apply the interpretation of **DF098 Fuel temperature sensor circuit**.
12	**Coolant temperature warning light**	**ET027:** Coolant temperature warning light request	**INACTIVE**	**In the event of a fault with interpretation of ET027 "Coolant temperature warning light request",** run fault finding on the instrument panel.

GETtheMANUALS.org

NOTES	The values indicated in this conformity check are only given as examples. It is therefore essential to refer to the Technical Note which deals with your vehicle. **Test conditions:** engine warm, idling at **80 ˚C**.

HEATING

Order	Function	Parameter or Status Check or Action		Display and notes	Fault finding
1	**Coolant temperature**	**PR064:**	Coolant temperature	**80 ˚C ± 5 ˚C**	If there is a fault use the interpretation for **DF001 Coolant temperature sensor circuit**.
2	**Heating element**	**ET276:**	Heating elements	**WITH (depending on vehicle configuration)**	In the event of a fault, apply the interpretation of **ET276 Heating elements**.
3	**Sensor voltage**	**PR084:**	Coolant temperature sensor voltage	**1.3 ± 0.1 V at 80 ˚C**	If there is a fault use the interpretation for **DF001 Coolant temperature sensor circuit**.
4	**Heating element**	**ET205:**	Heating element no. 1 relay control	**INACTIVE at 80 ˚C**	In the event of a fault, apply the interpretation of **ET205 Heating element no. 1 relay control**.
5		**ET206:**	Heating element no. 2 relay control	**INACTIVE at 80 ˚C**	In the event of a fault, apply the interpretation of **ET206 Heating element no. 2 relay control**.
6		**ET207:**	Heating element no. 3 relay control	**INACTIVE at 80 ˚C**	In the event of a fault, apply the interpretation of **ET207 Heating element no. 3 relay control**.

GETtheMANUALS.org

NOTES	The values indicated in this conformity check are only given as examples. It is therefore essential to refer to the Technical Note which deals with your vehicle. **Test conditions:** engine warm, idling at **80 ˚C**.

CRUISE CONTROL/SPEED LIMITER

Order	Function	Parameter or Status Check or Action		Display and notes	Fault finding
1	**Vehicle speed**	**PR155:**	Vehicle speed	**Gives the vehicle speed in mph (km/h). 0 mph**	**Perform a fault finding procedure on the ABS computer.**
2	**Cruise control/ speed limiter**	**PR130:**	Cruise control setpoint	**0 mph**	In the event of a fault, apply the interpretation of **ET557 Deactivation by cruise control/speed limiter function**.
3		**ET042:**	Cruise control/ speed limiter	**INACTIVE LIMIT CRUISE**	If there is a fault, use the interpretation for **ET042 Cruise control/Speed limiter**.
4		**ET413:**	Cruise control/ speed limiter function	**INACTIVE SUSPEND RESUME MINUS PLUS INACTIVE**	In the event of a fault, apply the interpretation for **ET413 Cruise control/Speed limiter function**.
5		**PR178:**	Cruise control switch voltage (except VELSATIS Vdiag 04)	If **ET045** is **"INACTIVE", PR178 = 5 ± 0.1 V**. If **ET045** is **"PLUS", PR178 = 2.4 ± 0.1 V**. If **ET045** is **"MINUS", PR178 = 1.3 ± 0.1 V**. If **ET045** is **"SUSPEND", PR178 = 0.1 ± 0.1 V**. If **ET045** is **"RESUME", PR178 = 3.76 ± 0.1 V**.	

GETtheMANUALS.org

NOTES	The values indicated in this conformity check are only given as examples. It is therefore essential to refer to the Technical Note which deals with your vehicle. **Test conditions:** engine warm, idling at **80 ˚C**.

CRUISE CONTROL/SPEED LIMITER (CONTINUED)

Order	Function	Parameter or Status Check or Action	Display and notes	Fault finding
6	**Cruise control/ speed limiter (continued)**	**ET556:** Driver deactivation of the cruise control/speed limiter Note: the cruise control can only be activated at a speed of V > 18 mph (30 km/h	**STATUS 1:** Brake pedal depressed **STATUS 2:** Traction control request **STATUS 3:** Press on the Suspend button **STATUS 4:** Decoupling of engine/gearbox **STATUS 5:** Gear lever in neutral position **STATUS 6:** Inconsistency between the request and the vehicle speed	In the event of a fault, apply the interpretation of **ET556 Driver deactivation of the cruise control/speed limiter**. **IMPORTANT** Certain deactivations are stored; to reinitialise this status use **RZ007 Fault memory**
7		**ET557:** Cruise control/ speed limiter deactivation by function Note: the cruise control can only be activated at a speed of V > 18 mph (30 km/h).	**STATUS 1:** Fault in cruise control or speed limiter **STATUS 2:** Fault detected by the injection computer **STATUS 3:** Vehicle speed not refreshed **STATUS 4:** Vehicle speed invalid	In the event of a fault, apply the interpretation of **ET557 Deactivation by cruise control/speed limiter function**. **IMPORTANT** Certain deactivations are stored; to reinitialise this status use **RZ007 Fault memory**
8	**Brake pedal**	**ET012:** Primary brake contact	**RELEASED**	In the event of a fault, refer to the interpretation of status **ET012** Primary brake contact
9		**ET013:** Secondary brake contact	**RELEASED**	In the event of a fault, refer to the interpretation of status **ET013** Secondary brake contact

GETtheMANUALS.org

NOTES	The values indicated in this conformity check are only given as examples. It is therefore essential to refer to the Technical Note which deals with your vehicle. **Test conditions:** engine warm, idling at **80 ˚C**.

STARTING

Order	Function	Parameter or Status Check or Action		Display and notes	Fault finding
1	**Engine**	**ET038:**	Engine (except for VELSATIS Vdiag 04)	**NORMAL**	If status **ET038** is **STATUS 1**, carry out a conformity check using the **Emission control/ OBD** function.
2	**Computer feed voltage**	**PR071:**	Computer feed voltage	**11 V < PR071 < 15 V**	In the event of a fault, apply the interpretation of fault **DF175 Supply**.
3	**Sensor voltage**	**PR215:**	Sensor feed voltage no. 1	**4.9 ± 0.1 V**	If only one gang responds after the pedal is depressed, change the pedal sensor. If the voltages measured do not correspond to ± **0.5 V**, replace the pedal sensor.

GETtheMANUALS.org

NOTES	The values indicated in this conformity check are only given as examples. It is therefore essential to refer to the Technical Note which deals with your vehicle. **Test conditions:** engine warm, idling at **80 ˚C**.

PROTECTION

Order	Function	Parameter or Status Check or Action	Display and notes	Fault finding
1	**Impact detected**	**ET077:** Impact detected	**NO**	If **YES**, switch off the ignition for **40 seconds**, then switch it back on so the engine can be restarted. Then clear any faults.
2	**Engine immobiliser**	**ET003:** Engine immobiliser	**INACTIVE**	In the event of a fault, run a multiplex network test using the diagnostic tool; then if the test is OK, test the UCH.
3		**ET341:** Immobiliser code programmed	**YES**	If **NO**, refer to interpretation of ET341.

GETtheMANUALS.org

Tool status	Diagnostic tool title
ET003	Engine immobiliser
ET012	Primary brake contact
ET013	Secondary brake contact
ET027	Coolant temperature warning light request
ET028	Level 1 fault warning light request
ET029	Level 2 fault warning light request
ET038	Engine (except for VELSATIS Vdiag 04)
ET042	Cruise control/speed limiter
ET057	Misfire on cylinder 1 (except VELSATIS Vdiag 04)
ET058	Misfire on cylinder 2 (except VELSATIS Vdiag 04)
ET059	Misfire on cylinder 3 (except VELSATIS Vdiag 04)
ET060	Misfire on cylinder 4 (except VELSATIS Vdiag 04)
ET077	Impact detected
ET133	Main relay control
ET134	P
ET143	Low speed fan assembly relay control
ET144	High-speed fan assembly relay control
ET148	OBD warning light activation request (VELSATIS Vdiag 08, 0C only)
ET204	Control for preheating warning light
ET205	Heating element no. 1 relay control
ET206	Heating element no. 2 relay control
ET207	Heating element no. 3 relay control
ET273	Anti-percolation
ET274	Misfire on cylinder 5 (except VELSATIS Vdiag 04)
ET275	Misfire on cylinder 6 (except VELSATIS Vdiag 04)
ET276	Heating elements (except VELSATIS Vdiag 04)
ET341	Immobiliser code programmed
ET413	Cruise control/speed limiter function
ET556	Driver deactivation of the cruise control/speed limiter
ET557	Deactivation by cruise control/speed limiter function

GETtheMANUALS.org

ET003	ENGINE IMMOBILISER

NOTES	**Special note:** Apply the conformity check to see if the statuses are consistent with the operating programs of the system.

ACTIVE	If status **ET003** is permanently **ACTIVE**, refer to the interpretation of the UCH fault finding note (see **87G, Connection unit**).
INACTIVE	When the ignition is switched on, and when driving, status **ET003** becomes **INACTIVE**. If this does not occur, refer to the interpretation of the UCH fault finding note (see **87G, Connection unit**).

AFTER REPAIR	Carry out another fault finding check on the system. Deal with any other faults. Clear the stored faults.

GETtheMANUALS.org

ET012	PRIMARY BRAKE CONTACT

NOTES	**Special note:** Apply the conformity check to see if the statuses are consistent with the operating programs of the system.

PRESSED

When the driver presses the brake pedal, status **ET012** becomes "**PRESSED**", and status **ET013 "Secondary brake contact"** becomes "**PRESSED**".

If the driver depresses the brake pedal and status **ET012** remains **RELEASED** and **the brake lights are operating**:
Check:
– the condition of the brake light switch contacts and connections.
– the **continuity and absence of interference resistance** on the following connection:

Diesel computer **track A 21** ⟶ brake switch **black connector, tracks B3 or 3**

Repair if necessary.

If the driver depresses the brake pedal and status **ET012** remains **PRESSED** and **the brake lights are not operating**:
Check:
– the condition of the bulbs, replace if necessary,
– the condition of the **F6 (20A)** fuse in the passenger compartment fuse box and relay,
– the presence of **+ 12 V** after ignition on **tracks A1** and **B1** or **track 2** of the switch,
– then remove the brake light switch and carry out the checks in the following table:

	Continuity between tracks	**Insulation between tracks**
Switch pressed (brake pedal released)	A1 and B3 Or 2 and 3	B1 and A3 Or 2 and 1
Switch released (brake pedal pressed)	B1 and A3 Or 2 and 1	A1 and B3 Or 2 and 3

If these checks are not in order, replace the brake light switch.

AFTER REPAIR	Carry out another fault finding check on the system. Deal with any other faults. Clear the stored faults.

GETtheMANUALS.org

ET012 CONTINUED	

RELEASED	When the driver releases the brake pedal, status **ET012** becomes **RELEASED**, and status **ET013 Secondary brake contact** becomes **RELEASED**. If this does not happen, check the condition and operation of the brake light switch by carrying out the checks associated with the **PRESSED** status.

Note:
The statuses **ET012 Primary brake contact** and **ET013 Secondary brake contact** are directly linked.

AFTER REPAIR	Carry out another fault finding check on the system. Deal with any other faults. Clear the stored faults.

GETtheMANUALS.org

ET013	SECONDARY BRAKE CONTACT

NOTES	**Special note:** Apply the conformity check to see if the statuses are consistent with the operating programs of the system.

PRESSED

When the driver depresses the brake pedal, status **ET013** becomes "**PRESSED**", and status **ET012 "Primary brake contact"** becomes "**PRESSED**".

If the driver depresses the brake pedal and status **ET013** remains "**RELEASED**" and **the brake lights are operating**:
Check:
– the condition of the brake light switch contacts and connections.
– the **continuity and absence of interference resistance** on the following connection:

Diesel computer **track A 21** ⟶ brake switch **black connector, tracks B3 or 3**

Repair if necessary.

If the driver depresses the brake pedal and status **ET013** remains **PRESSED** and **the brake lights are not operating**:
Check:
– the condition of the bulbs, replace if necessary,
– the condition of the **F6 (20A)** fuse in the passenger compartment fuse box and relay,
– the presence of **+ 12 V** after ignition on **tracks A1** and **B1** or **track 2** of the switch,
– then remove the brake light switch and carry out the checks in the following table:

	Continuity between tracks	**Insulation between tracks**
Switch pressed (brake pedal released)	A1 and B3 Or 2 and 3	B1 and A3 Or 2 and 1
Switch released (brake pedal pressed)	B1 and A3 Or 2 and 1	A1 and B3 Or 2 and 3

If these checks are not in order, replace the brake light switch.

AFTER REPAIR	Carry out another fault finding check on the system. Deal with any other faults. Clear the stored faults.

GETtheMANUALS.org

ET013 CONTINUED	

RELEASED	When the driver releases the brake pedal, status **ET013** becomes **RELEASED**, and status **ET012 Primary brake contact** becomes **RELEASED**. If this does not happen, check the condition and operation of the brake light switch by carrying out the checks associated with the **PRESSED** status.

Note:
The statuses **ET012 Primary brake contact** and **ET013 Secondary brake contact** are directly linked.

AFTER REPAIR	Carry out another fault finding check on the system. Deal with any other faults. Clear the stored faults.

GETtheMANUALS.org

ET038	Engine

NOTES	**Special note:** Apply the conformity check to see if the statuses are consistent with the operating programs of the system.

Except VELSATIS Vdiag 04

NORMAL	After starting the engine, status **ET038** becomes **NORMAL**. Run a multiplex network test (see **88B, Multiplex**).
STATUS 1:	Status **ET038** is permanently **STATUS 1** when the engine misfires (combustion fault). Perform a conformity check using the **Fuel circuit** sub-function. **Check:** – that the injectors are in good condition, – the compression rate, – the high pressure circuit sealing (leaks, etc.), – the other faults displayed by the diagnostic tool. If the fault is still present, contact Techline.

AFTER REPAIR	Carry out another fault finding check on the system. Deal with any other faults. Clear the stored faults.

GETtheMANUALS.org

ET042	CRUISE CONTROL/SPEED LIMITER

NOTES	**Special note:** Apply the conformity check to see if the statuses are consistent with the operating programs of the system.

CRUISE CONTROL	When the driver presses the cruise control switch, status **ET042** must change to **CRUISE** and the **green** speed limiter warning light on the instrument panel must be displayed. Check the **insulation, continuity and absence of interference resistance** of the following connection: Diesel computer **track A 81** ⟶ **track A3** of the cruise control switch Repair if necessary.
	If the fault has still not been solved, look for possible damage to the wiring harness, check the **connections and condition** of the cruise control switch and its connections. Replace or repair if necessary. If the fault is still present, contact the Techline.

LIMITER	When the driver presses the cruise control switch, status **ET042** must change to **LIMIT** and the **orange** speed limiter warning light on the instrument panel must be displayed. Check the **insulation, continuity and absence of interference resistance** of the following connection: Diesel computer **track A 23** ⟶ **track B1** of the cruise control switch Repair if necessary.
	If the fault has still not been solved, look for possible damage to the wiring harness, check the **connections and condition** of the cruise control switch and its connections. Replace or repair if necessary. If the fault is still present, contact the Techline.

AFTER REPAIR	Carry out another fault finding check on the system. Deal with any other faults. Clear the stored faults.

GETtheMANUALS.org

ET077	IMPACT DETECTED

NOTES	**Special note:** Apply the conformity check to see if the statuses are consistent with the operating programs of the system.

YES	If the vehicle has been involved in an accident, the injection computer receives the impact signal via the multiplex network and may switch off the ignition. Status **ET077** is **YES**. Switch off the ignition for **10 seconds**, then switch it back on, so the engine can be restarted. Test the multiplex network (see **88B, Multiplexing**) and deal with any faults present.
NO	Under normal operating conditions, status **ET077** is **NO** when the computer has received no impact signal.

AFTER REPAIR	Carry out another fault finding check on the system. Deal with any other faults. Clear the stored faults.

GETtheMANUALS.org

ET133	MAIN RELAY CONTROL

NOTES	**Special note:** Apply the conformity check to see if the statuses are consistent with the operating programs of the system.

ACTIVE	Status **ET133** becomes **ACTIVE** when the main relay is supplied with power. If status **ET133** is permanently "**INACTIVE**", refer to the interpretation of fault **DF015 "Main relay control circuit"**.

INACTIVE	If status **ET133** is permanently "**INACTIVE**", refer to the interpretation of fault **DF015 "Main relay control circuit"**.

AFTER REPAIR	Carry out another fault finding check on the system. Deal with any other faults. Clear the stored faults.

GETtheMANUALS.org

ET134	PRE-POSTHEATING RELAY CONTROL

NOTES	**Special note:** Apply the conformity check to see if the statuses are consistent with the operating programs of the system.

ACTIVE	When the ignition is switched on, status **ET134** becomes **ACTIVE** for a time that varies according to the engine coolant temperature. Both the relay and the heater plugs are then supplied. When the vehicle is started from cold, the injection computer always actuates the preheating unit to allow the vehicle to start more easily; the status becomes **ACTIVE** during the starting phase. After starting, the status should remain **ACTIVE** for a variable period depending on the engine coolant temperature. If the vehicle does not start and status **ET134** becomes "**ACTIVE**" when switching on the ignition or during the starting phase, a preheating connection or circuit component may be damaged.

AFTER REPAIR	Carry out another fault finding check on the system. Deal with any other faults. Clear the stored faults.

GETtheMANUALS.org

ET134 CONTINUED	

"ACTIVE" (CONTINUED)

Check:
– the **F12 (70A)** power fuse on the supply and power board,
– the **+ 12 V** feed to heater plugs after relay control, and the relay connections,
– the **continuity and absence of interference resistance** of the following connections:

Pre-postheating unit, white connector, **track 1**	→	Heater plug no. 1 **track 1**
Pre-postheating unit, purple connector, **track 1**	→	Heater plug no. 2 **track 1**
Pre-postheating unit, white connector, **track 2**	→	Heater plug no. 3 **track 1**
Pre-postheating unit, purple connector, **track 2**	→	Heater plug no. 4 **track 1**
Pre-postheating unit, white connector, **track 6**	→	Heater plug no. 5 **track 1**
Pre-postheating unit, purple connector, **track 6**	→	Heater plug no. 6 **track 1**

– the condition and correct connection of the contacts of the pre-postheating unit **R300** connector.

If the vehicle starts, the preheating has finished and status **ET134** remains "**ACTIVE**" during the engine operating phase, consult the interpretation of faults **DF186 "Heater plugs circuit", DF262 "Heater plugs no. 1 group circuit"** and **DF263 "Heater plugs no. 2 group circuit"**.

INACTIVE

If the vehicle does not start, the status remains **INACTIVE** and the preheating was not performed when the ignition was switched on or during the starting phase, check the following connections:

Diesel computer **track A 19**	→	Pre-postheating unit **green connector, track 8**
Diesel computer **track A 49**	→	Pre-postheating unit **green connector, track 9**
Diesel computer **track A 68**	→	Pre-postheating unit, purple connector, **track 9**

Repair if necessary.

AFTER REPAIR	Carry out another fault finding check on the system. Deal with any other faults. Clear the stored faults.

GETtheMANUALS.org

ET143	LOW-SPEED FAN ASSEMBLY RELAY CONTROL

NOTES	Apply the conformity check to see if the statuses are consistent with the operating programs of the system. If the vehicle is fitted with air conditioning, the fan assembly electrical circuit contains 2 relays. Fan assembly speed 1 relay will be run when the temperature of the engine coolant exceeds **96**˚ and will be dedicated to cooling of the engine as long as the engine coolant temperature does not exceed **99**˚. If the engine coolant temperature exceeds **99**˚, fan assembly speed 2 relay will be run and the engine cooling fan will run more quickly.

ACTIVE	When the coolant reaches **96 ˚C**, the diesel computer actuates the low speed fan relay and status **ET143** becomes **ACTIVE**. The relay then supplies the fan assembly and the cooling fan begins to turn. Run command **AC038 Low-speed fan assembly relay** and check visually that the cooling fan is turning. If this is not the case, carry out the following operations: – check the condition of the **F15 (60A)** fuse and the engine relay, – disconnect the low-speed and high-speed relays, check their operation and the condition of the connections. – repair if necessary, – Check for **+ 12 V** on **terminal 10** of the low-speed relay during its actuation, – then check the **continuity and the absence of interference resistance** of the following connection: Diesel computer **track A 18** ⟶ **track 11** of the low-speed relay

INACTIVE	If the engine temperature is lower than **96 ˚C**, the engine cooling fan cannot switch on and the low speed engine cooling fan relay cannot be run. Status **ET143** becomes **INACTIVE** when the control relay and the engine cooling fan are not supplied.

AFTER REPAIR	Carry out another fault finding check on the system. Deal with any other faults. Clear the stored faults.

GETtheMANUALS.org

ET144	HIGH-SPEED FAN ASSEMBLY RELAY CONTROL

NOTES	Apply the conformity check to see if the statuses are consistent with the operating programs of the system. If the vehicle is fitted with air conditioning, the fan assembly electrical circuit contains 2 relays. Fan assembly speed 2 relay will be actuated when the engine coolant temperature exceeds **99 ˚C** and will be dedicated to engine cooling as long as the engine coolant temperature does not exceed **102 ˚C**.

ACTIVE	When the coolant reaches **99 ˚C**, the diesel computer activates the high speed fan relay and status **ET144** becomes **ACTIVE**. The relay then supplies the fan assembly and the cooling fan begins to turn. Run command **AC039 High-speed fan assembly relay** and visually check that the cooling fan is turning. If this is not the case, carry out the following operations: – check the condition of the **F15 (60A)** fuse and the engine relay, – disconnect the fan unit relays, check their operation and the condition of the connections, – repair if necessary, – Check for the presence of **+ 12 V** on **terminal 6** of the fan unit and on **terminal 62** of the high speed relay when it is actuated, – then check the **continuity and absence of interference resistance** of the following connections: Diesel computer **track A 38** → **track 7** of the fan assembly relay Fan unit relay **track 7** → High speed relay **track 60**

INACTIVE	If the engine temperature is lower than **99 ˚C**, the engine cooling fan cannot switch on and the high speed engine cooling fan relay cannot be run. Status **ET144** becomes **INACTIVE** when the control relay and the engine cooling fan are not supplied.

AFTER REPAIR	Carry out another fault finding check on the system. Deal with any other faults. Clear the stored faults.

GETtheMANUALS.org

ET204	PREHEATING WARNING LIGHT CONTROL

NOTES	Apply the conformity check to see if the statuses are consistent with the operating programs of the system. Statuses **ET028 Level 1 fault warning light request** and **ET204 Preheating warning light control** are directly linked. If one is active, the other must assume the same status.

ACTIVE	Check that status **ET204** becomes **ACTIVE** and that the preheating warning light is activated when the ignition is switched on.
	Perform a fault finding procedure beforehand on the multiplex network.
	If the network is not correct (see **88B Multiplexing**).
	If the network diagnosis is OK, check:
	– the complete engine injection system,
	– deal with any faults,
	– If the fault is still present, check the preheating unit and the heater plugs using the following faults:
	  – **DF186 Heater plug circuit,**
	  – **DF262** Heater plug group no. 1 circuit
	  – **DF263 Heater plug group no. 2 circuit.**
	– check the preheating relay using command **AC037 Preheating relay**.
	– if the fault is still present, perform a fault finding procedure on the instrument panel (see **MR 353, MR 402 or MR 361 Mechanical, 83A, Instrument panel**),
	– If the fault is still present, contact the Techline.

INACTIVE	Status **ET204 "Preheating warning light control"** is "**INACTIVE**" when the preheating warning light is off.

AFTER REPAIR	Carry out another fault finding check on the system. Deal with any other faults. Clear the stored faults.

GETtheMANUALS.org

ET205	HEATING ELEMENT 1 RELAY CONTROL

NOTES	**Special note:** Apply the conformity check to see if the statuses are consistent with the operating programs of the system.

ACTIVE

Status **ET205** becomes **ACTIVE** when the heating element no. 1 relay control is activated.
Where the heating element no. 1 relay is requested and status **ET205** is not **ACTIVE** when the ignition is switched on, a connection or circuit component of the heating element no. 1 relay may be damaged.

Check:
– the heating element no. 1 relay fuse **F14 (70 A)**,
– the heating element no. 1 relay mounting connections,
– the engine management computer connections,
– repair if necessary,
– check for **insulation from earth, continuity and absence of interference resistance** on the following connections:

Diesel computer **track A 1** → Heating element no. 1 relay **track 2**

Diesel computer **track A 2** → Heating element no. 1 relay **track 2**

– check the **continuity, insulation from + 12 V and the absence of interference resistance** for the following connection:

Diesel computer **track A 36** → Heating element no.1 relay **track 65**

INACTIVE

Status **ET205** becomes **INACTIVE** when the heating control is not activated.

AFTER REPAIR	Carry out another fault finding check on the system. Deal with any other faults. Clear the stored faults.

GETtheMANUALS.org

ET206	HEATING ELEMENT 2 RELAY CONTROL

NOTES	**Special note:** Apply the conformity check to see if the statuses are consistent with the operating programs of the system.

ACTIVE

Status **ET206** becomes **ACTIVE** when the heating element no. 2 relay control is activated.
Where the heating element no. 2 relay is requested and status **ET206** is not **ACTIVE** when the ignition is switched on, a connection or circuit component of the heating element no. 2 relay may be damaged.

Check:
– the heating element no. 2 relay fuse **F13 (70 A)**,
– the heating element no. 2 relay mounting connections,
– the engine management computer connections,
– repair if necessary,
– check for **insulation from earth, continuity and absence of interference resistance** on the following connections:

Diesel computer **track A 1** → Heating element no. 2 relay **track 2**

Diesel computer **track A 2** → Heating element no. 2 relay **track 2**

– check the **continuity, insulation from + 12 V and the absence of interference resistance** for the following connection:

Diesel computer **track A 17** → Heating element no. 2 relay **track 3**

INACTIVE

Status **ET206** becomes **INACTIVE** when the heating control is not activated.

AFTER REPAIR	Carry out another fault finding check on the system. Deal with any other faults. Clear the stored faults.

GETtheMANUALS.org

ET207	HEATING ELEMENT No. 3 RELAY CONTROL

NOTES	**Special note:** Apply the conformity check to see if the statuses are consistent with the operating programs of the system.

ACTIVE

Status **ET207** must be **ACTIVE** when the heating element no. 3 relay control is activated. Where the no. 3 relay is requested and status **ET207** is not **ACTIVE** when the ignition is switched on, a connection or circuit component of the heating element no. 3 relay may be damaged.

Check:
- the heating element no. 3 relay fuse **F14 (70 A)**,
- the heating element no. 3 relay mounting connections,
- the engine management computer connections,
- repair if necessary,
- check for **insulation from earth, continuity and absence of interference resistance** on the following connections:

  Diesel computer **track A 1** → Heating element no. 3 relay **track 2**

  Diesel computer **track A 2** → Heating element no. 3 relay **track 2**

- check the **continuity, insulation from + 12 V and the absence of interference resistance** for the following connection:

  Diesel computer **track A 56** → Heating element no. 3 relay **track 35**

INACTIVE

Status **ET207** becomes **INACTIVE** when the heating control is not engaged.

AFTER REPAIR	Carry out another fault finding check on the system. Deal with any other faults. Clear the stored faults.

GETtheMANUALS.org

ET273	ANTI-PERCOLATION

NOTES	**Special note:** Apply the conformity check to see if the statuses are consistent with the operating programs of the system.

ACTIVE	Status **ET273** is "**ACTIVE**" when the engine management computer detects a high engine coolant temperature after the engine is stopped. The engine management program operates the fan to cool the engine and continuously checks the coolant temperature.
STANDBY	Status **ET273** is "**STANDBY**" when the engine has just been stopped. The status corresponds to an engine coolant temperature control phase after the engine has stopped. If the coolant temperature exceeds the maximum predefined threshold, status **ET273** becomes "**ACTIVE**". If the coolant temperature does not exceed the maximum predefined threshold in the set time, status **ET273 becomes INACTIVE**.
INACTIVE	Status **ET273** is "**INACTIVE**" when the engine coolant temperature is below the maximum threshold authorised by the engine management computer after the engine has stopped.

AFTER REPAIR	Carry out another fault finding check on the system. Deal with any other faults. Clear the stored faults.

GETtheMANUALS.org

ET276	HEATING ELEMENTS

NOTES	**Special note:** Apply the conformity check to see if the statuses are consistent with the operating programs of the system.

Except VELSATIS Vdiag 04, but presence of heating elements on the vehicle

WITH	Status **ET276 Heating elements** is **WITH** when the vehicle is fitted with additional heating.
NONE	Status **ET276 Heating elements** is **WITHOUT** when the vehicle is not fitted with additional heating. If the vehicle is fitted with additional heating and heating element relays with status **ET276** set to **WITHOUT**, refer to the interpretation of the following statuses: **ET205 "Heating element no. 1 relay control",** **ET206 "Heating element no. 2 relay control",** **ET207 "Heating element no. 3 relay control".**

AFTER REPAIR	Carry out another fault finding check on the system. Deal with any other faults. Clear the stored faults.

GETtheMANUALS.org

ET341	IMMOBILISER CODE PROGRAMMED

NOTES	**Special note:** Apply the conformity check to see if the statuses are consistent with the operating programs of the system.

YES	Status **ET341** becomes **YES** if dialogue is possible between the UCH and the injection computer and the card code is recognised. Engine starting authorisation is only given if the code is recognised by the UCH computer, and status **ET003 Engine immobiliser** is **INACTIVE**.
NO	The code remains **NO** if dialogue between the UCH and the injection computer is not possible. Status **ET003 Engine immobiliser** is **ACTIVE**. The cause of the fault may be incorrect card programming (see **87G, Interconnection unit** and follow the **card programming** procedure. Where it does not stem from the card codes, perform a multiplex network test (see **88B, Multiplexing**). Where the fault finding procedure was performed by function, ensure that dialogue is present between the UCH, the Protection and Switching unit and the injection computer. If dialogue is not established, contact the Techline.

AFTER REPAIR	Carry out another fault finding check on the system. Deal with any other faults. Clear the stored faults.

GETtheMANUALS.org

ET413	CRUISE CONTROL/SPEED LIMITER FUNCTION

NOTES	**Special note:** Apply the conformity check to see if the statuses are consistent with the operating programs of the system.

INACTIVE	Status **ET413** is **INACTIVE** when no cruise control function button has been pressed and parameter **PR178 Cruise control switch voltage** becomes **5 V**.

SUSPEND	Status **ET413** is "**SUSPEND**" when cruise control button "**0**" is pressed and parameter **PR178 "Cruise control switch voltage"** should be **0.1 V**. This button is situated to the right of the steering wheel. If status **ET413** does not change to **SUSPEND**, check the **R/0** cruise control button, and the condition of its connector. Repair if necessary. **To be able to remove the driver's airbag and carry out the measures in complete safety (**see **88C, Airbag and pretensioners).** Repair if necessary. Measure the **resistance** of the following connection, **after pressing the "0" button**: If the resistance is not approximately **0 Ω**, check the continuity of the connection when the button is not pressed. If there is continuity, replace the "R/0" control button. Measure the **resistance of the following connection, after pressing the "0"** button: Diesel computer **track A 10** ⟶ "R/0" button **track A2** Diesel computer **track A 11** ⟶ "R/0" button **track A1** If the connection is broken, repair it.

AFTER REPAIR	Carry out another fault finding check on the system. Deal with any other faults. Clear the stored faults.

GETtheMANUALS.org

ET413 CONTINUED 1	

RESUME

Status **ET413** is "**RESUME**" when cruise control button "**R**" is pressed and parameter **PR178 "Cruise control switch voltage"** should be **3.76 V**. This button is situated to the right of the steering wheel.
If status **ET413** does not change to **RESUME**, check the **R/0** cruise control button, and the condition of its connector. Repair if necessary.
To be able to remove the driver's airbag and carry out the measures in complete safety (see **88C, Airbag and pretensioners).**
Repair if necessary.
Measure the **resistance** of the following connection, **after pressing the "R" button**:
If the resistance is not approximately **900 Ω**, check the continuity of the connection when the button is not pressed.
If there is continuity, replace the "R/0" control button.

Measure the **resistance** of the following connection, **after pressing the R button**:

Diesel computer **track A 10** ⟶ "R/0" button **track A2**

Diesel computer **track A 11** ⟶ "R/0" button **track A1**

If the connection is broken, repair it.

PLUS

Status **ET413** is "**PLUS**" when cruise control button "**+**" is pressed and parameter **PR178 "Cruise control switch voltage"** should be **2.4 V**. This button is situated to the left of the steering wheel.
If status **ET413** does not change to **PLUS**, check the condition of the **+/-** cruise control button, and the condition of its connector. Repair if necessary.
To be able to remove the driver's airbag and carry out the measures in complete safety (see **88C, Airbag and pretensioners).**
Repair if necessary.
Measure the **resistance** of the following connection, **after pressing the "+" button**:
If the resistance is not approximately **300 Ω**, check the continuity of the connection when the button is not pressed.
If there is continuity, replace the "R/0" control button.

Measure the **resistance** of the following connection, after pressing the "**+**" button:

Diesel computer **track A 10** ⟶ "+/-" button **track A2**

Diesel computer **track A 11** ⟶ "+/-" button **track A1**

If the connection is broken, repair it.

AFTER REPAIR	Carry out another fault finding check on the system. Deal with any other faults. Clear the stored faults.

GETtheMANUALS.org

ET413 CONTINUED 2	

MINUS	Status **ET413** is "**MINUS**" when cruise control button "**-**" is pressed and parameter **PR178 "Cruise control switch voltage"** should be **1.3 V**. This button is situated to the left of the steering wheel. If status **ET413** does not change to **MINUS**, check the condition of the **+/-** cruise control button, and the condition of its connector. Repair if necessary. **Refer to the airbag technical note that applies to the vehicle to be able to remove the driver's airbag and carry out the measures in complete safety (see 88C, Airbag and pretensioners)**. Repair if necessary. Measure the **resistance** of the following connection, **after pressing the "-" button**: If the resistance is not approximately **100 Ω**, check the continuity of the connection when the button is not pressed. If there is continuity, replace the "R/0" control button. Measure the **resistance** of the following connection, **after pressing the "-" button**: Diesel computer **track A 10** ⟶ "+/-" button **track A2** Diesel computer **track A 11** ⟶ "+/-" button **track A1** If the connection is broken, repair it.

AFTER REPAIR	Carry out another fault finding check on the system. Deal with any other faults. Clear the stored faults.

GETtheMANUALS.org

ET556	DRIVER'S DEACTIVATION OF THE CRUISE CONTROL/SPEED LIMITER

NOTES	**Special notes:** Apply the conformity check to see if the statuses are consistent with the operating programs of the system.

Note:
Cruise control can be activated when the vehicle speed exceeds **18 mph (30 km/h)**. Status **ET556** details 6 causes for cruise control deactivation.
IMPORTANT
To reinitialise the deactivations stored by the injection computer, use command RZ007 "Fault memory".

STATUS 1	**Brake pedal depressed**
	The cruise control function is deactivated each time the brake pedal is depressed. Status **ET556** becomes **STATUS 1**, when the vehicle is being driven, with cruise control active and the brake pedal depressed. If status **ET556** becomes "**STATUS 1**" without the brake pedal being depressed, consult the interpretation of statuses **ET012 "Primary brake contact"** and **ET013 "Secondary brake contact"**.

STATUS 2	**Traction control request**
	If the vehicle being diagnosed is fitted with traction control, the cruise control function is deactivated each time traction control is selected. Status **ET556** changes to **STATUS 2**, when driving, with cruise control active and traction control requested. If status **ET556** changes to **STATUS 2** without traction control request, refer to fault finding note relating to the vehicle's traction control system.

STATUS 3	**Suspend button pressed**
	Status **ET556** changes to **STATUS 3** when driving with Cruise control/Speed limiter active, if the driver presses the Cruise control/Speed limiter **0** button. If status **ET556** becomes **STATUS 3** without button **0** on the Cruise control/Speed limiter being pressed, consult the interpretation of status **ET413 Cruise control/Speed limiter function** and perform a fault finding procedure on control button **R/0** of the Cruise control/Speed limiter.

AFTER REPAIR	Carry out another fault finding check on the system. Deal with any other faults. Clear the stored faults.

GETtheMANUALS.org

ET556 CONTINUED	

STATUS 4	Clutch pedal depressed
	MANUAL GEARBOX ONLY The cruise control function is deactivated if the gearbox is no longer coupled to the engine (clutch pedal depressed). Status **ET556** becomes **STATUS 4** when driving, with cruise control active and the clutch pedal depressed. If status **ET556** becomes **STATUS 4** without the clutch pedal being depressed, consult the interpretation of status **ET233 Clutch pedal**.

STATUS 5	Gear lever in neutral position
	Status **ET556** changes to **STATUS 5**, when driving, with cruise control active and – if the driver puts the gear lever in neutral on a MANUAL GEARBOX without declutching or, – if gear lever is in neutral on an automatic transmission. This deactivates cruise control. If status **ET556** becomes **STATUS 5** without putting the gear lever in neutral on a manual gearbox without declutching, or without neutral on an automatic transmission, contact the Techline.

STATUS 6	Inconsistency between the request and the vehicle speed
	Status **ET556** changes to **STATUS 6** if the computer detects too great a difference between the speed requested by the driver and the vehicle speed. This may occur when driving, with cruise control active and where the difference between speeds is great. If status **ET556** changes to **STATUS 6** without a great difference in the speeds, contact the Techline.

AFTER REPAIR	Carry out another fault finding check on the system. Deal with any other faults. Clear the stored faults.

GETtheMANUALS.org

ET557	CRUISE CONTROL/SPEED LIMITER DEACTIVATION BY FUNCTION

NOTES	**Special notes:** Only perform these tests if the statuses do not correspond with the system programming functions.

Note:
Cruise control remains deactivated as long as the vehicle speed does not exceed **18 mph (30 km/h).** Status **ET557** details 4 causes for cruise control deactivation.
IMPORTANT
To reinitialise the deactivations stored by the injection computer, use command RZ007 "Fault memory".

STATUS 1	**Cruise control or speed limiter fault**
	If status **ET557** is "**STATUS 1**", refer to the interpretation of statuses **ET042 "Cruise control/speed limiter"** and **ET413 "Cruise control/speed limiter function"**, to test the components of the cruise control system and find the faulty one. If status **ET557** changes to **STATUS 1**, deal with the faults present or stored in the computer. If the fault is still present, contact Techline.

STATUS 2	**Fault detected by the injection computer**
	Status **ET557** changes to **STATUS 2** if the injection computer detects a fault on the injection system: – **faults in the engine speed sensor or camshaft,** – **accelerator pedal faults,** – **engine speed lower than 1000 rpm,** – **engine speed greater than 4700 rpm.** Carry out a multiplex network test, then an injection system test, and carry out fault finding on any faults. If the fault is still present, contact the Techline.

AFTER REPAIR	Carry out another fault finding check on the system. Deal with any other faults. Clear the stored faults.

GETtheMANUALS.org

ET557 CONTINUED	

STATUS 3	**Vehicle speed not refreshed**
	Status **ET557** becomes **STATUS 3** if the vehicle speed received by the computer does not vary. Carry out fault finding on the **ABS** computer. If faults are present (see **38C, Anti-lock braking system).** If the fault is still present, contact the Techline.

STATUS 4	**Invalid vehicle speed**
	Status **ET557** becomes **STATUS 4** if the vehicle speed received by the computer is invalid. Carry out fault finding on the **ABS** computer. If faults are present (see **38C, Anti-lock braking system).** If the fault is still present, contact the Techline.

AFTER REPAIR	Carry out another fault finding check on the system. Deal with any other faults. Clear the stored faults.

GETtheMANUALS.org

Tool Parameter	Diagnostic tool title
PR008	Rail pressure setpoint
PR017	Fuel flow
PR030	Accelerator pedal position
PR035	Atmospheric pressure
PR041	Turbocharging pressure
PR058	Air temperature
PR063	Fuel temperature
PR064	Coolant temperature
PR066	Oil temperature (Vdiag OC only)0
PR071	Computer feed voltage
PR079	Atmospheric pressure sensor voltage
PR080	Rail pressure sensor voltage
PR082	Fuel temperature sensor voltage
PR083	Air temperature sensor voltage
PR084	Coolant temperature sensor voltage
PR085	Oil temperature sensor voltage (Vdiag OC only)0
PR101	Duration of injection
PR130	Cruise control setpoint
PR136	EGR position
PR145	Engine speed
PR146	Inlet air flow

GETtheMANUALS.org

Tool Parameter	Diagnostic tool title
PR147	Pedal potentiometer voltage gang 1
PR148	Pedal potentiometer voltage gang 2
PR155	Vehicle speed
PR176	Preheating phase
PR178	Cruise control switch voltage (except VELSATIS Vdiag 04)
PR213	Rail pressure loop difference
PR215	Sensors feed voltage no. 1 (Pedal sensor supply gang 2 and turbocharging pressure sensor).
PR224	Turbocharging pressure sensor voltage
PR225	Air flow sensor voltage
PR342	Pedal sensor power supply gang 1
PR345	Turbocharger wastegate potentiometer voltage
PR346	Turbocharger wastegate valve position
PR364	Fuel flow correction - cylinder 1 (except VELSATIS Vdiag 04)
PR365	Fuel flow correction - cylinder 4 (except VELSATIS Vdiag 04)
PR405	Fuel flow correction - cylinder 2 (except VELSATIS Vdiag 04)
PR406	Fuel flow correction - cylinder 3 (except VELSATIS Vdiag 04)
PR407	Fuel flow correction - cylinder 5 (except VELSATIS Vdiag 04)
PR408	Fuel flow correction - cylinder 6 (except VELSATIS Vdiag 04)

GETtheMANUALS.org

NOTES	Commands are run to check that certain components are working properly or to carry out a replacement.

Tool command	Diagnostic tool title
RZ007	Fault memory
AC029	High pressure circuit sealing test (except VELSATIS Vdiag 04)
AC031	No. 3 immersion-heater relay
AC037	Preheating relay
AC038	Low-speed fan assembly relay
AC039	High-speed fan assembly relay
AC047	OBD warning light
AC063	Heating element no. 1 relay
AC064	Heating element no. 2 relay
AC068	Injection fault warning light
AC069	Severe injection fault warning light
AC079	Actuator static test
VP007	Decrease idling speed
VP011	Increase idling speed
VP010	Enter VIN
VP036	Fuel supply inhibited
VP037	Lift fuel supply inhibition

GETtheMANUALS.org

AC029	HIGH PRESSURE CIRCUIT SEAL TEST

NOTES	**This command is not available on VELSATIS Vdiag 04.** Ignition on, engine off.

Test condition:
– engine running at idling speed,
– engine temperature greater than **80 ˚C**
– automatic transmission in neutral
– accelerator pedal signal **0 %**,
– vehicle speed **0 mph**.
The test lasts for **60 seconds**, the engine speed will reach **2000 rpm** and the rail pressure will reach a minimum of **1450 bar**.
Carry out a visual inspection of the high pressure injection circuit to detect any fuel leaks.

GETtheMANUALS.org

AC031	HEATING ELEMENT NO. 3 RELAY

NOTES	**No fault should be present or stored:** Carry out this fault finding procedure in the event of a malfunction detected in the actuator control menu or a fault in the passenger compartment heating/demisting system. Consult the **Wiring Diagrams** Technical Note for your vehicle to locate the fuses and relays (see **Technical Note 8247 or 8248, Wiring diagrams, 777**).

If heating element no. 3 relay does not operate during command **AC031**.
Check the connections of heating element no. 3 relay mounting.
Check the engine management computer connections.
Repair if necessary.

If the fault is still present, check as follows that this relay is controlled by the engine management computer:
– disconnect the heating element no. 3 relay, place the **50 Ω** and **100 Ω** resistor on its mounting in place of the coil and connect a voltmeter:
  positive terminal to **+ 12 V** battery,
  negative terminal on **track 37** of the heating element no. 3 relay mounting.
– clear the fault and run command **AC031**.
– if the voltmeter shows the correct battery voltage, replace heating element no. 3 relay.
– If the voltmeter does not indicate the battery voltage, contact your Techline.

If heating element no. 3 relay operates with command AC031, but there is still a passenger compartment heating/demisting fault. Check using the wiring diagram:
– the conformity of the heating element fuse,
– the presence of the **+ 12 V** battery feed on **track 35** of the heating element no. 3 relay mounting,
– the conformity of the heating element no. 3 relay,
– the conformity of the heating element resistance,
– the presence of earth at the water chamber (heating element mounting).
– Also check the level of the cooling circuit and that there are no leaks.
Carry out the necessary repairs.

GETtheMANUALS.org

AC037	PREHEATING RELAY

NOTES	This command is only carried out if the fault **DF186 Heater plugs circuit**, or **DF262 and DF263 Heater plugs 1 and 2 group circuit** is present or stored and if no other fault is present. Consult the **Wiring Diagrams** Technical Note for your vehicle to locate the fuses and relays (**Technical Note 8247 or 8248, Wiring diagrams, 777**).

Before applying the following fault finding procedure, check that the battery voltage is not below 12 V.

Step 1:
Using a multimeter fitted with a current clamp, group the 4 heater plug supply wires together.
Control the preheating relay using command **AC037** and measure the current used by the heater plugs.
If the current consumed is not between **60 A** and **80 A**, go to step 2.

Step 2:
Check the connections on the preheating unit, heater plugs and diesel computer.
Repair if necessary.
Measure **the resistance** of the heater plugs.
If the resistance is greater than **30 Ω**, replace the faulty plugs.

Check the **continuity** and **absence of interference resistance** of the following connections:

Pre-postheating unit, white connector, **track 1**	→	Heater plug no. 1 **track 1**
Pre-postheating unit, purple connector, **track 1**	→	Heater plug no. 2 **track 1**
Pre-postheating unit, white connector, **track 2**	→	Heater plug no. 3 **track 1**
Pre-postheating unit, purple connector, **track 2**	→	Heater plug no. 4 **track 1**
Pre-postheating unit, white connector, **track 6**	→	Heater plug no. 5 **track 1**
Pre-postheating unit, purple connector, **track 6**	→	Heater plug no. 6 **track 1**

Check the condition of the **F12 (70A)** fuse which supplies the preheating unit. Replace it if necessary.
Then check for **+ 12 V** on **track 3** of the preheating relay.

Check the **continuity** and **absence of interference resistance** of the following connections:

Diesel computer **track A 19**	→	Pre-postheating unit **green connector, track 8**
Diesel computer **track A 49**	→	Pre-postheating unit **green connector, track 9**
Diesel computer **track A 68**	→	Pre-postheating unit, purple connector, **track 9**

If the fault is still present, replace the pre-postheating unit.

GETtheMANUALS.org

AC038	LOW-SPEED FAN UNIT RELAY

NOTES	**No fault should be present or stored:** Perform this fault finding procedure if a malfunction is detected in the actuator command menu or after an engine cooling system or air conditioning fault.' Consult the **Wiring Diagrams** Technical Note for your vehicle to locate the fuses and relays (**Technical Note 8247 or 8248, Wiring diagrams, 777**).

If the low speed fan unit relay does not operate when command **AC038** is run:
Check the low speed fan relay mounting and the connections of the engine management computer.
Repair if necessary.

If the fault is still present, check that the relay is actuated by the engine management computer as follows:
– Disconnect the "low speed fan unit" relay and place a resistor of **50 Ω** to **100 Ω** on the relay mounting in place of the coil and link up a voltmeter as follows:
  positive terminal to **+ 12 V** battery,
  negative terminal on **track 11** of the "low-speed fan unit relay" mounting.
– clear the fault and run command **AC038**,
– if the voltmeter indicates the battery voltage, replace the relay,
– If the voltmeter does not indicate the battery voltage, contact your Techline.

Check that the low speed fan unit relay **coil** is not cut and that the contacts are operational.
Replace the relay if necessary.

If the "low speed fan unit" relay operates but there remains a fan unit triggering fault, check the following using the wiring diagram:
– the conformity of the fan unit fuse,
– the conformity of the "low speed fan unit" relay,
– the conformity of the low speed resistance,
– Check the **continuity, insulation from + 12 V and the absence of interference resistance** of the following connection:

Diesel computer **track A 18** ⟶ Low speed fan relay **track 11**

– check for **insulation from earth, continuity and absence of interference resistance** on the following connections:

Diesel computer **track A 1** ⟶ Low speed fan relay **track 10**

Diesel computer **track A 2** ⟶ Low speed fan relay **track 10**

Carry out the necessary repairs.

GETtheMANUALS.org

AC039	HIGH-SPEED FAN ASSEMBLY RELAY

NOTES	**No fault should be present or stored:** Perform this fault finding procedure if a malfunction is detected in the actuator command menu or after an engine cooling system or air conditioning fault.' Consult the **Wiring Diagrams** Technical Note for your vehicle to locate the fuses and relays (**Technical Note 8247 or 8248, Wiring diagrams, 777**).

If the high speed fan unit relay does not operate when command **AC039** is run:
Check the high speed fan unit relay mounting and the connections of the engine management computer.
Repair if necessary.

If the fault is still present, check that the relay is actuated by the engine management computer as follows:
– disconnect the "high speed fan assembly" relay, mount a resistor of **50 Ω** to **100 Ω** on the relay mounting in place of the coil, and connect a voltmeter as follows:
  positive terminal to **+ 12 V** battery,
  negative terminal on **track 11** of the "high speed fan assembly" relay mounting,
– clear the fault and run command **AC039**
– if the voltmeter indicates the battery voltage, replace the relay,
– If the voltmeter does not indicate the battery voltage, contact your Techline.

Check that the high speed fan unit relay **coil** is not cut and that the contacts are operational.
Replace the relay if necessary.

If the "high-speed fan unit" relay is actuated, but the fan still does not trigger, check the following using the wiring diagram:
– the conformity of the fan unit fuse,
– the conformity of the "high speed fan unit" relay,
– the conformity of the low speed resistance,
– Check the **insulation from + 12 V, continuity, and the absence of interference resistance** of the following connection:

Diesel computer **track A 38** → **track 7** of the fan assembly relay

Fan unit relay **track 7** → High speed relay **track 60**

– check for **insulation from earth, continuity and absence of interference resistance** on the following connections:

Diesel computer **track A 1** → Fan unit relay **track 6**

Fan unit relay **track 6** → High speed fan relay **track 62**

Diesel computer **track A 2** → Fan unit relay **track 6**

Fan unit relay **track 6** → High speed fan relay **track 62**

Carry out the necessary repairs.

GETtheMANUALS.org

AC063	HEATING ELEMENT RELAY NO. 1

NOTES	**No fault should be present or stored:** Carry out this fault finding procedure in the event of a malfunction detected in the actuator control menu or a fault in the passenger compartment heating/demisting system. Consult the **Wiring Diagrams** Technical Note for your vehicle to locate the fuses and relays (see **Technical Note 8247 or 8248, Wiring diagrams, 777**).

If the heating element no. 1 relay does not operate during command **AC063**:
Check the connections of the heating element no. 1 relay mounting.
Check the engine management computer connections.
Repair if necessary.

If the fault is still present, check as follows that this relay is controlled by the engine management computer:
– Disconnect the heating element no. 1 relay, place the **50 Ω** and **100 Ω** resistor on its mounting in place of the coil and connect a voltmeter:
  positive terminal to **+ 12 V** battery,
  negative terminal on **track 65** of the heating element no. 1 relay mounting,
– clear the fault and run command **AC063**,
– if the voltmeter shows the correct battery voltage, replace the heating element no. 1 relay.
– If the voltmeter does not indicate the battery voltage, contact your Techline.

If heating element no. 1 relay operates with command **AC063**, but there is still a passenger compartment heating/demisting fault. Check using the wiring diagram:
– the conformity of the heating element fuse,
– the presence of the **+ 12 V** battery on **track 63** of the heating element no.1 relay mounting,
– the conformity of the heating element no. 1 relay,
– the conformity of the heating element resistance,
– the presence of earth at the water chamber (heating element mounting).
– Also check the level of the cooling circuit and that there are no leaks.
Carry out the necessary repairs.

GETtheMANUALS.org

AC064	heating element RELAY NO. 2

NOTES	**No fault should be present or stored:** Carry out this fault finding procedure in the event of a malfunction detected in the actuator control menu or a fault in the passenger compartment heating/demisting system. Consult the **Wiring Diagrams** Technical Note for your vehicle to locate the fuses and relays (see **Technical Note 8247 or 8248, Wiring diagrams, 777**).

If heating element no. 2 relay does not operate during command **AC064**.
Check the connections of heating element no. 2 relay mounting.
Check the engine management computer connections.
Repair if necessary.

If the fault is still present, check as follows that this relay is controlled by the engine management computer:
– disconnect the heating element no. 2 relay, place the **50 Ω** and **100 Ω** resistor on its mounting in place of the coil and connect a voltmeter:
  positive terminal to **+ 12 V** battery,
  negative terminal on **track 3** of the additional heater no. 2 relay mounting,
– clear the fault and run command **AC064**.
– if the voltmeter shows the correct battery voltage, replace heating element no. 2 relay.
– If the voltmeter does not indicate the battery voltage, contact your Techline.

If heating element no. 2 relay operates with command **AC064**, but there is still a passenger compartment heating/demisting fault. Check using the wiring diagram:
– the conformity of the heating element fuse,
– the presence of the **+ 12 V** battery feed on **track 2**of the heating element no. 2 relay mounting,
– the conformity of the heating element relay no. 2,
– the conformity of the heating element resistance,
– the presence of earth at the water chamber (heating element mounting).
– Also check the level of the cooling circuit and that there are no leaks.
Carry out the necessary repairs.

GETtheMANUALS.org

AC068	INJECTION FAULT WARNING LIGHT

NOTES	Perform this fault finding in the event of a malfunction detected in the actuator command menu.

With the ignition on and the engine stopped, the **SERVICE** injection fault warning light should flash and the message **Check injection** be displayed on the instrument panel.

Check the instrument panel connections.
Check the engine management computer connections.
Repair if necessary.
Using the wiring diagram.
– check the **continuity and absence of interference resistance** on the following connection:

Diesel computer **track A 67** ⟶ Transparent connector on the instrument panel **track 16**

– Check for **+ 12 V** battery on **track 4** of the instrument panel black connector.

If the fault is still present, check that the warning light is actuated by the engine management computer as follows:
Disconnect the connector from the instrument panel and connect a voltmeter as follows:
– positive terminal on **+ 12 V**,
– negative terminal on **track 24**, transparent connector on the instrument panel.
Activate the warning light using command **AC068**.

- If the voltmeter shows the battery voltage, then check the instrument panel. Carry out the necessary repairs.
- If the voltmeter does not indicate the battery voltage, contact your Techline.

GETtheMANUALS.org

AC069	SEVERE INJECTION FAULT WARNING LIGHT

NOTES	Perform this fault finding in the event of a malfunction detected in the actuator command menu.

With the ignition on and the engine stopped, the **STOP** serious injection fault warning light should flash and the message **Injection fault: stop the engine** be displayed on the instrument panel.

Check the instrument panel connections.
Check the engine management computer connections.
Repair if necessary.
Using the wiring diagram.
– check the **continuity and absence of interference resistance** on the following connection:

Diesel computer **track A 67** → Transparent connector on the instrument panel **track 16**

– Check for **+ 12 V** battery on **track 4** of the instrument panel black connector.

If the fault is still present, check that the warning light is actuated by the engine management computer as follows:
Disconnect the connector from the instrument panel and connect a voltmeter as follows:
– positive terminal on **+ 12 V**,
– negative terminal on **track 24**, transparent connector on the instrument panel.
Activate the warning light using command **AC069**.

- If the voltmeter shows the battery voltage, then check the instrument panel. Carry out the necessary repairs.
- If the voltmeter does not indicate the battery voltage, contact your Techline.

GETtheMANUALS.org

AC079	ACTUATOR STATIC TEST

NOTES	Ignition on, engine off.

This command allows you to display faults on these actuators (if fault present) without starting the engine.
The diesel computer will carry out the following electrical checks:

- **turbocharger solenoid valve,**
- **EGR valve,**
- **the two rail pressure regulation solenoid valves,**
- **The 6 injectors.**

GETtheMANUALS.org

VP036	INHIBIT FUEL SUPPLY

NOTES	Ignition on, engine off.

This command allows the injectors to be locked, so that starting is not possible.
The command **VP036** enables the cylinder compression to be checked in complete safety.
Run command **VP036** and perform a vehicle starting sequence.
Check the cylinder compressions then, once this is done, reestablish control of the injectors using command **VP037 "Stop fuel supply inhibition"** or by switching of the ignition for more than **40 seconds**.

GETtheMANUALS.org

VP037	CANCEL FUEL SUPPLY INHIBITION

NOTES	Ignition on, engine off.

The command allows the supply to the injectors to be re-established, following an engine compression test.
Run command **VP037**, and try to start the vehicle.
If the vehicle does not start, start the procedure again.

GETtheMANUALS.org

NOTES	Only check the customer complaint after performing a complete check with the **diagnostic tool**.

THE ENGINE DOES NOT TURN OVER WHEN THE STARTER IS OPERATED	→ **ALP1**
THE ENGINE TURNS OVER TOO SLOWLY WHEN THE STARTER IS OPERATED	→ **ALP1**
THE ENGINE TURNS OVER BUT DOES NOT START	→ **ALP2**
THE ENGINE STARTS BUT DOES NOT ACCELERATE OR STALLS	→ **ALP2**
ENGINE BUCKING	→ **ALP3**
ROUGH IDLE	→ **ALP4**
OVERHEATING	→ **ALP5**
THE ENGINE DOES NOT REACH ITS OPERATING TEMPERATURE	→ **ALP6**
THE ENGINE TAKES TIME TO REACH ITS OPERATING TEMPERATURE	→ **ALP6**
EXCESSIVE FUEL CONSUMPTION	→ **ALP7**
LOSS OF POWER	→ **ALP7**
EXCESSIVE OIL CONSUMPTION	→ **ALP8**

GETtheMANUALS.org

NOTES	Only check the customer complaint after performing a complete check with the **diagnostic tool**.

MAJOR VIBRATIONS	→ **ALP9**
HEAVY BLACK SMOKE FROM EXHAUST	→ **ALP10**
HEAVY WHITE SMOKE FROM EXHAUST	→ **ALP11**
HEAVY BLUE SMOKE FROM EXHAUST	→ **ALP12**
NO DIALOGUE WITH ENGINE MANAGEMENT COMPUTER	→ **ALP13**

GETtheMANUALS.org

ALP1	**The engine does not turn over when the starter is operated** **The engine does not turn over when the starter is operated**

NOTES	In the event of a fault, perform a **multiplex network test** using the diagnostic tool, then if the test is OK, apply the conformity check before any operation on the diesel injection system.

Check **the battery charge**.
Check **the condition of the battery connections**.
Check that there is no corrosion on the engine earth straps.
Check for the presence of faults with the diagnostic tool, deal with these first.
Repair if necessary.

Check the starter motor connections.
Check that a **+ 12 V** voltage is present on the starter motor terminal during starter action.
Check starter motor operation.
Repair if necessary.

Check that oil is present in the crankcase to avoid any engine seizing.
Check that the crankshaft is not locked by performing a crankshaft rotation.

Permanent seizing may be due to:

1) Seizure of equipment driven by the accessories belt: remove the accessories belt and check that all the equipment driven by the accessories belt is rotating correctly.
2) Seizure of the crankshaft itself, due to filling of the cylinders with a fluid (diesel fuel, coolant, etc.): remove the heater plugs to check that there is no fluid inside the combustion chambers.
   The presence of diesel fuel in the combustion chambers may be due to a permanent opening of the injectors: check that the injector power unit (EDU*) is operating correctly.
   The presence of a fluid such as coolant fluid or engine oil shows failure of the cylinder head gasket or a crack in one of the components forming the cylinder head or the engine cylinders.
2) Destruction of the timing belt, causing damage to the timing system components.
3) Seizure of the automatic transmission: remove the transmission to check whether the flywheel is released again.
5) Damage to moving parts requiring replacement of the engine.

*EDU: Electronic Drive Unit

AFTER REPAIR	Carry out a road test, followed by a check with the fault finding tool.

GETtheMANUALS.org

ALP2	The engine turns over but does not start The engine starts but does not accelerate or stalls

NOTES	In the event of a fault, perform a **multiplex network test** using the diagnostic tool; if this is OK, carry out a **UCH test** and **immobiliser** test.

– Check the operation of the pre-heating plugs.
– Check for fuel in the tank.
– Ensure that the correct fuel is being used. Run **test 12 Fuel conformity check**.

Remove the diesel filter and check its condition.
Check that there is no paraffin crystallised in the low pressure fuel pipes following freezing.
Rinse the fuel circuit and replace the fuel and the diesel filter if necessary.
If metal deposits are present at the bottom of the container, a serious fault in the injection system has occurred.
These particles may have entered the high pressure injection system and may foul the injectors, causing them to seize.
In this case, the entire injection system must be replaced (High Pressure Pump, Injection rail, Injectors, High pressure injector pipe, etc.).

Run fault finding on the diesel injection system using the diagnostic tool, deal with the other faults.

Check the condition of the air inlet circuit and make sure there is no obstruction in the inlet circuit.
Check for possible seizing of the turbocharger shaft.

Inhibit injection using command **VP036 Inhibit fuel supply**.
Measure the rail pressure using the parameter **PR038 Rail pressure** while the starter motor is operated (less than **10 seconds** per test).The pressure should be greater than **170 bar** and the engine speed signal should be greater than **250 rpm** at an air temperature of **20˚C**.
IMPORTANT
If the air temperature is less than **20˚C**, the engine speed signal should not be less than **250 rpm**.

AFTER REPAIR	Carry out a road test, followed by a check with the fault finding tool.

GETtheMANUALS.org

ALP2 CONTINUED	

– Check the valve clearance,
– check the condition of the engine, measure the cylinder compression with a compression gauge.
The compression values recorded for each injector must be the same.
– The minimum compression limit must not be less than **20.4 kg/cm^2**.
(1 bar = 1.0197 kg/cm^2),
– if the compression test reveals a cylinder fault, carry out the necessary repairs,
– if the compression values are OK, check the conformity of the injector assembly using the procedure described in the **Workshop Repair Manual**.

If a mechanical operation has occurred beforehand on the injection pump, check the conformity of the pump pulley fitting (recommendation of target positioning).

For all Vdiags except VELSATIS Vdiag 04:
Check the fuel regulation injector by injector by performing **test: 10 Incorrect injector operation**.
If the customer complaint is still present, replace the injector.

AFTER REPAIR	Carry out a road test, followed by a check with the fault finding tool.

GETtheMANUALS.org

ALP3	Engine hesitation

NOTES	In the event of a fault, perform a **multiplex network test** using the diagnostic tool, then if the test is OK, apply the conformity check before any operation on the diesel injection system.

– Check for fuel in the tank. – Ensure that the correct fuel is being used. Run **test 12 Fuel conformity check**.
Remove the diesel filter and check its condition. Check that there is no paraffin crystallised in the low pressure fuel pipes following freezing. Rinse the fuel circuit and replace the fuel and the diesel filter if necessary. If metal deposits are present at the bottom of the container, a serious fault in the injection system has occurred. These particles may have entered the high pressure injection system and may foul the injectors, causing them to seize. In this case, the entire injection system must be replaced (High Pressure Pump, Injection rail, Injectors, High pressure injector pipe, etc.).
Check the condition of the air inlet circuit and make sure there is no obstruction in the inlet circuit. Check for possible seizing of the turbocharger shaft.
Measure the rail pressure using parameter **PR038 Rail pressure** during the phases of engine hesitation. The rail pressure should have stable values for a stabilised engine speed, and the rail pressure loop difference should not exceed **± 40 bar**. If the fault is still present, run **test 3 Low pressure circuit check**. Rail pressure instability may be due to seizure of the regulation solenoid valves or a failure of the high pressure pump. If the fault is still present, run **test 11 High pressure pump**.
If the fault is still present, run **test 10 Poor injector operation**.

AFTER REPAIR	Carry out a road test, followed by a check with the fault finding tool.

GETtheMANUALS.org

ALP4	Rough idle

NOTES	In the event of a fault, perform a **multiplex network test** using the diagnostic tool, then if the test is OK, apply the conformity check before any operation on the diesel injection system.

– Check for fuel in the tank. – Ensure that the correct fuel is being used. Run **test 12 Fuel conformity check**.
Check the condition of the air inlet circuit and make sure there is no obstruction in the inlet circuit. Check for possible seizing of the turbocharger shaft.
Check the resistance of the exhaust gas recirculation valve and check if the slide of the valve is seized.
Measure the rail pressure using parameter **PR038 Rail pressure** while the engine is running in an unstable manner; the rail pressure should have stable values for a stabilised engine speed, and the rail pressure variation should not exceed **± 40 bar**. Rail pressure instability may be due to seizing of the regulation solenoid valves or a failure of the high pressure pump. Remove the diesel filter and check its condition. Rinse the fuel circuit and replace the fuel and the diesel filter if necessary.
For all Vdiags except VELSATIS Vdiag 04: If the fault is still present, change the regulation solenoid valves or the diesel fuel pump or the injectors. Check status **ET038 Engine**, if **ET038** is **NORMAL**, check the statuses of the following combustion misfires: **ET057 Misfire on cylinder 1,** **ET058 Misfire on cylinder 2,** **E T059 Misfire on cylinder 3,** **ET060 Misfire on cylinder 4,** **ET274 Misfire on cylinder 5,** **ET275 Misfire on cylinder 6** using the diagnostic tool. If one of the misfire statuses is **DETECT** or **PRESENT**, run **TEST 10 Poor injector operation**. If the unstable idle speed fault is still present, check **the condition** and **correct operation** of the diesel fuel pump. Replace or repair if necessary.

***AFTER** REPAIR*	Carry out a road test, followed by a check with the fault finding tool.

GETtheMANUALS.org

ALP5	Overheating

NOTES	In the event of a fault, perform a **multiplex network test** using the diagnostic tool, then if the test is OK, apply the conformity check before any operation on the diesel injection system.

Run fault finding on the injection computer using the diagnostic tool. Deal with all present faults. Using commands **A C038 Low speed fan relay** and **A C039 High speed fan relay** check that the cooling fan speeds are correct. Repair if necessary. Check that the cooling circuit is correctly filled.
Check correct opening of the thermostat (start of opening at **82˚C** - fully open at **88˚C**). For an engine temperature greater than **85˚C** the bottom hose of the cooling radiator should not be cold; replace the thermostat if necessary.
Check that the water pump is operating correctly by checking the presence of a coolant fluid return flow from the expansion bottle. In the event of a fault, check for possible clogging of the return path from the expansion bottle before performing a fault finding test for a water pump failure.
Compare the temperature values given by the injection coolant temperature sensor and the value given by an external temperature sensor. If the values are inconsistent, replace the coolant temperature sensor.
If the fault is still present, rinse the cooling circuit and check that the radiator is not clogged. Clean the front of the radiator with a high pressure cleaner to remove any dirt from the radiator fins. Replace the expansion bottle cap.

***AFTER** REPAIR*	Carry out a road test, followed by a check with the fault finding tool.

GETtheMANUALS.org

ALP6	The engine does not reach its operating temperature The engine takes time to reach its operating temperature

NOTES	In the event of a fault, perform a **multiplex network test** using the diagnostic tool, then if the test is OK, apply the conformity check before any operation on the diesel injection system.

Run fault finding on the injection computer using the diagnostic tool. Process all the present or stored faults.
Check that the engine does reach its operating temperature during motorway driving.
Check that the themoplungers are operating correctly. Check their resistances and check that the 3 thermoplunger relays are supplied using the following commands: **AC063 Thermoplunger no.1 relay,** **AC064 Thermoplunger no.2 relay,** **AC031 Thermoplunger no.3 relay.** In the event of faults, check the operation of the thermoplunger plug relays, check the connection between the relay coils and the diesel computer, check the power supply to the relay terminals, and check the **continuity** of the power lines between the thermoplungers and their relays.
Engine cold or stopped for at least **6 hours**. Compare the temperature values given by the injection coolant temperature sensor and the value given by an external temperature sensor. If the values are inconsistent, replace the coolant temperature sensor.
If the value supplied by the injection coolant temperature sensor is correct, replace the thermostat.
Refer to **Technical Note 3175A, Cooling system, ALP7 There is no heating inside the vehicle**.

***AFTER** REPAIR*	Carry out a road test, followed by a check with the fault finding tool.

GETtheMANUALS.org

ALP7	Excessively high fuel consumption Loss of power

NOTES	In the event of a fault, perform a **multiplex network test** using the diagnostic tool, then if the test is OK, apply the conformity check before any operation on the diesel injection system.

IMPORTANT In the event of the engine overheating (Oil temperature > 123˚C), the computer deliberately limits the engine power and vehicle speed without illuminating a warning light, see the interpretation of fault **DF769 Oil temperature**.
Check conformity of the tyres and their pressure.
Check that the vehicle is not equipped with external devices affecting its aerodynamics.
Look for possible fuel leaks: – Run **test 3 Low pressure circuit check**. Repair if necessary. – Run command **AC029 High pressure circuit sealing test (Except VELSATIS Vdiag 04)**. Carry out a visual inspection of the high pressure injection circuit to detect any fuel leaks. Repair if necessary.
Check the condition of the air filter and replace it if necessary.
Check that the entire inlet circuit is in good condition, free of leaks and is not clogged (hose and intercooler, air flowmeter clogging), apply **test 5 Air flowmeter**.
Check the air flow value using parameters **P R146 Inlet air flow** and **P R136 EGR valve position**. At a speed of **700 rpm** and with a coolant temperature of **80˚C**, check that the air flow is **42 kg/h ± 4.2 kg/h** at an EGR valve position of **3.2 mm** and **72.3 kg/h ± 7.2 kg/h** at an EGR valve position of **0 mm**.
Check that the engine does reach its operating temperature during motorway driving.
Reset the trip computer and perform a new test on the motorway and then in town, and estimate the vehicle's consumption from its average speed.

***AFTER** REPAIR*	Carry out a road test, followed by a check with the fault finding tool.

GETtheMANUALS.org

ALP7 CONTINUED	

Check that the exhaust pipe is not blocked, apply **test 1 Exhaust system check**.
Check that the turbocharger operates correctly. – Run **test 7 Variable geometry turbocharger command** and – Run **test 8 Turbocharger rotating part**. Repair if necessary.
If the vehicle lacks power, run **test 11 High pressure pump**.
Run **TEST 10 Poor injector operation (Except VELSATIS Vdiag 04)**.
– Check the valve clearance, – check the condition of the engine, measure the cylinder compression with a compression gauge. The compression values recorded for each injector must be the same. – The minimum compression limit must not be less than **20.4 kg/cm^2**. **(1 bar = 1.0197 kg/cm^2)** – If the compression test reveals a cylinder fault, carry out the necessary repairs. – if the compression values are OK, check the conformity of the injector assembly using the procedure described in the **Workshop Repair Manual**.

***AFTER** REPAIR*	Carry out a road test, followed by a check with the fault finding tool.

GETtheMANUALS.org

ALP8	Excessive oil consumption

NOTES	In the event of a fault, perform a **multiplex network test** using the diagnostic tool, then if the test is OK, apply the conformity check before any operation on the diesel injection system.

Check that the oil level is correct, and remove the excess if necessary. Check for possible external leaks. Repair if necessary.
Check the air circuit: – the condition of the air filter, – run **test 4 Air inlet circuit and turbocharging check**.
Check that the turbocharger operates correctly. Run **test 8 Turbocharger rotating part**.
Check the sealing of the engine block and turbocharger lubrication pipes, and the pipes and oil cooler. Repair if necessary.
Check that the oil breather pipes are not crushed or clogged.
Remove the inlet tract from the turbocharger inlet and outlet, and check that there is not a large quantity of oil in the turbocharger or in the inlet hoses. – A large quantity of oil in the turbocharger inlet hose is due to extensive oil evacuation via the oil breather (engine wear or breather clogged, etc.), – A large quantity of oil in the turbocharger outlet hose indicates failure of the turbine shaft sealing ring. Replace the turbocharger if necessary.
Check the correct condition of the heater plugs. Repair or replace the faulty components, if necessary.

***AFTER** REPAIR*	Carry out a road test, followed by a check with the fault finding tool.

GETtheMANUALS.org

ALP9	Major vibration

NOTES	In the event of a fault, perform a **multiplex network test** using the diagnostic tool, then if the test is OK, apply the conformity check before any operation on the diesel injection system.

Run fault finding on the injection computer using the diagnostic tool. Process all the present or stored faults.
Check the condition and tightness of the engine mountings.
Check the accessories drive pulley. The rubber mounting bushes should be in perfect condition and the pulley should not warp during rotation; replace if necessary.
Remove the accessories belt and start the engine. If the vibration has disappeared, look for the faulty component among the accessories driven by the belt.
Remove the starter motor and check that the automatic transmission torque converter is correctly tightened.
Check timing belt adjustment.
If the fault is still present, change the regulation solenoid valves or the diesel fuel pump or the injectors. **For all Vdiags except VELSATIS Vdiag 04:** Check status **ET038 Engine**, if **ET038** is **NORMAL**, check the statuses of the following combustion misfires: **ET057 Misfire on cylinder 1,** **ET058 Misfire on cylinder 2,** **E T059 Misfire on cylinder 3,** **ET060 Misfire on cylinder 4,** **ET274 Misfire on cylinder 5,** **ET275 Misfire on cylinder 6** using the diagnostic tool. If one of the misfire statuses is **DETECT** or **PRESENT**, run **TEST 10 Poor injector operation**. If the unstable idle speed fault is still present, check **the condition** and **correct operation** of the diesel fuel pump. Replace or repair if necessary.

***AFTER** REPAIR*	Carry out a road test, followed by a check with the fault finding tool.

GETtheMANUALS.org

ALP10	Heavy black smoke from exhaust

NOTES	If the vehicle has not been used for a long time, let the engine reach its operating temperature and, after first checking the coolant fluid level, carry out a road test.

Run fault finding on the diesel injection using a diagnostic tool. Deal with any fault detected.
Check that the whole inlet system is neither clogged nor leaky. Check the condition of the air filter and replace if necessary.
Check that the exhaust gas recirculation valve is not stuck open. Replace it, if necessary.
Remove the inlet hose from the turbocharger inlet and check that the turbine shaft rotates very freely. Check that the turbocharger axial and lateral play values are within tolerances.
Check for possible seizing of the turbocharger wastegate in the open position, and replace the turbocharger if necessary (turbocharger seizing may be due to poor lubrication of the bearings: check for possible clogging of the lubrication circuit and check the engine oil pressure). If the fault is still present, run **test 10 Incorrect operation of the injectors**.

***AFTER** REPAIR*	Carry out a road test, followed by a check with the fault finding tool.

GETtheMANUALS.org

ALP11	Heavy white smoke from exhaust

NOTES	If the vehicle has not been used for a long time, let the engine reach its operating temperature and, after first checking the coolant fluid level, carry out a road test.

Check with the customer that the vehicle has not overheated recently.
Check the coolant fluid level. A sharp drop in this level is due to a cooling circuit leak or to fluid consumption by the engine at the cylinder head gasket. Apply **Technical Note 3175A, Cooling circuit, ALP3 Emission of smoke from the exhaust, white smoke, engine warm**.
Run the engine at idle speed until its operating temperature is reached, with the expansion bottle cap in place. If the vehicle emits white smoke from the exhaust, slowly loosen the expansion bottle cap to reduce the pressure in the cooling circuit. If the vehicle stops emitting smoke, one of the cylinder head gaskets is damaged. Replace both the cylinder head gaskets.
If not, check that there is no water in the diesel filter. Ensure that the correct fuel is being used. Run **test 12 Fuel conformity check**.

***AFTER** REPAIR*	Carry out a road test, followed by a check with the fault finding tool.

GETtheMANUALS.org

ALP12	Heavy blue smoke from exhaust

NOTES	If the vehicle has not been used for a long time, let the engine reach its operating temperature and, after first checking the coolant fluid level, carry out a road test.

Run fault finding on the diesel injection using a diagnostic tool.
Deal with any fault detected.

Top up the oil level, and if the level is too high remove the excess.
If the level is too low, refer to **ALP8 Excessive oil consumption**.

Check that the oil breather pipes are not crushed or clogged.

Remove the inlet hose from the turbocharger inlet and outlet.
Check that there is not a large quantity of oil in the turbocharger or the inlet hoses.

- A large quantity of oil in the turbocharger inlet hose is due to extensive oil evacuation via the oil breather (engine "sealing ring" wear or breather clogged, etc.).
- A large quantity of oil in the turbocharger outlet hose indicates failure of the turbine shaft sealing ring. Replace the turbocharger if necessary.
- if the inlet system is clean, a small quantity of oil deposited on the walls of the inlet hoses is acceptable. The oil consumption is undoubtedly due to an engine internal failure, e.g. valve stem seal, oil scraper ring, etc.

***AFTER** REPAIR*	Carry out a road test, followed by a check with the fault finding tool.

GETtheMANUALS.org

ALP 13	No dialogue with engine management computer

NOTES	In the event of a fault, perform a **multiplex network test** using the diagnostic tool.

Check that the tool is not the cause of the fault by trying to establish dialogue with a computer on another vehicle.
If the tool is not at fault, and dialogue cannot be established with any other computer on the same vehicle, it may be that a faulty computer is disrupting **line K**.
Trace which one through a process of elimination, successively disconnecting each computer.
Also check the battery voltage following interpretation of parameter **PR071 Computer supply voltage**.

Check the condition of the engine fuses in the engine fuse and relay box; refer to the **Wiring Diagrams** Technical Note for the vehicle.
Check the computer power supply on the connector side.
Check the earth connections.
Check the computer connector (crimping of wires to terminals, and condition of terminals).
If the connection or connections are faulty and if there is a repair procedure (see **Technical Note 6015A, Electrical wiring repair, Wiring: Precautions for repair**), repair the wiring, otherwise replace the wiring.

Check the supply to the diagnostic socket:
+ Before ignition feed on **track 24**.
+ After ignition feed on **tracks 1 and 2**.
Earth on **tracks 4** and **5**.
Ensure **the continuity** and **the insulation** of the following connection:

Diesel computer **track A 50** ⟶ **track 7** of the diagnostic socket

If the connection or connections are faulty and if there is a repair procedure (see **Technical Note 6015A, Electrical wiring repair, Wiring: Precautions for repair**), repair the wiring, otherwise replace the wiring.
If dialogue is still impossible after these checks, replace the engine management computer.
If necessary, modify the configuration of the new computer to match the equipment options available on the vehicle.

***AFTER** REPAIR*	Carry out a road test, followed by a check with the fault finding tool.

GETtheMANUALS.org

EXHAUST SYSTEM CHECK	→ TEST1
LOW PRESSURE CIRCUIT TEST	→ TEST3
TURBOCHARGING AND AIR INLET CIRCUIT TEST	→ TEST4
AIR FLOW SENSOR	→ TEST5
VARIABLE GEOMETRY TURBOCHARGER CONTROL	→ TEST7
ROTATING PART OF TURBOCHARGER	→ TEST8
POOR INJECTOR OPERATION	→ TEST10
HIGH PRESSURE PUMP	→ TEST11
FUEL CONFORMITY CHECK	→ TEST12

GETtheMANUALS.org

TEST1	Exhaust system check

Engine stopped: Check that the silencer outlet is not blocked.
Repair or replace the silencer, if necessary.

YES

Check the seal of the exhaust manifold on the contact surface between the turbocharger and the exhaust manifold.
Is the seal in order?

NO → Repair or replace the faulty part.

YES

Loosen the catalytic pre-converter at the turbocharger outlet.
Place a wooden block between the two parts.
Start the vehicle and check if the engine runs better.
Is the engine running normally?

NO → The exhaust pipe is correct.
Restart fault finding.

YES

Retighten the catalytic pre-converter.
Loosen and decouple or cut the catalytic converter at the catalytic pre-converter outlet.
Place a wooden block between the two parts if necessary.
Start the vehicle and check if the engine runs better.
Is the engine running normally?

NO → Replace the catalytic pre-converter.

YES

(A)

***AFTER** REPAIR*	Carry out a road test, followed by a check with the fault finding tool.

GETtheMANUALS.org

TEST1 CONTINUED	

Retighten the catalytic converter.
Loosen, disconnect or cut the intermediate chamber on the catalytic converter side.
Place a wooden block between the two parts if necessary.
Start the vehicle and check if the engine runs better.
Is the engine running normally?

NO → Replace the catalytic converter.

YES

Retighten the intermediate chamber.
Loosen, disconnect or cut the silencer on the intermediate chamber side.
Place a wooden block between the two parts, if necessary.
Start the vehicle and check if the engine runs better.
Is the engine running normally?

NO → Replace the intermediate chamber.

YES

Replace the silencer.

AFTER REPAIR	Carry out a road test, followed by a check with the fault finding tool.

GETtheMANUALS.org

TEST3	Low pressure circuit check

Ensure that the correct fuel is being used.
Run **test 12 Fuel conformity check**.

↓

Check the condition of all the low pressure diesel fuel pipes from the tank to the injection pump (the pipes should not be pinched).

↓

Check the condition of the priming bulb, and that it is working properly. Perform repairs if necessary and continue the test.

↓

If the fault is still present with a low fuel level, check the consistency of the actual fuel level and that indicated on the instrument panel.
– The transfer pump is supplied via a venturi valve located beneath it.
Check that the opening of the venturi is not blocked by dirt contained in the fuel tank.
Check the priming of the low pressure diesel circuit.

↓

Check the fuel filter:
- Conformity of the fuel filter (correct part number and RENAULT filter).
- Positioning and amount of clogging in the filter element.
- Positioning and condition of the seals.

↓

(A)

***AFTER** REPAIR*	Carry out a road test, followed by a check with the fault finding tool.

GETtheMANUALS.org

TEST3 CONTINUED	

A

Fuel supply of the injection system with additional tank.

This operation aims to detect possible faults in the low pressure supply system of a vehicle by replacing it entirely with an additional tank.

Mode:

– Disconnect the diesel fuel supply pipe at the fuel filter inlet and seal it with a plug.
– Connect a pipe to the fuel filter inlet and insert the other end into a **clean** container which is approximately **5 litres** in volume.
– Disconnect the diesel return pipe to the injector and high pressure pump outlet union, and use a plug to block it.
– Connect a transparent pipe to the injector and high pressure pump outlet union, and insert the other end into the container.
– Fill the container with **clean** diesel fuel.
– Start the engine and let the system drain itself of its air (there must not be any air bubbles in the return pipe).

Is the customer complaint still present?

→ Low pressure circuit correct.
Reconnect the different low pressure circuit pipes and restart fault finding.

Are the low pressure circuit connections in order and in good condition?

→ Carry out the necessary repairs.
Low pressure circuit correct.
Reconnect the different low pressure circuit pipes and restart fault finding.

Low pressure circuit correct.
Restart fault finding.
END OF TEST.

***AFTER** REPAIR*	Carry out a road test, followed by a check with the fault finding tool.

GETtheMANUALS.org

TEST4	Turbocharging and air inlet circuit check

Engine stopped: Check the low and high pressure air circuits for **leaks** (air leaks in or out, upstream or downstream of the turbocharger).

→ Check the parts that are abnormally greasy of the circuit and reveal a lack of tightness.
Check:
- the condition and fitting of the ducts (foreign bodies, clogged, disconnected, pinched, broken, holed, cut, tightness of the mounting bolts, etc.).
- the present and tightening of the clamps.
- the turbocharger pressure sensor is mounted correctly on the manifold.
- The pipes and the take-off point between the air duct and the turbocharging sensor.

Carry out the necessary repairs.

↓

Checking the air filter.

→ Check:
- That the air filter unit inlet and outlet are not blocked.
- That air filter unit is in good condition and is fitted correctly (not dislodged, broken, pierced; condition and positioning of the foam, etc.).
- The cleanliness, conformity and the absence of deformation of the filter element.
- The air flowmeter, run **test 5 Air flowmeter**.

←

Check:
- the condition of the damper valve (damper),
- the condition of the swirl flaps,
- the tightness of the mounting bolts,

Carry out the necessary repairs.
Replace if necessary.

→ Carry out a visual inspection of the EGR circuit sealing.
Replace if necessary.

←

Check the exhaust, run **test 1 Exhaust system check**.
Carry out the necessary repairs.

↓

→ Check the condition of the intercooler:
- clogging,
- leaks (vehicle stationary, stabilise the engine speed between **3500 rpm** and **4000 rpm** and check that there are no leaks).

Replace if necessary.

↓

Check that the turbocharging pressure sensor take-off point is not blocked.
Replace if necessary.
END OF TEST.

AFTER REPAIR	Carry out a road test, followed by a check with the fault finding tool.

GETtheMANUALS.org

TEST5	Air flowmeter

Contamination of the grille
Visual inspection: remove the flowmeter; there should be no foreign bodies in the grilles (see **illustration no. 110734 test 5 continued**).
Do not clean the grilles using compressed air or any other procedure: this damages the sensors and creates variations from the values displayed on the CLIP tool.
Check the air circuit sealing upstream of the air flowmeter: ducts and air filter unit disconnected or pierced, presence of seals.
Replace the air flowmeter if necessary and clean upstream of this, if necessary.

↓

Damage to electrical components
Visual inspection: remove the flow sensor - the components should not be broken.
Replace the air flowmeter if necessary.

↓

Oxidation of the electrical components
Visual inspection: remove the air flow sensor connector, there should not be any green deposits on the electrical components.
Replace the air flowmeter if necessary.

↓

Clogging of the air flowmeter
Test:

- Check the conformity values, with a warm engine (coolant temperature: **80˚C**).
- During the **first 30 seconds** after starting.
- Engine speed: idling
- Air temperature between **30 and 70˚C**.
- **PR145 ENGINE SPEED = 700 rpm and PR136 EGR POSITION = 3.2 mm:**
  PR146 EGR POSITION = 42 kg/h ± 4.2 kg/h
- **PR145 "ENGINE SPEED" = 700 rpm and PR136 "EGR POSITION" = 0 mm:**
  PR146 EGR POSITION = 72.3 kg/h ± 7.2 kg/h

(To obtain **PR136 EGR POSITION = 0 mm**, depress the accelerator pedal **briefly** and release the pedal while displaying parameter **PR136 EGR position** in the **diagnostic tool** then freeze the image when the parameter **PR136 EGR POSITION = 0 mm**).

- Apply the procedure for **DF056 Air flow sensor circuit** for the checks on the air flowmeter.

Replace the air flowmeter if necessary.
END OF TEST.

***AFTER** REPAIR*	Carry out a road test, followed by a check with the fault finding tool.

GETtheMANUALS.org

TEST5 CONTINUED	

Contamination of the grille

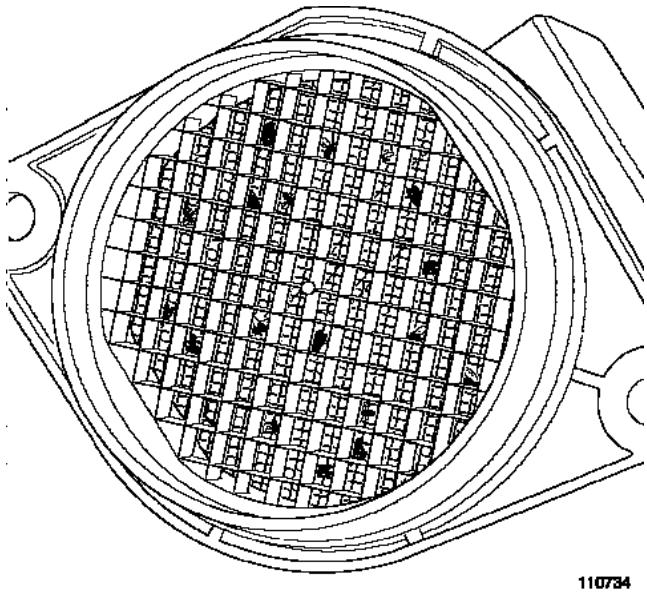

***AFTER** REPAIR*	Carry out a road test, followed by a check with the fault finding tool.

GETtheMANUALS.org

TEST7	Variable geometry turbocharger control

Start the engine and check that:
- **PR346 Turbocharger wastegate valve position ≈ 1.64 ± 0.1 mm**, warm engine,
- **PR345 Turbocharger wastegate potentiometer voltage ≈ 3.9 ± 0.1 V at 20˚C**,
- the variable geometry control moves easily.

↓

Does the variable geometry control move easily? — **NO** → Replace the turbocharger.

YES

↓

Stop the engine and check that:
- **PR346 Turbocharger wastegate valve position ≈ 10 mm at idle speed, < 10 mm during deceleration**,
- **PR345 Turbocharger wastegate potentiometer voltage ≈ 0.45 V with PR346 = 10 mm**,
- the variable geometry control moves easily.

↓

Does the variable geometry control move easily? — **NO** → Replace the turbocharger.

YES

↓

Stop the engine and check that:
- **PR346 Turbocharger wastegate valve position ≈ 10 mm at idle speed, < 10 mm during deceleration**,
- **PR345 Turbocharger wastegate potentiometer voltage ≈ 0.45 V with PR346 = 10 mm**,
- the variable geometry control moves easily.

↓

Continue the turbocharger test with **test 8 Rotating part of turbocharger**.

***AFTER** REPAIR*	Carry out a road test, followed by a check with the fault finding tool.

GETtheMANUALS.org

TEST8	Rotating part of a turbocharger

With the engine cold and stopped, remove the air inlet duct from the turbocharger; check manually if the shaft of the turbine and of the compressor turns.
Does the shaft turn?

NO → Replace the turbocharger.

Seizing of the turbocharger may be caused by poor lubrication of the bearings. Check the lubrication circuit for any blockage and check the engine oil pressure. Apply the procedure described in **Technical Note 3938A, F9Q engine-Turbocharger failure** which can be applied to this engine.

YES

Visually check the condition of the compressor wheel then the turbine wheel (see illustrations **No. 110737 test 8 continued 1 and 110738 test 8 continued 2**).
Are the wheels in good condition?

NO

YES

Manually check the end float of the wheels (see illustration **no. 110880 test 8 continued 3**).
The significant end float is approximately **2 mm**.
Does the turbocharger have too much play in the shaft?

YES → Replace the turbocharger. Apply the procedure described in **Technical Note 3938A, F9Q engine-Turbocharger failure** which can be applied to this engine.

If the moving part is broken: apply the procedure described in **Technical Note 3938A, F9Q engine-Turbocharger failure** which can be applied to this engine.
IMPORTANT
Risk of destroying the new turbocharger and the engine if the air circuit is not cleaned and the oil and its filter are not replaced.

NO

The rotating section is in order.
Is there oil in the exhaust?

NO → **END OF TEST.**

YES

Replace the catalytic pre-converter.

***AFTER** REPAIR*	Carry out a road test, followed by a check with the fault finding tool.

GETtheMANUALS.org

TEST8 CONTINUED 1	

Information:
The operating play of the turbocharger bearings is approximately **25 µm** (micrometers or microns) between the shaft of the turbocharger and the internal mating face of the bearings and **75 µm** between the exterior part of the bearings and the bearing housing.
Risks:
In the event of destruction of the turbocharger bearings, the steel and bronze swarf from this destruction are evacuated through the turbocharger oil to the engine's oil sump. The swarf can, consequently, be returned to the oil circuit via the oil pump, then cause widespread contamination of the engine oil circuit. This causes abnormal wear on the crankshaft bearing bushings, the con rod bearing shells and the camshafts, etc.
In the event of the compressor wheel breaking, parts of the blades may be found in the intercooler or in the air circuit ducts. The turbine wheel could easily be found in the catalytic converter.

Deformed, twisted blade (“soft” foreign body)

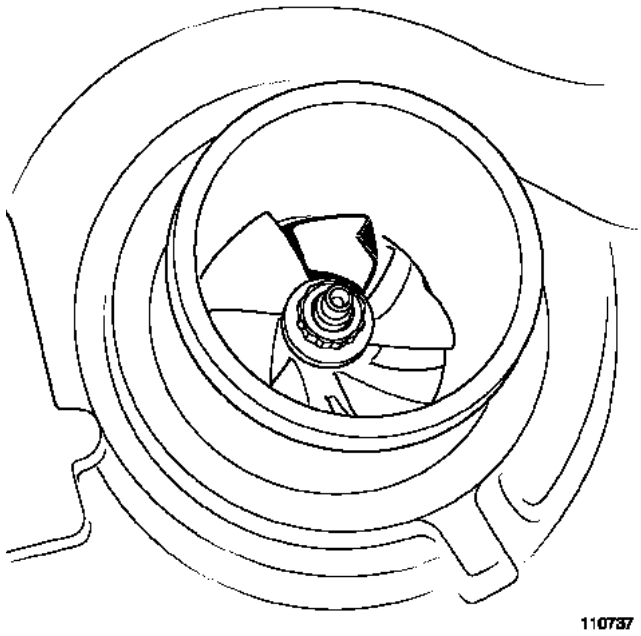

***AFTER** REPAIR*	Carry out a road test, followed by a check with the fault finding tool.

GETtheMANUALS.org

TEST8 CONTINUED 2	

Broken blades (“hard” foreign body)

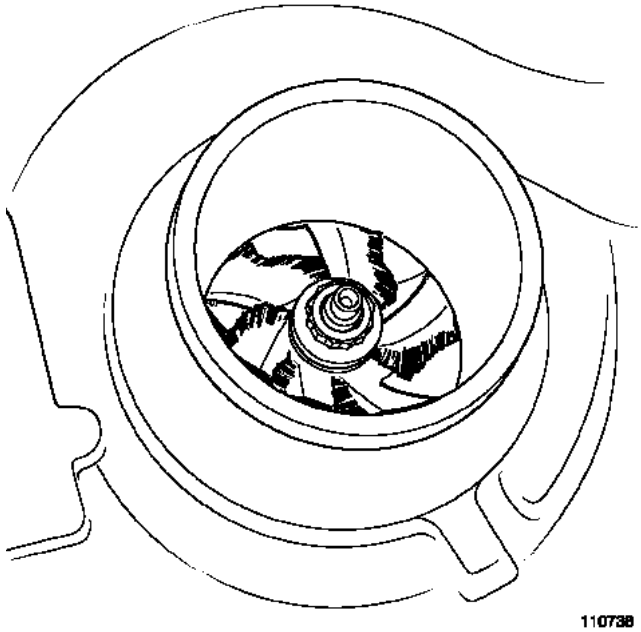

***AFTER** REPAIR*	Carry out a road test, followed by a check with the fault finding tool.

GETtheMANUALS.org

TEST10	Incorrect injector operation

For all Vdiags except VELSATIS Vdiag 04:

PART A

CHECK THE INJECTOR FLOW CORRECTION: (INDIVIDUAL CORRECTION)
– In CLIP, choose the **Fuel circuit** sub-function.
– With the engine idling and the fuel temperature **> 50˚C**, display the flow correction values for each injector (individual correction), i.e.:
PR364 Cylinder no. 1 fuel flow correction;
PR405 Cylinder no. 2 fuel flow correction;
PR406 Cylinder no. 3 fuel flow correction;
PR365 Cylinder no. 4 fuel flow correction,
PR407 Cylinder no. 5 fuel flow correction,
PR408 Cylinder no. 6 fuel flow correction.
The **normal value** for flow correction for an injector is approximately **± 1 mm^3/stroke**. This tolerance may increase with time, but indicates an injector/cylinder fault if it exceeds **± 5 mm^3/stroke**.
1) If at least one of these values is > + 5 mm^3/stroke
– If the compression value recorded with the compression gauge reveals a faulty cylinder, carry out the necessary repairs and apply **Part C**.
– If the customer complaint is still present, replace the injector.
– Check the valve clearance.
– See paragraph **Part B**, for confirming the fault finding.
2) If at least one of these values is < - 5 mm^3/stroke
– Check the level and condition of the engine oil.
– Remove the injector which has the biggest negative value.
– Check the valve clearance.
– Replace the injector.
– See paragraph **Part B**, for confirming the fault finding.
3) If at least one of these values does not stabilise (at least 30 seconds after starting and when warm)
– Check the low pressure circuit with **test 3 Low pressure circuit check**.
– Ensure that the correct fuel is being used. Run **test 12 Fuel conformity check**.
– See paragraph **Part B**, for confirming the fault finding.

Note:
Before replacing an injector, check that its sealing washer is in place and in order.

IMPORTANT
When removing or refitting an injector, respect the cleanliness guidelines and safety advice (see **MR 353, MR 402 or MR 361 Mechanical, 13B, Diesel injection, Removal/refitting of injectors**).

***AFTER** REPAIR*	Carry out a road test, followed by a check with the fault finding tool.

GETtheMANUALS.org

TEST10 CONTINUED	

PART B
Confirmation of flow correction check fault finding for each injector: (individual correction)
Clear the fault(s) and carry out a test with the **engine at idle speed** and the fuel temperature **> 50˚C**, check that no faults appear on the diagnostic tool and that the correction values do not reach **± 5 mm^3/stroke** to confirm the repair.
– If any other cylinders have injector flow correction values which exceed **± 5 mm^3/stroke**, follow the fault finding procedure described in **Part A**". Fuel regulation balance check for each injector (individual).

PART C
Injector nozzle sealing check:
– Check the level and condition of the engine oil:
– If there is diesel fuel contamination, the leaking injector nozzle will be "greasy".
– Disconnect the preheating relay.
– Check that these traces are not caused by rising engine oil, by checking the engine compression values.
– Check the condition of the heater plug: this must not be wet. If it is, change the defective injector.
– If the engine compression values are correct, locate the faulty injector by looking at the condition of the cylinders and the pistons across the heater plug wells (greasy cylinder, overheating, starting to incur damage, etc.).
– If the cylinder - piston examination is not conclusive, remove the injectors and change the one with the "greasy" nozzle.
– If the fault finding checks do not enable the engine to be repaired, contact the Techline.

Note:
Before replacing an injector, check that its sealing washer is in place and in order.

IMPORTANT
When removing or refitting an injector, respect the cleanliness guidelines and safety advice (see **MR 353, MR 402 or MR 361 Mechanical, 13B, Diesel injection, Removal/refitting of injectors**).

***AFTER** REPAIR*	Carry out a road test, followed by a check with the fault finding tool.

GETtheMANUALS.org

TEST11	High pressure pump

Confirm the customer complaint:
Loss of power, sometimes with difficult starting from cold, before applying the test described below.
Are the following conditions confirmed?
– No fault code.
– No external leak from the fuel circuit.
– No air intake on the fuel circuit.
Check that there is no OTS to be carried out on the vehicle.
As AC029 "High pressure circuit sealing test" is not available on all VELSATIS Vdiag 04, this test may not succeed.

Stage 1: measure of the rail pressure:
– Carry out a road test and record the following parameters as soon as power is lost:
  – **PR145 Engine speed.**
  – **PR030 Accelerator pedal position.**
  – **PR038 Rail pressure.**
  – **PR008 Rail pressure setpoint.**
  – **PR213 Rail pressure loop difference.**
– Print the data found.

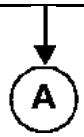

***AFTER** REPAIR*	Carry out a road test, followed by a check with the fault finding tool.

GETtheMANUALS.org

TEST11

CONTINUED

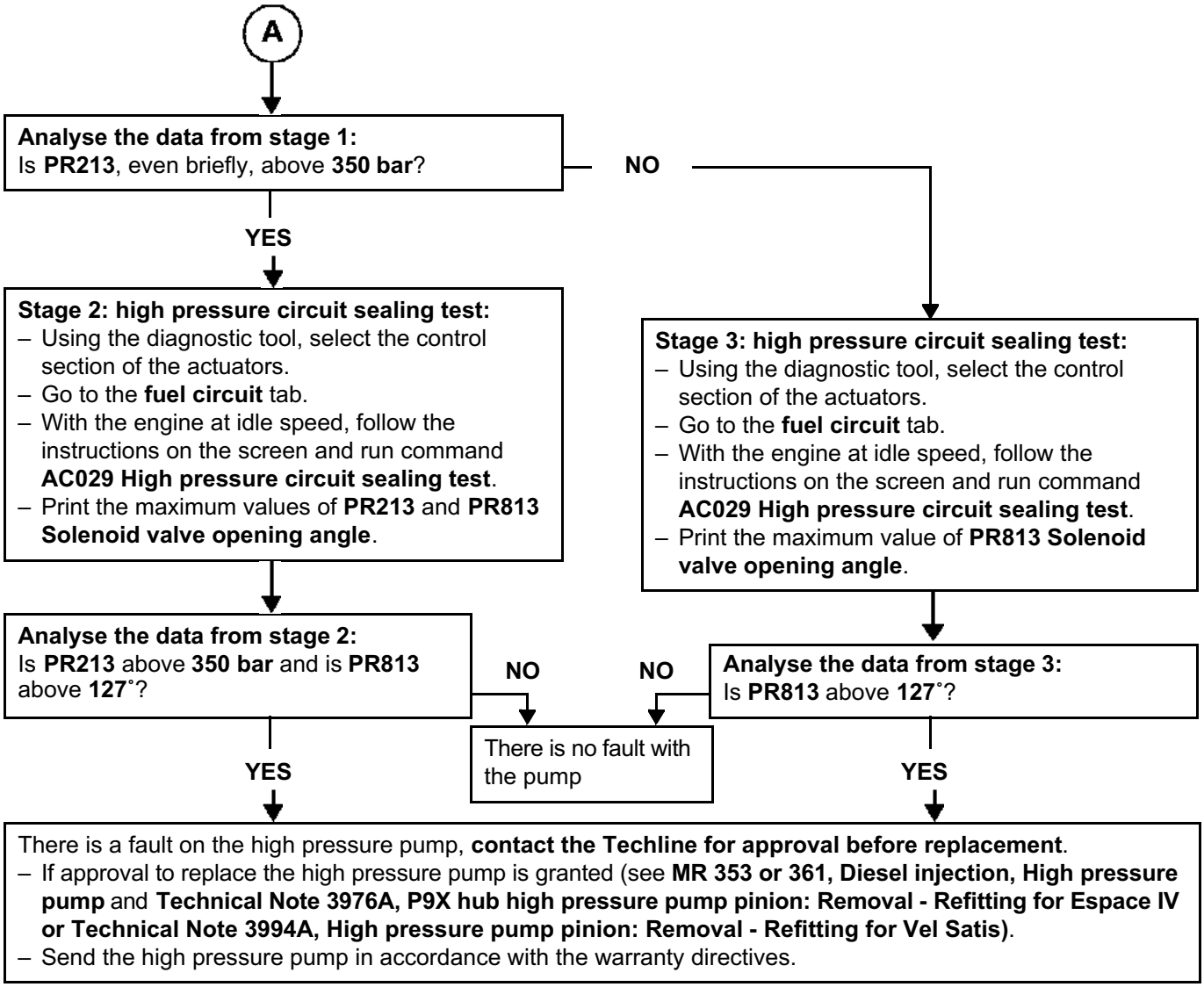

***AFTER** REPAIR*	Carry out a road test, followed by a check with the fault finding tool.

GETtheMANUALS.org

TEST12	Fuel conformity check

WARNING
During this operation, it is essential to:
– refrain from smoking or bringing incandescent objects close to the work area,
– guard against petrol splashes caused by the residual pressure in the pipes,
– wear safety goggles with side guards,
– wear leaktight gloves (Nitrile type).

IMPORTANT
– To avoid any corrosion or damage, protect the areas on which fuel is likely to run.
– To prevent impurities from entering the circuit, place protective plugs on all fuel circuit components exposed to the open air.

Preparations:
Weigh an empty **1300 ml plastic cup (part no. 77 11 171 413)** with its cover **(part no. 77 11 171 416)** using electronic scales such as those used in body paint workshops (example: **PANDA part no. 77 11 224 995**). Record the weight of the empty plastic cup.
This type of plastic cup is used to prepare paint.

Remove **1 L** of fuel **at the diesel filter outlet** (see **MR 353, 361 or 402, Mechanical, 19C, Tank, Fuel tank: Draining**), using a pneumatic transfer pump (**part no. 634-200**) and place it in the **1300 ml** plastic cup.
Cover the plastic cup with its cover and let it settle for approximately **2 minutes**.

,

Is the fuel cloudy or does it separate into two parts?

YES → Presence of water in diesel fuel, the fuel is not compliant. Drain the fuel circuit, including the tank (**MR353, 361 or 402, Mechanical, 19C, Tank, Fuel tank: Draining).**

NO ↓

AFTER REPAIR	Carry out a road test, followed by a check with the fault finding tool.

GETtheMANUALS.org

TEST12 CONTINUED 1	

A

Weigh the diesel fuel and note the fuel weight after subtracting the weight of the empty plastic cup and its cover.
Does the fuel weight fall between the minimum and maximum weights given in the table below?

Calculated weight (g.)		Fuel temperature (˚C)
Minimum weight	Maximum weight	
821	846	13
821	846	14
820	845	15
819	844	16
819	844	17
818	843	18
817	842	19
816	841	20
816	841	21
815	840	22
814	839	23
814	839	24
813	838	25

Check the fuel temperature by immersing a thermometer in the plastic cup.

YES → B

NO → C

AFTER REPAIR	Carry out a road test, followed by a check with the fault finding tool.

GETtheMANUALS.org

TEST12 CONTINUED 1	

B

End of test.

C

The fuel is not correct.
If the fuel weight is less than the minimum value then there is petrol in the diesel fuel.
If the fuel weight is greater than the minimum value then there is oil in the diesel fuel.
Drain the fuel circuit, including the tank (**MR353, 361 or 402, Mechanical, 19C, Tank, Fuel tank: Draining).**

Note:
If the weight measured reaches the limit values, the measurement can be performed with a **2230 ml plastic cup (part no.77 11 171 414)** and its cover **(part no.77 11 171 417):**
– Carry out a quick test drive in order to mix the fuel, then remove **2 l** of fuel.
– Perform the test again and check the results by multiplying the limit values by 2.

Contact the Techline if you have doubts or problems with the customer.

AFTER REPAIR	Carry out a road test, followed by a check with the fault finding tool.

GETtheMANUALS.org

MANIFOLD/TURBOCHARGER PRESSURE SENSOR

Characteristics:	Pressure - Voltage transducer
Supply voltage:	**5 V ± 0.25 V**
Type of circuit:	Active circuit
System equipped:	Denso injection
Type of connector:	**3-track** (1 signal - 2 minus - 3 plus)

Description:
This sensor is used by the injection system to give a signal relating to the manifold pressure vacuum or the turbocharging pressure.
It uses a piezoelectric component which produces an electric voltage proportional to the stress applied to it (in this case, pressure).
This signal is very weak and is amplified by an internal electronic system which requires an external **5 V** feed supplied by the injection computer.

Checking the sensor:
The sensor delivers a voltage proportional to the inlet manifold vacuum:
2.59 bar absolute (**1.59 bar** relative) = **4.5 V**.
1 bar absolute (**0 bar** relative) = **1.73 V**.
0.07 bar absolute (**- 0.93 bar** relative) = **0.284 V**.

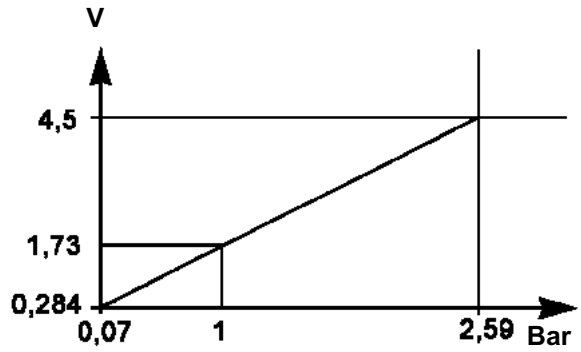

Check first that the sensor is correctly supplied with a voltage of **+ 5 V** with the sensor connected.
Use a multivac pump connected to the sensor's vacuum union to check that the signal does correspond to the graph. Disconnect **track 3** linking the computer to the sensor and connect the + lead of a multimeter (rated at between **5 and 10 V**) on **track 3** of the sensor and the - lead to **track 2** of the sensor (sensor earth still connected to the computer).
At atmospheric pressure, the voltage should be approximately equal to **1.73 V**.
At close to **2.59 bar** absolute, the voltage should be more or less equal to **4.5 V**.
At close to **0.07 bar** absolute, the voltage should be more or less equal to **0.284 V**.
If the voltages do not correspond to the pressures, replace the sensor.

GETtheMANUALS.org

AIR FLOW SENSOR

Characteristics:	Air flow - Voltage transducer
Supply voltage:	**12 V**
Type of circuit:	Active circuit
System equipped:	Denso injection
Type of connector:	**5-track** (**5**: signal; **3**: earth; **4**: + 5 V; **2**: + 12 V)

Description:
This sensor is used by the injection system to give a signal relating to the air flow circulating in the inlet circuit.
It uses a so-called "hot film" system, a ceramic insert onto which a heating resistor and a temperature sensor are screen-printed, which are placed in the middle of the air stream.
An electronic circuit heats the insert and monitors its temperature by means of its temperature sensor located away from the heating resistor.
The passage of air cools the ceramic wafer, and the electronic circuit will compensate for this cooling by increasing the current passing through the heating resistor so as to maintain its reference temperature.
This current, after being formatted by the flow sensor electronics, represents the air flow passing through the flow sensor.
A signal varying from **0** to **12 V** represents an air mass flow rate.
An external **12 V** power supply provided by the injection computer's safety relay is necessary for it to operate.

Checking the sensor:
Check that the grilles protecting the flow sensor are not clogged or damaged and check the cleanliness of the ceramic sensor located in the centre of the housing, which should be clean and must not be broken. Do not use detergent to clean the sensor (risk of damage).
The sensor cannot be dismantled; in case of doubt regarding its consistency, carry out a flow measurement.
Conditions:
Engine at operating temperature, exhaust gas recirculation valve and turbocharger wastegate disconnected and air conditioning off.
Perform a measurement at idling speed and then at a stabilised 3,000 rpm. Repeat this measurement with another flow sensor. The values should be more or less equivalent; if not, replace the flow sensor.
Average flow value at inlet according to the conditions set out above:
At idle speed (700 rpm): 70 kg/h
At 3000 rpm (stabilised): 320 kg/h

Note:
These values are typical for a new engine in operation and may only be used as an estimate.
To confirm the test, carry out a test with another flowmeter.

GETtheMANUALS.org

COOLANT TEMPERATURE SENSOR - INLET AIR - FUEL

IMPORTANT
Only affects the OBD air temperature sensor at the flow sensor.

Characteristics:	Temperature - resistance transducer
Resistance:	Depends on the temperature
Type of circuit:	Passive circuit
System equipped:	Denso injection
Type of connector:	**2 tracks**

Description:
This sensor is used by the injection system to give a signal representing a temperature of a component to which the sensor is attached.
This is a negative temperature coefficient resistor (the resistance drops when the temperature increases).
A circuit in the computer powers the sensor with a constant current and variation of the resistance causes variation of the voltage across the terminals of the sensor, this voltage being representative of the temperature.

Checking the sensor:
The presence of a yellow or transparent wax in the connector indicates that the sensor seal is broken; replace it and recheck the sealing.
Use a multimeter to first check the insulation of the sensor's two tracks from its metal base (if so equipped) or from engine earth.
The resistance should in this case be infinite; if this is not the case replace the sensor.
Using a multimeter, check the sensor's resistance in relation to the temperature.
This should be **3515 Ω ± 200 Ω at 20 °C**.
If the values do not correspond, replace the sensor.

GETtheMANUALS.org

ACCELERATOR POTENTIOMETER

Characteristics:	Position - resistance transducer
Supply voltage:	2 gangs, each at **+ 5 V ± 0.25 V**
Resistance:	Depends on the angle
Type of circuit:	Passive circuit
System equipped:	Denso injection
Type of connector:	**6 tracks**

Pin configuration:

Track 2 > potentiometer earth 1	**track 1 >** potentiometer earth 2
Track 4 > potentiometer supply 1	**track 5 >** potentiometer supply 2
Track 2 > potentiometer signal 1	**track 1 >** potentiometer signal 2

Description:
This sensor is equipped with two potentiometers (variable resistance) insulated from one another.
The position of the shaft causes a variation in the sensor's internal resistance.
The two gangs are not synchronous, gang 2 has a resistance value double that of gang 1.
These two gangs are used by the injection computer to check that the accelerator potentiometer is giving consistent signals.

Checking the sensor:
Use a multimeter to measure the resistance of the potentiometers,
– between **tracks 1** and **5**, the resistance should be **1700 ± 500 Ω**,
– between **tracks 2** and **6**, the resistance should be **1200 ± 500 Ω**,
If one of the gangs is not within these tolerances, replace the accelerator potentiometer.

MINIMUM value:
Gang 1 (from **13.6 % to 16.4 %** of Valim P1 (5 V) or **0.68 to 0.82 V**)
Gang 1 (from **5.2 % to 9.8 %** of Valim P2 (5 V) or **0.26 to 0.49 V**)

MAXIMUM value:
Gang 1 (from **83.6 % to 92.4 %** of Valim P1 (5 V) or **4.18 to 4.62 V**)
Gang 1 (from **40.7 % to 47.3 %** of Valim P2 (5 V) or **2.03 to 2.36 V**)

GETtheMANUALS.org

WASTEGATE POSITION SENSOR

Characteristics: Position - resistance transducer
Supply voltage: **5 V ± 0.25 V**
Type of circuit: Passive circuit
System equipped: Denso injection
Type of connector: **3-track** (1 signal - 2 minus - 3 plus)

Description:
This sensor is used by the injection system to give a signal relating to the turbocharger wastegate control position.
It uses a potentiometer powered externally by the injection computer at a voltage of **5 V**.
The sensor will thus generate a voltage proportional to its position.

Checking the sensor:
The sensor delivers a voltage proportional to the position of the wastegate rod:
End stop in rest position = **4.70 V**
10 mm of stroke = **0.45 V**

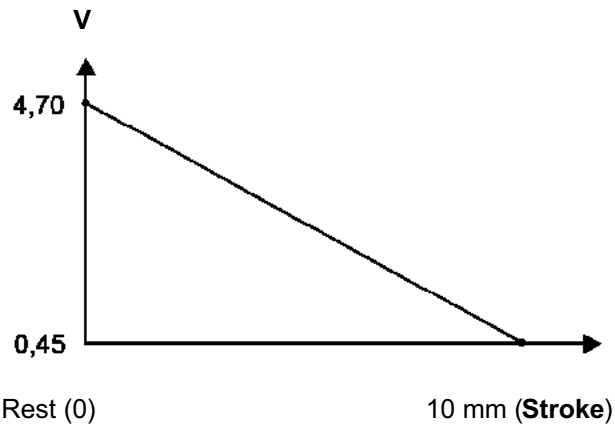

Check first that the sensor is correctly supplied with a voltage of **+ 5 V** with the sensor connected.
Use a multivac pump connected to the capsule's vacuum union and a rule to measure the rod travel.
Check that the signal corresponds to the graph.
Disconnect **track 1** linking the computer to the sensor and connect the + lead of a multimeter (rated at between **5 and 10 V**) to **track 1** of the sensor and the - lead to **track 2** of the sensor (sensor earth still connected to the computer).
If the voltages do not correspond to the position of the wastegate rod, replace the sensor.

GETtheMANUALS.org

RAIL PRESSURE SENSOR

Characteristics:	Pressure - Voltage transducer
Supply voltage:	**5 V ± 0.25**
Type of circuit:	Active circuit
System equipped:	Denso injection
Type of connector:	**3-track** (1 signal - 2 minus - 3 plus)

Description:
This sensor is used by the injection system to give a signal relating to the rail pressure (fuel pressure in the common rail).
It uses a piezoelectric component which produces an electric voltage proportional to the stress applied to it (in this case, pressure).
This signal is very weak and is amplified by an internal electronic system which requires an external **5 V** feed supplied by the injection computer.

Checking the sensor:
The sensor delivers a voltage proportional to the rail pressure:
1600 bar = 4.20 V
0 bar = 1 V

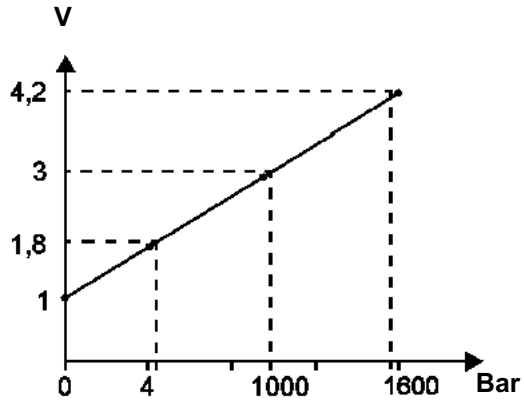

The formula is as follows:
P being the pressure in bar: **(P/500) + 1 = U**
U being the signal pressure in volts: **(U - 1) x 500 = P**
Check first that the sensor is correctly supplied with a voltage of **+ 5 V** with the sensor connected.
Dump the pressure in the common rail and check that the sensor signal voltage is **1 V**.
If the voltage is not correct, replace the sensor.

GETtheMANUALS.org

P9X 701 engine speed:	– Idling speed	**700 ± 50 rpm**
	– No load maximum	**5,000 ± 80 rpm**
	– Injection order	**1-2-3-4-5-6**
	– Compression ratio	**18.5: 1**
High pressure pump:	EDC-U2P	**Denso HP2270L**
Turbocharging pressure sensor:	Bolted to rail (pressure range: **0 to 1700 bar**)	
Wastegate control solenoid valve:	**R = 12 ± 1 Ω** (control frequency: 400 Hz)	
Turbocharger position sensor:	**R = 5 ± 1 kΩ at 20 ˚C** between tracks **2** and **3**	
Injector:	**2.7 Ω at 20 ˚C (new injector), calibration: 466 bar**	
Pressure regulation solenoid valves:	**SCV1**, R **= 1.6 ± 0.3 Ω at 20 ˚C** (non-removable) **SVC2**, R **= 1.6 ± 0.3 Ω at 20 ˚C** (non-removable)	
Injection computer (ECU):	**121 tracks, 2 connectors:**	**A, 81 tracks** **B, 40 tracks**
Injection Power Unit (EDU):	**16 tracks**	
Accelerator pedal sensor:	R gang 1 **= 1200 Ω ± 500 Ω** R gang 2 **= 1700 Ω ± 500 Ω**	
Inlet air temperature sensor:	R = **3515 Ω ± 200 Ω at 20 ˚C**	
OBD air temperature sensor (flow sensor):	R = **2515 Ω ± 200 Ω at 20 ˚C**	
Temperature sensor (diesel):	R = **3515 Ω ± 200 Ω at 20 ˚C**	
Engine coolant temperature sensor:	R = **3515 Ω ± 200 Ω at 20 ˚C**	
Engine oil temperature sensor:	R = **3515 Ω ± 200 Ω at 20 ˚C**	
Engine speed sensor:	Induction sensor, R **= 2150 ± 300 Ω**	
Camshaft sensor:	Induction sensor, R **= 2150 ± 300 Ω**	
Air flowmeter:	track 1**: air temperature signal** track 2**: - flow sensor** track 3**: ± 5 V flow sensor**	track 4**: + 12 V battery** track 5**: Air flow signal** track 6**: Earth**
Exhaust gas recirculation valve (EGR):	R (coil) = **6.8 ± 0.5 Ω at 20 ˚C** between tracks **4** and **5**	
	R (potentiometer) **= 5 ± 0.5 kΩ at 20 ˚C** between tracks **2** and **3**	
	track 1**: potentiometer signal** track 2**: Earth** track 3**: + 5 V**	track 4**: EGR control** track 5**: + 12 V battery**

(R = resistance)

Values given as a guide only

GETtheMANUALS.org

VEL SATIS

1 Engine and peripherals

13B DIESEL INJECTION

EDC15C3
Program No.: CB
Vdiag No.: 10-14-18-1C

Fault finding - Introduction	13B - 2
Fault finding - Cleanliness guidelines	13B - 7
Fault finding - System operation	13B - 9
Fault finding - Allocation of computer tracks	13B - 14
Fault finding - Replacement of components	13B - 17
Fault finding - Configurations and programming	13B - 20
Fault finding - Fault summary table	13B - 22
Fault finding - Interpretation of faults	13B - 25
Fault finding - Conformity check	13B - 127
Fault finding - Status summary table	13B - 163
Fault finding - Interpretation of statuses	13B - 164
Fault finding - Parameter summary table	13B - 192
Fault finding - Interpretation of parameters	13B - 194
Fault finding - Command summary table	13B - 197
Fault finding - Interpretation of commands	13B - 198
Fault finding - Customer complaints	13B - 221
Fault finding - Fault Finding Chart	13B - 222
Fault finding - Test	13B - 236
Fault finding - Glossary	13B - 271

V5 **Edition Anglaise**

"The repair procedures given by the manufacturer in this document are based on the technical specifications current when it was prepared.

The procedures may be modified as a result of changes introduced by the manufacturer in the production of the various component units and accessories from which his vehicles are constructed."

All rights reserved by Renault s.a.s.

Copying or translating, in part or in full, of this document or use of the service part reference numbering system is forbidden without the prior written authority of Renault s.a.s.

© Renault s.a.s. 2008

GETtheMANUALS.org

1. SCOPE OF THIS DOCUMENT

This document presents the fault finding procedure applicable to all computers with the following specifications:

Vehicle: **Laguna II, VelSatis, Velsatis ph2, Espace IV**

Function concerned: **Diesel injection**

Computer name: **BOSCH EDC15C3**

Program No.: **CB**

Vdiag No.: **10, 14, 18, 1C**

2. PREREQUISITES FOR FAULT FINDING

Documentation type

Fault finding procedures (this document):
– Assisted fault finding (integrated into the diagnostic tool), Dialogys.
Wiring diagrams:
– Visu-Schéma (CD-ROM), paper.

Type of diagnostic tools

– **CLIP + multiplex line sensor**

Special tooling required

Special tooling required	
	Multimeter
Elé. 1681	Universal bornier

3. REMINDERS

Procedure

To run fault finding on the vehicle computers, switch on the ignition.

Connect the diagnostic tool and perform the required operations.

IMPORTANT
For the **Espace IV, Laguna II, Velsatis, Velsatis ph2** proceed as follows:
– vehicle card in reader,
– connect the diagnostic tool and perform the required operations.
For the **Velsatis ph2** proceed as follows:
– press the unlocking button on the card,
– insert the card in the reader,
– engage a gear,
– press the start button (interrupting the timed + after ignition feed mode),
– press the Start button for longer than 5 seconds until it flashes rapidly.
To **cut off + after ignition**, proceed as follows:
– disconnect the diagnostic tool,
– remove the card.

GETtheMANUALS.org

Faults

Faults are declared present or stored (depending on whether they appeared in a certain context and have disappeared since, or whether they remain present but are not diagnosed within the current context).

The **present** or **stored** status of faults should be taken into consideration when the diagnostic tool is switched on after the + after ignition feed (without any system components being active).

For a **present fault**, apply the procedure described in the **Interpretation of faults** section.

For a **stored fault**, note the faults displayed and apply the instructions in the **Notes** section.

If the fault is **confirmed** when the instructions in the Notes section are applied, the fault is present. Deal with the fault.

If the fault is **not confirmed**, check:
- the electrical lines which correspond to the fault,
- the connectors for these lines (for oxidation, bent pins, etc.),
- the resistance of the component detected as defective,
- the condition of the wires (melted or split insulation, wear).

Conformity check

The aim of the conformity check is to check data that does not produce a fault on the diagnostic tool because the data is inconsistent. Therefore, this stage is used to:
- carry out fault finding on faults that do not have a fault display, and which may correspond to a customer complaint.
- check that the system is operating correctly and that there is no risk of a fault recurring after repairs.

This section gives the fault finding procedures for statuses and parameters and the conditions for checking them.

If a status is not behaving normally or a parameter is outside the permitted tolerance values, consult the corresponding fault finding page.

Customer complaints - Fault finding chart

If the test with the diagnostic tool is OK but the customer complaint is still present, the fault should be processed by **customer complaints**.

A synopsis of the general procedure to follow is provided on the following page in the form of a flow chart.

GETtheMANUALS.org

4. FAULT FINDING PROCEDURE

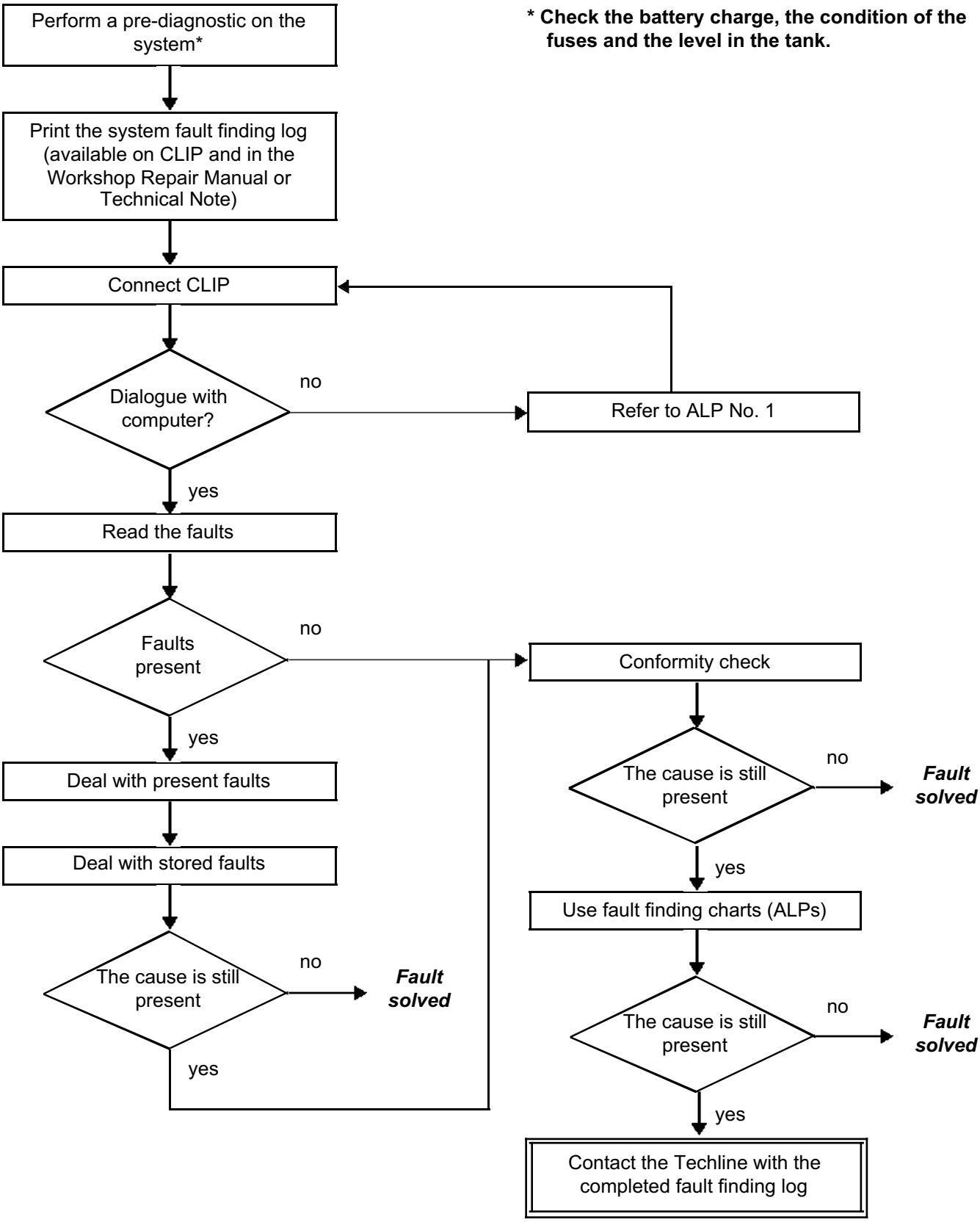

*** Check the battery charge, the condition of the fuses and the level in the tank.**

GETtheMANUALS.org

4. FAULT FINDING PROCEDURE (continued)

Wiring check

Fault finding problems
Disconnecting the connectors and/or manipulating the wiring harness may temporarily remove the cause of a fault.
Electrical measurements of voltage, resistance and insulation are generally correct, especially if the fault is not present when the analysis is made (stored fault).

Visual inspection
Look for damage under the bonnet and in the passenger compartment.
Carefully check the fuses, insulators and wiring harness routing.
Look for signs of oxidation.

Physical inspection
While manipulating the wiring harness, use the diagnostic tool to note any change in fault status from stored to present.
Make sure that the connectors are properly locked.
Apply light pressure to the connectors.
Twist the wiring harness.
If there is a change in status, try to locate the source of the fault.

Inspection of each component
Disconnect the connectors and check the appearance of the clips and tabs, as well as the crimping (no crimping on the insulating section).
Make sure that the clips and tabs are properly locked in the sockets.
Check that no clips or tabs have been dislodged during connection.
Check the clip contact pressure using an appropriate model of tab.

Resistance check
Check the continuity of entire lines, then section by section.
Look for a short circuit to earth, to **+ 12 V** or with another wire.

If a fault is detected, repair or replace the wiring harness.

GETtheMANUALS.org

5. FAULT FINDING LOG

IMPORTANT

IMPORTANT
Any fault on a complex system requires thorough fault finding with the appropriate tools. The FAULT FINDING LOG, which should be completed during the procedure, enables you to keep track of the procedure which is carried out. It is an essential document when consulting the manufacturer.

IT IS THEREFORE MANDATORY TO FILL OUT A FAULT FINDING LOG EACH TIME FAULT FINDING IS CARRIED OUT

You will always be asked for this log:

- when requesting technical assistance from Techline,
- for approval requests when replacing parts for which approval is mandatory,
- to be attached to monitored parts for which reimbursement is requested. The log is needed for warranty reimbursement, and enables better analysis of the parts removed.

6. SAFETY INSTRUCTIONS

Safety rules must be observed during any work on a component to prevent any damage or injury:
– check the battery voltage to avoid incorrect operation of computer functions,
– use the proper tools.

GETtheMANUALS.org

I - RISKS ASSOCIATED WITH CONTAMINATION

The high pressure direct injection system is highly sensitive to contamination. The risks associated with contamination are:
– damage to or destruction of the high pressure injection system,
– components jamming,
– components losing seal integrity.

All After-Sales operations must be performed under clean conditions. This means that no impurities (particles measuring a few microns) have entered the system during the removal-refitting procedures.

The cleanliness principle must be applied from the filter to the injectors.

What are the sources of contamination?
– metal or plastic swarf,
– paint,
– fibres:
    – from cardboard,
    – from brushes,
    – from paper,
    – from clothing,
    – from cloths.
– foreign bodies such as hair,
– ambient air,
– etc.

IMPORTANT
Cleaning the engine using a high pressure washer is prohibited because of the risk of damaging connections. In addition, moisture may collect in the connectors and create electrical connection faults.

II - Instructions to be followed before carrying out any work

IMPORTANT
Before any work is carried out on the high pressure injection system, protect:
– the accessories and timing belts,
– the electrical accessories, (starter, alternator, electric power-assisted steering pump),
– the flywheel surface, to prevent any diesel from running onto the clutch friction plate.

Check that you have plugs for the unions to be opened (set of plugs available from the Parts Department). The plugs are single-use only. After use, they must be discarded (once used they are soiled and cleaning is not sufficient to make them reusable). Unused plugs must be discarded.

GETtheMANUALS.org

Check that you have hermetically resealable plastic bags for storing removed parts. Parts stored in this way will be less susceptible to the risk of contamination. The bags are to be used once only, and discarded after use.

Obtain lint-free cleaning cloths (cloth part number **77 11 211 707**). Using normal cloth or paper is prohibited. They are not lint-free and could contaminate the fuel circuit. Each cloth should only be used once.

Use fresh cleaning agent for each operation (used cleaning agent is contaminated). Pour it into an uncontaminated container.

For each operation, use a clean brush in good condition (the brush must not shed its bristles).

Use a brush and cleaning agent to clean the unions to be opened.

Blast compressed air over the cleaned parts (tools, workbench, the parts, unions and injection system zones). Check that no bristles remain.

Wash your hands before and during the operation if necessary.

When wearing leather protective gloves cover them with latex gloves to prevent contamination.

III - Instructions to be followed when carrying out any work

As soon as the circuit is open, all openings must be plugged to prevent impurities from entering the system. The plugs to be used are available from the Parts Department. The plugs must not be reused under any circumstances.

Seal the pouch shut, even if it has to be opened shortly afterwards. Ambient air carries contamination.

All components removed from the injection system must be stored in a hermetically sealed plastic bag once they have been plugged.

Using a brush, cleaning agent, air gun, sponge or normal cloth is strictly prohibited once the circuit has been opened. These items could allow contamination to enter the system.

A new component replacing an old one must not be removed from its packaging until it is to be fitted to the vehicle.

GETtheMANUALS.org

The high pressure injection system is designed to deliver a precise quantity of diesel fuel to the engine at a set moment.

It is fitted with a **BOSCH 128-track** computer, **type EDC15C3**.

The system comprises:
- on engines fitted with a CP3 high pressure pump, a priming bulb or electric priming pump on the low pressure circuit,
- on engines fitted with a CP1 high pressure pump, an electric low pressure pump,
- a diesel filter,
- a CP1 or CP3 high pressure pump,
- a solenoid valve mounted to the pump that regulates the high pressure,
- an injector rail,
- a fuel pressure sensor built into the rail,
- four solenoid injectors,
- a diesel temperature sensor,
- a coolant temperature sensor,
- an upstream air temperature sensor,
- a cylinder reference sensor,
- an engine speed sensor,
- a turbocharger pressure sensor,
- an EGR solenoid valve,
- an accelerator pedal potentiometer,
- an atmospheric pressure sensor integrated into the injection computer,
- an air flowmeter,
- a turbocharging limiter solenoid valve,
- a damper valve or inlet flap solenoid valve,
- a swirl or turbulence flap solenoid valve.

The **common rail** direct high pressure injection system works sequentially (based on the petrol engine multipoint injection).

This injection system reduces operating noise, reduces the volume of pollutant gases and particles and produces high engine torque at low engine speeds thanks to a pre-injection procedure.

The high pressure pump generates the high pressure and transmits it to the injector rail. The actuator located on the pump controls the quantity of diesel fuel supplied, according to the requirement determined by the computer. The rail supplies each injector through a steel pipe.

GETtheMANUALS.org

Computer

This determines the injection pressure value necessary for the engine to operate correctly and controls the pressure regulator accordingly. It checks that the pressure value is correct by analysing the value transmitted by the pressure sensor mounted on the rail.
It determines the injection timing required to deliver the right quantity of diesel fuel and the moment when injection should start.
It electrically controls each injector individually after determining these two values.

The flow injected into the engine is determined by:
- the duration of injector control,
- the rail pressure (regulated by the computer),
- the needle stroke (determined by a constant for the type of injector),
- the nominal hydraulic flow of the injector (specific to each injector).

The computer manages:
- idling regulation,
- exhaust gas flow reinjection to the inlet,
- fuel supply check (advance, flow and rail pressure),
- the fan assembly control,
- the air conditioning (cold loop function),
- supply and control of the thermoplungers,
- the cruise control/speed limiter function,
- pre/postheating control,
- fault warning lights via the multiplex network.

The high pressure pump is supplied at low pressure by an integrated low pressure pump (transfer pump).
It supplies the rail, whose pressure is controlled by the fuel flow actuator for charging, and by the injector valves for discharging. This compensates for pressure drops. The flow actuator allows the high pressure pump to supply the exact quantity of diesel fuel required to maintain the pressure in the rail.
This component minimises the heat generated and improves engine output.
In order to discharge the rail using the injector valves, the valves are controlled by brief electrical pulses which are:
- short enough not to open the injector (passing through the feedback circuit from the injectors),
- long enough to open the valves and discharge the rail.

GETtheMANUALS.org

Renault vehicles are equipped with multiplex electronic systems. These systems enable dialogue between the various vehicle computers. As a result:

- the fault warning lights on the instrument panel are activated via the multiplex network,
- there is no vehicle speed sensor in the gearbox,
- the vehicle speed signal on the instrument panel is transmitted by the ABS computer to the injection computer via a wire connection and is then transmitted over the multiplex network by the instrument panel,
- the injection computer and the airbag computer are the main users of the vehicle speed signal.

Some vehicles have a presence sensor mounted in the filter for detecting water in the diesel. If there is water present in the diesel fuel, the injection and pre/postheating fault warning light comes on.

WARNING
The engine must not operate with:

- diesel fuel containing more than 10% diester,
- petrol, even in tiny quantities.

The system can inject diesel fuel into the engine at a pressure of up to **1350 bar**. Before each operation, check that the injector rail is depressurised and that the fuel temperature is not too high.
When working on the high pressure injection system, you must follow the cleanliness guidelines and safety advice specified in this document.

Dismantling the interior of the pump and injectors is forbidden. Only the fuel flow actuator, the diesel fuel temperature sensor and the venturi can be replaced.

For safety reasons, it is strictly prohibited to undo a high pressure pipe union when the engine is running.

It is not possible to remove the pressure sensor from the fuel rail because this may cause circuit contamination faults. If the pressure sensor fails, the pressure sensor, the rail and the five high pressure pipes must be replaced.

It is strictly forbidden to remove any injection pump pulley bearing the number 070 575. If the pump needs to be replaced, replace the pulley.

Supplying **+ 12 V** directly to any component of the system is prohibited.

Ultrasound descaling and cleaning are prohibited.

Never start the engine unless the battery is connected correctly.

Disconnect the injection computer when carrying out any welding work on the vehicle.

GETtheMANUALS.org

Cold loop air conditioning management

The air conditioning system is the cold loop type. The injection computer is responsible for:
- authorising requests for cold air according to refrigerant fluid pressure, engine coolant temperature and engine speed,
- requesting activation of the fan unit according to the vehicle speed, the refrigerant pressure and the engine coolant temperature.

The air conditioning system is authorise

d by the injection computer **2 to 8 seconds** after the engine is started.

Compressor activation may be inhibited in accordance with the following conditions.

Engine speed	Vehicle speed	Accelerator pedal unit
less than 3000 ± 100 rpm	less than 66 ± 1 mph (110 ± 2 km/h)	major change of position (rapid variation)
less than 2250 ± 100 rpm	less than 12 ± 2 mph (20 ± 3 km/h)	position greater than 46 ± 2 %
less than 675 ± 50 rpm	...	throttle release

Cruise control management

The cruise control function, when activated, maintains the vehicle at a preselected speed, regardless of the driving conditions encountered. Using the control buttons, the driver can increase or decrease the vehicle speed.

The cruise control function can be deactivated either using the control buttons, or by switching off the cruise control function selection switch or when system events are detected (such as the brake or clutch pedal being depressed), or when system errors are detected such as an inconsistent vehicle speed or excessive vehicle deceleration.

The cruise control function can also be temporarily suspended when the driver wants to resume control of the vehicle and exceed the selected cruising speed by depressing the accelerator pedal which then exceeds the selected fuel flow. The cruising speed is resumed when the driver releases the accelerator pedal.

It is possible to reactivate cruise control and to return to the last cruising speed after the function has been deactivated for whatever reason, during the same cycle of use (computer supply voltage not cut off). The vehicle will then attempt to return to the cruising speed using a controlled vehicle acceleration rate.

The driver has the following controls to operate the cruise control function:
- Accelerator pedal.
- Brake pedal.
- Clutch pedal.
- Function selector switch to select the cruise control operating mode.
- Instrument panel controls.

GETtheMANUALS.org

Indicator/warning light management

– **Instrument panel display**

The computer manages the data display on the instrument panel relating to engine operation. This includes 5 functions: OBD warning light, pre-postheating, coolant temperature and engine faults: Level 1 (non-critical fault) and Level 2 (emergency stop).
These five functions are represented by 3 indicator/warning lights or messages displayed by the trip computer.

– **Pre-postheating warning light**

This light is used both as an in-operation indicator light and as a system fault indicator:
– Continuously lit with + after ignition feed: indicates that the heater plugs are operating.
– Continuously lit, with the "faulty injection" message: indicates a Level 1 fault (indicating reduced operating efficiency and a restricted safety level. The user must carry out repairs as soon as possible).

– **Temperature/emergency stop warning light**

This indicator light is used both as an in-operation indicator light and as a system fault warning light. It lights up for **3 seconds** when the ignition is switched on (automatic test procedure managed by the instrument panel):
– Continuously lit: indicates engine overheating (the driver remains free to stop the vehicle or not).
– Continuously lit, with the "Engine stop" message: indicates a level 2 fault (In this case, injection is automatically shut off after a few seconds).

– **Excess pollution OBD orange warning light**

Symbolised by an engine, it lights up for approximately **3 seconds** when the ignition is switched on. This warning light may also come on when driving if the system detects an OBD fault.

GETtheMANUALS.org

Connector A (grey), 32 tracks

Track	Description
A1	Not used
A2	Programming* return signal
A3	Load potentiometer 2 earth
A4	Multiplex line L network signal (passenger compartment)
B1	Heated windscreen signal
B2	Programming* control
B3	Load potentiometer 1 earth
B4	Multiplex line H network signal (passenger compartment)
C1	Load potentiometer 1 signal
C2	Not used
C3	Diagnostic line K
C4	Not used
D1	Not used
D2	On/off* - control
D3	Diagnostic line L
D4	Rev counter signal
E1	Load potentiometer 1 power supply
E2	Clutch switch input
E3	Fuel flow signal
E4	Vehicle speed signal
F1	Load potentiometer 2 signal
F2	On/off* + control
F3	Brake pedal switch + signal
F4	Air conditioning inhibition output
G1	Fuel pump relay control
G2	Software lock (depending on engine type)
G3	Not used
G4	Air conditioning recirculation input
H1	Water in diesel fuel sensor signal
H2	Load potentiometer 2 power supply
H3	Not used
H4	Coolant temperature alert output

Connector B (brown), 48 tracks

Track	Description
A1	CAN H network signal (engine)
A2	Not used
A3	Refrigerant sensor supply
A4	Not used
B1	CAN L network signal (engine)
B2	Exhaust gas recirculation valve position potentiometer earth
B3	Heater plug set 1 fault finding
B4	Not used
C1	Turbocharger pressure sensor signal
C2	Exhaust gas recirculation valve position potentiometer signal
C3	Preheating control relay
C4	Not used
D1	Rail pressure sensor signal
D2	Not used
D3	Air temperature sensor signal
D4	Main supply relay control or immobiliser input
E1	Coolant temperature sensor earth
E2	Not used
E3	+ after ignition feed
E4	Not used
F1	Refrigerant sensor earth
F2	Exhaust gas recirculation valve position potentiometer supply
F3	Thermoplunger no. 2 relay coil control
F4	Not used
G1	Fuel temperature sensor earth
G2	Air flowmeter supply
G3	Engine speed sensor + signal
G4	Refrigerant sensor signal

* cruise control

GETtheMANUALS.org

Connector B (brown), 48 tracks (continued)

Track	Description
H1	Not used
H2	Rail pressure sensor supply
H3	Engine speed sensor - signal
H4	Air flow sensor signal
J1	Not used
J2	Turbocharger pressure sensor supply
J3	Fuel temperature sensor signal
J4	Not used
K1	Not used
K2	Not used
K3	Coolant temperature sensor signal
K4	+ Reversing lights switch
L1	Fuel flow actuator control
L2	Turbocharging pressure regulator control
L3	Power earth 1
L4	Power earth 3
M1	Exhaust gas recirculation solenoid valve control
M2	After relay + battery feed 1
M3	After relay + battery feed 2
M4	Power earth 2

Connector C (black), 48 tracks

Track	Description
A1	Fuel pump relay coil control
A2	Low-speed fan relay control
A3	Air flowmeter earth
A4	Turbocharging pressure sensor earth
B1	Not used
B2	Not used
B3	Rail pressure sensor earth
B4	High-speed fan relay control
C1	Camshaft sensor earth
C2	Not used
C3	Not used
C4	Not used
D1	Not used
D2	Not used
D3	Not used
D4	Not used
E1	Not used
E2	Not used
E3	Not used
E4	Thermoplunger no. 3 relay control
F1	Not used
F2	Not used
F3	Not used
F4	Inlet flap solenoid valve control
G1	Not used
G2	Not used
G3	Not used
G4	Not used

GETtheMANUALS.org

Connector C (black), 48 tracks (continued)

Track	Description
H1	Not used
H2	Not used
H3	Not used
H4	Swirl flap solenoid valve control.
J1	Not used
J2	Not used
J3	Not used
J4	Thermoplunger no. 1 relay coil control
K1	Not used
K2	Not used
K3	Not used
K4	Camshaft sensor signal
L1	Injector 4 command
L2	Injector 3 feed
L3	Injector 2 feed
L4	Injector 2 command
M1	Injector 1 command
M2	Injector 3 command
M3	Injector 1 feed
M4	Injector 4 feed

GETtheMANUALS.org

COMPUTER REPLACEMENT OR REPROGRAMMING

There are two steps that must be carried out when the computer is replaced or reprogrammed: **SC003 Save computer data** and **SC001 Write saved data**.

Use **SC003 before the computer is replaced or reprogrammed**. This enables certain data to be saved **in the diagnostic tool** so that the new computer* can be reconfigured like the old one. The data saved is: injector codes, EGR programming, vehicle options and idle speed correction.

Run **SC001 after the computer is replaced or reprogrammed**. It enables you to rewrite the data (saved by command **SC003**) to the new computer*.

If you cannot establish dialogue with the computer being replaced: you will not be able to save anything. After replacing the computer, reconfigure it manually according to its equipment level or parameters, using the special commands.

SC002: enter injector codes,

CF028: climate control,

CF030: thermoplungers,

VP007, VP011: Idle speed adjustment.

Exhaust gas recirculation valve data is programmed automatically the 1st time the new computer is switched on*.

* *new computer or exiting reprogramming!*

PROCEDURE

- **Before replacing or reprogramming the computer:**
  - Select **SC003 SAVE COMPUTER DATA**.
  - If the following message appears: **backup file exists, do you want to overwrite?**:

(this file corresponds to the last save carried out on the tool)

Select **YES**.

When the backup is complete, replace the computer or reprogram, then proceed to the next step.

- **After replacing or reprogramming the computer:**

Select **SC001 WRITE SAVED DATA**

Follow the instructions.

When the command is finished, switch off the ignition.

Wait for the immobiliser warning light to flash (a few seconds) and switch on the ignition again.

Establish dialogue and clear the fault memory.

End of procedure.

GETtheMANUALS.org

REPLACING THE EXHAUST GAS RECIRCULATION VALVE (EGR valve)

From Vdiag 14, the fault monitoring program on the exhaust gas recirculation valve has changed.

To do this, the computer must store the offset of the new valve (at 0 mph) and the offset measured when the ignition was last switched off (in the power-latch* phase), which corresponds to the valve closing. Using this data, the computer can detect whether the valve is clogged or seized.

When the valve is replaced, clear the stored offsets so that the program uses the new valve's offset value.

The data associated with this program is compiled in the **EMISSION CONTROL/OBD** function.
- **ET272 FIRST EGR OFFSET PROGRAMMING** = *Completed or not completed*.
- **PR128 FIRST EGR VALVE OFFSET** = 0.75 V < x < 1.5 V (manufacturing variance).
- **PR129 LAST EGR VALVE OFFSET** > or = **PR128**.
- **PR051 EGR VALVE POSITION FEEDBACK** (very close to **PR129**, when the valve is closed).

Programming **PR128** and **PR129** must be cleared every time the exhaust gas recirculation valve is replaced.

Procedure to be followed **after replacing the** exhaust gas recirculation valve:

Select the **CLEAR** menu, then **RZ002 EGR Adaptives**.

Note:
When the command has finished, the **EMISSION CONTROL/OBD function** *displays*:
ET272: not completed *PR128 and PR129 = 0.00 V* *PR022 = 0.75 V <x <1.5 V*

When the command is completed, switch off the ignition.
Wait for the end of the power latch*.

The offset is automatically reinitialised the next time the ignition is switched on.

Note:
When the reinitialisation is complete, the **EMISSION CONTROL/OBD** function displays:
ET272: completed *0.75 V < PR128 = PR129 = PR022 < 1.5 V*

End of operation.

* The immobiliser warning light will flash a few seconds after the ignition is switched off.

GETtheMANUALS.org

INJECTOR REPLACEMENT

- Please observe the cleanliness guidelines and safety advice.
- When fitting the injector, do not put any strain on it (see the procedure in the Repair Manual).
- The stored injector codes are displayed on the *Identification* screen and in the *CURRENT* column of the Special command: **SC002 ENTER INJECTOR CODES**.
- To find out if the IMA function is operational:

– **ET104 Injector code operation** on the main screen which displays **YES** if the computer includes IMA programming.

Procedure for programming the injector codes

– Read the **6-character* alphanumeric** code(s) etched on the upper section of the Bakelite body of the injector(s).
– Select **SC002 ENTER INJECTOR CODES**.
– On the CLIP tool, follow the instructions given when the help button (depicted as a book) is clicked on.
– When the command has finished, the modified code(s) is/are displayed in the **CURRENT** column.
– If necessary, clear fault **DF276 Injector code programming**: 1.DEF.

*Note:
– The letters **Q** and **J** and the numbers **0** and **9** are not used in IMA coding.
– Each code must be allocated to the cylinder on which the injector is fitted!
– Cylinder no. 1 is located at the flywheel end.

GETtheMANUALS.org

Summary of available configurations

NOTES	The configurations are performed to configure the vehicle computer according to the options available on the vehicle.

VP007: **Reducing the idling speed**

VP011: **Increasing the idling speed**

IMPORTANT
This configuration can lead to customer complaints if it is used incorrectly.

IMPORTANT

CF028: **Air conditioning**

This configuration is used to configure the computer for a vehicle fitted with air conditioning.

CF030: **Thermoplungers**

This configuration is used to configure the computer for a vehicle which is equipped with thermoplungers.

GETtheMANUALS.org

Summary of available configuration readings

NOTES	Configuration readings are used to check the status of the configurations made.

LC005: Gearbox type

(BVM or BVA) Manual or automatic
This configuration reading indicates whether the vehicle is fitted with a manual gearbox or automatic transmission.

LC009: Air conditioning

This configuration reading is directly linked to the CF028 configuration.

LC048: Turbulence flap option reading

WITH OR WITHOUT
This configuration reading shows whether the engine is fitted with turbulence flaps.

LC056: Thermoplungers

This configuration reading is directly linked to the CF030 configuration.

LC065: Water in diesel fuel sensor

WITH OR WITHOUT
This configuration reading indicates whether the engine is fitted with a water in diesel fuel detector.

GETtheMANUALS.org

WARNING LIGHT MANAGEMENT

Management of instrument panel warning lights according to the faults notified.

Faults	Hexadecimal DTC codes	Level 1 fault warning light (Orange heater plugs "on" indicator light)	Level 2 fault warning light (Red overheating warning light)	No warning light on	OBD warning light lit (Vdiag 18)
DF001 Coolant temperature sensor circuit	1801	-	-	CC.0/CO.1/ 1.DEF	-
DF002 Air temperature sensor circuit	1802	-	-	CC.0/CO.1	-
DF017 Preheating unit control circuit	1816	-	-	CC.1/CO.0	-
DF037 Immobiliser	183E	1.DEF/2.DEF	-	-	-
DF038 Computer	183F	1.DEF	-	-	1.DEF
DF040 Cylinder 1 injector circuit	182E	1.DEF	2.DEF	-	2.DEF
DF041 Cylinder 2 injector circuit	182F	1.DEF	2.DEF	-	2.DEF
DF042 Cylinder 3 injector circuit	1830	1.DEF	2.DEF	-	2.DEF
DF043 Cylinder 4 injector circuit	1831	1.DEF	2.DEF	-	2.DEF
DF046 Battery voltage	182A	-	-	1.DEF/2.DEF	-
DF056 Air flow sensor circuit	1806	1.DEF	-	CO.0/CC.1/ 2.DEF	-
DF057 Water in diesel fuel detector signal	188C	1.DEF	-		-
DF070 Clutch switch circuit	1829	-	-	1.DEF	-
DF098 Fuel temperature sensor circuit	1805	-	-	CC.0/CO.1	-
DF176 Low speed fan assembly circuit	1817	-	-	CC.1/CO.0	-
DF186 Heater plug circuit	1826	-	-	1.DEF	-

GETtheMANUALS.org

WARNING LIGHT MANAGEMENT

Management of instrument panel warning lights according to the faults notified.

Faults	Hexadecimal DTC codes	Level 1 fault warning light (Orange heater plugs "on" indicator light)	Level 2 fault warning light (Red overheating warning light)	No warning light on	OBD warning light lit (Vdiag 18)
DF192 Fuel pressure sensor circuit	1809	-	CC.0/CO.1/ 1.DEF	-	-
DF195 Engine speed/ camshaft sensor consistency	1808	3.DEF/4.DEF	2.DEF	1.DEF	-
DF196 Pedal sensor circuit gang 1	180A	CO.0/CC.1/ 1.DEF	-	2.DEF	-
DF197 Fuel pressure information	1882	-	1.DEF/2.DEF/ 3.DEF/4.DEF/ 5.DEF	-	-
DF198 Pedal sensor circuit gang 2	180B	CO.0/CC.1/ 1.DEF/2.DEF	-	-	-
DF199 Turbocharging pressure sensor	1804	CO.0/CC.1/ 1.DEF/2.DEF	-	-	-
DF200 Atmospheric pressure sensor	1803	-	-	1.DEF/ 2.DEF	-
DF207 Low pressure pump relay circuit	1820	-	-	CC.1/CO.0	-
DF208 Fuel pressure solenoid valve circuit	1822	-	CC.1/CO.0	1.DEF	-
DF209 EGR valve position sensor circuit	180C	1.DEF/2.DEF/ 3.DEF	-	CO.0/CC.1/ 4.DEF	CO.0/CC.1/ 1.DEF/2.DEF/ 3.DEF/4.DEF
DF210 After ignition key signal	182B	1.DEF	-	-	-
DF213 Flywheel signal information consistency	1807	-	-	1.DEF	-
DF215 Analogue/digital converter	1880	1.DEF	-	-	-
DF216 Sensor supply voltage no. 1	180F	1.DEF/2.DEF	-	-	-

GETtheMANUALS.org

WARNING LIGHT MANAGEMENT

Management of instrument panel warning lights according to the faults notified.

Faults	Hexadecimal DTC codes	Level 1 fault warning light (Orange heater plugs "on" indicator light)	Level 2 fault warning light (Red overheating warning light)	No warning light on	OBD warning light lit (Vdiag 18)
DF217 Sensor supply voltage no. 2	1810	1.DEF/2.DEF	-	-	-
DF218 Microcontroller	1885	-	1.DEF/2.DEF	-	-
DF222 Main relay	1813	1.DEF/2.DEF	-	-	-
DF225 Voltage stabiliser	1888	-	1.DEF/2.DEF	-	-
DF226 Damper valve circuit	1889	CO.0	-	CC.1	-
DF227 Swirl flap	1824	1.DEF/CO.0	-	CC.1	-
DF228 Brake signal	1828	-	-	1.DEF	-
DF234 Cruise control/speed limiter function	182C	-	-	1.DEF/ 2.DEF/3.DEF	-
DF238 Thermoplunger no. 3 relay circuit	1836	-	-	CC.1/CO.0	-
DF239 Thermoplunger no. 2 relay circuit	1835	-	-	CC.1/CO.0	-
DF240 Thermoplunger no. 1 relay circuit	1834	-	-	CC.1/CO.0	-
DF253 Flow during self-test after ignition switched off	183A	-	-	1.DEF	-
DF276 Injector code programming	188B	1.DEF/2.DEF	-	-	-
DF301 Air inlet circuit	1815	CC.1/CO.0 1.DEF/2.DEF	-	-	-
DF325 Exhaust gas recirculation function	1814	2.DEF/1.DEF/ 3.DEF/4.DEF	1.DEF	CC.1/CO.0/ 1DEF	1.DEF
DF374 Computer	1886	-	1.DEF/2.DEF	-	-
DF436 Detection of engine misfiring	183B	1.DEF/2.DEF 3.DEF/4.DEF	-	-	-

GETtheMANUALS.org

DF001 PRESENT OR STORED	COOLANT TEMPERATURE SENSOR CIRCUIT CC.0: Short circuit to earth CO.1: Open circuit or short circuit to + 12 volts 1.DEF: Coolant operating temperature not attained

NOTES	**Conditions for applying the fault finding procedure to stored faults for CC.0 or CO.1:** If the fault is declared present after the fault is cleared and a delay of **1 min** with the engine running.
	Special notes: Use bornier **Elé. 1681** for all operations on the connectors of the engine management computer. Measure the actual temperature and compare it to the one displayed on the tool **PR064 Coolant temperature**.

CC.0	***NOTES***	None.

Check the coolant temperature sensor connections.
check the engine management computer connections.
Repair if necessary.

Measure the **resistance** of the coolant temperature sensor between terminals **2** and **3** of its connector.
Replace the sensor if the resistance is not: **2252 Ω ± 112 at + 25˚C**
811 Ω ± 39 at +50˚C
283 Ω ± 8 at 80˚C

Check the **insulation** to **earth** of the connection between:

Engine computer, **connector B track K3** → **track 3** coolant temperature sensor connector

Check **the continuity of the connection** between:

Engine computer **connector B track E1** → **track 2** coolant temperature sensor connector

AFTER REPAIR	Deal with any other faults. Clear the fault memory. Switch off the ignition and carry out a road test followed by a test with the **diagnostic tool**.

GETtheMANUALS.org

DF001 **CONTINUED 1**	

CO.1	***NOTES***	None.

Check the coolant temperature sensor connections.
check the engine management computer connections.
Repair if necessary.

Measure the **resistance** of the coolant temperature sensor between terminals **2** and **3** of its connector.
Replace the sensor if the resistance is not: **2252 Ω ± 112 at + 25˚C**
811 Ω ± 39 at +50˚C
283 Ω ± 8 at 80˚C

Check the **insulation** to **earth** of the connection between:

Engine computer, **connector B track K3** → **track 3** coolant temperature sensor connector

Check **the continuity of the connection** between:

Engine computer **connector B track E1** → **track 2** coolant temperature sensor connector

AFTER REPAIR	Deal with any other faults. Clear the fault memory. Switch off the ignition and carry out a road test followed by a test with the **diagnostic tool**.

GETtheMANUALS.org

DF001 **CONTINUED 2**	

1.DEF	***NOTES***	**Conditions for applying the fault finding procedure to stored faults:** If the fault is declared present after: – the engine is started, – a **4 minute** delay when the engine has been running.
		Special notes: Use a workshop temperature sensor to compare the values.

Check the coolant temperature sensor connections.
check the engine management computer connections.
Repair if necessary.

Measure the **resistance** of the coolant temperature sensor between terminals **2** and **3** of its connector.
Replace the sensor if the resistance is not: **2252 Ω ± 112 at + 25˚C**
811 Ω ± 39 at +50˚C
283 Ω ± 8 at 80˚C

G9T and F9Q engines:
Check the insulation to **earth** of the connection between:

Engine computer, **connector B track K3** ⟶ **track 3** coolant temperature sensor connector

Check the insulation from the **+ 12 V feed** of the connection between:

Engine computer, **connector B track E1** ⟶ **track 2** coolant temperature sensor connector

Check the **continuity and absence of interference resistance** on the following connections:

engine computer, **connector B track E1** ⟶ **track 2** coolant temperature sensor connector

engine computer, **connector B track K3** ⟶ **track 3** coolant temperature sensor connector

Carry out the required operations if the resistance is abnormally high.

If the fault is still present, check that the **thermostat** is working correctly.
Check that the cooling circuit is correctly filled and sealed.
If necessary, see the Workshop Repair Manual **MR 395 Mechanics, 19A Cooling, Removal - Refitting of thermostat**.
Carry out the necessary repairs.

AFTER REPAIR	Deal with any other faults. Clear the fault memory. Switch off the ignition and carry out a road test followed by a test with the **diagnostic tool**.

GETtheMANUALS.org

DF002 PRESENT OR STORED	AIR TEMPERATURE SENSOR CIRCUIT CC.0: Short circuit to earth CO.1: Open circuit or short circuit to + 12 V

NOTES	**Conditions for applying the fault finding procedure to stored faults:** If the fault is declared present after a delay of **2 minutes** with the engine running.
	Special notes: Use bornier **Elé. 1681** for all operations on the connectors of the engine management computer.

CC.0	***NOTES***	None.

Check the air flowmeter connections.
check the engine management computer connections.
Repair if necessary.

Measure the **resistance** of the air temperature sensor between **tracks 1 and 2** of the air flow sensor:
Replace the air flowmeter if the resistance is not: **3714 Ω ± 161 at + 10 °C**
2448 Ω ± 90 at + 20°C
1671 Ω ± 59 at + 30°C

With the air flow sensor disconnected, check **the insulation** in relation to **earth** of the connection between:

Engine computer, **connector B track D3** → **track 1** of the air flowmeter connector

Check **for + 5 V** on **track 3** of the air flowmeter connector.

AFTER REPAIR	Deal with any other faults. Clear the fault memory. Switch off the ignition and carry out a road test followed by a test with the **diagnostic tool**.

GETtheMANUALS.org

DF002 **CONTINUED**	

CO.1	***NOTES***	**Priority when dealing with a number of faults:** In the event of the simultaneous presence of fault **DF056 Air flow sensor circuit CO.0 or 2.DEF**, check that the air flow sensor connector is connected correctly.

Check the air flowmeter connections.
check the engine management computer connections.
Repair if necessary.

Measure the **resistance** of the air temperature sensor between **tracks 1 and 2** of the air flow sensor:
Replace the air flowmeter if the resistance is not: **3714 Ω ± 161 at + 10 ˚C**
2448 Ω ± 90 at + 20˚C
1671 Ω ± 59 at + 30˚C

Check **the continuity and insulation** from **+ 12 V** of the following connections:

Engine computer, **connector B track D3** → **track 1** air flowmeter connector

Engine computer, **connector C track A3** → **track 2** air flowmeter connector

AFTER REPAIR	Deal with any other faults. Clear the fault memory. Switch off the ignition and carry out a road test followed by a test with the **diagnostic tool**.

GETtheMANUALS.org

DF017 PRESENT OR STORED	PRE-POSTHEATING UNIT CONTROL CIRCUIT CC.1: Short circuit to + 12 V CO.0: Open circuit or short circuit to earth

NOTES	**Conditions for applying the fault finding procedure to stored faults:** If the fault becomes present following actuation of the relay by the **AC037 Preheating relay** command.
	Special notes: Use bornier **Elé. 1681** for all operations on the connectors of the engine management computer.

CC.1	***NOTES***	None.

Check the pre-postheating unit connections.
check the engine management computer connections.
Repair if necessary.

Check **for insulation** from **+ 12 V** feed on the connection between:

Engine computer, **connector B track C3** → **track 8** of the preheating unit connector

Check **the continuity and absence of interference resistance** on the connection between:

Engine management computer, **connector B track B3** → **track 9** preheating unit connector

If the fault is still present, replace the pre-postheating unit.

CO.0	***NOTES***	None.

Check the pre-postheating unit connections.
check the engine management computer connections.
Repair if necessary.

Check **the continuity and insulation** to **earth** of the connection between:

Engine computer, **connector B track C3** → **track 8** of the preheating unit connector

Check the **continuity and absence of interference resistance** on the connection between:

Engine management computer, **connector B track B3** → **track 9** preheating unit connector

Check for **+ 12 V battery** on **track 3** of the preheating unit connector.
If the fault is still present, replace the pre-postheating unit.

AFTER REPAIR	Deal with any other faults. Clear the fault memory. Switch off the ignition and carry out a road test followed by a test with the **diagnostic tool**.

GETtheMANUALS.org

DF037 PRESENT OR STORED	ENGINE IMMOBILISER 2.DEF: Engine immobiliser code fault

NOTES	**Conditions for applying fault finding procedures to stored faults:** Apply the fault finding procedure whether the fault is present or stored.

1.DEF	***NOTES***	None.

Perform **fault finding on the multiplex network** in order to ascertain if there are any faulty multiplex connections. Repair if necessary (**see 88B, Multiplex**).

Using the diagnostic tool, check the **UCH** and ensure that it has **correctly learnt its immobiliser code**. **Reconfigure** the UCH if necessary.

Carry out a starting test: if the vehicle does not start, **switch off the ignition and wait 15 seconds** (self-supply period of the computer) then try to start the engine again.
If the fault is still present, repeat the operation three times.

If the fault is still present, contact the Techline.

2.DEF	***NOTES***	None.

Display status **ET341 Immobiliser code programmed**.
If the status is **NO**, Check the immobiliser function and repeat from the start.

If the status is **YES**, clear the fault from the computer memory.
Switch off the ignition, then switch it on again to initialise the computer.

If the fault recurs, contact the Techline.

AFTER REPAIR	Deal with any other faults. Clear the fault memory. Switch off the ignition and carry out a road test followed by a test with the **diagnostic tool**.

GETtheMANUALS.org

DF038 PRESENT OR STORED	COMPUTER 1.DEF: Fault in EEPROM

NOTES	None.

If the fault is **stored** or **present**, clear the fault from the computer memory.
Switch off the ignition, wait until the end of power latch* then switch the ignition back on and re-establish dialogue.

If the fault recurs, contact the Techline.

AFTER REPAIR	Deal with any other faults. Clear the fault memory. Switch off the ignition and carry out a road test followed by a test with the **diagnostic tool**.

GETtheMANUALS.org

DF040 PRESENT OR STORED	CYLINDER 1 INJECTOR CIRCUIT 1.DEF: Overcurrent on injector control current 2.DEF: Undercurrent on the injector control current

NOTES	**Conditions for applying the fault finding procedure to stored faults:** If the fault becomes present following an engine start.
	Special notes: Use bornier **Elé. 1681** for all operations on the connectors of the engine management computer.
	IMPORTANT – please observe the cleanliness guidelines and safety advice.

1.DEF	***NOTES***	None.

Check the connections on injector no 1.
check the engine management computer connections.
Repair if necessary.

Measure the **resistance** of injector no. 1.
Replace the injector if there is a **short circuit (R = 0 Ω)**.

Check the insulation between the following two connections:

Engine computer, connector **C track M1** → **track 2** of the injector no. 1 connector

Engine computer, connector **C track M3** → **track 1** of the injector no. 1 connector

Check insulation to **earth** of the following connection:

Engine computer, connector **C track M3** → **track 1** of the injector no. 1 connector

If the fault is still present: apply **test 10 Poor injector operation**.

AFTER REPAIR	Deal with any other faults. Clear the fault memory. Switch off the ignition and carry out a road test followed by a test with the **diagnostic tool**.

GETtheMANUALS.org

DF040 **CONTINUED**	

2.DEF	***NOTES***	None.

Check the connections on injector no 1.
check the engine management computer connections.
Repair if necessary.

Measure the **resistance** of injector no. 1.
Replace the injector if it is **in short circuit (resistance is measured to infinity)**.

Check the continuity of the following connections:

Engine computer, connector **C track M1** → **track 2** of the injector no. 1 connector

Engine computer, connector **C track M3** → **track 1** of the injector no. 1 connector

If the fault is still present: apply **test 10 Poor injector operation**.

AFTER REPAIR	Deal with any other faults. Clear the fault memory. Switch off the ignition and carry out a road test followed by a test with the **diagnostic tool**.

GETtheMANUALS.org

DF041 PRESENT OR STORED	CYLINDER 2 INJECTOR CIRCUIT 1.DEF: Overcurrent on injector control current 2.DEF: Undercurrent on the injector control current

NOTES	**Conditions for applying the fault finding procedure to stored faults:** If the fault becomes present following an engine start.
	Special notes: Use bornier **Elé. 1681** for all operations on the connectors of the engine management computer.
	IMPORTANT – please observe the cleanliness guidelines and safety advice.

1.DEF	***NOTES***	None.

Check the connections on injector no. 2.
check the engine management computer connections.
Repair if necessary.

Measure the **resistance** of injector no. 2.
Replace the injector if there is a **short circuit (R = 0 Ω)**.

Check the insulation between the following two connections:

Engine computer, **connector C track L4** → **track 2** of the injector no. 2 connector

Engine computer, **connector C track L3** → **track 1** of the injector no. 2 connector

Check insulation to **earth** of the following connection:

Engine computer, connector **C track L3** → **track 1** of the injector no. 2 connector

If the fault is still present: apply **test 10 Poor injector operation**.

AFTER REPAIR	Deal with any other faults. Clear the fault memory. Switch off the ignition and carry out a road test followed by a test with the **diagnostic tool**.

GETtheMANUALS.org

DF041 **CONTINUED**	

2.DEF	***NOTES***	None.

Check the connections on injector no. 2.
check the engine management computer connections.
Repair if necessary.

Measure the **resistance** of injector no. 2.
Replace the injector if it is **in short circuit (resistance is measured to infinity)**.

Check the continuity of the following connections:

Engine computer, connector **C track L4** → **track 2** of the injector no. 2 connector

Engine computer, connector **C track L3** → **track 1** of the injector no. 2 connector

If the fault is still present: apply **test 10 Poor injector operation**.

AFTER REPAIR	Deal with any other faults. Clear the fault memory. Switch off the ignition and carry out a road test followed by a test with the **diagnostic tool**.

GETtheMANUALS.org

DF042 PRESENT OR STORED	CYLINDER 3 INJECTOR CIRCUIT 1.DEF: Overcurrent on injector control current 2.DEF: Undercurrent on the injector control current

NOTES	**Conditions for applying the fault finding procedure to stored faults:** If the fault becomes present following an engine start.
	Special notes: Use bornier **Elé. 1681** for all operations on the connectors of the engine management computer.
	IMPORTANT – please observe the cleanliness guidelines and safety advice.

1.DEF	***NOTES***	None.

Check the connections on injector no. 3.
check the engine management computer connections.
Repair if necessary.

Measure the **resistance** of injector no. 3.
Replace the injector if there is a **short circuit (R = 0 Ω)**.

Check the insulation between the following two connections:

Engine computer, **connector C track M2** → **track 2** of the injector no. 3 connector

Engine computer, **connector C track L2** → **track 1** of the injector no. 3 connector

Check insulation to **earth** of the following connection:

Engine computer, connector **C track L2** → **track 1** of the injector no. 3 connector

If the fault is still present: apply **test 10 Poor injector operation**.

AFTER REPAIR	Deal with any other faults. Clear the fault memory. Switch off the ignition and carry out a road test followed by a test with the **diagnostic tool**.

GETtheMANUALS.org

DF042 **CONTINUED**	

2.DEF	***NOTES***	None.

Check the connections on injector no. 3.
check the engine management computer connections.
Repair if necessary.

Measure the **resistance** of injector no. 3.
Replace the injector if it is **in short circuit (resistance is measured to infinity)**.

Check the continuity of the following connections:

Engine computer, connector **C track M2** → **track 2** of the injector no. 3 connector

Engine computer, connector **C track L2** → **track 1** of the injector no. 3 connector

If the fault is still present: apply **test 10 Poor injector operation**.

AFTER REPAIR	Deal with any other faults. Clear the fault memory. Switch off the ignition and carry out a road test followed by a test with the **diagnostic tool**.

GETtheMANUALS.org

DF043 PRESENT OR STORED	CYLINDER 4 INJECTOR CIRCUIT 1.DEF: Overcurrent on injector control current 2.DEF: Undercurrent on the injector control current

NOTES	**Conditions for applying the fault finding procedure to stored faults:** If the fault becomes present following an engine start.
	Special notes: Use bornier **Elé. 1681** for all operations on the connectors of the engine management computer.
	IMPORTANT – please observe the cleanliness guidelines and safety advice.

1.DEF	***NOTES***	None.

Check the connections on injector no 4.
check the engine management computer connections.
Repair if necessary.

Measure the **resistance** of injector No. 4.
Replace the injector if there is a **short circuit (R = 0 Ω)**.

Check the insulation between the following two connections:

Engine management computer, **connector C track L1** → **track 2** of the injector no. 4 connector

Engine computer, **connector C track M4** → **track 1** of the injector no. 4 connector

Check insulation to **earth** of the following connection:

Engine computer, connector **C track M4** → **track 1** of the injector no. 4 connector

If the fault is still present: apply **test 10 Poor injector operation**.

AFTER REPAIR	Deal with any other faults. Clear the fault memory. Switch off the ignition and carry out a road test followed by a test with the **diagnostic tool**.

GETtheMANUALS.org

DF043 **CONTINUED**	

2.DEF	***NOTES***	None.

Check the connections on injector no 4.
check the engine management computer connections.
Repair if necessary.

Measure the **resistance** of injector No. 4.
Replace the injector if it is **in short circuit (resistance is measured to infinity)**.

Check the continuity of the following connections:

Engine computer, connector **C track L1** → **track 2** of the injector no. 4 connector

Engine computer, connector **C track M4** → **track 1** of the injector no. 4 connector

If the fault is still present: apply **test 10 Poor injector operation**.

AFTER REPAIR	Deal with any other faults. Clear the fault memory. Switch off the ignition and carry out a road test followed by a test with the **diagnostic tool**.

GETtheMANUALS.org

DF046 PRESENT OR STORED	BATTERY VOLTAGE 1.DEF: Battery undervoltage 2.DEF: Battery voltage too high

NOTES	**Conditions for applying the fault finding procedure to stored faults:** If the fault is declared present after: – starting the engine, – a **30 second** delay with the engine running.
	Special notes: If necessary, carry out a complete check of the charging circuit, referring to **Technical Note 6014A Charge circuit fault finding**.

1.DEF	***NOTES***	None.

Reminder on computer operating voltage: **9 V < operating voltage < 14.5 V**.
– Using a voltmeter, take a reading of the battery voltage at its terminals.
– Then compare this with the value displayed on your diagnostic tool in the parameter menu **PR071 Computer supply voltage**.

If there is no difference:

Recharge and test the battery and replace it if it is defective.
Next check the charge circuit.

If there is a difference:
– Check the tightness and the condition of the battery terminals.
– Using the appropriate wiring diagram:

Check the **continuity and for the absence of interference resistance** on the following connections:

+ 12 V battery feed ⟶ tracks **M2** and **M3** of engine management computer connector **B** (via the engine fuse then the **normally open contact** of the central injection unit supply relay).

Battery earth ⟶ tracks **L3, L4, M4** of engine management computer connector **B**.

Carry out the necessary repairs.

2.DEF	***NOTES***	None.

Check the charging circuit, apply **Technical Note 6014A**.
Carry out the necessary repairs.

AFTER REPAIR	Deal with any other faults. Clear the fault memory. Switch off the ignition and carry out a road test followed by a test with the **diagnostic tool**.

GETtheMANUALS.org

DF056 PRESENT OR STORED	AIR FLOWMETER CIRCUIT CO.0: Open circuit or short circuit to earth CC.1: Short circuit to + 12 V 1.DEF: Sensor supply fault 2.DEF: Inconsistent data

NOTES	**Conditions for applying the fault finding procedure to stored faults:** If the fault becomes present after: – ignition is cut-off until the end of the power latch* phase, – the ignition is switched on, or – Vdiag 14, 18 and 1C: a delay of **1 minute** engine running at idle speed with a coolant temperature **> 60˚C**. – Vdiag 10: a delay of **5 minutes** engine running at idle speed with a coolant temperature **> 60˚C**.
	Special notes: Use bornier **Elé. 1681** for all operations on the connectors of the engine management computer.

CO.0	***NOTES***	**Priorities when dealing with a number of faults:** In the event of the simultaneous presence of fault **DF002 Air temperature sensor circuit CO.1**, check that the air flow sensor connector is connected correctly.

Check the air flowmeter connections.
check the engine management computer connections.
Repair if necessary.

Check the **continuity and insulation** to **earth** of the following connection:

Engine computer, **connector B track H4** ⟶ **track 5** of the air flow sensor connector

Check for the **+ 5 V** feed on **track 3** of the air flow sensor connector.
Check **the following insulations:**
- between **tracks 5 and 6** of the air flowmeter connector,
- between **tracks 2 and 5** of the air flow sensor connector.

Carry out the necessary repairs.

With the flow sensor **connected, the vehicle ignition on** and **the engine stopped**:
Check the voltage between **tracks 2** and **5** of the air flowmeter.
– If the voltage is not approximately **0.6 V ± 0.1**, replace the air flowmeter.

Remove the air flowmeter.
– Apply **test 5 Air flowmeter**.

***** The immobiliser warning light will flash a few seconds after the ignition is switched off.

AFTER REPAIR	Deal with any other faults. Clear the fault memory. Switch off the ignition and carry out a road test followed by a test with the **diagnostic tool**.

GETtheMANUALS.org

DF056 **CONTINUED 1**	

CC.1	***NOTES***	None.

Check the air flowmeter connections.
Check the engine management computer connections.
Repair if necessary.

Check **the insulation** against **+ 12 V** of the connection between:

Engine computer, **connector B track H4** → **track 5** of air flow sensor connector

Check the continuity of the following connection:

Engine computer, **connector C track A3** → **track 2** of the air flowmeter connector

If the fault is still present, replace the air flowmeter.

1.DEF	***NOTES***	**Priorities when dealing with a number of faults:** Use the interpretation of fault **DF216 Sensor feed voltage no. 1** first if it is present or stored.

Check the air flowmeter connections.
Check the engine management computer connections.
Repair if necessary.

Check the **insulation and continuity** of the connection between:

Engine computer, connector **B track G2** → **track 3** air flowmeter connector

Check the following **insulations**:
- between **tracks 3 and 6** of the air flow sensor connector,
- between **tracks 3 and 2** of the air flow sensor connector,
- between **tracks 3 and 4** of the air flow sensor connector.

Check for the **+ 12 V after relay** feed on **track 4** of the air flow sensor connector.
Check the presence of the following **earths:**

Electronic (coming from the electronic unit) → on **track 2** of the air flowmeter connector

Chassis (body) → on **track 6** of the air flowmeter connector

If the fault is still present, replace the air flowmeter.

AFTER REPAIR	Deal with any other faults. Clear the fault memory. Switch off the ignition and carry out a road test followed by a test with the **diagnostic tool**.

GETtheMANUALS.org

DF056 **CONTINUED 2**	

2.DEF	***NOTES***	**Conditions for applying the fault finding procedure to stored faults:** If the fault is declared present after: – starting the engine, an increase in temperature at idle speed exceeding **60˚C** followed by a delay of **40 seconds** or, – if it reappears as stored after clearing the fault, starting the engine, switching the ignition off, followed by the end of the power latch* phase and switching the ignition on.

Check the air flowmeter connections.
Check the engine management computer connections.
Repair if necessary.

Check **the continuity and insulation** of the connections between:

Engine computer, **connector B track G2** → **track 3** air flowmeter connector

Engine computer, **connector B track H4** → **track 5** of air flow sensor connector

Check for the **+ 5 V** feed on **track 3** of the air flow sensor connector.
Check for the **+ 12 V after relay** feed on **track 4** of the air flow sensor connector.
Check for **an earth** on **track 6** of the air flow sensor connector.
Use the interpretation of parameter **PR132 Air flow** explained in this note, at warm idle speed (coolant temperature > **80˚C**).
Carry out the necessary repairs.

● **Check the entire air inlet circuit:** apply **test 4**:
– Air filter unit inlet not blocked and filter not clogged.
– **No** foreign bodies on the air flow sensor grille (**visual inspection only**).
Otherwise, replace the air flowmeter.
– Oil vapour recirculation circuit connection conformity.
– **Low** and **high pressure** air circuit **sealed** and **not obstructed**: Pipes, mounting clamps present and tightened, turbocharger pressure sensor fitted, heat exchanger etc.

– Check that the damper valve is open (valve control **rests on the body** of the air vent unit).
– Check that the turbulence flap is in the rest position (**AC013 Turbulence flap**, step B), if fitted to the vehicle.
With the flow sensor **connected**, the vehicle **ignition on** and **engine stopped**:
– Check the voltage between **tracks** 2 and **5** of the air flow sensor,
If the value is not **0.6 V ± 0.1**, replace the air flow sensor.
Check the exhaust gas recirculation valve operation:
Apply **test 9**, part A.

* The immobiliser warning light will flash a few seconds after the ignition is switched off.

AFTER REPAIR	Deal with any other faults. Clear the fault memory. Switch off the ignition and carry out a road test followed by a test with the **diagnostic tool**.

GETtheMANUALS.org

DF057 PRESENT OR STORED	WATER IN DIESEL FUEL DETECTOR CIRCUIT 1.DEF: Open circuit on the line or water in diesel fuel

NOTES	**Fault finding procedure application conditions:** Present or stored fault. **IMPORTANT** **please observe the cleanliness guidelines and safety advice.**

Check that there is no water in the fuel filter. Bleed the fuel filter and the low and high pressure diesel circuit if necessary.
Check for **continuity and the absence of interference resistance** on the connection between:

Engine management computer, **connector A track H1** ⟶ **track 3** of the water detection sensor

– **Check the power supply** to the water detection sensor:

+ 12 V after relay ⟶ **track 1** of the water detection sensor

earth ⟶ **track 2** of the water detection sensor

– Carry out the necessary repairs.

A) Make sure the water in diesel fuel detection sensor is properly connected.
– If not, clear the fault.
– Carry out a road test (speed > **12 mph (20 km/h)** and engine speed > **1200 rpm**) for more than **30 seconds**.
– If the fault does not recur*, end the fault finding procedure.*
– If the fault does recur, go to **step B**.

B) If the sensor is correctly connected:
– Bleed the diesel filter unit ((For Vel-Satis ph1: see MR 353 Mechanical systems, 13A, Fuel supply), (for Vel-Satis ph2: see MR 402 Mechanical Systems, 13A, Fuel supply), (for Laguna II ph1: see MR 339 Mechanical Systems, 13A, Fuel supply - Diesel system), (for Espace IV ph1: see MR 361 Mechanical Systems,13A, Fuel Supply)).
– Clear the fault.
– Start the vehicle (engine speed > **750 rpm**) and wait **60 seconds** at idle speed to confirm the repair.
– If the fault does not recur*, end the fault finding procedure.*
– ensure that the correct fuel is being used.
– Run **test 12 Diesel fuel conformity check**.

See following page.

AFTER REPAIR	Deal with any other faults. Clear the fault memory. Switch off the ignition and carry out a road test followed by a test with the **diagnostic tool**.

GETtheMANUALS.org

DF057 **CONTINUED**	

If none of these checks reveal any faults:

– Replace the water detection sensor (see Workshop Repair Manual, section **13A**).
– Clear the fault.
– Start the vehicle (engine speed > 750 rpm) and wait **60 seconds** at idle speed to confirm the repair.

Note:
When the water level in the fuel filter unit is below the sensor electrodes, some driving conditions (turning, a slope) may cause ***erratic activation of the injection fault warning light*** *(in fact, the sensor's off-centre position in the fuel filter unit, combined with the driving condition factors, triggers the water detection, causing the light to come on).*

AFTER REPAIR	Deal with any other faults. Clear the fault memory. Switch off the ignition and carry out a road test followed by a test with the **diagnostic tool**.

GETtheMANUALS.org

DF068 PRESENT OR STORED	SWIRL FLAP CONTROL CIRCUIT CC.1: Short circuit to + 12 V 1.DEF: Permanent low level 2.DEF: Inconsistency

NOTES	**Conditions for applying the fault finding procedure to CC.1 stored:** If the fault becomes present after running actuator command **AC013 Swirl flap**.
	Special notes: – Use bornier **Elé. 1681** for all operations on the connectors of the engine management computer.

CC.1	***NOTES***	None.

Check the swirl flap solenoid valve connections.
check the engine management computer connections.
Repair if necessary.

Measure the **resistance** of the swirl flap solenoid valve coil between **tracks 1** and **2**.
Replace the solenoid valve if its resistance is not approximately: **46 Ω ± 3 at + 25˚C**.

Check **the insulation** against **+ 12 V** of the connection between:

Engine management computer, **connector C** **Track H4** → **track 1** of the solenoid valve connector

If the fault is still present, replace the swirl flap solenoid valve.

AFTER REPAIR	Deal with any other faults. Clear the fault memory. Switch off the ignition and carry out a road test followed by a test with the **diagnostic tool**.

GETtheMANUALS.org

DF068 **CONTINUED 1**	

1.DEF	***NOTES***	None.

Check the swirl flap solenoid valve connections.
check the engine management computer connections.
Repair if necessary.

Measure the **resistance** of the swirl flap solenoid valve coil between **tracks 1** and **2**.
Replace the solenoid valve if its resistance is not approximately: **46 Ω ± 3 at + 25˚C**.

Check the **continuity** and **insulation** to **earth** of the connection between:

Engine management computer, **connector C** **Track H4** → **track 1** of the solenoid valve connector

If the fault is still present, replace the swirl flap solenoid valve.

2.DEF	***NOTES***	None.

Check the swirl flap solenoid valve connections.
check the engine management computer connections.
Repair if necessary.

Clear the stored fault.
Use actuator command **AC013 Swirl flap** and check that the flap is working properly.
If the fault reappears after the command, replace the swirl flap.
If the swirl flap is correct, check the conformity of the air inlet circuit: apply **test 4: Turbocharged air inlet circuit test**.

If the fault is still present, contact the Techline.

AFTER REPAIR	Deal with any other faults. Clear the fault memory. Switch off the ignition and carry out a road test followed by a test with the **diagnostic tool**.

GETtheMANUALS.org

DF070 STORED	CLUTCH SWITCH CIRCUIT 1.DEF: Inconsistency of the signal

1.DEF	***NOTES***	**Conditions for applying the fault finding procedure to stored faults:** If the fault becomes present during a road test at speeds above **60 mph (100 km/h))**.
		Special notes: Use bornier **Elé. 1681** bornier for all operations on the connector of the engine management computer.

Check the clutch switch connections.
check the engine management computer connections.
Repair if necessary.

Step 1

A) - Check status **ET233 CLUTCH PEDAL**. Depress the clutch pedal and note whether this status becomes **DEPRESSED**.

If it changes to DEPRESSED.

Clear the fault, switch off the ignition, wait for the end of the power latch* and switch on the ignition again. Carry out a road test and then take a fault reading. If the fault reappears, go to step 2. If not, end of fault finding.

If it does not change to DEPRESSED.

B) - Check the switch adjustment.

– Check **the continuity and insulation** to **earth** of the connection between:

Engine computer, **connector A track E2** ⟶ **track 1** clutch switch

– Check for an **earth** on **track B3** of the clutch switch.

Repair if necessary.

Check the operation of the clutch switch:

Closing of the contact between **tracks 1 and 2** when the clutch pedal is pressed.

Opening of the contact between **tracks 1 and 2** when the clutch pedal is released.

Replace the switch if necessary.

When repair is complete, return to step **A**.

Note:

Status **ET233 CLUTCH PEDAL** displays **NONE** if the vehicle is fitted with an automatic gearbox or a sequential gearbox.

Step 2

– If the fault recurs, contact the Techline.

* The immobiliser warning light will flash a few seconds after the ignition is switched off.

AFTER REPAIR	Deal with any other faults. Clear the fault memory. Switch off the ignition and carry out a road test followed by a test with the **diagnostic tool**.

GETtheMANUALS.org

DF098 PRESENT OR STORED	FUEL TEMPERATURE SENSOR CIRCUIT CC.0: Short circuit to earth CO.1: Open circuit or short circuit to + 12 V

NOTES	**Conditions for applying the fault finding procedure to stored faults:** If the fault is declared present after a delay of **2 minutes** with the engine running.
	Special notes: Use bornier **Elé. 1681** for all operations on the connectors of the engine management computer.

CC.0	***NOTES***	None.

Check the fuel temperature sensor connections.
check the engine management computer connections.
Repair if necessary.

Measure the **resistance** of the fuel temperature sensor between **tracks 1** and **2**:
Replace the sensor if its resistance is not: **3820 Ω ± 282 at + 10˚C**
2050 Ω ± 100 at + 25˚C
810 Ω ± 47 at + 50˚C

Check the **insulation** against **earth** of the connection between:

Engine computer, **connector B track J3** ⟶ **track 1** fuel temperature sensor connector

AFTER REPAIR	Deal with any other faults. Clear the fault memory. Switch off the ignition and carry out a road test followed by a test with the **diagnostic tool**.

GETtheMANUALS.org

DF098 **CONTINUED**	

CO.1	***NOTES***	None.

Check the fuel temperature sensor connections.
Check the computer connections.
Repair if necessary.

Measure the **resistance** of the fuel temperature sensor between its **tracks 1 and 2**:
Replace the sensor if its resistance is not: **3820 Ω ± 282 at + 10˚C**
2050 Ω ± 100 at + 25˚C
810 Ω ± 47 at + 50˚C

Check **the continuity and insulation** from **+ 12 V** of the following connections:

Engine computer, connector **B track J3** → **track 1** fuel temperature sensor connector

Engine computer, connector **B track G1** → **track 2** fuel temperature sensor connector

AFTER REPAIR	Deal with any other faults. Clear the fault memory. Switch off the ignition and carry out a road test followed by a test with the **diagnostic tool**.

GETtheMANUALS.org

DF176 PRESENT OR STORED	LOW-SPEED FAN ASSEMBLY CIRCUIT CC.1: Short circuit to + 12 V CO.0: Open circuit or short circuit to earth

NOTES	**Conditions for applying the fault finding procedure to stored faults:** The fault reappears after: – clearing the fault from the memory, – actuation of the relay by the **AC038 Low speed fan assembly relay** command.
	Special notes: – Use bornier **Elé. 1681** for all operations on the connector of the engine management computer. – Please refer to the Technical Note **Wiring diagrams** for your vehicle to locate the fuses and relays concerned.

CC.1	***NOTES***	None.

Check the connections of the low-speed fan assembly relay mounting. check the engine management computer connections. Repair if necessary.
Measure **the resistance** of the low-speed fan assembly relay coil. Replace the relay if its resistance is not: **60 Ω± 5 at + 20˚C**.
Remove the low-speed relay and check **for insulation** from **+ 12 V** on the connection between: Engine computer, **connector C track A2** ⟶ **track 11** of the low speed fan assembly relay

CO.0	***NOTES***	None.

Check the connections of the low-speed fan assembly relay mounting. check the engine management computer connections. Repair if necessary.
Measure **the resistance** of the low-speed fan assembly relay coil. Replace the relay if its resistance is not: **60 Ω ± 5 at + 20˚C**.
Remove the low-speed relay and check **the continuity and insulation** to earth of the connection between: Engine computer, **connector C track A2** ⟶ **11** of the low speed fan assembly relay **Check for + 12 V after relay** feed on **track 10** of the low speed fan assembly relay.

AFTER REPAIR	Deal with any other faults. Clear the fault memory. Switch off the ignition and carry out a road test followed by a test with the **diagnostic tool**.

GETtheMANUALS.org

DF186 PRESENT OR STORED	HEATER PLUG CIRCUIT 1.DEF: Heater plug(s) faulty or in open circuit

NOTES	**Conditions for applying the fault finding procedure to stored faults:** The fault reappears after: – clearing the fault from the memory, – controlling the heater plugs using command **AC037 Preheating relay**.
	Special notes: Use bornier **Elé. 1681** for all operations on the connectors of the engine management computer. – see the **Wiring diagrams** Technical Note for the vehicle to locate the fuses and relays concerned.
	IMPORTANT – please observe the cleanliness guidelines and safety advice.

1.DEF	***NOTES***	**Priority when dealing with a number of faults:** Firstly, deal with **DF216 Supply voltage No. 1 of the sensors** if this is present.

Check the pre-postheating unit connections.
Check the connections on all the heater plugs.
Repair if necessary.

– Measure **the resistance** of the heater plugs:
  Replace the plug if its resistance is **> 2 Ω**.
– Check the **continuity** of the following connections:

preheating unit **track 1** → **cylinder 3** heater plug

preheating unit **track 2** → **cylinder 4** heater plug

preheating unit **track 6** → **cylinder 1** heater plug

preheating unit **track 7** → **cylinder 2** heater plug

– **Check for** the **+ 12 V battery feed** on **track 3** of the preheating relay (via maxi fuse).
– Check the engine earthing.

See following page.

AFTER REPAIR	Deal with any other faults. Clear the fault memory. Switch off the ignition and carry out a road test followed by a test with the **diagnostic tool**.

GETtheMANUALS.org

DF186 **CONTINUED**	

check the engine management computer connections.
Check the **continuity and absence of interference resistance** on the connection (preheating relay unit control line) between:

Engine management computer, **connector B track B3** → **track 9** preheating unit connector

Check each heater plug current on F9Q engines:
– With the engine stopped, disconnect the coolant temperature sensor (change to defect mode).
– **Warning: defect mode causes the engine cooling fans to operate.**
– Start the engine.
– 5 to 10 seconds later, check the current in one heater plug with a current clamp (**Voltmeter/ammeter** menu on the Clip Technic tool or using a separate current clamp).
– Replace the heater plug if the current is **< 8.5 A** and **> 13 A**.
– Do the same for the three other heater plugs.
– Switch off the engine.
– Reconnect the coolant temperature sensor.
– Clear the faults.
If the fault is still present, contact the Techline.

AFTER REPAIR	Deal with any other faults. Clear the fault memory. Switch off the ignition and carry out a road test followed by a test with the **diagnostic tool**.

GETtheMANUALS.org

DF192 PRESENT OR STORED	FUEL PRESSURE SENSOR CIRCUIT CC.0: Short circuit to earth CO.1: Open circuit or short circuit to + 12 V 1.DEF: Sensor supply fault

NOTES	**Conditions for applying the fault finding procedure to stored faults:** If the fault is declared present after a delay of **5 minutes** with the engine running.
	Special notes: Use bornier **Elé. 1681** for all operations on the connectors of the engine management computer.
	IMPORTANT – **Checks on the ohmmeter are not authorised for the fuel pressure sensor.** – please observe the cleanliness guidelines and safety advice.

CC.0	***NOTES***	None.

Check the fuel pressure sensor connections.
check the engine management computer connections.
Repair if necessary.

Check the **insulation** to **earth** of the connection between:

Engine computer, **connector B track D1** → **track 2** of the fuel pressure sensor connector

Check **the continuity of the connection** between:

Engine computer, **connector B track H2** → **track 3** of the fuel pressure sensor connector

If the fault is still present, replace the fuel pressure sensor.

AFTER REPAIR	Deal with any other faults. Clear the fault memory. Switch off the ignition and carry out a road test followed by a test with the **diagnostic tool**.

GETtheMANUALS.org

DF192 **CONTINUED 1**	

CC.1	***NOTES***	None.

Check the fuel pressure sensor connections.
check the engine management computer connections.
Repair if necessary.

Check **the continuity and the insulation** against **+12 V** of the connection between:

Engine management computer, connector **B** **track D1** → **track 2** of the fuel pressure sensor connector

Check **the continuity of the connection** between:

Engine management computer, connector **C** **track B3** → **track 1** of the fuel pressure sensor connector

If the fault is still present, replace the fuel pressure sensor.

AFTER REPAIR	Deal with any other faults. Clear the fault memory. Switch off the ignition and carry out a road test followed by a test with the **diagnostic tool**.

GETtheMANUALS.org

DF192 **CONTINUED 2**	

1. DEF	***NOTES***	**Priorities when dealing with a number of faults:** Firstly, apply the interpretation of the **DF216 Sensor supply voltage no. 1** fault, if it is present.

Check the fuel pressure sensor connections.
check the engine management computer connections.
Repair if necessary.

Check the **continuity and absence of interference resistance** on the following connections:

Engine computer, **connector B track D1** → **track 2** of the fuel pressure sensor connector

Engine computer, **connector B track H2** → **track 3** of the fuel pressure sensor connector

Engine computer, **connector C track B3** → **track 1** of the fuel pressure sensor connector

Carry out the necessary repairs.
If all these connections are correct, check there is a fuel pressure sensor power supply:

+ 5 V → **track 3** of the fuel pressure sensor connector

Earth → **track 1** of the fuel pressure sensor connector

If the connections and supplies are correct, replace the fuel pressure sensor.

AFTER REPAIR	Deal with any other faults. Clear the fault memory. Switch off the ignition and carry out a road test followed by a test with the **diagnostic tool**.

GETtheMANUALS.org

DF195 PRESENT OR STORED	CAMSHAFT SENSOR / ENGINE SPEED CONSISTENCY 1.DEF: Feed fault, signal interference, camshaft sensor internal fault 2.DEF: Absence of engine speed signal or interference on engine speed signal 3.DEF: Engine speed signal interference, broken tooth on flywheel or engine speed sensor internal fault 4.DEF: Absence of camshaft signal or timing fault (belt tension or setting)

NOTES	**Conditions for applying the fault finding procedure to stored faults:** The fault is declared present after: – **10 seconds** with the starter active, or – a delay of **1 minute** with the engine running.
	Special notes: – Use bornier **Elé. 1681** for any operations on the computer connector. – Check the charge circuit (see **Technical Note 6014A Charge circuit fault finding**) and check the stability of the charging voltage using an oscilloscope. – Interference could be caused by the alternator or starter motor. If it is possible to start the vehicle by pushing it, one of these components could be involved.

1.DEF	***NOTES***	**Priorities when dealing with a number of faults:** Firstly, apply the interpretation of fault **DF046 Battery voltage**, if it is present.

Check **the continuity and presence** of feed between **tracks 1 and 3** of the **camshaft sensor** connector:

+ 12 V after relay ⟶ **Track 3** of the camshaft sensor connector

Earth ⟶ **track 1** of the camshaft sensor connector

Check **the continuity and absence of interference resistance** on the connection between:

Engine management computer, **connector C track K4** ⟶ **track 2** of the camshaft sensor connector

Repair if necessary.

Display the conformity of the camshaft signal using an oscilloscope: square pulse signal, amplitude: **battery voltage - 50 mV** (for your information, if V bat = 12.6 V, the amplitude is 12.54 V).
If the check reveals interference, check the conformity of the engine earths (oxidation, tightness, etc.).
If the fault is still present, check that the sensor is correctly fitted and in good condition (overheating).
If necessary replace the sensor.

AFTER REPAIR	Deal with any other faults. Clear the fault memory. Switch off the ignition and carry out a road test followed by a test with the **diagnostic tool**.

GETtheMANUALS.org

DF195 **CONTINUED 1**	

2.DEF	***NOTES***	None.

Check the **engine speed sensor** connections.
Check the engine management computer connections.
Repair if necessary.

Measure **the resistance** of the engine speed sensor between **tracks A and B on F9Q engines**.
Replace the sensor if its resistance is not **800 Ω ± 80 at + 20˚C**.
Measure **the resistance** of the engine speed sensor between **tracks 1 and 2 on G9T engines**.
Replace the sensor if its resistance is not **235 Ω ± 35 at + 23˚C**.

Check **the continuity** of the following connections **on F9Q engines**:

Engine computer, **connector B track G3** ⟶ **track A** of the engine speed sensor

Engine computer, **connector B track H3** ⟶ **track B** of the engine speed sensor

Check the **continuity** of the following connections on **G9T/G9U engines**:

Engine computer, **connector B track G3** ⟶ **track** 1 of the engine speed sensor

Engine computer, **connector B track H3** ⟶ **track 2** of the engine speed sensor

Check that the engine earthing is in order (oxidation, tightness, etc.).
Check the mounting, the air gap (if necessary refer to the information in the Workshop Repair Manuals for the vehicle) and the condition of the sensor (overheating).
During the starting phase, display **PR055 Engine speed** and check that there is no interference (micro-breaks).
Replace if necessary.

AFTER REPAIR	Deal with any other faults. Clear the fault memory. Switch off the ignition and carry out a road test followed by a test with the **diagnostic tool**.

GETtheMANUALS.org

DF195 **CONTINUED 2**	

3.DEF	***NOTES***	None.

Check the **engine speed sensor** connections.
Check the engine management computer connections.
Repair if necessary.

Measure **the resistance** of the engine speed sensor between **tracks A and B on F9Q engines**.
Replace the sensor if its resistance is not **800 Ω ± 80 at 20˚C**.
Measure the **resistance** of the engine speed sensor between **tracks 1 and 2 on G9T/G9U engines**.
Replace the sensor if its resistance is not **235 Ω ± 35 at + 23˚C**.

Check that the engine earthing is in order (oxidation, tightness, etc.).
Check **the continuity** of the following connections **on F9Q engines**:

Engine computer, **connector B track G3** ⟶ **track A** of the engine speed sensor

Engine computer, **connector B track H3** ⟶ **track B** of the engine speed sensor

Check the **continuity** of the following connections on **G9T/G9U engines**:

Engine computer, **connector B track G3** ⟶ **track** 1 of the engine speed sensor

Engine computer, **connector B track H3** ⟶ **track 2** of the engine speed sensor

Perform a visual inspection of the flywheel and the target (broken tooth, damaged tooth, warped flywheel).
Check that the engine speed signal is correct using an oscilloscope: no interference, broken tooth, etc.
Carry out the necessary repairs.

AFTER REPAIR	Deal with any other faults. Clear the fault memory. Switch off the ignition and carry out a road test followed by a test with the **diagnostic tool**.

GETtheMANUALS.org

DF195 **CONTINUED 3**	

4.DEF	***NOTES***	None.

Check the camshaft sensor connections.
Check the engine management computer connections.
Repair if necessary.

Check the **continuity** of the following connections:

Engine computer, **connector C track K4** → **track 2** of the camshaft sensor connector

Engine management computer, **connector C track C1** → **track 1** of the camshaft sensor connector

Check **for + 12 V after relay feed** on **track 3** of the camshaft sensor connector.

– Check the tension of the **timing belt**.
– Check the conformity of the camshaft sprocket/camshaft assembly.
– Check the timing adjustment.

On **G9T engines** and if working on the timing gear: **camshaft/high-pressure pump:**

– Make sure the high pressure pump sprocket has been properly refitted.

Carry out the necessary repairs.

AFTER REPAIR	Deal with any other faults. Clear the fault memory. Switch off the ignition and carry out a road test followed by a test with the **diagnostic tool**.

GETtheMANUALS.org

DF196 PRESENT OR STORED	PEDAL SENSOR CIRCUIT GANG 1 CO.0 : Open circuit or short circuit to earth CC.1 : Short circuit to + 12 V 1.DEF: Sensor supply fault 2.DEF: Inconsistent signal

NOTES	**Conditions for applying the fault finding procedure to stored faults:** If the fault is declared present following a series of actions on the accelerator pedal at full load or with no load.
	Special notes: Use bornier **Elé. 1681** for all operations on the connectors of the engine management computer. see the **Wiring diagrams** Technical Note for the vehicle to locate the **electrical connections and connectors** concerned.

CO.0	***NOTES***	**Priorities when dealing with a number of faults:** In the event of the simultaneous presence of fault **DF198 Pedal sensor circuit gang 2 CO.0**, check that the pedal sensor connector is connected correctly.

Check the pedal sensor connections.
Check the engine management computer connections.
Repair if necessary.

Measure the **resistance** of the pedal sensor gang 1 between **tracks 2 and 4**.
Replace the sensor if the resistance is not **1.2 kΩ ± 0.48 at + 20˚C**.

Check **the continuity and insulation** to **earth** of the connection between:

Engine computer, **connector A track C1** → **track 3** of the pedal sensor connector

Also check that this connection is **insulated** against the following connections:

Engine computer, **connector A track B3** → **track 2** of the pedal sensor connector

Engine computer, **connector A track A3** → **track 1** of the pedal sensor connector

Check **the continuity of the connection** between:

Engine computer, connector **A track E1** → **track 4 of the** pedal sensor connector

AFTER REPAIR	Deal with any other faults. Clear the fault memory. Switch off the ignition and carry out a road test followed by a test with the **diagnostic tool**.

GETtheMANUALS.org

DF196 **CONTINUED 1**	

CC.1	***NOTES***	None.

Check the pedal sensor connections.
Check the engine management computer connections.
Repair if necessary.

Measure the **resistance** of the pedal sensor gang 1 between **tracks 2 and 4**.
Replace the sensor if the resistance is not **1.2 kΩ ± 0.48 at + 20˚C**.

Check **for insulation** from **+ 12 V** feed on the connection between:

Engine computer, **connector A track C1** → **track 3** of the pedal sensor connector

Check **the continuity of the connection** between:

Engine computer, **connector A track B3** → **track 2** of the pedal sensor connector

1.DEF	***NOTES***	**Priorities when dealing with a number of faults:** Use the interpretation of fault **DF216 Sensor feed voltage no. 1** first if it is present or stored.

Check the pedal sensor connections.
Check the engine management computer connections.
Repair if necessary.

– Check the **continuity and for the absence of interference resistance** on the following connections:

Engine computer, **connector A track E1** → **track 4 of the** pedal sensor connector

Engine computer, **connector A track C1** → **track 3** of the pedal sensor connector

Engine computer, **connector A track B3** → **track 2** of the pedal sensor connector

– Check **the insulation** between the following two connections:

Engine computer, **connector A track E1** → **track 4 of the** pedal sensor connector

Engine computer, **connector A track B3** → **track 2** of the pedal sensor connector

– Also check that they are insulated against **+ 12 V feed**.
– If the fault is still present, carry out an accelerator pedal sensor conformity check.

AFTER REPAIR	Deal with any other faults. Clear the fault memory. Switch off the ignition and carry out a road test followed by a test with the **diagnostic tool**.

GETtheMANUALS.org

DF196 **CONTINUED 2**	

2.DEF	***NOTES***	**Priority when dealing with a combination of faults:** Apply the interpretation of faults **DF 198 Pedal sensor circuit gang 2, 2.DEF and DEF 228 Brake signals** first if they are present or stored.

Check the pedal sensor connections.
Check the engine management computer connections.
Repair if necessary.

Check **the continuity** and **absence of interference resistance** on the following connection:

Engine computer, **connector A track C1** ⟶ **track 3** of the pedal sensor connector

Also **check the insulation from the + 12 V feed.**

If the fault is still present, go to the accelerator pedal sensor conformity check.

AFTER REPAIR	Deal with any other faults. Clear the fault memory. Switch off the ignition and carry out a road test followed by a test with the **diagnostic tool**.

GETtheMANUALS.org

DF197 PRESENT OR STORED	FUEL PRESSURE SIGNAL 1.DEF: Measured pressure too high 2.DEF: Measured pressure too low 3.DEF: Detection of leak at high pressure 4.DEF: Fuel overpressure 5.DEF: Pressure drop in the rail

NOTES	**Conditions for applying the fault finding procedure to stored faults:** The fault is declared present after a delay of **5 minutes** with the engine running at different speeds.
	Special notes: Use bornier **Elé. 1681** for all operations on the connectors of the engine management computer.
	IMPORTANT – **Checks on the ohmmeter are not authorised for the fuel pressure sensor.** – **Please observe the cleanliness guidelines and safety advice.**

1.DEF ***4.DEF***	***NOTES***	**Priority when dealing with a number of faults:** Treat as a priority any other fault that is present or stored.
		Special notes: If the fault follows a period of underpressure, a loop variation or an operation on the pump or unpriming at low pressure, **do not take the fault into account**. Clear the fault. Warm engine: start the engine and leave it running at idle speed **(1 minute)**. If the fault appears, perform the fault finding procedure explained below. Otherwise, carry out a road test at a speed above **3000 rpm** (stay above this value for at least **10 seconds** to display the fault). If the fault recurs, perform the fault finding procedure given below.

Check the fuel pressure sensor connections.
Check the fuel pressure solenoid valve connections.
Check the engine management computer connections.
Repair if necessary.
See following page.

AFTER REPAIR	Deal with any other faults. Clear the fault memory. Switch off the ignition and carry out a road test followed by a test with the **diagnostic tool**.

GETtheMANUALS.org

DF197 **CONTINUED 1**	

Check the following connection for **insulation, continuity and make sure there is no extraneous resistance**:

Engine computer, **connector B track L1** → **track 2** fuel pressure solenoid valve connector

Check **for insulation** against **+ 5 V** on the connection between:

Engine computer, **connector B track D1** → **track 2** fuel pressure sensor connector

Clear the fault.
– Use the **AC035 Fuel pressure solenoid valve** command:
You should be able to feel vibrations on the fuel pressure regulator. Otherwise, go to the fault finding procedure for **AC035**, step 1.
The presence of air in the circuit is likely to lead to this type of fault. Apply test 3.

With the CP3 high pressure pump, check that the **fuel priming pump** is not fed when the engine is running.
Check that there are no air bubbles in the diesel fuel low pressure circuit.
Check the pressure regulating solenoid valve using part B of **ALP7 Rough idle**.
If the fault is still present, replace the high pressure pump.

If the problem is still present, contact the Techline.

AFTER REPAIR	Deal with any other faults. Clear the fault memory. Switch off the ignition and carry out a road test followed by a test with the **diagnostic tool**.

GETtheMANUALS.org

DF197 **CONTINUED 2**	

2.DEF ***3.DEF*** ***5.DEF***	***NOTES***	**IMPORTANT** – **Please observe the cleanliness guidelines and safety advice.**

Check the fuel pressure sensor connections.
Check the fuel pressure solenoid valve connections.
Check the engine management computer connections.
Repair if necessary.

Check **for + 12 V after relay** feed on **track 1** of the fuel pressure solenoid valve.
Check the **insulation, continuity and absence of interference resistance** on the connections between:

Engine computer, **connector B track L1** → **track 2** fuel pressure solenoid valve connector

Engine computer, **connector B track D1** → **track 2** of the fuel pressure sensor connector

Use command **AC035 Fuel pressure solenoid valve**. You should be able to feel vibrations on the fuel pressure solenoid valve. If not, go to interpretation of commands **AC035**, step 1.

With the vehicle ignition on, and engine stopped for over **1 minute**:
– Display **PR038 Rail pressure**.
  – If the value is **less** than **30 bar**, the sensor is correct.
  – If not replace the fuel pressure sensor.

– **Detailed handling of fault finding on the hydraulic circuit:**

Step 1
– Check the connections of the following components:
  * Fuel pressure sensor.
  * Fuel pressure solenoid valve.
  * Computer.
  * Fuel temperature sensor.
  * Diesel fuel filter.
  * Also check the condition of the wiring (wear, kinks, etc.).
– Check that the seal is correctly fitted to the fuel pressure solenoid valve.
If all of the checks reveal no faults, proceed to step 2.

Perform checks on the hydraulic circuit (see following pages).

AFTER REPAIR	Deal with any other faults. Clear the fault memory. Switch off the ignition and carry out a road test followed by a test with the **diagnostic tool**.

GETtheMANUALS.org

DF197 **CONTINUED 3**	

PLEASE OBSERVE THE CLEANLINESS GUIDELINES AND SAFETY ADVICE BEFORE ANY REMOVAL OPERATION.

Checking the fuel Low Pressure system:

Stage 2
Check the Low Pressure circuit: apply **test 3**.
* If the tubes or hoses are worn or damaged, repair them. Otherwise, proceed to stage 3.

Stage 3
– In the event of a correlation between the appearance of the fault and an operation on the fuel filter, rinse the bowl to remove any accumulated impurities.
– Check the condition of the fuel filter:
* If the filter is dirty, replace it. You must clean the fuel filter bowl before fitting the new filter to prevent contamination of the high pressure pump and the high pressure circuit. Go to stage 4.

AFTER REPAIR	Deal with any other faults. Clear the fault memory. Switch off the ignition and carry out a road test followed by a test with the **diagnostic tool**.

GETtheMANUALS.org

DF197 **CONTINUED 4**	

The low pressure circuit has been checked and no faults were detected, otherwise make the necessary repairs.

STAGE 4

– Clear the faults using the CLIP diagnostic tool.
– Start the engine.
– Display **PR038 Rail pressure**.

PR038 > 170 bar when starting?

NO → Check that there are no internal injector leaks using the procedure recommended in **test 10 Poor injector operation**.

Is one of the injectors faulty?

NO → Check that there are no internal leaks in the overpressure valve (with the CP3 high pressure pump only) using the procedure recommended in **test 11 Poor rail overpressure valve operation.**

YES → Replace the faulty injector.

Is the overpressure valve faulty?

NO → Replace* the CP3 high-pressure pump.

YES → Replace the faulty injector rail

YES

Raise the engine temperature so the diesel fuel reaches **50˚C**.
Road test:
Select 3rd or 4th gear, accelerate with your foot to the floor.

Does the engine stall or does the red fault warning light come on?

NO → Contact Techline.

YES → Replace* the CP3 high-pressure pump.

*Note:
Please observe all recommendations made in the repair procedures when removing mechanical and/or electrical components and **observe the cleanliness guidelines and safety advice**.

AFTER REPAIR	Deal with any other faults. Clear the fault memory. Switch off the ignition and carry out a road test followed by a test with the **diagnostic tool**.

GETtheMANUALS.org

DF198 PRESENT OR STORED	PEDAL SENSOR CIRCUIT GANG 2 CO.0 : Open circuit or short circuit to earth CC.1 : Short circuit to + 12 V 1.DEF: Sensor supply fault 2.DEF: Consistency between gang 1 and gang 2

NOTES	**Conditions for applying the fault finding procedure to stored faults:** If the fault is declared present following a series of actions on the accelerator pedal at full load or with no load.
	Special notes: Use bornier **Elé. 1681** for all operations on the connectors of the engine management computer. see the **Wiring diagrams** Technical Note for the vehicle to locate the **electrical connections and connectors** concerned.

CO.0	***NOTES***	**Priorities when dealing with a number of faults:** In the event of the simultaneous presence of the **DF196 Pedal sensor circuit gang 1 CO.0** fault, check that the pedal sensor connector is connected correctly.

Check the pedal sensor connections.
Check the engine management computer connections.
Repair if necessary.

Measure the resistance of pedal sensor gang 2 between **tracks 1 and 5**.
Replace the sensor if the resistance is not: **1.7 kΩ ± 0.68 at + 20˚C**.

Check **the continuity of the connection** between:

Engine computer, **connector A track F1** → **track 6** of the pedal sensor connector

Also check **the insulation** of this connection to **earth** and to the following connections:

Engine computer, **connector A track B3** → **track 2** of the pedal sensor connector

Engine computer, **connector A track A3** → **track 1** of the pedal sensor connector

Check **the continuity of the connection** between:

Engine computer, **connector A track H2** → **track 5** of the pedal sensor connector

AFTER REPAIR	Deal with any other faults. Clear the fault memory. Switch off the ignition and carry out a road test followed by a test with the **diagnostic tool**.

GETtheMANUALS.org

DF198 **CONTINUED 1**	

CC.1	***NOTES***	None.

Check the pedal sensor connections.
Check the engine management computer connections.
Repair if necessary.

Measure the resistance of pedal sensor gang 2 between **tracks 1 and 5**.
Replace the sensor if the resistance is not: **1.7 kΩ ± 0.68 at + 20˚C**.

Check **for insulation** from **+ 12 V** feed on the connection between:

Engine computer, **connector A track F1** ⟶ **track 6** of the pedal sensor connector

Check **the continuity of the connection** between:

Engine computer, **connector A track A3** ⟶ **track 1** of the pedal sensor connector

If the fault is still present, replace the pedal sensor.

1.DEF	***NOTES***	**Priorities when dealing with a number of faults:** Use the interpretation of fault **DF217 Sensor feed voltage No. 2** first if it is present or stored.

Check the pedal sensor connections.
Check the engine management computer connections.
Repair if necessary.

Check the **continuity and for the absence of interference resistance** on the following connections:

Engine computer, **connector A track F1** ⟶ **track 6** of the pedal sensor connector

Engine computer, **connector A track H2** ⟶ **track 5** of the pedal sensor connector

Engine computer, **connector A track A3** ⟶ **track 1** of the pedal sensor connector

Also check that they are insulated against **+ 12 V**.
Check the **insulation** from earth of the connection between:

Engine computer, **connector A track H2** ⟶ **track 5** of the pedal sensor connector

If the fault is still present, replace the pedal sensor.

AFTER REPAIR	Deal with any other faults. Clear the fault memory. Switch off the ignition and carry out a road test followed by a test with the **diagnostic tool**.

GETtheMANUALS.org

DF198 **CONTINUED 2**	

2.DEF	***NOTES***	None.

Check the pedal sensor connections.
Check the engine management computer connections.
Repair if necessary.

Check the **continuity and for the absence of interference resistance** on the following connections:

Engine computer, **connector A track E1** → **track 4 of the** pedal sensor connector

Engine computer, **connector A track C1** → **track 3** of the pedal sensor connector

Engine computer, **connector A track B3** → **track 2** of the pedal sensor connector

Engine computer, **connector A track H2** → **track 5** of the pedal sensor connector

Engine computer, **connector A track F1** → **track 6** of the pedal sensor connector

Engine computer, **connector A track A3** → **track 1** of the pedal sensor connector

Carry out the required operations if the resistance is abnormally high.
If the checks are correct, replace the accelerator pedal sensor.

AFTER REPAIR	Deal with any other faults. Clear the fault memory. Switch off the ignition and carry out a road test followed by a test with the **diagnostic tool**.

GETtheMANUALS.org

DF199 PRESENT OR STORED	TURBOCHARGER PRESSURE SENSOR CO.0: Open circuit or short circuit to earth CC.1: Short circuit to +12 V 1.DEF: Sensor supply fault 2.DEF: Consistency between the turbocharging pressure and the atmospheric pressure

NOTES	**Conditions for applying the fault finding procedure to stored faults:** If the fault is declared present after: – starting the engine or – a road test.
	Special notes: Use bornier **Elé. 1681** for all operations on the connectors of the engine management computer. see the **Wiring diagrams** Technical Note for the vehicle. **WARNING** On some G9 engines, the turbocharging pressure sensor and the air temperature sensor form a single component.

CO.0	***NOTES***	None.

Check the turbocharger pressure sensor connections.
Check the engine management computer connections.
Repair if necessary.

Check **the continuity and insulation** to **earth** of the connection between:

Engine computer, **connector B track C1** → **track B or 3** turbocharging pressure sensor connector

Also check the continuity of the connection between:

Engine computer, **connector B track J2** → **track C or 1** turbocharging pressure sensor connector

Tracks A, B and C of the turbocharging pressure sensor: F9Q 650, F9Q 750, F9Q 752, F9Q 754 engines. Tracks 1, 2 and 3 of the turbocharger pressure sensor: F9Q 751, F9Q 680, F9Q 820, G9T 702, G9T 703, G9T 742 and G9T 743 engines.

If the fault is still present, replace the turbocharger pressure sensor.

AFTER REPAIR	Deal with any other faults. Clear the fault memory. Switch off the ignition and carry out a road test followed by a test with the **diagnostic tool**.

GETtheMANUALS.org

DF199 **CONTINUED 1**	

CC.1	***NOTES***	**Special notes:** This fault appears when the turbocharging pressure is greater than the maximum value of the sensor.

Check the part number of the turbocharger pressure sensor in relation to the engine and the vehicle.
Check the turbocharger pressure sensor connections.
Check the engine management computer connections.
Repair if necessary.

Check **for insulation** from **+ 12 V** feed on the connection between:

Engine computer, **connector B track C1** → **track B or 3** turbocharging pressure sensor connector

Check **the continuity of the connection** between:

Engine computer, **connector C track A4** → **track A or 2** turbocharging pressure sensor connector

Tracks A, B and C of the turbocharging pressure sensor: F9Q 650, F9Q 750, F9Q 752, F9Q 754 engines.
Tracks 1, 2 and 3 of the turbocharger pressure sensor: F9Q 751, F9Q 680, F9Q 820, G9T 702, G9T 703, G9T 742 and G9T 743 engines.

If the fault is still present, refer to the interpretation of parameter **PR041 Turbocharging pressure**.
If **DF199** CC.1 is stored:
– Clear the fault.
– Carry out a road test at full throttle.
– If **DF199** CC.1 Present and then Stored: replace the turbocharging pressure sensor.
● **Check that the control rod of the turbocharger is not jammed:**
– **Apply test 6 for a turbocharger with fixed geometry.**
– **Apply test 7 for a turbocharger with variable geometry.**

AFTER REPAIR	Deal with any other faults. Clear the fault memory. Switch off the ignition and carry out a road test followed by a test with the **diagnostic tool**.

GETtheMANUALS.org

DF199 **CONTINUED 2**	

1.DEF	***NOTES***	**Priorities when dealing with a number of faults:** Firstly, apply the interpretation of the **DF216 Sensor supply voltage no. 1** fault, if it is present or stored.

Check the turbocharger pressure sensor connections.
Check the engine management computer connections.
Repair if necessary.

Check the **insulation, continuity and the absence of interference resistance** on the connections between:

Engine computer, **connector B track C1** → **track B or 3** turbocharging pressure sensor connector

Engine computer, **connector C track A4** → **track A or 2** turbocharging pressure sensor connector

Engine computer, **connector B track J2** → **track C or 1** turbocharging pressure sensor connector

Tracks A, B and C of the turbocharging pressure sensor: F9Q 650, F9Q 750, F9Q 752, F9Q 754, F9Q 760, F9Q 762, F9Q 772 and G9T 710 engines.
Tracks 1, 2 and 3 of the turbocharging pressure sensor: F9Q 751, F9Q 680, F9Q 820, G9T 702, G9T 703, G9T 742, G9T 743 and G9U 730 engines.
If the fault is still present, refer to the interpretation of parameter **PR041 Turbocharging pressure**.

AFTER REPAIR	Deal with any other faults. Clear the fault memory. Switch off the ignition and carry out a road test followed by a test with the **diagnostic tool**.

GETtheMANUALS.org

DF199 **CONTINUED 3**	

2.DEF	***NOTES***	**Priorities when dealing with a number of faults:** Firstly, apply the interpretation of the **DF200 Atmospheric pressure sensor** fault, if it is present.

Check the turbocharger pressure sensor connections.
Check the engine management computer connections.
Repair if necessary.

Check **the continuity and absence of interference resistance** on the connection between:

Engine computer, **connector B track C1** → **track B or 3** turbocharging pressure sensor connector

Carry out the required operations if the resistance is abnormally high.
Tracks A, B and C of the turbocharging pressure sensor: F9Q 650, F9Q 750, F9Q 752, F9Q 754 engines.
Tracks 1, 2 and 3 of the turbocharging pressure sensor: F9Q 751, F9Q 680, F9Q 820, G9T 702, G9T 703, G9T 742, G9T 743 and G9U 730 engines.
If the fault is still present:
Check the sensor mounting and the sealing ring on its seal or hoses (tightness of clip, etc.).
Check the inlet circuit sealing: apply **test 4**.
If the fault is still present, refer to the interpretation of parameter **PR041 Turbocharging pressure**.

AFTER REPAIR	Deal with any other faults. Clear the fault memory. Switch off the ignition and carry out a road test followed by a test with the **diagnostic tool**.

GETtheMANUALS.org

DF200 PRESENT	ATMOSPHERIC PRESSURE SENSOR 1.DEF: Feed voltage too low 2.DEF: Feed voltage too high

1.DEF ***2.DEF***	***NOTES***	**Priorities when dealing with a number of faults:** Apply the interpretation of fault **DF216 Sensor supply voltage no. 1** first if it is present or stored.

The atmospheric pressure sensor is inside the engine management computer, and no repairs are possible. **Simply check that the** engine management computer **air inlet is not blocked**.
If the fault is **present**, contact the Techline.

AFTER REPAIR	Deal with any other faults. Clear the fault memory. Switch off the ignition and carry out a road test followed by a test with the **diagnostic tool**.

GETtheMANUALS.org

DF207 PRESENT OR STORED	LOW PRESSURE PUMP RELAY CIRCUIT CC.1 : Short circuit to + 12 V CO.0 : Open circuit or short circuit to earth

NOTES	**Conditions for applying the fault finding procedure to stored faults:** If the fault is declared present after actuating the relay using command **AC034 Low pressure pump relay**.
	Special notes: Use bornier **Elé. 1681** for all operations on the connectors of the engine management computer.

CC.1	***NOTES***	None.

Check the fuel pump relay mounting connections.
Check the engine management computer connections.
Repair if necessary.

Remove the fuel pump relay and check it is correct:
– **Insulation** between **tracks 3 and 5** of the relay (rest position).
– Measure the resistance of the coil between **tracks 1 and 2**.
Replace the relay if the resistance is not: **90 Ω ± 5 at + 20˚C**.

Check **the condition** of the fuse: **FM3 (30 A) for F9Q 751, 752 and 754 engines**.
Check the **insulation** from **+ 12 V battery feed** and **12 V after relay** feed on the connections between:

Engine computer, **connector A track G1**	→	**track 50** of the fuel pump relay mounting (F9Q 751, 752 and 754)
12 V battery after fuse feed	→	**track 49** of the fuel pump relay mounting (F9Q 751, 752 and 754)
+ 12 V after relay	→	**track 52** of the fuel pump relay mounting (F9Q 751, 752 and 754)

If the fault is still present, change the **fuel pump relay**.

AFTER REPAIR	Deal with any other faults. Clear the fault memory. Switch off the ignition and carry out a road test followed by a test with the **diagnostic tool**.

GETtheMANUALS.org

DF207 **CONTINUED**	

CO.0	***NOTES***	None.

Check the fuel pump relay mounting connections.
Check the engine management computer connections.
Repair if necessary.

Measure the resistance of the fuel pump relay coil between **tracks 1 and 2**.
Replace the relay if the resistance is not: **90 Ω ± 5 at + 20˚C**.

Check the **continuity** and **insulation from earth** of the connections between:

Engine computer, **connector A track G1** → **track 50** of the fuel pump relay mounting (F9Q 751, 752 and 754)

Check **for + 12 V after relay** feed → **track 52** of the fuel pump relay mounting (F9Q 751, 752 and 754)

If the fault is still present, change the **fuel pump relay**.

AFTER REPAIR	Deal with any other faults. Clear the fault memory. Switch off the ignition and carry out a road test followed by a test with the **diagnostic tool**.

GETtheMANUALS.org

DF208 PRESENT OR STORED	FUEL PRESSURE SOLENOID VALVE CIRCUIT CC.1 : Short circuit to + 12 V CO.0 : Open circuit or short circuit to earth 1.DEF: Consistent after switching the ignition off

NOTES	**Conditions for applying the fault finding procedure to stored faults for CC.1 or CO.0:** The fault reappears after: – clearing the fault from the memory, – running of command **AC035 Fuel pressure solenoid valve**.
	Special notes: Use bornier **Elé. 1681** for all operations on the connectors of the engine management computer.

CC.1	***NOTES***	**IMPORTANT** – Please observe the cleanliness guidelines and safety advice.

Check the fuel pressure solenoid valve connections.
Check the engine management computer connections.
Repair if necessary.

Measure the **resistance** of the fuel pressure solenoid valve across **tracks 1 and 2**.
Replace the solenoid valve if this value is not:
- **3 Ω ± 0.5 at + 20˚C for CP3 high pressure pumps,**
- **2.5 Ω ± 0.5 at + 20˚C for CP1 high pressure pumps.**

With the fuel pressure solenoid valve connector disconnected, check the **insulation** to **+ 12 V** on the connection between:

Engine computer, **connector B track L1** ⟶ **track 2** fuel pressure solenoid valve connector

Check the **insulation** on this connection compared with that of the connection between:

Engine computer, **connector B track M2** ⟶ **track 1** fuel pressure solenoid valve connector

If the fault is still present, **replace the solenoid valve**.

AFTER REPAIR	Deal with any other faults. Clear the fault memory. Switch off the ignition and carry out a road test followed by a test with the **diagnostic tool**.

GETtheMANUALS.org

DF208 **CONTINUED 1**	

CO.0	***NOTES***	**IMPORTANT** – Please observe the cleanliness guidelines and safety advice.

Check the fuel pressure solenoid valve connections.
Check the engine management computer connections.
Repair if necessary.

Measure the resistance of the fuel pressure solenoid valve across **tracks 1 and 2**.
Replace the solenoid valve if this value is not:
- **3 Ω ± 0.5 at + 20˚C for CP3 high pressure pumps,**
- **2.5 Ω ± 0.5 at + 20˚C for CP1 high pressure pumps.**

Check **the continuity and insulation** to **earth** of the connection between:

Engine computer, **connector B track L1** ⟶ **track 2** fuel pressure solenoid valve connector

Check **for + 12 V after relay** feed on **track 1** of the fuel pressure solenoid valve.
If the fault is still present, **replace the solenoid valve**.

AFTER REPAIR	Deal with any other faults. Clear the fault memory. Switch off the ignition and carry out a road test followed by a test with the **diagnostic tool**.

GETtheMANUALS.org

DF208 **CONTINUED 2**	

1.DEF	***NOTES***	**Fault finding procedure application conditions:** If the fault reappears stored after: – the fault is cleared, – the power latch phase* has been completed several times, each preceded by an engine cycle: starting and accelerating > 2000 rpm. **Information on the setpoint:** Detection of this fault is performed during the power-latch* phase. Also, this detection follows a "counting strategy" and is therefore not performed each time the ignition is switched off. If it is detected during one power latch* phase, it will not necessarily be detected during the next power latch* phase. It is therefore necessary, after the fault is cleared, to perform several power latch* phases, each preceded by an engine running cycle (see the conditions above) to make it reappear. **Priorities when dealing with a number of faults:** Firstly, apply the interpretation of the **DF195 Engine speed/camshaft sensor consistency 2.DEF or 3.DEF** fault, if it is present. **IMPORTANT** – Please observe the cleanliness guidelines and safety advice.

* The immobiliser warning light will flash a few seconds after the ignition is switched off.

AFTER REPAIR	Deal with any other faults. Clear the fault memory. Switch off the ignition and carry out a road test followed by a test with the **diagnostic tool**.

GETtheMANUALS.org

DF208 **CONTINUED 3**	

On a vehicle fitted with a damper valve, check that this is working correctly using the interpretation of command **AC067 Damper valve**.

Check the fuel pressure solenoid valve connections.
Check the engine management computer connections.
Repair if necessary.

Measure **the resistance** of the fuel pressure solenoid valve across **tracks 1** and **2**.
Replace the solenoid valve if this value is not:
- **3 Ω ± 0.5 at + 20˚C for CP3 high pressure pumps,**
- **2.5 Ω ± 0.5 at + 20˚C for CP1 high pressure pumps.**

Check **the continuity and absence of interference resistance** on the connection between:

Engine computer, **connector B track L1** → **track 2** of the fuel pressure solenoid valve

Carry out the required operations if the resistance is abnormally high.

- Check **the continuity and absence of interference resistance** on **G9T - G9U engines**, on the connections between:

  Engine computer, **connector B track H3** → **track 2** engine speed sensor

  Engine computer, **connector B track G3** → **track 1** of the engine speed sensor

- Check **the continuity and absence of interference resistance** on **F9Q engines**, on the connections between:

  Engine computer, **connector B track H3** → **track B** of the engine speed sensor

  Engine computer, **connector B track G3** → **track A** of the engine speed sensor

Carry out the required operations if the resistance is abnormally high.
- Check earthing of the engine block.

If the fault is still present, refer to the interpretation of command **AC035 Fuel pressure solenoid valve**.

AFTER REPAIR	Deal with any other faults. Clear the fault memory. Switch off the ignition and carry out a road test followed by a test with the **diagnostic tool**.

GETtheMANUALS.org

DF209 PRESENT OR STORED	EGR VALVE POSITION SENSOR CIRCUIT CO.0 : Open circuit or short circuit to earth CC.1 : Short circuit to + 12 V 1.DEF: Sensor supply fault 2.DEF: Offset too high: valve clogged, stuck open or abnormal 3.DEF: Valve jammed open 4.DEF: Valve damaged

NOTES	**Conditions for applying the fault finding procedure to stored faults:** The fault reappears after: – the fault memory has been cleared, – the valve has been actuated by the **AC036 EGR valve** command.
	Special notes: Use bornier **Elé. 1681** for all operations on the connectors of the engine management computer.

CO.0	***NOTES***	**Priorities when dealing with a number of faults:** In the event of the simultaneous presence of the **DF325 Exhaust gas recirculation function, CO.0** fault, check that the exhaust gas recirculation valve connector is connected correctly.

Check the exhaust gas recirculation valve connections:
Check the engine management computer connections.
Repair if necessary.

Check **the continuity and insulation** to earth of the connection between:

Engine computer, **connector B track C2** → **track 6** of the exhaust gas recirculation valve connector

Check **the continuity of the connection** between:

Engine computer, **connector B track F2** → **track 2** of the exhaust gas recirculation valve connector

Also check for **+ 5 V** on **track 2** of the exhaust gas recirculation valve connector.

If the fault is still present, replace the exhaust gas recirculation valve (see **Replacement of components**).

AFTER REPAIR	Deal with any other faults. Clear the fault memory. Switch off the ignition and carry out a road test followed by a test with the **diagnostic tool**.

GETtheMANUALS.org

DF209 **CONTINUED 1**	

CC.1	***NOTES***	None.

Check the exhaust gas recirculation valve connections:
Check the engine management computer connections.
Repair if necessary.

Check **for insulation** to **+ 12 V** feed on the connection between:

Engine computer, **connector B track C2** → **track 6** of the exhaust gas recirculation valve connector

Check **the continuity and absence of interference resistance** on the connection between:

Engine computer, **connector B track B2** → **track 4** of the exhaust gas recirculation valve connector

Also check for the computer earth on **track 4** of the exhaust gas recirculation valve connector.
If the fault is still present, replace the exhaust gas recirculation valve (see **Replacement of components**).

AFTER REPAIR	Deal with any other faults. Clear the fault memory. Switch off the ignition and carry out a road test followed by a test with the **diagnostic tool**.

GETtheMANUALS.org

DF209 **CONTINUED 2**	

1.DEF	***NOTES***	**Priorities when dealing with a number of faults:** Firstly, apply the interpretation of the **DF216 Sensor supply voltage no. 1** fault, if it is present or stored.

Check the exhaust gas recirculation valve connections:
Check the engine management computer connections.
Repair if necessary.

With the connectors disconnected:
Check the **continuity and for the absence of interference resistance** on the following connections:

Engine computer, **connector B track F2** → **track 2** of the exhaust gas recirculation valve connector

Engine computer, **connector B track B2** → **track 4** of the exhaust gas recirculation valve connector

Engine computer, **connector B track C2** → **track 6** of the exhaust gas recirculation valve connector

Also check that they are **insulated** against **+ 12 V**.
If the fault is still present, check for:

+ 5 V on **track 2** of the exhaust gas recirculation valve connector.
Computer earth on **track 4** of the exhaust gas recirculation valve connector.

– If the supply is not correct, make the necessary repairs (harness, connectors, etc.).
– If the feed and the connections are correct, replace the exhaust gas recirculation valve (see **Replacement of components**).

AFTER REPAIR	Deal with any other faults. Clear the fault memory. Switch off the ignition and carry out a road test followed by a test with the **diagnostic tool**.

GETtheMANUALS.org

DF209 **CONTINUED 3**	

2.DEF ***3.DEF*** ***4.DEF***	***NOTES***	None.

– Check the exhaust gas recirculation valve connections
(exhaust gas recirculation valve side).
– Check the engine management computer connections (computer side).
(no conducting particles or bent pins).
– Check for insulation **to + 5 V and + 12 V** on the following connection:

Engine management computer, **connector B track C2** → **track 6** of the exhaust gas recirculation valve connector

– Check the conformity of the power supply of the exhaust gas recirculation valve position sensor:
+ 5 V on **track 2** of the exhaust gas recirculation valve connector.
computer earth on **track 4** of the exhaust gas recirculation valve connector.
Carry out the necessary repairs.

● If this fault **is combined with engine faults** such as poor performance and/or fumes:
Apply **test 9**, part A.

● If this fault **is not combined with engine problems** such as poor performance and/or fumes:
– Run the **RZ002 EGR adaptives** command
– When the command has finished, switch off the ignition and wait until the end of the power latch*,
– Switch on the ignition again and then reinitialise dialogue using the diagnostic tool.
– Clear **DF209**.
– Start the engine.
– After a delay of **50 seconds**, accelerate **gently to 2500 rpm**, for **~ 5 seconds** then return to idle speed.
– Repeat this procedure **5** times.
– If the fault does not recur, end the fault finding procedure.
– If the fault recurs, replace the exhaust gas recirculation valve (see **Replacement of components**).

* Engine immobiliser indicator light flashes a few seconds after the ignition is switched off.

AFTER REPAIR	Deal with any other faults. Clear the fault memory. Switch off the ignition and carry out a road test followed by a test with the **diagnostic tool**.

GETtheMANUALS.org

DF210 PRESENT OR STORED	AFTER IGNITION KEY SIGNAL 1.DEF: Internal fault on channel after ignition

NOTES	**Priorities when dealing with a number of faults:** Firstly, apply the interpretation of the **DF222 Main relay** fault, if it is present or stored.

If the fault is **stored** or **present**, clear the fault from the computer memory.
Switch off the ignition, wait for the end of the power latch*, then switch on the ignition again. Start the engine and re-establish dialogue.
If the fault recurs, contact the Techline.

***** The immobiliser warning light will flash a few seconds after the ignition is switched off.

AFTER REPAIR	Deal with any other faults. Clear the fault memory. Switch off the ignition and carry out a road test followed by a test with the **diagnostic tool**.

GETtheMANUALS.org

DF213 STORED	FLYWHEEL SIGNAL INFORMATION INCONSISTENCY 1.DEF: Overspeed detected

NOTES	**Conditions for applying the fault finding procedure to stored faults:** The fault reappears after: – clearing the fault from the memory, – the engine is started, – engine speed exceeding **~ 3500 rpm**.
	Special notes: This fault appears if the computer detects that the engine speed has exceeded the maximum. This could be linked to an incorrect manoeuvre, for example: abrupt downshifting from 5th to 2nd gear. Use bornier **Elé. 1681** for all operations on the connectors of the engine management computer.

Measure **the resistance** of the engine speed sensor between **tracks A and B on F9Q engines**.
Replace the sensor if its resistance is not: **800 Ω ± 80 at 20˚C.**
Measure the **resistance** of the engine speed sensor between **tracks 1 and 2 on G9T/G9U engines**.
Replace the sensor if its resistance is not: **235 Ω ± 35 at 23˚C.**

Check the conformity of the charging circuit (correct charging voltage and no interference).
Check that the engine and computer earths are correct (tightness, oxidation, etc.).
Check the **insulation** against the **+ 12 V** feed and **the earth** of the following connections **on F9Q engines**:

Engine computer, **connector B track G3** → **track A** of the engine speed sensor

Engine computer, **connector B track H3** → **track B** of the engine speed sensor

Check the **insulation** from **+ 12 V** feed and from **earth** of the following connections **on G9T/G9U engines**:

Engine computer, **connector B track G3** → **track** 1 of the engine speed sensor

Engine computer, **connector B track H3** → **track 2** of the engine speed sensor

If the fault is still present, replace the engine speed sensor.

AFTER REPAIR	Deal with any other faults. Clear the fault memory. Switch off the ignition and carry out a road test followed by a test with the **diagnostic tool**.

GETtheMANUALS.org

DF215 PRESENT OR STORED	ANALOGUE TO DIGITAL CONVERTER 1.DEF: Analogue/digital converter fault

NOTES	None.

If the fault is **stored** or **present**, clear the fault from the computer memory.
Switch off the ignition, wait for the end of the power latch*, then switch the ignition back on. Start the engine and re-establish dialogue.
If the fault recurs, contact the Techline.

AFTER REPAIR	Deal with any other faults. Clear the fault memory. Switch off the ignition and carry out a road test followed by a test with the **diagnostic tool**.

GETtheMANUALS.org

DF216 PRESENT OR STORED	SENSOR FEED VOLTAGE No. 1 1.DEF: Sensor supply voltage 1 too low 2.DEF: Sensor feed voltage 1 too high

NOTES	**Conditions for applying the fault finding procedure to stored faults:** The fault reappears after: – clearing the fault from the memory, – a delay of **1 minute** with the engine running.
	Special notes: – Use bornier **Elé. 1681** for all operations on the connectors of the engine management computer. – Use the **Wiring diagrams** Technical Note for the vehicle.

1.DEF	***NOTES***	None.

Note:
Feed no. 1 is for the following components:
– pedal sensor (gang 1),
– fuel pressure sensor,
– air flowmeter,
– exhaust gas recirculation valve,
– turbocharger pressure sensor (if fitted).

Display parameter **PR215 Sensor supply voltage no. 1**.
– If this voltage is below **4.9 V**, disconnect the connectors on all sensors referred to above one by one.
If, following disconnection, the voltage becomes normal again, replace the sensor concerned or repair the connection (wait a few seconds **between each disconnection** for the computer to make its measurement).
Clear the faults created by the multiple disconnections.
If, with all the sensors disconnected, the voltage is still **less than + 4.9 V**:
– check the insulation against earth of the **+5 V line** of each of these sensors.
– Also check the insulation between:
  – tracks **2 and 4** of the pedal sensor connector,
  – tracks **1 and 3** of the fuel pressure sensor connector,
  – tracks **2 and 3** of the air flow sensor connector.
  – tracks **2 and 4** of the exhaust gas recirculation valve connector,
  – tracks **1** and **2** or **A** and **C** of the turbocharger pressure sensor connector (depending on the engine).
Carry out the necessary repairs.
If the fault is still present, carefully examine the engine management computer connections (for conductive particles, bent pins).
If the problem is still present, contact the Techline.

AFTER REPAIR	Deal with any other faults. Clear the fault memory. Switch off the ignition and carry out a road test followed by a test with the **diagnostic tool**.

GETtheMANUALS.org

DF216 **CONTINUED**	

2.DEF	***NOTES***	None.

Note:
Feed no. 1 is for the following components:
– pedal sensor (gang 1),
– fuel pressure sensor,
– air flowmeter,
– exhaust gas recirculation valve,
– turbocharger pressure sensor (if fitted).

Display parameter **PR215 Sensor supply voltage no. 1**.
– If the voltage is above **5.1 V**, disconnect all the sensor connectors referred to above one by one.
If, following disconnection, the voltage becomes normal again, replace the sensor concerned or repair the connection (wait a few seconds **between each disconnection** for the computer to make its measurement).
Clear the faults created by the multiple disconnections.
If, with these sensors disconnected, the voltage is still greater than **+ 5.1 V**:
– Check the insulation to **+ 12 V** of the following connections:

Engine computer, **connector A track E1**	→	**track 4** of the pedal sensor connector
Engine computer, **connector B track H2**	→	**track 3** of the fuel pressure sensor connector
Engine computer, **connector B track G2**	→	**track 3** of the air flow sensor connector
Engine computer, **connector B track F2**	→	**track 2** of the exhaust gas recirculation valve connector
Engine computer, **connector B track J2**	→	**track 1 or C** of the turbocharger pressure sensor connector

Carry out the necessary repairs.
If the fault is still present, carefully examine the engine management computer connections (for conductive particles, bent pins).
If the problem is still present, contact the Techline.

AFTER REPAIR	Deal with any other faults. Clear the fault memory. Switch off the ignition and carry out a road test followed by a test with the **diagnostic tool**.

GETtheMANUALS.org

DF217 PRESENT OR STORED	SENSOR FEED VOLTAGE No. 2 1.DEF: Sensor feed voltage no. 2 too low 2.DEF: Sensor feed voltage 2 too high

NOTES	**Conditions for applying the fault finding procedure to stored faults:** The fault reappears after: – clearing the fault from the memory, – a delay of **1 minute** with the engine running.
	Special notes: Use bornier **Elé. 1681** for all operations on the connectors of the engine management computer. Refer to the **Wiring diagrams** Technical Note for the vehicle.

1.DEF	***NOTES***	None.

Note:
Supply no. 2 is for the following component:
– pedal sensor.

Display parameter **PR216 Sensor supply voltage no. 2**:
– If the voltage is below **+ 4.9 V**, disconnect the connectors on all the sensors referred to above one by one.
If, following disconnection, the voltage becomes normal again, replace the sensor concerned or repair the connection (wait a few seconds **between each disconnection** for the computer to make its measurement).
Clear the faults created by the multiple disconnections.
If, with these sensors disconnected, the voltage is still **below + 4.9 V**:
– check the insulation against earth of the **+5 V line** of each of these sensors.
– Also check the insulation between:
tracks **1** and **5** of the pedal sensor connector.
Carry out the necessary repairs.
If the fault is still present, carefully examine the engine management computer connections (for conductive particles, bent pins).
If the problem is still present, contact the Techline.

AFTER REPAIR	Deal with any other faults. Clear the fault memory. Switch off the ignition and carry out a road test followed by a test with the **diagnostic tool**.

GETtheMANUALS.org

DF217 **CONTINUED**	

2.DEF	***NOTES***	None.

Note:
Supply no. 2 is for the following component:
– pedal sensor.

Display parameter **PR216 Sensor supply voltage no. 2**:
– If the voltage is above **5.1 V**, disconnect all the sensor connectors referred to above one by one.
If, following disconnection, the voltage becomes normal again, replace the sensor concerned or repair the connection (wait a few seconds **between each disconnection** for the computer to make its measurement).
Clear the faults created by the multiple disconnections.
If, with these sensors disconnected, the voltage is still **greater** than **+ 5.1 V**:
– Check the insulation to **+ 12 V** of the following connections:

Engine computer, **connector A track H2** ⟶ **track 5** of the pedal sensor connector

Carry out the necessary repairs.
If the fault is still present, carefully examine the engine management computer connections (for conductive particles, bent pins).
If the problem is still present, contact the Techline.

AFTER REPAIR	Deal with any other faults. Clear the fault memory. Switch off the ignition and carry out a road test followed by a test with the **diagnostic tool**.

GETtheMANUALS.org

DF218 PRESENT OR STORED	MICROCONTROLLER 1.DEF: Fault in the microcontroller 2.DEF: Inconsistent data

NOTES	**Priorities when dealing with a number of faults:** Apply the interpretation of fault **DF222 Main relay** first if it is present or stored.

If the fault is **stored** or **present**, clear the fault from the computer memory.
Switch off the ignition, wait for the end of the power latch*, then switch the ignition back on. Start the engine and re-establish dialogue.
If the fault recurs, contact the Techline.

***** The immobiliser warning light will flash a few seconds after the ignition is switched off.

AFTER REPAIR	Deal with any other faults. Clear the fault memory. Switch off the ignition and carry out a road test followed by a test with the **diagnostic tool**.

GETtheMANUALS.org

DF222 STORED	MAIN RELAY 1.DEF: Relay cut off too soon 2.DEF: Relay cut off too late

NOTES	**Fault finding procedure application conditions:** The fault reappears after: – the fault memory has been cleared, – the engine is started, – the ignition is switched off with loss of dialogue, – switching on the ignition, – establishing dialogue.
	Special notes: Use bornier **Elé. 1681** for all operations on the connectors of the engine management computer. Refer to the **Wiring diagrams** Technical Note for the vehicle to locate the connections and relays concerned.

1.DEF	***NOTES***	None.

Check the connections of the injection supply relay mounting.
Check the engine management computer connections.
Repair if necessary.

Check the tightness and the condition of the **+** and **-** battery terminals.

For F9Q 650, 680, 750, 751, 752, 754, 820, G9T 702, 703, 742 and 743 engines:
Check the **continuity** of the following connections:

Injection supply relay **track 13** → **tracks M2** and **M3, connector B** of the engine management computer

Injection supply relay **track 15** → **track D4, connector B** of the engine management computer

Check the conformity of the fuses concerned (crimping and condition of the wires on the terminals):
– For F9Q 650, 680, 750, 751, 752, 754, 820, G9T 702, 703, 742 and 743 engines: **FM3 (30 A)**.
Check the conformity of the impact sensor: incorrect contact (depending on equipment).
Check the conformity of the engine management computer earths:

Earth → **track L3, L4, M4, connector B** of the engine management computer

If the fault is still present, replace the injection feed relay.

AFTER REPAIR	Deal with any other faults. Clear the fault memory. Switch off the ignition and carry out a road test followed by a test with the **diagnostic tool**.

GETtheMANUALS.org

DF222 **CONTINUED 1**	

2.DEF	***NOTES***	None.

Check the main relay connections. Check the engine management computer connections. Repair if necessary.
Check the conformity of the main relay (relay removed): – Contact insulation between **tracks 13** and **16**. – Resistance of the coil between **tracks 14** and **15**. Replace the relay if its resistance is not: **60 Ω ± 5 at + 20˚C**.
For F9Q 650, 680, 750, 751, 752, 754, 820, G9T 702, 703, 742 and 743 engines: Check the **insulation** to **earth** of the following connection: Injection supply relay **track 15** ⟶ **track D4, connector B** of the engine management computer
If the fault is still present, replace the injection feed relay.

AFTER REPAIR	Deal with any other faults. Clear the fault memory. Switch off the ignition and carry out a road test followed by a test with the **diagnostic tool**.

GETtheMANUALS.org

DF225 PRESENT OR STORED	STABILISED VOLTAGE REGULATOR 1.DEF: Fault in the stabilised voltage regulator 2.DEF: Fault in the stabilised voltage regulator

NOTES	None.

If the fault is **stored** or **present**, clear the fault from the computer memory.
Switch off the ignition, wait for the end of the power latch*, then switch on the ignition again. Start the engine and re-establish dialogue.
If the fault recurs, contact the Techline.

AFTER REPAIR	Deal with any other faults. Clear the fault memory. Switch off the ignition and carry out a road test followed by a test with the **diagnostic tool**.

GETtheMANUALS.org

DF226 PRESENT OR STORED	DAMPER VALVE CIRCUIT CC.1 : Short circuit to + 12 V CO.0 : Open circuit or short circuit to earth

NOTES	**Conditions for applying the fault finding procedure to stored faults:** If the fault becomes present after an **AC067 Damper valve** actuator command.
	Special notes: Use bornier **Elé. 1681** for all operations on the connectors of the engine management computer.

CC.1	***NOTES***	None.

Check the connections of the damper valve solenoid valve.
Check the engine management computer connections.
Repair if necessary.

Measure **the resistance** of the coil in the damper valve solenoid valve across **tracks 1** and **2**.
Replace the solenoid valve if the resistance is not: **46 Ω ± 3 at + 25˚C**.

Check **for insulation** from **+ 12 V** feed on the connection between:

Engine management computer, **connector C track F4** ⟶ **track 1** of the solenoid valve connector

If the fault is still present, replace the damper valve solenoid valve.

CO.0	***NOTES***	None.

Check the connections of the damper valve solenoid valve.
Check the engine management computer connections.
Repair if necessary.

Measure **the resistance** of the coil in the damper valve solenoid valve across **tracks 1** and **2**.
Replace the solenoid valve if the resistance is not: **46 Ω ± 3 at + 25˚C**.

Check **the continuity and insulation** to earth of the connection between:

Engine management computer, **connector C track F4** ⟶ **track 1** of the solenoid valve connector

Check **for + 12 Volts** on **track 2** of the connector on the damper valve solenoid valve.
If the fault is still present, replace the damper valve solenoid valve.

AFTER REPAIR	Deal with any other faults. Clear the fault memory. Switch off the ignition and carry out a road test followed by a test with the **diagnostic tool**.

GETtheMANUALS.org

DF227 PRESENT OR STORED	SWIRL FLAP CC.1 : Short circuit to + 12 V CO.0 : Open circuit or short circuit to earth 1.DEF: Jammed valve or jammed control solenoid valve

NOTES	**Conditions for applying the fault finding procedure to stored CC.1 or CO.O:** If the fault becomes present after running actuator command **AC013 Swirl flap**.
	Special notes: Use bornier **Elé. 1681** for all operations on the connectors of the engine management computer.

CC.1	***NOTES***	None.

Check the swirl solenoid valve connections.
Check the engine management computer connections.
Repair if necessary.

Measure the **resistance** of the swirl flap solenoid valve across **tracks 1** and **2**.
Replace the solenoid valve if its resistance is not approximately: **46 Ω ± 3 at + 25˚C**.

Check **for insulation** from **+ 12 V** feed on the connection between:

Engine management computer **connector C track H4** ⟶ **track 1** of the solenoid valve connector

If the fault is still present, replace the swirl flap solenoid valve.

CO.0	***NOTES***	None.

Check the swirl solenoid valve connections.
Check the engine management computer connections.
Repair if necessary.

Measure the **resistance** of the swirl flap solenoid valve across **tracks 1** and **2**.
Replace the solenoid valve if the resistance is not: **46 Ω ± 3 at + 25˚C**.

Check **the continuity and insulation** to **earth** of the connection between:

Engine management computer, **connector C track H4** ⟶ **track 1** of the solenoid valve connector

Check **for** the **+ 12 V feed** on **track 2** of the swirl flap solenoid valve connector.
If the fault is still present, replace the swirl flap solenoid valve.

AFTER REPAIR	Deal with any other faults. Clear the fault memory. Switch off the ignition and carry out a road test followed by a test with the **diagnostic tool**.

GETtheMANUALS.org

DF227 **CONTINUED**	

1.DEF	***NOTES***	**Priorities when dealing with a number of faults:** Use the interpretation of fault **DF056 Air flow sensor circuit** or **DF325 Exhaust gas recirculation function** or **DF301 Air inlet circuit** first if any one of the three is present or stored.
		Conditions for applying the fault finding procedure to 1.DEF stored: The fault reappears after: – the fault memory has been cleared, – a road test with engine speed **>3500 rpm**, fuel flow > **59 mm^3/stroke** and atmospheric pressure **> 996 hPa (996 mbar)** (minimum of **4 seconds** under these conditions to clear the fault).
		Special notes: Use bornier **Elé. 1681** for all operations on the connectors of the engine management computer.

Check the swirl solenoid valve connections.
Check the engine management computer connections.
Repair if necessary.

Measure the **resistance** of the swirl flap solenoid valve across **tracks 1** and **2**.
Replace the solenoid valve if the resistance is not: **46 Ω ± 3 at + 25˚C**.

Check **the continuity and absence of interference resistance** on the connection between:

Engine management computer **connector C track H4** ⟶ **track 1** turbulence flap solenoid valve connector

If these checks do not reveal any faults, refer to the interpretation of command **AC013 Swirl flap**.

AFTER REPAIR	Deal with any other faults. Clear the fault memory. Switch off the ignition and carry out a road test followed by a test with the **diagnostic tool**.

GETtheMANUALS.org

DF228 PRESENT OR STORED	BRAKE SIGNALS 1.DEF: Consistency with redundant brakes

1.DEF	***NOTES***	**Conditions for applying the fault finding procedure to stored faults:** If the fault is declared present after the brake pedal has been depressed.
		Special notes: Use bornier **Elé. 1681** for all operations on the connectors of the engine management computer.

AFTER REPAIR	Deal with any other faults. Clear the fault memory. Switch off the ignition and carry out a road test followed by a test with the **diagnostic tool**.

GETtheMANUALS.org

DF228

CONTINUED 1

From the List of statuses menu, check **ET122** and **ET120** and check:

– brake pedal in rest position	**ET122**= **ABSENT**	and	**ET123**= **ABSENT**
– brake pedal depressed	**ET122** = **PRESENT**	and	**ET123** = **PRESENT**

*Has **ET122** been correctly recognised?*

NO

YES

*Has **ET123** been correctly recognised?* — **YES** → **Clear the fault End of fault finding procedure**

NO

Check the connections of the brake pedal switch, the ABS computer, the electronic stability program computer and the engine management computer.
Repair if necessary.
Check **for + 12 V** after ignition feed on **track 2 and 4** of the brake pedal switch connector and the condition of the fuses (F28 (20 A) and F21 (10 A)).
Disconnect the ABS/ESP (electronic stability program) computer and check the **continuity and insulation** from **+ 12 V** and from earth of the following connections:

Brake pedal switch connector **track 1** → **track 41** ABS/ESP computer connector

electronic stability program and ABS computer connector
Check that the brake pedal switch is working correctly:
– in rest position: infinite resistance between tracks **1 and 2**; depressed: continuity between tracks **1 and 2**.
Replace the switch if necessary.
If the fault is still present, run fault finding on the **Anti-lock Braking System - electronic stability program;** if no irregularity is detected, then run **multiplexed network fault finding**.

A

AFTER REPAIR	Deal with any other faults. Clear the fault memory. Switch off the ignition and carry out a road test followed by a test with the **diagnostic tool**.

GETtheMANUALS.org

DF228 **CONTINUED 2**	

Check the brake pedal switch connections and the engine management computer connections. Repair if necessary.
Check the condition and adjustment of the brake pedal switch. Repair if necessary.
Check **for + 12 V** after ignition feed on **track 2 and 4** of the brake pedal switch connector and the condition of the fuses (F28 (20 A) and F21 (10 A)).
Disconnect the ABS/ESP (electronic stability program) computer and check the **continuity and insulation** from **+ 12 V** and from earth of the following connection:

Engine management computer, **connector A track F3** → **track 3** brake pedal switch connector

Check that the brake pedal switch is working correctly:
– in rest position: infinite resistance between tracks **1 and 2** ; depressed: continuity between tracks **1 and 2**.
Replace the switch if necessary.

AFTER REPAIR	Deal with any other faults. Clear the fault memory. Switch off the ignition and carry out a road test followed by a test with the **diagnostic tool**.

GETtheMANUALS.org

DF234 PRESENT OR STORED	CRUISE CONTROL/SPEED LIMITER 1.DEF: Cruise control switch voltage 2.DEF: Plausibility of deceleration 3.DEF: Plausibility of cruise control/speed limiter switch

1.DEF	***NOTES***	All operations on the connections beneath the steering wheel centre cover require the **air bag computer to be locked**.
		Special notes: see the **Wiring diagrams** Technical Note for your vehicle to locate the connections and connectors concerned.
		Conditions for applying the fault finding procedure to stored faults: If the fault recurs as present after: – the steering wheel controls being pressed.

Display **PR178 Cruise control switch voltage**. With no pressure on the steering wheel switches, the voltage shown should be: **4.9 V ± 0.2**.

If the voltage is not in this region, disconnect the steering wheel switch (black union **2 tracks** beneath the steering wheel centre cover) and display **PR178** again.
If the voltage changes to **4.9 V ± 0.2**, go to stage 1.
If the voltage does not change, check the engine management computer connections.
Repair if necessary. If the fault is still present, go to step **a**.

1 - Check the conformity of the steering wheel switches as follows: disconnect the black connector **2 tracks** under the central cover of the steering wheel (ohmmeter connected on the steering wheel switch side). The measure should indicate:

- **900 Ω (± 10 Ω)** when the **Resume** button is pressed.

(or the one-touch switch **R** on the right-hand side of the steering wheel)

- **0 Ω (0.8 Ω max)** when the **Suspend** button is pressed.

(or the one-touch switch **O** on the right-hand side of the steering wheel)

- **300 Ω (± 10 Ω)** when the **Set +** button is pressed.

(or the one-touch switch on the left of the steering wheel)

- **100 Ω (± 10 Ω)** when the **Set -** button is pressed.

(or the one-touch switch on the left of the steering wheel)

- **Infinite resistance** in rest position.

– **If the values are not correct**, replace the steering wheel switches.
– **If the values are correct**, make the same measurements from **connector A** of the engine management computer by connecting the ohmmeter between **tracks A2** and **B2 (steering wheel switch connected)**.

a - If the fault is still present, check the connection between the engine management computer and the connector under the steering wheel, using the relevant wiring diagram (line resistance, open circuit, short circuit, etc.). Carry out the necessary repairs.

b - If the values are correct, clear the fault, switch off the ignition, wait until the end of the power latch* phase and switch on the ignition again.

If the fault reappears (after pressing the steering wheel controls), contact the Techline.

* The immobiliser warning light will flash a few seconds after switching the ignition off.

AFTER REPAIR	Deal with any other faults. Clear the fault memory. Switch off the ignition and carry out a road test followed by a test with the **diagnostic tool**.

GETtheMANUALS.org

DF234 **CONTINUED 1**	

2.DEF	***NOTES***	**Priorities when dealing with a number of faults:** Deal with faults **DF196 Pedal sensor circuit gang 1 or DF198 Pedal sensor circuit gang 2** first if one of the two is present.

Check the conformity of the accelerator pedal sensor:
- **PR030 Accelerator pedal position,**
- **PR147 Pedal potentiometer voltage gang 1**
- **PR148 Pedal potentiometer voltage gang 2**
- **PR217 Pedal load (gang 1)**
- **PR218 Pedal load (gang 2)**

Check the engine management computer connections.
Repair if necessary.
Perform fault finding on the ABS system/electronic stability program.

AFTER REPAIR	Deal with any other faults. Clear the fault memory. Switch off the ignition and carry out a road test followed by a test with the **diagnostic tool**.

GETtheMANUALS.org

DF234 **CONTINUED 2**	

3.DEF	***NOTES***	None.

Check the connections of the on/off switch of the speed limiter/cruise control.
Check the engine management computer connections.
Repair if necessary.

Check the operation of the on/off switch of the speed limiter/cruise control using an ohmmeter:

Switch in rest position:
Insulation between tracks **A2 and A3**
Insulation between tracks **A2 and B1**

Switch on cruise-control position:
Insulation between tracks **A2 and B1**
Continuity across tracks **A2 and A3**

Switch on Speed limiter position:
Insulation between tracks **A2 and A3**
Continuity across tracks **A2 and B1**

If the on/off switch is incorrect, replace the switch.
If the on/off switch is correct, check **the continuity and the absence of interference resistance** on the following connections:

Engine computer **connector A track F2** → **track B1** of the cruise control/speed limiter on/off switch connector.

Engine computer **connector A track D2** → **track A3** of the cruise control/speed limiter on/off switch connector.

Also check the **insulation** between these two connections, as well as their insulation against the **+ 12 V** feed.
Carry out the necessary repairs.

AFTER REPAIR	Deal with any other faults. Clear the fault memory. Switch off the ignition and carry out a road test followed by a test with the **diagnostic tool**.

GETtheMANUALS.org

DF238 PRESENT OR STORED	THERMOPLUNGER No. 3 RELAY CIRCUIT CC.1 : Short circuit to + 12 V CO.0 : Open circuit or short circuit to earth

NOTES	**Conditions for applying the fault finding procedure to stored faults:** If the fault becomes present following activation of the relay using command **AC031 Thermoplunger no. 3 relay.**
	Special notes: Use bornier **Elé. 1681** for all operations on the connectors of the engine management computer.

CC.1	***NOTES***	None.

Check the connections of the thermoplunger no. **3** relay mounting on the engine fuse box.
Check the engine management computer connections.
Repair if necessary.

Check the conformity of the thermoplunger no. **3** relay (relay removed):
– **Insulation** between **tracks 34 and 33**.
– Measure the resistance of the relay coil between **tracks 37 and 35**.
Replace the relay if its resistance is not: **90 Ω ± 5 at + 20˚C**.

Check **for insulation** from **+ 12 V** feed on the connection between:

Engine computer, connector **C track E4** → **track 35** of the thermoplunger no.**3** relay mounting

Also check that this connection is **insulated** against the following connections:

thermoplunger no. **3** relay mounting **track 37** → **+ 12 V after relay**

thermoplunger no. **3** relay mounting **track 34** → **+ 12 V batteryafter fuse feed**

AFTER REPAIR	Deal with any other faults. Clear the fault memory. Switch off the ignition and carry out a road test followed by a test with the **diagnostic tool**.

GETtheMANUALS.org

DF238 **CONTINUED 1**	

CO.0	***NOTES***	None.

Check the connections of the thermoplunger no. **3** relay mounting on the engine fuse box.
Check the engine management computer connections.
Repair if necessary.

Measure the **resistance** of the thermoplunger no. **3** relay coil between **tracks 37 and 35**.
Replace the relay if its resistance is not: **90 Ω ± 5 at + 20˚C**.

Check **the continuity and insulation** to **earth** of the connection between:

Engine computer, connector **C track E4** ⟶ **track 35** of the thermoplunger no.**3** relay mounting

Check **for** the **+ 12 V after relay** feed on **track 37** of the thermoplunger no. **3** relay mounting.

AFTER REPAIR	Deal with any other faults. Clear the fault memory. Switch off the ignition and carry out a road test followed by a test with the **diagnostic tool**.

GETtheMANUALS.org

DF239 PRESENT OR STORED	THERMOPLUNGER NO. 2 RELAY CIRCUIT CC.1 : Short circuit to + 12 V CO.0 : Open circuit or short circuit to earth

NOTES	**Conditions for applying the fault finding procedure to stored faults:** If the fault becomes present following an actuator command **AC064 Thermoplunger no. 2 relay**.
	Special notes: Use bornier **Elé. 1681** for all operations on the connectors of the engine management computer. The thermoplunger no. 2 relay supplies two thermoplungers in parallel. Refer to the **Wiring diagrams** Technical Note for the vehicle to locate the fuses and relays concerned.

CC.1	***NOTES***	None.

Check the thermoplunger no. **2** relay connections.
Check the engine management computer connections.
Repair if necessary.

Check the conformity of the thermoplunger no. **2** relay (relay removed):
– Insulation between **tracks 3 and 5**.
– Measure the resistance of the relay coil between **tracks 1 and 2**.
Replace the relay if its resistance is not: **90 Ω ± 5 at + 20˚C**.

For G9T 702 and 703 engines (Vel Satis):
Check **the insulation** against **+ 12 V** of the connection between:

Engine computer, connector **B track F3** → **track 3** thermoplunger no. **2** relay mounting

Also check that this connection is **insulated** against the following connections:

Thermoplunger no. **2** relay mounting, **track 2** → **+ 12 V after relay**

Thermoplunger no. **2** relay mounting, **track 1** → **+ 12 V battery after fuse feed**

For F9Q 650, 750, 751, 752, 754, G9T 702 and 703 engines (Laguna II):
Check **the insulation** against **+ 12 V** of the connection between:

Engine management computer, connector **B track G3** → **track 3** thermoplunger no. **2** relay mounting

Also check that this connection is **insulated** against the following connections:

Thermoplunger no. **2** relay mounting, **track 2** → **+ 12 V after relay**

Thermoplunger no. 2 relay mounting, track 1 → + 12 V battery after fuse feed

AFTER REPAIR	Deal with any other faults. Clear the fault memory. Switch off the ignition and carry out a road test followed by a test with the **diagnostic tool**.

GETtheMANUALS.org

DF239 **CONTINUED**	

CO.0	***NOTES***	None.

Check the thermoplunger no. **2** relay connections. Check the engine management computer connections. Repair if necessary.
Measure **the resistance** of the thermoplunger no. **2** relay coil between **tracks 1 and 2**. Replace the relay if its resistance is not: **90 Ω ± 5 at + 20˚C**.
For G9T 702 and 703 engines (Vel Satis): Check **the continuity and insulation** to **earth** of the connection between: Engine computer, connector **B track F3** ⟶ **track 3** thermoplunger no. **2** relay mounting
For F9Q 650, 750, 751, 752, 754, G9T 702 and 703 engines (Laguna II): Check **the continuity and insulation** to **earth** of the connection between: Engine management computer, connector **B track G3** ⟶ **track 3** thermoplunger no. **2** relay mounting
Check for **+ 12 V after relay** feed on **track 1** (or other track depending on the engine; check CC.1 on the other tracks) of the thermoplunger no. **2** relay mounting.

AFTER REPAIR	Deal with any other faults. Clear the fault memory. Switch off the ignition and carry out a road test followed by a test with the **diagnostic tool**.

GETtheMANUALS.org

DF240 PRESENT OR STORED	THERMOPLUNGER NO. 1 RELAY CIRCUIT CC.1 : Short circuit to + 12 V CO.0 : Open circuit or short circuit to earth

NOTES	**Conditions for applying the fault finding procedure to stored faults:** If the fault recurs as present after: – actuator command **AC063 Thermoplunger no. 1 relay**.
	Special notes: Use bornier **Elé. 1681** for all operations on the connectors of the engine management computer. Refer to the **Wiring diagrams** Technical Note for the vehicle to locate the fuses and relays concerned.

CC.1	***NOTES***	None.

Check the thermoplunger no. **1** relay connections.
Check the engine management computer connections.
Repair if necessary.

Check the conformity of the thermoplunger no. **1** relay (relay removed):
– Insulation between **tracks 67 and 66** (in resting position).
– Resistance of the coil between **tracks 63 and 65**.
Replace the relay if its resistance is not: **90 Ω ± 5 at + 20˚C**.

Check **for insulation** from **+ 12 V** feed on the connection between:

Engine management computer, **connector C track J4** ⟶ **track 65** thermoplunger no. **1** relay mounting

Also check that this connection is **insulated** against the following connections:

Thermoplunger no. **1** relay mounting, **track 63** ⟶ **+ 12 V after relay**

Thermoplunger no. **1** relay mounting, **track 67** ⟶ **+ 12 V battery after fuse feed**

AFTER REPAIR	Deal with any other faults. Clear the fault memory. Switch off the ignition and carry out a road test followed by a test with the **diagnostic tool**.

GETtheMANUALS.org

DF240 **CONTINUED**	

CO.0	***NOTES***	None.

Check the thermoplunger no. **1** relay connections.
Check the engine management computer connections.
Repair if necessary.

Check **for + 12 V after relay feed** on **track 63** (or another track depending on the engine; check CC.1 on the other tracks) of the thermoplunger no. **1** relay mounting.
Measure the **resistance** of the relay coil between **tracks 63 and 65**:
Replace the relay if its resistance is not: **90 Ω ± 5 at + 20˚C**.

Check **the continuity and insulation** to **earth** of the connection between:

Engine management computer, **connector C track J4** ⟶ **track 65** thermoplunger no. **1** relay mounting

AFTER REPAIR	Deal with any other faults. Clear the fault memory. Switch off the ignition and carry out a road test followed by a test with the **diagnostic tool**.

GETtheMANUALS.org

DF253 STORED	FLOW DURING SELF TEST AFTER IGNITION IS SWITCHED OFF 1.DEF: Inconsistency with engine speed

1.DEF	***NOTES***	**Priorities when dealing with a number of faults:** Apply the interpretation of all other faults that are present or stored first.

The computer uses different strategies to switch off the engine. Either by setting the fuel flow to 0 (with the regulator) or by injector cut-out.
If during the power latch* phase, the speed does not fall below a certain value (**~ 300 rpm**) in a very short time (**< 2 seconds**) the fault will appear as stored.
Therefore all mechanical, hydraulic or other factors which could cause the engine to keep turning after the ignition has been switched off must be eliminated.
Check:
– that there are no leaks from the injector nozzles. See injector fault finding: apply **test 10**,
– the operation of the fuel pressure (or flow) solenoid valve. See **AC035 Fuel pressure solenoid valve** in the **Interpretation of commands** section,
– correct operation of the damper valve (if fitted to the vehicle). See **AC067 Damper valve** in the **Interpretation of commands** section.
Perform the necessary operations, clear the fault and then carry out the instructions again.
If the problem is still present, contact the Techline.

* The immobiliser warning light will flash a few seconds after switching the ignition off.

AFTER REPAIR	Deal with any other faults. Clear the fault memory. Switch off the ignition and carry out a road test followed by a test with the **diagnostic tool**.

GETtheMANUALS.org

DF276 PRESENT OR STORED	INJECTOR CODE PROGRAMMING 1.DEF: No code in memory 2.DEF: Internal electronic fault when writing

NOTES	**Conditions for applying the fault finding procedure to stored faults:** The fault reappears after: – The fault has been cleared from memory. – The ignition has been switched off. – The end of the power latch* phase and switching the ignition on again.
	Special notes: If the fault is present, the injection flow rate will be limited, and the vehicle's power will be limited.
	IMPORTANT Please observe the cleanliness guidelines and safety advice.

1.DEF	***NOTES***	None.

This fault is **present** on all blank computers (new or after reprogramming).
– Program the injector codes using:
either command **SC002 Enter injector codes**
or the **SC001 Write saved data** command
(Consult the procedures defined in the **Interpretation of commands** section).
– After the codes have been written:
– Switch off the ignition.
– Wait for the end of the power latch* phase and switch on the ignition again.
– Establish dialogue and clear the fault memory.
– End of operation.

WARNING
If fault **DF276** is still present after the injector codes have been entered, check that power latch* occurs each time the ignition is switched off.
To check this, switch off the ignition and wait **10 seconds** until the immobiliser warning light flashes.
If the immobiliser warning light flashes immediately after the ignition is switched off, the power latch* is no longer effective and the injection computer cannot store the information (programming, configurations, etc.).
Repair if necessary.
If all these checks are ineffective and the fault is still present, contact the Techline.

***** The immobiliser warning light will flash a few seconds after the ignition is switched off.

AFTER REPAIR	Deal with any other faults. Clear the fault memory. Switch off the ignition and carry out a road test followed by a test with the **diagnostic tool**.

GETtheMANUALS.org

DF276 **CONTINUED**	

2.DEF	***NOTES***	None.

– Switch off the ignition.
– Wait for the end of the power latch* phase then switch on the ignition again.
– Establish dialogue.
If the fault was previously **stored**, clear the fault memory and end the procedure.
If the fault is still **present**, contact the Techline.

***** The immobiliser warning light will flash a few seconds after the ignition is switched off.

AFTER REPAIR	Deal with any other faults. Clear the fault memory. Switch off the ignition and carry out a road test followed by a test with the **diagnostic tool**.

GETtheMANUALS.org

DF301 PRESENT OR STORED	AIR INLET CIRCUIT CC.1 : Wastegate valve in short circuit to + 12 V CO.0 : Turbocharging solenoid valve in open circuit or short circuit to earth 1.DEF: Lack of air in the intake circuit 2.DEF: Turbocharging pressure too high

NOTES	**Conditions for applying the fault finding procedure to stored faults:** For **CC.1 or CO.0**, if the fault reappears after: – clearing the fault from the memory, – actuation of the valve by the **AC004 Turbocharging solenoid valve** command. For **1.DEF or 2.DEF**, if the fault is declared present after: – the engine is started, – a road test.
	Special notes: Use bornier **Elé. 1681** for all operations on the connectors of the engine management computer.

CC.1	***NOTES***	None.

Check the connections of the turbocharging pressure relief solenoid valve.
Check the engine management computer connections.
Repair if necessary.

Measure the **resistance** of the turbocharging pressure relief solenoid valve between **tracks 1 and 2**.
Replace the solenoid valve if its resistance is not:
15.4 Ω ± 0.7 at + 20˚C for a *Pierburg* solenoid valve.
16.5 Ω ± 1.6 at + 25˚C for a *Bitron* solenoid valve.

Check **for insulation** from **+ 12 V** feed on the connection between:

Engine computer, **connector B track L2** → **track 1** turbocharging pressure relief solenoid valve connector

AFTER REPAIR	Deal with any other faults. Clear the fault memory. Switch off the ignition and carry out a road test followed by a test with the **diagnostic tool**.

GETtheMANUALS.org

DF301 **CONTINUED 1**	

CO.0	***NOTES***	None.

Check the connections of the turbocharging pressure relief solenoid valve.
Check the engine management computer connections.
Repair if necessary.

Measure the **resistance** of the turbocharging pressure relief solenoid valve between **tracks 1 and 2**.
Replace the solenoid valve if its resistance is not:
15.4 Ω ± 0.7 at + 20˚C for a *Pierburg* solenoid valve.
16.5 Ω ± 1.6 at + 25˚C for a *Bitron* solenoid valve.

Check **the continuity and insulation** to **earth** of the connection between:

Engine computer, **connector B track L2** → **track 1** of the turbocharging pressure relief solenoid valve connector

Check **for** the **+ 12 V after relay** feed on **track 2** of the turbocharging pressure relief solenoid valve connector.

AFTER REPAIR	Deal with any other faults. Clear the fault memory. Switch off the ignition and carry out a road test followed by a test with the **diagnostic tool**.

GETtheMANUALS.org

DF301 **CONTINUED 2**	

1.DEF	***NOTES***	**Priorities when dealing with a number of faults:** Apply the interpretation of the following faults first, if present or stored: – **DF301 Air inlet circuit: CO.0 or CC.1,** – **DF209 EGR valve position sensor circuit: 2.DEF or 3.DEF,** – **DF325 Exhaust gas recirculation function: CO.0 or 2.DEF,** – **DF199 Turbocharging pressure sensor: CO.0 or 2.DEF,** – **DF056 Air flow sensor circuit: 2.DEF.**

Check the connections of the turbocharging pressure relief solenoid valve.
Check the engine management computer connections.
Repair if necessary.
Check **the continuity and absence of interference resistance** on the connection between:

Engine computer, **connector B track L2** → **track 1** of the solenoid valve connector

12 V after injection relay → **track 2** of the solenoid valve connector

Measure the **resistance** of the turbocharging pressure relief solenoid valve between **tracks 1 and 2**.
Replace the solenoid valve if its resistance is not:
15.4 Ω ± 0.7 at + 20˚C for a *Pierburg* solenoid valve.
16.5 Ω ± 1.6 at + 25˚C for a *Bitron* solenoid valve.

Check the sealing of the high pressure air circuit:
Apply **test 4**.

Check the turbocharger: carry out **test 6** for a fixed geometry turbocharger, **test 7** for a variable geometry turbocharger, then **test 8** in both cases.

Check the exhaust gas recirculation circuit:
Apply **test 9**, part A.

AFTER REPAIR	Deal with any other faults. Clear the fault memory. Switch off the ignition and carry out a road test followed by a test with the **diagnostic tool**.

GETtheMANUALS.org

DF301 **CONTINUED 3**	

2.DEF	***NOTES***	**Priorities when dealing with a number of faults:** Firstly, apply the interpretation of the **DF199 Turbocharging pressure sensor, CC.1** fault, if it is present or stored.

Check the connections of the turbocharging pressure relief solenoid valve.
Check the engine management computer connections.
Repair if necessary.

Check **the resistance** of the turbocharging pressure relief solenoid valve between **tracks 1 and 2**:
Replace the solenoid valve if its resistance is not:
15.4 Ω ± 0.7 at + 20˚C for a *Pierburg* solenoid valve.
16.5 Ω ± 1.6 at + 25˚C for a *Bitron* solenoid valve.

Check the **continuity and absence of interference resistance** on the connection between:

Engine computer, **connector B track L2** ⟶ **track 1** of the turbocharging pressure relief solenoid valve connector

Check **for** the **+ 12 V after relay** feed on **track 2** of the turbocharging pressure relief connector.

● **Make sure the turbocharging pressure relief solenoid valve is not jammed open:**
– With the engine switched off, disconnect the input and output hoses of the solenoid valve.
With a *Pierburg* solenoid valve:
– Connect a vacuum pump to the inlet **union** and apply a vacuum.
– If the vacuum pressure **is not maintained**: replace the solenoid valve.
With a *Bitron* solenoid valve:
– Fit a plug to the solenoid valve outlet union.
– Connect a vacuum pump to the inlet **union** and apply a vacuum.
– If the vacuum **is maintained**: replace the solenoid valve.

● **Check that the control rod of the turbocharger is not jammed:**
– **Apply test 6 for a turbocharger with fixed geometry.**
– **Apply test 7 for a turbocharger with variable geometry.**

AFTER REPAIR	Deal with any other faults. Clear the fault memory. Switch off the ignition and carry out a road test followed by a test with the **diagnostic tool**.

GETtheMANUALS.org

DF325 PRESENT OR STORED	EXHAUST GAS RECIRCULATION FUNCTION CC.1 : Short circuit to + 12 V CO.0 : Open circuit or short circuit to earth 1.DEF: Negative loop deviation 2.DEF: Positive loop deviation 3.DEF: Negative loop deviation 4.DEF: Positive loop deviation

NOTES	**Conditions for applying the fault finding procedure to stored faults:** The fault reappears after: – clearing the fault from the memory, – the valve has been actuated by the **AC036 EGR valve** command.
	Special notes: Use bornier **Elé. 1681** for all operations on the connectors of the engine management computer.

CC.1	***NOTES***	None.

Check the exhaust gas recirculation valve connections:
Check the engine management computer connections.
Repair if necessary.

Measure **the resistances** of the exhaust gas recirculation valve (***Pierburg*** or ***Cooper*** type):
– between **tracks 1 and 5**: **from 7.5 Ω to 8.5 Ω at + 20˚C**.

– For a ***Pierburg*** type exhaust gas recirculation valve:
  – between **tracks 2 and 4**: **2400 Ω to 5600 Ω at + 20˚C**,
  – between **tracks 2 and 6**: **1900 Ω to 6400 Ω at + 20˚C**,
  – between **tracks 4 and 6**: **800 Ω to 3800 Ω at + 20˚C**.

If one of the resistances is not correct, replace the exhaust gas recirculation valve.

With the exhaust gas recirculation valve disconnected, check the **insulation** to **+ 12 V** of the connection between:

Engine computer, **connector B track M1** → **track 5** of the exhaust gas recirculation valve connector

If the fault persists, replace the exhaust gas recirculation valve. Refer to the **Replacement of components** section and follow the correct procedure to replace the exhaust gas recirculation valve.

AFTER REPAIR	Deal with any other faults. Clear the fault memory. Switch off the ignition and carry out a road test followed by a test with the **diagnostic tool**.

GETtheMANUALS.org

DF325 **CONTINUED 1**	

CO.0	***NOTES***	**Special notes:** In the event of the simultaneous presence of the **DF209 EGR valve position sensor circuit CO.0** fault, check that the exhaust gas recirculation valve connector is connected correctly.

Check the exhaust gas recirculation valve connections:
Check the engine management computer connections.
Repair if necessary.

Measure **the resistances** of the exhaust gas recirculation valve (***Pierburg*** or ***Cooper*** type):
– between **tracks 1 and 5**: **from 7.5 Ω to 8.5 Ω at + 20˚C**.

– For a ***Pierburg*** type exhaust gas recirculation valve:
  – between **tracks 2 and 4**: **2400 Ω to 5600 Ω at + 20˚C**.
  – between **tracks 2 and 6**: **1900 Ω to 6400 Ω at + 20˚C**.
  – between **tracks 4 and 6**: **800 Ω to 3800 Ω at + 20˚C**.

If one of the resistances is not correct, replace the exhaust gas recirculation valve.

Check **the continuity and insulation** to **earth** of the connection between:

Engine computer, **connector B track M1** ⟶ **track 5** exhaust gas recirculation valve connector

Check **for + 12 V after relay feed** on **track 1** of the exhaust gas recirculation valve connector.

If the fault persists, replace the exhaust gas recirculation valve. Refer to the **Replacement of components** section and follow the correct procedure to replace the exhaust gas recirculation valve.

AFTER REPAIR	Deal with any other faults. Clear the fault memory. Switch off the ignition and carry out a road test followed by a test with the **diagnostic tool**.

GETtheMANUALS.org

DF325 **CONTINUED 2**	

1.DEF ***2.DEF*** ***3.DEF*** ***4.DEF***	***NOTES***	**Priorities when dealing with a number of faults:** Apply the interpretation of fault **DF209 EGR valve position sensor circuit** first, then fault **DF056 air flowmeter circuit**, 1.DEF if they are present.

Check the exhaust gas recirculation valve connections:
Check the engine management computer connections.
Repair if necessary.

Check for leaks in the air inlet circuit (above all between the air flowmeter and the turbocharger: use **test 4**) and the exhaust gas recirculation circuit (use **test 9**, part A).
Check **the continuity and insulation** of the connections between:

Engine computer, **connector B track G2** → **track 3** air flowmeter connector

Engine computer, **connector B track H4** → **track 5** of air flow sensor connector

Check for the **+ 5 V** feed on **track 3** of the air flow sensor connector, with the vehicle with a + after ignition feed.
Check for the **+ 12 V after relay** feed on **track 4** of the air flow sensor connector.
Check for **an earth** on **track 6** of the air flow sensor connector.
Apply the interpretation of parameter **PR132 Air flow** explained in this note, at hot idle speed (coolant temperature > 80˚C).
Carry out the necessary repairs.

AFTER REPAIR	Deal with any other faults. Clear the fault memory. Switch off the ignition and carry out a road test followed by a test with the **diagnostic tool**.

GETtheMANUALS.org

DF374 PRESENT OR STORED	COMPUTER 1.DEF: Overvoltage in the capacitor controlling the injectors 2.DEF: Undervoltage in the capacitor controlling the injectors

NOTES	Check the conformity of the **+ 12 V battery feed** on **tracks M2 and M3, connector B** of the engine management computer (excess voltage or micro breaks). If necessary, check the charging circuit. (see **Technical Note 6014A Charging circuit fault finding**).

IMPORTANT
A badly insulated or incorrectly positioned engine wiring harness may be susceptible to disruption caused by the voltage supply to the starter. This "electrical interference" disrupts the engine speed signal and causes this fault. It is often intermittent but is always accompanied by failure of the engine to start.
In the starting phase, check with the oscilloscope that there is no interference on the engine speed signal during the first engine rotations.
In the event of interference:
- check that the engine wiring and starter motor are correctly positioned.
- check that the engine speed signal connection is correctly cabled.

If the fault is still present:
Carefully check the clips and tabs of the **connections for each injector**.
If the fault is still present:
Clear the fault from the computer memory.
Switch off the ignition, wait for the end of the power latch*, then switch the ignition back on.
Start the engine and re-establish dialogue:
If the fault recurs, contact the Techline.

***** The immobiliser warning light will flash a few seconds after the ignition is switched off.

AFTER REPAIR	Deal with any other faults. Clear the fault memory. Switch off the ignition and carry out a road test followed by a test with the **diagnostic tool**.

GETtheMANUALS.org

DF436 **STORED**	DETECTION OF ENGINE MISFIRING 1.DEF: Cylinder 1 injector 2.DEF : Cylinder 2 injector 3.DEF : Cylinder 3 injector 4.DEF : Cylinder 4 injector

NOTES	**Conditions for applying the fault finding procedure to stored faults:** The fault reappears after: – the fault memory has been cleared, – starting the engine with a coolant temperature of 50 °C followed by a delay of **3 min** at idling speed.
	Priorities when dealing with a number of faults: Apply the interpretation of these faults first: **DF197 Fuel pressure signal**, present or stored. **DF040 Cylinder 1 injector circuit**, present or stored. **DF041 Cylinder 2 injector circuit**, present or stored. **DF042 Cylinder 3 injector circuit**, present or stored. **DF043 Cylinder 4 injector circuit**, present or stored. **Special notes:** Check the consistency between the stored injector codes and the ones engraved on each injector. Check the **insulation, continuity and the absence of interference resistance** by running **test 10**.

1.DEF ***2.DEF*** ***3.DEF*** ***4.DEF***	***NOTES***	**Before** replacing an injector, check that its sealing washer is in place and in good condition. **After** replacing an injector, follow the injector code programming procedure (see **Replacement of components** section).
		IMPORTANT To remove/refit injectors, obey the cleanliness guidelines and safety advice (defined in Section **13B** of the Workshop Repair Manual).

AFTER REPAIR	Deal with any other faults. Clear the fault memory. Switch off the ignition and carry out a road test followed by a test with the **diagnostic tool**.

GETtheMANUALS.org

DF436 **CONTINUED**	

1) If a single cylinder is declared with misfiring status:
– Check the condition of the engine by performing the compression test using the Clip Technic tool or special tool.
  – If the 4 cylinders have the same stroke speed, replace the injector identified by the fault.
  – If there is a difference between the cylinders, check the compression of the cylinder concerned.
  – If a compression is not correct, make the necessary repairs.
  – If the compression is correct, replace the injector concerned*.
– After the operation, clear the fault and perform a test, **with the engine at idle speed**, and the engine **temperature > 50 ˚C** for **2 minutes** and check that no faults appear on the diagnostic tool to validate the repairs.

2) If several cylinders are declared with misfiring status:
  – Select **Sub-function: FUEL CIRCUIT** on the diagnostic tool.
  – **Engine at idle speed**, **engine coolant temperature > 50 ˚C** for **2 mins**, display the flow correction values for each injector:

- **PR364 Cylinder no. 1 fuel flow correction,**
- **PR365 Cylinder no. 4 fuel flow correction,**
- **PR405 Cylinder no. 4 fuel flow correction,**
- **PR406 Cylinder no. 3 fuel flow correction.**

The **normal value** for flow correction for an injector is approximately **± 1 mm^3/stroke**. This tolerance may increase with time, but indicates an injector/cylinder fault if it exceeds **± 5 mm^3/stroke**.

a) If at least one of these values = ± 5 mm^3/cp:
– Check the condition of the engine by performing the Check cylinder balance test.
  – If the 4 cylinders have the same stroke speed, replace the injector* with the largest correction.
  – If there is a difference between the cylinders, check the compression with the flow correction **furthest from the normal value**.
  – If the compression test reveals a cylinder fault, carry out the necessary repairs.
  – If the compression is correct, replace the injector of the cylinder concerned*.
– Clear the fault and perform a test with the **engine at idle speed**, and the **engine coolant temperature > 50˚C** for **2 minutes** and check that no faults appear on the diagnostic tool and that the correction values do not reach ± 5 mm^3/stroke to confirm the repair:
– If an(other) cylinder(s) is (are) still declared in misfiring status, repeat starting at **2** (or **1**).
– If the fault does not recur, end the fault finding procedure.

If the problem is still present, contact the Techline.

* To remove/refit injectors, obey the cleanliness guidelines and safety advice (defined in Section **13B** of the Workshop Repair Manual).

AFTER REPAIR	Deal with any other faults. Clear the fault memory. Switch off the ignition and carry out a road test followed by a test with the **diagnostic tool**.

GETtheMANUALS.org

NOTES	Only check conformity after a full check with the **diagnostic tool**. The values shown in this conformity check are given as a guide. Execution conditions: **ENGINE OFF, IGNITION ON**.

MAIN SCREEN

Order	Function	Parameter or Status Check or Action		Display and notes	Fault finding
1	Supply	**ET001:**	Computer + after ignition feed	**PRESENT,** ignition on	In the event of a fault, apply the interpretation of **DF046 Battery voltage** or **DF222 Main relay**.
		PR071:	Computer feed voltage	**9 V < X < 16 V**	In the event of a fault, test the battery and carry out a fault finding procedure on the charging circuit.
		PR215:	Sensor supply voltage no. 1	**4.9 V < X < 5.1 V**	
		PR216:	Sensor supply voltage no. 2	**4.9 V < X < 5.1 V**	
2	Engine speed	**PR055:**	Engine speed	Indicates the engine's speed of rotation in rpm. **With the ignition on 0 rpm**	In the event of a fault, refer to the interpretation of fault **DF195 Camshaft sensor/engine speed consistency**.
		PR190:	Engine speed setpoint	**820 rpm ± 50**	According to the increase or decrease in the diagnostic tool's **Configuration** menu.
		PR014:	Idling speed correction	**X = 0 rpm ± 50**	
3	Injection configuration	**ET104:**	Injector code use	**YES**	In the event of a fault, consult the interpretation of **DF276 Injector code programming**.

GETtheMANUALS.org

NOTES	Only check conformity after a full check with the **diagnostic tool**. The values shown in this conformity check are given as a guide. Execution conditions: **ENGINE OFF, IGNITION ON**.

MAIN SCREEN (continued 1)

Order	Function	Parameter or Status Check or Action		Display and notes	Fault finding
4	Pressure	**PR035:**	Atmospheric pressure	Indicates the atmospheric pressure in mbar. The sensor is built into the computer. **750 mbar < X < 1030 mbar**	In the event of a fault, consult the interpretation of fault **DF200 Atmospheric pressure sensor**.
		PR038:	Rail pressure	**0 < X < 30 bar**	In the event of a fault, consult the interpretation for fault **DF192 Fuel pressure sensor circuit**.
		PR041:	Turbocharging pressure	**750 mbar < X < 1030 mbar**	In the event of a fault, refer to the interpretation of fault **DF199 Turbocharging pressure sensor circuit**.
5	Temperature	**PR058:**	Air temperature	Shows the inlet air temperature	In the event of a fault, consult the interpretation of fault **DF002 Air temperature sensor circuit**.
		PR063:	Fuel temperature	Gives the fuel temperature in ˚C.	In the event of a fault, consult the interpretation of fault **DF098 Fuel temperature sensor circuit**.
		PR064:	Coolant temperature	Gives the coolant temperature in ˚C.	In the event of a fault, consult the interpretation of fault **DF001 Coolant temperature sensor circuit**.

GETtheMANUALS.org

NOTES	Only check conformity after a full check with the **diagnostic tool**. The values shown in this conformity check are given as a guide. Execution conditions: **ENGINE OFF, IGNITION ON**.

MAIN SCREEN (CONTINUED 2)

Order	Function	Parameter or Status Check or Action	Display and notes	Fault finding
6	Speed signal	**PR089:** Vehicle speed	Indicates the vehicle speed in mph (km/h). This parameter is transmitted by the ABS computer. This signal is transmitted to the injection on the multiplex network.	In the event of a fault test the multiplex network. Check the ABS.

GETtheMANUALS.org

NOTES	Only check conformity after a full check with the **diagnostic tool**. The values shown in this conformity check are given as a guide. Execution conditions: **ENGINE OFF, IGNITION ON**.

AIR CIRC. (TURBO/INLET)

Order	Function	Parameter or Status Check or Action		Display and notes	Fault finding
1	Engine speed	**PR055:**	Engine speed	Indicates the engine's speed of rotation in rpm. **With the ignition on 0 rpm**	In the event of a fault, refer to the interpretation of fault **DF195 Camshaft sensor/engine speed consistency**.
2	Temperature	**PR058:**	Air temperature	Indicates the inlet air temperature in °C.	In the event of a fault, consult the interpretation of fault **DF002 Air temperature sensor circuit**.
3	Turbocharging	**PR009:**	Turbocharging pressure setpoint	**790 < X < 1010 mbar**	None.
		PR041:	Turbocharging pressure	**PR041 = PR035 ± 10 mbar**	In the event of a fault, refer to the interpretation of fault **DF199 Turbocharging pressure sensor**.
		PR209:	Turbocharging pressure loop difference	**X = PR009 - PR041 = ~ 0**	If **PR209** is significant, refer to the interpretation of the **AC004 Turbocharging solenoid valve** command.
		PR047:	Turbocharging pressure OCR	**X = 5%**	

GETtheMANUALS.org

NOTES	Only check conformity after a full check with the **diagnostic tool**. The values shown in this conformity check are given as a guide. Execution conditions: **ENGINE OFF, IGNITION ON**.

AIR CIRC. (TURBO/INLET) (CONTINUED)

Order	Function	Parameter or Status Check or Action		Display and notes	Fault finding
4	Air circulation	**PR035:**	Atmospheric pressure	Indicates the atmospheric pressure in mbar. The sensor is built into the computer. **Default value: 750 mbar.**	In the event of a fault, consult the interpretation of **DF200 Atmospheric pressure sensor**.
		PR132:	Air flow	**0 < X < 10 kg/h**	In the event of a fault, consult the interpretation of parameter **DF056 Air flow sensor circuit**.
		ET212:	Damper valve control	**INACTIVE**	In the event of a fault, consult the interpretation for fault **DF226 Damper valve circuit**.
		ET211:	Swirl flap control	**INACTIVE**	In the event of a fault, consult the interpretation of fault **DF068 Swirl flap control circuit**.
5	Exhaust gas recirculation	**PR220:**	EGR valve OCR	**X = 5%**	In the event of a fault, go to the fault finding for the **AC036 EGR valve** command.
6	Sensor feed	**PR073:**	Air flowmeter feed voltage	**0.5 V < X < 1 V**	In the event of a fault, consult the interpretation of parameter **DF056 Air flow sensor circuit**.
		PR071:	Computer feed voltage	**9 V < X < 16 V**	In the event of a fault, test the battery and carry out a fault finding procedure on the charging circuit.
		PR215:	Sensor supply voltage no. 1	**4.9 V < X < 5.1 V**	
		PR216:	Sensor supply voltage no. 2	**4.9 V < X < 5.1 V**	

GETtheMANUALS.org

NOTES	Only check conformity after a full check with the **diagnostic tool**. The values shown in this conformity check are given as a guide. Execution conditions: **ENGINE OFF, IGNITION ON**.

STARTING

Order	Function	Parameter or Status Check or Action		Display and notes	Fault finding
1	Power supply	**ET001:**	Computer + after ignition feed	Ignition on **PRESENT**	In the event of a fault, apply the interpretation of **DF046 Battery voltage** or **DF222 Main relay**.
		PR071:	Computer feed voltage	**9 V < X < 16 V**	In the event of a fault, test the battery and carry out a fault finding procedure on the charging circuit.
		PR215:	Sensor supply voltage no. 1	**4.9 V < X < 5.1 V**	
		PR216:	Sensor supply voltage no. 2	**4.9 V < X < 5.1 V**	
2	Engine immobiliser	**ET341:**	Immobiliser code programmed	**YES**	In the event of a fault, consult the fault finding procedure for the immobiliser.
		ET003:	Engine immobiliser	**INACTIVE**	
3	Synchronisation	**ET238:**	Synchronisation	**STANDBY** then becomes "completed" once the engine is started.	Any phase difference between the camshaft sensor and the TDC sensor (belt stretched or timing offset) will lead to the appearance of **DF195 Engine speed/camshaft sensor consistency**. If starting is impossible: while the engine is being turned by the starter, the status is **IN PROGRESS** and will only change to **COMPLETED** if the engine starts.

GETtheMANUALS.org

NOTES	Only check conformity after a full check with the **diagnostic tool**. The values shown in this conformity check are given as a guide. Execution conditions: **ENGINE OFF, IGNITION ON**.

STARTING (Continued)

Order	Function	Parameter or Status Check or Action	Display and notes	Fault finding
4	Control	**ET010:** Low pressure pump relay control	**ACTIVE** with the CP1 high pressure pump. **INACTIVE** with the CP3 high pressure pump.	In the event of a fault, consult the interpretation of **DF207 Low pressure pump relay circuit**.
5		**ET007:** Pre-postheating control	**INACTIVE** **Status ET007 is ACTIVE a few seconds after the ignition is switched on, and for postheating**	In the event of a fault, consult the interpretation of fault **DF017 Preheating unit control circuit**.

GETtheMANUALS.org

NOTES	Only check conformity after a full check with the **diagnostic tool**. The values shown in this conformity check are given as a guide. Execution conditions: **ENGINE OFF, IGNITION ON**.

COLD LOOP

Order	Function	Parameter or Status Check or Action		Display and notes	Fault finding
1	Engine speed	**PR055:**	Engine speed	Indicates the engine's speed of rotation in rpm. **Ignition on at 0 rpm**	In the event of a fault, refer to the interpretation of fault **DF195 Camshaft sensor/engine speed consistency**.
2	Speed signal	**PR089:**	Vehicle speed	Indicates the vehicle speed in mph (km/h). This parameter is transmitted by the ABS computer. This signal is transmitted to the injection on the multiplex network.	In the event of a fault test the multiplex network. Check the ABS.
3	Coolant temperature	**PR064:**	Coolant temperature	Shows the engine coolant temperature in ˚C	In the event of a fault, refer to the interpretation of **DF001 Coolant temperature sensor circuit**.
4	Driver control	**ET088:**	Compressor actuation request	**NO**	If the air conditioning is authorised or if the compressor is actuated, refer to the interpretation for **ET088** and **ET004**.
		ET004:	Air conditioning authorisation	**NO**	
5	Engine cooling	**ET143:**	Low-speed fan assembly relay control	**Ignition on** **< 80˚C INACTIVE**	If the fan assemblies are supplied with ignition on, the injection system may be in defect mode. Carry out a system fault test and refer to the interpretation of any faults.
		ET144:	High-speed fan assembly relay control		

GETtheMANUALS.org

NOTES	Only check conformity after a full check with the **diagnostic tool**. The values shown in this conformity check are given as a guide. Execution conditions: **ENGINE OFF, IGNITION ON**.

HEATING

Order	Function	Parameter or Status Check or Action		Display and notes	Fault finding
1	Engine speed	**PR055:**	Engine speed	Indicates the engine's speed of rotation in rpm. **Ignition on at 0 rpm**	In the event of a fault, refer to the interpretation of fault **DF195 Camshaft sensor/engine speed consistency**.
2	Coolant temperature	**PR064:**	Coolant temperature	Shows the engine coolant temperature in ˚C	In the event of a fault, refer to the interpretation of **DF001 Coolant temperature sensor circuit**.
3	Relay control	**ET205:**	Thermoplunger no. 1 relay control	**ACTIVE or INACTIVE.** Depending on the computer programming, air and coolant temperatures.	None.
		ET206:	Thermoplunger no. 2 relay control		
		ET207:	Thermoplunger no. 3 relay control		

GETtheMANUALS.org

NOTES	Only check conformity after a full check with the **diagnostic tool**. The values shown in this conformity check are given as a guide. Execution conditions: **ENGINE OFF, IGNITION ON**.

FUEL CIRCUIT

Order	Function	Parameter or Status Check or Action		Display and notes	Fault finding
1	Engine speed	**PR055:**	Engine speed	**Indicates the engine's speed of rotation in rpm. Ignition on at 0 rpm**	In the event of a fault, refer to the interpretation of fault **DF195 Camshaft sensor/engine speed consistency**.
2	Injection configuration	**ET104:**	Injector code use	**YES**	In the event of a fault, consult the interpretation of **DF276 Injector code programming**.
3	Temperature	**PR063:**	Fuel temperature	**Indicates the fuel temperature Default value: 60˚C.**	In the event of a fault, consult the interpretation of **DF098 Fuel temperature sensor circuit**.
4	Pressure	**PR008:**	Rail reference pressure	**Indicates the theoretical pressure value for optimum engine operation X = 250 ± 50 bar**	In the event of a fault, consult the interpretation of fault **DF208 Fuel pressure solenoid valve circuit.**
		PR038:	Rail pressure	**X = 0 bar Default value: 250 bar.**	If the engine has just been stopped, wait a few seconds to obtain this value.
		PR213:	Rail pressure loop difference	**X = PR008 - PR038 X = 0 stationary**	
5	Flow	**PR203:**	Fuel flow setpoint at idle speed	**X = 0.0 mm^3/stroke**	None.
		PR017:	Fuel flow	**Ignition on 10 < X < 80 mm^3/ stroke**	None.
		PR302:	Regulated fuel flow	**X = ~ 25000 mm^3/s**	None.

GETtheMANUALS.org

NOTES	Only check conformity after a full check with the **diagnostic tool**. The values shown in this conformity check are given as a guide. Execution conditions: **ENGINE OFF, IGNITION ON**.

FUEL CIRCUIT (continued)

Order	Function	Parameter or Status Check or Action		Display and notes	Fault finding
6	Power supply	**PR071:**	Computer feed voltage	**9 V < X < 16 V**	In the event of a fault, test the battery and carry out a fault finding procedure on the charging circuit.
7	Flow correction	**PR364:**	Cylinder no. 1 fuel flow correction	**X = 0.0 mm^3/stroke**	In the event of a fault, consult **test 10 "Poor injector operation"**.
		PR405:	Cylinder no. 2 fuel flow correction		
		PR406:	Cylinder no. 3 fuel flow correction		
		PR365:	Cylinder no. 4 fuel flow correction		
8	Control	**ET010:**	Low pressure pump relay control	**ACTIVE** with the CP1 high pressure pump. **INACTIVE** with the CP3 high pressure pump.	In the event of a fault, consult the interpretation of **DF207 Low pressure pump relay circuit**.

GETtheMANUALS.org

NOTES	Only check conformity after a full check with the **diagnostic tool**. The values shown in this conformity check are given as a guide. Execution conditions: **ENGINE OFF, IGNITION ON**.

EMISSION CONTROL/OBD

Order	Function	Parameter or Status Check or Action		Display and notes	Fault finding
1	Engine speed	**PR055:**	Engine speed	**Indicates the engine's speed of rotation in rpm. Ignition on at 0 rpm**	In the event of a fault, refer to the interpretation of fault **DF195 Camshaft sensor/engine speed consistency**.
2	Exhaust gas recirculation	**PR220:**	EGR valve OCR	**X = 5%**	In the event of a fault, go to the fault finding for the **AC036 EGR valve** command.
		PR022:	EGR valve position loop difference	**0 < X < 5 mV** (depending on programming).	
		PR051:	EGR valve position feedback	**0.75 < X < 1.5 V** (depending on programming).	
		ET272:	First EGR offset programming	**COMPLETED**	
		PR128:	First EGR valve offset	**0.75 < X < 1.5 V**	
		PR129:	Last EGR valve offset	**0.75 < X < 1.5 V**	
3	Flow	**PR132:**	Air flow	**0 < X < 10 kg/h** (depending on programming).	In the event of a fault, consult the interpretation of parameter **DF056 Air flow sensor circuit**.

GETtheMANUALS.org

NOTES	Only check conformity after a full check with the **diagnostic tool**. The values shown in this conformity check are given as a guide. Execution conditions: **ENGINE OFF, IGNITION ON**.

DRIVER PARAMETERS

Order	Function	Parameter or Status Check or Action		Display and notes	Fault finding
1	Engine speed	**PR055:**	Engine speed	Indicates the engine's speed of rotation in rpm. **Ignition on at 0 rpm**	In the event of a fault, refer to the interpretation of fault **DF195 Camshaft sensor/engine speed consistency**.
		PR190:	Engine speed setpoint	**820 rpm ± 50**	According to the increase or decrease in the diagnostic tool's **Configuration** menu.
2	Accelerator pedal sensor	**ACCELERATOR PEDAL NO LOAD**			
		PR147:	Pedal potentiometer voltage gang 1	**X = 0.75 V ± 0.09**	**IMPORTANT** Approximately every **5 seconds**, the computer performs a test to set **PR148** at **0 V**. This corresponds to normal operation.
		PR030:	Pedal load	**X = 0%**	
		PR217:	Pedal load (gang no. 1)	**X = 0%**	
		PR218:	Pedal load (gang no. 2)	**X = 0%**	
		PR148:	Pedal potentiometer voltage gang 2	**X = 0.37 V ± 0.05**	

GETtheMANUALS.org

NOTES	Only check conformity after a full check with the **diagnostic tool**. The values shown in this conformity check are given as a guide. Execution conditions: **ENGINE OFF, IGNITION ON**.

DRIVER PARAMETERS (continued)

Order	Function	Parameter or Status Check or Action		Display and notes	Fault finding
3	Accelerator pedal sensor (continued)	**ACCELERATOR PEDAL FULL LOAD**			
		PR147:	Pedal potentiometer voltage gang 1	**X = 4.25 V ± 0.31**	**IMPORTANT** Approximately every **5 seconds**, the computer performs a test to set **PR148** at **0 V**. This corresponds to normal operation.
		PR030:	Pedal load without CC/SL	**100 < X < 127%**	
		PR030:	Pedal load with CC/SL	**100 < X < 139%**	
		PR217:	Pedal load (gang no. 1) without CC/SL	**105 < X < 127%**	
		PR217:	Pedal load (gang no. 1) with CC/SL	**X = 134% ± 5**	
		PR218:	Pedal load (gang no. 2) without CC/SL	**105 < X < 127%**	
		PR218:	Pedal load (gang no. 2) with CC/SL	**X = 134% ± 5**	
		PR148:	Pedal potentiometer voltage gang 2	**X = 2.12 V ± 0.16**	
4	Brake pedal position	**ET122:**	Brake contact no. 1 signal	Brake pedal released **ABSENT**	Nonconformity of the brake signals and or the clutch switch signals can cause "engine racing" during gear changes.
		ET123:	Brake switch no. 2 signal	Brake pedal released **ABSENT**	
5	Clutch pedal position	**ET233:**	Clutch pedal	Clutch pedal released **RELEASED**	

GETtheMANUALS.org

NOTES	Only check conformity after a full check with the **diagnostic tool**. The values shown in this conformity check are given as a guide. Execution conditions: **ENGINE OFF, IGNITION ON**.

CRUISE CONTROL/SPEED LIMITER

Order	Function	Parameter or Status Check or Action		Display and notes	Fault finding
1	Cruise control/ Speed limiter	**PR089:**	Vehicle speed	Indicates the vehicle speed in mph (km/h). This parameter is transmitted by the ABS computer. This signal is transmitted to the injection on the multiplex network.	In the event of a fault test the multiplex network. Check the ABS.
		PR130:	Cruise control setpoint	Shows the cruise control cruising speed requested by the driver.	Cruise control can only be activated for a speed V > 18 mph (30 km/h).
		ET042:	Cruise control/ speed limiter	**INACTIVE:** when no button is pressed.	In the event of a fault, refer to the interpretation of status **ET042**.
				CRUISE CONTROL: cruise control ON/OFF button pressed	Lights the green warning light on the instrument panel.
				SPEED LIMITER: speed limiter ON/OFF button pressed	Lights the orange warning light on the instrument panel.
		ET413:	Cruise control/ speed limiter function	**INACTIVE:** When no button is pressed.	In the event of a fault, refer to the interpretation of statuses **ET042 Cruise control/Speed limiter, ET413 Cruise control/Speed limiter function and ET415 Cruise control/Speed limiter deactivation**.
				INCREASE: increase button pressed	
				DECREASE: decrease button pressed	
				CANCEL: "0" button pressed	
				REPEAT: R button pressed	

GETtheMANUALS.org

NOTES	Only check conformity after a full check with the **diagnostic tool**. The values shown in this conformity check are given as a guide. Execution conditions: **ENGINE OFF, IGNITION ON**.

CRUISE CONTROL/SPEED LIMITER (CONTINUED 1)

Order	Function	Parameter or Status Check or Action		Display and notes	Fault finding
2	Cruise control/ speed limiter (continued)	**ET415:**	Deactivation of cruise control/ speed limiter note: Cruise control can only be activated for a Vehicle speed > 18 mph (30 km/h)	**INACTIVE:** when no button is pressed.	The cruise control and speed limiter functions can be deactivated by various events. **IMPORTANT** Certain deactivations are stored; to reinitialise this status use **RZ007 Fault memory** In the event of a fault, refer to the interpretation of statuses **ET042 Cruise control/Speed limiter, ET413 Cruise control/ Speed limiter function and ET415 Cruise control/Speed limiter deactivation**.
				STATUS 1: vehicle speed not updated.	
				STATUS 2: vehicle speed invalid.	
				STATUS 3: cruise control or speed limiter fault.	
				STATUS 4: inconsistency between the request and the vehicle speed.	
				STATUS 5: fault detected by injection computer	
				STATUS 6: gear selector lever in neutral	
				STATUS 7: disconnection of engine/gearbox	
				STATUS 8: traction control request.	
				STATUS 9: brake pedal depressed.	
				STATUS 10: suspend button pressed	

GETtheMANUALS.org

NOTES	Only check conformity after a full check with the **diagnostic tool**. The values shown in this conformity check are given as a guide. Execution conditions: **ENGINE OFF, IGNITION ON**.

CRUISE CONTROL/SPEED LIMITER (CONTINUED 2)

Order	Function	Parameter or Status Check or Action		Display and notes	Fault finding
3		**PR178:**	Cruise control switch voltage	**X = 4.9 V ± 0.2** switches in rest position X = **0.2 ± 0.2 V O** pressed X = **3.7 ± 0.2 V R** pressed X = **2.4 ± 0.2 V** if **+** pressed X = **1.3 ± 0.2 V** if **-** pressed	None.
4	Brake pedal position	**ET122:**	Brake contact no. 1 signal	Brake pedal released **ABSENT**	Nonconformity of the brake signals and or the clutch switch signals can cause "engine racing" during gear changes.
		ET123:	Brake switch no. 2 signal	Brake pedal released **ABSENT**	
5	Clutch pedal position	**ET233:**	Clutch pedal	Clutch pedal released **RELEASED**	

GETtheMANUALS.org

NOTES	Only check conformity after a full check with the **diagnostic tool**. The values shown in this conformity check are given as a guide. Execution conditions: **ENGINE OFF, IGNITION ON**.

ENGINE COOLING

Order	Function	Parameter or Status Check or Action		Display and notes	Fault finding
1	Coolant temperature	**PR064:**	Coolant temperature	Shows the engine coolant temperature in ˚C	In the event of a fault, refer to the interpretation of **DF001 Coolant temperature sensor circuit**.
2	Fan assemblies	**ET143:**	Low-speed fan assembly relay control	**Engine ignition on < 80˚ INACTIVE**	If the fan assemblies are supplied with ignition on, the injection system may be in defect mode. Carry out a system fault test and refer to the interpretation of any faults.
		ET144:	High-speed fan assembly relay control		
3	Sensor feed	**PR071:**	Computer feed voltage	**9 V < X < 16 V**	In the event of a fault, test the battery and carry out a fault finding procedure on the charging circuit.
		PR215:	Sensor supply voltage no. 1	**4.9 V < X < 5.1 V**	
		PR216:	Sensor supply voltage no. 2	**4.9 V < X < 5.1 V**	

GETtheMANUALS.org

NOTES	Only check conformity after a full check with the **diagnostic tool**. The values shown in this conformity check are given as a guide. Execution conditions: **ENGINE OFF, IGNITION ON**.

IGNITION/PREHEATING

Order	Function	Parameter or Status Check or Action		Display and notes	Fault finding
1	Power supply	**ET001:**	Computer + after ignition feed	Ignition on **PRESENT**	In the event of a fault, apply the interpretation for **DF046 Battery voltage or DF222 Main relay**.
2	Engine speed	**PR055:**	Engine speed	Indicates the engine's speed of rotation in rpm.	In the event of a fault, refer to the interpretation of fault **DF195 Camshaft sensor/engine speed consistency**.
3	Temperature	**PR058:**	Air temperature	Indicates the inlet air temperature in ˚C.	In the event of a fault, consult the interpretation of fault **DF002 Air temperature sensor circuit**.
		PR064:	Coolant temperature	Gives the coolant temperature in ˚C.	In the event of a fault, refer to the interpretation of **DF001 Coolant temperature sensor circuit**.
4	Preheating	**ET007:**	Pre-postheating unit control	**Status ET007 is ACTIVE a few seconds after the ignition is switched on, and for postheating**	In the event of a fault, (**ET007** locked in **ACTIVE**), refer to the interpretation of fault **DF017 Preheating unit control circuit**.
		ET120:	Pre-postheating signal	**ABSENT** as soon as pre-postheating has finished.	
5	Sensor feed	**PR071:**	Computer feed voltage	**9 V < X < 16 V**	In the event of a fault, test the battery and carry out a fault finding procedure on the charging circuit.

GETtheMANUALS.org

NOTES	Only check conformity after a full check with the **diagnostic tool**. The values shown in this conformity check are given as a guide. Execution conditions: **engine idling and warm, coolant temperature > 80˚C**.

MAIN SCREEN

Order	Function	Parameter or Status Check or Action		Display and notes	Fault finding
1	Power supply	**ET001:**	Computer + after ignition feed	**PRESENT**	In the event of a fault, apply the interpretation of **DF046 Battery voltage** or **DF222 Main relay**.
		PR071:	Computer feed voltage	**9 V < X < 16 V**	In the event of a fault, test the battery and carry out a fault finding procedure on the charging circuit.
		PR215:	Sensor supply voltage no. 1	**4.9 V < X < 5.1 V**	
		PR216:	Sensor supply voltage no. 2	**4.9 V < X < 5.1 V**	
2	Engine speed	**PR055:**	Engine speed	Indicates the engine's speed of rotation in rpm. **820 rpm ± 50**	In the event of a fault, refer to the interpretation of fault **DF195 Camshaft sensor/engine speed consistency**.
		PR190:	Engine speed setpoint	**820 rpm ± 50**	According to the increase or decrease in the diagnostic tool's **Configuration** menu.
		PR014:	Idling speed correction	**X = 0 rpm ± 50**	
3	Injection configuration	**ET104:**	Injector code use	**YES**	In the event of a fault, consult the interpretation of **DF276 Injector code programming**.

GETtheMANUALS.org

NOTES	Only check conformity after a full check with the **diagnostic tool**. The values shown in this conformity check are given as a guide. Execution conditions: **engine idling and warm, coolant temperature > 80˚C**.

MAIN SCREEN (SUITE)

Order	Function	Parameter or Status Check or Action		Display and notes	Fault finding
4	Pressure	**PR035:**	Atmospheric pressure	Indicates the atmospheric pressure in mbar. The sensor is built into the computer. **Default value: 750 mbar.**	In the event of a fault, consult the interpretation of fault **DF200 Atmospheric pressure sensor**.
		PR038:	Rail pressure	**230 mbar < X < 330 bar**	In the event of a fault, consult the interpretation for fault **DF192 Fuel pressure sensor circuit**.
		PR041:	Turbocharging pressure	**750 mbar < X < 1030 mbar**	In the event of a fault, refer to the interpretation of fault **DF199 Turbocharging pressure sensor circuit**.
5	Temperature	**PR058:**	Air temperature	Shows the inlet air temperature	In the event of a fault, consult the interpretation of fault **DF002 Air temperature sensor circuit**.
		PR063:	Fuel temperature	Shows the fuel temperature.	None.
		PR064:	Coolant temperature	Gives the coolant temperature in ˚C.	In the event of a fault, consult the interpretation of fault **DF001 Coolant temperature sensor circuit.**
6	Speed signal	**PR089:**	Vehicle speed	Indicates the vehicle speed in mph (km/h). This parameter is transmitted by the ABS computer. This signal is transmitted to the injection on the multiplex network.	In the event of a fault test the multiplex network. Check the ABS.

GETtheMANUALS.org

NOTES	Only check conformity after a full check with the **diagnostic tool**. The values shown in this conformity check are given as a guide. Execution conditions: **engine idling and warm, coolant temperature > 80˚C**.

AIR CIRC. (TURBO/INLET)

Order	Function	Parameter or Status Check or Action		Display and notes	Fault finding
1	Engine speed	**PR055:**	Engine speed	Indicates the engine's speed of rotation in rpm. **820 rpm ± 50**	In the event of a fault, refer to the interpretation of fault **DF195 Camshaft sensor/engine speed consistency**.
2	Temperature	**PR058:**	Air temperature	Indicates the inlet air temperature in ˚C.	In the event of a fault, consult the interpretation of fault **DF002 Air temperature sensor circuit**.
3	Turbocharging	**PR009:**	Turbocharging pressure setpoint	**790 mbar < X < 1030 mbar**	None.
		PR041:	Turbocharging pressure	**PR041 = PR035 ± 20 mbar**	In the event of a fault, refer to the interpretation of fault **DF199 Turbocharging pressure sensor**.
		PR209:	Turbocharging pressure loop difference	**0 < X = PR009 - PR041 < 40 mbar**	If **PR209** is significant, refer to the interpretation of the **AC004 Turbocharging solenoid valve** command.
		PR047:	Turbocharging pressure OCR*	**50 < X < 95%**	

*OCR: Opening Cyclic Ratio

GETtheMANUALS.org

NOTES	Only check conformity after a full check with the **diagnostic tool**. The values shown in this conformity check are given as a guide. Execution conditions: **engine idling and warm, coolant temperature > 80˚C**.

AIR CIRC. (TURBO/INLET) (CONTINUED)

Order	Function	Parameter or Status Check or Action		Display and notes	Fault finding
4	Air circulation	**PR035:**	Atmospheric pressure	Indicates the atmospheric pressure in mbar. The sensor is built into the computer. **Default value: 750 mbar.**	In the event of a fault, consult the interpretation of **DF200 Atmospheric pressure sensor**.
		PR132:	Air flow	**20 kg/h < X < 60 kg/h**	In the event of a fault, consult the interpretation of parameter **DF056 Air flow sensor circuit**.
		ET212:	Damper valve control	**INACTIVE**	In the event of a fault, consult the interpretation for fault **DF226 Damper valve circuit**.
5	Exhaust gas recirculation	**PR220:**	EGR valve OCR	**X = from 5% or 40% ± 5%** (depending on programming).	In the event of a fault, go to the fault finding for the **AC036 EGR valve** command.
6	Air circulation	**ET211:**	Swirl flap control	**INACTIVE**	In the event of a fault, consult the interpretation of fault **DF068 Swirl flap control circuit**.
7	Sensor feed	**PR073:**	Air flowmeter feed voltage	**1 V < X < 3 V**	In the event of a fault, consult the interpretation of parameter **DF056 Air flow sensor circuit**.
		PR071:	Computer feed voltage	**9 V < X < 16 V**	In the event of a fault, test the battery and carry out a fault finding procedure on the charging circuit.
		PR215:	Sensor supply voltage no. 1	**4.9 V < X < 5.1 V**	
		PR216:	Sensor supply voltage no. 2	**4.9 V < X < 5.1 V**	

GETtheMANUALS.org

NOTES	Only check conformity after a full check with the **diagnostic tool**. The values shown in this conformity check are given as a guide. Execution conditions: **engine idling and warm, coolant temperature > 80˚C**.

STARTING

Order	Function	Parameter or Status Check or Action		Display and notes	Fault finding
1	Power supply	**ET001:**	Computer + after ignition feed	**PRESENT**	In the event of a fault, apply the interpretation of **DF046 Battery voltage** or **DF222 Main relay**.
		PR071:	Computer feed voltage	**9 V < X < 16 V**	In the event of a fault, test the battery and carry out a fault finding procedure on the charging circuit.
		PR215:	Sensor supply voltage no. 1	**4.9 V < X < 5.1 V**	
		PR216:	Sensor supply voltage no. 2	**4.9 V < X < 5.1 V**	
2	Engine immobiliser	**ET341:**	Immobiliser code programmed	**YES**	In the event of a fault, consult the fault finding procedure for the immobiliser.
		ET003:	Engine immobiliser	**INACTIVE**	
3	Synchronisation	**ET238:**	Synchronisation	**COMPLETED**	Any phase difference between the camshaft sensor and the TDC sensor (belt stretched or timing offset) will lead to the appearance of **DF195 Engine speed/camshaft sensor consistency**. If starting is impossible: during rotations with the starter on, the status becomes **IN PROGRESS** and will only change to **COMPLETED** if the engine starts.

GETtheMANUALS.org

NOTES	Only check conformity after a full check with the **diagnostic tool**. The values shown in this conformity check are given as a guide. Execution conditions: **engine idling and warm, coolant temperature > 80˚C**.

STARTING (Continued)

Order	Function	Parameter or Status Check or Action	Display and notes	Fault finding
4	Control	**ET010:** Low pressure pump relay control	Status: **ACTIVE**, as soon as the ignition is switched on. Becomes **INACTIVE**, as soon as the engine is running, or after a few seconds if starting fails (high pressure CP3 pump). --- **Status: ACTIVE**, as soon as the ignition is switched on if the engine is running. Becomes **INACTIVE** after a few seconds if starting fails (CP1 high pressure pump).	In the event of a fault, consult the interpretation of **DF207 Low pressure pump relay circuit**.
		ET007: Pre-postheating control	**Status: ACTIVE** When the ignition is switched on and until pre/post-heating ends.	In the event of a fault, consult the interpretation of fault **DF017 Preheating unit control circuit**.
5		**ET120:** Pre-postheating signal	**Status: ABSENT** as soon as pre-postheating is completed	

GETtheMANUALS.org

NOTES	Only check conformity after a full check with the **diagnostic tool**. The values shown in this conformity check are given as a guide. Execution conditions: **engine idling and warm, coolant temperature > 80˚C**.

COLD LOOP

Order	Function	Parameter or Status Check or Action		Display and notes	Fault finding
1	Engine speed	**PR055:**	Engine speed	Indicates the engine's speed of rotation in rpm. **820 rpm ± 50**	In the event of a fault, refer to the interpretation of fault **DF195 Camshaft sensor/ engine speed consistency**.
2	Speed signal	**PR089:**	Vehicle speed	Indicates the vehicle speed in mph (km/h). This parameter is transmitted by the ABS computer. This signal is transmitted to the injection on the multiplex network.	In the event of a fault test the multiplex network. Check the ABS.
3	Coolant temperature	**PR064:**	Coolant temperature	Gives the coolant temperature in ˚C.	In the event of a fault, refer to the interpretation of **DF001 Coolant temperature sensor circuit**.
4	Driver control	**ET088:**	Compressor actuation request	**YES**	If the air conditioning is authorised or if the compressor is actuated, refer to the interpretation for **ET088** and **ET004**.
		ET004:	Air conditioning authorisation	**YES**	
5	Engine cooling	**ET143:**	Low-speed fan assembly relay control	**Engine running > 80˚C ACTIVE or ET088 = YES**	If the fan assemblies are supplied with the ignition on, the injection may be in defect mode. Carry out a system fault test and refer to the interpretation of any faults.
		ET144:	High-speed fan assembly relay control	**Engine running > 80˚C INACTIVE**	

GETtheMANUALS.org

NOTES	Only check conformity after a full check with the **diagnostic tool**. The values shown in this conformity check are given as a guide. Execution conditions: **engine idling and warm, coolant temperature > 80˚C**.

HEATING

Order	Function	Parameter or Status Check or Action		Display and notes	Fault finding
1	Engine speed	**PR055:**	Engine speed	Indicates the engine's speed of rotation in rpm. **820 rpm ± 50**	In the event of a fault, refer to the interpretation of fault **DF195 Camshaft sensor/engine speed consistency**.
2	Coolant temperature	**PR064:**	Coolant temperature	Shows the engine coolant temperature in ˚C	In the event of a fault, refer to the interpretation of **DF001 Coolant temperature sensor circuit**.
3	Relay control	**ET205:**	Thermoplunger no. 1 relay control	**ACTIVE or INACTIVE.** Depending on the computer programming, air and coolant temperatures.	None.
		ET206:	Thermoplunger no. 2 relay control		
		ET207:	Thermoplunger no. 3 relay control		

GETtheMANUALS.org

NOTES	Only check conformity after a full check with the **diagnostic tool**. The values shown in this conformity check are given as a guide. Execution conditions: **engine idling and warm, coolant temperature > 80˚C**.

FUEL CIRCUIT

Order	Function	Parameter or Status Check or Action		Display and notes	Fault finding
1	Engine speed	**PR055:**	Engine speed	Indicates the engine's speed of rotation in rpm. **820 rpm ± 50**	In the event of a fault, refer to the interpretation of fault **DF195 Camshaft sensor/engine speed consistency**.
2	Injection configuration	**ET104:**	Injector code use	**YES**	In the event of a fault, consult the interpretation of **DF276 Injector code programming**.
3	Temperature	**PR063:**	Fuel temperature	**Indicates the fuel temperature** **Default value: 60˚C**	In the event of a fault, consult the interpretation of **DF098 Fuel temperature sensor circuit**.
4	Pressure	**PR008:**	Rail reference pressure	**Indicates the theoretical pressure value for optimum engine operation** **230 bar < X < 330 bar**	In the event of a fault, consult the interpretation of fault **DF208 Fuel pressure solenoid valve circuit.**
		PR038:	Rail pressure	**230 bar < X < 330 bar** **Default value: 250 bar.**	If the engine has just been stopped, wait a few seconds to obtain this value.
		PR213:	Rail pressure loop difference	**X = PR008 - PR038**	
5	Flow	**PR203:**	Fuel flow setpoint at idle speed	**4 < X < 10 mm^3/stroke**	None.
		PR017:	Fuel flow	**4 < X < 20 mm^3/stroke**	None.
		PR302:	Regulated fuel flow	**700 < X < 1800 mm^3/s**	None.

GETtheMANUALS.org

NOTES	Only check conformity after a full check with the **diagnostic tool**. The values shown in this conformity check are given as a guide. Execution conditions: **engine idling and warm, coolant temperature > 80˚C**.

FUEL CIRCUIT (continued)

Order	Function	Parameter or Status Check or Action		Display and notes	Fault finding
6	Power supply	**PR071:**	Computer feed voltage	**9 V < X < 16 V**	In the event of a fault, test the battery and carry out a fault finding procedure on the charging circuit.
7	Flow correction	**PR364:**	Cylinder no. 1 fuel flow correction	**- 1 mm^3 /cp < X < 1 mm^3 / stroke**	In the event of a fault, consult **test 10 Poor injector operation**.
		PR405:	Cylinder no. 2 fuel flow correction		
		PR406:	Cylinder no. 3 fuel flow correction		
		PR365:	Cylinder no. 4 fuel flow correction		
8	Control	**ET010:**	Low pressure pump relay control	Status: **ACTIVE**, as soon as the ignition is switched on. Becomes **INACTIVE**, as soon as the engine is running, or after a few seconds if starting fails (high pressure CP3 pump). **Status: ACTIVE**, as soon as the ignition is switched on if the engine is running. Becomes **INACTIVE** after a few seconds if starting fails (CP1 high pressure pump).	In the event of a fault, consult the interpretation of **DF207 Low pressure pump relay circuit**.

GETtheMANUALS.org

NOTES	Only check conformity after a full check with the **diagnostic tool**. The values shown in this conformity check are given as a guide. Execution conditions: **engine idling and warm, coolant temperature > 80˚C**.

EMISSION CONTROL/OBD

Order	Function	Parameter or Status Check or Action		Display and notes	Fault finding
1	Engine speed	**PR055:**	Engine speed	Indicates the engine's speed of rotation in rpm. **820 rpm ± 50**	In the event of a fault, refer to the interpretation of fault **DF195 Camshaft sensor/engine speed consistency**.
2	Exhaust gas recirculation	**PR220:**	EGR valve OCR	**X = 5% or 40% ± 5** (depending on programming).	In the event of a fault, go to the fault finding for the **AC036 EGR valve** command.
		PR022:	EGR valve position loop difference	**0 < X < 5 mV** (depending on programming).	
		PR051:	EGR valve position feedback	**0.75 < X < 1.5 V** (depending on programming).	
		ET272:	First EGR offset programming	**COMPLETED**	
		PR128:	First EGR valve offset	**0.75 < X < 1.5 V**	
		PR129:	Last EGR valve offset	**0.75 < X < 1.5 V**	
3	Flow	**PR132:**	Air flow	**20 < X < 60 kg/h**	In the event of a fault, consult the interpretation of parameter **DF056 Air flow sensor circuit**.

GETtheMANUALS.org

NOTES	Only check conformity after a full check with the **diagnostic tool**. The values shown in this conformity check are given as examples. Execution conditions: **engine idling and warm, coolant temperature > 80˚C**.

DRIVER PARAMETERS

Order	Function	Parameter or Status Check or Action		Display and notes	Fault finding
1	Engine speed	**PR055:**	Engine speed	Gives the engine's rotational speed in rpm. **820 rpm ± 50**	In the event of a fault, refer to the interpretation of fault **DF195 Camshaft sensor/engine speed consistency**.
		PR190:	Engine speed setpoint	**820 rpm ± 50**	According to the increase or decrease in the diagnostic tool's **Configuration** menu.
2	Accelerator pedal sensor	**ACCELERATOR PEDAL NO LOAD**			
		PR147:	Pedal potentiometer voltage gang 1	**X = 0.75 V ± 0.09**	**IMPORTANT** Approximately every **5 seconds** the computer performs a test to set **PR218** at **0 V**. This corresponds to normal operation.
		PR030:	Accelerator pedal position	**X = 0%**	
		PR217:	Pedal load (gang no. 1)	**X = 0%**	
		PR218:	Pedal load (gang no. 2)	**X = 0%**	
		PR148:	Pedal potentiometer voltage gang 2	**X = 0.37 V ± 0.05**	
3	Brake pedal position	**ET122:**	Brake contact no. 1 signal	Brake pedal released **ABSENT**	Nonconformity of the brake signals and or the clutch switch signals can cause "engine racing" during gear changes.
		ET123:	Brake switch no. 2 signal	Brake pedal released **ABSENT**	
4	Clutch pedal position	**ET233:**	Clutch pedal	Clutch pedal released **RELEASED**	

GETtheMANUALS.org

NOTES	Only check conformity after a full check with the **diagnostic tool**. The values shown in this conformity check are given as examples. Execution conditions: **engine idling and warm, coolant temperature > 80˚C**.

CRUISE CONTROL/SPEED LIMITER

Order	Function	Parameter or Status Check or Action		Display and notes	Fault finding
1	Cruise control/ Speed limiter	**PR089:**	Vehicle speed	Gives the vehicle speed in mph. This parameter is transmitted by the ABS computer. This signal is transmitted to the injection on the multiplex network.	In the event of a fault, test the multiplex network. Check the ABS.
		PR130:	Cruise control setpoint	Indicates the cruise control cruising speed.	Cruise control can only be activated for a speed V > 18 mph (30 km/h).
		ET042:	Cruise control/ speed limiter	**INACTIVE:** when no button is pressed.	In the event of a fault, refer to the interpretation of status **ET042**.
				CRUISE CONTROL: cruise control ON/OFF button pressed	Lights the green warning light on the instrument panel.
				SPEED LIMITER: speed limiter ON/OFF button pressed	Lights the orange warning light on the instrument panel.
		ET413:	Cruise control/ speed limiter function	**INACTIVE:** when no button is pressed.	In the event of a fault, refer to the interpretation of statuses **ET042 Cruise control/Speed limiter, ET413 Cruise control/ Speed limiter function** and **ET415 Deactivation of Cruise control/Speed limiter**.
				INCREASE: increase button pressed	
				DECREASE: decrease button pressed	
				CANCEL: "0" button pressed	
				REPEAT: R button pressed	

GETtheMANUALS.org

NOTES	Only check conformity after a full check with the **diagnostic tool**. The values shown in this conformity check are given as examples. Execution conditions: **engine idling and warm, coolant temperature > 80˚C**.

CRUISE CONTROL/SPEED LIMITER (CONTINUED 1)

Order	Function	Parameter or Status Check or Action		Display and notes	Fault finding
1	Cruise control/ speed limiter (continued)	**ET415:**	Deactivation of cruise control/ speed limiter Note: Cruise control can only be activated for a speed V > 18 mph (30 km/h)	**INACTIVE:** when no button is pressed.	The cruise control and speed limiter functions can be deactivated by various events. **IMPORTANT** Certain deactivations are stored; to reinitialise this status use **RZ007 Fault memory** In the event of a fault, refer to the interpretation of statuses **ET042 Cruise control/Speed limiter, ET413 Cruise control/ Speed limiter function** and **ET415 Deactivation of Cruise control/ Speed limiter**.
				STATUS 1: vehicle speed not updated.	
				STATUS 2: vehicle speed invalid.	
				STATUS 3: cruise control or speed limiter fault.	
				STATUS 4: inconsistency between the request and the vehicle speed.	
				STATUS 5: fault detected by injection computer	
				STATUS 6: gear selector lever in neutral	
				STATUS 7: disconnection of engine/gearbox	
				STATUS 8: traction control request.	
				STATUS 9: brake pedal depressed.	
				STATUS 10: suspend button pressed	

GETtheMANUALS.org

NOTES	Only check conformity after a full check with the **diagnostic tool**. The values shown in this conformity check are given as examples. Execution conditions: **engine idling and warm, coolant temperature > 80˚C**.

CRUISE CONTROL/SPEED LIMITER (continued 2)

Order	Function	Parameter or Status Check or Action		Display and notes	Fault finding
2		**PR178:**	Cruise control switch voltage	**X = 4.9 V ± 0.2** switches in rest position X = **0.2 ± 0.2 V** **O** pressed X = **3.7 ± 0.2 V** **R** pressed X = **2.4 ± 0.2 V** if **+** pressed X = **1.3 ± 0.2 V** if **-** pressed	None.
3	Brake pedal position	**ET122:**	Brake contact no. 1 signal	Brake pedal released **ABSENT**	Nonconformity of the brake signals and or the clutch switch signals can cause "engine racing" during gear changes.
		ET123:	Brake switch no. 2 signal	Brake pedal released **ABSENT**	
4	Clutch pedal position	**ET233:**	Clutch pedal	Clutch pedal released **RELEASED**	

GETtheMANUALS.org

NOTES	Only check conformity after a full check with the **diagnostic tool**. The values shown in this conformity check are given as examples. Execution conditions: **engine idling and warm, coolant temperature > 80˚C**.

ENGINE COOLING

Order	Function	Parameter or Status Check or Action		Display and notes	Fault finding
1	Coolant temperature	**PR064:**	Coolant temperature	Shows the engine coolant temperature in ˚C	In the event of a fault, refer to the interpretation of **DF001 Coolant temperature sensor circuit**.
2	Fan assemblies	**ET143:**	Low speed fan assembly relay control	**Engine running > 80 ˚C INACTIVE**	If the fan assemblies are supplied with the ignition on, the injection system may be in defect mode. Carry out a system fault test and refer to the interpretation of any faults.
		ET144:	High-speed fan assembly relay control		
3	Sensor feed	**PR071:**	Computer feed voltage	**9 V < X < 16 V**	In the event of a fault, test the battery and carry out a fault finding procedure on the charging circuit.
		PR215:	Sensor supply voltage no. 1	**4.9 V < X < 5.1 V**	
		PR216:	Sensor supply voltage no. 2	**4.9 V < X < 5.1 V**	

GETtheMANUALS.org

NOTES	Only check conformity after a full check with the **diagnostic tool**. The values shown in this conformity check are given as examples. Execution conditions: **engine idling and warm, coolant temperature > 80˚C**.

IGNITION/PREHEATING

Order	Function	Parameter or Status Check or Action		Display and notes	Fault finding
1	Power supply	**ET001:**	Computer + after ignition feed	**PRESENT**	In the event of a fault, apply the interpretation of **DF046 Battery voltage** or **DF222 Main relay**.
2	Engine speed	**PR055:**	Engine speed	Gives the engine's rotational speed in rpm. **820 rpm ± 50**	In the event of a fault, refer to the interpretation of fault **DF195 Camshaft sensor/engine speed consistency**.
3	Temperature	**PR058:**	Air temperature	Shows the inlet air temperature	In the event of a fault, consult the interpretation of fault **DF002 Air temperature sensor circuit**.
		PR064:	Coolant temperature	Gives the coolant temperature in ˚C.	In the event of a fault, refer to the interpretation of **DF001 Coolant temperature sensor circuit**.
4	Preheating	**ET007:**	Preheating unit control	**INACTIVE**	In the event of a fault, (**ET007** locked in **ACTIVE**), refer to the interpretation of fault **DF017 Preheating unit control circuit**.
		ET120:	Pre-postheating signal	**ABSENT**	
5	Sensor feed	**PR071:**	Computer feed voltage	**9 V < X < 16 V**	In the event of a fault, test the battery and carry out a fault finding procedure on the charging circuit.

GETtheMANUALS.org

Tool status	Diagnostic tool title
ET001	+ After ignition computer feed
ET003	Engine immobiliser
ET004	Air conditioning authorisation
ET007	Pre-postheating control
ET010	Low pressure pump relay control
ET042	Cruise control/speed limiter
ET088	Compressor actuation request
ET104	Injector code use
ET120	Pre-postheating signal
ET122	Brake switch no. 1 signal
ET123	Brake switch no. 2 signal
ET143	Low speed motor-driven fan assembly relay control
ET144	High speed motor-driven fan assembly relay control
ET205	Thermoplunger no. 1 relay control
ET206	Thermoplunger no. 2 relay control
ET207	Thermoplunger no. 3 relay control
ET211	Swirl flap control
ET212	Damper valve control
ET233	Clutch pedal
ET238	Synchronisation
ET272	First EGR offset programming
ET341	Immobiliser code programmed
ET413	Cruise control/speed limiterfunction
ET415	Deactivation of cruise control/speed limiter

GETtheMANUALS.org

ET001	COMPUTER + AFTER IGNITION FEED

"ABSENT"	***NOTES***	**Ignition on**

If the vehicle ignition is not switched on, the status **ET001** should be **ABSENT**.
As soon as the ignition is switched on, the computer should be supplied with power. Status **ET001** becomes **PRESENT**.
If this status remains locked on **ABSENT**, follow the procedure below:
– Check the condition of fuse **FM6** (**10A**) in the engine fuse and relay box.
– Check the continuity and for the absence of interference resistance between:

Black connector of the engine fuse and relay box **track 28** → Connector B brown **track E3** of the injection computer

Check the connections and the condition of the brown connector B contacts on the injection computer.
Repair if necessary.
If the fault is still present, contact the Techline.

"PRESENT"	***NOTES***	**Ignition on.**

Normal operating condition.
The computer is correctly supplied after the ignition has been switched on.

AFTER REPAIR	Deal with any other faults. Clear the fault memory. Switch off the ignition and carry out a road test followed by a check with the diagnostic tool.

GETtheMANUALS.org

ET003	ENGINE IMMOBILISER

"ACTIVE"	Refer to the UCH fault finding procedure (**see 87B Passenger compartment connection unit**).
"INACTIVE"	Refer to the UCH fault finding procedure (**see 87B Passenger compartment connection unit**).

AFTER REPAIR	Deal with any other faults. Clear the fault memory. Switch off the ignition and carry out a road test followed by a check with the diagnostic tool.

GETtheMANUALS.org

ET004	AC AUTHORISED

"NO"	Status **ET004** should be **NO** when the climate control control button is not pressed. If this status remains **NO** despite the button being pressed, perform the following operations: Check **the continuity and absence of interference resistance** between: Injection computer grey connector **A**, **track G4** → Blue connector of the air conditioning control panel **track 5** If the fault is still present, refer to the fault finding note for climate control (**see 62B Climate control**).
"YES"	Status **ET004** is used to interpret a request for air conditioning. When the climate control button is pressed, status **ET004** changes to **YES**. If this does not happen, perform the following operations: Check the continuity and absence of interference resistance between: Injection computer grey connector **A**, **track G4** → Air conditioning control panel blue connector **track 5** If the fault is still present, refer to the fault finding note for climate control (**see 62B Climate control**).
NONE	If the vehicle is not fitted with air conditioning, status **ET004** will always remain **NONE**.

AFTER REPAIR	Deal with any other faults. Clear the fault memory. Switch off the ignition and carry out a road test followed by a check with the diagnostic tool.

GETtheMANUALS.org

ET007	PRE-POSTHEATING UNIT CONTROL

"ACTIVE"	When the ignition is switched on, status **ET007** should be **ACTIVE** for a time that varies according to the engine coolant temperature. Both the relay and the heater plugs are then supplied. After starting the status should remain **ACTIVE** for a variable period according to the engine coolant temperature. This is called postheating. If the vehicle starts, postheating is completed and status **ET007** remains **ACTIVE** during the engine operating phase, refer to the interpretation of faults **DF017 Preheating unit control circuit** and **DF186 Heater plugs circuit**.
"INACTIVE"	If the vehicle does not start or the status remains **INACTIVE** and preheating has not been carried out when switching on the ignition or during the starting phase, check the following connections: Injection computer **track B3 brown connector B** → **track 9** preheating unit Injection computer **track C3 brown connector B** → **Track 8** preheating unit Repair if necessary.

AFTER REPAIR	Deal with any other faults. Clear the fault memory. Switch off the ignition and carry out a road test followed by a check with the diagnostic tool.

GETtheMANUALS.org

ET010	LOW PRESSURE PUMP RELAY CONTROL

"ACTIVE"	Status **ET010** must be **ACTIVE** when the injection computer activates the fuel pump relay. When the ignition is switched on, status **ET010** must be **ACTIVE**.

"INACTIVE"	Status **ET010** must be **INACTIVE** when the injection computer does not actuate the fuel pump relay. If when the ignition is switched on, status **ET010** remains **INACTIVE**, check the continuity and absence of interference resistance between: Injection computer black connector **C**, **track A1** → Fuel pump relay mounting **track B2** If the fault is still present, consult the interpretation of fault **DF207 Low pressure pump relay circuit**.

AFTER REPAIR	Deal with any other faults. Clear the fault memory. Switch off the ignition and carry out a road test followed by a check with the diagnostic tool.

GETtheMANUALS.org

ET042	CRUISE CONTROL/SPEED LIMITER

LIMITER	Status **ET042** should display **LIMITING** when the Cruise control/Speed limiter button is set to the limiter position.
CRUISE CONTROL	Status **ET042** should display **CRUISE CONTROL** when the Cruise control/Speed limiter button is set to the cruise control position.

The Cruise control/Speed limiter button has 3 positions: speed limiter, cruise control and standby.

If the status is not working, apply the interpretation of fault **DF234 Cruise control/Speed limiter function**.

AFTER REPAIR	Deal with any other faults. Clear the fault memory. Switch off the ignition and carry out a road test followed by a check with the diagnostic tool.

GETtheMANUALS.org

ET088	REQUEST TO START COMPRESSOR

"YES"	The status **ET088** is used to interpret a request for air conditioning. If the air conditioning button is pressed, status **ET088** changes to **YES**. If this does not happen, perform the following operations: Check the continuity and absence of interference resistance between: Injection computer **connector A track D3** → **Track 5** of the blue connector of the air conditioning control panel If the fault is still present, refer to the note regarding air conditioning.
"NO"	Status **ET088** should be **NO** when the air conditioning control button is not pressed. If this status remains **NO** despite the button being pressed, perform the following operations: Check **the continuity and absence of interference resistance** between: Injection computer **connector A track D3** → **Track 5** of the blue connector of the air conditioning control panel If the fault is still present, refer to the note regarding air conditioning.
NONE	If the vehicle is not fitted with air conditioning, status **ET088** will always remain **WITHOUT**.

AFTER REPAIR	Deal with any other faults. Clear the fault memory. Switch off the ignition and carry out a road test followed by a check with the diagnostic tool.

GETtheMANUALS.org

ET104	INJECTOR CODE USE

"YES"	Status **ET104** should display **YES** when the injector codes have been entered.
"NO"	Status **ET104** should display **NO** when the injector codes have not been entered. In this case, the engine management computer uses prespecified values in its memory to control the injectors.

Check for any faults using the interpretation of fault **DF374 Computer**.

AFTER REPAIR	Deal with any other faults. Clear the fault memory. Switch off the ignition and carry out a road test followed by a check with the diagnostic tool.

GETtheMANUALS.org

ET120	PRE-POSTHEATING SIGNAL

NOTES	Check the battery voltage.

ABSENT	Status **ET120** is **ABSENT** as soon as pre/postheating has ended. If status **ET120** continuously remains **PRESENT**, refer to fault **DF017 Preheating unit control circuit**.
PRESENT	Status **ET120** is **PRESENT** until pre/postheating ends.

AFTER REPAIR	Deal with any other faults. Clear the fault memory. Switch off the ignition and carry out a road test followed by a check with the diagnostic tool.

GETtheMANUALS.org

ET122	BRAKE CONTACT SIGNAL No. 1

PRESENT

When the driver depresses the brake pedal, status **ET122 Brake contact signal no. 1** must change to **PRESENT** and status **ET123 Brake contact signal no. 2** must change to **PRESENT**.
If the driver depresses the brake pedal fully and status **ET122** remains **ABSENT**, check that the brake lights at the rear of the vehicle have come on.
Check the condition of the brake light switch contacts and connections.
If the brake lights are working, check the continuity and absence of interference resistance between:

connector A track F3, Engine management computer → **track 3** brake pedal switch connector

Repair if necessary.
If the brake lights are not working:
– Check the condition of the bulbs, replace if necessary.
– Check the condition of the fuse (15 A or 20 A) in the passenger compartment relay and fuse box.
– Check for **+ 12 V** after ignition on track 2 and 4 of the switch.
– Then remove the brake light switch and carry out the checks in the following table:

	Continuity between tracks	**Insulation between tracks**
Switch pressed (Brake pedal released)	**4 and 3**	**1 and 2**
Switch released (Brake pedal depressed)	**1 and 2**	**4 and 3**

If these checks are not in order, replace the brake light switch.

ABSENT

When the driver releases the brake pedal, the status **ET122** must change to **ABSENT** and status **ET123** must change to **ABSENT**.
If this is not the case, check the condition and proper functioning of the brake light switch by performing the checks for the **PRESENT** part.

AFTER REPAIR	Deal with any other faults. Clear the fault memory. Switch off the ignition and carry out a road test followed by a check with the diagnostic tool.

GETtheMANUALS.org

ET123	BRAKE CONTACT No. 2 SIGNAL

PRESENT

When the driver depresses the brake pedal, status **ET122 Brake contact signal no. 1** must change to **PRESENT** and status **ET123 Brake contact signal no. 2** must change to **PRESENT**.
If the driver depresses the brake pedal firmly and status **ET123** remains **ABSENT**, check the illumination of the brake lights at the rear of the vehicle.
Check the condition of the brake light switch contacts and connections.
If the brake lights are working, check the continuity and the absence of interference resistance between:

connector A track F3, Engine management computer → **track 3** brake pedal switch connector

Repair if necessary.
If the brake lights are not working:
– Check the condition of the bulbs, replace if necessary.
– Check the condition of the fuse (15 A or 20 A) in the passenger compartment relay and fuse box.
– Check for **+ 12 V** after ignition on track 2 and 4 of the switch.
– Then remove the brake light switch and carry out the checks in the following table:

	Continuity between tracks	**Insulation between tracks**
Switch pressed (Brake pedal released)	**4 and 3**	**1 and 2**
Switch released (Brake pedal depressed)	**1 and 2**	**4 and 3**

If these checks are not in order, replace the brake light switch.

ABSENT

When the driver depresses the brake pedal, status **ET122 Brake contact signal no. 1** must change to **ABSENT** and status **ET123 Brake contact signal no. 2** must change to **ABSENT**.
If this is not the case, check the condition and correct operation of the brake light switch by carrying out the checks associated with **PRESENT** in the interpretation of **ET122**.

Note:
Status **ET122 Brake contact signal no. 1** must change to **ABSENT** if status **ET123 Brake contact signal no. 2** is **ABSENT**, these statuses are directly linked.
If this is not the case, carry out the above fault finding procedure.

AFTER REPAIR	Deal with any other faults. Clear the fault memory. Switch off the ignition and carry out a road test followed by a check with the diagnostic tool.

GETtheMANUALS.org

ET143	LOW-SPEED FAN ASSEMBLY RELAY CONTROL

NOTES	If the vehicle is fitted with air conditioning, the fan assembly electrical circuit includes **2 relays**. The low speed fan assembly relay will be run when the engine coolant temperature exceeds **99˚C** and will cool the engine as long as the engine coolant temperature does not exceed **102˚C**. If the temperature of the engine coolant exceeds **102˚C**, the high speed fan assembly relay will be run and the engine cooling fan will turn more quickly.

WARNING
If the vehicle is equipped with air conditioning, the engine cooling fan will run at low speed as soon as the computer actuates the air conditioning compressor.

"ACTIVE"	When the coolant reaches **99˚C**, the injection computer actuates the low speed fan assembly relay, and status **ET143** becomes **ACTIVE**. The relay then supplies the fan assembly and the cooling fan switches on. If status **ET143** is **ACTIVE**, but the cooling fan is not running, perform the following operations: – Check the condition of fuse **F2** (30 A) in the engine relay/fuse box. – Next, check for continuity and the absence of interference resistance between: Low-speed relay mounting **track 9** → **track 1** of the fan assembly resistor connector **track 2** of the cooling fan assembly resistance connector → **track 2** of the engine cooling fan black 2 track connector

AFTER REPAIR	Deal with any other faults. Clear the fault memory. Switch off the ignition and carry out a road test followed by a check with the diagnostic tool.

GETtheMANUALS.org

ET143 **CONTINUED**	

"ACTIVE"	– Disconnect the low-speed and high-speed relays, check their operation and the condition of the connections. – Repair if necessary. – Check for **+ 12 V** on terminal 12 of the low-speed relay mounting while it is active. – Disconnect the black 2-track connector of the engine cooling fan and check the condition of the connections. – Repair if necessary. – Next, check **the continuity and absence of interference resistance** between: Injection computer connector **C track A2** → **track 11** of the fan assembly relay mounting **track 9** relay mounting → **track 1** of the fan assembly resistor connector **vehicle** earth → **track 1** of the 2-track black connector for the engine cooling fan
"INACTIVE"	If the engine temperature is lower than **99˚C**, the engine cooling fan must not switch on and the low speed fan assembly relay must not be run. Status **ET143** must therefore be **INACTIVE** when the control relay and the engine cooling fan are not supplied.

AFTER REPAIR	Deal with any other faults. Clear the fault memory. Switch off the ignition and carry out a road test followed by a check with the diagnostic tool.

GETtheMANUALS.org

ET144	HIGH-SPEED FAN ASSEMBLY RELAY CONTROL

NOTES	If the vehicle is not fitted with air conditioning, there is no low-speed fan assembly relay. The circuit therefore only contains a single control relay to supply the engine cooling fan. The engine cooling fan will thus have only one operating speed.

Vehicle without air conditioning

"ACTIVE"	When the coolant reaches **102˚C**, the injection computer actuates the fan assembly relay, and status **ET144** becomes **ACTIVE**. The relay then supplies the cooling fan. If status **ET144** is **ACTIVE**, but the cooling fan is not running, perform the following operations: – Disconnect the fan assembly relay, check it is operating properly, and the condition of the connections. – Repair if necessary. – Check for **+ 12 V** on terminal 8 of the relay mounting while it is active. – Next, check **the continuity and absence of interference resistance** between: Injection computer **connector A track B4** → **track 7** of the fan assembly relay mounting **track 5** relay mounting → **track 2** of the engine cooling fan black 2 track connector **vehicle** earth → **track 1** of the 2-track black connector for the engine cooling fan
"INACTIVE"	When the cooling request is no longer executed by the injection computer, status **ET144** becomes **INACTIVE**. The fan assembly should then switch off.

AFTER REPAIR	Deal with any other faults. Clear the fault memory. Switch off the ignition and carry out a road test followed by a check with the diagnostic tool.

GETtheMANUALS.org

ET144 **CONTINUED**	

Vehicle with air conditioning

"ACTIVE"	When the coolant reaches a temperature of **102 ˚C**, the injection computer commands the high speed relay, and status **ET144** becomes **ACTIVE**. The relay then supplies the cooling fan and this begins to turn. If status **ET144** is **ACTIVE**, but the cooling fan is not running, perform the following operations: Check the conformity of the fuses concerned (crimping and condition of the wires on the terminals): – Check for **+ 12 V** after ignition feed on terminal 1 or 8 of the high speed fan assembly relay mounting (**depending on the engine**). – Next, check **for continuity and the absence of interference resistance between**: Computer supply voltage relay mounting **track 13** → **track 6** of the high speed fan assembly relay mounting – Disconnect the high-speed fan assembly relay, check it is operating properly, and the condition of the connections. – Repair if necessary. – Next, check **for continuity and the absence of interference resistance between**: Injection computer **connector A track B4** → **Track 7** of the high speed fan assembly relay mounting relay mounting **track 5** → **track 2** of the engine cooling fan black 2 track connector **vehicle** earth → **track 1** of the 2-track black connector for the engine cooling fan
"INACTIVE"	When the cooling request is no longer executed by the injection computer, status **ET144** becomes **INACTIVE**. The engine cooling fan should then switch off.

AFTER REPAIR	Deal with any other faults. Clear the fault memory. Switch off the ignition and carry out a road test followed by a check with the diagnostic tool.

GETtheMANUALS.org

ET205	THERMOPLUNGER No.1 RELAY CONTROL

NOTES	Check the battery voltage.

"ACTIVE"	Status **ET205** displays **ACTIVE** when the computer controls thermoplunger no.1 relay. Refer to command **AC063 Thermoplunger no. 1 relay**.
"INACTIVE"	Status **ET205** displays **INACTIVE** when the thermoplunger no. 1 relay is not controlled. Refer to command **AC063 Thermoplunger no. 1 relay**.

AFTER REPAIR	Deal with any other faults. Clear the fault memory. Switch off the ignition and carry out a road test followed by a check with the diagnostic tool.

GETtheMANUALS.org

ET206	THERMOPLUNGER No.2 RELAY CONTROL

NOTES	Check the battery voltage.

"ACTIVE"	Status **ET206** displays **ACTIVE** when the computer controls thermoplunger no.2 relay. Refer to command **AC064 Thermoplunger no. 2 relay**.
"INACTIVE"	Status **ET206** displays **INACTIVE** when the thermoplunger no. 2 relay is not controlled. Refer to command **AC064 Thermoplunger no. 2 relay**.

AFTER REPAIR	Deal with any other faults. Clear the fault memory. Switch off the ignition and carry out a road test followed by a check with the diagnostic tool.

GETtheMANUALS.org

ET207	THERMOPLUNGER No. 3 RELAY CONTROL

NOTES	Check the battery voltage.

"ACTIVE"	Status **ET207** displays **ACTIVE** when the computer controls thermoplunger no.3 relay. Refer to command **AC031 Thermoplunger no. 3 relay**.
"INACTIVE"	Status **ET207** displays **INACTIVE** when the thermoplunger no. 3 relay is not controlled. Refer to command **AC031 Thermoplunger no. 3 relay**.

AFTER REPAIR	Deal with any other faults. Clear the fault memory. Switch off the ignition and carry out a road test followed by a check with the diagnostic tool.

GETtheMANUALS.org

ET211	SWIRL FLAP CONTROL

NOTES	Check the battery voltage. Ignition on and engine stopped.

"ACTIVE"	Status **ET211** displays **ACTIVE** when the computer controls the swirl flap. Refer to command **AC013 Swirl flap**.
"INACTIVE"	Status **ET211** displays **INACTIVE** when the swirl flap is not controlled. Refer to command **AC013 Swirl flap**.

AFTER REPAIR	Deal with any other faults. Clear the fault memory. Switch off the ignition and carry out a road test followed by a check with the diagnostic tool.

GETtheMANUALS.org

ET212	DAMPER VALVE CONTROL

NOTES	Check the battery voltage.

"ACTIVE"	Status **ET212** displays **ACTIVE** when the computer controls the damper valve. Refer to command **AC067 Damper valve**.
"INACTIVE"	Status **ET212** displays **INACTIVE** when the damper valve is not controlled. Refer to command **AC067 Damper valve**.

AFTER REPAIR	Deal with any other faults. Clear the fault memory. Switch off the ignition and carry out a road test followed by a check with the diagnostic tool.

GETtheMANUALS.org

ET233	CLUTCH PEDAL

DEPRESSED	When the driver presses the clutch pedal, status **ET233 Clutch pedal** displays **DEPRESSED**.

RELEASED	When the driver is not pressing the clutch pedal, status **ET233 Clutch pedal** displays **RELEASED**. If **RELEASED** appears despite an action on the clutch pedal, perform the following operations: – Disconnect the clutch pedal switch, check the insulation between **tracks 1 and 2** in the pedal released position. – Repeat this operation with the pedal depressed, and check the continuity between the 2 tracks. If these 2 checks are not in order, replace the switch. Next, check for continuity and the absence of interference resistance between: **track 1** clutch pedal switch connector → **track E2** of grey **connector A** of the injection computer **track 2** of the clutch pedal switch → vehicle earth Also check: The condition of the contacts of the blue pedal/dashboard connectors on **track 1** and **2**. The condition of the contacts of the black engine/dashboard connectors in **track 4**

NONE	When the vehicle is fitted with an automatic transmission or a sequential gearbox, status **ET233 Clutch pedal** displays **NONE**.

AFTER REPAIR	Deal with any other faults. Clear the fault memory. Switch off the ignition and carry out a road test followed by a check with the diagnostic tool.

GETtheMANUALS.org

ET238	SYNCHRONISATION

Synchronisation is carried out during the engine starting phase. It is established between the camshaft position sensor and the TDC sensor. This synchronisation, once performed, allows the computer to identify cylinder no. 1, and to recognise the exact position of the top dead centre of this cylinder.
Synchronisation also allows the computer to determine the injection programming.

STANDBY	Status **ET238** is **STANDBY** when the engine is stopped with + after ignition feed.
IN PROGRESS	Status **ET238** is **IN PROGRESS** when the engine is in the starting phase. When the computer is synchronising, it receives and interprets signals from the camshaft and crankshaft position sensors. If status **ET238** remains **IN PROGRESS** after an attempt at starting, refer to the interpretation of fault **DF195 Camshaft/engine speed consistency**.
PERFORMED	Status **ET238** is **DONE** when the engine is started. The computer has identified the cylinder no. 1 and has identified the exact top dead centre position. Injection phasing is now possible, and the engine should be working properly.

AFTER REPAIR	Deal with any other faults. Clear the fault memory. Switch off the ignition and carry out a road test followed by a check with the diagnostic tool.

GETtheMANUALS.org

ET272	FIRST EGR OFFSET PROGRAMMING

NOTES	Check the battery voltage.

PERFORMED	Status **ET272** displays **COMPLETED** when the computer has reinitialised the EGR valve after being replaced and the power-latch* phase.
NOT COMPLETED	Status **ET272** displays **NOT COMPLETED** when the computer has not yet reinitialised the position of the EGR valve after the valve replacement and command **RZ002 EGR adaptives**.

* The immobiliser warning light will flash a few seconds after switching the ignition off.

AFTER REPAIR	Deal with any other faults. Clear the fault memory. Switch off the ignition and carry out a road test followed by a check with the diagnostic tool.

GETtheMANUALS.org

ET341	IMMOBILISER CODE PROGRAMMED

"YES"	Status **ET341** is **YES** if dialogue is possible between the UCH computer and the injection computer and the key code is recognised. The engine is only authorised to start if the code is recognised by the UCH computer and if status **ET003 Immobiliser** is **INACTIVE**.
"NO"	Status **ET341** is **NO** if dialogue is not possible between the UCH computer and the injection computer (status **ET003 Immobiliser** remains **ACTIVE**). This fault may be caused by incorrect key programming or key programming not having been performed. In that case, refer to the fault finding note for the UCH and follow the key programming procedure. If the key programming is not the cause, test the multiplex network and check that the dialogue between the UCH and the injection computer is possible. If dialogue is not established, contact the Techline.

AFTER REPAIR	Deal with any other faults. Clear the fault memory. Switch off the ignition and carry out a road test followed by a check with the diagnostic tool.

GETtheMANUALS.org

ET413	CRUISE CONTROL/SPEED LIMITER FUNCTION

NOTES	Cruise control remains deactivated as long as the vehicle does not exceed a vehicle speed **>18 mph (30 km/h)**.

"PLUS"	Status **ET413** displays **INCREASE** when the driver presses **+** located on the steering wheel spoke.
"MINUS"	Status **ET413** displays **DECREASE** when the driver presses **-** located on the steering wheel spoke.
"SUSPEND"	Status **ET413** displays **CANCEL** when the driver presses the cruise control or speed limiter stop switch.
"REACTIVATE"	Status **ET413** displays **RESUME** when the driver presses the cruise control or speed limiter resume switch.

AFTER REPAIR	Deal with any other faults. Clear the fault memory. Switch off the ignition and carry out a road test followed by a check with the diagnostic tool.

GETtheMANUALS.org

ET415	CRUISE CONTROL/SPEED LIMITER DEACTIVATION

NOTES	Status **ET415 Cruise control/Speed limiter deactivation** is directly linked to status **ET413 Cruise control/Speed limiter function** and status **ET042 Cruise control/ Speed limiter** Cruise control remains deactivated as long as the vehicle does not exceed a speed **>18 mph (30 km/h)**.

NONE	**The vehicle diagnosed is not fitted with cruise control.**
STATUS 1	**VEHICLE SPEED NOT REFRESHED**
	If the ABS computer stops sending a signal to the injection computer, the vehicle speed will be unknown. The cruise control will therefore be inactive and status **ET415** will remain **STATUS 1**.
STATUS 2	**INVALID VEHICLE SPEED**
	As long as the vehicle has not exceeded a speed of >18 mph (30 km/h), status **ET415** remains **STATUS 2**.
STATUS 3	**CRUISE CONTROL OR SPEED LIMITER FAULT**
	As soon as the cruise control or speed limiter suffers an electrical fault, the injection computer switches status **ET415** to **STATUS 3**.
STATUS 4	**INCONSISTENCY BETWEEN REQUEST AND VEHICLE SPEED**
	When the speed requested by the driver does not match the actual speed of the vehicle, the injection computer switches status **ET415** to **STATUS 4**.

AFTER REPAIR	Deal with any other faults. Clear the fault memory. Switch off the ignition and carry out a road test followed by a check with the diagnostic tool.

GETtheMANUALS.org

ET415 **CONTINUED 1**	

STATUS 5	**FAULT DETECTED BY THE INJECTION COMPUTER**

As soon as a fault is detected by the injection computer, status **ET415** changes to **STATUS 5**.
- Faults on the accelerator pedal.
- Faults in the engine speed sensor or camshaft.
- Engine speed above 4700 rpm.
- Engine speed less than 1000 rpm.
- Carry out a multiplex network test, then an injection system test, and carry out fault finding on any faults.

If the fault is still present, contact the Techline.

STATUS 6	**GEAR LEVER IN NEUTRAL POSITION**

When the gear lever in neutral signal is registered by the injection computer, it changes status **ET415** to **STATUS 6**.

STATUS 7	**DISCONNECTION OF THE ENGINE/GEARBOX**

When the driver presses the clutch pedal, the injection computer switches status **ET415** to **STATUS 7**.

STATUS 8	**TRACTION CONTROL REQUEST**

When the ABS or ESP computer requests traction control, status **ET415** becomes **STATUS 8**.

AFTER REPAIR	Deal with any other faults. Clear the fault memory. Switch off the ignition and carry out a road test followed by a check with the diagnostic tool.

GETtheMANUALS.org

ET415 **CONTINUED 2**	

STATUS 9	**BRAKE PEDAL DEPRESSED**
	As soon as the driver presses the brake pedal, the braking request is made and is sent via the ABS system computer. This signal deactivates the cruise control and status **ET415** becomes **STATUS 9**.
STATUS 10	**SUSPEND BUTTON PRESSED**
	When the driver presses the cruise control OFF switch, the injection computer changes status **ET415** to **STATUS 10**.

AFTER REPAIR	Deal with any other faults. Clear the fault memory. Switch off the ignition and carry out a road test followed by a check with the diagnostic tool.

GETtheMANUALS.org

Tool parameter	Diagnostic tool title
PR008	Rail reference pressure
PR009	Turbocharging pressure setpoint
PR014	Idle speed correction
PR017	Fuel flow
PR022	EGR valve position feedback loop difference
PR030	Accelerator pedal position
PR035	Atmospheric pressure
PR038	Rail pressure
PR041	Turbocharging pressure
PR047	Turbocharging pressure OCR
PR048	Rail pressure regulation valve OCR
PR051	EGR valve position feedback
PR055	Engine speed
PR058	Air temperature
PR063	Fuel temperature
PR064	Coolant temperature
PR071	Computer feed voltage
PR073	Air flowmeter feed voltage
PR089	Vehicle speed
PR128	First EGR valve offset
PR129	Last EGR valve offset
PR130	Cruise control setpoint
PR132	Air flow
PR147	Pedal potentiometer voltage gang 1
PR148	Pedal potentiometer voltage gang 2
PR178	Cruise control switch voltage
PR190	Engine idle speed setpoint.

GETtheMANUALS.org

Tool parameter	Diagnostic tool title
PR203	Fuel flow setpoint at idle speed
PR209	Turbocharging pressure loop difference
PR213	Rail pressure loop difference
PR214	Air flow loop difference
PR215	Sensor supply voltage no. 1
PR216	Sensor supply voltage no. 2
PR217	Pedal load (gang 1)
PR218	Pedal load (gang 2)
PR220	EGR valve OCR
PR302	Regulated fuel flow
PR364	Cylinder no. 1 fuel flow correction
PR365	Cylinder no. 4 fuel flow correction
PR405	Cylinder no. 2 fuel flow correction
PR406	Cylinder no. 3 fuel flow correction

GETtheMANUALS.org

PR038	RAIL PRESSURE

NOTES	**There must be no present or stored faults**. Perform this fault finding procedure: – after an inconsistency appears on the parameter menu or, – following the execution of command **AC035 Fuel pressure solenoid valve** – after a customer complaint (starting faults, poor performance, stalling etc.).

ELECTRICAL CONFORMITY OF THE SENSOR:

Check for **continuity and absence of interference resistance** on the following connections:

Engine computer, **connector B track D1** → **track 2** rail pressure sensor connector

Engine computer, **connector B track H2** → **track 3** rail pressure sensor connector

Engine computer, **connector C track B3** → **track 1** of the rail pressure sensor connector

If all these connections are correct, check for a fuel pressure sensor supply:

+ 5 V → **track 3** of the rail pressure sensor connector

Earth → **track 1** of the rail pressure sensor connector

Check the low and high pressure diesel circuit sealing (visual checks, odours): on pump body, pressure release valve, pipes, rail and injector unions, injector wells, etc.
If all the above checks are correct:

– With the vehicle ignition on, and engine stopped for over **1 minute**:
  – Display **PR038**: if the value is **less** than **30 bar**, the sensor is correct.
  – if not replace the rail pressure sensor.

AFTER REPAIR	Repeat the conformity check from the start.

GETtheMANUALS.org

PR041	TURBOCHARGING PRESSURE

NOTES	Perform this fault finding procedure: – after an inconsistency appears on the parameter menu or, – following fault **DF199 Turbocharging pressure sensor** or, – after a customer complaint (lack of performance, smoke, etc.).

With the vehicle ignition on and engine stopped:
– Remove the turbocharger pressure sensor.
– Sensor connected to the harness, not the value of **PR041**:
– If the value is not very close to **PR035 Atmospheric pressure**, maximum pressure difference between **PR035** and **PR041 Turbocharging pressure**, with the engine stopped, = **(± 50 hPa) ± 50 mbar**:
Check **the insulation and absence of interference resistance** on the signal line and the turbocharging pressure sensor power supply lines.
If the lines are correct, replace the turbocharging pressure sensor.
– Connect **a vacuum pump** or **pressure pump** to the turbocharger pressure sensor.
– Apply a pressure between **0.1** and **1.3 bar** (maximum pressure to be applied: **1300 hPa** or **1.3 bar**).
– Compare the pressure value displayed in the Parameter screen with that given by your vacuum pump:
If the difference* = **± 100 hPa** (or **± 0.1 bar)**, replace the turbocharging pressure sensor.
If there is no discrepancy, the turbocharging pressure sensor is correct.
– Refit the sensor and its seal, then apply the interpretation of the command **AC004 Turbocharging solenoid valve**.
*Note:
The diagnostic tool displays the **absolute pressure**, the pressure gauge for your vacuum pump displays the ***relative pressure***: the standard difference between these two measures is equal to atmospheric pressure, that is, **the value of PR035 Atmospheric pressure**.

AFTER REPAIR	Repeat the conformity check from the start.

GETtheMANUALS.org

PR132	AIR FLOW

NOTES	**There must be no faults present.** Perform this fault finding procedure: – following detection of an inconsistency in the parameters menu, – or after a customer complaint (lack of power, smoke, etc.).

Check the air inlet circuit (from the air filter inlet to the inlet manifold tracts, run **test 4: Turbocharged air inlet circuit check**):
– air filter unit inlet not blocked and filter not clogged,
– **no** foreign bodies in the air flow sensor grille (**visual inspection only, apply test 5: Air flow sensor**),
– otherwise replace the flowmeter, check and clean the air filter,
– oil vapour recirculation circuit connected correctly,
– **no leaks** or **blockages** in the **low** and **high-pressure** air circuits: pipes, presence and tightness of the mounting clips, mounting of the turbocharger pressure sensor, intercooler, etc.
– check that the damper valve is open (**flap control rests on the body** of the air vent casing),
– check that the turbulence flap is in the rest position (**AC013 Turbulence flap**, step B), if fitted to the vehicle.
Carry out the necessary repairs.
Check the **electrical conformity of the air flow sensor feed**:

power circuit:**+ 12 V** → **track 4** and battery **earth** → **track 6**

sensor circuit: **+ 5 V** → **track 3** and computer **earth** → **track 2**

Check for **continuity, insulation and absence of interference resistance** on the connection between:

Engine management computer, **connector B** track H4 → **track 5** of the flow sensor connector

With the flow sensor **connected**, the vehicle **ignition on** and **engine stopped**:
– check the voltage between **tracks 2** and **5** of the flow sensor,
– If the value is not **0.6 V ± 0.1**, replace the flow sensor.
Check the exhaust gas recirculation valve operation:
Apply **test 9 Exhaust gas recirculation valve**, part A.

AFTER REPAIR	Repeat the conformity check from the start.

GETtheMANUALS.org

SUMMARY OF AVAILABLE COMMANDS

NOTES	The commands are run to check the correct operation of certain components or to replace parts.

Tool command	Diagnostic tool title
SC001	Write saved data
SC002	Enter injector codes
SC003	Save computer data
RZ002	EGR programming adaptives
RZ003	Engine adaptives
RZ007	Fault memory
AC004	Turbocharging solenoid valve
AC013	Swirl flap
AC031	Thermoplunger No. 3 relay
AC034	Low-pressure pump relay
AC035	Fuel pressure solenoid valve
AC036	EGR valve
AC037	Preheating relay
AC038	Low speed fan assembly relay
AC039	High speed fan assembly relay
AC063	Thermoplunger no. 1 relay
AC064	Thermoplunger no. 2 relay
AC067	Damper valve
VP007	Decrease idling speed
VP010	Write VIN
VP011	Increase idling speed

GETtheMANUALS.org

SC001	WRITE SAVED DATA

NOTES	To use this command, first save the data with the **SC003 Save computer data** command. Writing is carried out after the computer has been reprogrammed or replaced.

Select scenario **SC001 Write saved data** in the diagnostic tool.
Validating this command writes the data saved using command **SC003 Save computer data**.
The data is as follows:

- Vehicle-specific idling.
- Options available on the vehicle and generated by the computer (e.g.: air conditioning).
- Fast idle speed if Commercial Vehicle.

They will configure the computer and will enable it to avoid:

- engine malfunction after reprogramming or replacing the computer,
- faulty interpretation of information provided by the CLIP tool.

AFTER REPAIR	Deal with any other faults. Clear the fault memory. Switch off the ignition and carry out a road test followed by a check with the diagnostic tool.

GETtheMANUALS.org

SC002	ENTER INJECTOR CODES

NOTES	This command is carried out after the replacement of one or more injectors.

To enter this data, select command **SC002 Enter injector codes** on the fault finding tool.
Procedure to be followed:
– Make a note of the 6-character alphanumeric codes engraved on the upper section of the injector bodies.
– Enter each injector code for the associated cylinder.
– Confirm the change of injector code configuration.
– When the command is completed, the modified codes appear in the current column.
– Check that the codes correspond to those read earlier.
If the codes entered appear in neither the current column nor the desired column, check the codes read and make sure the data has been entered correctly.
– Exit fault finding mode.
– Switch off the ignition and **wait for the end of the power latch***.
– Switch the ignition back on and check for faults.
– The **DF276 Injector code programming** should be stored.
If the **DF276** fault is still present, the command has not been executed correctly.
Start the procedure again and follow the instructions.
If this is still not effective, follow the procedure below:
A fault could cause **DF276** to be raised again and also incorrect confirmation of command **SC002**.
If the power latch* is not performed after the ignition is switched off, the injection computer will not store the new injector codes.
This can occur if the electrical wiring has been altered: alarm or accessories fitted to the vehicle.
Then check if the power latch* was executed correctly:
Switch off the ignition and check that the immobiliser warning light flashes **2 seconds** after switching the ignition off.
If the warning light flashes as soon as the ignition is switched off, the power latch* has not been executed and the command will not have been recognised.
If all these checks still do not enable the command to be confirmed, contact the Techline.

* The immobiliser warning light will flash a few seconds after switching the ignition off.

AFTER REPAIR	Deal with any other faults. Clear the fault memory. Switch off the ignition and carry out a road test followed by a check with the diagnostic tool.

GETtheMANUALS.org

SC003	SAVE COMPUTER DATA

NOTES	This save is performed before reprogramming or replacing the computer.

Select scenario **SC003 Save computer data** in the diagnostic tool.
Confirming this command saves the following vehicle-specific data:
- Vehicle-specific idling.
- Computer managed options available on the vehicle (e.g. air conditioning).
- Fast idle speed if Commercial Vehicle.

This information will be saved in the diagnostic tool.
Once the save is completed, use the **SC001 "Write saved data"** command to reparameterise the computer.

AFTER REPAIR	Deal with any other faults. Clear the fault memory. Switch off the ignition and carry out a road test followed by a check with the diagnostic tool.

GETtheMANUALS.org

RZ002	EGR ADAPTIVES

NOTES	This command is only executed after the exhaust gas recirculation valve has been replaced. Deal with all faults which do not involve the exhaust gas recirculation valve before programming the valve.

After having replaced the exhaust gas recirculation valve, erase the offsets in the memory so that the programming works with the offset value of the new valve.
Procedure to be followed after replacing the exhaust gas recirculation valve:
– Switch on the ignition.
– Connect the diagnostic tool and select the **Clear tab, RZ002 EGR adaptives**.
– Activate the **RZ002** command.
Once the command has finished, check the following parameters and statuses:
– **ET272 Programming first EGR offset:** not performed
– **PR128 EGR valve first offset** = 0.00 V
– **PR129 Last EGR valve offset** = 0.00 V
– **PR051 EGR valve position feedback** = 0.75 V < X < 1.5 V
– Exit fault finding mode and switch off the ignition.
– Then wait for the immobiliser warning light on the instrument panel to flash.
– You must then switch the ignition back on to initialise the new exhaust gas recirculation valve.
– When initialisation is complete, the EGR valve programming function displays:
ET272: Performed
0.75 V < PR128 = PR129 = PR051 < 1.5 V

AFTER REPAIR	Deal with any other faults. Clear the fault memory. Switch off the ignition and carry out a road test followed by a check with the diagnostic tool.

GETtheMANUALS.org

AC004	TURBOCHARGING SOLENOID VALVE

NOTES	Perform this fault finding procedure: – following interpretation of an unresolved fault, or – after using the interpretation of **PR041 Turbocharging pressure** and/or following a customer complaint (lack of power, smoke, etc.).

The following procedure is for checking that the turbocharger and its control circuit are working properly.

Preliminary operation

Check the seal of the high pressure air circuit: run **test 4 Turbocharged air inlet circuit check**.
Pipe not joined or pierced, pressure sensor disconnected or poorly fitted (seal present), exchanger pierced.
To test the intercooler: stabilise the engine speed between **3500 and 4000 rpm** with the vehicle stopped and check that there are no leaks.

Measure the turbocharging pressure regulator resistance between **tracks 1 and 2**. Replace the regulator if its resistance is not:

- **15.4 Ω ± 0.7 at + 20˚C** for a ***PIERBURG*** solenoid valve
- **16.5 Ω ± 1.6 at + 25˚C** for a ***BITRON*** solenoid valve

Check for **continuity and for the absence of interference resistance** on the following connections:

Engine computer, **connector B track L2** → **track 1** of the turbocharging pressure regulator

+ 12 V after relay → **track 2** of the turbocharging pressure regulator

Turbocharger control circuit check

On **F9Q** engines, steps **1, 2, and 3** can be replaced by a visual inspection:
With the engine stopped, make sure that the control rod is in the resting position.
Start the engine and check that the control shaft moves to its upper stop (when the engine is stopped, the control shaft should return to its rest position).

1) Vacuum pressure control check:
Disconnect the solenoid valve inlet **hose** and connect it to a pressure gauge.
Start the engine and run it at a stable idle speed.
If the vacuum pressure does not reach **800 mbar ± 100**: check the vacuum pressure circuit from the vacuum pump.
Stop the engine, reconnect the inlet hoses and go to step **2 Solenoid valve control check**.

AFTER REPAIR	Deal with any other faults. Clear the fault memory. Switch off the ignition and carry out a road test followed by a check with the diagnostic tool.

GETtheMANUALS.org

AC004 **CONTINUED 1**	

Turbocharger control circuit check (continued 1)
2) Solenoid valve control check:
Disconnect the solenoid valve outlet **hose**.
a) with a **PIERBURG** solenoid valve, start the engine and let it stabilise at idle speed.
Place your hand on the solenoid valve and block the outlet **union** with your thumb.
If you notice no solenoid valve vibration, go to **step 5 Computer output stage check, with the solenoid valve connected**)
b) with a **BITRON** solenoid valve, put a cap on the outlet **union**,
Connect a vacuum pump to the inlet **union** and apply a vacuum.
If the vacuum pressure is **maintained**, replace the solenoid valve
If not, reconnect the inlet **hoses**, remove the cap and fit the pressure gauge on the outlet **union**.
Start the engine:
If no vacuum pressure is measured, go to step **no. 5 Computer output stage check, with solenoid valve connected**.
3) Solenoid valve operation check:
Connect the pressure gauge to the solenoid valve outlet **union**.
Start the engine and run it at a stable idle speed.
G9T and G9U engines: if the vacuum does not reach **475 mbar ± 75**, replace the solenoid valve.
Engine F9Q: if the vacuum pressure does not reach **800 mbar ± 100**, replace the solenoid valve,
4) Check the operation of the turbocharger:
Engine stopped:
a) Connect a vacuum pump to the **hose** situated between the solenoid valve and the control diaphragm of the turbocharger.
Apply a vacuum pressure of **800 mbar ± 100:**
If there is a leak, replace the turbocharger (diaphragm cannot be separated from the turbocharger).
b) Check the travel and position of the control rod: run **test 6 Control of a fixed geometry turbocharger by vacuum** for a fixed geometry turbocharger, **test 7 Control of a variable geometry turbocharger** for a variable geometry turbocharger then **test 8 Rotating section of a turbocharger** in both cases.
c) Engine cold and stopped:
Remove the turbocharger air inlet duct and make sure that the compressor is turning freely on its axle.
d) If the fault is still present:
Check that the exhaust manifold is not leaking.
Check that the exhaust is not blocked: run **test 1 Exhaust pipe check**.
Carry out the necessary repairs.

AFTER REPAIR	Deal with any other faults. Clear the fault memory. Switch off the ignition and carry out a road test followed by a check with the diagnostic tool.

GETtheMANUALS.org

AC004 **CONTINUED 2**	

Turbocharger control circuit check (continued 2)
5) Check the output stage of the computer with the solenoid valve connected:
This operation **can only be carried out if** the checks indicated in **step no. 2** are **not conclusive**.
Vehicle with + after ignition, clear the faults displayed by the diagnostic tool.
Using a voltmeter:
Connect the voltmeter earth to **track 2** of the solenoid valve and the positive cable to **track 1**.
Activate the **AC004 Turbocharging solenoid valve** command:

➡ The voltmeter should display **ten cycles** of two successive voltages approximately equal to the product of the battery voltage and the Opening Cyclic Ratio in progress, that is: **~ 2.5 V** for an Opening Cyclic Ratio of **20 %**, then **~ 8.7 V** for an Opening Cyclic Ratio of **70 %**.

Either by oscilloscope (calibrated at **5 V/div** and time base of **1 ms/div)**:
Connect the oscilloscope earth lead to the battery earth and the positive test pin to **track 1** of the solenoid valve.
Activate the **AC004 Turbocharging solenoid valve** command:

➡ The oscilloscope should display a square wave signal of **12.5 V** at a frequency of **140 Hz** (with an Opening Cyclic Ratio passing successively from ~ 20 to ~ 70 %)

If the measurement is correct, replace the solenoid valve.
If the measurement does not show any control or continuous voltage, contact the Techline.

AFTER REPAIR	Deal with any other faults. Clear the fault memory. Switch off the ignition and carry out a road test followed by a check with the diagnostic tool.

GETtheMANUALS.org

AC013	SWIRL FLAP

NOTES	Carry out this interpretation: – following **DF227 Turbulence flap (1.DEF)**, – or after a customer complaint (lack of performance).

Measure the **resistance** of the swirl flap solenoid valve between **tracks 1** and **2**.
Replace the solenoid valve if its resistance is not **46 Ω ± 3 at + 20˚C**.
Check for **continuity and for the absence of interference resistance** on the following connections:

Engine management computer, **connector C track H4** → **track 1** of the solenoid valve connector.

+ 12 V after relay (injection) → **track 2** solenoid valve connector.

A) Engine running at idle speed:
Check there is a vacuum pressure of **~ 900 mbar** in the solenoid valve inlet hose.
Make the necessary repairs (vacuum pressure circuit conformity and seal).
B) With the ignition on and engine switched off: check the solenoid valve for leaks.
Disconnect the solenoid valve inlet and outlet hoses,
Connect a vacuum pump to the inlet union and apply a vacuum pressure of **~ 900 mbar**
If there is a leak, replace the solenoid valve.
Activate the flap with command **AC013 Turbulence flap**.
If the solenoid valve opens (vacuum pump pressure gauge returns to atmospheric pressure), go to **step C**.
Otherwise, with the solenoid valve connected, check operation of the computer output stage with a voltmeter:

Voltmeter earth cable → **track 1** of the solenoid valve

Voltmeter positive lead → **track 2** of the solenoid valve

Clear any solenoid valve faults,
Activate the flap with command **AC013**:
The voltmeter should display **three** ON-OFF cycles: (**+ 12.5 V** then return to **0 V**).
If the measurement is correct, replace the solenoid valve.
If the measurement does not show **any lights**, contact the Techline.
C) Vehicle with ignition off:
Connect a vacuum pump to the valve control diaphragm and apply a negative pressure of **~ 900 mbar**:
If the diaphragm **does not maintain the vacuum pressure**, replace the air distributor (the diaphragm cannot be separated from it).
If the diaphragm **maintains the vacuum pressure** and **no movement*** of the flap is detected, replace the air distributor.
If the diaphragm **maintains the vacuum pressure** and **movement* of the flap is detected**, replace the solenoid valve (check first that no fault of the type **DF056 Air flow sensor circuit, DF325 Exhaust gas recirculation function** or **DF301 Air inlet circuit** is present or stored; if it is, deal with it first).

* *Clicking inside the air distributor when the control vacuum pressure is reached.*

AFTER REPAIR	Deal with any other faults. Clear the fault memory. Switch off the ignition and carry out a road test followed by a check with the diagnostic tool.

GETtheMANUALS.org

AC031	THERMOPLUNGER No. 3 RELAY

NOTES	**There must be no present or stored faults.** Perform this fault finding procedure if there is a fault in the **command** menu, or a passenger compartment heating/demisting fault. Refer to the **Wiring diagrams** Technical Note for the vehicle to locate the fuses and relays concerned.

If the thermoplunger no. 3 relay does not operate when command **AC031 Thermoplunger no. 3 relay** is run.
Check the thermoplunger no. **3** relay mounting connections.
Check the engine management computer connections.
Repair if necessary.

If the fault is still present, check as follows that this relay is controlled by the engine management computer:
Disconnect the thermoplunger no. 3 relay, and fit a **50** to **100 Ω** resistor on the mounting instead of the coil and connect a voltmeter as follows:

- positive terminal to **+ 12 V** battery,
- negative terminal to **track 35** (depending on the engine) of the thermoplunger no. 3 relay mounting.

Clear the fault and activate the **AC031** command.
If the voltmeter indicates the battery voltage (two ON-OFF cycles of **2 seconds**), replace the thermoplunger no. 3 relay.
If the voltmeter does not show the battery voltage (two **2-second** ON-OFF cycles), contact the Techline.

If thermoplunger no. 3 relay operates with command AC031, but there is still a passenger compartment heating/demisting fault, check the following using the wiring diagram:
The conformity of the thermoplunger maxi-fuse.
The presence of the **+ 12 V battery** feed on **track 34** (depending on engine) of the thermoplunger no. **3** relay mounting.
The conformity of the thermoplunger no. **3** relay.
The continuity between **track 37** (depending on the engine) of the thermoplunger no. **3** relay mounting and the thermoplunger no. **4** supply terminal.
The conformity of the thermoplunger resistance: **0.45 Ω ± 0.05 at + 20˚C**.
The presence of the earth on the water chamber (thermoplunger mounting).
Also check the level of the cooling circuit and that there are no leaks.
Carry out the necessary repairs.

AFTER REPAIR	Deal with any other faults. Clear the fault memory. Switch off the ignition and carry out a road test followed by a check with the diagnostic tool.

GETtheMANUALS.org

AC034	LOW PRESSURE PUMP RELAY

NOTES	**There must be no present or stored faults.** Carry out this fault finding in the event of a high pressure pump supply fault. Refer to the **Wiring diagrams** Technical Note for the vehicle to locate the fuses and relays concerned.

If the low pressure pump relay is not working during command **AC034 Low pressure pump relay**.
Check the low-pressure pump relay mounting connections.
Check the engine management computer connections.
Repair if necessary.

If the vehicle is fitted with a **CP3** type high pressure pump, there are two possible scenarios:

- The vehicle is fitted with a priming pump which is required on starting. Command **AC034 Low pressure pump relay** must be working.
- The vehicle is fitted with a priming bulb required to bleed the low pressure circuit. Command **AC034 Low-pressure pump relay** is not useful.

If the vehicle is fitted with a **CP1** type high pressure pump, the low pressure circuit is ensured by a low pressure pump which continuously supplies the high pressure pump.
In this case command **AC034 Low pressure pump relay** must be working.

AFTER REPAIR	Deal with any other faults. Clear the fault memory. Switch off the ignition and carry out a road test followed by a check with the diagnostic tool.

GETtheMANUALS.org

AC035	FUEL PRESSURE SOLENOID VALVE

NOTES	Perform this fault finding procedure: – following interpretation of an unresolved fault – following detection of a fault in the Command menu, – following detection of an inconsistency in the Parameter menu, – following a customer complaint (starting problems, engine speed instability, injection noise).

Step 1
Measure the pressure regulator resistance between **tracks 1 and 2**.
If its resistance is not:
– **3 Ω ± 0.5 at + 20˚C for a CP3 high pressure pump**, replace the regulator.
– **2.5 Ω ± 0.5 at + 20˚C for a CP1 high pressure pump**, replace the regulator.

Check **the continuity and absence of interference resistance** on the connections between:

Engine computer, **connector B track L1** → **track 2** of the pressure solenoid valve connector

+ 12 V after relay → **track 1** of the pressure solenoid valve connector

Activate the **AC035 Fuel pressure solenoid valve** command, if a slight whistling and banging of the pressure regulator are perceptible, go to **step 2**. Otherwise, check the operation of the computer output stage:
Vehicle with + after ignition, clear the faults displayed by the diagnostic tool.
Either using an ammeter:
With the solenoid valve connected, connect the current clamp to the solenoid valve **track 1** connection (in the direction of the current): Activate command **AC035:**

➡ the ammeter should display ten successive cycles of two currents: **~ 0.6 A** then **~ 2 A**

Using a voltmeter:
With the solenoid valve connected, connect the voltmeter earth lead to **track 2** of the fuel pressure solenoid valve and the positive cable to **track 1**. Activate the **AC035** command.

➡ The voltmeter should display two successive voltages approximately equal to the battery voltage multiplied by the current opening cyclic ratio, i.e., alternately: **~ 3.15 V** for an opening cyclic ratio of **25%**, then **~ 9.45 V** for an opening cyclic ratio of **75%** (ten cycles).

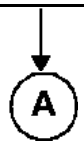

AFTER REPAIR	Deal with any other faults. Clear the fault memory. Switch off the ignition and carry out a road test followed by a check with the diagnostic tool.

GETtheMANUALS.org

AC035 **CONTINUED 1**	

A

Step 1 (continued)
Either by oscilloscope (calibrated at **5 V/div** and time base of **1 ms/div**):
With the solenoid valve connected, reconnect the oscilloscope earth to the battery earth and the positive contact tip to **track 2** of the fuel pressure solenoid valve and run command **AC035 Fuel pressure solenoid valve**:

➡ the oscilloscope should display a square wave signal of **12.5 V** at a frequency of **185 Hz** (with an opening cyclic ratio alternating between **25** to **75%**).

If the measurement taken is correct:
– For engines fitted with a CP3 high pressure pump, replace the regulator.
– For engines fitted with a CP1 high-pressure pump, flush the CP1 high-pressure pump (apply **test 2 High-pressure pump flushing**) for a vehicle (Laguna II) fitted with F9Q 752/754 engines.
– If the measurement is not correct, contact the Techline.

Step 2, next page.

AFTER REPAIR	Deal with any other faults. Clear the fault memory. Switch off the ignition and carry out a road test followed by a check with the diagnostic tool.

GETtheMANUALS.org

AC035 **CONTINUED 2**	

Step 2
In the event of rail overpressure:
Check that there are no air bubbles in the diesel fuel low pressure circuit.
Check that the rail pressure sensor is operating correctly. Interpretation of parameter **PR038 Rail pressure**.
If these checks reveal no irregularities, replace the regulator.
In the event of rail underpressure:
Check that the rail pressure sensor is operating correctly. Interpretation of parameter **PR038 Rail pressure**.
Check the low pressure diesel circuit priming.
Check the conformity of the diesel filter connections.
Check the condition of the filter (clogging and water saturation).
Check that there are no air bubbles between the filter and the high pressure pump.
Check the low and high-pressure diesel fuel systems for leaks: use ALP6 **External leaks on the fuel circuit** fault finding chart (visual inspections, touch tests, odours, etc.) on:
pump body, pressure release valve, pipes, rail and injectors unions, injector wells, etc.
Check the conformity of the seal fitting on the pressure regulator.
Check the operation of the injectors: run **test 10 Poor injector operation** in this document.
Carry out the necessary repairs.

If the engine starts:
Clear any faults on the fuel pressure solenoid valve.
Check the pressure regulating solenoid valve using part B of the ALP7: **Rough idle**.
With the engine warm, leave it running at idle speed a few minutes **(3 to 5 minutes)**:
– If it stalls and the fault reappears, replace the regulator.
– If it does not stall, stabilise the engine speed at **2000 rpm (1 minute)** then accelerate under full load until it cuts out.
If the engine stalls, replace the high pressure pump.
If the engine does not startor there is no timing:
first replace the regulator and, if the fault is still present, replace the high pressure pump.

AFTER REPAIR	Deal with any other faults. Clear the fault memory. Switch off the ignition and carry out a road test followed by a check with the diagnostic tool.

GETtheMANUALS.org

AC036	EGR VALVE

NOTES	Perform this fault finding procedure: – after interpretation of **DF325 "Exhaust gas recirculation function"** fault (2.DEF) unresolved, – after a customer complaint (lack of performance, smoke).

Step 1
Measure **the resistances** of the exhaust gas recirculation valve (***Pierburg*** *or* ***Cooper*** type):
* between **tracks 1 and 5: from 7.5 Ω to 8.5 Ω at + 20˚C**.
* For the ***Pierburg*** exhaust gas recirculation valve:
between **tracks 2 and 4: 2400 Ω to 5600 Ω at + 20˚C**.
between **tracks 2 and 6: 1900 Ω to 6400 Ω at + 20˚C**.
between **tracks 4 and 6: 800 Ω to 3800 Ω at + 20˚C**.
If one of the resistances is not correct, replace the exhaust gas recirculation valve.
Check **the continuity and absence of interference resistance** on the connections between:

Engine computer, **connector B track M1** → **track 5** of the exhaust gas recirculation valve connector

+ 12 V after relay → **track 1** of the exhaust gas recirculation valve connector

If when activating the **AC036 EGR valve** command no valve movement is perceptible, check the operation of the computer output step:
Vehicle with + after ignition, clear the faults displayed by the diagnostic tool.
Either by oscilloscope (calibrated at **5 V/div** and time base of **2 ms/div**):
With the exhaust gas recirculation valve connected, connect the oscilloscope earth to battery earth with the positive test pin on **track 5** of the exhaust gas recirculation valve.
Activate the **AC036 EGR valve** command.
The oscilloscope should display a square pulse signal of **12.5 V** at a frequency of **140 Hz** (with an Opening Cyclic Ratio passing from **25** to **75%**).
Using a voltmeter:
With the exhaust gas recirculation valve connected, connect the voltmeter's earth lead to **track 5** of the exhaust gas recirculation valve and the positive lead to **track 1**. Run command **AC036 EGR valve**; the voltmeter should display two successive voltages approximately equal to the battery voltage multiplied by the current Opening Cyclic Ratio.
That is, successively: **3.15 V** for an Opening Cyclic Ratio of **25%** then **9.45 V** for an Opening Cyclic Ratio of **75%** (10 cycles).
Conclusion:
If the measurement is correct, go to **Step 2**.
If the oscilloscope (or the voltmeter) does not indicate the actuation or a continuous voltage, contact the Techline.

Step 2, next page.

AFTER REPAIR	Deal with any other faults. Clear the fault memory. Switch off the ignition and carry out a road test followed by a check with the diagnostic tool.

GETtheMANUALS.org

AC036 **CONTINUED**	

Step 2
Check that there are no leaks on the exhaust gas recirculation circuit.
Carry out the necessary repairs.
Check the exhaust gas recirculation valve operation:
Apply **test 9 Exhaust gas recirculation valve**, part A.

AFTER REPAIR	Deal with any other faults. Clear the fault memory. Switch off the ignition and carry out a road test followed by a check with the diagnostic tool.

GETtheMANUALS.org

AC037	PREHEATING RELAY

NOTES	This command is only executed if the **DF186 Heater plugs circuit** fault or the **DF017 Preheating unit control circuit** fault is present or stored and if no other fault is present. Carry out the procedure for these 2 faults first. Refer to the **Wiring diagrams** Technical Note for the vehicle to locate the fuses and relays concerned.

Before applying the following fault finding procedure, check that the battery voltage is not below 12 V. Otherwise, recharge the battery.

Step 1:

Using a multimeter fitted with an Amps clamp, group together the 4 supply wires for the heater plugs.
Run command **AC037 Preheating relay** and measure the current consumed by the 4 heater plugs.
If the current consumed is not between **60 A** and **80 A** inclusive, go to step 2, otherwise end of procedure.

Step 2:

Check the connections on the pre-postheating unit, heater plugs and injection computer.
Repair if necessary.
Measure **the resistance** of the heater plugs. If this resistance is **> 2** Ω, replace the defective plug(s).
Check **the continuity and for the absence of interference resistance** between:

preheating unit track 1 → cylinder 3 heater plug
preheating unit track 2 → cylinder 4 heater plug
preheating unit track 6 → cylinder 1 heater plug
preheating unit track 7 → cylinder 2 heater plug.

Check **the condition** of the supply fuse (70 A) for the preheating unit. Replace it if necessary.
Then check for the **+ 12 V feed** on **track 3** of the preheating relay connector.
Check **the continuity and for the absence of interference resistance** between:

Injection computer connector **B track B3** → **track 9** of the preheating unit connector
Injection computer connector **B track C3** → **track 8** of the preheating unit connector

If the fault is still present, replace the pre-postheating unit.

AFTER REPAIR	Deal with any other faults. Clear the fault memory. Switch off the ignition and carry out a road test followed by a check with the diagnostic tool.

GETtheMANUALS.org

AC038	LOW-SPEED FAN ASSEMBLY RELAY

NOTES	**There must be no present or stored faults.** Perform this fault finding procedure if a malfunction appears on the **command** menu or after an engine cooling system or air conditioning fault. Refer to the **Wiring diagrams** Technical Note for the vehicle to locate the fuses and relays concerned.

If, when running command **AC038, the low-speed fan assembly relay** does not operate:
Check the **low speed fan assembly** relay mounting and the connections of the engine management computer.
Repair if necessary.

If the fault is still present, check that the relay is actuated by the engine management computer as follows:
Disconnect the **low-speed fan assembly** relay, and fit a **50** to **100** Ω resistor on the relay mounting in place of the coil, and connect a voltmeter as follows:

- positive terminal to **+ 12 V** battery,
- negative terminal on **track 11** of the **low-speed fan assembly relay** mounting.

Clear the fault and run command **AC038**
If the voltmeter indicates the battery voltage (three **2-second** ON-OFF cycles), replace the relay.
If the voltmeter does not show the battery voltage (three **2 second** ON-OFF cycles), contact the techline.

If the **low-speed fan unit** relay is actuated but there remains a fan unit triggering fault, check the following using the wiring diagram:
The conformity of the fan assembly maxi-fuse.
The conformity of the low-speed fan assembly relay.

The continuity of the connection between **track 9** of the **low-speed fan assembly** relay mounting and **track 1** of the low-speed resistor,
The conformity of the low-speed resistor (resistance and connectors).
The continuity of the connection between **track 2** of the low speed resistor connector and **track 2** of the fan assembly connector.
The conformity of the fan assembly and the continuity of **track 1** to earth.
Carry out the necessary repairs.

AFTER REPAIR	Deal with any other faults. Clear the fault memory. Switch off the ignition and carry out a road test followed by a check with the diagnostic tool.

GETtheMANUALS.org

AC039	HIGH SPEED FAN ASSEMBLY RELAY

NOTES	**No fault should be present or stored:** Perform this fault finding procedure after a malfunction appears on the **command** menu or following an engine cooling fault. Refer to the **Wiring diagrams** Technical Note for the vehicle to locate the fuses and relays concerned.

If, when command **AC039 High-speed fan assembly** is run, the **high speed fan assembly relay** does not operate:
Check the **high speed fan assembly relay** mounting and the engine management computer connectors.
Repair if necessary.

If the fault is still present, check that the relay is actuated by the engine management computer as follows:
Disconnect the **high speed fan assembly** relay, place a **50** to **100 Ω** resistor on its mounting in place of the coil, and connect a voltmeter as follows:

- positive terminal to **+ 12 V** battery,
- negative terminal to **track 7** of the **high-speed fan assembly** relay mounting for engines.

Clear the fault and run command **AC039**
If the voltmeter indicates the battery voltage (three **2-second** ON-OFF cycles), replace the relay.
If the voltmeter does not show the battery voltage (three **2-second** ON-OFF cycles), contact the techline.

If the **high-speed fan assembly** relay is supplied using command **AC039,** but there is still a fan assembly activation fault, check the following using the wiring diagram:
The conformity of the fan assembly maxi-fuse.

The battery + feed of **track 8** of the **high-speed fan assembly** relay mounting.
the conformity of the **high-speed fan assembly relay**,
the continuity of the connection between **track 5** of the **high-speed** fan assembly relay and **track 2** of the fan assembly connector;
The conformity of the fan assembly.
The continuity of the connection between **track 1** of the fan assembly connector and **earth**.
Carry out the necessary repairs.

AFTER REPAIR	Deal with any other faults. Clear the fault memory. Switch off the ignition and carry out a road test followed by a check with the diagnostic tool.

GETtheMANUALS.org

AC063	THERMOPLUNGER No. 1 RELAY

NOTES	(check that the computer is correctly configured) **No fault should be present or stored:** Perform this fault finding procedure if there is a fault in the **command** menu, or a passenger compartment heating/demisting fault. Refer to the **Wiring diagrams** Technical Note for the vehicle to locate the fuses and relays concerned.

If the thermoplunger no. 1 **relay does not operate** during command **AC063 Thermoplunger no. 1 relay**:
Check the connections of the thermoplunger no. 1 relay mounting.
Check the engine management computer connections.
Repair if necessary.

If the fault is still present, check as follows that this relay is controlled by the engine management computer:
Disconnect thermoplunger no. 1 relay, and fit a **50 Ω** to **100** Ω resistor on the mounting instead of the coil and connect a voltmeter as follows:

- positive terminal to **+ 12 V** battery,
- negative terminal to **track 65** (depending on the engine) of the thermoplunger no. 1 relay mounting.

Clear the fault and actuate the relay using command **AC063**.
If the voltmeter indicates the battery voltage (two ON-OFF cycles of **2 seconds**), replace the thermoplunger no. 1 relay.
If the voltmeter does not show the battery voltage (two **2-second** ON-OFF cycles), contact the Techline.

If the thermoplunger no. 1 relay **is supplied**, but there is still a passenger compartment heating/demisting fault.
Check using the wiring diagram:
The conformity of the thermoplunger maxi-fuse.
The presence of **+ 12 V battery** feed on **track 67** (depending on the engine) of the thermoplunger no. 1 relay mounting.
The conformity of the thermoplunger no. 1 relay.
The continuity between **track 63** (depending on the engine) of the thermoplunger no. 1 relay mounting and supply terminal of thermoplunger no. 1.
The conformity of the thermoplunger resistance: **0.45 Ω ± 0.05 at + 20˚C**.
The presence of the earth on the water chamber (thermoplunger mounting).
Also check the level of the cooling circuit and that there are no leaks.
Carry out the necessary repairs.

AFTER REPAIR	Deal with any other faults. Clear the fault memory. Switch off the ignition and carry out a road test followed by a check with the diagnostic tool.

GETtheMANUALS.org

AC064	THERMOPLUNGER No. 2 RELAY

NOTES	(check that the computer is correctly configured) **No fault should be present or stored:** Perform this fault finding procedure if there is a fault in the **command** menu, or a passenger compartment heating/demisting fault.
	Special notes: The thermoplunger No. **2** relay supplies thermoplungers 2 and 3 in parallel. Refer to the **Wiring diagrams** Technical Note for the vehicle to locate the fuses and relays concerned.

If thermoplunger no. 2 relay **does not operate**, during command **AC064 Thermoplunger no. 2 relay**:
Check the connections of the **thermoplunger no. 2 relay** mounting.
Check the engine management computer connections.
Repair if necessary.

If the fault is still present, check as follows that this relay is controlled by the engine management computer:
Disconnect the thermoplunger no. 2 relay, and fit a **50** to **100 Ω** resistor on the mounting instead of the coil and connect a voltmeter as follows:

- positive terminal to **+ 12 V** battery,
- negative terminal to **track 3** (depending on the engine) of the thermoplunger no. 2 relay mounting.

Clear the fault and run command **AC064**.
If the voltmeter indicates the battery voltage (2 ON-OFF cycles of **2 seconds**), replace the thermoplunger no. 2 relay.
If the voltmeter does not show the battery voltage (two **2-second** ON-OFF cycles), contact the Techline.

If the thermoplunger no. 2 relay operates with command AC064, but there is still a passenger compartment heating/demisting fault. Check using the wiring diagram:
The conformity of the thermoplunger maxi-fuse.
The presence of the **+ 12 V battery feed** on **track 1** (depending on the engine) of the thermoplunger no. 2 relay mounting.
The conformity of the thermoplunger no. 2 relay.
The continuity between **track 2** of the thermoplunger no. 2 relay mounting and the supply terminals of thermoplungers **2 and 3** (except on the 16-seater Master bus, thermoplunger no. 2).
The conformity of the thermoplunger resistors: **0.45 Ω ± 0.05 at + 20˚C**.
The presence of the earth on the water chamber (thermoplunger mounting).
Also check the level of the cooling circuit and that there are no leaks.
Carry out the necessary repairs.

AFTER REPAIR	Deal with any other faults. Clear the fault memory. Switch off the ignition and carry out a road test followed by a check with the diagnostic tool.

GETtheMANUALS.org

AC067	DAMPER VALVE

NOTES	Carry out this interpretation: – after **DF056 Air flow sensor circuit**, 2.DEF, – in the case of incorrect operation detected in the **command** menu, – or after a customer complaint (starting faults, poor performance).

Measure the **resistance** of the damper valve solenoid valve between **tracks 1 and 2**.
Replace the solenoid valve if the resistance is not: **46 Ω ± 3 at + 25°C**.
Check **the continuity and absence of interference resistance** on the connections between:

Engine management computer **connector C track F4** ⟶ **track 1** of the damper valve solenoid valve connector

+ 12 V after relay ⟶ **track 2** of the damper valve solenoid valve connector

A) Engine running at idle speed:
Make sure there is a vacuum pressure of **~ 900 mbar** in the solenoid valve inlet hose.
Make the necessary repairs (vacuum pressure circuit conformity and seal).
B) With the vehicle ignition on, engine stopped:
Make sure the **damper valve** is **open**.
If not, clean or replace the air vent unit.
Disconnect the solenoid valve inlet and outlet hoses,
Connect a vacuum pump to the inlet union and apply vacuum pressure of **~ 900 mbar**.
If there is a leak, replace the solenoid valve.
Control the valve using command **AC067**.
If the solenoid valve opens (vacuum pump pressure gauge returns to atmospheric pressure), go to **step C**.
Otherwise, with the solenoid valve connected, check operation of the computer output stage with a voltmeter:

Voltmeter earth cable ⟶ **track 1** of the damper valve solenoid valve

Voltmeter positive lead ⟶ **track 2** of the damper valve solenoid valve connector

Clear any solenoid valve faults,
Actuate the valve via the **AC067** command:
The voltmeter should display **three cycles** of ON-OFF (**12.5 V** then return to **0 V**).
If the measurement is correct, replace the solenoid valve.
If the measurement does not show any lights, contact the Techline.
C) Vehicle with ignition off:
Connect a vacuum pump to the valve control diaphragm and apply a negative pressure of **~900 mbar**:
If the diaphragm **does not maintain the negative pressure**, replace the air vent unit (the diaphragm cannot be disconnected).
If the diaphragm **maintains the vacuum pressure** and **the flap does not move**, clean or replace the diffuser unit.
If the diaphragm **maintains the vacuum pressure** and **the flap moves** then operate it several times to ensure that there is no blockage.
Check for clogging of the air vent unit and its valve, and clean if necessary.

AFTER REPAIR	Deal with any other faults. Clear the fault memory. Switch off the ignition and carry out a road test followed by a check with the diagnostic tool.

GETtheMANUALS.org

VP007	DECREASING THE IDLE SPEED

NOTES	This decrease is possible with the engine at idle speed or stopped (+ after ignition feed switched on) If the adjustment was not made previously, then the idling speed default value is **PR190 Idle speed setpoint** (850 rpm ± 50). When computer data is backed up using command **SC003 Save computer data**, the special vehicle engine speed value is saved.

This command is used to decrease the engine's idle speed by - 50 rpm minimum and in stages of - 10 rpm.

AFTER REPAIR	Deal with any other faults. Clear the fault memory. Switch off the ignition and carry out a road test followed by a check with the diagnostic tool.

GETtheMANUALS.org

VP011	INCREASING THE IDLE SPEED

NOTES	This decrease is possible with the engine at idle speed or stopped (+ after ignition feed switched on) If the adjustment was not made previously, then the idling speed default value is **PR190 Idle speed setpoint** (850 rpm ± 50). When computer data is backed up using command **SC003 Save computer data**, the special vehicle engine speed value is saved.

This command is used to increase the engine's idle speed by + 50 rpm minimum and in increments of + 10 rpm.

AFTER REPAIR	Deal with any other faults. Clear the fault memory. Switch off the ignition and carry out a road test followed by a check with the diagnostic tool.

GETtheMANUALS.org

NOTES	Only refer to the customer complaints after performing a complete check using the **diagnostic tool**.

NO DIALOGUE WITH ENGINE MANAGEMENT COMPUTER →	**ALP1**
STARTING FAULT OR STARTING IMPOSSIBLE →	**ALP2**
INJECTION NOISE →	**ALP3**
POOR PERFORMANCE →	**ALP4**
IRREGULAR ENGINE OPERATION →	**ALP5**
EXTERNAL LEAKS FROM THE FUEL CIRCUIT →	**ALP6**
ROUGH IDLE →	**ALP7**
OIL LEAKS FROM THE TURBOCHARGER →	**ALP8**

GETtheMANUALS.org

ALP1	No dialogue with engine management computer

NOTES	None.

STEP 1

Check the conformity of the vehicle type and the domain selected on your tool.

Check that the tool is not faulty by trying to establish dialogue with a computer on another vehicle.

Check the supply to the diagnostic socket:

↪ + Before ignition on **track 16** / +After ignition on **track 1** / Earth on **tracks 4 and 5**

Check (according to wiring diagram and equipment):

– The conformity of the after ignition fuse.

– The conformity of the injection relay mounting supplies.

– The conformity of the impact sensor: continuity between **tracks 1 and 3** In rest position (before impact)

12 V battery ⟶ **track 3** (by fuse)

continuity between **track 3** and **track 1** of the injection relay

– **The conformity of the injection relay: 65 Ω ± 5** between **tracks 1 and 2**

infinite resistance between **tracks 3** and **5** (open contact)

resistance **< 0.2 Ω** between **tracks 3** and **5** (closed contact).

Disconnect the engine management computer and check that there are no conducting parts on the computer studs.

If this reveals any kind of impurity, rectify it and try to establish dialogue.

If the fault is still present, place bornier **Elé. 1681** on the engine wiring harness:

Check the **continuity and absence of interference resistance** on the following connections:

Engine management computer, **connector A track C3** ⟶ **Diagnostic socket track 7 (line K)**

Engine management computer, **connector A track D3** ⟶ **Diagnostic socket track 15 (line L, if wired)**

Ensure that the power supplies are in order:

Engine computer, **connector B track E3** ⟶ **+ After ignition feed**

Engine computer, **connector A track D3** ⟶ **Earth**

By **putting a shunt** across **tracks 3 and 5** of the central injection unit feed relay mounting, check the continuity of the connection between:

Engine management computer, **connector B tracks M3 and M2** ⟶ **+ 12 V battery feed** (by test shunt)

Check the continuity of the connection between:

Engine management computer, **connector B track D4** ⟶ **track 2** of the central injection unit feed relay mounting

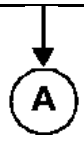

AFTER REPAIR	Carry out a road test followed by a complete check with the **diagnostic tool**.

GETtheMANUALS.org

ALP1 CONTINUED	

Try to start communication with another computer on the same vehicle.

➡ If dialogue can be established with **another computer on the same vehicle**, go to **step 2**.

➡ If dialogue cannot be established **with any other computer on the same vehicle**, the cause could be a faulty computer interfering on the **K and/or L lines.** To locate it, proceed by elimination by successively disconnecting all the computers connected to these lines (using wiring diagram and depending on equipment): Air conditioning, Airbag, ABS and ESP, UCH, instrument panel, central communication unit, parking proximity sensor. Try to establish dialogue after disconnecting each line:

If, after a disconnection, you manage to establish dialogue, perform the fault finding procedure for the computer concerned.

- ↪ If the fault is still present, reconnect the computers listed above and disconnect the engine management computer. Try to establish dialogue with another computer.
  If you manage to establish dialogue, go to **step 2.**
- ↪ If you still cannot establish dialogue, disconnect **all** the computers connected to lines **K and/or L** and check the insulation against **+ 12 V** and against earth on **track 7** and **track 15** of the **diagnostic socket**. Carry out the necessary repairs.

STEP 2

Contact Techline.

AFTER REPAIR	Carry out a road test followed by a complete check with the **diagnostic tool**.

GETtheMANUALS.org

ALP2	Starting difficult (or impossible)

NOTES	**Apply ALP2 after a complete check using the diagnostic tool.**

Is it difficult or impossible to start the engine?

impossible → B

difficult ↓

PART A:
Check the engine earths.
Ensure that engine speed reaches **250 rpm** with the starter motor, as displayed on the parameter screen (**PR055 Engine speed**).
If the engine speed is less than **250 rpm**, refer to Technical Note 6014A, Charging circuit check, 16A (formerly Technical Note 3455A), Starter motor fault finding, Starter motor (formerly Technical Note 3632A).
If the engine speed shown on CLIP is zero and the engine is running, measure the **resistance** of the engine speed sensor across **tracks 1 and 2 or A and B**:
Replace the sensor if its resistance is not: **800 Ω± 80 at + 20˚C on F9Q engine**
235 Ω ± 35 at + 23˚C on G9T - G9U engines

Check the **continuity** of the following connections on **G9T/G9U engines**:

Engine computer, **connector B track G3** → **track 1** of the engine speed sensor

Engine computer, **connector B track H3** → **track 2** of the engine speed sensor

Check the **continuity** of the following connections **on F9Q engines**:

Engine computer, **connector B track G3** → **track A** of the engine speed sensor

Engine computer, **connector B track H3** → **track B** of the engine speed sensor

Check that the engine earthing is in order (oxidation, tightness, etc.).
Check the mounting, the gap (if necessary refer to the information in the workshop repair manual for the vehicle) and the condition of the sensor (overheating).
Replace if necessary.
Check the synchronisation of the camshaft sensors and the engine speed sensors with the display of **ET238 Synchronisation**. If the synchronisation is not **COMPLETED**, refer to the checks described in **DF195 Camshaft/ engine speed consistency**.
Check the fuel circuit sealing: apply **test 3**.
If **test 3** is correct, see **DF197 Fuel pressure signal** 2.def, step 4.

AFTER REPAIR	Carry out a road test followed by a complete check with the **diagnostic tool**.

GETtheMANUALS.org

ALP2 CONTINUED 1	

Check that the heater plugs are actuated using the **AC037 Preheating relay** command.
Check the sealing and condition of the inlet circuit: apply **test 4**, follow the associated diagnostic procedure.
Check that there are no foreign bodies on the flow sensor grille: apply **test 5**, follow the associated diagnostic procedure.
Check the position of the exhaust gas recirculation valve: apply **test 9**.
Check that the exhaust is not blocked: apply **test 1**, follow the associated diagnostic procedure.
Check the consistency of the signal from the engine coolant temperature sensor.
Check that the pressure regulator is working properly (see command **AC035 Fuel pressure solenoid valve**).
Check that the injectors are working properly (return leakage too high, clogging, sticking): apply **test 10**.
Check the engine timing (and the position of the high pressure pump sprocket).
Check the balance of the compressions, according to the power consumption during the starting phase (**Compression test** menu on the CLIP Technic tool).

If you do not have the CLIP Technic tool, or in case of imbalance, use a compression gauge to perform the measurement (see procedure in the Workshop Repair Manual). after the operation, clear the faults caused by disconnecting the regulator and the heater plugs.

AFTER REPAIR	Carry out a road test followed by a complete check with the **diagnostic tool**.

GETtheMANUALS.org

ALP2

CONTINUED 2

B

Is there diesel in the tank?

NO → Fill the tank with diesel fuel. Bleed the low and high pressure diesel circuit.

YES

Does the starter motor work properly (Check that the engine speed reaches **> ~ 250 rpm** with the starter motor, **PR055 Engine speed**)

NO → Refer to Technical Note 6014A, Check the charging circuit, 16A (formerly Technical Note 3455A), Starter fault finding, starter (formerly Technical Note 3632A).

YES

Using the diagnostic tool, check the conformity of the immobiliser: **ET003 Immobiliser** must be **INACTIVE**.

ET003 not in order, or immobiliser warning light continuously lit

Consult the fault finding procedure for the immobiliser.

ET003 in order (immobiliser code warning light switched off)

continue the fault finding procedure with part a of this fault finding chart.

AFTER REPAIR	Carry out a road test followed by a complete check with the **diagnostic tool**.

GETtheMANUALS.org

ALP3	Injection noise

NOTES	**Apply ALP3 after a complete check using the diagnostic tool.**

If the injection noise occurs after starting from cold:

Check the low pressure diesel circuit priming.
Check the fuel heater supply.
Check the operation of the preheating system.
Check that fuel and engine temperatures are consistent.

If the injection noise occurs at idle speed:

Check the condition of the injector connector and pressure regulator terminals.
Check the conformity of the air flow signal: use the: **PR132 Air flow** diagnostics or apply **test 4**.

If the fault is still present, perform the injector fault finding procedure: apply **test 10**.

does the injection noise occur at all engine speeds?

Perform fault finding on the injectors: apply **test 10**.
Check the condition of the injector connector and pressure regulator terminals.
Ensure that the correct fuel is being used.
Apply **test 12 Diesel fuel conformity check**.

Check the conformity of the air flow signal: use the interpretation of the fault finding procedure **PR132 Air flow**.
If the customer complaint is still present:
Run command **AC035 Fuel pressure solenoid valve**.
Then apply the conformity check associated with this note, in order to check:
– the conformity of the fuel pressure: **PR038 Rail pressure**,
– the conformity of the fuel flow from the pump: **PR017 Fuel flow**.
If the fault is still present, contact the techline.

AFTER REPAIR	Carry out a road test followed by a complete check with the **diagnostic tool**.

GETtheMANUALS.org

ALP4	Poor performance

NOTES	**Apply ALP4 after a complete check using the diagnostic tool.**

IMPORTANT
In the event of the engine overheating to more than **119 ˚C**, the computer will voluntarily limit the fuel flow (warning light comes on after **115 ˚C**).
– Please observe the cleanliness guidelines and safety advice.

Is the poor performance accompanied by smoke? — **NO** → **A**

YES ↓

Check:
– that the correct fuel is being used.
– Apply **test 12 Diesel fuel conformity check**.
– The conformity of the assembly of the injectors (presence and **conformity of the sealing washer**).
Checking procedure:
– Take a straightedge approximately 40 cm long and place it on the 4 injectors. The straightedge should rest on the 4 injectors.
– If 1 injector protrudes, remove the injector and check that the washer is correct.
– If one injector does not touch the straightedge (clearance of more than 1 mm), remove the injector and check that the washer is present.
– Clean the injector well and the injector, refit the injector with its correct sealing washer.
– The sealing and condition of the inlet circuit: apply **test 4**.
– The condition of the air flow sensor: apply **test 5**.
– The turbocharger: apply **test 6** for a fixed geometry turbocharger, **test 7** for a variable geometry turbocharger then **test 8** in both cases.
Road test with another cotech:
– The engine must be warm.
– Select 3rd or 4th gear, accelerate with full load on the accelerator.
– Ask the cotech to display the following parameters:
PR209 Turbocharging pressure loop difference,
PR041 Turbocharging pressure,
PR132 Air flow,
PR055 Engine speed.
Check that the turbocharging pressure follows the increase in the engine speed and that the turbocharging pressure loop difference is low. Otherwise, replace the turbocharger.
Apply **test 9**, part A.

AFTER REPAIR	Carry out a road test then check with **the diagnostic tool**.

GETtheMANUALS.org

ALP4 CONTINUED	

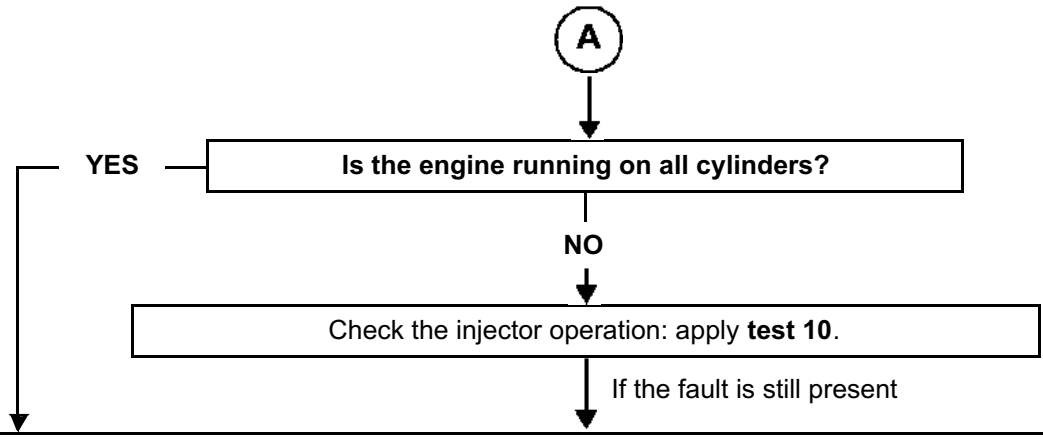

Check the conformity of the accelerator pedal position sensor, the brake pedal sensor, the atmospheric pressure sensor, the exhaust gas recirculation valve and the damper valve.

– Check the consistency of the signal: of the air flowmeter, of the engine coolant temperature sensor, of the fuel temperature sensor and of the engine speed.

Check the connections, continuity and absence of interference resistance of the air flowmeter (apply **DF056 Air flowmeter circuit**, 2.def), the engine coolant temperature sensor (apply **DF001 Coolant temperature circuit**, 1.def), the fuel temperature sensor (apply **DF098 Fuel temperature sensor circuit**, CO.1) and the engine speed (apply **DF195 Camshaft sensor/engine speed consistency**, 2.def).

Check that the turbulence flap is open at rest position: command interpretation **AC013 Turbulence flap** (depending on features).

Check:
- That the diesel fuel filter is not clogged (see **DF197 Fuel pressure signal** 2.def, continued 2, for the check).
- that there are no leaks on the high and low pressure diesel circuits: apply **test 3**.
- That the oil vapour rebreathing system is connected.
- The flow regulator (jamming/sticking: apply command interpretation AC035 **Fuel pressure solenoid valve**).

– Check the timing adjustment (and the position of the high-pressure pump sprocket) (See procedure in the **Workshop Repair Manual if necessary**).

– Check the cylinder compressions (balance of the cylinder compressions with the compression test function on the CLIP Technic tool).

– Measure the engine compressions with the special tool (Refer to the procedure in the **Workshop Repair Manual if necessary**).

If the fault is still present, contact the techline.

AFTER REPAIR	Carry out a road test followed by a complete check with the **diagnostic tool**.

GETtheMANUALS.org

ALP5	Irregular engine operation

NOTES	**Follow ALP 5 after a complete check with the diagnostic tool.**

If the engine races during gear changes, check, if there is a floor carpet, that this is not blocking the accelerator pedal, the brake pedal or the clutch pedal, then check the conformity of the clutch switch and the conformity of the accelerator pedal sensor when the pedal is released.
Measure **the resistance** of the engine speed sensor between **tracks 1 and 2 or A and B**.
Replace the sensor if its resistance is not: **800 Ω± 80 at + 20˚C on F9Q engine**
235 Ω ± 35 at + 23˚C on G9T - G9U engines

Check the **continuity** of the following connections on G9T/G9U engines**:**

Engine computer, **connector B track G3** → **track 1** of the engine speed sensor

Engine computer, **connector B track H3** → **track 2** of the engine speed sensor

Check **the continuity** of the following connections on F9Q engines:

Engine computer, **connector B track G3** → **track A** of the engine speed sensor

Engine computer, **connector B track H3** → **track B** of the engine speed sensor

Check that the engine earthing is in order (oxidation, tightness, etc.).
Check the mounting, the gap (if necessary refer to the information in the workshop repair manual for the vehicle) and the condition of the sensor (overheating).
Replace if necessary.
Check the low pressure circuit: apply **test 3**.
– Check the pressure regulating solenoid valve using part B of **ALP7 Rough idle**.
approximately 1350 bar under load with foot hard down on the accelerator.
– Apply the method used for checking the air flow, explained in the Conformity check section.
– Check the turbocharger: apply **test 6** for a fixed geometry turbocharger, **test 7** for a turbocharger with variable geometry, then **test 8** in both cases.
– Use the procedure for checking the hydraulic circuit that is explained in the Conformity check.

If the fault is still present:
– Check the balance of the cylinders using the CLIP Technic function, **Compression test** physical measurements icon.
– Check the engine compressions with the special tool, if necessary.

AFTER REPAIR	Carry out a road test followed by a complete check with the **diagnostic tool**.

GETtheMANUALS.org

ALP6	Fuel system leaks

NOTES	**Follow ALP 6 after a complete check with the diagnostic tool.** **IMPORTANT** **Please observe the cleanliness guidelines and safety advice.**

Procedure for checking for an external leak on the fuel circuit:
Clean away traces of grease with clean thinner and wipe the part or parts concerned with cleaning cloths.
Start the engine and increase the engine temperature until the diesel fuel reaches 50/60˚C.
Stop the engine and check for traces of grease on the part or parts concerned.
If this is the case, replace the part or parts concerned.
Bleed the fuel circuit and continue the checks.

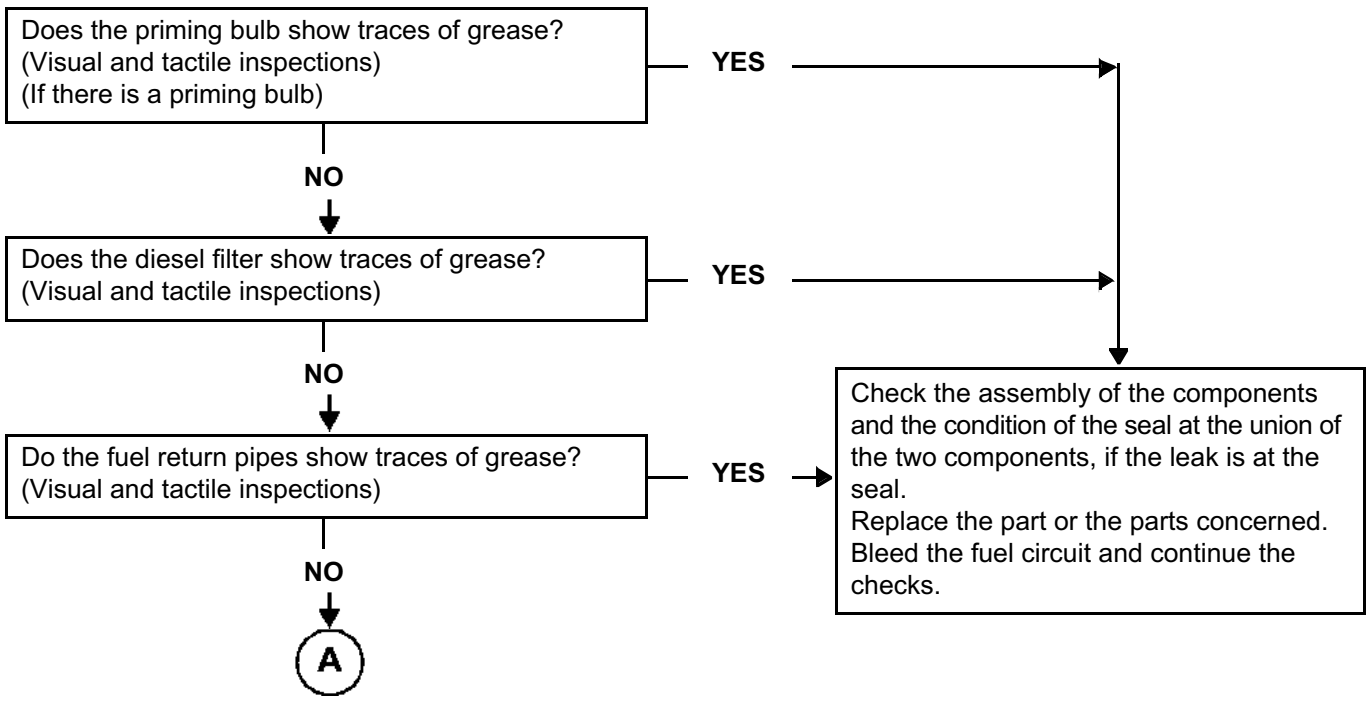

AFTER REPAIR	Carry out a road test followed by a complete check with the **diagnostic tool**.

GETtheMANUALS.org

ALP6

CONTINUED

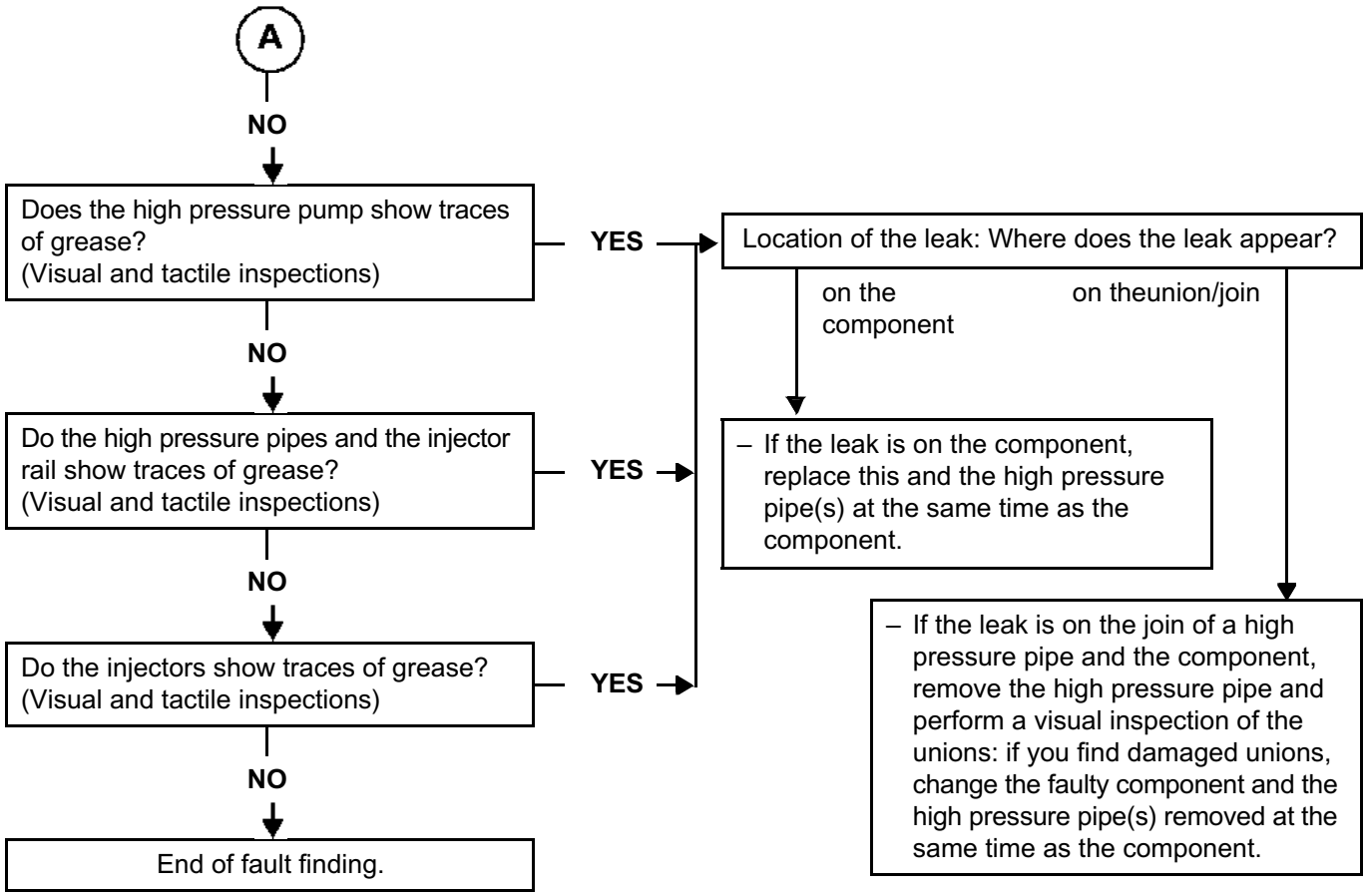

Reminder:
Do not replace the rail, pump or injector unless the union is damaged during the visual inspections.
Bleed the fuel circuit and continue the checks.

AFTER REPAIR	Carry out a road test followed by a complete check with the **diagnostic tool**.

GETtheMANUALS.org

ALP7	Rough idle

NOTES	**Before analysing this customer complaint, check that there are no faults, and the conformity (or otherwise) of the parameters and statuses using the diagnostic tool.** **If the customer complaint is not eliminated, perform the following checks.**

Check the sealing and condition of the inlet circuit using **Test 4 Turbocharged air circuit test and Test 9 Exhaust gas recirculation valve.**

↓

Check the low pressure circuit, run **Test 3 Low pressure circuit check.**

↓

check the engine parameters:
– check the update of the engine management computer calibration (last calibration).
– Check the conformity of the **IMA** codes (using the **Identification screen** of the **CLIP diagnostic tool**).
– Check the charging circuit (see **Technical Note 6014A Checking the charging circuit**).

– To check the conformity of the engine speed signal, check:
* The wiring.
* The flywheel position and the condition of the flywheel teeth.
* The position and tightness of the engine speed sensor.

– Check the fuel flow correction from station to station: run **Test 10 Poor injector operation**.

↓

Check the connections and wiring of the injectors.
Check the connections and wiring from the engine management computer to the injectors.
Repair if necessary.

↓

Check the high pressure circuit (external leaks) (see the end of **ALP6 Fuel circuit external leaks**).

↓

(A)

AFTER REPAIR	Carry out a road test followed by a complete check with the **diagnostic tool**.

GETtheMANUALS.org

ALP7 CONTINUED	

Check the timing setting (and the position of the high pressure pump pinion)

Check the lower engine:
– Check the compressions using the CLIP Technique **diagnostic tool**, **Compression test** or the special tool.
– Check the engine mountings only if there is noise or excessive vibrations at idle speed.
If the checks are correct, contact the Techline.

AFTER REPAIR	Carry out a road test followed by a complete check with the **diagnostic tool**.

GETtheMANUALS.org

ALP8	Oil leaks from the turbocharger

NOTES	**Complete ALP8 after a complete check using the diagnostic tool.**

Clean the oily parts of the turbocharger, when cold, with cleaning cloths (part number: 77 11 211 707).

→ At idle speed, check if the turbocharger is leaking from the turbocharger oil supply inlet or outlet, from the turbine inlet or outlet or from the compressor and the rear plate of the compressor housing.

← If the leak is at the inlet or outlet of the turbocharger's oil supply.
Replace the seal of the leaky pipe or the pipes if necessary.

If the leak is at the inlet or outlet of the turbine* or of the compressor*.
Check manually if the end play is normal or excessive (see photograph on the next page).
Is the end float normal?

NO → Replace the turbocharger and check:
– that the turbocharger oil supply circuit is not blocked.
Perform an oil change and change the oil filter.
Change the air duct.
Empty and clean the intercooler and the air circuit ducts.

YES ↓

If the leak is on the rear plate (compressor housing).
Replace the turbocharger.

IMPORTANT
Risk of destroying the new turbocharger and the engine if the air circuit is not cleaned and the oil and its filter are not replaced.

*Note:
It is normal to find traces of oil at the turbocharger inlet and outlet, as the air passing through the compressor is loaded with oil from the engine rebreathing circuit.

The operating play of the turbocharger bearings is approximately 25 µm between the turbocharger shaft and the internal mating face of the bearings and 75 µm between the exterior part of the bearings and the bearing housing.
Risks:
In the event of destruction of the turbocharger bearings, the steel and bronze swarf from this destruction are evacuated through the turbocharger oil to the engine's oil sump. The swarf can, consequently, be returned to the oil circuit via the oil pump, then cause widespread contamination of the engine oil circuit. This causes abnormal wear on the crankshaft bearing bushings, the con rod bearing shells and the camshafts, etc.
In the event of the compressor wheel breaking, parts of the blades may be found in the intercooler or in the air circuit ducts. The turbine wheel could easily be found in the catalytic converter.

AFTER REPAIR	Carry out a road test followed by a complete check with the **diagnostic tool**.

GETtheMANUALS.org

EXHAUST SYSTEM CHECK → TEST1

FLUSHING THE HIGH PRESSURE PUMP → TEST2

LOW PRESSURE CIRCUIT TEST → TEST3

TURBOCHARGED AIR INLET CIRCUIT CHECK → TEST4

AIR FLOW SENSOR → TEST5

VACUUM CONTROL OF A FIXED GEOMETRY TURBOCHARGER → TEST6

VARIABLE GEOMETRY TURBOCHARGER CONTROL → TEST7

ROTATING SECTION OF A TURBOCHARGER → TEST8

EXHAUST GAS RECIRCULATION VALVE → TEST9

POOR INJECTOR OPERATION → TEST10

INCORRECT OPERATION OF THE RAIL OVERPRESSURE VALVE → TEST11

DIESEL FUEL CONFORMITY CHECK → TEST12

GETtheMANUALS.org

TEST1	Exhaust system check

Engine stopped: Check that the silencer outlet is not blocked. Repair or replace the silencer, if necessary.

↓

Check the seal of the exhaust manifold on the contact surface between the turbocharger and the exhaust manifold.
Is the seal in order?

NO → Repair or replace the faulty part.

YES

↓

Loosen the catalytic pre-converter on the turbocharger side. Place a wooden block between the two parts.
Start the vehicle and check if the engine runs better.
Is the engine running normally?

NO → The exhaust pipe is not the cause of the fault; repeat the engine fault finding in the Customer complaints - Fault finding chart section.

YES

↓

Retighten the catalytic pre-converter.
Loosen the catalytic converter on the catalytic pre-converter side. Place a wooden block between the two parts.
Start the vehicle and check if the engine runs better.
Is the engine running normally?

NO → Replace the catalytic pre-converter.

YES

↓

(A)

GETtheMANUALS.org

TEST1 CONTINUED	

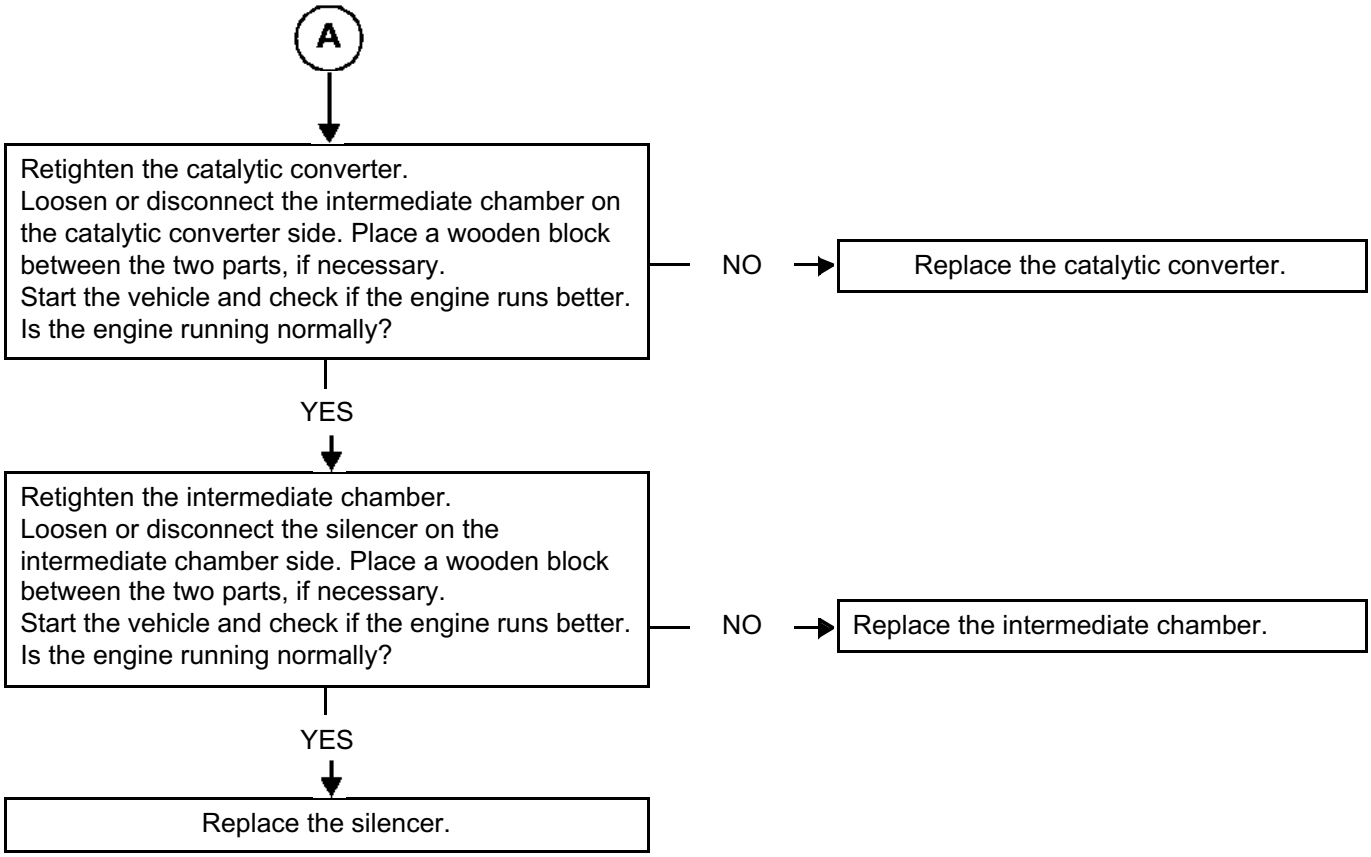

GETtheMANUALS.org

TEST2	Flushing the high pressure pump

*For **CP1 pumps only**!*
This operation is designed to flush any particles likely to jam or upset operation of the pressure regulator, into the return circuit. The particles are then trapped by the fuel filter.
Rinsing requires simultaneously pressurising the high-pressure pump feed circuit and controlling the rail pressure regulation solenoid valve.
Procedure: (refer to the **Wiring diagrams** Technical Note for the vehicle)

- With the ignition off:
- Remove the low pressure pump relay.
- On the engine fuse box and relay, shunt the power circuit of the low pressure pump relay.
- Connect the diagnostic tool and switch on the ignition.
- Establish dialogue then go to command mode.
- Run command **AC035 Fuel pressure solenoid valve 3 to 5 times**.
- Switch off the ignition.
- Remove the shunt and replace the high pressure pump relay.
- Switch on the ignition again and establish dialogue.
- Clear the low pressure pump relay fault.
- Start the engine and record the rail pressure values.

If the operation has improved the rail pressure values:
Repeat the procedure to complete the flushing operation. During the road test to follow, put your foot to the floor several times to drive out any impurities to the tank.
End of operation.
If the operation has had no effect on the rail pressure values:
Repeat (or perform) the **AC035 step 2** fault finding procedure.

GETtheMANUALS.org

TEST3	Low pressure circuit check

High pressure pump? — CP1 → B

CP3 ↓

Check the fuel filter:
- Conformity of the fuel filter (correct part number and RENAULT filter).
- Positioning and amount of clogging in the filter element.
- Positioning and condition of the seals.
- **If there is metal swarf in the filter:**
  Replace the fuel filter, bleed the circuit and **continue the fault finding procedure**.

↓

Supplying the injection system with fuel from an additional tank.
This operation aims to detect possible faults in the low pressure supply system of a vehicle by replacing it entirely with an additional tank.
Mode:
- Disconnect the diesel fuel supply pipe at the fuel filter inlet and seal it with a plug.
- On vehicles fitted with an electric priming pump (no priming bulb), remove the pump feed relay.
- Connect a pipe to the fuel filter inlet and insert the other end in a **clean** container of approximately 5 litres.
- Disconnect the diesel return pipe at the diesel temperature sensor (pump return and injector return join), and block it using a plug.
- Connect a transparent pipe at the union of the diesel temperature sensor, and insert the other end in the container.
- Fill the container with **clean** diesel fuel.
- Start the engine and let the system drain itself of its air (there must not be any air bubbles in the return pipe).

↓

Is the customer complaint still present? — YES → If the low pressure circuit is in order, reconnect the various pipes making up the low pressure circuit and repeat the fault finding procedure in the fault finding chart or for the fault that referred you to this test.

NO ↓

Are the low pressure circuit connections in order and in good condition? — NO → Carry out the necessary repairs.

YES ↓

A

GETtheMANUALS.org

TEST3 CONTINUED 1	

(A)

Check the condition and operation of the priming bulb (depending on the engine), of the priming pump (depending on the engine). Perform repairs if necessary and continue the test.

If the fault is still present with a low fuel level, check the consistency of the actual fuel level and that indicated on the instrument panel.
– The transfer pump is supplied via a venturi valve located beneath it.
Check that the opening of the venturi (**6 to 8 mm** in diameter) is not blocked by dirt contained in the fuel tank.
Check the priming of the low pressure diesel circuit.

Ensure that the correct fuel is being used.
Apply **test 12 Diesel fuel conformity check.**

Special features of the low pressure circuit on vehicles fitted with a priming pump
This pump is only activated for a few seconds when the ignition is switched on and when starting.
– Check that the pump is working during these phases.
Carry out the necessary repairs.

Low pressure circuit correct.

GETtheMANUALS.org

TEST3 CONTINUED 2	

B (CP1)

Connect a 0 - 5 bar pressure gauge to the high pressure pump inlet (using a T-piece) and read the pressure with the engine running:
Follow the cleanliness instructions carefully.

Pressure > 1.5 bar. — YES → Pressure < 2 bar. — NO → Replace the fuel filter unit.

NO

YES

Connect the pressure gauge at the inlet of the filter and repeat the operation.

Low pressure circuit correct.

Pressure > 1.5 bar. — YES → Low pressure circuit correct upstream of the filter. Check the clogging of the filter and the pipe kinked at the filter outlet.

NO

Remove the pipe at the filter inlet.
Place a container here to catch the fuel.
Display the fuel flow with the ignition on:

If the fuel flow is approximately 1 litre per 30 seconds, the pump and the pipes of the circuit upstream from the pump are in order.
Otherwise, replace the fuel filter head.

C

GETtheMANUALS.org

TEST3 CONTINUED 3	

C

If the fault is still present with a low fuel level, check the consistency of the actual fuel level and that indicated on the instrument panel.
– The transfer pump is supplied via a venturi valve located beneath it.
Check that the opening of the venturi (**6 to 8 mm** in diameter) is not blocked by dirt from the fuel tank.

Ensure that the correct fuel is being used.
Apply **test 12 Diesel fuel conformity check.**
END **TEST 3**.

GETtheMANUALS.org

TEST4	Checking the turbocharged air inlet circuit

Engine stopped: Check the low and high-pressure air circuits for **leaks** (air leaks in or out, upstream or downstream of the turbocharger).

Check the parts that are abnormally greasy of the circuit and reveal a lack of tightness.
Check:
– The condition and fitting of the ducts (foreign bodies, clogged, disconnected, pinched, broken, holed, cut, tightness of the mounting bolts, etc.).
– the presence, condition and fitting of the seals.
– the present and tightening of the clamps.
– The fitting of the turbocharging pressure sensor.
Carry out the necessary repairs.

Checking the air filter.

Check:
– That the air filter unit inlet and outlet are not blocked.
– The condition and the assembly of the air filter unit (disconnected, broken, holes, etc.).
– The cleanliness, conformity and the absence of deformation of the filter element.
– The air flowmeter: apply **test 5**.
Carry out the necessary repairs.

If the engine is equipped accordingly, check:
– that the damper valve is open (**AC067 Damper valve**, step B).
– the condition of the damper valve:
– the tightness of the mounting bolts,
– cracks in the damper valve.
– that the turbulence flap is in the rest position (**AC013 Turbulence flap**, step B).
Carry out the necessary repairs.
Replace if necessary.

Check that there is no leakage on the exhaust manifold, in particular at the exhaust manifold / turbocharger interface.
Check the exhaust system: apply **test 1**.
Carry out the necessary repairs.

Check the condition of the intercooler:
– clogging,
– leaks (vehicle stationary, stabilise the engine speed between 3500 rpm and 4000 rpm and check that there are no leaks).
Replace if necessary.
END OF TEST.

GETtheMANUALS.org

TEST5	Air flowmeter

+ 12 V supply
(Refer to the **Wiring Diagrams Technical Note** for the vehicle to locate the **connections** and **connectors** concerned).

Check the **+ 12 V** supply on **track 4** of the air flowmeter.
If it is not correct, check **the continuity and absence of interference resistance** on the connection between the air flowmeter supply relay and **track 4** of the air flowmeter.
Carry out the necessary repairs.

Check the operation of the air flowmeter supply relay.
Replace the relay if necessary.
If not, check the supply to the air flowmeter supply relay.

If it does not conform, check **the continuity and absence of interference resistance** on the connections between the air flowmeter supply relay and between the fuse(s) and the battery.
Repair, if not correct.
If correct, check the fuse(s) concerned. Replace the fuse(s) if necessary.

↓

Contamination of the grilles
Visual inspection: remove the flowmeter; there should be no foreign bodies in the grilles (see illustration no. 110734 on the last page of this test).
Do not clean the grilles using compressed air or any other procedure: this damages the sensors and creates variations from the values displayed on the CLIP tool.
Check the air circuit sealing upstream of the air flow sensor: ducts and air filter unit disconnected or pierced, presence of seals.
Replace the air flowmeter if necessary and clean upstream of this, if necessary.

↓

Damage to electrical components
Visual inspection: remove the air flow sensor; components should not be broken (see diagram no. 110736 on the last page of this test).
Replace the air flowmeter if necessary.

↓

Oxidation of the electrical components
Visual inspection: remove the air flowmeter, there should not be any greenish deposits on the electrical components.
Replace the air flowmeter if necessary.

↓

Clogging of the air flowmeter
See following page.

GETtheMANUALS.org

TEST5 CONTINUED 1	

Clogging of the air flowmeter
Test:
– Check the values for conformity:
  * During the first 5 seconds after starting:
    – Coolant temperature: 80˚C.
    – Engine speed: idle speed (800 rpm for G9T 702 and F9Q 754 engines),
    – Air flow value: 59 kg/h ± 5 % for G9T 702 engines and 47 kg/h ± 5 % for F9Q 754 engines,
    – EGR valve opening cycle ratio*: 5%.
  * After the starting phase:
    – Coolant temperature: 80˚C.
    – Engine speed: idle speed (800 rpm for G9T 702 and F9Q 754 engines),
    – Air flow value: 33 kg/h ± 5 % for G9T 702 engines and 27 kg/h ± 5 % for F9Q 754 engines.
    – EGR valve opening cycle ratio*: between 35% and 45%.
– Refer to DF056 2.def, for the air flowmeter checks.
Replace the air flowmeter if necessary.

* OCR = Opening Cycle Ratio.

GETtheMANUALS.org

TEST5 CONTINUED 2	

Contamination of the grille

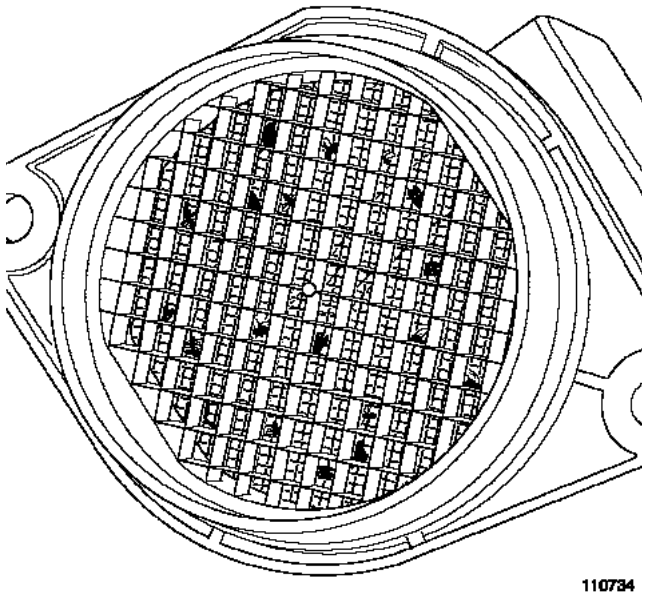

110734

Damage to the electrical sensors

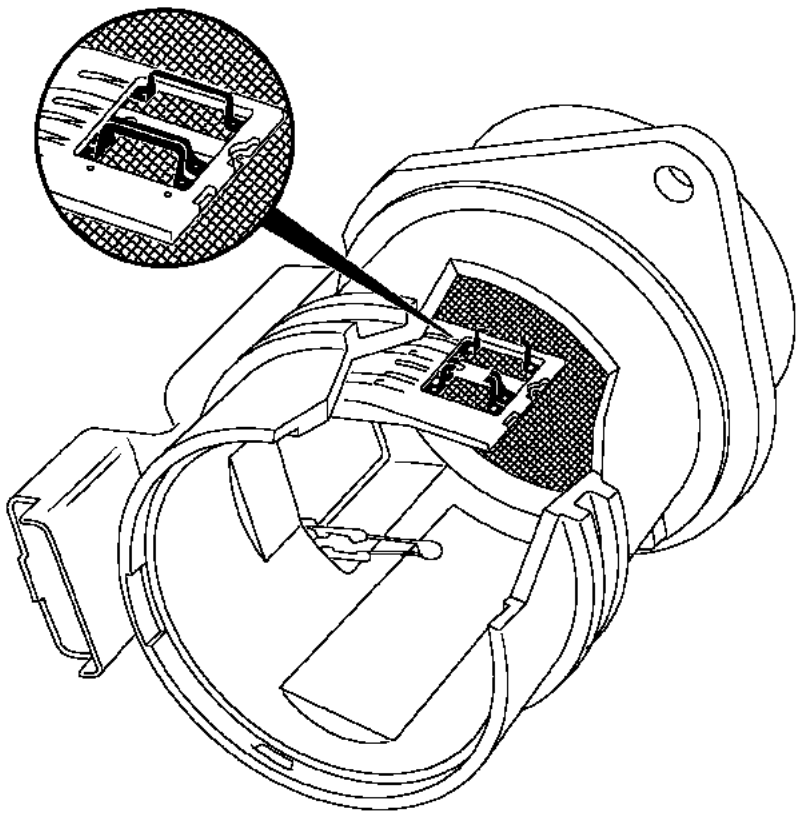

110736

GETtheMANUALS.org

TEST6	Fixed geometry turbocharger vacuum control

Engine stopped:
Check manually if the rod of the regulation valve is blocked.
Is the rod jammed?

YES → Replace the turbocharger.

NO ↓

At idle speed, turbocharging solenoid valve control: 85% OCR*, disconnect the electrical connector of the solenoid valve and check at the same time if the wastegate control rod moves.
Does the rod of the wastegate move from end to end?

YES → The turbocharging control circuit is operating normally.

NO ↓

Check the condition of the wastegate valve connectors (corrosion, bent pins, etc.).
Measure the resistance of the solenoid valve between its tracks 1 and 2. It should be:
– 15.4 Ω ± 0.7 at + 20°C for a *Pierburg* solenoid valve,
– 16.5 Ω ± 1.6 at + 20°C for a *Bitron* solenoid valve.
Is the solenoid valve in order?

NO → Replace the turbocharging solenoid valve.

YES → Check the continuity and the + 12 V and earth insulation of the connection between track L2 of connector B of the engine management computer and track 1 of the turbocharging solenoid valve connector. Check the continuity and earth insulation of the connection between the 12 V feed after the injection relay and track 2 of the turbocharging solenoid valve connector.

→ (A)

* OCR = Opening Cycle Ratio.

GETtheMANUALS.org

TEST6

CONTINUED

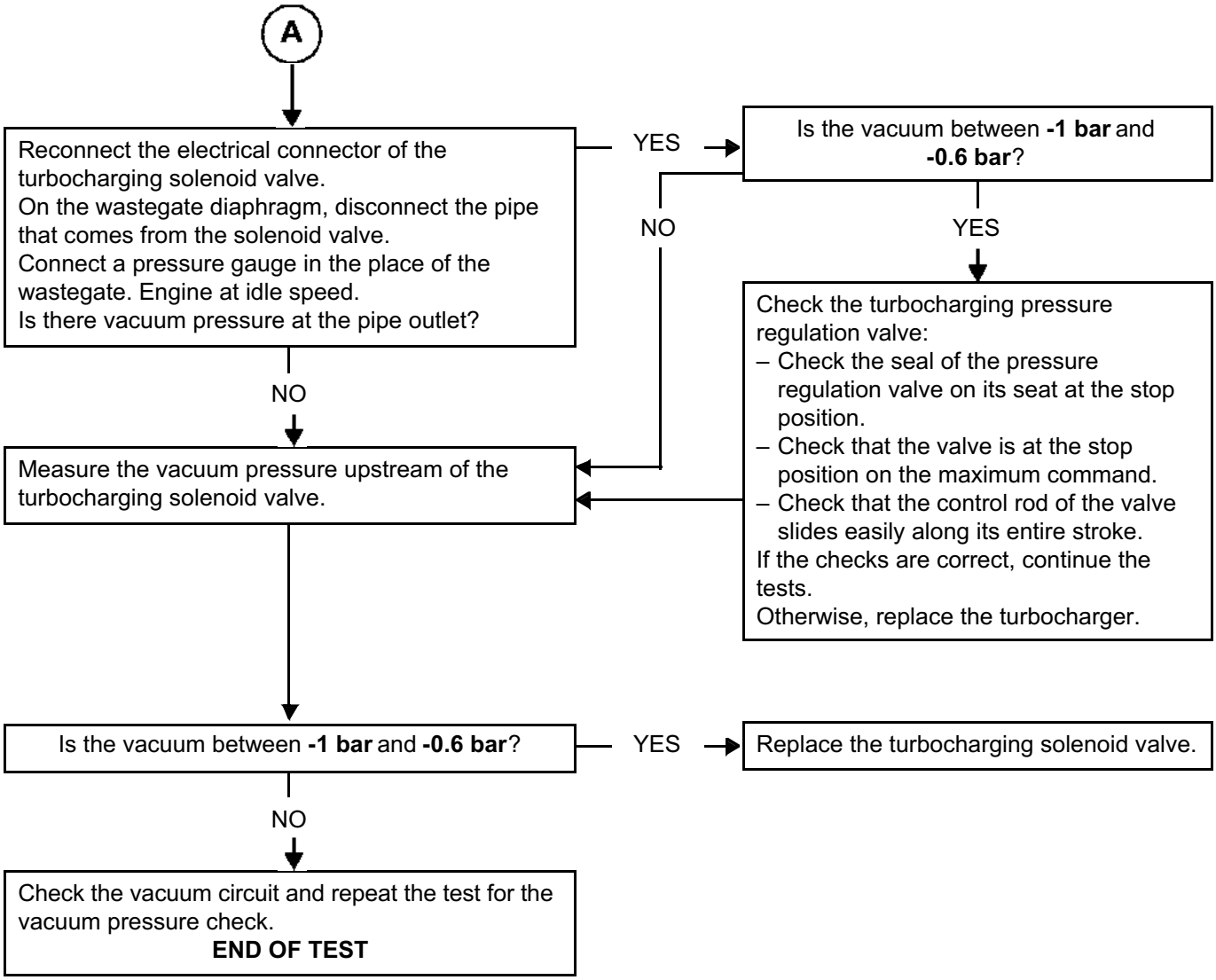

GETtheMANUALS.org

TEST7	Variable geometry turbocharger control

Engine stopped:
Check manually if the variable geometry control rod is jammed.
Is the rod jammed?

YES →
– Replace the turbocharger.
– Perform a visual inspection of the condition of the turbine and the compressor (see the illustrations of **test 8**).
If one of the 2 wheels is damaged, you should also replace the duct connected to the damaged wheel.

NO ↓

At idle speed, with turbocharging solenoid valve control: 85% OCR*, disconnect the electrical connector of the solenoid valve and check at the same time if the rod controlling the blades of the variable geometry turbocharger moves.
Does the rod move from end to end?

YES →
The turbocharging control circuit is operating normally.

NO ↓

Check the condition of the turbocharging solenoid valve connectors (corrosion, bent pins, etc.).
Measure the resistance of the turbocharging solenoid valve between its tracks 1 and 2.
It should be:
– 15.4 Ω ± 0.7 at + 20˚C for a *Pierburg* solenoid valve,
– 16.5 Ω ± 1.6 at + 20˚C for a *Bitron* solenoid valve.
Is the solenoid valve in order?

NO →
Replace the turbocharging solenoid valve.

YES →
Check the continuity and the + 12 V and earth insulation of the connection between track L2 of connector B of the engine management computer and track 1 of the turbocharging solenoid valve connector.
Check the continuity and earth insulation of the connection between the 12 V feed after the injection relay and track 2 of the turbocharging solenoid valve connector.
Repair, if necessary.

* OCR = Opening Cycle Ratio.

GETtheMANUALS.org

TEST7 CONTINUED	

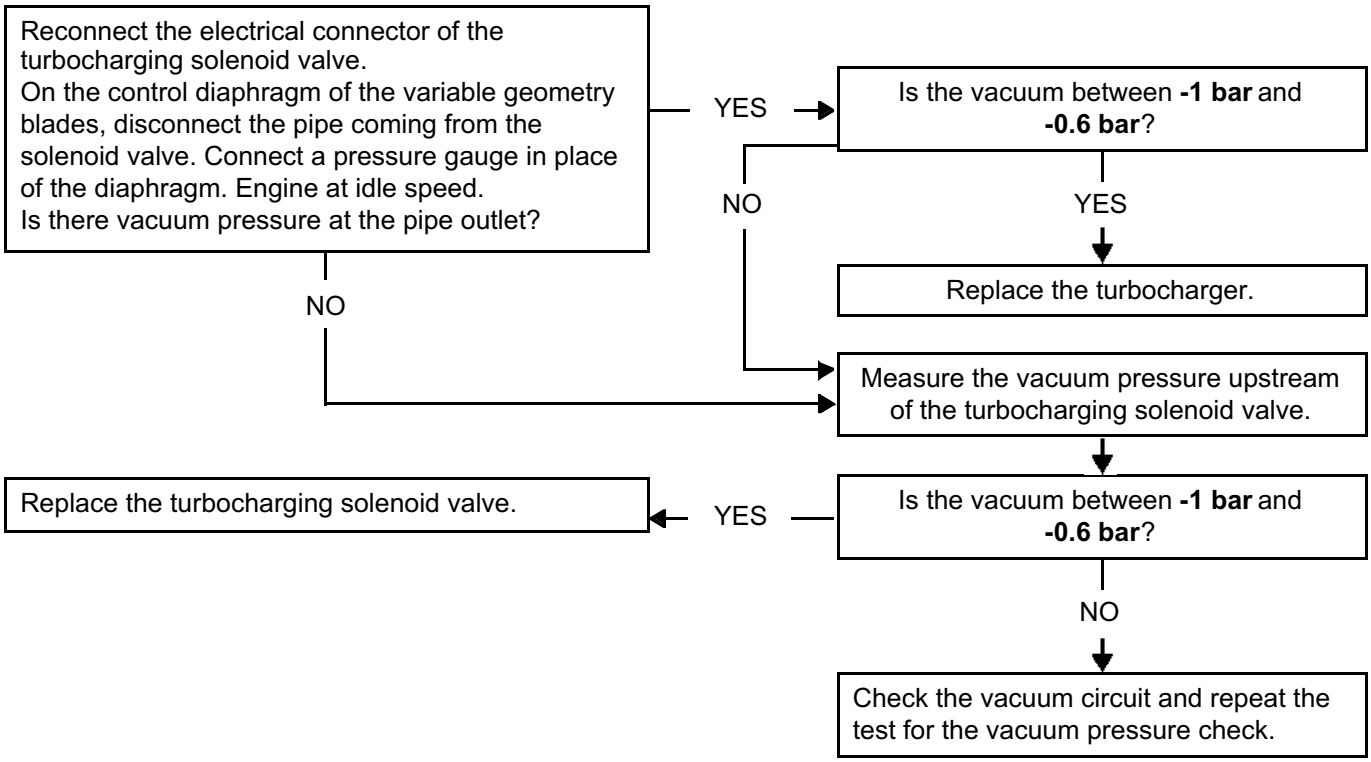

GETtheMANUALS.org

TEST8	Rotating part of a turbocharger

With the engine cold and stopped, remove the air inlet duct from the turbocharger; check manually if the shaft of the turbine and of the compressor turns. Does the shaft turn?

NO → Replace the turbocharger.

The turbocharger could be sticking due to poor lubrication of the bearings. Check for possible clogging of the lubrication circuit and the engine oil pressure.
Perform an oil change and change the oil filter.

YES

Perform a visual inspection of the condition of the wheels (see the illustrations on the next page).
Are the wheels in good condition?

NO →
– Replace the turbocharger.
– Replace the duct connected to the damaged wheel.

YES

The rotating section is in order.

The operating play of the turbocharger bearings is approximately 25 μm (micrometers or microns) between the turbocharger shaft and the internal mating face of the bearings and 75 μm between the exterior part of the bearings and the bearing housing.

Risks:

In the event of destruction of the turbocharger bearings, the steel and bronze swarf from this destruction are evacuated through the turbocharger oil to the engine's oil sump. The swarf can, consequently, be returned to the oil circuit via the oil pump, then cause widespread contamination of the engine oil circuit. This causes abnormal wear on the crankshaft bearing bushings, the con rod bearing shells and the camshafts, etc.
In the event of the compressor wheel breaking, parts of the blades may be found in the intercooler or in the air circuit ducts. The turbine wheel could easily be found in the catalytic converter.

GETtheMANUALS.org

TEST8 **CONTINUED**	

Deformed, twisted blade (“soft” foreign body)

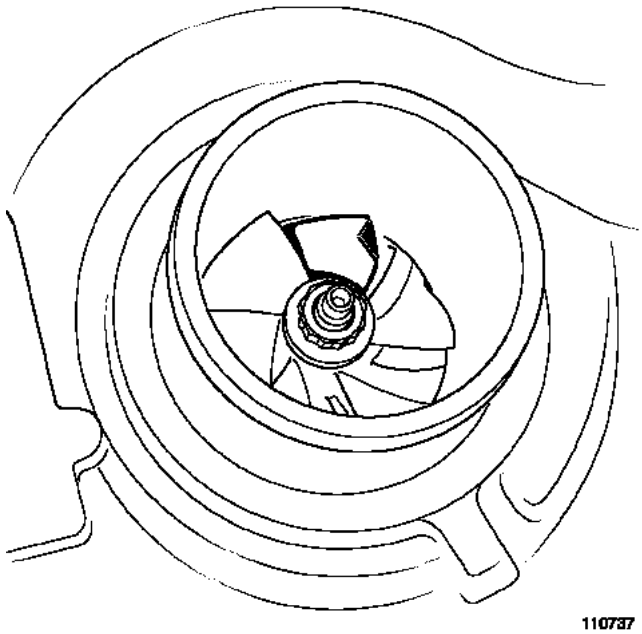

Broken blades (“hard” foreign body)

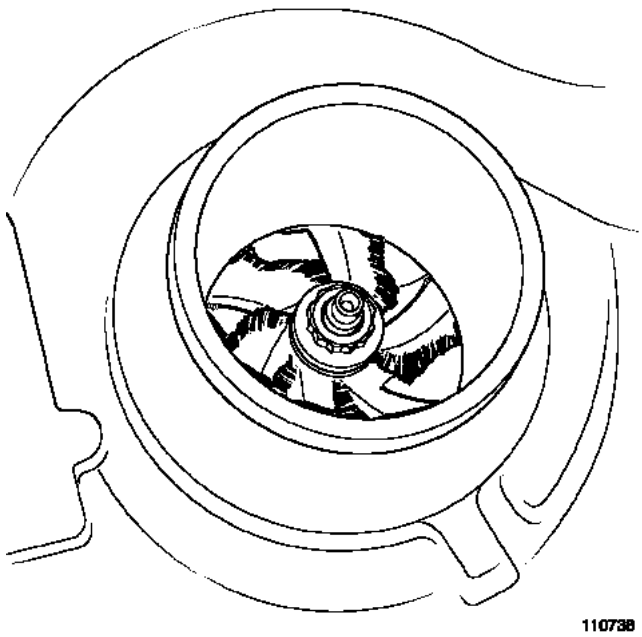

GETtheMANUALS.org

TEST9	Exhaust gas recirculation valve

PART A

Fault finding on the valve position
Or detection of a leak on the exhaust gas recirculation valve
Please observe the cleanliness guidelines and safety advice.
F9Q engine:
Clear the faults.
Use the **RZ002 "EGR adaptives"** command to try to reinitialise the operating values of the exhaust gas recirculation valve.
Switch off the ignition and wait for the engine immobiliser warning light to start flashing.
Switch the ignition back on and check for faults.
If the fault is still present:
– exit CLIP tool diagnostic mode,
– switch off the vehicle ignition,
– disconnect the exhaust gas recirculation valve connector,
– remove the exhaust gas recirculation valve using the special tool (refer to Workshop Repair Manual) and reconnect it after having removed it,
– check that no particles are blocking the movement of the exhaust gas recirculation valve flap,
– check that the exhaust gas recirculation valve is not stuck or jammed in one position,
– switch on the ignition again and return to fault finding mode using the CLIP tool,
– use the **AC036 EGR valve command with the valve removed**,
– check the movement of the valve with **PR220 EGR valve OCR*** (**0 to 2.5 mm** travel for an opening cyclic ratio of **40%** and when fully open, **~ 5 mm**, for an opening cyclic ratio of **95%**),
– check that the exhaust gas recirculation valve flap closes completely,
– if there was no displacement, or if the jamming of the exhaust gas recirculation valve cannot be solved, replace the exhaust gas recirculation valve and follow the procedure for replacing the exhaust gas recirculation valve (see **Replacement of components** section).
G9T engine:
Apply section C of this test.

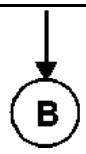

GETtheMANUALS.org

TEST9 CONTINUED 1	

PART B

Exhaust gas recirculation valve potentiometer fault finding
Use the CLIP diagnostic tool to compare **PR051 EGR valve position feedback** and the setpoint voltage or OCR* and check if there are any drops in feedback (micro-breaks).

↓

Exhaust gas recirculation valve bushing fault finding
With the engine stopped and the ignition on, record the **PR051 EGR valve position feedback**; the voltage should be less than 1.5 V.
Remove the exhaust gas recirculation valve and perform a visual inspection: the exhaust gas recirculation valve should not have a cluster of soot between the base and the flap.
Clean the exhaust gas recirculation valve bushing and replace the exhaust gas recirculation valve if necessary, and follow the procedure for replacing the exhaust gas recirculation valve (see **Replacement of components** section).

↓

* OCR = Opening Cycle Ratio.

GETtheMANUALS.org

TEST9

CONTINUED 2

PART C

– Select **DF056 Air flow sensor circuit** or **DF325 Exhaust gas recirculation function**. If none of these faults appear on the CLIP diagnostic tool, end of **test 9**.
Otherwise, display the context of the fault selected.
– Bring up **PR235 EGR position voltage after programming** in the context of the appearance of the fault (select the fault to make the appearance conditions appear).
– Is **PR235 ≥ 1.8 V**?

YES

– Activate the **AC036 EGR Valve** command 4 times.
– Display **PR051 EGR valve position feedback**.
– Is **PR051 ≥ 1.5 V**?

YES

– Replace* the pipe and the exhaust gas recirculation valve according to the procedure described in the Workshop Repair Manual.
– For the valve, follow the procedure (see **Replacement of components**).
– Follow the recommendations of the **fault finding confirmation**.

NO

– Replace* the exhaust gas recirculation pipe according to the procedure described in the Workshop Repair Manual.
– **Do not replace the EGR valve.**
– Follow the recommendations of the **fault finding confirmation**

NO

– Activate the **AC036 EGR Valve** command 4 times.
– Display **PR051 EGR valve position feedback**.
– Subtract **PR235** from **PR051**
– Is the result ≥ **0.3 V**?

YES

– Activate the **AC036 EGR Valve** command 4 times.
– Display **PR051 EGR valve position feedback**.
– Is **PR051≥ 1.5 V**?

YES

– **Do not replace the exhaust gas recirculation pipe.**
– Replace* the exhaust gas recirculation valve and follow the procedure for replacing the exhaust gas recirculation valve in the **Replacement of components** section.
– Follow the recommendations of the **fault finding confirmation**.

NO

– **Do not replace the exhaust gas recirculation pipe.**
– **Do not replace the EGR valve.**
– Check the air circuit: apply **test 4**.

*** Please observe the cleanliness guidelines and safety advice.**

GETtheMANUALS.org

TEST9 **CONTINUED 3**	

Confirmation of the fault finding:
- Start the vehicle.
- Leave the engine at idle speed for **1 min**.
- Accelerate very slowly up to **1500 rpm for 2 minutes** until the exhaust gas recirculation function becomes active.
- Carry out a vehicle test at low speed, without accelerating heavily, then normally.
- Check the faults using the CLIP diagnostic tool. If the customer complaint or the faults recur, contact the Techline.

GETtheMANUALS.org

TEST10	Incorrect injector operation

Part A: Fuel regulation balance check for each injector (individual correction):

– In the **CLIP diagnostic tool**, choose the **Fuel circuit** sub-function.
– With the engine idling and the fuel temperature **> 50˚C**, display the flow correction values of each injector (individual correction), i.e.:
  – PR364 Cylinder no. 1 fuel flow correction.
  – PR405 Cylinder no. 2 fuel flow correction.
  – PR406 Cylinder no. 3 fuel flow correction.
  – PR365 Cylinder no. 4 fuel flow correction.

The normal flow correction **value** per injector is between **- 5 mg/stroke and + 5 mg/stroke without reaching these values**.

– If this has not already been carried out, check the injector connections and wiring.
– Check the connections and wiring of the engine management computer to the injectors.
– Repair if necessary.

– Check the **IMA** injector codes, by comparing the **IMA** engraved codes on the injectors (the **IMA** codes are read from left to right) and the **IMA** codes read with the **CLIP diagnostic tool**.
– If the **IMA** codes are correct, continue the fault finding procedure.
– If not, modify the incorrect **IMA** codes using command **SC002 Enter injector codes** (see **Interpretation of commands**).

To confirm the repair, refer to part B of test 10.

CASE no. 1: If at least one of these values is greater than or equal to + 5 mg/stroke

– Check the valve clearance.
– Check the engine condition and the compressions (using **the CLIP diagnostic tool** or using a compression gauge).
– If the compression test reveals a cylinder fault, carry out the necessary repairs.
– If the compression is correct, check that the injector is correctly fitted (see **MR 402 (Vel Satis ph2), 353 (Vel Satis), 361 (Espace IV) or 339 (Laguna II), Mechanical, 13B, Diesel injection, Injector**).

Ensure that each injector has only one heat protection washer.

Check the fuel regulation again for each injector (individual correction).

– Otherwise, replace the injector and check the presence of the sealing washer. Modify the **IMA** code using command **SC002 Enter injector codes** (see **Interpretation of commands**).
– Apply **Part B** of this test to confirm the fault finding.

CASE no. 2: If at least one of these values is less than or equal to - 5 mg/stroke

– Check the valve clearance.
– Check the level and condition of the engine oil.
– Remove the injector with the largest adjustment.
– If there is contamination via the diesel, check the condition of the cylinder concerned (cylinder, piston, valves). Use an endoscope if possible.
– Only replace the removed injector, and modify the **IMA** code using command **SC002 Enter injector codes** (see **Interpretation of commands**).
– Apply **Part B** of this test to confirm the fault finding.

AFTER REPAIR	Carry out a road test followed by another check with the **diagnostic tool**.

GETtheMANUALS.org

TEST10 CONTINUED 1	

CASE no. 3: If at least one of these values does not stabilise (20 seconds after starting)
– Check the low pressure circuit with **test 4 Low pressure circuit check**.
– Ensure that the correct fuel is being used.
– Apply **test 12 Diesel fuel conformity check.**
– Apply **Part B** of this test to confirm the fault finding.

CASE no. 4: If the fuel flow correction values are all correct ones (between - 5 mg/stroke and + 5 mg/stroke)
– Apply **Part C** of this test (**Fuel return flow measurement).**

IMPORTANT
When removing and refitting the injectors, observe the cleanliness guidelines and safety advice (see **MR 402 (Vel Satis ph2), 353 (Vel Satis), 361 (Espace IV) or 339 (Laguna II), Mechanical, 13B, Diesel injection, Injector**)

Part B: Confirmation of flow correction fault finding for each injector (individual correction):
Clear the faults and perform a test with the engine idling for at least **5 minutes**, fuel temperature **> 50˚C**.

Check that there are no faults on the **Clip diagnostic tool** and that the correction values do not reach ±**5 mg/st** to confirm the repair.
If the customer complaint is still present and the fuel flow correction values are all between **-5 mg/st and +5 mg/st**, apply **Part A: Fuel regulation balance check for each injector (individual)** of this test (**CASE no. 4**).

If one or more cylinders has an injector flow correction value which reaches ±**5 mg/st**, apply **Part A Fuel regulation balance check for each injector (individual)** of this test, as one or more injectors may be defective.

Part C: Measuring fuel return flow

1 - Fitting the tool:
Only carry out this part if PRO63 Fuel temperature is greater than 50˚C (see step 2 of Part C of this test).
Remove the engine undertray
Disconnect the entire fuel return pipe in accordance with the following procedure (do not remove the clips):
– press the clip,
pull vertically on the end piece (see arrow in illustration below) of the fuel return pipe.

AFTER REPAIR	Carry out a road test followed by another check with the **diagnostic tool**.

GETtheMANUALS.org

TEST10 **CONTINUED 2**	

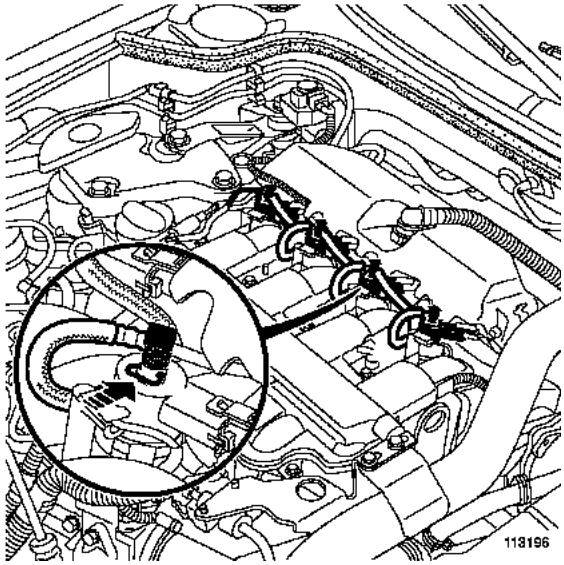

IMPORTANT
The end piece is fragile. Be careful not to break it by pulling it too hard. Replace all removed clips.

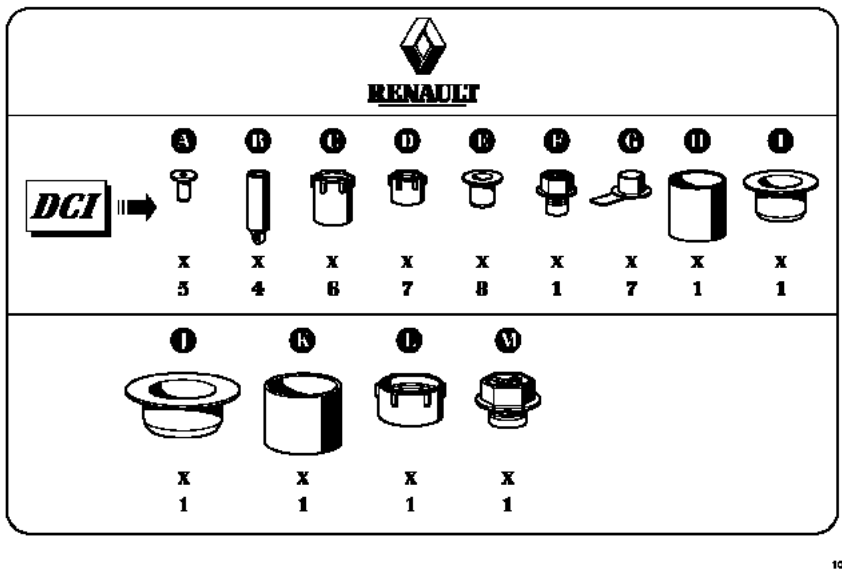

Fit the blanking plugs (**B**), from the kit **(part number 77 01 208 229)**, on the end pieces of the fuel return pipe.
If **Mot. 1760** is not fitted on the injectors immediately, place blanking plugs (**A**) on the injector fuel return openings.

AFTER REPAIR	Carry out a road test followed by another check with the **diagnostic tool**.

GETtheMANUALS.org

TEST10 **CONTINUED 3**	

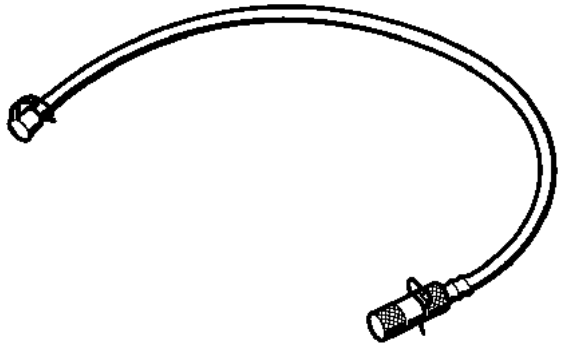

113195

On the pipes of **Mot.1760** (see illustration 113195), remove the clips and the plugs from the end pieces (on the right in the diagram) and leave the plugs (on the left in the diagram) in place.

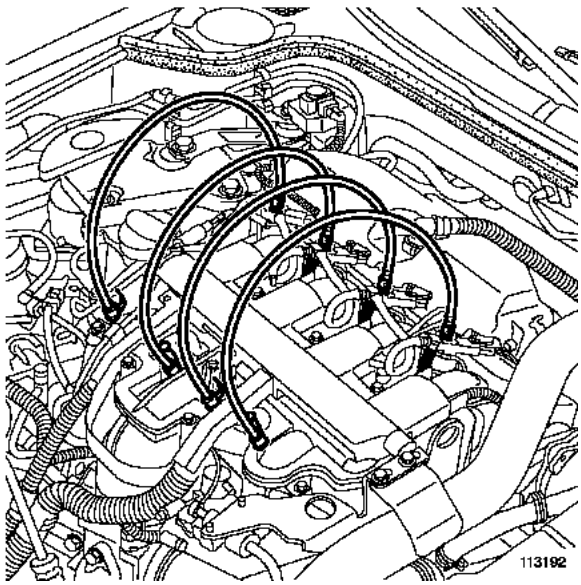

113192

Connect the pipes of tool **Mot.1760** to the injectors (without removing the clips on the injectors):
– press on the injector clip,
– insert the end piece into the injector fuel return opening.
– remember to fit the end piece plugs to the injector fuel return openings with the clips provided.
Remove the plugs left on the **Mot.1760**

AFTER REPAIR	Carry out a road test followed by another check with the **diagnostic tool**.

GETtheMANUALS.org

TEST10 **CONTINUED 4**	

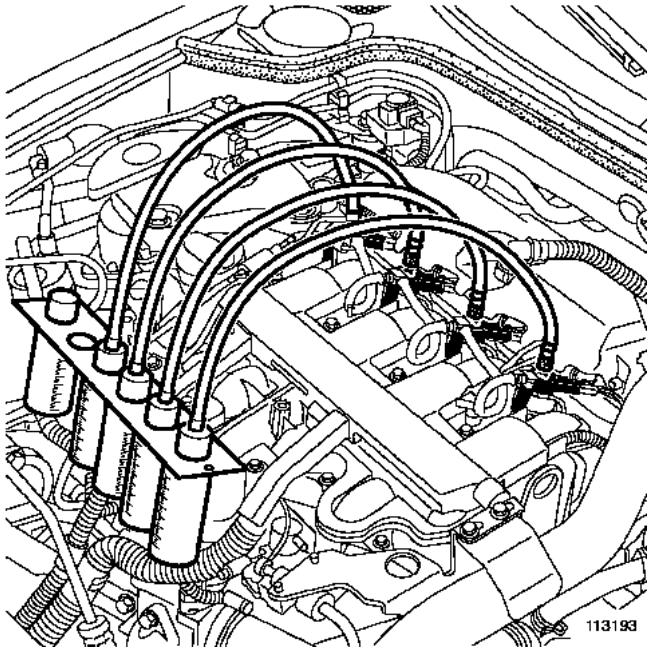

Insert the ends of the pipes into the measuring cylinders of tool **Mot.1760**. The measuring cylinders are taken from tool **Mot. 1711.**

AFTER REPAIR	Carry out a road test followed by another check with the **diagnostic tool**.

GETtheMANUALS.org

TEST10 CONTINUED 5	

2 - Check the injector return flow balance:

Does the engine start?

NO →
- Fit **Mot. 1760** as shown in the tool fitting procedure.
- Start the vehicle or perform a **15 second** starting sequence (with ignition key).
- Measure the length travelled by the diesel fuel in the pipes of the **Mot. 1760**.
- Replace the injector if the length travelled by the fuel is more than **10 cm** compared with the average of the other three injectors.

YES ↓

- The injector return pipes must be fitted to the injectors.
- Start the engine.
- Display the **Fuel circuit** sub-function in the **CLIP diagnostic tool**.
- Raise the temperature of the engine.
- Read the diesel fuel temperature with **PR063 Fuel temperature** until a diesel fuel temperature greater than **50˚C** is reached.
- Switch off the engine.
- Fit **Mot. 1760** as shown in the installation procedure (see step 1).
- Check the value of the **PR038 Rail pressure**.
- Ask another Cotech to monitor the rise in fuel in the cans during engine turnover, as one of the cans will fill up quickly if one of the injectors is leaking.
- Start the engine.
- Accelerate the engine until the pressure in the rail is **550 bar**:
  * if the engine speed is **less than 3000 rpm**, maintain this pressure.
  * if the engine speed is **greater than 3000 rpm**, reduce the engine speed until the rail pressure is **500 bar** and maintain this pressure.
- Maintain these conditions for **1 min**.
- Release the accelerator pedal and maintain the idle speed for **10 seconds**.
- Switch off the engine.
- Measure the quantity of fuel contained in each measuring cylinder.
- Replace the injector if the quantity of fuel is more than **50 ml**.
- Remove **Mot. 1760** as shown in the **tool** removal procedure (see step 3).

3 - Removing the tool:

IMPORTANT
Use a cleaning cloth (part number **77 11 211 707**) to absorb fuel run-off.

Disconnect the pipe from an injector:
- press on the injector clip,
- pull vertically on the end piece of the pipe of tool **Mot.1760**, placing a wipe on the end piece to prevent run-off.

Lift the end piece vertically so that the fuel contained in the pipes flows into the measuring cylinders of tool **Mot.1760**.

Remove the other 3 pipes using the same procedure.

AFTER REPAIR	Carry out a road test followed by another check with the **diagnostic tool**.

GETtheMANUALS.org

TEST10 **CONTINUED 6**	

Remove the plug welds from the fuel return pipe end pieces.

Connect the complete fuel return pipe to the injectors.

Wipe up any fuel run-off with a cleaning cloth (part number **77 11 211 707**).

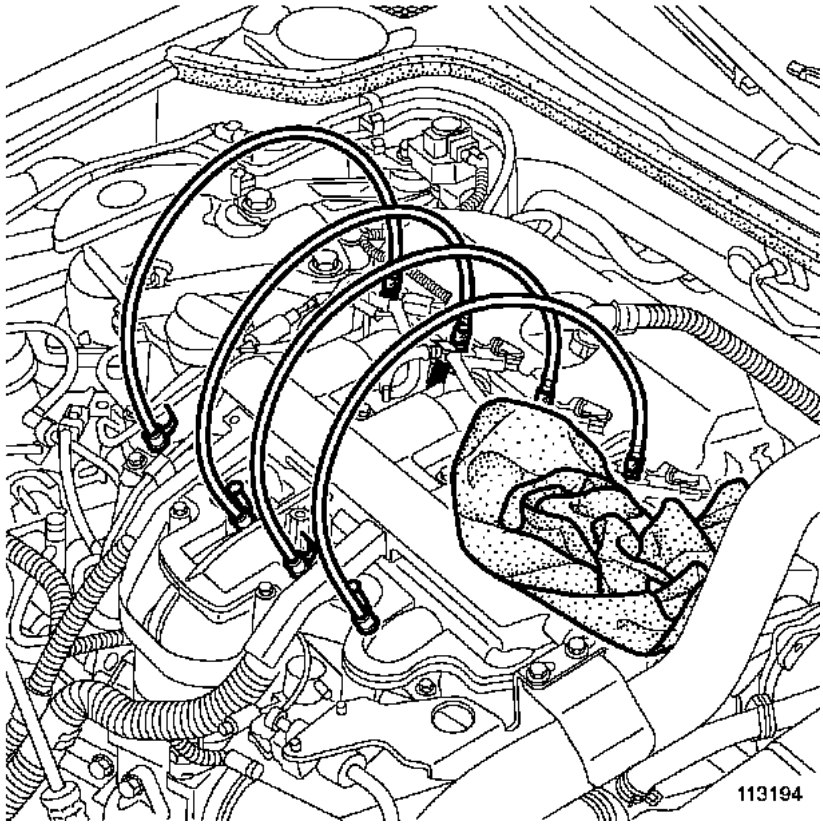

End of test 10.

AFTER REPAIR	Carry out a road test followed by another check with the **diagnostic tool**.

GETtheMANUALS.org

TEST11	Incorrect operation of the rail overpressure valve

1) Overpressure valve return flow test:

Is the engine working?

YES

NO

– Fit the tool **Mot. 1760** as shown in the tool fitting procedure (see section 2).
– Perform a **15-second** starting sequence (with ignition key).
– Measure the length travelled by the diesel fuel in the pipes of **Mot. 1760**.
– Replace the overpressure valve if the diesel length travelled is greater than **10 cm**.

– Start the engine.
– Set the **diagnostic tool** to parameter reading mode.
– Raise the temperature of the engine.
– Read the diesel temperature using parameter **PR063 Fuel temperature**:
  * if the temperature varies rapidly: increase the fuel temperature to more than **50˚C**,
  * if the temperature does not vary on the diagnostic tool display or varies too slowly: carry out a road test (driving) for **15 minutes.**
– Switch off the engine.
– Fit the tool **Mot. 1760** as shown in the installation procedure (see section 2).
– Put the diagnostic tool in parameter reading mode and check **PR038 Rail pressure.**
– Ask another Cotech to monitor the rise in diesel fuel in the can during engine turnover, as the can will fill up quickly if the overpressure valve is leaking.
– Start the engine.
– Accelerate the engine until the pressure in the rail is **550 bar**:
  * if the engine speed is less than **3000 rpm**, maintain this pressure.
  * if the engine speed is greater than **3000 rpm**, reduce the engine speed until the rail pressure is **500 bar** and maintain this pressure.
– Maintain these conditions for **1 min**.
– Release the accelerator pedal and maintain the idle speed for **10 seconds**.
– Switch off the engine.
– Measure the quantity of fuel contained in the measuring cylinder.
– Replace the injector rail if the quantity of diesel fuel is greater than **5 ml**.
– Remove the tool **Mot. 1760** as shown in the tool removal procedure (see section 3).

GETtheMANUALS.org

TEST11 CONTINUED 1	

2) Fitting the tool

Remove the engine undertray.

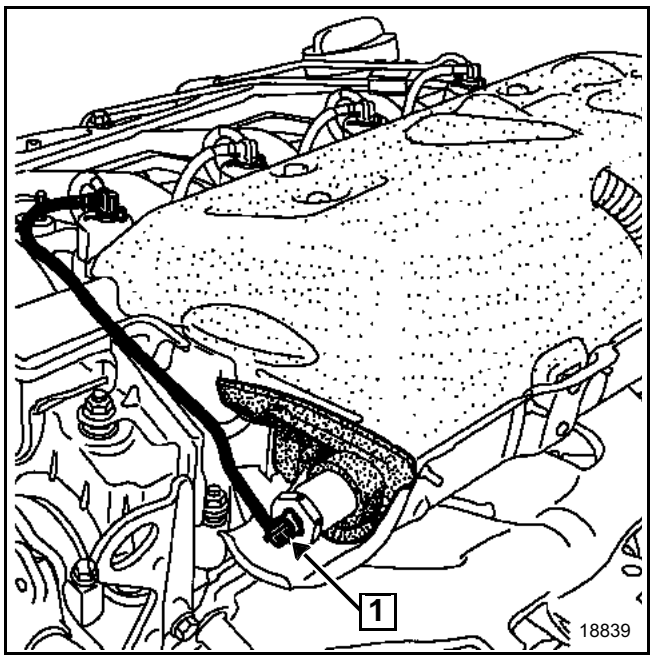

Disconnect the return pipe from the rail overpressure valve according to the following procedure (do not remove the clips):
– press the clip,
– pull horizontally on the end piece (1) of the fuel return pipe.

IMPORTANT
The end piece is fragile. Be careful not to break it by pulling it too hard. Replace all removed clips.

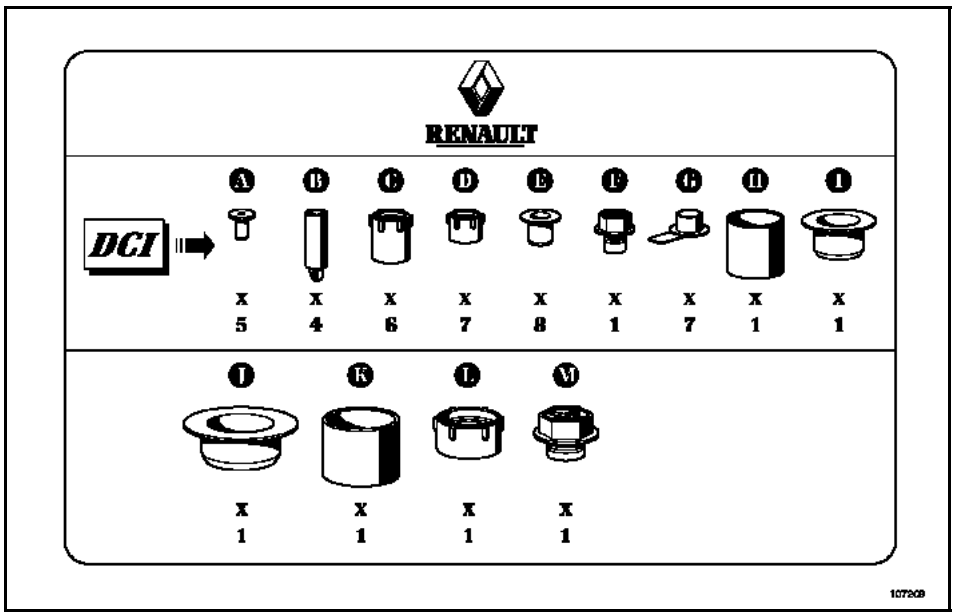

Fit the blanking plugs (**B**), from the kit **(part number 77 01 208 229)**, on the end pieces of the fuel return pipe.
If **Mot.1760** is not fitted immediately on the rail overpressure valve, place a blanking plug (**A**) on the fuel return opening of the rail overpressure valve.

GETtheMANUALS.org

TEST11 CONTINUED 2	

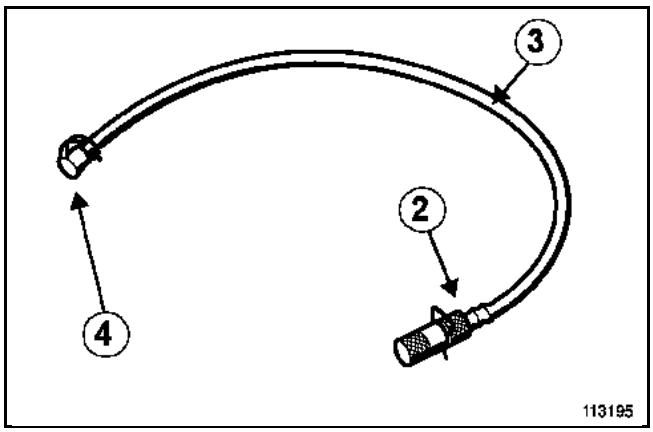

Remove the clip and the plug from the end piece (2) of the pipe (3) of tool **Mot. 1760,** leave the plug (4) in place.

Connect the pipe (3) to the rail overpressure valve (without removing the clip on the overpressure valve):
– press down on the clip (1) of the overpressure valve,
– insert the end piece (2) in the overpressure valve fuel return opening.
– do not forget to fit the end piece plug (2) to the overpressure valve fuel return opening using the clip supplied.

Remove the plug (4).

Insert the end of the pipe in the measuring cylinder of the tool **Mot. 1760**, the measuring cylinder is retrieved from the tool **Mot. 1711.**

Measure the return flow (see procedure in section 1 of the overpressure valve return flow test).

3) Removing the tool

IMPORTANT
Use a cleaning cloth (part number **77 11 211 707**) to absorb fuel run-off.

Disconnect the pipe (3) from the overpressure valve:
– press down on the clip (1) of the overpressure valve,
– pull horizontally on the end piece (2) of the pipe (3) of tool **Mot. 1760** while putting a cloth on the end piece (2) to avoid the drips.

Lift the end piece (2) vertically so that the fuel contained in the pipes flows into the measuring cylinder of the tool **Mot. 1760**.

Remove the plug from the fuel return pipe end piece (2).

Connect the complete fuel return pipe to the overpressure valve.

Wipe up any fuel run-off with a cleaning cloth (part number **77 11 211 707**).

GETtheMANUALS.org

TEST12	Diesel fuel conformity check

WARNING
During this operation, it is essential to:
– refrain from smoking or bringing incandescent objects close to the work area,
– protect yourself against fuel splashes due to residual pressure in the pipes,
– wear safety goggles with side guards,
– wear leaktight gloves (Nitrile type).

IMPORTANT
– To avoid any corrosion or damage, protect the areas on which fuel is likely to run.
– To prevent impurities from entering the circuit, place protective plugs on all fuel circuit components exposed to the open air.

Preparations:
Weigh an empty **1300 ml** plastic cup **(part no. 77 11 171 413)** with its cover **(part no. 77 11 171 416)** using electronic scales similar to those used in body paint workshops (example: **PANDA part no. 77 11 224 995**). Record the weight of the empty plastic cup.
This type of plastic cup is used to prepare paint.

Take a **1 l** fuel sample from the **diesel filter outlet** (see **MR 341, 364, 355 or 404, Mechanical, 19C, Tank, Fuel tank: Draining**) using a pneumatic transfer pump (**part no. 634-200**), and place it in the **1300 ml** plastic cup. Cover the plastic cup with its cover and let the fuel settle for approximately **2 minutes**.

Is the fuel cloudy or does it separate into two parts?

YES → The diesel fuel contains water and is not compliant.
Drain the fuel circuit, including the tank (see **MR 341, 364, 355 or 404, Mechanical, 19C, Tank, Fuel tank: Draining**).

NO → A

GETtheMANUALS.org

TEST12 CONTINUED 1	

A

Weigh the diesel fuel and note the fuel weight after subtracting the weight of the empty plastic cup and its cover.
Does the fuel weight fall between the minimum and maximum weights given in the table below?

Calculated weight (g.)		Fuel temperature (˚C)
Min. weight	Max. weight	
821	846	13
821	846	14
820	845	15
819	844	16
819	844	17
818	843	18
817	842	19
816	841	20
816	841	21
815	840	22
814	839	23
814	839	24
813	838	25

Check the fuel temperature by immersing a thermometer in the plastic cup.

YES → B

NO → C

GETtheMANUALS.org

TEST12 CONTINUED 2	

B
YES

End of test.

C
NO

The fuel is not correct.
If the fuel weight is less than the minimum value then there is petrol in the diesel fuel.
If the fuel weight is greater than the maximum value then there is oil in the diesel fuel.
Drain the fuel circuit, including the tank (see **MR 341, 364, 355 or 404, Mechanical, 19C, Tank, Fuel tank: Draining**).

Note:
If the measured weight reaches the limit values, the measurement can be performed with a **2230 ml** plastic cup (**part no. 77 11 171 414**) and its cover (**part no. 77 11 171 417**):
– Carry out a quick test drive in order to mix the fuel, then remove **2 l** of fuel.
– Perform the test again and check the results by multiplying the limit values by 2.

Contact the Techline if you have doubts or problems with the customer.

GETtheMANUALS.org

Injection computer	128-track
Injector	**0.33 Ω** at + **20˚C** / **2 Ω** max
Flow regulator (high pressure pump)	**R = 3 Ω** at + **20˚C**
Engine speed sensor	**R = 235 Ω ± 35** at + **23˚C** (on G9)
Engine speed sensor	**R = 800 Ω ± 80** at + **20˚C** (on F9)
Camshaft sensor	Hall effect sensor
Rail pressure sensor	Bolted onto rail
Pressure limiter (on pump CP3)	Start of opening ~ **1450 bar**, maximum opening at **1650 bar** (bolted onto rail)
Turbocharging pressure relief solenoid valve	**15.4 Ω ± 0.7** at + **20˚C** (PIERBURG type) **16.5 Ω ± 1.6** at + **25˚C** (BITRON type)
Swirl flap solenoid valve	**46 Ω ± 3** at + **25˚C**
Damper valve solenoid valve	**46 Ω ± 3** at + **25˚C**
Accelerator pedal sensor	R gang 1 = **1200 Ω ± 480** R gang 2 = **1700 Ω ± 680**
Air temperature sensor	**R = 3714 Ω ± 161** at + **10˚C** / **2448 Ω ± 90** at + **20˚C** / **1671 Ω ± 59** at + **30˚C**
Diesel fuel temperature sensor	**R = 3820 Ω ± 282** at + **10˚C** / **2050 Ω ± 100** at + **25˚C** / **810 Ω ± 47** at + **50˚C**
Engine coolant temperature sensor	**R = 2252 Ω ± 112** at **25˚C** / **811 Ω ± 39** at **50˚C** / **283 Ω ± 8 at 80˚C**
Air flowmeter	Track 1: air temperature signal Track 2: - flowmeter Track 3: **+ 5 V** flowmeter Track 4: **+ 12 V** battery Track 5: air flow signal Track 6: **earth**
Exhaust gas recirculation valve (Pierburg)	R between tracks 1 and 5 (coil) = **8 Ω ± 0.5** at + **20˚C** R between tracks 2 and 4: **2400 Ω** at **5600 Ω**, at + **20˚C** R between tracks 2 and 6: **1900 Ω** at **6400 Ω**, at + **20˚C** R between tracks 4 and 6: **800 Ω** at **3800 Ω**, at + **20˚C**
Exhaust gas recirculation valve (Cooper)	R between tracks 1 and 5 (coil) = **8 Ω ± 0.5** at + **20˚C**
Heater plug	**R = 0.4 Ω** to **0.9 Ω** Maximum current drawn: **28 A** at **0 sec / 12 A** at **10 sec / 7 A** after **30 seconds**
Thermoplungers	**R = 0.45 Ω ± 0.05** at + **20˚C**

(R = Resistance)

GETtheMANUALS.org

VEL SATIS

1 Engine and peripherals

13B DIESEL INJECTION

EDC16 Injection
Program No.: C1
Vdiag No.: 08, 10, 14

Fault finding - Introduction	13B - 2
Fault finding - Cleanliness guidelines	13B - 7
Fault finding - System operation	13B - 9
Fault finding - Allocation of computer tracks	13B - 17
Fault finding - Replacement of components	13B - 19
Fault finding - Fault summary table	13B - 25
Fault finding - Interpretation of faults	13B - 29
Fault finding - Conformity check	13B - 135
Fault finding - Status summary table	13B - 181
Fault finding - Interpretation of statuses	13B - 183
Fault finding - Parameter summary table	13B - 213
Fault finding - Command summary table	13B - 217
Fault finding - Interpretation of parameters	13B - 219
Fault finding - Interpretation of commands	13B - 223
Fault finding - Customer complaints	13B - 245
Fault finding - Fault Finding Chart	13B - 246
Fault finding - Tests	13B - 262

V11 **Edition Anglaise**

"The repair procedures given by the manufacturer in this document are based on the technical specifications current when it was prepared.

The procedures may be modified as a result of changes introduced by the manufacturer in the production of the various component units and accessories from which his vehicles are constructed."

All rights reserved by Renault s.a.s.

Copying or translating, in part or in full, of this document or use of the service part reference numbering system is forbidden without the prior written authority of Renault s.a.s.

© Renault s.a.s. 2012

GETtheMANUALS.org

1. SCOPE OF THIS DOCUMENT

This document presents the fault finding procedure applicable to all computers with the following specifications:

Vehicle(s): ***Vel Satis phase 1 and phase 2, Laguna II phase 1 and phase 2.***

Engine type and suffix: **G9T600, 606**

Function concerned: **Diesel injection**

Computer name: **BOSCH EDC16 C3**

PROGRAM No.: **C1**

Vdiag No.: **08, 10, 14**

2. PREREQUISITES FOR FAULT FINDING

Documentation type

Fault finding procedures (this document):
– Assisted fault finding (integrated into the diagnostic tool), Dialogys.

Wiring Diagrams:
– Visu-Schéma (CD-ROM), paper.

Type of diagnostic tools

– **CLIP + multiplex line sensor**

Special tooling required

Special tooling required		
	Multimeter	
	Elé. 1674	**Clip + CAN probe**
	Elé. 1590	**Computer connection bornier**
Or	**Elé. 1681**	**Universal bornier**

3. REMINDERS

Procedure

To save energy, the **UCH** of **LAGUNA II phase 2 and VELSATIS phase 2 interrupts the + after ignition feed after 3 minutes**.

To run fault finding on a computer, it is possible to force the + after ignition feed on for 1 hour by applying the following procedure:
– press the unlocking button on the card,
– insert the card in the reader,
– press the Start button (interrupting the timed + after ignition feed mode),
– press and hold the start button for over 5 seconds until the engine immobiliser warning light starts to flash rapidly (4 Hz).

This forced + after ignition feed mode remains on for 1 hour.
Pressing the Start button or removing the card from the card reader cuts off the + after ignition feed but does not cut off the forced after ignition feed timed mode. Until one hour has elapsed, activating the + after ignition feed will restart forced + after ignition feed for the remaining time.

GETtheMANUALS.org

Faults

Faults are declared present or stored (depending on whether they appeared in a certain context and have disappeared since, or whether they remain present but are not diagnosed within the current context).

The **present** or **stored** status of the faults should be considered when the diagnostic tool is switched on after the + after ignition feed is switched on (with no system components being active).

For a **present fault**, apply the procedure described in the **Interpretation of faults** section.

For a **stored fault**, note the faults displayed and apply the **Notes** section.

If the fault is **confirmed** when the instructions are applied, the fault is present. Deal with the fault

If the fault is **not confirmed**, check:
- the electrical lines which correspond to the fault,
- the connectors for these lines (for oxidation, bent pins, etc.),
- the resistance of the component detected as faulty,
- the condition of the wires (melted or split insulation, wear).

Conformity check

The aim of the conformity check is to check data that does not produce a fault on the diagnostic tool because the data is inconsistent. Therefore, this stage is used to:
- carry out fault finding on faults that do not have a fault display, and which may correspond to a customer complaint.
- check that the system is operating correctly and that there is no risk of a fault recurring after repairs.

This section gives the fault finding procedures for statuses and parameters and the conditions for checking them.

If a status is not behaving normally or a parameter is outside the permitted tolerance values, consult the corresponding fault finding page.

Customer complaints - Fault finding chart

If the test with the diagnostic tool is OK but the customer complaint is still present, the fault should be processed by **Customer complaints**.

A synopsis of the general procedure to follow is provided on the following page in the form of a flow chart.

GETtheMANUALS.org

4. FAULT FINDING PROCEDURE

* **Check the battery charge, the condition of the fuses and** the level in the tank.

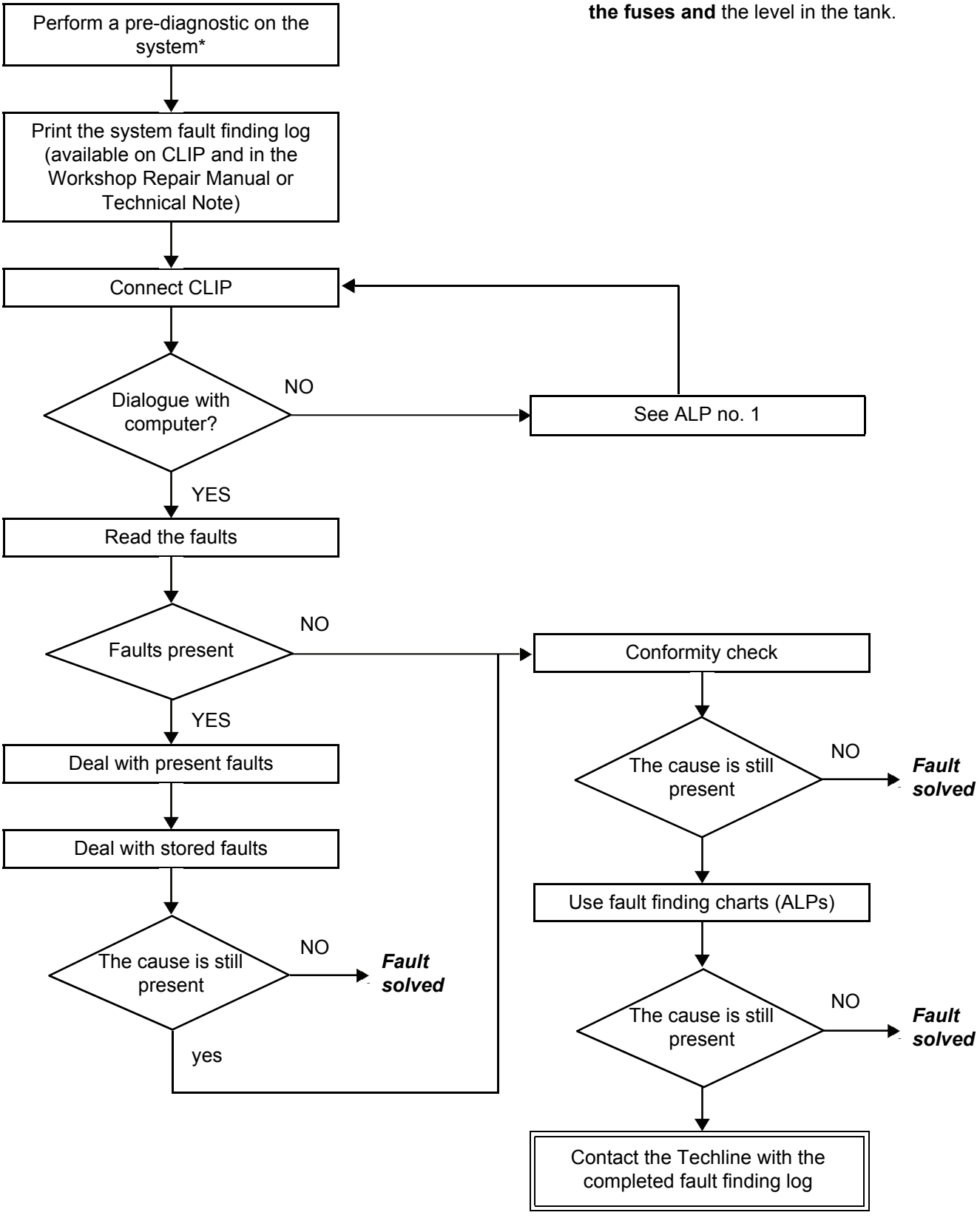

GETtheMANUALS.org

4. AULT FINDING PROCEDURE (continued)

Wiring check

Fault finding problems
Disconnecting the connectors and/or handling the wiring harness may temporarily remove, the cause of a fault.
Electrical measurements of voltage, resistance and insulation are generally correct, especially if the fault is not present when the analysis is made (stored fault).

Visual inspection
Look for damage under the bonnet and in the passenger compartment.
Carefully check the fuses, insulators and wiring harness routing.
Look for signs of oxidation.

Tactile inspection
While manipulating the wiring harness, use the diagnostic tool to note any change in fault status from stored to present.
Make sure that the connectors are properly locked.
Apply light pressure to the connectors.
Twist the wiring harness.
If there is a change in status, try to locate the source of the fault.

Inspection of each component
Disconnect the connectors and check the appearance of the clips and tabs, as well as the crimping (no crimping on the insulating section).
Make sure that the clips and tabs are properly locked in the sockets.
Check that no clips or tabs have been dislodged during connection.
Check the clip contact pressure using an appropriate model of tab.

Resistance check
Check the continuity of entire lines, then section by section.
Look for a short circuit to earth, to **+ 12 V** or with another wire.

If a fault is detected, repair or replace the wiring harness.

GETtheMANUALS.org

5. FAULT FINDING LOG

IMPORTANT

IMPORTANT
Any fault on a complex system requires thorough fault finding with the appropriate tools. The FAULT FINDING LOG, which should be completed during the procedure, enables you to keep track of the procedure which is carried out. It is an essential document when consulting the manufacturer.

IT IS THEREFORE ESSENTIAL THAT THE FAULT FINDING LOG IS FILLED OUT EVERY TIME IT IS REQUESTED BY TECHLINE OR THE WARRANT RETURNS DEPARTMENT.

You will always be asked for this log:

- when requesting technical assistance from Techline,
- for approval requests when replacing parts for which approval is mandatory,
- to be attached to monitored parts for which reimbursement is requested. The log is needed for warranty reimbursement, and enables better analysis of the parts removed.

6. SAFETY INSTRUCTIONS

Safety rules must be observed during any work on a component to prevent any damage or injury:

– check the battery voltage to avoid incorrect operation of computer functions,
– Use the proper tools.

7. CLEANLINESS ADVICE TO FOLLOW WHEN CARRYING OUT OPERATIONS ON THE HIGH PRESSURE DIRECT INJECTION SYSTEM

Risks relating to contamination

The system is highly sensitive to contamination. The risks associated with contamination are:

– damage to or destruction of the high pressure injection system and the engine,
– a component seizing or leaking.

All After-Sales operations must be performed under very clean conditions. This means that no impurities (particles a few microns in size) should be allowed to penetrate the system during dismantling or get into the circuits via the fuel unions.

The cleanliness principle must be applied from the filter to the injectors.

GETtheMANUALS.org

I - RISKS ASSOCIATED WITH CONTAMINATION

The high pressure direct injection system is highly sensitive to contamination. The risks associated with contamination are:
- damage to or destruction of the high pressure injection system,
- components jamming,
- components losing seal integrity.

All After-Sales operations must be performed under very clean conditions. This means that no impurities (particles a few microns in size) should have entered the system during dismantling.

The cleanliness principle must be applied from the filter to the injectors.

What are the sources of contamination?

- metal or plastic chips,
- paint,
- fibres:
  - from cardboard,
  - from brushes,
  - from paper,
  - from clothing,
  - from cloths,
- foreign bodies such as hair,
- ambient air
- etc.

IMPORTANT
Cleaning the engine using a high pressure washer is prohibited because of the risk of damaging connections. In addition, moisture may collect in the connectors and create electrical connection faults.

II - NOTES TO BE FOLLOWED BEFORE ANY OPERATION

IMPORTANT
Before any work is carried out on the high-pressure injection system, protect:
- the accessories and timing belts,
- the electrical accessories, (starter, alternator, electric power assisted steering pump),
- the flywheel surface, to prevent any diesel from running onto the clutch friction plate.

Check that you have plugs for the unions to be opened (set of plugs available from the Parts Department). The plugs are single-use only. After use, they must be discarded (once used they are soiled and cleaning is not sufficient to make them reusable). Unused plugs must be discarded.

GETtheMANUALS.org

Check that you have hermetically resealable plastic bags for storing removed parts. Stored parts will therefore be less subject to the risk of impurities. The bags are to be used once only, and discarded after use.

Use lint-free cleaning cloths (cloth part number **77 11 211 707**). Using normal cloth or paper is prohibited. They are not lint-free and could contaminate the fuel circuit. Each cloth should only be used once.

Use fresh cleaning agent for each operation (used cleaning agent is contaminated). Pour it into an uncontaminated container.

For each operation, use a clean brush in good condition (the brush must not shed its bristles).

Use a brush and cleaning agent to clean the unions to be opened.

Blast compressed air over the cleaned parts (tools, workbench, the parts, unions and injection system zones). Check that no bristles remain.

Wash your hands before and during the operation if necessary.

When wearing leather protective gloves cover them with latex gloves to prevent contamination.

III - INSTRUCTIONS TO BE FOLLOWED DURING THE OPERATION

As soon as the circuit is open, all openings must be plugged to prevent impurities from entering the system. The plugs to be used are available from the Parts Department. The plugs must not be reused under any circumstances.

Seal the pouch shut, even if it has to be opened shortly afterwards. Ambient air carries contamination.

All components removed from the injection system must be stored in a hermetically sealed plastic bag once they have been plugged.

Using a brush, cleaning agent, air gun, sponge or normal cloth is strictly prohibited once the circuit has been opened. These items could allow contamination to enter the system.

A new component replacing an old one must not be removed from its packaging until it is to be fitted to the vehicle.

GETtheMANUALS.org

System outline

The high pressure injection system is designed to deliver a precise quantity of diesel fuel to the engine at a set moment.

It is fitted with a **112-track BOSCH EDC16 C3 type computer**.

The system comprises:
- a priming bulb on the low pressure circuit,
- a diesel filter,
- a high pressure pump with a built-in low pressure pump (transfer pump),
- a high pressure regulator mounted on the pump,
- an injector rail,
- a diesel fuel pressure sensor built into the rail,
- four solenoid injectors,
- a diesel fuel temperature sensor,
- a coolant temperature sensor,
- a cylinder reference sensor,
- an engine speed sensor,
- a turbocharger pressure sensor,
- an accelerator pedal potentiometer,
- an exhaust gas recirculation valve,
- an atmospheric pressure sensor integrated into the injection computer,
- an air flowmeter with an air temperature sensor,
- a turbocharging pressure limitation solenoid valve,
- a damper valve,
- a particle filter,
- a particle filter differential pressure sensor,
- a particle filter upstream temperature sensor,
- a particle filter downstream temperature sensor (except Velsatis phase 2 vdiag 14).

The **Common rail** direct high pressure injection system works sequentially (based on the petrol engine multipoint injection function).

This injection system reduces operating noise, reduces the volume of pollutant gases and particles and produces high engine torque at low engine speeds thanks to a pre-injection procedure.
The high pressure pump generates the high pressure and transmits it to the injector rail. The actuator located on the pump controls the quantity of diesel fuel supplied, according to the request determined by the computer. The rail supplies each injector through a steel pipe.

GETtheMANUALS.org

a) The computer:

Determines the value of injection pressure necessary for the engine to operate correctly and then controls the pressure regulator.
Checks that the pressure value is correct by analysing the value transmitted by the pressure sensor located on the rail.
It determines the injection timing required to deliver the right quantity of diesel fuel and the moment when injection should start. Controls each injector electrically and individually after determining these two values.

The flow injected into the engine is determined by:
- the duration of injector control,
- the rail pressure (regulated by the computer),
- the injector opening and closing speed,
- the needle stroke (determined by a constant for the type of injector),
- the nominal hydraulic flow of the injector (specific to each injector).

The computer manages:
- idling regulation,
- exhaust gas flow reinjection to the inlet (EGR),
- fuel supply check (advance, flow and rail pressure),
- the fan assembly control,
- the air conditioning (cold loop function),
- the cruise control/speed limiter function,
- pre-post heating control,
- fault warning lights via the multiplex network.
- the operation of the catalysed particle filter.

The high pressure pump is supplied at low pressure by an integrated low pressure pump (transfer pump).
It supplies the rail, the pressure of which is controlled by the fuel flow actuator (MPROP) for charging, and for discharging by the injector valves. This compensates for pressure drops.
The flow actuator allows the high pressure pump to supply the exact quantity of diesel fuel required to maintain the pressure in the rail. This component minimises the heat generated and improves engine output.
In order to discharge the rail using the injector valves, the valves are controlled by brief electrical pulses which are:
- short enough not to open the injector (passing through the feedback circuit from the injectors),
- long enough to open the valves and discharge the rail.

GETtheMANUALS.org

b) Multiplex connection between the different vehicle computers.

The electronic system fitted in this vehicle is multiplexed.
This enables dialogue between the various vehicle computers. As a result:
- the fault warning lights on the instrument panel are lit by the multiplex network,
- vehicle faults are displayed by the multiplex network,
- the vehicle speed sensor on the gearbox is not needed.

The vehicle speed signal on the instrument panel is transmitted by the ABS computer via a wire connection, then sent out on the multiplex network by the instrument panel. The vehicle speed signal is used mainly by the injection computer and the airbag computer.

Some vehicles have adopted a sensor for detecting water in the diesel fuel, located in the filter. If there is water in the diesel fuel, the orange "Injection and pre-post heating" warning light will come on.

WARNING
The engine must not operate with:
- Diesel fuel containing more than 10 % diester,
- petrol, even in tiny quantities.

The system can inject diesel fuel into the engine at a pressure of up to **1600 bar**. Before each operation, check that the injector rail is depressurised and that the fuel temperature is not too high.

You must respect the cleanliness guidelines and safety advice specified in this document for any work on the high pressure injection system.
Removal of the internal parts of the pump and injectors is prohibited. Only the flow actuator, the diesel temperature sensor and the Venturi tube can be replaced.

For safety reasons, it is strictly prohibited to undo a high pressure pipe union when the engine is running.
It is not possible to remove the pressure sensor from the fuel rail because this may cause circuit contamination faults.
If the pressure sensor is faulty it must be replaced, along with the rail and the high pressure pipes.

It is strictly forbidden to remove any injection pump pulley bearing the number **070 575**. If the pump needs to be replaced, replace the pulley.
Supplying **+ 12 V** directly to any component in the system is prohibited.

Ultrasonic decoking and cleaning are prohibited.

Never start the engine unless the battery is connected correctly.
Disconnect the injection computer when carrying out any welding work on the vehicle.

GETtheMANUALS.org

c) Hosted functions:

Air conditioning management assistance:

In the case of vehicles with climate control, the EDC16 system has the option of deactivating the air conditioning via the UCH, under certain conditions of use:
- when requested by the driver,
- when starting the engine,
- if the engine overheats (in order to reduce the power the engine has to supply),
- when the engine speed is kept at a very high level (to protect the compressor),
- during transition phases (eg. high acceleration demand for overtaking, anti-stalling and moving off). These conditions are only taken into account if they do not occur repeatedly, so as to prevent system instabilities (erratic deactivation),
- when certain faults appear.

Management of the damper valve:

The damper valve currently has three functions:
- the valve closes in order to block the passage of air towards the cylinders to shut off the engine. The aim of this is to stop the engine as quickly as possible and to reduce instabilities as the engine is switched off.
- regulator valve: depending on the various engine functions, the damper valve closes by a few % in order to create a venturi effect in the EGR valve flow section. The aim of this is to accelerate the EGR gas flow rate and to reduce the emission of pollutants.
- regulatory function during the regeneration of the particle filter.

Thermoplunger management:

This vehicle is fitted with thermoplungers. They are managed and activated by the injection system. There are two types of program:
- controlled by the injection system during particle filter regeneration;
- passenger compartment function; the air conditioning requests the injection to activate one or more thermoplungers to raise the air temperature in the passenger compartment. The injection computer authorises the actuation or non-actuation of the thermoplungers according to the operating phases and the power requirements of the engine. The maximum number of thermoplungers that can be managed is four; their actuation depends mainly on the coolant temperature (< 15°C) and ambient air temperature (< 5°C).

GETtheMANUALS.org

Cruise control/speed limiter management:
The vehicle cruise control function, when activated, allows you to keep the vehicle speed at a selected value regardless of the driving conditions encountered.
Using the control buttons, the driver can increase or reduce the speed of the vehicle.

If the driver wishes to exceed the cruising speed, he may:
- depress the accelerator pedal and exceed the cruising speed (the vehicle will return to the initial cruising speed once the driver takes his foot off the pedal),
- press the system control buttons.

The cruise control function can be deselected either by:
- the system control buttons,
- deactivating the cruise control switch,
- when system events are detected, such as the brake pedal or clutch being depressed,
- when system errors are detected such as an inconsistent vehicle speed.

The cruise function can also be temporarily disabled when the driver wants to increase speed by depressing the accelerator pedal. The cruising speed is resumed when the driver releases the accelerator pedal.
The vehicle will attempt to reach the cruising speed at a controlled acceleration rate.

It is possible to reactivate the vehicle speed control and resume the last cruising speed after deactivation (computer feed not cut off).

When activated (using the selection switch) the vehicle speed limiter function limits the vehicle speed to a preselected value. The driver controls the vehicle in the normal way using the accelerator pedal until the limit speed is reached.

If an attempt is made to exceed this speed, the system ignores the pedal request and controls the vehicle speed in the same way as the cruise control function, provided that the driver keeps the accelerator pedal sufficiently depressed.
As with cruise control, the limit speed can be altered using the one-touch control buttons or by pressing and holding.

For safety reasons, it is possible to exceed the limit speed by depressing the accelerator pedal and exceeding the pedal position limit value. The vehicle speed is then totally controlled as a function of pedal position until the speed falls back below the limit speed when the speed limiter function will once again be reactivated.

If the driver wishes to exceed the cruising speed, he may:
- exceed the accelerator pedal's kickdown point,
- increase the limit speed by pressing or pressing and holding the limit speed switch.

The speed limiter function can be deselected either:
- the system control buttons,
- by switching off the speed limiter switch,
- when system events are detected, such as the brake pedal or clutch being depressed,
- when system errors are detected such as an inconsistent vehicle speed.

GETtheMANUALS.org

Exhaust gas recirculation management

The exhaust gas recirculation system comprises a direct current EGR valve controlled by an H bridge in the computer. This system has a built-in valve position feedback potentiometer.
The EGR valve is controlled in a closed loop on the change in the air flow measured by the flow sensor.
The potentiometer is used in the fault finding procedure for the EGR valve position.
An EGR by-pass is used to cool the exhaust fumes before they are redirected to the inlet, when the engine coolant temperature permits.

Particle filter management

The particle filter eliminates the emission of carbon particles, up until now, not removed from the exhaust fumes.

The particle filter is a porous structure containing channels arranged so as to force-filter the exhaust gases.

The particle filter consists of several components:
- an oxidation pre-catalytic converter after the turbocharger to achieve the HC/CO levels of the current standards,
- the particle filter located under the body,
- a differential pressure sensor to tell the computer the pressure upstream and downstream of the particle filter,
- a temperature sensor upstream and downstream of the particle filter (except VELSATIS phase 2 Vdiag 14 which is not fitted with a temperature sensor downstream of the particle filter).

While driving the particle filter fills with particles (soot) and, above a given mass of soot, it is necessary to clean it by the principle of regeneration.

This regeneration consists of burning the particles accumulated in the filter.

The differential pressure sensor informs the computer about the weight of the soot contained in the particle filter.

The computer then orders the regeneration. The engine combustion is then delayed to raise the exhaust gas temperature to between **550 and 650°C**.
This temperature allows the particles to be burned and the particle filter to be regenerated.

Regeneration may be automatically triggered when driving if the soot content is below:
- **45 g for Vdiag 08 and 10,**
- **48 g for Vdiag 14.**

If the weight of soot is greater than **45 g for Vdiag 08 and 10, or 48 g for Vdiag 14**, or if regeneration could not be carried out when driving, the user should request **After-Sales regeneration**.

This regeneration is carried out in the workshop. It is essential to follow the instructions given in the interpretation of the command (**SC017 Particle filter regeneration**) to carry out regeneration in complete safety (see **Technical Note 5040A**).

IMPORTANT
The particle filter must be replaced after a period of time which largely depends on the grade of engine oil used - this information is in the Driver's handbook.

After it has been replaced, it is essential to reconfigure certain parameters in the computer (see **SC036 Reinitialise programming**).

GETtheMANUALS.org

Warning light management:

Instrument panel display
The computer manages the data display on the instrument panel relating to engine operation. This involves six functions:
- the pre-postheating warning light,
- the coolant temperature warning light or warning message;
- the fault level 1 warning light (non-critical fault),
- the fault level 2 warning light (emergency stop),
- the OBD warning light (European On Board Diagnostic),
- particle filter warning message or light.

These six functions are represented by 4 or 5 warning lights and/or messages displayed by the trip computer.

A **3-second** visual inspection (automatic test procedure managed by the instrument panel) is carried out by the injection computer when the ignition is switched on.

Orange pre-post heating/non-critical fault SERVICE warning light (severity 1)
This light is used both as an in-operation indicator light and as a system fault indicator:
- Continuously lit with + after ignition feed:

Indicates preheating of the spark plugs.
- Continuously lit with **CHECK INJECTION or ELECTRONIC FAULT**:

Indicates a **level 1** fault (implies operation in injection system defect mode).
The driver should carry out repairs as soon as possible.

Temperature/red emergency STOP (level 2) warning light
This indicator light is used both as an in-operation indicator light and as a system fault warning light. Lights up for **3 seconds** when the ignition is switched on (automatic test procedure managed by the instrument panel):
- Continuously lit **or** alternately lit with **ENGINE OVERHEATING** message:

Indicates engine overheating (the driver is free to choose whether or not to stop the vehicle).
- Continuously lit with the **FAULTY INJECTION** message:

Indicates a **level 2** fault (In this case, the injection is automatically cut after a few seconds).
The driver should carry out repairs as soon as possible.

ORANGE OBD excess pollution warning light
An engine symbol accompanied by the message **CHECK EMISSION CONTROL**.
This warning light comes on if the system has one or more OBD faults.
This warning light is used to alert the driver of the existence of injection faults leading to excessive pollution or if the EOBD (European On Board Diagnostic) system is deactivated.
The injection computer requests activation of the OBD warning light for a present fault only after three successive driving cycles.
The **3 second** visual inspection when the ignition is switched on (automatic test procedure managed by the instrument panel) is carried out by the injection computer.

Special particle filter ORANGE warning light or warning message (depending on instrument panel)
This warning light or message warns the driver that the particle filter is full of particles (weight of soot greater than **40 g for Vdiag 08 and 10, or 42 g for Vdiag 14**, or that there are too many regeneration faults due to driving conditions which are unfavourable for regeneration). The driver must then drive as soon as possible at an average speed of 48 mph (80 km/h) subject to the road conditions and authorised speed limits.

WARNING

This warning light does not exist on the **LAGUNA II phase 1 and VELSATIS phase 1**.

This warning light is replaced by a **Regenerate particle filter** message displayed by the trip computer.

GETtheMANUALS.org

Management of the EOBD:

The **OBD (On Board Diagnostic)** system permits detection of any faults relating to the vehicle emission control system (OBD EURO IV emission control standards being exceeded).
This system should be active for the entire life of the vehicle.

1. OBD fault display conditions

An OBD fault will be detected after **3 driving cycles** and the following parameters will be registered in the computer:
- engine load,
- vehicle speed
- air temperature
- coolant temperature,
- turbocharging pressure,
- rail pressure,
- air flow,
- distance travelled in miles by the vehicle since activation of the **OBD** warning light.

It allows the driver to know whether the vehicle has a fault directly linked to the emission control system.

2. System faults displayed by the OBD

Only a few faults are indicated by the OBD system:
- **DF012 Sensor feed voltage no. 2.**
- **DF038 Computer in 6.DEF EEPROM fault.**
- **DF040 Cylinder 1 injector circuit in CO Open circuit.**
- **DF041 Cylinder 2 injector circuit in CO Open circuit.**
- **DF042 Cylinder 3 injector circuit in CO Open circuit.**
- **DF043 Cylinder 4 injector circuit in CO Open circuit.**
- **DF054 Turbocharging solenoid valve control circuit in CC.0 Short circuit to earth.**
- **DF209 EGR valve position sensor circuit.**
- **DF621 EGR valve jammed open.**

Some repair operations require programming to ensure that certain engine components function correctly. Follow the programming procedures (see Replacement of components), if replacing an exhaust gas recirculation valve or an injector.

3. OBD fault clearing conditions

An OBD fault is cleared in several steps.
The fault **present** in the diagnostic tool is not **stored** (following repair) until after 3 trips with the vehicle.
The OBD warning light will only light up after these 3 driving cycles.
The instrument panel warning light coming on does not automatically mean that the system has a fault.
In order that the OBD fault and the display parameters are cleared from the computer, the system needs to go through 40 engine heating cycles.
An engine heating cycle is a driving cycle during which:
- **the engine coolant temperature reaches at least 71.1°C,**
- **the engine coolant temperature varies by 22.2°C in relation to the engine starting temperature.**

If one of these conditions is not fulfilled, the OBD fault will still be present or stored on the injection computer.

GETtheMANUALS.org

1 - Black 32-track connector A

Track	Description
A1	Not used
A2	Cruise control on/off switch
A3	Passenger compartment multiplex network L1 signal
A4	Passenger compartment multiplex network H1 signal
B1	Air conditioning cut-off control
B2	Engine speed signal
B3	Not used
B4	K line diagnostic socket output
C1	Not used
C2	Not used
C3	Speed limiter on/off switch
C4	Clutch contact input
D1	Fuse protected + after ignition feed
D2	Cruise control programming control
D3	Cruise control programming feedback signal
D4	Fuel flow signal
E1	Not used
E2	Air conditioning cycle control
E3	Heated windscreen activation signal
E4	Normally-closed brake switch input
F1	Not used
F2	Accelerator potentiometer load 2 supply
F3	Accelerator potentiometer load 2 signal
F4	Accelerator potentiometer load 2 earth
G1	Injection computer feed voltage relay + after ignition feed
G2	Accelerator potentiometer load 1 supply
G3	Not used
G4	Battery earth
H1	Battery earth
H2	Accelerator potentiometer load 1 signal
H3	Accelerator potentiometer load 1 earth
H4	Battery earth

2 - Brown 48-track connector B

Track	Description
A1	Camshaft sensor earth (cylinder 1 reference) and particle filter upstream temperature sensor
A2	Additional heating fault finding signal
A3	Not used
A4	Fuel rail pressure sensor feed
B1	TDC sensor feed signal (engine speed)
B2	Damper valve fault finding
B3	Not used
B4	Air flow sensor feed
C1	TDC sensor earth signal (engine speed)
C2	EGR valve motor supply signal
C3	Engine multiplex line H2 network signal (automatic gearbox)
C4	Fuel rail pressure sensor earth
D1	Camshaft sensor signal (cylinder reference 1)
D2	EGR valve motor earth signal
D3	Engine multiplex line L2 network signal (automatic gearbox)
D4	Turbocharger pressure sensor earth
E1	Injection supply main relay control
E2	Air temperature and air flow sensor earth signal
E3	Not used
E4	Not used
F1	Not used
F2	Coolant temperature sensor feed signal
F3	Not used
F4	EGR valve position potentiometer feed
G1	Air flow sensor feed signal
G2	Air temperature signal
G3	Fuel rail pressure sensor signal
G4	Turbocharging pressure sensor and particle filter differential pressure sensor feed
H1	Coolant temperature sensor earth
H2	Fuel temperature signal
H3	Particle filter upstream temperature sensor signal
H4	Not used

GETtheMANUALS.org

2 - Brown connector B, 48-track (continued)

Track	Description
J1	Not used
J2	EGR valve position potentiometer signal
J3	Not used
J4	Damper valve solenoid valve control
K1	Not used
K2	Turbocharger pressure sensor signal
K3	Particle filter sensor signal (except VELSATIS phase 2 Vdiag 14)
K4	Heating element no. 1 relay control
L1	Not used
L2	Not used
L3	EGR by-pass solenoid valve control
L4	Flow sensor earth
M1	Swirl flap - control (except VELSATIS phase 2 Vdiag 14)
M2	Injection computer feed voltage relay + after ignition feed
M3	Heating element no. 3 relay control
M4	Fuel pressure regulation solenoid valve control (fuel flow actuator)

3 - grey connector C, 32-track

Track	Description
A1	Heating element no. 2 relay control
A2	Water in diesel detection sensor signal Alternator charge signal
A3	Preheating unit diagnostic signal
A4	Fan unit relay 1 - control
B1	Particle filter differential pressure sensor signal.
B2	Brake switch input (closed)
B3	Not used
B4	Fuel low pressure pump relay control
C1	EGR valve position potentiometer earth
C2	Not used
C3	Not used
C4	Not used
D1	Not used
D2	Not used
D3	Not used
D4	Turbocharging pressure solenoid valve control
E1	Preheating unit control
E2	Particle filter downstream temperature
E3	sensor earth (except VELSATIS phase 2 Vdiag 14)
E4	Turbocharger upstream temperature sensor feed
F1	Fuel temperature earth
F2	Fan unit relay 2 control
F3	Particle filter differential pressure sensor earth.
F4	Not used
G1	Injector 4 feed
G2	Injector 2 feed
G3	Injector 1 control
G4	Injector 2 control
H1	Injector 1 feed
H2	Injector 3 feed
H3	Injector 4 control
H4	Injector 3 control

GETtheMANUALS.org

COMPUTER REPLACEMENT OR REPROGRAMMING

IMPORTANT
- **Switch on the diagnostic tool (mains or cigarette lighter supply).**
- **Connect a battery charger.**
- **Switch off all electrical consumers (lights, interior lights, air conditioning, radio/CD, etc.).**
- **Wait for the engine to cool (engine coolant temperature < 60 °C and air temperature < 50 °C).**
- During (re)programming, the instrument panel screen may display **OIL PRESSURE FAULT**. Ignore this message and do not take any action in connection with it.

Two operations must be performed when replacing or reprogramming the computer:
SC003 Save computer data and SC001 Write saved data.
- Run command **SC003 before replacing or reprogramming** the computer. This enables certain data to be saved **in the diagnostic tool** so that the new computer* can be reconfigured like the old one. The saved data includes: injector codes, EGR programming, specific data for particle filter operation and vehicle options.
- Run command **SC001 after replacing or reprogramming** the computer. It enables you to rewrite the data (saved by command **SC003**) to the new computer*.

If you cannot establish dialogue with the computer being replaced: you will not be able to save anything.
After replacing the computer:
- Manually enter the IMA code for each injector by reading the injector codes (see **REPLACING INJECTORS**).
- Enter the data specific to particle filter operation by running **SC036 Reinitialise programming** and select **After replacing injection computer with no save option**.

Exhaust gas recirculation valve data is programmed automatically the 1st time the new computer is switched on*.

** New computer or reprogrammed computer.*

GETtheMANUALS.org

PROCEDURE

● **Before replacing or reprogramming the computer:**

– select **SC003 Save computer data**;
– if the following message appears: "**A saved file exists. Overwrite?**": (this file corresponds to the last save carried out on the tool),
– select **YES**,

When the backup is complete, replace the computer or reprogram, then proceed to the next step.

● **After replacing or reprogramming the computer:**

– select **SC001 Write saved data**, then follow the instructions given by the diagnostic tool,
– if the VIN has not been stored (see **Computer Identification** on the main screen), select **VP010 Enter VIN**,

When both these commands have finished:

– **switch off the ignition**, and wait for the following message to appear on the **diagnostic tool: "Loss of dialogue with the computer: EDC16 C3, check the connection of the tool and the computer supply voltage"** before switching the ignition back on,
– check the system faults, and clear any stored faults,
– if there are no stored faults, deal with present faults;
– clear the faults from the computer memory.

Carry out a road test followed by a complete check with the diagnostic tool.

IMPORTANT

– The injection computer retains the same immobiliser code for life.
– The system has no security code.
– It is not permitted to perform tests with computers borrowed from the Parts Department or from another vehicle which must then be returned.
– These computers are hard-coded.
– If the injection computer appears to be faulty, contact the Techline and refer to the fault finding log.

End of operation.

GETtheMANUALS.org

REPLACING THE INJECTORS

Note:
The IMA coding (individual injector correction) is a calibration made in production on **each injector** to **adjust the flow** accurately.
These correction values are etched on the Bakelite body of each injector (6 alphanumeric characters) and then entered into the computer which then controls each injector taking into account their **manufacturing variation**.

After replacing one or more injectors, re-enter the IMA codes.
The system must be configured via the diagnostic socket using the RENAULT CLIP diagnostic tool.

⟶ **PROCEDURE** to be followed **after one or more injectors have been replaced**:

IMPORTANT
Cylinder no. 1 is located **at the engine flywheel end**.
– make a note of the **IMA** code(s) engraved on the injector body,
– enter these codes in the computer using command **SC002 Enter injector codes**, then follow the instructions given by the diagnostic tool,
– once the command has finished,
– switch off the ignition,
– wait for the following message to appear on the **diagnostic tool: "Loss of dialogue with the computer: EDC16 C3, check the connection of the tool and the computer supply voltage"** before switching the ignition back on,
– return to fault finding mode,
– select the **Computer identification** function from the main screen,
– check that the injector codes entered into the computer match those found on the bodies of the injectors:
– if the codes do not match, restart the command **SC002 Enter injector codes** procedure.
– if the codes do match, check system faults and clear any stored faults;
– if there are no stored faults, deal with present faults;
– clear the faults from the computer memory.

Carry out a road test followed by a complete check with the diagnostic tool.

IMPORTANT
Engines can only operate correctly if the correct IMA codes have been entered.
If no codes have been entered or if an invalid code has been entered, fault DF276 Program injector code is present and the engine will be in defect mode (significant engine speed restriction).
If another injector's code has been entered, the system will accept it but will make the wrong correction. This could lead to engine damage, loss of performance and excessive pollution. Always use the correct injector codes for the engine cylinder/computer.

End of operation.

GETtheMANUALS.org

REPLACING THE EXHAUST GAS RECIRCULATION VALVE (EGR valve)

After the exhaust gas recirculation valve has been replaced, the computer must store the new valve's offset and the offset measured the last time the ignition was switched off, which is when the valve closed.
Using this data, the computer can detect whether the valve is clogged or seized.
When the valve is replaced, clear the stored offsets so that the program uses the new valve's offset value.

The data linked to this program is compiled in the **Emission control/OBD** sub-function.
- **PR128:** FIRST EGR VALVE OFFSET.
- **PR129:** LAST EGR VALVE OFFSET > or = **PR128 if the valve is new**.

Programming **PR128** and **PR129** must be cleared every time the exhaust gas recirculation valve is replaced.

⟶ **PROCEDURE** to be followed **after replacing** the exhaust gas recirculation valve:

– run command **SC036 Reinitialise programming**;
– select **EGR valve** as the type of operation, then follow the instructions given by the diagnostic tool,

Note:
When the reinitialisation is complete, the **Emission control/OBD** sub-function displays:
PR128 = PR129 > 100 %

– when the command is finished;
– switch off the ignition,
– wait for the following message to appear on the **diagnostic tool: "Loss of dialogue with the computer: EDC16 C3, check the connection of the tool and the computer supply voltage"** before switching the ignition back on,
When the ignition is next switched on again the new EGR valve offset is automatically reprogrammed.

Note:
When the new EGR valve offset has been reprogrammed, then the **Emission control/OBD** sub-function displays:
10 % < PR128 < 40 %
PR129 > 100 %

– start the vehicle to enable the latest EGR valve offset to be programmed,
– switch off the ignition,
– wait for the following message to appear on the **diagnostic tool: "Loss of dialogue with the computer: EDC16 C3, check the connection of the tool and the computer supply voltage"** before switching the ignition back on.
The last EGR valve offset reprogrammed is stored on the computer.

Note:
When the reprogramming of the last EGR valve offset has been done, then the **Emission control/OBD** sub-function displays:
10 % < PR128 < 40 %
10 % < PR129 < 40 %
and PR129 - PR128 ≥ -1 % and ≤ 5 %

– then check the system faults, and clear any stored faults;
– if there are no stored faults, deal with present faults;
– clear the faults from the computer memory.
Carry out a road test followed by a complete check with the diagnostic tool.

End of operation.

GETtheMANUALS.org

REPLACING THE DAMPER VALVE

After replacing the damper valve, reconfigure the computer.
The system must be configured via the diagnostic socket using the RENAULT CLIP tool.

- **PROCEDURE** to be followed **after the damper valve is replaced**:

– switch on the ignition,
– establish dialogue with the injection computer,
– run command **SC036 Reinitialise programming**;
– select **Damper valve** as the type of operation, then follow the instructions given by the diagnostic tool;
– **switch off the ignition,**
– wait for the following message to appear on the **diagnostic tool: "Loss of dialogue with the computer: EDC16 C3, check the connection of the tool and the computer supply voltage"** before switching the ignition back on,
– check that **PR420 Damper valve error counter = 0**;
– then check the system faults, and clear any stored faults;
– if there are no stored faults, deal with present faults;
– clear the faults from the computer memory.

Carry out a road test followed by a complete check with the diagnostic tool.

End of operation.

REPLACING THE PARTICLE FILTER:

After replacing the particle filter, reconfigure the computer.

The system must be configured via the diagnostic socket using the RENAULT CLIP tool.

- **PROCEDURE** to be followed **after the particle filter is replaced**:

– switch on the ignition,
– run command **SC036 Reinitialise programming**;
– select **After particle filter replacement** as the operation type, then follow the instructions,
– **switch off the ignition and wait** for the following message to appear on the **diagnostic tool: "Loss of dialogue with the computer: EDC16 C3, check the connection of the tool and the computer supply voltage",**
– **then switch on the ignition again,**
– **clear** the faults from the computer memory **(this operation must be carried out within 3 minutes of the ignition being switched on)**.

Carry out a road test followed by a complete check with the diagnostic tool.

End of operation.

GETtheMANUALS.org

Summary of available configuration readings

NOTES	Configuration readings are used to check the status of configurations performed. The configuration readings cannot be changed. The computer is configured as soon as the one of the vehicle's optional system components is operated. In the event of a fault, consult the interpretation of command **RZ005 PROGRAMMING**.

LC009: Air conditioning
WITH OR WITHOUT

LC056: Heating elements
WITH OR WITHOUT

LC065: Water in diesel fuel sensor
WITH OR WITHOUT

LC120: Cruise control
WITH OR WITHOUT

LC121: Speed limiter
WITH OR WITHOUT

GETtheMANUALS.org

WARNING LIGHT MANAGEMENT:
Management of instrument panel warning lights according to the faults notified.

Tool fault	Description	Associated DTC	LEVEL 1 FAULT WARNING LIGHT (Orange heater plugs On indicator light)	LEVEL 2 FAULT WARNING LIGHT (Red overheating warning light)	NO WARNING LIGHT ON	OBD WARNING LIGHT ON
DF001	Coolant temperature sensor circuit	115	CO.1/CC.0	...	...	...
DF003	Atmospheric pressure sensor circuit	105 or 2226	1.DEF/2.DEF/3.DEF	...	...	...
DF004	Turbocharging pressure sensor circuit	235	CO.0/CC.1	...	1.DEF	...
DF005	Engine speed sensor circuit	335	...	1.DEF/2.DEF	...	...
DF007	Rail pressure sensor circuit	190	...	CO.1/1.DEF/2.DEF	CC.0	...
DF008	Pedal potentiometer circuit gang 1	225	CO.0/CC.1/1.DEF	...	...	...
DF009	Pedal potentiometer circuit gang 2	2120	CO.0/CC.1/1.DEF	...	...	...
DF011	Sensor feed voltage no. 1	641	1.DEF/2.DEF	...	...	...
DF012	Sensor feed voltage no. 2	651	1.DEF/2.DEF	...	...	1.DEF/ 2.DEF
DF013	Sensor supply voltage no. 3	697	...	1.DEF/2.DEF	...	...
DF015	Main relay control circuit	685	1.DEF/2.DEF	...	...	...
DF017	Pre-postheating unit control circuit	380	CC.0	...	CC.1/CO/ 1.DEF	...
DF025	Preheating unit diagnostic line	670	X	...	...	...
DF037	Engine immobiliser	C167	...	...	X	...
DF038	Computer	606	5.DEF/13.DEF	1.DEF/2.DEF/ 3.DEF/4.DEF/ 6.DEF/7.DEF/ 8.DEF/10.DEF/ 11.DEF/12.DEF/ 14.DEF	...	6.DEF

GETtheMANUALS.org

Tool fault	Description	Associated DTC	LEVEL 1 FAULT WARNING LIGHT (Orange heater plugs On indicator light)	LEVEL 2 FAULT WARNING LIGHT (Red overheating warning light)	NO WARNING LIGHT ON	OBD WARNING LIGHT ON
DF039	Inlet air temperature sensor circuit	110	...	...	CC.0/CO.1	...
DF040	Cylinder 1 injector circuit	201	CO	CC.1/CC/1.DEF	...	CO
DF041	Cylinder 2 injector circuit	202	CO	CC.1/CC/1.DEF	...	CO
DF042	Cylinder 3 injector circuit	203	CO	CC.1/CC/1.DEF	...	CO
DF043	Cylinder 4 injector circuit	204	CO	CC.1/CC/1.DEF	...	CO
DF046	Battery voltage	560	...	...	1.DEF/2.DEF/ 3.DEF	...
DF047	Computer feed voltage	615	...	...	1.DEF	...
DF050	Brake switch circuit	571	...	...	1.DEF/2.DEF	...
DF051	Cruise control/speed limiter function	575	...	...	1.DEF/2.DEF/ 3.DEF	...
DF053	Rail pressure regulation function	89	3.DEF	CC.0/CC.1/CO/ 1.DEF/ 2.DEF/ 5.DEF/6.DEF/ 7.DEF	4.DEF	...
DF054	Turbocharging solenoid valve control circuit	33	C0/CC.1/CC.0/ 1.DEF	...	...	CC.0
DF055	Turbocharging pressure regulation circuit	243	1.DEF/2.DEF	...	...	...
DF056	Air flowmeter circuit	100	3.DEF/4.DEF	...	CO.0/CC.1/ 1.DEF/2.DEF	...
DF057	Water in diesel fuel detector circuit	2264	...	...	X	...
DF069	Impact detected signal	1620	...	...	X	...
DF070	Clutch switch circuit	830	...	...	1.DEF/2.DEF	...
DF091	Vehicle speed signal	500	...	...	1.DEF/2.DEF/ 3.DEF/4.DEF	...

GETtheMANUALS.org

Tool fault	Description	Associated DTC	LEVEL 1 FAULT WARNING LIGHT (Orange heater plugs On indicator light)	LEVEL 2 FAULT WARNING LIGHT (Red overheating warning light)	NO WARNING LIGHT ON	OBD WARNING LIGHT ON
DF097	Camshaft sensor circuit	340	...	...	1.DEF/2.DEF	...
DF098	Fuel temperature sensor circuit	180	...	...	CC.0/CO.1	...
DF114	EGR solenoid valve circuit	400	...	...	1.DEF	...
DF118	EGR solenoid valve servo-control	409	...	...	1.DEF/2.DEF	...
DF176	Low-speed fan unit circuit	480	CO/CC.0/CC.1/ 1.DEF	...	...	...
DF177	High-speed fan unit circuit	481	CO/CC.0/CC.1/ 1.DEF	...	...	...
DF195	Camshaft sensor/ engine speed consistency	16	1.DEF	...	...	...
DF209	EGR position sensor circuit	486	...	...	CC.1/CO.0	CC.1/ CO.0
DF226	Damper valve circuit	638	CO/CC.0/CC.1/CC/ 1.DEF/2.DEF/ 3.DEF/4.DEF	...	...	...
DF227	Turbulence flap (only affects Vdiag 08)	660	CC.0 / CC.1	...	...	...
DF238	Heating element no. 3 relay circuit	1643	CO/CC.0/CC.1/ 1.DEF	...	...	...
DF239	Heating element no. 2 relay circuit	1642	CO/CC.0/CC.1/ 1.DEF	...	...	...
DF240	Heating element no. 1 relay circuit	1641	CO/CC.0/CC.1/ 1.DEF	...	...	...
DF250	ESP function	C122	...	...	1.DEF/2.DEF	...
DF272	EGR control circuit	403	1.DEF/2.DEF	...	...	...
DF276	Injector code programming	611	1.DEF/2.DEF	...	...	...
DF304	EGR by-pass circuit	2169	CO/CC.0/CC.1/ 1.DEF	...	...	...

GETtheMANUALS.org

Tool fault	Description	Associated DTC	LEVEL 1 FAULT WARNING LIGHT (Orange heater plugs On indicator light)	LEVEL 2 FAULT WARNING LIGHT (Red overheating warning light)	NO WARNING LIGHT ON	OBD WARNING LIGHT ON
DF308	Clogged particle filter	1431	X	...	...	...
DF309	Particle filter downstream temp. sensor	544	CO.1/CC.0/1.DEF	...	...	...
DF310	Particle filter upstream temp. sensor	2031	CC.0/CO.1/1.DEF	...	...	...
DF311	Failed regenerations limit exceeded	1435	X	...	...	...
DF312	Speed request	1436	...	...	X	...
DF315	Particle filter differential pressure sensor	470	C0/CO.0/CC.1/ 1.DEF/2.DEF	...	...	...
DF619	EGR valve jammed open	2142	...	...	X	...
DF620	EGR valve fouled	2141	X	...	...	...
DF621	EGR valve is jammed open (OBD fault)	2413	...	...	X	X
DF717	Particle filter upstream pressure	1480	1.DEF	...	...	...
DF953	Particle filter absent	2002	...	...	1.DEF/2.DEF	...

GETtheMANUALS.org

DF001 PRESENT OR STORED	COOLANT TEMPERATURE SENSOR CIRCUIT CC.0 : short circuit to earth CO.1 : open circuit or short circuit on + 12 V

NOTES	**Conditions for applying the fault finding procedure to stored faults:** The fault is declared present: – when an attempt is made to start the engine, – the engine is running
	Special notes: If the fault is present: – the coolant temperature: **PR064 Coolant temperature** is fixed at **119°C**, – the preheating phase is greater than **10 seconds**, – the low-speed fan unit (**motor-driven fan unit 1**) is continuously supplied, – if **motor-driven fan unit 1** is faulty, then **motor-driven fan unit 2** is activated on vehicles fitted with climate control. – the **level 1** warning light is lit. Use bornier **Elé. 1681** for all operations on the computer connectors.

Check the connections of the **coolant temperature sensor 4-track connector**.
Repair if necessary.
Measure the **resistance** of the **coolant temperature sensor** between **tracks 2 and 3** of its black connector.
Replace the sensor if its resistance is not approximately:

75780 ± 7000 Ω at - 40°C
12460 ± 1128 Ω at -10°C
2252 ± 112 Ω at 25°C
811.4 ± 39 Ω at 50°C
283 ± 8 Ω at 80°C
115 ± 3 Ω at 110°C
87 ± 2 Ω at 120°C

Check the injection computer connections.
Check the **insulation, continuity and the absence of interference resistance** on the following connections:
Injection computer brown 48-track connector B, **track F2** → **Track 3** coolant temperature sensor
Injection computer brown 48-track connector B, **track H1** → **Track 2** coolant temperature sensor
Repair if necessary.

If the fault is still present, replace the coolant temperature sensor.

AFTER REPAIR	Deal with any faults. Carry out a road test followed by another check with the diagnostic tool.

GETtheMANUALS.org

DF003 PRESENT OR STORED	ATMOSPHERIC PRESSURE SENSOR CIRCUIT 1.DEF : signal outside upper limit 2.DEF : signal outside lower limit 3.DEF : inconsistent signal

NOTES	**Conditions for applying the fault finding procedure to stored faults:** The fault is declared present after **the engine is started or** following a road test.
	Special notes: The atmospheric pressure sensor is integrated into the injection computer and cannot be separated.
	If the fault is present: – there is light smoke, – the atmospheric pressure value changes to safe mode, **PR035 Atmospheric pressure = 750 mbar**. – the **level 1** warning light is lit. Use bornier **Elé. 1681** for all operations on the computer connectors.

Disconnect the injection computer and check the condition of the contacts and connector.
Repair if necessary.
Display the value of parameter **PR041 Turbocharger pressure**.
If this value is stuck at 750 mbar, refer to interpretation of fault **DF004 Turbocharging pressure sensor circuit** .
If the fault is still present, contact the Techline.

AFTER REPAIR	Deal with any faults. Carry out a road test followed by another check with the diagnostic tool.

GETtheMANUALS.org

DF004 PRESENT OR STORED	TURBOCHARGING PRESSURE SENSOR CIRCUIT CO.0 : open circuit or short circuit to earth CC.1 : short circuit to +12 V 1.DEF : inconsistent signal

NOTES	**Conditions for applying the fault finding procedure to stored faults:** The fault is declared present after starting the engine, or during a road test.
	Special notes: Use bornier **Elé. 1681** for any operations on the injection computer connectors. If the fault is present: – the EGR function is inhibited, – the turbocharging pressure sensor is in defect mode, **PR041 = 750 mbar**, If CO.0 or CC.1 is present the **level 1** warning light is lit.
	Order of priority in the event of more than one fault: Deal with fault **DF011 Sensor feed voltage no. 1** first if it is present or stored.
	IMPORTANT This fault can result in a rapid and significant fouling of the particle filter.

CO.0	***NOTES***	None.

Check the turbocharger pressure sensor connections.
Check the injection computer connections.
Repair if necessary.

Check **the continuity and insulation against earth** of the following connections:

- Injection computer brown 48-track connector B, **track K2** → **Track 3** turbocharger pressure sensor connector
- Injection computer brown 48-track connector B, **track G4** → **Track 1** turbocharger pressure sensor connector
- Injection computer brown 48-track connector B, **track D4** → **Track 2** turbocharger pressure sensor connector

Repair if necessary.

If the fault is still present, replace the turbocharging pressure sensor.

AFTER REPAIR	Deal with any faults. Carry out a road test followed by another check with the diagnostic tool.

GETtheMANUALS.org

DF004 **CONTINUED**	

CC.1	***NOTES***	None.

Check the turbocharger pressure sensor connections. Check the injection computer connections. Repair if necessary.
Check **the continuity and insulation against + 12 volts** of the following connections: Injection computer brown 48-track connector B, **track D4** ⟶ **Track 2** turbocharger pressure sensor connector Injection computer brown 48-track connector B, **track K2** ⟶ **Track 3** turbocharger pressure sensor connector Repair if necessary.
If the fault is still present, replace the turbocharging pressure sensor.

1.DEF	***NOTES***	None.

If it occurs with fault DF003, perform fault finding on parameter **PR041 Turbocharging pressure**. If the turbocharger pressure sensor is correct, contact the Techline
Check the turbocharger pressure sensor connections. Check the injection computer connections. Repair if necessary.
Check the **continuity and the absence of interference resistance** of the following connections: Injection computer brown 48-track connector B, **track G4** ⟶ **Track 1** turbocharger pressure sensor connector Injection computer brown 48-track connector B, **track D4** ⟶ **Track 2** turbocharger pressure sensor connector Injection computer brown 48-track connector B, **track K2** ⟶ **Track 3** turbocharger pressure sensor connector Repair if necessary.
If the fault is still present, contact the Techline.

AFTER REPAIR	Deal with any faults. Carry out a road test followed by another check with the diagnostic tool.

GETtheMANUALS.org

DF005 PRESENT OR STORED	ENGINE SPEED SENSOR CIRCUIT 1.DEF : no signal 2.DEF : inconsistent signal

NOTES	**Conditions for applying the fault finding procedure to a stored fault:** The fault is declared present: – when an attempt is made to start the engine, – when the engine is running.
	Special notes: Use bornier **Elé. 1681** for all operations on the computer connectors. The engine speed sensor is consistent with the camshaft sensor. If the fault is present, it is impossible to start or stop the engine and the **level 2** warning light is lit.

Check the engine speed sensor connections.
Repair if necessary.
Check that the sensor is correctly mounted and that the flywheel target is not damaged.
Check that the gap between the engine speed sensor and the engine flywheel is **0.5 to 1.8 mm**.
Measure the engine speed sensor **resistance** between **terminals 1 and 2** of the black connector.
If the **coil resistance** is not **250 ± 50** Ω at an engine temperature of **20°C**, replace the engine speed sensor.

Check the injection computer connections.
Repair if necessary.

Check for **continuity and the absence of interference resistance** of the following connections:
Injection computer brown 48-track connector B, **track B1** → **Track 1** engine speed sensor
Injection computer brown 48-track connector B, **track C1** → **Track 2** engine speed sensor
Repair if necessary.
If the fault is still present, contact the Techline.

AFTER REPAIR	Deal with any faults. Carry out a road test followed by another check with the diagnostic tool.

GETtheMANUALS.org

DF007 PRESENT OR STORED	RAIL PRESSURE SENSOR CIRCUIT CC.0 : short circuit to earth CO.1 : open circuit or short circuit on + 12 V 1.DEF : offset at minimum threshold 2.DEF : offset at maximum threshold

NOTES	**Priorities when dealing with a number of faults :** Deal with fault **DF013 Sensor supply voltage no. 3** first, if it is present or stored.
	Conditions for applying the fault finding procedure to stored faults: The fault is declared present after repeated engine starts or with the engine running.
	Special notes: Use bornier **Elé. 1681** for all operations on the computer connectors. If the fault is present, the engine stops immediately. If CO.1, 1.DEF is present the **level 2** fault warning light will be lit.

CC.0	***NOTES***	None.

Check the rail pressure sensor connectors. Check the injection computer connections. Repair if necessary.
Check the **continuity** and **insulation to earth** of the following connections: Injection computer brown 48-track connector B, **track G3** ⟶ **Track 2** rail pressure sensor Injection computer brown 48-track connector B, **track A4** ⟶ **Track 3** rail pressure sensor Repair if necessary.
If the fault is still present, replace the rail pressure sensor and tighten to **35 ± 5 Nm**. **Observe the safety advice in the Introduction.**

AFTER REPAIR	Deal with any faults. Carry out a road test followed by another check with the diagnostic tool.

GETtheMANUALS.org

DF007 **CONTINUED**	

CO.1	***NOTES***	None.

Check the rail pressure sensor connectors.
Check the injection computer connections.
Repair if necessary.

Check **for continuity** and **insulation to + 12 V** on the following connections:
Injection computer brown 48-track connector B, **track G3** ⟶ **Track 2** rail pressure sensor
Injection computer brown 48-track connector B, **track C4** ⟶ **Track 1** rail pressure sensor
Injection computer brown 48-track connector B, **track A4** ⟶ **Track 3** rail pressure sensor
Repair if necessary.

If the fault is still present, replace the rail pressure sensor and tighten to **35 ± 5 Nm**.
Observe the safety advice in the Introduction.

1.DEF ***2.DEF***	***NOTES***	None.

Check the rail pressure sensor connectors.
Check the injection computer connections.
Repair if necessary.

Check for **continuity** and absence of **interference resistance** of the following connections:
Injection computer brown 48-track connector B, **track G3** ⟶ **Track 2** rail pressure sensor
Injection computer brown 48-track connector B, **track A4** ⟶ **Track 3** rail pressure sensor
Injection computer brown 48-track connector B, **track C4** ⟶ **Track 1** rail pressure sensor
Repair if necessary.

With the ignition on and the engine stopped for over 1 minute:
Display parameter **PR038 Rail pressure** in the **Fuel circuit, Engine management function** tab.
– If the value is below **50 bar**, the sensor is in order.
In this case, contact the Techline.
– If the pressure is above **50 bar**, replace the rail pressure sensor and tighten to **35 ± 5 Nm**.
Observe the safety advice in the **Introduction**.

AFTER REPAIR	Deal with any faults. Carry out a road test followed by another check with the diagnostic tool.

GETtheMANUALS.org

DF008 PRESENT OR STORED	PEDAL POTENTIOMETER CIRCUIT GANG 1 CO.0 : Open circuit or short circuit to earth CC.1 : Short circuit to + 12 volts 1.DEF : Inconsistent signal 2.DEF : Accelerator pedal sensor locked

NOTES	**Conditions for applying the fault finding procedure to stored faults:** The fault is declared present after a series of full load / no load actions on the accelerator pedal.
	Special notes: Turbocharging, heating element actuation and cruise control/speed limiter not authorised. If CO.0, CC.1, 1.DEF are present, the **level 1** warning light is lit. The engine speed is set at **1,400 rpm** if there is a fault on gang 1 and 2 of the pedal potentiometer and the engine torque is limited. Use bornier **Elé. 1681 or Elé. 1590** for any work on the computer connectors. If 2.DEF is present: the brake pedal has been depressed while the accelerator is depressed and jammed.
	Priorities when dealing with a number of faults : Deal with fault **DF011 Sensor supply voltage no. 1** first if it is present or stored.

WARNING
This fault may appear if the wiring harness has been damaged.
Follow the procedure described in the Wiring Check in the Introduction.
This check enables the condition and the conformity of the engine wiring harness to be checked.

AFTER REPAIR	Deal with any faults. Carry out a road test followed by another check with the diagnostic tool.

GETtheMANUALS.org

DF008 **CONTINUED 1**	

CO.0	***NOTES***	**Priorities when dealing with a number of faults :** If fault **DF009 Pedal potentiometer circuit gang 2** is present at the same time, check that the pedal sensor connector is connected correctly.

Check the pedal potentiometer connections.
Check the injection computer connections.
Repair if necessary.

Check the **continuity** and **insulation to earth** of the following connections:

Injection computer black 32-track connector A, **track H2** ⟶ **Track 3** pedal potentiometer connector

Injection computer black 32-track connector A, **track G2** ⟶ **Track 4** pedal potentiometer connector

Injection computer black 32-track connector A, **track H3** ⟶ **Track 2** pedal potentiometer connector

Repair if necessary.

Measure the **resistance** of the pedal potentiometer on **gang 1** between **tracks 4** and **2**.
Replace the pedal potentiometer if the resistance is not approximately **1.2 ± 0.1 kΩ**.

CC.1	***NOTES***	None.

Check the pedal potentiometer connections.
Check the injection computer connections.
Repair if necessary.

Check **for continuity** and **insulation to + 12 V** on the following connections:

Injection computer black 32-track connector A, **track H2** ⟶ **Track 3** pedal potentiometer connector

Injection computer black 32-track connector A, **track G2** ⟶ **Track 4** pedal potentiometer connector

Injection computer black 32-track connector A, **track H3** ⟶ **Track 2** pedal potentiometer connector

Repair if necessary.

Measure the **resistance** of the pedal potentiometer on **gang 1** between **tracks 4** and **2**.
Replace the pedal potentiometer if its resistance is not approximately: **1.2 ± 0.1 kΩ**.

AFTER REPAIR	Deal with any faults. Carry out a road test followed by another check with the diagnostic tool.

GETtheMANUALS.org

DF008 **CONTINUED 2**	

1.DEF	***NOTES***	None.

Check the pedal potentiometer connections.
Check the injection computer connections.
Repair if necessary.

Check for **continuity** and absence of **interference resistance** of the following connections:

- Injection computer black 32-track connector A, **track H2** → **Track 3** pedal potentiometer sensor
- Injection computer black 32-track connector A, **track G2** → **Track 4** pedal potentiometer sensor
- Injection computer black 32-track connector A, **track H3** → **Track 2** pedal potentiometer sensor
- Injection computer black 32-track connector A, **track F3** → **Track 6** pedal potentiometer sensor
- Injection computer black 32-track connector A, **track F2** → **Track 5** pedal potentiometer sensor
- Injection computer black 32-track connector A, **track F4** → **Track 1** pedal potentiometer sensor

If the fault is still present, replace the pedal potentiometer.

AFTER REPAIR	Deal with any faults. Carry out a road test followed by another check with the diagnostic tool.

GETtheMANUALS.org

DF008 **CONTINUED 3**	

2.DEF	***NOTES***	None.

This is a test procedure designed to detect an accelerator pedal that is jammed in the depressed position.
It monitors the accelerator pedal in relation to the brake pedal.
If the test procedure detects depression of the brake pedal over 600 ms, it registers a fault which is stored in the computer. While this fault is present (both pedals depressed simultaneously) the engine switches to safe mode and the engine speed is set at 1,400 rpm.
Once the fault is no longer present (e.g.. brake and accelerator pedals released) safe mode is deactivated and the engine immediately regains its ability to respond to speed/torque requests.
This fault may occur even if the accelerator pedal is not jammed, if there is driver error during use:
– “Heel-and-toe” type driving.
– Vehicle with driving school option.
The procedure in this case should be to clear the fault and take another reading.

Check the mechanical condition of the accelerator pedal:
– locked in full load position,
– with the pedal blocked by an external component.

Repair if necessary.

Vary the position of the pedal and refer to the conformity check in order to check the operating values of the accelerator pedal potentiometer.

If the values displayed are inconsistent, replace the accelerator pedal potentiometer.

AFTER REPAIR	Deal with any faults. Carry out a road test followed by another check with the diagnostic tool.

GETtheMANUALS.org

DF009 PRESENT OR STORED	PEDAL POTENTIOMETER CIRCUIT GANG 2 CO.0 : open circuit or short circuit to earth CC.1: short circuit to + 12 V 1.DEF : inconsistent signal

NOTES	**Priorities when dealing with a number of faults :** Deal with fault **DF012 Sensor feed no. 2 voltage** first, if it is present or stored.
	Conditions for applying the fault finding procedure to stored faults: The fault is declared present after a series of full-load/no-load actions on the accelerator pedal.
	Special notes: Turbocharging, heating element actuation and cruise control are not authorised. The **level 1** warning light is lit. The engine speed is fixed at **1400 rpm** if there is a fault on gangs 1 and 2 of the pedal potentiometer and the engine torque is limited. Use bornier **Elé. 1681** for all operations on the computer connectors.

WARNING
This fault may appear if the wiring harness has been damaged.
Follow the procedure described in the Wiring Check in the Introduction.
This check enables the condition and the conformity of the engine wiring harness to be checked.

AFTER REPAIR	Deal with any faults. Carry out a road test followed by another check with the diagnostic tool.

GETtheMANUALS.org

DF009 **CONTINUED 1**	

CO.0	***NOTES***	**Priorities when dealing with a number of faults :** If fault **DF008 Pedal potentiometer circuit track 1** is present at the same time, check that the sensor is connected correctly.

Check the pedal potentiometer connections.
Check the injection computer connections.
Repair if necessary.

Check the **continuity** and **insulation to earth** of the following connections:
Injection computer black 32-track connector A, **track F3** → **Track 6** pedal potentiometer connector
Injection computer black 32-track connector A, **track F2** → **Track 5** pedal potentiometer connector
Injection computer black 32-track connector A, **track F4** → **Track 1** pedal potentiometer connector
Repair if necessary.

Measure the **resistance** on the pedal potentiometer on **track 2** between **tracks 1** and **5**.
Replace the pedal potentiometer if the resistance is not approximately **1.7 ± 0.9 kΩ**.

CC.1	***NOTES***	**Priorities when dealing with a number of faults :** If fault **DF012 Sensor feed voltage no. 2** is present at the same time, if it is present or stored.

Check the pedal potentiometer connections.
Check the injection computer connections.
Repair if necessary.

Check **for continuity** and **insulation to + 12 V** on the following connections:
Injection computer brown 48-track connector B, **track F3** → **Track 6** pedal potentiometer connector
Injection computer brown 48-track connector B, **track F4** → **Track 1** pedal potentiometer connector
Repair if necessary.

Measure the **resistance** on the pedal potentiometer on **track 2** between **tracks 1** and **5**.
Replace the pedal potentiometer if the resistance is not approximately **1.7 ± 0.9 kΩ**.

AFTER REPAIR	Deal with any faults. Carry out a road test followed by another check with the diagnostic tool.

GETtheMANUALS.org

DF009 **CONTINUED 2**	

1.DEF	***NOTES***	None.

Check the rail pressure sensor connectors.
Check the injection computer connections.
Repair if necessary.

Check for **continuity** and absence of **interference resistance** of the following connections:

- Injection computer black 32-track connector A, **track F3** → **Track 6** pedal potentiometer sensor
- Injection computer black 32-track connector A, **track F2** → **Track 5** pedal potentiometer sensor
- Injection computer black 32-track connector A, **track F4** → **Track 1** pedal potentiometer sensor
- Injection computer black 32-track connector A, **track H2** → **Track 3** pedal potentiometer sensor
- Injection computer black 32-track connector A, **track G2** → **Track 4** pedal potentiometer sensor
- Injection computer black 32-track connector A, **track H3** → **Track 2** pedal potentiometer sensor

Repair if necessary.
If the fault is still present, replace the pedal potentiometer.

AFTER REPAIR	Deal with any faults. Carry out a road test followed by another check with the diagnostic tool.

GETtheMANUALS.org

DF011 PRESENT OR STORED	SENSOR SUPPLY VOLTAGE NO. 1 1.DEF : Signal outside lower limit 2.DEF : Signal outside upper limit

NOTES	**Conditions for applying the fault finding procedure to stored faults:** The fault is declared present following a road test or after attempting to start the engine several times.
	Special notes: If the fault is present: – the cruise control and heating elements are deactivated, – turbocharging is inhibited, – the engine speed is limited, – the **level 1** warning light is lit. Use bornier **Elé. 1681** for any operations on the injection computer connectors.

WARNING
This fault may appear if the wiring harness has been damaged.
Follow the procedure described in Wiring check in the Introduction.
This check enables the condition and the conformity of the engine wiring harness to be checked.

1.DEF ***2.DEF***	***NOTES***	**Priorities when dealing with a number of faults :** If fault **DF008 Pedal potentiometer circuit track 1** is present at the same time, check that the sensor is connected correctly.

The sensors connected to **supply no. 1** are:
– **turbocharger pressure sensor,**
– **accelerator pedal potentiometer sensor, gang 1,**
– **particle filter differential pressure sensor.**
To locate a faulty sensor and/or connection, disconnect one of these sensors then check whether the fault becomes stored.
If the fault remains present, repeat the operation with the other sensor (wait for a few seconds between disconnecting so that the computer can take its measurement).
If the fault is stored after a disconnection, replace the faulty sensor or repair its connection.
Clear the faults created by the multiple disconnections.

AFTER REPAIR	Deal with any faults. Carry out a road test followed by another check with the diagnostic tool.

GETtheMANUALS.org

DF011 **CONTINUED**	

If the fault is still present when both these sensors have been disconnected:
1. Check the **earth insulation** of the following connections:
Injection computer brown 48-track connector B,
track G4 ⟶ **Track 1** of the turbocharger pressure sensor
Injection computer brown 48-track connector B,
track K2 ⟶ **Track 3** of the turbocharger pressure sensor
Injection computer black 32-track connector A,
track H2 ⟶ **Track 3** of the accelerator pedal potentiometer gang 1
Injection computer black 32-track connector A,
track G2 ⟶ **Track** 4 of the accelerator pedal potentiometer gang 1
Injection computer brown 48-track connector B,
track G4 ⟶ **Track 1 of the particle filter differential pressure sensor**
Injection computer grey 32-track connector C,
track B2 ⟶ **Track 3 of the particle filter differential pressure sensor**

2. Check **the insulation from + 12 V** of the following connections:
Injection computer brown 48-track connector B,
track K2 ⟶ **Track 3** of the turbocharger pressure sensor
Injection computer brown 48-track connector B,
track D4 ⟶ **Track 2** of the turbocharger pressure sensor
Injection computer black 32-track connector A,
track H3 ⟶ **Track 2** of the accelerator pedal potentiometer gang 1
Injection computer black 32-track connector A,
track H2 ⟶ **Track 3** of the accelerator pedal potentiometer gang 1
Injection computer grey 32-track connector C,
track B2 ⟶ **Track 3 of the particle filter differential pressure sensor**
Injection computer grey 32-track connector C,
track F3 ⟶ **Track 2 of the particle filter differential pressure sensor**
Repair if necessary.

3. Check the **insulation** between the following connections **after disconnecting the sensors** and the injection computer:
– tracks **2** and 4 of the **pedal sensor gang 1** connector.
– tracks **1** and 2 of the **turbocharger pressure sensor** connector.
If these checks do not produce the correct results, replace the faulty sensor(s).
If the fault is still present, contact the Techline.

AFTER REPAIR	Deal with any faults. Carry out a road test followed by another check with the diagnostic tool.

GETtheMANUALS.org

DF012 PRESENT OR STORED	SENSOR SUPPLY VOLTAGE No. 2 1.DEF : Signal outside lower limit 2.DEF : Signal outside upper limit

NOTES	**Conditions for applying the fault finding procedure to stored faults:** The fault is declared present following a road test or after attempting to start the engine several times.
	Special notes: If the fault is present: – the EGR offset programming and heating element management functions are disabled, – cruise control is deactivated, – the engine speed is limited, – the **level 1** warning light is lit, – the OBD indicator light will come on after three consecutive cycles (starting + 5 seconds + switch off the ignition and wait for the following message to appear on the **diagnostic tool: "Loss of dialogue with the computer: EDC16 C3, check the tool connection and the computer supply"**). Use bornier **Elé. 1681** for any operations on the injection computer connectors.

WARNING
This fault may appear if the wiring harness has been damaged.
Follow the procedure described in Check wiring in the Introduction.
This check enables the condition and the conformity of the engine wiring harness to be checked.

The sensors connected to **feed no. 2** are:
– **EGR valve position sensor.**
– **Accelerator pedal potentiometer sensor gang 2.**
To locate a faulty sensor and/or connection, disconnect one of these sensors then check whether the fault becomes stored.
If the fault remains present, repeat the operation with the other sensors (wait for a few seconds between disconnecting so that the computer can take its measurement).
If the fault is stored after a disconnection, replace the faulty sensor or repair its connection.
Clear the faults created by the multiple disconnections.

AFTER REPAIR	Deal with any faults. Carry out a road test followed by another check with the diagnostic tool.

GETtheMANUALS.org

DF012 **CONTINUED**	

If the fault is still present when both these sensors have been disconnected:
1. Check the **earth insulation** of the following connections:
Injection computer brown 48-track connector B,
track F4 ⟶ **Track 2** of the EGR valve connector
Injection computer brown 48-track connector B,
track J2 ⟶ **Track 6** of the EGR valve connector
Injection computer black 32-track connector A,
track F2 ⟶ **Track 5** of the accelerator pedal potentiometer gang 2
Injection computer black 32-track connector A,
track F3 ⟶ **Track** 6 of the accelerator pedal potentiometer gang 2
Repair if necessary.

2. Check **the insulation from + 12 V** of the following connections:
Injection computer brown 48-track connector B,
track J2 ⟶ **Track 6** of the EGR valve connector
Injection computer grey 32-track connector C,
track C2 ⟶ **Track 4** of the EGR valve connector
Injection computer black connector A,
track F3 ⟶ **Track 6** of the accelerator pedal potentiometer gang 2
Injection computer black connector A,
track F4 ⟶ **Track 1** of the accelerator pedal potentiometer gang 2
Repair if necessary.

3. Check the **insulation** between the following connections **after disconnecting the sensors and the injection computer**:
– tracks **1** and **5** of the **pedal sensor gang 2** connector.
– tracks **2** and **4** of the **EGR valve position sensor connector**.
If these checks do not produce the correct results, replace the faulty sensor(s). If the fault is still present, contact the Techline.

AFTER REPAIR	Deal with any faults. Carry out a road test followed by another check with the diagnostic tool.

GETtheMANUALS.org

DF013 PRESENT OR STORED	SENSOR SUPPLY VOLTAGE No. 3 1.DEF : Signal outside lower limit 2.DEF : Signal outside upper limit

NOTES	**Conditions for applying the fault finding procedure to stored faults:** The fault is declared present following a road test or after attempting to start the engine several times.
	Special notes: If the fault is present: – the EGR functions are disabled, – the engine speed is limited, – the engine stops. – the **level 2** warning light is lit. Use bornier **Elé. 1681** for any operations on the injection computer connectors.

WARNING
This fault may appear if the wiring harness has been damaged.
Follow the procedure described in Check wiring in the Introduction.
This check enables the condition and the conformity of the engine wiring harness to be checked.

The sensors connected to **supply no. 3** are:
– **rail pressure sensor,**
– **air flowmeter.**
To locate a faulty sensor and/or connection, disconnect one of these sensors then check whether the fault becomes stored.
If the fault remains present, repeat the operation with the other sensors (wait for a few seconds between disconnecting so that the computer can take its measurement).
If the fault is stored after a disconnection, replace the faulty sensor or repair its connection.
Clear the faults created by the multiple disconnections.

AFTER REPAIR	Deal with any faults. Carry out a road test followed by another check with the diagnostic tool.

GETtheMANUALS.org

DF013 **CONTINUED**	

If the fault is still present when both these sensors have been disconnected:
1. Check the **earth insulation** of the following connections:
- Injection computer brown 48-track connector B, **track G3** → **Track 2** of the rail pressure sensor
- Injection computer brown 48-track connector B, **track A4** → **Track 3** of the rail pressure sensor
- Injection computer brown 48-track connector B, **track G1** → **Track 5** of the air flowmeter
- Injection computer brown 48-track connector B, **track B4** → **Track 3** of the air flowmeter

Repair if necessary.

2. Check **the insulation from + 12 V** of the following connections:
- Injection computer brown connector B, **track G3** → **Track 2** of the rail pressure sensor
- Injection computer brown connector B, **track C4** → **Track 1** of the rail pressure sensor
- Injection computer brown connector B, **track G1** → **Track 5** of the air flowmeter
- Injection computer brown connector B, **track E2** → **Track 2** of the air flowmeter

Repair if necessary.

3. Check the **insulation** between the following connections **after disconnecting the sensors and the injection computer**:
– tracks **1** and **3** of the **rail pressure sensor**,
– tracks **2** and **3** of the **air flow sensor connector.**

If these checks do not produce the correct results, replace the faulty sensor(s).
If the fault is still present, contact the Techline.

AFTER REPAIR	Deal with any faults. Carry out a road test followed by another check with the diagnostic tool.

GETtheMANUALS.org

DF015 PRESENT OR STORED	MAIN RELAY control CIRCUIT 1.DEF : relay cut out too soon 2.DEF : relay cut out too late

NOTES	**Conditions for applying the fault finding procedure to stored faults:** Only deal with this fault if it is stored.
	Special notes: Use bornier **Elé. 1681** for any operations on the injection computer connectors. If the fault is present, the level 1 warning light will be lit.

Check the condition of the main relay supply fuse **FM3 30A**.
Replace the fuse if necessary.
Check the injection computer connections, and the injection computer supply relay **R8**.
Repair if necessary.
Remove the **R8** relay and check it is working correctly.
If this relay is defective, replace it and clear the faults.
Check the condition and tightness of the battery terminals and its engine earth connection.
Check the **continuity** and **make sure there is no interference resistance** on the following connection:
Injection computer brown **48-track connector B, track E1** ⟶ **Relay mounting R8 track 15**
Repair if necessary.

AFTER REPAIR	Deal with any faults. Carry out a road test followed by another check with the diagnostic tool.

GETtheMANUALS.org

DF017 PRESENT OR STORED	PRE-POSTHEATING UNIT CONTROL CIRCUIT CC.1 : short circuit to +12 V CC.0 : open circuit or short circuit to earth CO : open circuit 1.DEF : Internal electronic fault

NOTES	**Conditions for applying the fault finding procedure to stored faults:** The fault is declared present after attempts have been made to start the engine.
	Special notes: If the fault is present, it is difficult or even impossible to start the vehicle when cold. Use bornier **Elé. 1681** for any operations on the injection computer connectors.

CC.1	***NOTES***	None.

Check the pre-postheating unit connections and the heating plug supply cables.
Check the injection computer connections.
Repair if necessary.

Check the condition of the **F2 (70A)** supply fuse on the power supply fuse board.
Check **the continuity and insulation against + 12 V** of the following connections:
Injection computer grey 32-track connector C, **track E2** ⟶ **Track 8** preheating unit
Injection computer grey 32-track connector C, **track A4** ⟶ **Track 9** preheating unit
Repair if necessary.
If the fault is still present, replace the pre-postheating unit.

AFTER REPAIR	Deal with any faults. Carry out a road test followed by another check with the diagnostic tool.

GETtheMANUALS.org

DF017 **CONTINUED**	

CC.0 ***CO***	***NOTES***	**Special notes:** If the pre-postheating unit has a short circuit to earth there is a risk that the heater plugs will be operated continuously. The heater plugs and the engine may be damaged.

Check the pre-postheating unit connections and the heating plug supply cables. Check the injection computer connections. Repair if necessary.
Check the condition of the **F2 (70A)** supply fuse on the power supply fuse board. Check **the continuity and insulation** from earth of the following connections: Injection computer grey 32-track connector C, **track A4** ⟶ **Track 9** preheating unit Injection computer grey 32-track connector C, **track E2** ⟶ **Track 8** preheating unit Repair if necessary.
If the fault is still present, replace the pre-postheating unit.

1.DEF	***NOTES***	None.

Check the pre-postheating unit connections and the heating plug supply cables. Check the injection computer connections. Repair if necessary.
Check the condition of the **F2 (70A)** supply fuse on the power supply fuse board. Check **the continuity and insulation** from earth of the following connections: Injection computer grey 32-track connector C, **track A4** ⟶ **Track 9** preheating unit Injection computer grey 32-track connector C, **track E2** ⟶ **Track 8** preheating unit Repair if necessary.
If the fault is still present, replace the pre-postheating unit.

AFTER REPAIR	Deal with any faults. Carry out a road test followed by another check with the diagnostic tool.

GETtheMANUALS.org

DF025 PRESENT OR STORED	PRE-POSTHEATING UNIT DIAGNOSTIC LINE

NOTES	**Conditions for applying the fault finding procedure to a stored fault:** The fault is declared present after several attempts have been made to start the engine.
	Special notes: It is difficult or even impossible to start the engine when cold. Use bornier **Elé. 1681** for any operations on the injection computer connectors.

Check the pre-postheating unit connections.
Check the connections on **all the heater plugs**.
Repair if necessary.

Check **the resistance** of the heater plugs:
Replace any plug with a resistance greater than **2 Ω at +20°C**.
Check the **continuity and absence of interference resistance** of the following connections:

preheating unit **track 1** → heater plug of **cylinder 3**
preheating unit **track 2** → heater plug of cylinder **1**
preheating unit **track 6** → heater plug of cylinder **4**
preheating unit **track 7** → heater plug of **cylinder 2**

Check for + 12 V on **track 3** of the preheating unit (by fuse F2, 70A).

If the fault is still present.
Check the injection computer connections.
Check the following connections for **continuity and make sure there is no extraneous resistance**:

Injection computer grey 32-track connector C, **track A4** → **Track 9** preheating unit connector
Injection computer grey 32-track connector C, **track E2** → **Track 8** preheating unit connector

If the fault is still present, replace the pre-postheating unit.

AFTER REPAIR	Deal with any faults. Carry out a road test followed by another check with the diagnostic tool.

GETtheMANUALS.org

DF037 PRESENT OR STORED	ENGINE IMMOBILISER

NOTES	**Conditions for applying the fault finding procedure to stored faults:** The fault is declared present after an attempt to start engine.
	Special notes: It is impossible to start the vehicle. Use bornier **Elé. 1681** for any operations on the injection computer connectors.

Check the UCH connections. Check the injection computer connections. Repair if necessary.
Carry out a multiplex network test and a complete fault finding procedure on the UCH. Refer to the UCH Technical Note if a fault is declared present. If the fault is still present, contact the Techline.

AFTER REPAIR	Deal with any faults. Carry out a road test followed by another check with the diagnostic tool.

GETtheMANUALS.org

DF038 PRESENT OR STORED	COMPUTER 1.DEF : permanent high signal 2.DEF : permanent low signal 3.DEF : configuration absent or incorrect 4.DEF : analogue/digital converter fault 5.DEF : disrupted communication 6.DEF : EEPROM fault 7.DEF : activation in Watchdog 8.DEF : signal outside upper limit 9.DEF : signal outside lower limit 10.DEF : injector control 11.DEF : injector control capacitor fault 12.DEF : injection fault when decelerating 13.DEF : initialisation fault 14.DEF : open circuit or internal electronic fault

NOTES	**Conditions for applying the fault finding procedure to a stored fault:** The fault is declared present after one attempt to start the engine, or with the engine running.
	Special notes: If 6.DEF, 8.DEF, 12.DEF is present, the **level 1** warning light is on. If one of the other faults is present, the **level 2** warning light comes on. If 6.DEF is still present, the **OBD** warning light will illuminate after three consecutive driving cycles (starting + 5 seconds + switch off the ignition and wait for the message to appear on the **diagnostic tool: "Loss of dialogue with the computer: EDC16 C3, check the tool connection and the computer supply"**). Use bornier **Elé. 1681 or Elé. 1590** for all operations on the injection computer connectors.
	Priority when dealing with a number of faults: Deal with fault **DF046 Battery voltage** first if it is present or stored.

1.DEFto 10.DEF 12.DEF 13.DEF	***NOTES***	Check the injection computer connections and the **continuity** of all the supplies. Repair if necessary. Clear the faults. Switch off the ignition, and **wait** for the following message to appear on the **diagnostic tool: "Loss of dialogue with the computer: EDC16 C3, check the tool connection and the computer supply"** before switching the ignition back on. If the fault is still present, contact the Techline.

AFTER REPAIR	Deal with any faults. Carry out a road test followed by another check with the diagnostic tool.

GETtheMANUALS.org

DF038 **CONTINUED**	

11.DEF	***NOTES***	**IMPORTANT** **Only applies to LAGUNA II ph1 and VELSATIS ph1 and ph2.** If there are a number of faults, deal with the other system faults first.

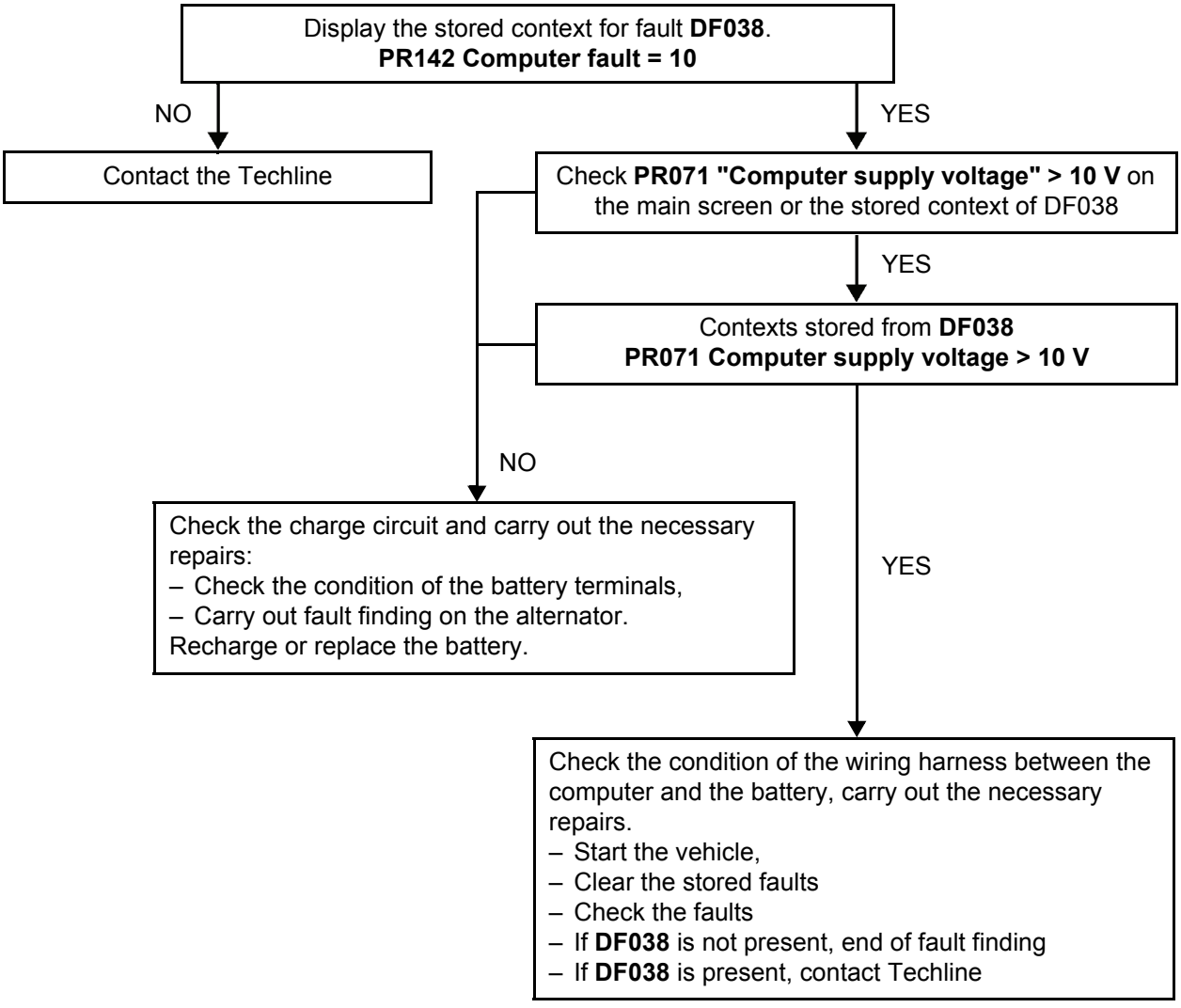

AFTER REPAIR	Deal with any faults. Carry out a road test followed by another check with the diagnostic tool.

GETtheMANUALS.org

DF039 PRESENT OR STORED	INLET AIR TEMPERATURE SENSOR CIRCUIT CO.1 : open circuit or short circuit on + 12 V CC.0 : short circuit to earth

NOTES	**Conditions for applying the fault finding procedure to a stored fault:** The fault is declared present after one attempt to start the engine, or with the engine running.
	Special notes: If the fault is present: – the air temperature value enters defect mode, i.e. **PR058 Air temperature = 20°C**. – the EGR function is inhibited. Use bornier **Elé. 1681** for any operations on the injection computer connectors.

CO.1	***NOTES***	None.

Check the air flowmeter connections.
Check the injection computer connections.
Repair if necessary.
Check **the continuity** of the following connection:

Flowmeter **track 4** ⟶ **Track 5 injection relay mounting (Engine connection unit)**

Repair if necessary.
Check **the continuity and insulation against + 12 V** of the following connections:

Injection computer brown 48-track connector B, **track G2** ⟶ **Track 1** air flowmeter connector
Injection computer brown 48-track connector B, **track E2** ⟶ **Track 2** air flowmeter connector

Repair if necessary.

Measure the air temperature sensor resistance between **tracks 1** and **2** of the air flow sensor.
Replace the air flowmeter if the resistance displayed is not:

3714 Ω ± 161 at 10°C
2488 Ω ± 90 at 20°C
1671 Ω ± 59 at 30°C

AFTER REPAIR	Deal with any faults. Carry out a road test followed by another check with the diagnostic tool.

GETtheMANUALS.org

DF039 **CONTINUED**	

CC.0	***NOTES***	None.

Check the air flowmeter connections.
Check the injection computer connections.
Repair if necessary.
Check the **continuity** and **insulation from earth** of the connections between:

Injection computer connector B,
brown 48-track, **track G2** → **Track 1** air flowmeter
Air flowmeter **track 4** → **Track 5 injection relay base (Engine connection unit)**

Injection computer connector B,
brown 48-track, **track B4** → **Track 3** air flowmeter

Repair if necessary.

Measure the resistance of the air temperature sensor integrated into the flow sensor between **tracks 1** and **2**.
Replace the air flowmeter if the resistance is not approximately:

3714 Ω ± 161 at 10°C
2488 Ω ± 90 at 20°C
1671 Ω ± 59 at 30°C

AFTER REPAIR	Deal with any faults. Carry out a road test followed by another check with the diagnostic tool.

GETtheMANUALS.org

DF040 PRESENT OR STORED	CYLINDER 1 INJECTOR CIRCUIT CC.1 : short circuit to +12 V CO : open circuit CC : short circuit 1.DEF : injector control

NOTES	**Conditions for applying the fault finding procedure to a stored fault:** The fault is declared present after the engine has been started.
	Special notes: If CC.1, CC, or 1.DEF is present, the **level 2** warning light is lit. If CO is present the **level 1** warning light is lit. If CO is still present, the **OBD** warning light will illuminate after three consecutive driving cycles (starting + 5 seconds + switch off the ignition and wait for the message to appear on the **diagnostic tool: "Loss of dialogue with the computer: EDC16 C3, check the tool connection and the computer supply"**). If the fault is present, the injection on cylinder 1 is disabled. Use bornier **Elé. 1681 or Elé. 1590** for all operations on the injection computer connectors.
	IMPORTANT This fault can result in a rapid and significant fouling of the particle filter.

WARNING
This fault may appear if the wiring harness has been damaged.
Follow the procedure described in the Wiring Check in the Introduction.
This test enables the condition and the conformity of the engine wiring harness to be checked.

CC.1 ***CO*** ***CC*** ***1.DEF***	***NOTES***	None.

Check the connections on injector no 1. Check the injection computer connections.
Repair if necessary.

Disconnect injector No. 1.
Measure the **resistance** of injector no. 1 between **tracks 1** and **2**.
Replace the injector if there is a short **circuit (R = 0 Ω)** or an **open circuit (resistance = infinity)**. Otherwise **reconnect injector No. 1**.
Check the **continuity and absence of interference resistance** of the following connections:
Injection computer grey 32-track connector C, **track G3** ⟶ **Track 2** injector no. 1
Injection computer grey 32-track connector C, **track H1** ⟶ **Track 1** injector no. 1
If the fault is still present, carry out **test 10 INCORRECT INJECTOR OPERATION**.
If the fault is still present, contact the Techline.

AFTER REPAIR	Deal with any faults. Carry out a road test followed by another check with the diagnostic tool.

GETtheMANUALS.org

DF041 PRESENT OR STORED	CYLINDER 2 INJECTOR CIRCUIT CC.1 : short circuit to +12 V CO : open circuit CC : short circuit 1.DEF : injector control

NOTES	**Conditions for applying the fault finding procedure to a stored fault:** The fault is declared present after the engine has been started.
	Special notes: If CC.1, CC, or 1.DEF is present, the **level 2** warning light is lit. If CO is present the **level 1** warning light is lit. If CO is still present, the **OBD** warning light will illuminate after three consecutive driving cycles (starting + 5 seconds + switch off the ignition and wait for the message to appear on the **diagnostic tool: "Loss of dialogue with the computer: EDC16 C3, check the tool connection and the computer supply"**). If the fault is present, the injection on cylinder 2 is disabled. Use bornier **Elé. 1681 or Elé. 1590** for all operations on the injection computer connectors.
	IMPORTANT This fault can result in a rapid and significant fouling of the particle filter.

WARNING
This fault may appear if the wiring harness has been damaged.
Follow the procedure described in the Wiring Check in the Introduction.
This test enables the condition and the conformity of the engine wiring harness to be checked.

CC.1 ***CO*** ***CC*** ***1.DEF***	***NOTES***	None.

Check the connections on injector no. 2. Check the injection computer connections.
Repair if necessary.

Disconnect injector no. 2.
Measure the **resistance** of injector no. 2 between **tracks 1** and **2**.
Replace the injector if there is a **short circuit (R = 0 Ω)** or an **open circuit (resistance = infinity)**. Otherwise **reconnect injector no. 2**.
Check the **continuity and absence of interference resistance** on the following connections:
Injection computer grey 32-track connector C, **track G4** ⟶ **Track 2** injector no. 2
Injection computer grey 32-track connector C, **track G2** ⟶ **Track 1** injector no. 2
If the fault is still present, carry out **test 10 INCORRECT INJECTOR OPERATION**.
If the fault is still present, contact the Techline.

AFTER REPAIR	Deal with any faults. Carry out a road test followed by another check with the **diagnostic tool**.

GETtheMANUALS.org

DF042 PRESENT OR STORED	CYLINDER 3 INJECTOR CIRCUIT CC.1 : short circuit to +12 V CO : open circuit CC : short circuit 1.DEF : injector control

NOTES	**Conditions for applying the fault finding procedure to a stored fault:** The fault is declared present after the engine has been started.
	Special notes: If CC.1, CC, or 1.DEF is present, the **level 2** warning light is lit. If CO is present the **level 1** warning light is lit. If CO is still present, the **OBD** warning light will illuminate after three consecutive driving cycles (starting + 5 seconds + switch off the ignition and wait for the message to appear on the **diagnostic tool: "Loss of dialogue with the computer: EDC16 C3, check the tool connection and the computer supply"**). If the fault is present, the injection on cylinder 3 is disabled. Use bornier **Elé. 1681 or Elé. 1590** for all operations on the injection computer connectors.
	IMPORTANT This fault can result in a rapid and significant fouling of the particle filter.

WARNING
This fault may appear if the wiring harness has been damaged.
Follow the procedure described in the Wiring Check in the Introduction.
This test enables the condition and the conformity of the engine wiring harness to be checked.

CC.1 ***CO*** ***CC*** ***1.DEF***	***NOTES***	None.

Check the connections on injector no. 3. Check the injection computer connections.
Repair if necessary.

Disconnect injector no.3.
Measure the **resistance** of injector no. 3 between **tracks 1** and **2**.
Replace the injector if there is a **short circuit (R = 0 Ω)** or an **open circuit (resistance = infinity)**. Otherwise **reconnect injector no. 3**.
Check **the continuity and absence of interference resistance** of the following connections:
Injection computer grey 32-track connector C, **track H4** ⟶ **Track 2** injector no. 3
Injection computer grey 32-track connector C, **track H2** ⟶ **Track 1** injector no. 3
If the fault is still present, carry out **test 10 INCORRECT INJECTOR OPERATION**.
If the fault is still present, contact the Techline.

AFTER REPAIR	Deal with any faults. Carry out a road test followed by another check with the **diagnostic tool**.

GETtheMANUALS.org

DF043 PRESENT OR STORED	CYLINDER 4 INJECTOR CIRCUIT CC.1 : short circuit to +12 V CO : open circuit CC : short circuit 1.DEF : injector control

NOTES	**Conditions for applying the fault finding procedure to a stored fault:** The fault is declared present after the engine has been started.
	Special notes: If CC.1, CC, or 1.DEF is present, the **level 2** warning light is lit. If CO is present the **level 1** warning light is lit. If CO is still present, the **OBD** warning light will illuminate after three consecutive driving cycles (starting + 5 seconds + switch off the ignition and wait for the message to appear on the **diagnostic tool: "Loss of dialogue with the computer: EDC16 C3, check the tool connection and the computer supply"**). If the fault is present, the injection on cylinder 4 is disabled. Use bornier **Elé. 1681 or Elé. 1590** for all operations on the injection computer connectors.
	IMPORTANT This fault can result in a rapid and significant fouling of the particle filter.

WARNING
This fault may appear if the wiring harness has been damaged.
Follow the procedure described in the Wiring Check in the Introduction.
This test enables the condition and the conformity of the engine wiring harness to be checked.

CC.1 ***CO*** ***CC*** ***1.DEF***	***NOTES***	None.

Check the connections to injector no. 4. Check the injection computer connections.
Repair if necessary.

Disconnect injector no. 4.
Measure the **resistance** of injector no. 4 between **tracks 1** and **2**.
Replace the injector if there is a short **circuit (R = 0 Ω)** or an **open circuit (resistance = infinity)**. Otherwise **reconnect injector no. 4**.
Check the **continuity and absence of interference resistance** on the following connections:
Injection computer grey 32-track connector C, **track H3** ⟶ **Track 2** injector no. 4
Injection computer grey 32-track connector C, **track G1** ⟶ **Track 1** injector no. 4
If the fault is still present, carry out **test 10 INCORRECT INJECTOR OPERATION**.
If the fault is still present, contact the Techline.

AFTER REPAIR	Deal with any faults. Carry out a road test followed by another check with the **diagnostic tool**.

GETtheMANUALS.org

DF046 PRESENT OR STORED	BATTERY VOLTAGE 1.DEF : excess voltage 2.DEF : undervoltage 3.DEF : voltage outside tolerance range

NOTES	**Conditions for applying the fault finding procedure to a stored fault:** The fault is declared present following a road test or after attempting to start the engine.
	Special notes: Computer operating voltage: **9 V < operating voltage < 16 V**. If the battery voltage is too low this may cause the **level 1** fault warning light to come on. It is then not possible to start the engine. Use bornier **Elé. 1681** for any operations on the injection computer connectors.

1.DEF	***NOTES***	None.

Check the charge circuits:
– Battery condition
– Alternator condition (complete fault finding procedure)
Carry out the necessary repairs.

AFTER REPAIR	Deal with any faults. Carry out a road test followed by another check with the diagnostic tool.

GETtheMANUALS.org

DF046 **CONTINUED**	

2.DEF	***NOTES***	Use the Wiring diagrams Technical Note.
3.DEF		Use the Wiring diagrams Technical Note. Only VEL SATIS phase 2 Vdiag 14

With the ignition off, measure the voltage across the battery terminals.
If the voltage is below **11.5 V**, recharge and test the battery.
If necessary replace the battery, then check the charge circuit.
With the ignition on, and the starter operating, measure the battery voltage across the terminals.
If the voltage drops below **9.6 V**, check the tightness and condition of the battery terminals.
Recharge and test the battery.
If necessary replace the battery, then check the charge circuit.

If the starter is driving the engine correctly, but the fault is still present:
– Check **for + 12 V after ignition** on:
Track **G1** of the injection computer black connector **A**
Track **E1** of brown connector **B** from the injection computer
If there is no feed to these tracks, check the condition of fuse **FM3 (30A)** on the fuse board.
Replace if necessary.
– Check the condition of the injection computer supply voltage **relay R8**.
Repair the contacts or replace them if necessary.
– Check the **continuity and absence of interference resistance** of the following connections:
Track 15 of relay **R8** ⟶ **Track E1** of brown connector **B** of the injection computer
Track 13 of relay **R8** ⟶ **Track G1** of black connector **A** of the injection computer
Repair if necessary.

AFTER REPAIR	Deal with any faults. Carry out a road test followed by another check with the diagnostic tool.

GETtheMANUALS.org

DF047 PRESENT OR STORED	COMPUTER SUPPLY VOLTAGE 1.DEF : voltage outside tolerances

NOTES	**Conditions for applying the fault finding procedure to stored faults:** The fault is declared present after several starting attempts, or with the engine running.
	Special notes: Computer operating voltage: **9 V < operating voltage < 16 V**. If the battery voltage is too low this may cause the **level 1** fault warning light to come on. It is then not possible to start the engine. Use bornier **Elé. 1681** for any operations on the injection computer connectors.

Check the condition of the fuses **FM3 30A** and **FM6 10A**.
Replace if necessary.
Remove the computer supply relay **R8** and check that it is working properly. If it is faulty, replace it.
Check the **+ 12 V after ignition feed** to the following tracks:
– **Track G1** of the injection computer black connector A
– **Track D1** of the injection computer black connector A
If there is no feed on **track G1** of the injection computer black connector A, check **the continuity and make sure there is no interference resistance** between:

Track G1 ⟶ Relay mounting **R8 track 13**

Repair if necessary.
If there is no feed on **track D1** of the injection computer black connector A, check **the continuity and make sure there is no interference resistance** between:

Track D1 ⟶ Engine fuse and relay box **track 28**

Repair if necessary.

If all these checks have been carried out and there are no faulty components, check **the continuity and that there is no interference resistance** between:

Injection computer **brown connector B track E1** ⟶ Relay mounting **R8 track 15**

Repair if necessary.
If the fault is still present, contact the Techline.

AFTER REPAIR	Deal with any faults. Carry out a road test followed by another check with the diagnostic tool.

GETtheMANUALS.org

DF050 PRESENT OR STORED	BRAKE SWITCH CIRCUIT 1.DEF : Open circuit or short circuit 2.DEF : Inconsistent signal

NOTES	**Conditions for applying the fault finding procedure to a stored fault:** The fault is declared present after the brake pedal is depressed, or during a road test.
	Special notes: If the fault is present, cruise control is deactivated. Use bornier **Elé. 1681** for any operations on the injection computer connectors.

WARNING
This fault may appear if the wiring harness has been damaged.
Follow the procedure described in the Wiring Check in the Introduction.
This check enables the condition and the conformity of the engine wiring harness to be checked.

1.DEF	***NOTES***	***IMPORTANT** Two types of switch are used. Only the track assignments are different: The first type uses tracks A1, B3, A3 and B1, The second uses tracks 1, 2, 3 and 4.

Check the brake pedal switch connections.
Check the condition and adjustment of the brake pedal switch.
Repair if necessary.

Check the continuity and the absence of interference resistance on the following connection:
Injection computer **black 32-track connector A, track E4** ⟶ **Track 3 or A3*** of the brake switch
Repair if necessary.
Check the conformity of the switch by consulting the interpretation of statuses **ET704 Brake switch no. 1** and **ET705 Brake switch no. 2**.
If the fault is still present, carry out fault finding on the ABS computer.

AFTER REPAIR	Deal with any faults. Carry out a road test followed by another check with the diagnostic tool.

GETtheMANUALS.org

DF050 **CONTINUED**	

2.DEF	***NOTES***	***IMPORTANT** Two types of switch are used. Only the track assignments are different: The first type uses tracks A1, B3, A3 and B1, The second uses tracks 1, 2, 3 and 4.

Check the brake pedal switch connections.
Check the condition and adjustment of the brake pedal switch.
Repair if necessary.

Check **the conformity of the** brake light switch:

Brake pedal released:	continuity between **tracks 3** and **4** or **A3** and **B1***
Brake pedal depressed:	infinite resistance between **tracks 1** and **2** or **A1** and **B3***
	infinite resistance between **tracks 3** and **4** or **A3** and **B1***
	continuity between **tracks 1** and **2** or **A1** and **B3***

Replace the switch if necessary.
Check the condition of fuse **1H (15A)** of the passenger compartment fuse and relay board.
Replace the fuse if necessary.
Check **the feeds** to the switch:

- **+12 V** after ignition ⟶ **track 2 or B3*** of the brake pedal switch connector
- **+12 V** battery ⟶ **track 4 or B1*** of the brake pedal switch connector (via the UCH)

Replace the switch if necessary.
Check **the continuity and insulation** of the following connections:

- Injection computer black 32-track connector **A**, **track E4** ⟶ **Track 3 or A3*** of the brake pedal switch connector

Repair if necessary.

AFTER REPAIR	Deal with any faults. Carry out a road test followed by another check with the diagnostic tool.

GETtheMANUALS.org

DF051 PRESENT OR STORED	CRUISE CONTROL/SPEED LIMITER FUNCTION 1.DEF : inconsistent signal 2.DEF : inconsistent vehicle speed 3.DEF : controls at the steering wheel

NOTES	**Conditions for applying the fault finding procedure to a stored fault:** The fault is declared present after the engine is started or following a road test.
	Special notes: The cruise control/speed limiter function is inhibited. Use bornier **Elé. 1681** for any operations on the injection computer connectors.

WARNING
This fault may appear if the wiring harness has been damaged.
Follow the procedure described in the Wiring Check in the Introduction.
This check enables the condition and the conformity of the engine wiring harness to be checked.

If the fault is declared present, refer to the section of the conformity check on the **Cruise control/Speed limiter**, and to the interpretation of statuses:
ET042 Cruise control/Speed limiter,
ET413 Cruise control/Speed limiter function,
ET556 Driver's deactivation of the cruise control/speed limiter,
ET557 Cruise control/speed limiter deactivation by function.

Check that by pressing the buttons the statuses change and that, with the ignition switched on, all the values are correct.

If the fault is still present, contact the Techline.

AFTER REPAIR	Deal with any faults. Carry out a road test followed by another check with the diagnostic tool.

GETtheMANUALS.org

DF053 PRESENT OR STORED	RAIL PRESSURE REGULATION FUNCTION CC.1 : short circuit to + 12 V CC.0 : short circuit to earth CO : open circuit 1.DEF : internal electronic fault 2.DEF : pressure measured too low 3.DEF : pressure measured too high 4.DEF : insufficient pressure 5.DEF : pressure < minimum 6.DEF : pressure > maximum 7.DEF : significant pump control

NOTES	**Conditions for applying the fault finding procedure to a stored fault:** The fault is declared present following a road test or after attempting to start the engine.
	Special notes: If the fault is present: – It is not possible to start the engine. – the level 2 warning light is lit. Use bornier **Elé. 1681** for any operations on the injection computer connectors.

CC.1	***NOTES***	None.

Check the rail pressure regulator connectors.
Check the injection computer connections.
Check the low pressure circuit and the fuel conformity by running **test 2 Low pressure circuit check and test 7 Diesel fuel conformity check**.
Check the injector return flow, run **test 10 Poor injector operation.**
Check the operation of the overpressure valve if fitted to the vehicle, run test **8 Incorrect operation of the overpressure valve**.
Repair if necessary.

Measure the **resistance** of the fuel temperature sensor between its **tracks 1** and **2**.
If the resistance is not: **3 Ω ± 0.4 at 20°C**, replace the fuel flow actuator.
Check **the continuity and the insulation against +12 V** of the following connection:
Injection computer brown 48-track connector **B**, **track M4** ⟶ **Track 2** of the fuel flow actuator

If the fault is still present replace the rail pressure regulator.

AFTER REPAIR	Deal with any faults. Carry out a road test followed by another check with the diagnostic tool.

GETtheMANUALS.org

DF053 **CONTINUED 1**	

CC.0 ***CO***	***NOTES***	None.

Check the fuel flow regulator connections. Check the injection computer connections. Check the low pressure circuit and the fuel conformity by running **test 2 Low pressure circuit check and test 7 Diesel fuel conformity check**. Check the injector return flow, run **test 10 Poor injector operation.** Check the operation of the overpressure valve if fitted to the vehicle, run test **8 Incorrect operation of the overpressure valve**. Repair if necessary.
Measure the **resistance** across **tracks 1** and **2** of the flow regulator. If the resistance is not: **3 Ω ± 0.4 at 20°C**, replace the fuel flow regulator. Check **the continuity and insulation** to earth of the following connection: Injection computer brown 48-track connector **B**, **track M4** ⟶ **Track 2** of the fuel flow regulator With the ignition on, check for the **+ 12 V** after relay feed on **track 1** of the fuel flow regulator.
If the fault is still present, replace the fuel flow regulator.

AFTER REPAIR	Deal with any faults. Carry out a road test followed by another check with the diagnostic tool.

GETtheMANUALS.org

DF053 **CONTINUED 2**	

1.DEF	***NOTES***	None.

Check the rail pressure regulator connectors.
Check the injection computer connections.
Check the low pressure circuit and the fuel conformity by running **test 2 Low pressure circuit check and test 7 Diesel fuel conformity check**.
Check the injector return flow, run **test 10 Poor injector operation.**
Check the operation of the overpressure valve if fitted to the vehicle, run test **8 Incorrect operation of the overpressure valve**.
Repair if necessary.

Measure the **resistance** across **tracks 1** and **2** of the flow regulator.
If the resistance is not: **3 Ω ± 0.4 at 20°C**, replace the fuel flow regulator.
Check continuity and make sure there is no interference resistance on the following connection:
Injection computer brown 48-track connector **B**, **track M4** ⟶ **Track 2** of the fuel flow regulator
With the ignition on, check for the **+ 12 V** after relay feed on **track 1** of the fuel flow regulator.

If the fault is still present, **check that the computer output is working correctly**.

● **Either using an ammeter:**
With the solenoid valve connected, connect the current clamp to the **track 1** connection of the solenoid valve (in the direction of the current).
Clear any fuel pressure solenoid valve fault, then run command **AC035 Fuel pressure solenoid valve** :
➡ The ammeter should display ten cycles of two successive currents: **~ 0.6 A** then **~ 2 A**

● **Using a voltmeter:**
With the solenoid valve connected, connect the voltmeter earth lead to **track 2** of the fuel pressure solenoid valve and the positive cable to **track 1**. Clear any fuel pressure solenoid valve fault, then run command **AC035 Fuel pressure solenoid valve** :
➡ The voltmeter should display two voltages in succession ~ = battery voltage X OCR* in progress,
That is, successively: **~ 3.15 V** for an OCR* of **25%** then **~ 9.45 V** for an OCR* of **75%** (ten cycles)

● **Or using an oscilloscope** (range **5 V**/div and time base **1 ms/div**):
With the solenoid valve connected, connect the oscilloscope earth to the battery earth and the positive test pin to **track 2** of the fuel pressure solenoid valve; clear any fuel pressure solenoid valve faults then run command **AC035 Fuel pressure solenoid valve**:
➡ the oscilloscope should display a square pulse signal with an amplitude of **12.5 V** at a frequency of **185 Hz** (with an OCR* alternating successively from **25 to 75%**).

*Opening cyclic ratio

AFTER REPAIR	Deal with any faults. Carry out a road test followed by another check with the diagnostic tool.

GETtheMANUALS.org

DF053 **CONTINUED 3**	

2.DEF at 7.DEF	***NOTES***	None.

Check the operation of the overpressure valve if fitted to the vehicle, run test **8 Incorrect operation of the overpressure valve**.

In the event of rail overpressure:
Check the operation of the injectors: see **13B, Component testing, Test 10 Poor injector operation**.
Check that the rail pressure sensor is operating correctly using command **AC035 Fuel pressure solenoid valve**.
Display parameter **PR038 Rail pressure**, and refer to the conformity check to check the operating values.
If these checks do not reveal any faults, and if the fault is still present, replace the rail pressure regulator.

in the event of rail underpressure:
Check that the rail pressure sensor is operating correctly using command **AC035 Fuel pressure solenoid valve**.
Display parameter **PR038 Rail pressure** and refer to the conformity check to check the conformity of the operating values.
Check the low pressure diesel circuit priming.
Check the conformity of the diesel filter connections.
Check the condition of the filter (clogging and water saturation).
Check that there are no air bubbles between the filter and the high pressure pump.
Check the low and high pressure diesel fuel circuit sealing (visual inspections, odour, etc.): pump housing, pressure relief valve, pipes, rail and injector unions, injector wells, etc.
Check the conformity of the seal fitting on the pressure regulator.
Check the operation of the injectors: see **13B, Component testing, Test 10 Poor injector operation**.
Carry out the necessary operations.
If the fault is still present replace the rail pressure regulator.

AFTER REPAIR	Deal with any faults. Carry out a road test followed by another check with the **diagnostic tool**.

GETtheMANUALS.org

DF054 PRESENT OR STORED	TURBOCHARGING SOLENOID VALVE CONTROL CIRCUIT CC.1 : short circuit to + 12 V CC.0 : short circuit to earth CO : open circuit 1.DEF : internal electronic fault 2.DEF : signal incoherence 3.DEF : signal outside lower limit 4.DEF : signal outside upper limit 5.DEF : permanent high signal

NOTES	**Conditions for applying the fault finding procedure to stored faults:** The fault is declared present after: – the engine is started, – a road test, – actuator command **AC004 Turbocharging solenoid valve**.
	Special notes: If the fault is present: – turbocharging is no longer authorised, – the EGR function is inhibited, – the level 1 warning light is lit, – the vehicle lacks performance. – the **OBD** indicator light will illuminate after three consecutive driving cycles (starting + 5 seconds + switch off the ignition and wait for the message to appear on the **diagnostic tool: "Loss of dialogue with the computer: EDC16 C3, check the tool connection and the computer supply"**). Use bornier **Elé. 1681** for any operations on the injection computer connectors.

CC.1	***NOTES***	None.

Check the turbocharging solenoid valve connections. Check the injection computer connections. Repair if necessary.
Measure the resistance of the turbocharging solenoid valve between **tracks 1** and **2**: If the resistance displayed is not **15.4 Ω ± 0.7 at 20°C**, replace the turbocharging solenoid valve
Check the **continuity and insulation from the + 12 V feed** of the following connection: Injection computer grey 32-track connector **C**, **track E1** ⟶ **Track 1** turbocharging solenoid valve Repair if necessary.
If the fault is still present, replace the turbocharging solenoid valve.

AFTER REPAIR	Deal with any faults. Carry out a road test followed by another check with the diagnostic tool.

GETtheMANUALS.org

DF054 **CONTINUED 1**	

CC.0 ***CO***	***NOTES***	None.

Check the turbocharging solenoid valve connections. Check the injection computer connections. Repair if necessary.
Measure the resistance of the turbocharging solenoid valve between **tracks 1** and **2**: If the resistance displayed is not **15.4 Ω ± 0.7 at 20°C**, replace the turbocharging solenoid valve.
Check the **continuity and insulation against earth** of the following connections: Injection computer grey 32-track connector **C**, **track E1** ⟶ **Track 1** turbocharging solenoid valve Check for + 12 V after relay feed on track 2 of the turbocharging solenoid valve connector. Repair if necessary.
If the fault is still present, replace the turbocharging solenoid valve.

AFTER REPAIR	Deal with any faults. Carry out a road test followed by another check with the diagnostic tool.

GETtheMANUALS.org

DF054 **CONTINUED 2**	

1.DEF to 5.DEF	***NOTES***	None.

Check the turbocharging solenoid valve connections.

Check the injection computer connections.

Repair if necessary.

Measure the resistance of the turbocharging solenoid valve between **tracks 1** and **2**:
If the resistance displayed is not **15.4 Ω ± 0.7 at 20°C**, replace the turbocharging solenoid valve.

Check **the continuity and insulation against earth** of the following connection:
Injection computer brown 48-track connector **B**, **track G4** ⟶ **Track 1** turbocharging solenoid valve

Check for + 12 V after relay feed on track 2 of the turbocharging solenoid valve connector.
If the fault is still present, **check that the computer output is working correctly**.
With the turbocharging solenoid valve connected:
Using a voltmeter:
– Connect the positive terminal of the voltmeter to **track 2** of the solenoid valve and the negative terminal to **track 1**,
– Clear any solenoid valve faults and run command **AC004 Turbocharger solenoid valve**.
– The voltmeter should display **ten cycles** of two successive voltages: **~ 2.5 V** (OCR of **20%**) then **~ 8.75 V** (OCR* of **70%**).
Using an oscilloscope (at 5 V/division range and 1 ms/division time base):
Connect the negative terminal of the oscilloscope to the battery earth and the positive **track 2** of the solenoid valve.
Clear any solenoid valve faults and run command **AC004 Turbocharging solenoid valve**.
– The oscilloscope should display a square wave signal with an amplitude of **12.5V** (equal to the battery voltage) at a frequency of **140 Hz** (with an OCR changing successively from **~ 20 to ~ 70%**).
– if the measurement is correct, replace the solenoid valve.
– if the measurement does not show any control or continuous voltage, contact the techline.

***Opening cyclic ratio**

AFTER REPAIR	Deal with any faults. Carry out a road test followed by another check with the diagnostic tool.

GETtheMANUALS.org

DF055 PRESENT OR STORED	TURBOCHARGING PRESSURE REGULATION CIRCUIT 1.DEF : pressure too low 2.DEF : pressure too high

NOTES	**Conditions for applying the fault finding procedure to stored faults:** The fault is declared present after: – the engine is started, – a road test.
	Special notes: If the fault is present: – turbocharging is no longer authorised, – the EGR function is inhibited, – the **level 1** warning light is illuminated. Use bornier **Elé. 1681** for any operations on the injection computer connectors.
	IMPORTANT The fault can result in a rapid and significant fouling of the particle filter.

1.DEF	***NOTES***	None.

Check the turbocharger pressure sensor connections.
Check the connections of the turbocharging pressure relief solenoid valve.
Check the injection computer connections.
Repair if necessary.

Check the sealing of the high pressure air circuit:
– disconnected or pierced pipes,
– pressure sensor disconnected or poorly fitted (seal present),
– intercooler pierced (to check the intercooler: with the vehicle stationary, stabilise the engine speed between 3,500 and 4,000 rpm and check that there are no leaks).

Check the conformity of the turbocharging pressure signal and apply test 5 and test 6.

AFTER REPAIR	Deal with any faults. Carry out a road test followed by another check with the diagnostic tool.

GETtheMANUALS.org

DF055 **CONTINUED 1**	

Check that the turbocharger and the control circuit are working:
– With the engine stopped, make sure that the control rod is in the resting position.
– Start the engine and make sure that the control rod operates to the upper stop.
(when the engine stops, the control rod should return to the rest position).
If the control rod does not move correctly, carry out the following checks:
1) Vacuum pressure command check:
– disconnect the solenoid valve inlet **hose** and connect it to a pressure gauge,
– start the engine and stabilise it at idle speed,
– If the vacuum does not reach **800 mbar ± 100**: check the vacuum pressure circuit from the vacuum pump,
– stop the engine, reconnect the inlet hose and proceed to step 2.
2) Solenoid valve control check:
– Disconnect the solenoid valve outlet **hose**,
– start the engine and stabilise it at idle speed,
– place your hand on the solenoid valve and block the outlet **connection** with your thumb,
– if there is no detectable vibration of the solenoid valve, check that the computer output is operating correctly (see **DF054 Turbocharging solenoid valve control circuit 1.DEF**).
3) Solenoid valve operation check:
– Attach the pressure gauge to the solenoid valve outlet **union**,
– start the engine and stabilise it at idle speed,
– if the vacuum pressure does not reach **800 mbar ± 100**, replace the solenoid valve.

AFTER REPAIR	Deal with any faults. Carry out a road test followed by another check with the diagnostic tool.

GETtheMANUALS.org

DF055 **CONTINUED 2**	

2.DEF	***NOTES***	**Priority when dealing with a number of faults:** Deal with fault **DF004 Turbocharger pressure sensor circuit** first if it is present or stored.

Check the turbocharger pressure sensor connections.
Check the connections of the turbocharging pressure relief solenoid valve.
Check the injection computer connections.
Repair if necessary.

Check the conformity of the turbocharging pressure signal (refer to the interpretation of parameter **PR041 Turbocharging pressure**).

Make sure the turbocharging pressure relief solenoid valve is not jammed open:
– With the engine switched off, disconnect the **inlet and outlet hoses** from the solenoid valve.
– connect a vacuum pump to the inlet **union** and apply a vacuum pressure.
– if the vacuum pressure **is not maintained**: replace the solenoid valve.

Check that the turbocharger control rod has not seized:
– with the engine stopped, make sure the turbocharger control rod is in the rest position.
– apply a vacuum pressure of **800 mbar ± 100**, to the hose connected to the turbocharger control diaphragm,
– If the diaphragm holds the vacuum pressure, check the movement and setting of the turbocharger control rod,
– Laguna ph1 (see **MR 339, 12, Turbocharging, Pressure adjustment**),
– Laguna ph2 (see **MR 395, 12B, Turbocharging, Turbocharging pressure regulation valve**),
– Velsatis (see **MR 353, 12B, Turbocharging, Turbocharging pressure regulation valve**).
If the control rod is seized, replace the turbocharger.
If the fault is still present, apply test 5 and test 6.

AFTER REPAIR	Deal with any faults. Carry out a road test followed by another check with the diagnostic tool.

GETtheMANUALS.org

DF056 PRESENT OR STORED	AIR FLOWMETER CIRCUIT CC.1 : short circuit to + 12 V CO.0 : open circuit or short circuit to earth 1.DEF : offset at minimum threshold 2.DEF : offset at maximum threshold 3.DEF : parameter at maximum limit 4.DEF : parameter at minimum limit

NOTES	**Conditions for applying the fault finding procedure to stored faults:** The fault is declared present after a road test.
	Special notes: Use bornier **Elé. 1681** for any operations on the injection computer connectors.

CC.1	***NOTES***	None.

Check the air flowmeter connections.
Check the injection computer connections.
Repair if necessary.

Check the continuity and the insulation to **+ 12 V** of the following connections:

Injection computer brown 48-track connector B, **track G2** → **Track 1** air flow sensor
Injection computer brown 48-track connector B, **track E2** → **Track 2** air flow sensor
Injection computer brown 48-track connector B, **track G1** → **Track 5** air flow sensor
Engine **earth** → **Track 6** air flow sensor

If the fault is still present, replace the air flowmeter.

AFTER REPAIR	Deal with any faults. Carry out a road test followed by another check with the diagnostic tool.

GETtheMANUALS.org

DF056 **CONTINUED 1**	

CO.0	***NOTES***	None.

Check that there is a + 5 V supply on track 3 of the air flowmeter.
Repair if necessary.
Check the air flowmeter connections.
Check the injection computer connections.
Repair if necessary.

Check the continuity and insulation **from earth** of the following connections:

Injection computer brown 48-track connector B, **track E2** → **Track 2** air flow sensor
Injection computer brown 48-track connector B, **track B4** → **Track 3** air flow sensor
Injection computer brown 48-track connector B, **track G1** → **Track 5** air flow sensor

Check for the presence of **+ 12 V after relay** on **track 4** of the air flow sensor connector.
Run **TEST 4 Air flowmeter**.
Repair if necessary.
If the fault is still present and remains present, replace the air flowmeter.

AFTER REPAIR	Deal with any faults. Carry out a road test followed by another check with the diagnostic tool.

GETtheMANUALS.org

DF056 **CONTINUED 2**	

1.DEF at 4.DEF	***NOTES***	**Conditions for applying the fault finding procedure to a stored fault:** The fault is declared present after the ignition has been switched off for **1 minute**.

Check the air flowmeter connections.
Check the injection computer connections.
Repair if necessary.

Check the continuity and the absence of interference resistance on the following connections:

Injection computer brown 48-track connector B, **track B4** → **Track 3** air flow sensor
Injection computer brown 48-track connector B, **track G1** → **Track 5** air flow sensor
Earth → **Track 6** air flow sensor
Injection computer brown 48-track connector B, **track E2** → **Track 2** air flow sensor

Check for **+12 V after relay** on **track 4** of the air flow sensor connector.
Repair if necessary.
If the fault is still present, apply **test 3: Checking the turbocharged air inlet circuit** and **test 4: Air flow sensor**,
– check that the damper valve is open (valve control **pushing on the body** of the air vent unit)
– with the flow sensor **connected**, the vehicle **ignition on** and **engine stopped**:
– Check the voltage between **tracks 2** and **5** of the flowmeter:
If the value is not **0.6 V ± 0.1**, replace the air flow sensor.

● **Check the EGR valve is not jammed open:**
– Deal with any faults.
– Use the conformity check and the **EMISSION CONTROL/OBD** sub-function.

If these checks show that the valve is jammed or irrevocably seized, replace the EGR valve.
If no faults are revealed, but the fault is still present, replace the air flowmeter.

AFTER REPAIR	Deal with any faults. Carry out a road test followed by another check with the diagnostic tool.

GETtheMANUALS.org

DF057 PRESENT OR STORED	WATER IN DIESEL FUEL DETECTOR CIRCUIT

NOTES	**Conditions for applying the fault finding procedure to stored faults:** The fault is declared present after the engine is started or following a road test.

Check the conformity and quality of the fuel by running **test 7 Diesel fuel conformity check**.
Check the sealing of the low pressure circuit and tank.

A) Make sure the water in diesel fuel detection sensor is properly connected.
– If not, clear the fault,
– Carry out a road test (**speed > 12 mph (20 km/h) and engine speed > 1200 rpm**) for more than **30 seconds**.
– If the fault does not reappear, end of fault finding procedure.
– If the fault does recur, go to **step B**.

B) If the sensor is properly connected:
– Bleed the diesel filter unit,
– Velsatis (see **MR 353, 13A, Fuel supply, Diesel filter**),
– Laguna phase 2 (see **MR 395, 13A, Fuel supply, Diesel filter**),
– Laguna phase 1 (see **MR 339, 13, Fuel supply, Diesel filter**),
– Clear the fault.
– Carry out a road test (**speed > 12 mph (20 km/h) and engine speed > 1200 rpm**) for more than **30 seconds**.
***If the fault does not recur**, end the fault finding procedure.*

C) If the fault recurs:
– Check for **continuity and the absence of interference resistance** on the connection between:
Injection computer grey 32-track connector C, track A2 ⟶ **Track 3** of the water detection sensor
Check the power supply to the water detection sensor:
+12 V after relay ⟶ **track 1** water detection sensor
earth ⟶ **track 2** water detection sensor
Carry out the necessary repairs.
If none of these checks reveal any faults:
– Replace the water detection sensor,
– Clear the fault.
– Carry out a road test (**speed > 12 mph (20 km/h) and engine speed > 1200 rpm**) for more than **30 seconds**, to confirm the repair.
Note:
If the level of water in the fuel filter unit is lower than the two electrodes on the sensor, certain driving conditions (on a bend, leaning) may cause the injection warning light **to light up erratically** .

AFTER REPAIR	Deal with any faults. Carry out a road test followed by another check with the diagnostic tool.

GETtheMANUALS.org

DF069 PRESENT	IMPACT DETECTED SIGNAL

NOTES	**Fault finding procedure application conditions:** Only apply the procedure if the fault is present and if the vehicle does not start.
	Special notes: The fault appears when the injection computer receives a frontal impact signal from the Airbag computer via the multiplex network. As soon as the injection computer receives this signal, engine operation is inhibited and the level 2 warning light is lit. Use bornier **Elé. 1681** for any operations on the injection computer connectors.

If the vehicle has been involved in an accident:
Carry out any necessary repairs,
– clear the fault,
– switch off the ignition and wait for the message to appear on the **diagnostic tool: "Loss of dialogue with the computer: EDC16 C3, check the tool connection and the computer supply"**,
– wait for the engine immobiliser indicator light to flash,
– switch on the ignition,
If the fault does not reappear, end of fault finding procedure.
If the fault recurs, carry out fault finding on the **AIRBAG** computer.

If the vehicle has not been involved in an accident, carry out fault finding on the **AIRBAG** computer.

AFTER REPAIR	Deal with any faults. Carry out a road test followed by another check with the diagnostic tool.

GETtheMANUALS.org

DF070 PRESENT OR STORED	CLUTCH SWITCH CIRCUIT 1.DEF : no signal 2.DEF : inconsistent signal

NOTES	**Conditions for applying the fault finding procedure to stored faults:** The fault is declared present after the clutch pedal is depressed, or during a road test.
	Special notes: Use bornier **Elé. 1681** for any operations on the injection computer connectors.

***IMPORTANT:**
Two types of switch are used. Only the track assignments are different:
– the first type uses tracks A1 and B3,
– the second uses tracks 1 and 2.

WARNING
This fault may appear if the wiring harness has been damaged.
Follow the procedure described in the Wiring Check in the Introduction.
This check enables the condition and the conformity of the engine wiring harness to be checked.

Check the conformity and adjustment of the clutch switch (position, connection).
– Display status **ET233 Clutch pedal** :
– when the clutch pedal is not being depressed status **ET233** should be **RELEASED**,
– when the clutch pedal is disengaged status **ET233** should be **DEPRESSED**,
If these checks are not OK, replace the clutch switch.

If these checks are correct:
Check the connections of the clutch pedal switch.
Check the injection computer connections.
Repair if necessary.

Check continuity and make sure there is no interference resistance on the following connection:
Injection computer black 32-track connector A, **track C4** ⟶ **Track 2 or A1*** Clutch pedal switch
Earth ⟶ **Track 1 or B3*** clutch pedal switch
Repair if necessary.
Repair if necessary.
If the fault is still present, contact the Techline.

AFTER REPAIR	Deal with any faults. Carry out a road test followed by another check with the diagnostic tool.

GETtheMANUALS.org

DF091 PRESENT OR STORED	VEHICLE SPEED SIGNAL 1.DEF : inconsistent signal 2.DEF : signal outside upper limit 3.DEF : configuration absent or incorrect 4.DEF : multiplex line connection fault

NOTES	**Conditions for applying the fault finding procedure to stored faults:** The fault is declared present during a road test.
	Special notes: Use bornier **Elé. 1681** for any operations on the injection computer connectors.

Check the ABS computer connections.
Check the injection computer connections.
Repair if necessary.
Carry out a fault finding procedure on the multiplex network and ABS.
Refer to the fault finding notes for the vehicle when dealing with any faults.
If the fault is still present, contact the Techline.

AFTER REPAIR	Deal with any faults. Carry out a road test followed by another check with the diagnostic tool.

GETtheMANUALS.org

DF097 PRESENT OR STORED	CAMSHAFT SENSOR CIRCUIT 1.DEF : no signal 2.DEF : inconsistent signal

NOTES	**Conditions for applying the fault finding procedure to a stored fault:** The fault is declared present after the engine is started or following a road test. A drop in engine speed followed by nominal behaviour from the vehicle is possible.
	Special notes: Use bornier **Elé. 1681** for any operations on the injection computer connectors.

1.DEF ***2.DEF***	***NOTES***	**Priority when dealing with a number of faults:** Deal with fault **DF046 Battery voltage** first if it is present or stored.

Check the camshaft sensor connections.
Check the injection computer connections.
Check that the camshaft sensor is correctly positioned and mounted.
Also check the general condition, (damaged housing, heating up, etc.)
Carry out the necessary repairs.

Check **the continuity and absence of interference resistance** of the following connections:
Injection computer brown 48-track connector **B**, **track D1** ⟶ **Track 2** Camshaft sensor
Injection computer brown 48-track connector **B**, **track A1** ⟶ **Track 1** Camshaft sensor
With the ignition on and the camshaft sensor **connected**:
Use a voltmeter to measure the voltage between **tracks 1** and **3** of the camshaft sensor:
The voltage displayed should be equal to the battery voltage **0.08 V**)
– If the voltage is outside permitted tolerance values, take the measurement again on the connector, with the **camshaft sensor disconnected**,
– If the voltage is still outside the permitted tolerance values with the sensor disconnected, check **the continuity and absence of interference resistance** on the following connection:
Camshaft sensor, **track 3** ⟶ **+ after ignition feed after relay**
– If the measured voltage is correct with the sensor disconnected, measure the camshaft sensor resistance between tracks 2 and 3.
Replace the sensor if its resistance is not 10,250 ± 500 Ω at 20°C.
If the fault is still present, contact the Techline.

AFTER REPAIR	Deal with any faults. Carry out a road test followed by another check with the diagnostic tool.

GETtheMANUALS.org

DF098 PRESENT OR STORED	FUEL TEMPERATURE SENSOR CIRCUIT CC.0 : short circuit to earth CO.1 : short circuit to + 12 V

NOTES	**Conditions for applying the fault finding procedure to a stored fault:** The fault is declared present after an attempt to start engine.
	Special notes: – use bornier **Elé. 1681** for any operations on the injection computer connectors, – the default value is 40°C.

CC.0	***NOTES***	None.

Check the fuel temperature sensor connectors.
Check the injection computer connections.
Repair if necessary.

Measure the fuel temperature sensor **resistance** across **tracks 1** and **2**.
Replace the fuel temperature sensor if the resistance is not approximately:

3820 Ω ± 282 Ω at 20°C
2050 Ω ± 100 Ω at 25°C
810 Ω ± 47 Ω at 50°C

Check the **continuity** and the **insulation** against earth of the following connection:
Injection computer brown 48-track connector **B**, **track H2** ⟶ **Track 1** fuel temperature sensor
Check the continuity and insulation from earth of the following connection:
Injection computer grey 32-track connector **C**, **track F1** ⟶ **Track 2** fuel temperature sensor
If the fault is still present, replace the fuel temperature sensor.

AFTER REPAIR	Deal with any faults. Carry out a road test followed by another check with the diagnostic tool.

GETtheMANUALS.org

DF098 **CONTINUED**	

CO.1	***NOTES***	None.

Check the fuel temperature sensor connectors.
Check the injection computer connections.
Repair if necessary.

Measure the fuel temperature sensor **resistance** across **tracks 1** and **2**.
Replace the fuel temperature sensor if the resistance is not approximately:

3820 Ω ± 282 Ω at 20°C
2050 Ω ± 100 Ω at 25°C
810 Ω ± 47 Ω at 50°C

Check the continuity, insulation, and the absence of interference resistance of the following connection:
Injection computer brown 48-track connector **B**, **track H2** ⟶ **Track 1** fuel temperature sensor
If the fault is still present, replace the fuel temperature sensor.

AFTER REPAIR	Deal with any faults. Carry out a road test followed by another check with the diagnostic tool.

GETtheMANUALS.org

DF114 PRESENT OR STORED	EGR SOLENOID VALVE CIRCUIT 1.DEF : excessive EGR valve flow

NOTES	**Conditions for applying the fault finding procedure to stored faults:** The fault is declared present after: – the engine is started, – a road test.
	Special notes: If the fault is present: – the EGR function is inhibited. Use bornier **Elé. 1681** for any operations on the injection computer connectors.
	Priority when dealing with a number of faults: Apply the procedure for dealing with fault **DF272 EGR valve control circuit** first if it is present or stored.

Check the EGR valve connections.
Check the injection computer connections.
Repair if necessary.

Check the continuity and the absence of interference resistance on the following connections:
Injection computer brown 48-track connector **B**, **track C2** → **Track 1** EGR valve
Injection computer brown 48-track connector **B**, **track D2** → **Track 5** EGR valve

Measure the **resistance** of the EGR valve motor between **tracks 1** and **5**.
If the resistance displayed is not between 1 and 400 Ω, replace the exhaust gas recirculation valve.

When replacing the EGR valve, run command **SC036 Reinitialise programming** to initialise the EGR valve offsets

Check that there are no leaks on the EGR circuit (pipes pierced or damaged) and that the clamps are properly tightened.

AFTER REPAIR	Deal with any faults. Carry out a road test followed by another check with the diagnostic tool.

GETtheMANUALS.org

DF114 CONTINUED	

If the fault is still present, run command **SC036 Reset programming** and select **EGR valve** to reset the EGR valve offsets.
(see **Replacement of components**).
If the valve is jammed or irrevocably seized, replace the EGR valve.

WARNING
A programming procedure is required when the EGR valve is replaced.
Reinitialise the first EGR valve offset and last EGR valve offset parameters.
Refer to **Replacement of components** to carry out this programming.

AFTER REPAIR	Deal with any faults. Carry out a road test followed by another check with the diagnostic tool.

GETtheMANUALS.org

DF118 PRESENT OR STORED	EGR SOLENOID VALVE SERVO-CONTROL 1.DEF : insufficient EGR valve flow 2.DEF : excessive EGR valve flow

NOTES	**Conditions for applying the fault finding procedure to stored faults:** The fault is declared present after: – the engine is started, – a road test.
	Special notes: If the fault is present: – the EGR function is inhibited, – possible fumes at the exhaust pipe. Use bornier **Elé. 1681** for any operations on the injection computer connectors.

Check the EGR valve connections.
Check the injection computer connections.
Repair if necessary.

Check the continuity and the absence of interference resistance on the following connections:
Injection computer brown 48-track connector **B**, **track C2** → **Track 1** EGR valve connector
Injection computer brown 48-track connector **B**, **track D2** → **Track 5** EGR valve connector

Measure the **resistance** of the EGR valve motor between **tracks 1** and **5**.
If the resistance displayed is not between 1 and 400 Ω, replace the EGR valve.

When replacing the EGR valve, run command **SC036 Reinitialise programming** to initialise the EGR valve offsets.

Check that there are no leaks on the EGR circuit (pipes pierced or damaged) and that the clamps are properly tightened.

AFTER REPAIR	Deal with any faults. Carry out a road test followed by another check with the diagnostic tool.

GETtheMANUALS.org

DF118 CONTINUED	

If the fault is still present, run command **SC036 Reset programming** and select **EGR valve** to reset the EGR valve offsets.
(see **Replacement of components**).
If the valve is jammed or irrevocably seized, replace the EGR valve.

WARNING
A programming procedure is required when the EGR valve is replaced. The EGR valve initial offset and EGR valve last offset parameters must be reinitialised. Refer to Replacement of components to carry out this programming.

AFTER REPAIR	Deal with any faults. Carry out a road test followed by another check with the diagnostic tool.

GETtheMANUALS.org

DF176 PRESENT OR STORED	LOW-SPEED FAN ASSEMBLY CIRCUIT CO : open circuit CC.0 : short circuit to earth CC.1 : short circuit to +12 V 1.DEF : signal incoherence

NOTES	**Conditions for applying the fault finding procedure to a stored fault:** The fault is declared present after: – an attempted start, or with engine running, – command **AC038 Low-speed fan unit** run.
	Special notes: Use bornier **Elé. 1681** for all operations on the computer connectors.

CO	***NOTES***	**None.**

Check the **+ 12 V** after relay feed to fan unit relay mounting **R09 track 10**.
Check the condition of the connections and the correct operation of relay **R09**
Replace it if necessary.
Check for **continuity and the absence of interference resistance** on the following connection:

Injection computer connector **C grey track B1** ⟶ Relay mounting **R09 track 11**

Repair if necessary.

CC.0	***NOTES***	None.

Check **the continuity and insulation from earth** of the following connection:

Injection computer supply relay mounting **R8 track 13** ⟶ Relay mounting of the low-speed fan unit **R09 track 10**

Repair if necessary.

AFTER REPAIR	Deal with any faults. Carry out a road test followed by another check with the diagnostic tool.

GETtheMANUALS.org

DF176 **CONTINUED**	

CC.1	***NOTES***	None.

Check the **continuity and insulation from the + 12 V feed** of the following connection:

Injection computer connector **C grey track B1** → Relay mounting **R09 track 11**

Repair if necessary.

1.DEF	***NOTES***	None.

Check the condition of the connections:
– on the low-speed fan unit relay connector,
– on the injection computer grey connector G.
Repair if necessary.
Check the following connections for **continuity and make sure there is no interference resistance**:

Injection computer connector **C grey track B1** → Relay mounting **R09 track 11**

Injection computer supply relay mounting **R8 track 13** → Relay mounting of the low-speed fan unit **R09 track 10**

Repair if necessary.

AFTER REPAIR	Deal with any faults. Carry out a road test followed by another check with the diagnostic tool.

GETtheMANUALS.org

DF177 PRESENT OR STORED	HIGH-SPEED FAN ASSEMBLY CIRCUIT CO : open circuit CC.0 : short circuit to earth CC.1 : short circuit to +12 V 1.DEF : signal incoherence

NOTES	**Conditions for applying the fault finding procedure to stored faults:** The fault is declared present after: – an attempted start, or with engine running, – command **AC039 High-speed fan unit** run.
	Special notes: Use bornier **Elé. 1681** for all operations on the computer connectors.

CO	***NOTES***	None.

Check the **+ 12 V** after relay feed to fan unit relay mounting **R10 track 6**.
Check the condition of the connections and the correct operation of relay **R10**.
Replace it if necessary.
Check the following connection for **continuity and make sure there is no interference resistance**:

Injection computer connector **C grey track F2** ⟶ Relay mounting **R10 track 7**

Repair if necessary.

CC.0	***NOTES***	None.

Check **the continuity and insulation from earth** of the following connection:

Injection computer supply relay mounting **R8 track 13** ⟶ Low speed fan unit relay mounting **R10 track 6**

Repair if necessary

AFTER REPAIR	Deal with any faults. Carry out a road test followed by another check with the diagnostic tool.

GETtheMANUALS.org

DF177 **CONTINUED**	

CC.1	***NOTES***	None.

Check the **continuity and insulation from the + 12 V feed** of the following connection:

Injection computer connector **C grey track B1** → Relay mounting **R10 track 7**

Repair if necessary.

1.DEF	***NOTES***	None.

Check the condition of the connections:
– on the fan unit relay R10 connector,
– on the injection computer grey connector G.
Repair if necessary.
Check the following connections for **continuity and make sure there is no interference resistance**:

Injection computer connector **C grey track F2** → Relay mounting **R10 track 7**

Injection computer supply relay mounting **R8** → Low speed fan unit relay mounting **R10 track 6 track 13**

Repair if necessary

AFTER REPAIR	Deal with any faults. Carry out a road test followed by another check with the diagnostic tool.

GETtheMANUALS.org

DF195 **STORED**	CAMSHAFT SENSOR / ENGINE SPEED CONSISTENCY 1.DEF : inconsistent signal

NOTES	**Conditions for applying the fault finding procedure to stored faults:** The fault becomes present after an attempt to start.
	Special notes: If the fault is **stored**, clear the fault from the computer memory. Switch off the ignition, start the engine and check that the fault does not reappear. Use bornier **Elé. 1590** for all operations on the injection computer connectors.

Check the engine **speed sensor** and **camshaft sensor** connectors.
Check the injection computer connections.
Repair if necessary.
Check the **continuity and the absence of interference resistance (connector disconnected)** on the following connections:

injection computer **connector B, track A1** ⟶ **track 1** of the camshaft sensor.
injection computer **connector B, track D1** ⟶ **track 2** of the camshaft sensor.
engine management computer **connector B, track B1** ⟶ **track 1** of the engine speed sensor.
engine management computer **connector B, track C1** ⟶ **track 2** of the engine speed sensor.

Repair if necessary.

With the ignition on and the camshaft sensor **connected**:
Use a voltmeter to measure the voltage between **tracks 1** and **3** of the camshaft sensor:
The voltage displayed should be equal to the battery voltage **0.08 V**)
– If the voltage is outside permitted tolerance values, take the measurement again on the connector, with the **camshaft sensor disconnected**,
– If the voltage is still outside permitted tolerance values with the sensor disconnected.
Check **for continuity and absence of interference resistance** on the following connection:

Camshaft sensor, **track 3** ⟶ **+ after ignition feed after relay**

– If the measured voltage is correct with the sensor disconnected.
Measure the camshaft sensor **resistance** between **tracks 1** and **3**.
Replace the sensor if its resistance is not **10,250 ± 500 Ω at 20°C**

Check that the engine speed sensor is correctly mounted and that the flywheel target is not damaged.
Check that the air gap between the engine speed sensor and the flywheel is **0.5 to 1.8 mm**.
Measure the **resistance** of the engine speed sensor between **tracks 1** and **2**.
Replace the sensor if its resistance is not **250 ± 50 Ω at 20°C**.

AFTER REPAIR	Deal with any faults. Carry out a road test followed by another check with the diagnostic tool.

GETtheMANUALS.org

DF209 PRESENT OR STORED	EGR POSITION SENSOR CIRCUIT CO.0 : open circuit or short circuit to earth CC.1 : Short circuit to +12 V

NOTES	**Conditions for applying the fault finding procedure to stored faults:** – the engine is started, – a road test.
	Special notes: If the fault is present: – the EGR offset fault finding function is deactivated and the OBD warning light will illuminate after three consecutive driving cycles (starting + 5 seconds + switch off the ignition and wait for the message to appear on the **diagnostic tool: "Loss of dialogue with the computer: EDC16 C3, check the tool connection and the computer supply"**). Use bornier **Elé. 1681** for any operations on the injection computer connectors.
	Priorities when dealing with a number of faults : Deal with fault **DF012 Sensor feed voltage no. 2** first, if it is present or stored.
	IMPORTANT This fault can result in a rapid and significant fouling of the particle filter. If the EGR valve needs to be replaced to resolve the fault, all faults must then be cleared.

WARNING
This fault may appear if the wiring harness has been damaged.
Follow the procedure described in the Wiring Check in the Introduction.
This check enables the condition and the conformity of the engine wiring harness to be checked.

AFTER REPAIR	Deal with any faults. Carry out a road test followed by another check with the diagnostic tool.

GETtheMANUALS.org

DF209 **CONTINUED 1**	

CO.0	***NOTES***	**None.**

Check the EGR valve connections.
Check the injection computer connections.
Repair if necessary.

Check the **continuity** and **insulation to earth** of the following connections:
Injection computer brown 48-track connector B, **track J2** ⟶ **Track 6** EGR valve
Injection computer brown 48-track connector B, **track F4** ⟶ **Track 2** EGR valve
Check the continuity of the following connection:
Injection computer grey 32-track connector C, **track C2** ⟶ **Track 4** EGR valve
Repair if necessary.

If the fault is still present, run command **SC036 Reset programming** and select **EGR valve** to reset the EGR valve offsets.
(see **Replacement of components**).
If the valve is jammed or irrevocably seized, replace the EGR valve.

WARNING
A programming procedure is required when the EGR valve is replaced. The EGR valve initial offset and EGR valve last offset parameters must be reinitialised. Refer to Replacement of components to carry out this programming.

AFTER REPAIR	Deal with any faults. Carry out a road test followed by another check with the diagnostic tool.

GETtheMANUALS.org

DF209 **CONTINUED 2**	

CC.1	***NOTES***	None.

Check the EGR valve connections.
Check the injection computer connections.
Repair if necessary.

Check **for continuity** and **insulation to + 12 V** on the following connections:
Injection computer brown 48-track connector B, **track J2** → **Track 6** EGR valve
Injection computer grey 32-track connector C, **track C2** → **Track 4** EGR valve
Injection computer brown 48-track connector B, **track F4** → **Track 2** EGR valve
Repair if necessary.

Ensure the presence of **+ 5 V** on **track 2** of the EGR valve.

If the fault is still present, run command **SC036 Reset programming** and select **EGR valve** to reset the EGR valve offsets.
(see **Replacement of components**).
If the valve is jammed or irrevocably seized, replace the EGR valve.

WARNING
A programming procedure is required when the EGR valve is replaced.
Reinitialise the first EGR valve offset and last EGR valve offset parameters.
Refer to the **Replacement of components** section to carry out this programming.

AFTER REPAIR	Deal with any faults. Carry out a road test followed by another check with the diagnostic tool.

GETtheMANUALS.org

DF226 PRESENT OR STORED	DAMPER VALVE CIRCUIT CC.1 : Short circuit to + 12 V. CC.0 : Short circuit to earth. CO : Open circuit. CC : Short circuit. 1.DEF : Internal electrical fault. 2.DEF : Unidentified electrical fault. 3.DEF : Value outside the limits.

NOTES	**Conditions for applying the fault finding procedure to a stored fault:** The fault is declared present after: – the engine is started – a road test – an actuator command **AC012 Damper valve** – switching off the ignition and waiting for the message to appear on the **diagnostic tool: "Loss of dialogue with the computer: EDC16 C3, check the tool connection and the computer supply"**.
	Special notes: If the fault is present: – it is difficult or even impossible to start the vehicle, – the engine stops noisily, – the **level 1** warning light is lit. Use bornier **Elé. 1681** for any operations on the injection computer connectors.
	IMPORTANT This fault can result in a rapid and significant fouling of the particle filter.

CC.1	***NOTES***	After any work on the damper valve, it is necessary to use **SC036 Reinitialise programming** and select **Damper valve**, then switch off the ignition and wait for the message to appear on the **diagnostic tool: "Loss of dialogue with the computer: EDC16 C3, check the tool connection and the computer supply"**.

Check the damper valve connections.
Check the injection computer connections.
Repair if necessary.

AFTER REPAIR	Deal with any faults. Carry out a road test followed by another check with the diagnostic tool.

GETtheMANUALS.org

DF226 **CONTINUED 1**	

Check **the continuity and insulation to + 12 V** on the following connections:

Earth ⟶ **Track 1** of the damper valve
Injection computer brown 48-track connector B, **track J4** ⟶ **Track 3** of the damper valve
Injection computer brown 48-track connector B, **track B2** ⟶ **Track 4** of the damper valve

Repair if necessary

If the fault is still present, replace the damper valve.

CO ***CC.0***	***NOTES***	After any work on the damper valve, use **SC036 Reinitialise programming** and select **Damper valve**, then switch off the ignition and wait for the message to appear on the **diagnostic tool: "Loss of dialogue with the computer: EDC16 C3, check the tool connection and the computer supply"**.

Check the damper valve connections.
Check the injection computer connections.
Repair if necessary.

Check the **continuity and insulation to earth** of the following connections:

Injection computer brown 48-track connector B, **track J4** ⟶ **Track 3** of the damper valve
Injection supply relay mounting, **Track 13** ⟶ **Track 2** of the damper valve
Injection computer brown 48-track connector B, **track B2** ⟶ **Track 4** of the damper valve

Repair if necessary.
If the fault is still present, replace the damper valve.

AFTER REPAIR	Deal with any faults. Carry out a road test followed by another check with the diagnostic tool.

GETtheMANUALS.org

DF226 **CONTINUED 2**	

CC	***NOTES***	After any work on the damper valve, use **SC036 Reinitialise programming** and select **Damper valve**, then switch off the ignition and wait for the message to appear on the **diagnostic tool: "Loss of dialogue with the computer: EDC16 C3, check the tool connection and the computer supply"**.

Check the damper valve connections.
Check the injection computer connections.
Repair if necessary.

Check for **continuity, insulation and the absence of interference resistance** on the following connections:

Earth → **Track 1** of the damper valve
Injection supply relay mounting, **Track 13** → **Track 2** of the damper valve
Injection computer brown 48-track connector B, **track J4** → **Track 3** of the damper valve
Injection computer brown 48-track connector B, **track B2** → **Track 4** of the damper valve

Repair if necessary.
If the fault is still present, replace the damper valve.

AFTER REPAIR	Deal with any faults. Carry out a road test followed by another check with the diagnostic tool.

GETtheMANUALS.org

DF226 **CONTINUED 3**	

1.DEF ***to 3.DEF***	***NOTES***	After any work on the damper valve, use **SC036 Reinitialise programming** and select **Damper valve**, then switch off the ignition and wait for the message to appear on the **diagnostic tool: "Loss of dialogue with the computer: EDC16 C3, check the tool connection and the computer supply"**.

Check the damper valve connections.
Check the injection computer connections.
Repair if necessary.

Check for **continuity, insulation and the absence of interference resistance** on the following connections:

Earth → **Track 1** of the damper valve
Injection supply relay mounting, **Track 13** → **Track 2** of the damper valve
Injection computer brown 48-track connector B, **track J4** → **Track 3** of the damper valve
Injection computer brown 48-track connector B, **track B2** → **Track 4** of the damper valve

Repair if necessary.

If the fault is still present, **check that the computer output is working correctly**.
Damper valve connected:
– connect the **negative** terminal of the voltmeter to **track 1** of the damper valve,
– connect the **positive** terminal of the voltmeter to **track 3** of the damper valve,
– use command **AC012 Damper valve** :
– The voltmeter should display **ten cycles** of two successive voltages: **~ 2.5 V** (OCR of **20%**) then **~ 8.75 V** (*OCR of **70%**).
If the voltmeter does not indicate any control while the command is running (ten 1-second cycles), contact the Techline.

*OCR: Opening Cyclic Ratio

AFTER REPAIR	Deal with any faults. Carry out a road test followed by another check with the diagnostic tool.

GETtheMANUALS.org

DF227 PRESENT OR STORED	SWIRL FLAP CC.0 : short circuit to earth CC.1 : short circuit to +12 V

NOTES	**Conditions for applying the fault finding procedure to stored faults:** The fault is declared present after the engine has been started.
	Special notes: Use bornier **Elé. 1681** for all operations on the computer connectors. This fault does not apply to VELSATIS PH2 Vdiag 14.

WARNING
The swirl flap is present but never controlled by the injection computer.
Never replace the swirl flap.

CC.1	***NOTES***	None.

Check the condition of the turbulence flap connector and repair if necessary.
Check **the continuity and insulation from + 12 V** of the following connection:
Swirl flap 2-track connector, **track 1** ⟶ Track **M1** brown connector **B** of the injection computer
Repair if necessary.

CC.0	***NOTES***	None.

Check the condition of the turbulence flap connector and repair if necessary.
Check **the continuity and insulation against earth** of the following connection:
Swirl flap 2-track connector, **track 2** ⟶ **+ after ignition feed** after relay
Repair if necessary.

AFTER REPAIR	Deal with any faults. Carry out a road test followed by another check with the diagnostic tool.

GETtheMANUALS.org

DF238 PRESENT OR STORED	THERMOPLUNGER No.3 RELAY CIRCUIT CO : open circuit CC.0 : short circuit to earth CC.1 : short circuit to +12 V 1.DEF : inconsistent signal

NOTES	**Conditions for applying the fault finding procedure to stored faults:** The fault is displayed as present following an engine start or following actuator command **AC031 Thermoplunger relay no. 3**.
	Special notes: Use bornier **Elé. 1681** for all operations on the computer connectors.

1.DEF ***CO***	***NOTES***	None.

Check for **+12 V after ignition feed** on relay mounting **R5 track 37**.
If there is no **+ 12 V** feed, refer to the fault interpretation **DF015 Main relay control circuit**.
Check the condition of the connectors of the thermoplunger **no. 3** relay (**R5**) and of the injection computer.
Repair if necessary.
Check the condition and the correct operation of the relay.**R5** Replace if defective.
Check for **continuity and the absence of interference resistance** on the following connection:
Injection computer connector **B track M3** ⟶ Relay mounting **R5 track 37**
Relay mounting **R5 track 35** ⟶ Relay mounting **R8 track 13**
Repair if necessary.

CC.0	***NOTES***	None.

Check the condition and the correct operation of the relay.**R5**
Replace if defective.
Check the **continuity, absence of interference resistance and the insulation** from earth of the following connection:
Relay mounting **R5 track 35** ⟶ Relay mounting **R8 track 13**
Repair if necessary.

AFTER REPAIR	Deal with any faults. Carry out a road test followed by another check with the diagnostic tool.

GETtheMANUALS.org

DF238 **CONTINUED**	

CC.1	***NOTES***	None.

Check the condition and the correct operation of the relay.**R5** Replace if defective.
Check the insulation from the + 12 V feed of the following connection:
Injection computer brown connector **B, track M3** ⟶ Relay mounting **R5 track 37**
Repair if necessary.

AFTER REPAIR	Deal with any faults. Carry out a road test followed by another check with the diagnostic tool.

GETtheMANUALS.org

DF239 PRESENT OR STORED	THERMOPLUNGER RELAY CIRCUIT N° 2 CO : open circuit CC.0 : short circuit to earth CC.1 : short circuit to +12 V 1.DEF : inconsistent signal

NOTES	**Conditions for applying the fault finding procedure to stored faults:** The fault is displayed as present after an engine start or actuator command **AC064 Thermoplunger no.2 relay**.
	Special notes: Use bornier **Elé. 1681** for all operations on the computer connectors.

1.DEF ***CO***	***NOTES***	None.

Check for **+12 V after ignition feed** on relay mounting **R11 track 3**.
If there is no **+ 12 V**, refer to the fault interpretation **DF125 Main relay control circuit**.
Check the condition of the connectors of thermoplunger **no. 2 relay (R11)** and of the injection computer.
Repair if necessary.
Check the condition and correct operation of relay **R11**. Replace if defective.
Check for **continuity and the absence of interference resistance** on the following connection:
Injection computer **grey connector C track A1** ⟶ Relay mounting **R11 track 2**
Relay mounting **R11 track 3** ⟶ Relay mounting **R8 track 13**
Repair if necessary.

CC.0	***NOTES***	None.

Check the condition and the correct operation of relay **R1.**
Check **insulation** against earth of the following connection:
Relay mounting **R11 track 3** ⟶ Relay mounting **R8 (injection computer supply relay) track 13**
Repair if necessary.

AFTER REPAIR	Deal with any faults. Carry out a road test followed by another check with the diagnostic tool.

GETtheMANUALS.org

DF239 **CONTINUED**	

CC.1	***NOTES***	None.

Check the condition and correct operation of relay **R11**. Replace if defective.
Check the insulation from the + 12 V feed of the following connection:
Injection computer **grey connector C, track A1** ⟶ Relay mounting **R11 track 2**
Repair if necessary.

AFTER REPAIR	Deal with any faults. Carry out a road test followed by another check with the diagnostic tool.

GETtheMANUALS.org

DF240 PRESENT OR STORED	THERMOPLUNGER N° 1 RELAY CIRCUIT CO : open circuit CC.0 : short circuit to earth CC.1 : short circuit to +12 V 1.DEF : inconsistent signal

NOTES	**Conditions for applying the fault finding procedure to stored faults:** The fault is displayed as present after an engine start or actuator command **AC063 Thermoplunger no. 1 relay**.
	Special notes: Use bornier **Elé. 1681** for all operations on the computer connectors.

1.DEF ***CO***	***NOTES***	None.

Check for **+ 12 V** after ignition feed on relay mounting **R1 track 63**.
If there is no **+ 12 V** feed, refer to the fault interpretation **DF015 Main relay control circuit**.
Check the condition of the connectors of the thermoplunger **no. 1** relay **(R1)** and of the injection computer.
Repair if necessary.
Check the condition and the correct operation of relay **R1.** Replace if necessary.
Check for **continuity and the absence of interference resistance** on the following connection:
Injection computer **brown connector B track K4** ⟶ Relay mounting **R1 track 63**
Relay mounting **R1 track 65** ⟶ Relay mounting **R8 track 13**
Repair if necessary.

CC.0	***NOTES***	None.

Check the condition and the correct operation of relay **R1.**
Replace if defective.
Check **insulation** against earth of the following connection:
Relay mounting **R1 track 65** ⟶ Relay mounting **R8 (injection computer supply relay) track 13**
Repair if necessary.

AFTER REPAIR	Deal with any faults. Carry out a road test followed by another check with the diagnostic tool.

GETtheMANUALS.org

DF240 **CONTINUED**	

CC.1	***NOTES***	None.

Check the condition and the correct operation of relay **R1.** Replace if defective.
Check the insulation from the + 12 V feed of the following connection:
Injection computer **brown connector B track K4** ⟶ Relay mounting **R1 track 63**
Repair if necessary.

AFTER REPAIR	Deal with any faults. Carry out a road test followed by another check with the diagnostic tool.

GETtheMANUALS.org

DF250 PRESENT OR STORED	ELECTRONIC STABILITY PROGRAM FUNCTION 1.DEF : CAN connection fault 2.DEF : inconsistent signal

NOTES	**Conditions for applying the fault finding procedure to stored faults:** The fault is declared present after a road test.

1.DEF ***2.DEF***	***NOTES***	None.

Carry out fault finding on the ABS computer.
Carry out a multiplex network test and a fault finding procedure on any faults.
If the fault is still present, contact the Techline.

AFTER REPAIR	Deal with any faults. Carry out a road test followed by another check with the diagnostic tool.

GETtheMANUALS.org

DF272 PRESENT OR STORED	EGR VALVE CONTROL CIRCUIT 1.DEF : blocked valve open 2.DEF : blocked valve closed

NOTES	**Conditions for applying the fault finding procedure to a stored fault:** The fault is declared present after a road test.
	Special notes: The EGR function is deactivated if several faults with **DF226 Damper valve circuit** are present. If **1.DEF** is present, – the **level 1** warning light is lit, – the vehicle performance is reduced Use bornier **Elé. 1681 or Elé. 1590** for all operations on the injection computer connectors.

1.DEF ***2.DEF***	***NOTES***	None.

Check the EGR valve connections. Check the injection computer connections. Repair if necessary.
Check the continuity and the absence of interference resistance on the following connections: Injection computer brown 48-track connector **B**, **track C2** ⟶ **Track 1** EGR valve connector Injection computer brown 48-track connector **B**, **track D2** ⟶ **Track 5** EGR valve connector
Measure the **resistance** of the EGR valve motor between **tracks 1** and **5**. If the resistance displayed is not between 1 and 400 Ω, replace the EGR valve.
When replacing the EGR valve, run command **SC036 Reinitialise programming** to initialise the EGR valve offsets
Check that there are no leaks on the EGR circuit (pipes pierced or damaged) and that the clamps are properly tightened.

GETtheMANUALS.org

DF272 CONTINUED	

If the fault is still present, run command **SC036 Reset programming** and select **EGR valve** to reset the EGR valve offsets.
(see **Replacement of components**).
If the valve is jammed or irrevocably seized, replace the EGR valve.

WARNING
A programming procedure is required when the EGR valve is replaced.
Reinitialise the **first EGR valve offset** and **last EGR valve offset** parameters.
Refer to the **Replacement of components** section to carry out this programming.

GETtheMANUALS.org

DF276 PRESENT OR STORED	INJECTOR CODE PROGRAMMING 1.DEF : internal electronic fault during programming 2.DEF : no code stored

NOTES	**Conditions for applying the fault finding procedure to a stored fault:** The fault is declared present after: – replacing injector(s), – replacing and programming the injection computer.
	Special notes: If the fault is present: – the engine speed is limited, – the level 1 warning light is lit.

1.DEF	***NOTES***	**None.**

Program the injector codes using command **SC002 Enter injector codes**. Carry out the procedure described in the **Interpretation of commands** section.
If the fault is still **present** after switching off the ignition and waiting for the message to appear on the **diagnostic tool: "Loss of dialogue with the computer: EDC16 C3, check the tool connection and the computer supply"**, then re-establishing dialogue.
Follow the interpretation of command **SC002 Entering injector codes**. If the fault is still present, contact the techline. Otherwise clear the fault memory using **RZ007 Fault memory**.

2.DEF	***NOTES***	This fault appears on any blank computer (new or recently reprogrammed).

WARNING
A computer without the IMA option can be replaced by a computer with this option. The codes have therefore not been saved during command SC003 Save computer data. In this case, status ET104 Injector code operation becomes YES, fault DF276 Program injector codes will be present, and the engine operates in defect mode.
Program the injector codes using command **SC002 Enter injector codes**.
Carry out the procedure described in the **Interpretation of commands** section.
If the fault is still **present** after the ignition is switched off and after waiting for the **diagnostic tool message "No dialogue with the computer: EDC16 C3, check the tool connection and the computer supply"**, then a dialogue is established again,
Follow the interpretation of command **SC002 Entering injector codes**.
If the fault is still present, contact the techline.
Otherwise clear the fault memory using **RZ007 Fault memory**.

AFTER REPAIR	Deal with any faults. Carry out a road test followed by another check with the diagnostic tool.

GETtheMANUALS.org

DF304 PRESENT OR STORED	EGR BY-PASS CIRCUIT CO : open circuit CC.0 : short circuit to earth CC.1 : short circuit to +12 V 1.DEF : signal outside lower limit

NOTES	**Conditions for applying the fault finding procedure to a stored fault:** The fault is declared present after the engine has been started.
	Special notes: If the fault is present: – the exhaust fumes sent to the inlet are no longer cooled, – no customer complaint.

CO ***1.DEF***	***NOTES***	None.

Check the connectors of the EGR by-pass solenoid valve, and of the injection computer.
Repair if necessary.
Check the **continuity and the absence of interference resistance** of the following connections:
Injection computer brown 48-track connector **B**, **track L3** ⟶ **Track 1** by-pass solenoid valve connector
EGR by-pass solenoid valve connector **track 2** ⟶ Relay mounting R8 **track 13**
Repair if necessary.

CC.0	***NOTES***	None.

Check the **continuity, absence of interference resistance and the insulation** from earth of the following connection:
By-pass solenoid valve connector **track 2** ⟶ Relay mounting R8 **track 13**
Repair if necessary.

CC.1	***NOTES***	None.

Check the **continuity, absence of interference resistance and insulation** from + 12 V for the following connection:
Injection computer brown 48-track connector **B**, **track L3** ⟶ **Track 1** by-pass solenoid valve connector
Repair if necessary.

AFTER REPAIR	Deal with any faults. Carry out a road test followed by another check with the diagnostic tool.

GETtheMANUALS.org

DF308 PRESENT OR STORED	CLOGGED PARTICLE FILTER

NOTES	**Conditions for applying the fault finding procedure to a stored fault:** The fault is declared present after the engine is started or following a road test.
	Special notes: If the fault is present: – particle filter regeneration is inhibited, – the EGR function is inhibited, – the vehicle performance is reduced, – the **level 1** warning light is lit and a warning message (or light) is displayed on the instrument panel.
	Priorities when dealing with a number of faults : Firstly, deal with the following faults: – **DF315 Particle filter differential pressure sensor** if it is present. – **DF308** if **DF315** is stored. – **DF717 Particle filter upstream pressure** if it is present or stored. – **DF226 Damper valve circuit** if it is present or stored. – **DF272 EGR valve control circuit** if it is present or stored. – **DF309 Particle filter downstream temperature sensor** if it is present or stored. – **DF310 Particle filter upstream temperature sensor** if it is present or stored.

The fault appears if the weight of soot contained in the particle filter exceeds 45 g for Vdiag 08 and 10, or 48 g for Vdiag 14.
Check the air circuit. Run **test 3 Turbocharged air circuit check.**
Check that there are no leaks or blockages in the exhaust pipe.
Repair if necessary.
Carry out an After-Sales regeneration. Run command **SC017 Particle filter regeneration** (see **Interpretation of commands**).
Clear fault DF308 Present or Stored.
If the fault is still present, contact the Techline.

AFTER REPAIR	Deal with any faults. Carry out a road test followed by another check with the diagnostic tool.

GETtheMANUALS.org

DF309 PRESENT OR STORED	PARTICLE FILTER DOWNSTREAM TEMPERATURE SENSOR CC.0 : Short circuit to earth CO.1 : Short circuit or open circuit to + 12 V 1.DEF : Signal outside upper limit

NOTES	**Conditions for applying the fault finding procedure to a stored fault:** The fault becomes present if: – ignition is on (**CC.0**), – following a road test, engine warm (**CO.1**).
	IMPORTANT **The particle filter downstream temperature sensor only measures temperatures greater than 50°C.** **This fault does not apply to VELSATIS phase 2 Vdiag 14.**

Check the condition of the particle filter downstream temperature sensor connector.
Check the condition of the injection computer connector.
If any connectors are faulty and there is a repair procedure (**see Technical Note 6015A, Repairing electrical wiring, Wiring: Precautions for repair**), repair the connector, otherwise replace the wiring.

Check the **continuity** and **insulation** from **+12 V** and from **earth** on the following connections:

Injection computer connector **B** brown 48-track, **track K3**	→	**track 2** particle filter downstream temperature sensor connector
injection computer grey connector **C**, **track E3**	→	**track 1** particle filter downstream temperature sensor connector

If any of the connections are faulty and there is a repair method (**see Technical Note 6015A, Electrical wiring repair, Wiring: precautions for repairs**), repair the wiring; otherwise replace the wiring.

If the fault is still present, replace the particle filter downstream temperature sensor.

AFTER REPAIR	Deal with any faults. Carry out a road test followed by another check with the diagnostic tool.

GETtheMANUALS.org

DF310 PRESENT OR STORED	PARTICLE FILTER UPSTREAM TEMPERATURE SENSOR CC.0 : Short circuit to earth CO.1 : Short circuit or open circuit to + 12 V 1.DEF : Signal outside upper limit

NOTES	**Conditions for applying the fault finding procedure to a stored fault:** The fault becomes present if: – ignition is on (**CC.0**), – following a road test, engine warm (**CO.1**).
	Special notes: If the fault is present: – particle filter regeneration is inhibited, – the **level 1** warning light is lit, – the **OBD** warning light will illuminate after three consecutive driving cycles (**starting + 5 seconds + switch off the ignition and wait** for the message to appear on the **diagnostic tool: "Loss of dialogue with the computer: EDC16 C3, check the tool connection and the computer supply"**).
	IMPORTANT: The particle filter upstream temperature sensor only measures temperatures greater than 50°C.

Check the condition of the particle filter upstream temperature sensor connector.
Check the condition of the engine management computer connector.
If one of the connectors is faulty and there is a repair procedure (**see Technical Note 6015A, Electrical wiring repair, Wiring: precautions for repair**), repair the connector, otherwise replace the wiring.

Check the **continuity** and **insulation** from **+12 V** and from **earth** on the following connections:

Injection computer, brown 48-track connector **B**, **track H3**	→	**track 2** particle filter upstream temperature sensor connector
Injection computer brown 48-track connector **B**, **track A1**	→	**track 1** particle filter upstream temperature sensor connector

If any of the connections are faulty and there is a repair method (**see Technical Note 6015A, Electrical wiring repair, Wiring: precautions for repairs**), repair the wiring; otherwise replace the wiring.

If the fault is still present, replace the particle filter upstream temperature sensor.

AFTER REPAIR	Deal with any faults. Carry out a road test followed by another check with the diagnostic tool.

GETtheMANUALS.org

DF311 PRESENT OR STORED	FAILED REGENERATIONS LIMIT EXCEEDED

NOTES	**Conditions for applying the fault finding procedure to a stored fault:** The fault is declared present after the engine is started or following a road test.
	Special notes: If the fault is present: – particle filter regenerations when driving are inhibited, – the **level 1** warning light is lit.
	Priorities when dealing with a number of faults: Firstly, deal with the following faults: – **DF308 Particle filter clogged** if it is present or stored. – **DF315 Particle filter differential pressure sensor** if it is present or stored. – **DF717 Particle filter upstream pressure** if it is present or stored. – **DF055 Turbocharging pressure regulation circuit** if it is present or stored. – **DF309 Particle filter downstream temperature sensor** if it is present or stored. – **DF310 Particle filter upstream temperature sensor** if it is present or stored. – **DF272 EGR valve control circuit** if it is present or stored.

The fault appears after 11 failed attempts at regeneration while driving.
Check the air circuit. Run **test 3 Turbocharged air circuit check**.
Check that there are no leaks or blockages in the exhaust pipe.
Repair if necessary.
– Carry out an After-Sales regeneration.
– Follow the procedure for command **SC017 Particle filter regeneration** (see **Interpretation of commands**).
If the fault is still present, contact the Techline.

AFTER REPAIR	Deal with any faults. Carry out a road test followed by another check with the diagnostic tool.

GETtheMANUALS.org

DF312 PRESENT OR STORED	SPEED REQUEST

NOTES	**Conditions for applying the fault finding procedure to a stored fault:** The fault is declared present after the engine is started or following a road test.
	Special notes: If the fault is present, – the special **Regenerate particle filter** warning light is illuminated, or a warning message is displayed on the instrument panel. – The vehicle needs to be driven specially to activate particle filter regeneration during driving.
	Priorities when dealing with a number of faults: Firstly, deal with the following faults: – **DF308 Particle filter clogged** if it is present or stored, – **DF311 Failed regenerations limit exceeded** if it is present. – **DF315 Particle filter diff*. pressure sensor** if it is present or stored, – **DF717 Particle filter upstream pressure** if it is present or stored.

The fault appears:
– after 8 failed regeneration attempts when driving or if the weight of soot contained in the particle filter is above 42g for Vdiag 14 and 40 g for Vdiag 08 and 10.)
– if the weight of soot contained in the particle filter is above 42 g for Vdiag 14 and 40 g for Vdiag 08 and 10.

PART A

The flow chart on the following page allows analysis of the driving profile and the causes for this fault being activated

AFTER REPAIR	Deal with any faults. Carry out a road test followed by another check with the diagnostic tool.

GETtheMANUALS.org

DF312 CONTINUED 1

Repair request with **DF312 Speed request** present or stored ONLY

Read the information in the **Particle filter history sub-function: PR784 to PR793 DF312 record No. 1 to No. 10**

PR784 to PR793 are all equal to 0 miles (0 km)?

yes

no

Among these parameters (PR784 to PR793):
– Find the parameter with the highest mileage: it is the **Mileage of the last DF312**.
– Note the parameter index on the order of repair with the relevant mileage value.
E.g.: PR787 = 2794 miles (4657 Km)

Read the information in the **Particle filter history** sub-function: **PR794** to **PR803 Regeneration failure records no. 1 to no. 10**

Is at least one PR794 to PR803 = 19,660 miles (32,766 km)?

yes

no

Identify the mileages from the values of **parameters PR794** to **PR803 Stored regeneration failures No. 1 to No. 10** that are between the **Mileage of the last DF312** and the **Mileage of the last DF312** - 120 miles (200 km). These are the **mileages of the last failures**.
Example: 2674 miles (4457 km) < PR801 = 2760 miles (4600 km) < 2794 miles (4657 km)

A

B

AFTER REPAIR	Deal with any faults. Carry out a road test followed by another check with the diagnostic tool.

GETtheMANUALS.org

DF312
CONTINUED 2

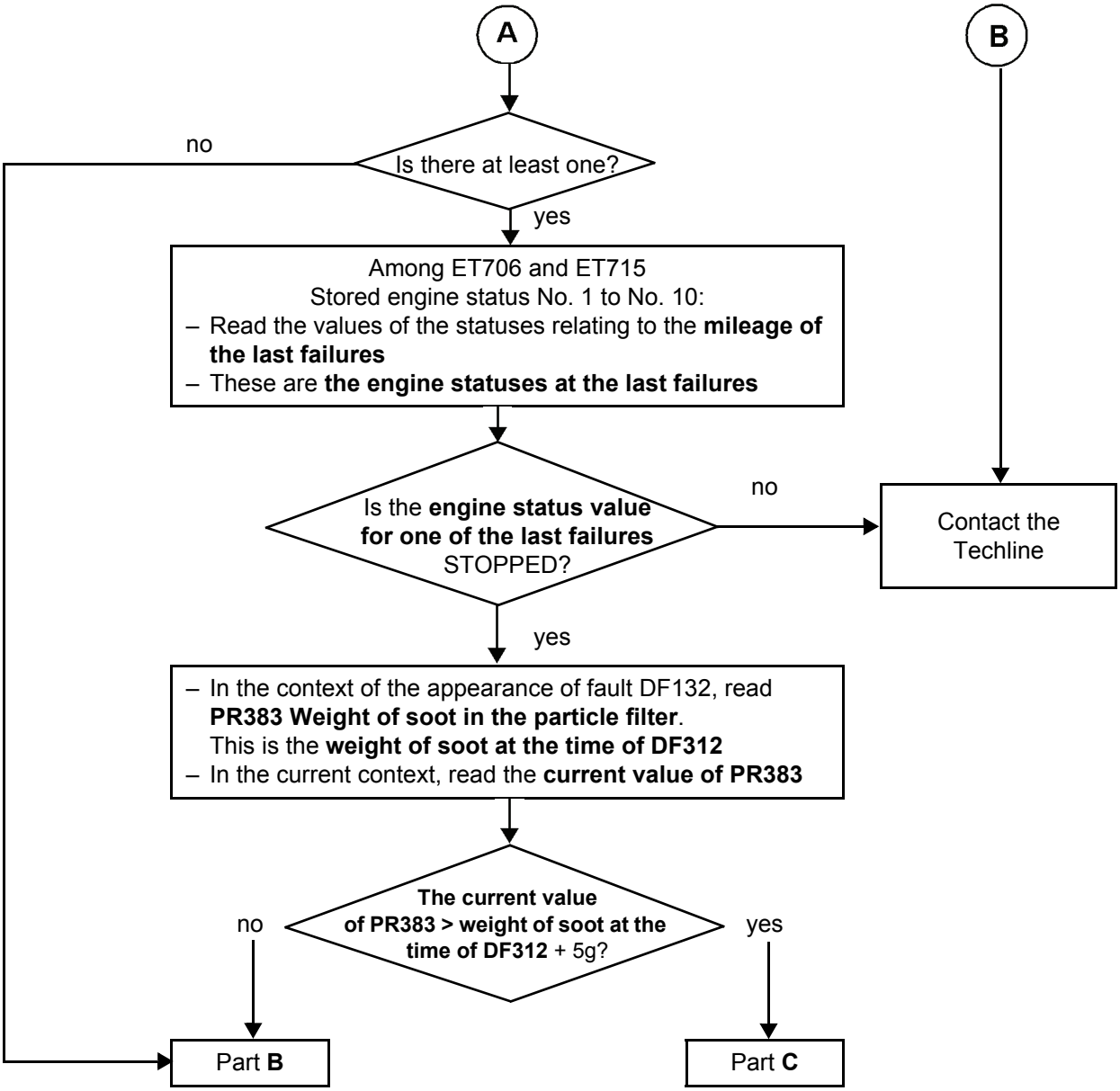

AFTER REPAIR	Deal with any faults. Carry out a road test followed by another check with the diagnostic tool.

GETtheMANUALS.org

DF312 CONTINUED 3	

PART B

1 - **No particle filter regeneration.**

2 - Write on the order of repair the parameter and status relating to the last failure:

– Mileage of the last DF312.

– Mileage of the last failures.

– Engine statuses of the last failures.

E.g.: PR787 = 2794 miles (4657 km); PR801 = 2760 miles (4600 km); engine status = STOPPED

3 - **Interpretation of the values written on the repair order by the service advisor for the customer:**

Before the last occurrence **of the Particle Filter warning light or message** (which appeared at the **Mileage of the last DF312**), the customer had not adhered to the driving recommendations: the failure that occurred at the **Mileage of the last failure** is due to the engine being switched off.

4 - Explain to the customer the procedure to turn off the warning light, referring to the parameters written in the repair order: see **PART D**.

PART C

Check the air circuit. Run **test 3 Turbocharged air circuit check.**

1 - Carry out a regeneration in the Renault dealership with the **approval of the Techline**.

2 - Change the oil and replace the oil filter if a message on the diagnostic tool requests it.

3- Run command **SC036 Reinitialise programming** and select **After particle filter regeneration**.

4 - Explain to the customer the procedure for regeneration while driving to avoid unnecessary repairs: see **PART D**.

.

AFTER REPAIR	Deal with any faults. Carry out a road test followed by another check with the diagnostic tool.

GETtheMANUALS.org

DF312 CONTINUED 4	

PART D
Procedure to switch off the Particle filter message or warning light on the instrument panel.

Certain types of driving can result in the Particle filter message or warning light from being switched on and the fault **DF312 Speed request** to appear.
The fault appears:
- **after 8 failed regeneration attempts when driving or if the weight of soot contained in the particle filter is above 42g for Vdiag 14 and 40 g for Vdiag 08 and 10.)**
- **if the weight of soot contained in the particle filter is above 42 g for Vdiag 14 and 40 g for Vdiag 08 and 10.**

The customer must carry out a specific driving operation (cf. vehicle user manual) that consists of:
1. When the engine is warm, drive at a speed greater than **48 mph (80 km/h)** for **2 minutes** to trigger the regeneration procedure.
2. Continue to drive at an average speed of **48 mph (80 km/h)** until the Particle filter warning light or message on the instrument panel goes out. In order for the procedure to succeed, it is necessary to drive without stopping, without stopping the engine or to leave the engine running at idle speed for an extended period of time. The regeneration time depends on the vehicle and the driving conditions but should last for **20 minutes maximum**.
3. If regeneration fails when driving (the warning light does not go out or the SERVICE warning light comes on), check the air circuit. Run **test 3 Turbocharged air circuit check.** Check that there are no leaks or blockages in the exhaust pipe. Repair if necessary. Carry out particle filter regeneration within the Renault network. Run command **SC017 Particle filter regeneration** (see **Interpretation of commands**).

If the fault is still present, contact the Techline.
.

AFTER REPAIR	Deal with any faults. Carry out a road test followed by another check with the diagnostic tool.

GETtheMANUALS.org

DF315 PRESENT OR STORED	PARTICLE FILTER DIFFERENTIAL PRESSURE SENSOR CO : Open circuit CO.0 : Open circuit or short circuit to earth CC.1 : Short circuit to + 12 V 1.DEF : Inconsistency of the signal 2.DEF : Signal outside lower limit

NOTES	**Conditions for applying the fault finding procedure to a stored fault:** The fault is declared present after the engine is started or following a road test.
	Special notes: **If the fault is present:** – the **level 1** warning light is lit, – the **OBD** warning light will illuminate after three consecutive driving cycles (starting + 5 seconds + switch off the ignition and wait for the message to appear on the **diagnostic tool: "Loss of dialogue with the computer: EDC16 C3, check the tool connection and the computer supply"**), – the particle filter fault finding procedure is inhibited, – particle filter regeneration is inhibited.
	Priorities when dealing with a number of faults : **DF315 if it is present.** **DF308 Particle filter clogged if DF315 is stored and DF308 is present.** **DF011 Sensor feed voltage no. 1** if it is present or stored.

CC.1	***NOTES***	**None.**

Check the condition of the connectors on the differential pressure sensor and the injection computer.
If one of the connectors is faulty and there is a repair procedure (**see Technical Note 6015A, Electrical wiring repair, Wiring: precautions for repair**), repair the connector, otherwise replace the wiring.

Check the **insulation** of the following connections:

Injection computer connector **C track F3** → **track 2** particle filter differential pressure sensor connector

Injection computer connector **C track B2** → **track 3** particle filter differential pressure sensor connector

If any of the connections are faulty and there is a repair method (**see Technical Note 6015A, Electrical wiring repair, Wiring: precautions for repairs**), repair the wiring; otherwise replace the wiring.
If the fault is still present, replace the differential pressure sensor.

AFTER REPAIR	Deal with any faults. Carry out a road test followed by another check with the diagnostic tool.

GETtheMANUALS.org

DF315 **CONTINUED**	

CO.0 ***CO***	***NOTES***	**None**

Check the condition of the connectors on the differential pressure sensor and the injection computer.
If one of the connectors is faulty and there is a repair procedure (**see Technical Note 6015A, Electrical wiring repair, Wiring: precautions for repair**), repair the connector, otherwise replace the wiring.

Check the **continuity and insulation** from **earth** of the following connections:

Injection computer connector **C track F3** → **track 2** particle filter differential pressure sensor connector

Injection computer connector **B track B2** → **track 3** particle filter differential pressure sensor connector

If the connection or connections are faulty and there is a repair procedure (see **Technical Note 6015A, Electrical wiring repair, Wiring: Precautions for repair**), repair the wiring, otherwise replace it.

If the fault is still present, replace the differential pressure sensor.

1.DEF ***2.DEF***	***NOTES***	**None**

Check the condition of the pressure pipes on the differential pressure sensor.
Check that they are sealed and in the correct position.
Replace if necessary.

Check the **continuity and absence of interference resistance** of the following connections:

Injection computer connector **C track F3** → **track 2** particle filter differential pressure sensor connector

Injection computer connector **B track B2** → **track 3** particle filter differential pressure sensor connector

If the connection or connections are faulty and there is a repair procedure (see **Technical Note 6015A, Electrical wiring repair, Wiring: Precautions for repair**), repair the wiring, otherwise replace it.

If the fault is still present, replace the differential pressure sensor.

AFTER REPAIR	Deal with any faults. Carry out a road test followed by another check with the diagnostic tool.

GETtheMANUALS.org

DF619 PRESENT OR STORED	EGR VALVE JAMMED OPEN

NOTES	**Priorities when dealing with a number of faults:** **Deal with the following faults if they are present or stored:** **DF114 EGR solenoid valve circuit** **DF118 EGR solenoid valve servo-control** **DF209 EGR position sensor circuit** **DF272 EGR control circuit**
	Conditions for applying fault finding procedures to stored faults: The fault is declared present after: – A road test.
	Special notes: The EGR and turbocharging functions are inhibited. The **level 1** warning light is illuminated. Use bornier **Elé. 1681** for all operation at the level of the injection computer connectors.
	IMPORTANT This fault can result in a rapid and significant fouling of the particle filter. If the EGR valve needs to be replaced to resolve the fault, all faults must then be cleared.

Check the EGR valve connections.
Check the injection computer connections.
If the connector is faulty and there is a repair method (see **Technical Note 6015A, Repairing electrical wiring, Wiring: Precautions for repair**), repair the connector, otherwise replace the wiring.

AFTER REPAIR	Deal with any faults. Carry out a road test followed by another check with the diagnostic tool.

GETtheMANUALS.org

DF619 CONTINUED	

Check the continuity and insulation of the following connections:
- **3GC** between components **1460** and **120**,
- **3EL** between components **1460** and **120**,
- **3JM** between components **1460** and **120**.

Check the continuity and the insulation of each connection of the adapter attachment, if fitted to the vehicle.

If the connection or connections are faulty and there is a repair procedure (see **Technical Note 6015A, Electrical wiring repair, Wiring: Precautions for repair**), repair the wiring, otherwise replace it.

If the fault is still present, replace the EGR valve.
When replacing the EGR valve, run command **SC036 Reinitialise programming** and select **EGR valve** to reinitialise the EGR valve offsets. (see **Replacement of components**).

If the fault is still present, contact the Techline.

AFTER REPAIR	Deal with any faults. Carry out a road test followed by another check with the diagnostic tool.

GETtheMANUALS.org

DF620 PRESENT OR STORED	EGR VALVE FOULED

NOTES	**Priorities when dealing with a number of faults:** **Deal with the following faults if they are present or stored:** **DF114 EGR solenoid valve circuit** **DF118 EGR solenoid valve servo-control** **DF209 EGR position sensor circuit** **DF272 EGR control circuit**
	Conditions for applying fault finding procedures to stored faults: The fault is declared present after: – A road test.
	Special notes: The EGR and turbocharging functions are inhibited. The **level 1** warning light is illuminated. Use bornier **Elé. 1681** for all operation at the level of the injection computer connectors.
	IMPORTANT This fault can result in a rapid and significant fouling of the particle filter. If the EGR valve needs to be replaced to resolve the fault, all faults must then be cleared.

Check the EGR valve connections.
Check the injection computer connections.
If the connector is faulty and there is a repair method (see **Technical Note 6015A, Repairing electrical wiring, Wiring: Precautions for repair**), repair the connector, otherwise replace the wiring.

AFTER REPAIR	Deal with any faults. Carry out a road test followed by another check with the diagnostic tool.

GETtheMANUALS.org

DF620 CONTINUED	

Check the continuity and the insulation of the following connections:
- **3GC** between components **1460** and **120**,
- **3EL** between components **1460** and **120**,
- **3JM** between components **1460** and **120**.

Check the continuity and the insulation of each connection of the adapter attachment, if fitted to the vehicle.

If the connection or connections are faulty and there is a repair procedure (see **Technical Note 6015A, Electrical wiring repair, Wiring: Precautions for repair**), repair the wiring, otherwise replace it.

If the fault is still present, replace the EGR valve.
When replacing the EGR valve, run command **SC036 Reinitialise programming** and select **EGR valve** to reinitialise the EGR valve offsets. (see **Replacement of components**).

If the fault is still present, contact the Techline.

GETtheMANUALS.org

DF621 PRESENT OR STORED	EGR VALVE JAMMED OPEN (OBD FAULT)

NOTES	**Priorities when dealing with a number of faults:** **Deal with the following faults if they are present or stored:** **DF114 EGR solenoid valve circuit** **DF118 EGR solenoid valve servo-control** **DF209 EGR position sensor circuit** **DF272 EGR control circuit**
	Conditions for applying fault finding procedures to stored faults: The fault is declared present after: – A road test.
	Special notes: The EGR and turbocharging functions are inhibited. The **OBD** warning light illuminates after three complete driving cycles (starting + **5 seconds** + switch off the ignition and wait for the message to appear on the **diagnostic tool**: **"Loss of dialogue with the computer: EDC16 C3, check the tool connection and the computer supply"**). Use bornier **Elé. 1681** for all operation at the level of the injection computer connectors.
	IMPORTANT This fault can result in a rapid and significant fouling of the particle filter. If the EGR valve needs to be replaced to resolve the fault, all faults must then be cleared.

Check the EGR valve connections.
Check the injection computer connections.
If the connector is faulty and there is a repair method (see **Technical Note 6015A, Repairing electrical wiring, Wiring: Precautions for repair**), repair the connector, otherwise replace the wiring.

AFTER REPAIR	Deal with any faults. Carry out a road test followed by another check with the diagnostic tool.

GETtheMANUALS.org

DF621 CONTINUED	

Check the continuity and insulation of the following connections:
- **3GC** between components **1460** and **120**,
- **3EL** between components **1460** and **120**,
- **3JM** between components **1460** and **120**.

Check the continuity and the insulation of each connection of the adapter attachment, if fitted to the vehicle.

If the connection or connections are faulty and there is a repair procedure (see **Technical Note 6015A, Electrical wiring repair, Wiring: Precautions for repair**), repair the wiring, otherwise replace it.

If the fault is still present, replace the EGR valve.
When replacing the EGR valve, run command **SC036 Reinitialise programming** and select **EGR valve** to reinitialise the EGR valve offsets. (see **Replacement of components**).

If the fault is still present, contact the Techline.

AFTER REPAIR	Deal with any faults. Carry out a road test followed by another check with the diagnostic tool.

GETtheMANUALS.org

DF717 PRESENT OR STORED	PARTICLE FILTER UPSTREAM PRESSURE 1.DEF : Inconsistent signal

NOTES	**Conditions for applying fault finding procedures to stored faults:** The fault is declared present after the engine is started or following a road test.
	Special notes: **If the fault is present:** – the **level 1** warning light is lit, – the **OBD** warning light will illuminate after three consecutive driving cycles (starting + 5 seconds + switch off the ignition and wait for the message to appear on the **diagnostic tool: "Loss of dialogue with the computer: EDC16 C3, check the tool connection and the computer supply"**), – the particle filter fault finding procedure is inhibited, – particle filter regeneration is inhibited,

Check the condition of the pressure pipe between the particle filter upstream take-off point and the differential pressure sensor.

Check that the pipe is not crushed, blocked or pierced.

Check that the differential pressure sensor is correctly positioned and connected **(see MR395 or 402, Mechanical, 19B, Exhaust, Particle filter pressure sensor: Removal - Refitting)**.

Replace the pressure pipe if necessary.

AFTER REPAIR	Deal with any faults. Carry out a road test followed by another check with the diagnostic tool.

GETtheMANUALS.org

DF953 PRESENT OR STORED	PARTICLE FILTER ABSENT 1.DEF : Faulty 2.DEF : Signal outside lower limit

NOTES	**Conditions for applying the fault finding procedure to stored faults:** The fault is declared present after the engine is started or following a road test.
	Special notes: If the fault is present: – particle filter regeneration is inhibited, – blue/white smoke and black particles coming from the exhaust. – the **OBD** warning light illuminates after three consecutive driving cycles (start the engine **+ 5 seconds**, then switch off the ignition and wait for **40 seconds**).
	Priorities when dealing with a number of faults: Firstly, deal with the following faults: – **DF315 Particle filter differential pressure sensor** if it is present or stored, – **DF717 Particle filter upstream pressure** if present or stored
	IMPORTANT In the long term, this fault may lead to premature wear and a greater risk of turbocharger failure.

Check the condition of the connectors on the differential pressure sensor and the injection computer.
If one of the connectors is faulty and there is a repair procedure (**see Technical Note 6015A, Electrical wiring repair, Wiring: precautions for repair**), repair the connector, otherwise replace the wiring.

Check the particle filter is present.
If it is present,
Visually inspect the particle filter by placing the vehicle on a lift:
– not damaged (no abnormal welds, if necessary compare it with another vehicle fitted with particle filter),
– if it has After-Sales sleeves, as a result of a previous operation, check that the particle filter's contents have not been emptied when being removed.

If the particle filter is not working correctly or is absent:
– replace it.
– run command **SC036 Reinitialise programming** and select **After particle filter replacement** (see **Interpretation of commands**).

If the fault is still present, contact the Techline.

AFTER REPAIR	Deal with any faults. Carry out a road test followed by another check with the diagnostic tool.

GETtheMANUALS.org

NOTES	Only carry out this conformity check after a full check with the diagnostic tool. The values shown in this conformity check are given as a guide. Test conditions: **ENGINE OFF, IGNITION ON**.

MAIN COMPUTER STATUSES AND PARAMETERS

Order	Function	Parameter, Status Check or Action		Display and Notes	Fault finding
1	Vehicle impact	**ET077:**	Impact detected	**NO**	In the event of a fault, refer to the interpretation of fault **DF069 Impact detected signal**.
2	Power supply	**ET001:**	Computer + after ignition feed	**PRESENT**	In the event of a fault, refer to the interpretation of **DF015 Main relay control circuit**.
		PR071:	Computer supply voltage	**9 V < X < 16 V**	In the event of a fault, carry out a fault finding procedure on the charging circuit and refer to the interpretation for **DF047 Computer supply voltage**.
		PR358:	Sensor reference voltage	**3.4 V < X < 3.8 V**	None
3	Speed	**PR190:**	Idle speed setpoint	Indicates the engine's rotational speed setpoint in rpm	In the event of a fault, refer to the interpretation for fault **DF005 Engine speed sensor circuit**.
		PR055:	Engine speed	Indicates the engine's speed of rotation in rpm. **Ignition on: 0 rpm**	
4	Speed signal	**PR089:**	Vehicle speed	Indicates the vehicle speed in mph (km/h).This parameter is transmitted via the ABS computer. This signal is transmitted to the injection system on the multiplex network.	In the event of a fault test the multiplex network. See **38C** ABS note.

GETtheMANUALS.org

NOTES	Only carry out this conformity check after a full check with the diagnostic tool. The values shown in this conformity check are given as a guide. Test conditions: **ENGINE OFF, IGNITION ON**.

MAIN COMPUTER STATUSES AND PARAMETERS (continued)

Order	Function	Parameter, Status Check or Action	Display and Notes	Fault finding
5	Injection configuration	**ET104:** Injector code use	**YES**	This status indicates that the IMA function is activated. In the event of a fault, consult the interpretation of **DF276 Injector code programming**.
6	Pressure	**PR035:** Atmospheric pressure	Indicates the atmospheric pressure in mbar. The sensor is built into the computer. **Default value: 750 mbar.**	In the event of a fault, consult the interpretation of **DF003 Atmospheric pressure sensor circuit**.
		PR038: Rail pressure	**0 < X < 30 bar**	In the event of a fault, consult the interpretation of fault **DF007 Rail pressure sensor circuit**.
7	Temperature	**PR058:** Air temperature	Shows the inlet air temperature **Default value: 20°C**	In the event of a fault, refer to the interpretation for **DF039 Inlet air temperature circuit sensor**.
		PR064: Coolant temperature	Shows the engine coolant temperature in °C **Default value: 119°C.**	In the event of a fault, refer to the interpretation of **DF001 Coolant temperature sensor circuit**.
8	Torque	**PR015:** Engine torque	**N/A**	This parameter is only valid when the engine has been started

GETtheMANUALS.org

NOTES	Only carry out this conformity check after a full check with the diagnostic tool. The values shown in this conformity check are given as a guide. Test conditions: **ENGINE OFF, IGNITION ON**.

AIR CIRCULATION (TURBOCHARGING/INLET)

Order	Function	Parameter, Status Check or Action		Display and Notes	Fault finding
1	Engine running	**PR055:**	Engine speed	Indicates the engine's speed of rotation in rpm. **Ignition on:** **0 rpm**	In the event of a fault, refer to the interpretation for fault **DF005 Engine speed sensor circuit**.
2	Temperature	**PR058:**	Air temperature	Indicates the inlet air temperature **Default value: 20°C**	In the event of a fault, refer to the interpretation of fault **DF039 Inlet air temperature sensor circuit**
3	Turbocharging	**PR009:**	Turbocharging pressure setpoint	**790 < X < 1010 mbar**	None
		PR041:	Turbocharging pressure	**PR041 = PR035 ± 10 mbar**	In the event of a fault, consult the interpretation of **DF004 Turbocharging pressure sensor circuit**.
		PR209:	Turbocharging pressure loop difference	**X = PR009 - PR041 = ~ 0**	If **PR209** is significant, refer to the interpretation of the **AC004 Turbocharging solenoid valve** command.
		PR047:	Turbocharging pressure OCR	**X < 5%**	The opening cyclic ratio should be identical to the correction of the solenoid valve position
		PR011:	Turbocharging solenoid valve position sensor	**X < 5%**	

*OCR: Opening cycle ratio

GETtheMANUALS.org

NOTES	Only carry out this conformity check after a full check with the diagnostic tool. The values shown in this conformity check are given as a guide. Test conditions: **ENGINE OFF, IGNITION ON**.

AIR CIRCULATION (TURBOCHARGING/INLET) (continued 1)

Order	Function	Parameter, Status Check or Action		Display and Notes	Fault finding
4	Air circulation	**PR035:**	Atmospheric pressure	Indicates the atmospheric pressure in mbar. The sensor is built into the computer. **Default value: 750 mbar.**	In the event of a fault, consult the interpretation of **DF003 Atmospheric pressure sensor circuit**.
		PR132:	Air flow	**0 < X < 10 kg/h**	In the event of a fault, consult the interpretation of parameter **DF056 Air flow sensor circuit**.
		PR049:	Swirl flap OCR (except Vel Satis ph2 Vdiag 14)	**100%**	In the event of a fault, consult the interpretation of **DF227 Swirl flap**.
		PR013:	Swirl flap position correction (except Vel Satis ph2 Vdiag 14)	**X < 5%**	In the event of a fault, consult the interpretation for fault **DF226 Damper valve circuit**.
		PR672:	Damper valve position setpoint	**X < 5%**	
		PR417:	Damper valve OCR	**X < 5%**	
		PR420:	Damper valve error counter	**X = 0**	

GETtheMANUALS.org

NOTES	Only carry out this conformity check after a full check with the diagnostic tool. The values shown in this conformity check are given as a guide. Test conditions: **ENGINE OFF, IGNITION ON**.

AIR CIRCULATION (TURBOCHARGING/INLET) (continued 2)

Order	Function	Parameter, Status Check or Action	Display and Notes	Fault finding
5	Sensor feed	**PR083:** Air temperature sensor voltage	**1.90 < X < 3.10 V** **Default value: 5 V**	In the event of a fault, refer to the interpretation of fault **DF039 Inlet air temperature sensor circuit**
		PR079: Atmospheric pressure sensor voltage	**3.80 < X < 4 V**	In the event of a fault, consult the interpretation of **DF003 Atmospheric pressure sensor circuit**.
		PR073: Air flowmeter feed voltage	**0.5 V < X < 1 V** **Safe value: 0 V**	In the event of a fault, refer to the interpretation of fault **DF013 Sensor feed voltage no. 3**

GETtheMANUALS.org

NOTES	Only carry out this conformity check after a full check with the diagnostic tool. The values shown in this conformity check are given as a guide. Test conditions: **ENGINE OFF, IGNITION ON**.

FUEL CIRCUIT

Order	Function	Parameter, Status Check or Action		Display and Notes	Fault finding
1	Engine speed	**PR055:**	Engine speed	Shows the engine's speed of rotation RPM **Ignition on:** **0 rpm.**	In the event of a fault, refer to the interpretation for fault **DF005 Engine speed sensor circuit**.
2	Injector codes	**ET104:**	Injector code operation	**"YES"** Indicates whether the injector codes have been programmed	In the event of a fault, consult the interpretation of **DF276 Injector code programming**.
3	Temperature	**PR063:**	Fuel temperature	Indicates the fuel temperature **Default value: 100°C**	In the event of a fault, consult the interpretation of **DF098 Fuel temperature sensor circuit**.
4	Pressure	**PR008:**	Rail pressure setpoint	Indicates the theoretical pressure value for optimum engine operation **X = 250 ± 50 bar**	In the event of a fault, refer to the interpretation of fault **DF053 Rail pressure regulator function**.
		PR038:	Rail pressure	**X = 0 bar** **Default value:** **250 bar.**	In the event of a fault, consult the interpretation of fault **DF007 Rail pressure sensor circuit**.
		PR048:	Rail pressure regulation valve OCR	**X = 15%**	
		PR213:	Rail pressure loop difference	**X = PR008 - PR038**	The fuel pressure variation is the difference between the rail pressure and the rail pressure setpoint. In the event of a fault, consult the interpretation of fault **DF007 Rail pressure sensor circuit**.

GETtheMANUALS.org

NOTES	Only check conformity after a full check with the **diagnostic tool**. The values shown in this conformity check are given as a guide. Test conditions: **ENGINE OFF, IGNITION ON**.

FUEL CIRCUIT (continued)

Order	Function	Parameter, Status Check or Action		Display and Notes	Fault finding
5	Flow	**PR157:**	Fuel flow setpoint	**X = 0 < X < 60 mg/st**	None
		PR017:	Fuel flow	**PR017 = PR157**	None
		PR364:	Cylinder no. 1 fuel flow correction	**0.0 mg/st**	In the event of a fault, consult **TEST 10 Poor injector operation**.
		PR405:	Cylinder no. 2 fuel flow correction		
		PR406:	Cylinder no. 3 fuel flow correction		
		PR365:	Cylinder no. 4 fuel flow correction		
6	Rail current	**PR007:**	Rail pressure regulator current setpoint	**X = 400 ± 5 mA Default value: 1600 mA**	In the event of a fault, consult the interpretation of fault **DF007 Rail pressure sensor circuit**.
		PR006:	Rail pressure regulator current	**PR006 = PR007 ± 5 mA Default value: 1600 mA**	
7	Sensor voltage	**PR082:**	Fuel temperature sensor voltage	**1.8 < X < 4 V default value: 5 V**	In the event of a fault, consult the interpretation of faults **DF011 Sensor feed no. 1 voltage, DF012 Sensor feed no. 2 voltage and DF013 Sensor feed no. 3 voltage**.
		PR080:	Rail pressure sensor voltage	**0.5 V < X < 1 V Default value: 5 V**	

GETtheMANUALS.org

NOTES	Only carry out this conformity check after a full check with the diagnostic tool. The values shown in this conformity check are given as a guide. Test conditions: **ENGINE OFF, IGNITION ON**.

EMISSION CONTROL/OBD

Order	Function	Parameter, Status Check or Action		Display and Notes	Fault finding
1	Engine speed	**PR055:**	Engine speed	Indicates the engine's rotation speed in rpm	In the event of a fault, refer to the interpretation for fault **DF005 Engine speed sensor circuit**.
2	Exhaust gas recirculation	**ET651:**	EGR programming cu-off	**STATUS 16**	In the event of a fault, refer to the interpretation of **ET651 EGR programming cut-off**.
		PR005:	EGR valve opening setpoint	Gives a theoretical EGR valve opening value for optimum engine operation. **- 10 < X < 0%**	In the event of a fault, refer to fault interpretation **DF272 EGR control circuit**.
		PR051:	EGR valve position feedback	**- 10 < X < 0%**	In the event of a fault, refer to the interpretation of **DF118 EGR solenoid valve control**. The EGR valve position feedback loop difference must equal the difference between the EGR valve position and the position feedback.
		PR022:	EGR valve position feedback loop difference	**PR022 = PR005 - PR051**	
		PR128:	First EGR valve offset	**10% < X < 4% (average value)**	In the event of a fault, apply command **SC036 Reset programming and EGR valve**.
		PR129:	Last EGR valve offset	**10% < X < 4% (average value)**	
		PR587:	Cooling of recirculated exhaust gas	**INACTIVE if coolant temperature < 65°C**	In the event of a fault, consult the interpretation of fault **DF304 EGR by-pass circuit**.

GETtheMANUALS.org

NOTES	Only carry out this conformity check after a full check with the diagnostic tool. The values shown in this conformity check are given as a guide. Test conditions: **ENGINE OFF, IGNITION ON**.

EMISSION CONTROL/OBD (continued 1)

Order	Function	Parameter, Status Check or Action		Display and Notes	Fault finding
3	Air regulation	**PR171:**	Air flow setpoint for the EGR	**750 ± 200 mg/st**	In the event of a fault, consult the interpretation of parameter **DF056 Air flow sensor circuit**.
		PR132:	Air flow	**X = 0 kg/h**	
		PR146:	Inlet air flow	Shows the flow of air entering the engine in mg/st. **0 mg/st**	
		PR131:	EGR air flow variation	**PR131 = PR132 - PR171**	
		ET078:	Air regulation	**ACTIVE**	**If INACTIVE, switch off the ignition and wait 40 seconds before trying again.**
4	Sensor feed	**PR077:**	EGR valve position sensor voltage	**0.5 < X < 1.5 V** **default value: 0 V**	In the event of a fault, refer to the interpretation of fault **DF012 Sensor feed voltage no. 2**.
5	Coolant temperature	**PR064:**	Coolant temperature	Shows the engine coolant temperature in °C **Default value: 119°C.**	In the event of a fault, refer to the interpretation of **DF001 Coolant temperature sensor circuit**.

GETtheMANUALS.org

notes	Only carry out this conformity check after a complete check **with the diagnostic tool**. The values shown in this conformity check are given as a guide. Test conditions: **ENGINE OFF, IGNITION ON**.

PARTICLE FILTER SUB-FUNCTION

Function	Parameter, Status Check or Action		Display and Notes	Fault finding
Particle filter	**PR414:**	Particle filter differential pressure	**X = 0 ± 1 mbar**	In the event of a fault, consult the interpretation of **DF315 Particle filter differential pressure sensor**.
	PR385:	Exhaust pipe flow	When stationary **0 m^3/h**.	None
	PR383:	Weight of soot in the particle filter	**X < 45 g**	If the weight is greater than 45 g, consult the interpretation of **DF315 "Particle filter differential pressure sensor**.
	PR382:	Particle filter upstream temperature	**X ≈ 200°C**	In the event of a fault, consult the interpretation of **DF310 Particle filter upstream temperature sensor**.
	PR381:	Particle filter downstream temperature	**X ≈ 200°C**	In the event of a fault, consult the interpretation of **DF309 Particle filter downstream temperature sensor**.
	PR412:	Mileage at last successful regeneration	Value taken since the last dynamic regeneration (when driving)	If replacing the particle filter, run **SC036 Reinitialise programming**.
	PR415:	Time since last regeneration		
	PR391:	Mileage since particle filter replacement	Mileage counter since last particle filter replacement	
	PR1012:	Weight of soot after regeneration	Indicates the weight of soot remaining in the particle filter after running command **SC017 Particle filter regeneration**.	Consult the interpretation of **PR1012**.

GETtheMANUALS.org

NOTES	Only check conformity after a full check with the **diagnostic tool**. The values shown in this conformity check are given as a guide. Test conditions: **ENGINE OFF, IGNITION ON**.

PARTICLE FILTER HISTORY SUB-FUNCTION

Order	Function	Parameter, Status Check or Action		Display and Notes	Fault finding
1	Particle filter history	**PR784 to PR793:**	DF312 record No. 1 to DF312 record No. 10	Mileages of the last ten occurrences of **DF312 Speed request**	If **STOPPED**, refer to the interpretation of fault **DF312 Speed request**.
		PR794 to PR803:	Stored regeneration failure No. 1 to Stored regeneration failure No. 10	Mileage of the last ten regeneration failures	
		ET706 to ET715:	Stored engine status No. 1 to Stored engine status No. 10	This status indicates the stored engine status when there is a regeneration failure while driving: **NONE, + AFTER IGNITION FEED, RUNNING, STOPPED**.	
		PR816 to PR825:	Stored regeneration start No. 1 to Stored regeneration start No. 10	Distance of the last ten regeneration starts	Only interpret these parameters when interpreting **ALP 8 Particle filter warning light comes on too frequently**.
		ET742 to ET751:	Stored regeneration request status N°1 to Stored regeneration request status N°10	This status indicates the status of the regeneration request	Only interpret these statuses when interpreting **ALP 8 Particle filter warning light comes on too frequently**.

GETtheMANUALS.org

NOTES	Only carry out this conformity check after a full check with the diagnostic tool. The values shown in this conformity check are given as a guide. Test conditions: **ENGINE OFF, IGNITION ON**.

COLD LOOP

Order	Function	Parameter, Status Check or Action		Display and Notes	Fault finding
1	Engine	**PR055:**	Engine speed	Indicates the engine's rotation speed in rpm	In the event of a fault, refer to the interpretation for fault **DF005 Engine speed sensor circuit**.
2	Driver control	**ET088:**	Compressor actuation request	**INACTIVE**	If the air conditioning is authorised or the compressor is actuated (see **62A Air conditioning**).
		ET004:	Air conditioning authorisation	**NO**	
3	Air conditioning speed	**PR053:**	Speed requested by air conditioning	**N/A.**	This parameter is only valid when the engine has been started
4	Power	**PR125:**	Power consumed by the air conditioning compressor	**0 W**	None
5	Engine cooling	**ET143:**	Low-speed fan assembly relay control	With the ignition switched on < 80° **INACTIVE**	If the fan assemblies are supplied with the ignition on, the injection may be in defect mode. Carry out a system fault test and refer to the interpretation of any faults.
		ET144:	High-speed fan assembly relay control		
		ET014:	Check cooling fan 1	With the ignition switched on < 80° **STOPPED**	
		ET015:	Check fan assembly 2		

GETtheMANUALS.org

NOTES	Only carry out this conformity check after a full check with the diagnostic tool. The values shown in this conformity check are given as a guide. Test conditions: **ENGINE OFF, IGNITION ON**.

COLD LOOP (continued)

Order	Function	Parameter, Status Check or Action	Display and Notes	Fault finding
6	Coolant temperature	**PR064:** Coolant temperature	Shows the engine coolant temperature in °C **Default value: 119°C.**	In the event of a fault, refer to the interpretation of **DF001 Coolant temperature sensor circuit**.
7	Vehicle speed	**PR089:** Vehicle speed	Gives the vehicle speed in mph. This parameter is transmitted by the ABS computer. This signal is transmitted to the injection on the multiplex network.	In the event of a fault test the multiplex network. For the interpretation of possible faults (**see 38C, anti-lock braking system**).

GETtheMANUALS.org

NOTES	Only carry out this conformity check after a full check with the diagnostic tool. The values shown in this conformity check are given as a guide. Test conditions: **ENGINE OFF, IGNITION ON**.

DRIVER PARAMETERS

Order	Function	Parameter, Status Check or Action	Display and Notes	Fault finding
1	Engine	**PR055:** Engine speed	Indicates the engine's rotation speed in rpm	In the event of a fault, refer to the interpretation for fault **DF005 Engine speed sensor circuit**.
		PR190: Idle speed setpoint	Indicates the engine's rotational speed setpoint in rpm.	
2	Accelerator pedal position *	**PR030:** Accelerator pedal position	Indicates the accelerator pedal position. **If no pressure is being applied to the pedal PR030 = 0%**	In the event of a fault, refer to the interpretation of fault **DF008 Pedal potentiometer circuit gang 1** or **DF009 Pedal potentiometer circuit gang 2**.
3	Sensor feed	**PR147:** Pedal potentiometer voltage gang 1	Accelerator pedal released **0.75 < X < 0.80 V**	In the event of a fault, refer to the interpretation of fault **DF008 Pedal potentiometer voltage gang 1** or **DF009 Pedal potentiometer voltage gang 2**.
		PR148: Pedal potentiometer voltage gang 2	Accelerator pedal released **0.35 < X < 0.40 V**	

GETtheMANUALS.org

NOTES	Only carry out a conformity check after a **complete check** with the **diagnostic tool**. The values shown in this conformity check are given as a guide. Test conditions: **ENGINE OFF, IGNITION ON**.

DRIVER PARAMETERS (continued)

Order	Function	Parameter, Status Check or Action	Display and Notes	Fault finding
4	Brake contact	**ET704:** Brake switch no. 1	Indicates recognition of brake pedal contacts **INACTIVE**	In the event of a fault, consult the interpretation of status **ET704 Brake switch no. 1**.
		ET705: Brake switch no. 2		In the event of a fault, consult the interpretation of status **ET705 Brake switch no. 2**.
5	Clutch pedal	**ET233:** Clutch pedal	Indicates recognition of clutch pedal contacts **RELEASED**	In the event of a fault, consult the interpretation of status **ET233 Clutch pedal**.

(*) Pedal voltages - cold, ignition on (average values stated for information only).

Pedal load	0%	25%	50%	100%	120%
Voltage gang 1	**0.76 V**	**1.52 V**	**2.09 V**	**3.23 V**	**3.68 V**
Voltage gang 2	**0.37 V**	**0.74 V**	**1.02 V**	**1.56 V**	**1.79 V**

GETtheMANUALS.org

NOTES	Only carry out this conformity check after a full check with the diagnostic tool. The values shown in this conformity check are given as a guide. Test conditions: **ENGINE OFF, IGNITION ON**.

HEATING

Order	Function	Parameter, Status Check or Action		Display and Notes	Fault finding
1	Coolant temperature	**PR064:**	Coolant temperature	Shows the engine coolant temperature in °C Default value: 119°C.	In the event of a fault, refer to the interpretation of **DF001 Coolant temperature sensor circuit**.
		PR403:	Idle speed request by the thermoplungers	**Not applicable**	This parameter is only valid when the engine has been started
2	Thermoplungers	**ET205:**	Thermoplunger no. 1 relay control	**ACTIVE or INACTIVE** According to computer programming	In the event of a fault, consult the interpretation of **DF240 Thermoplunger no. 1 relay circuit**.
		ET206:	Thermoplunger no. 2 relay control		In the event of a fault, consult the interpretation of **DF239 Thermoplunger no. 2 relay circuit**.
		ET207:	Thermoplunger no. 3 relay control		In the event of a fault, consult the interpretation of **DF238 Thermoplunger no. 3 relay circuit**.
		PR401:	Thermoplungers power request	Indicates the power consumed by the thermoplungers in W	None

GETtheMANUALS.org

NOTES	Only carry out this conformity check after a full check with the diagnostic tool. The values shown in this conformity check are given as a guide. Test conditions: **ENGINE OFF, IGNITION ON**.

CRUISE CONTROL/SPEED LIMITER

Order	Function	Parameter, Status Check or Action	Display and Notes	Fault finding
1	Cruise control/ speed limiter	**PR089:** Vehicle speed	**Indicates the vehicle speed in mph (km/h). This parameter is transmitted by the ABS computer. This signal is transmitted to the injection on the multiplex network.**	In the event of a fault test the multiplex network. For the interpretation of possible faults (**see 38C, anti-lock braking system**).
		PR130: Cruise control setpoint	**Indicates the cruise control speed limit**	In the event of a fault, refer to the interpretation of statuses **ET042 Cruise control/Speed limiter, ET556 Driver deactivation of Cruise control/Speed limiter and ET557 Deactivation of Cruise control/Speed limiter by function**.
		ET042: Cruise control/ speed limiter	**INACTIVE:** When no button is pressed.	In the event of a fault, refer to the interpretation of status ET042.
			CRUISE CONTROL: cruise control ON/OFF button pressed	Lights the green warning light on the instrument panel.
			LIMITER: speed limiter ON/OFF button pressed	Lights the orange warning light on the instrument panel.

GETtheMANUALS.org

NOTES	Only carry out this conformity check after a full check with the diagnostic tool. The values shown in this conformity check are given as a guide. Test conditions: **ENGINE OFF, IGNITION ON**.

CRUISE CONTROL/SPEED LIMITER (continued 1)

Order	Function	Parameter, Status Check or Action	Display and Notes	Fault finding
1	Cruise control/ speed limiter (continued)	**ET413:** Cruise control/ speed limiter function	**INACTIVE:** When no button is pressed.	In the event of a fault, refer to the interpretation of statuses **ET042 Cruise control/Speed limiter, ET413 Cruise control/Speed limiter deactivation ET556 Cruise control/Speed limiter deactivation by driver and ET557 Cruise control/Speed limiter deactivation by function**.
			INCREASE: increase button pressed	
			DECREASE: decrease button pressed	
			CANCEL: "0" button pressed	
			REPEAT: R button pressed	
		ET556:	**STATUS 1:** Brake pedal depressed	The cruise control and speed limiter functions can be deactivated by various events. **IMPORTANT** Certain deactivations are stored; to reinitialise this status use **RZ007 Fault memory**. In the event of a fault, refer to the interpretation of statuses **ET042 Cruise control/Speed limiter, ET413 Cruise control/Speed limiter deactivation ET456 Cruise control/Speed limiter deactivation by driver and ET557 Cruise control/Speed limiter deactivation by function**.
			STATUS 2: traction control request	
			STATUS 3: suspend button pressed	
			STATUS 4: clutch pedal depressed	
			STATUS 5: gear lever in neutral	
			STATUS 6: inconsistency between the request and the vehicle speed	
		ET557:	**STATUS 1:** Cruise control or speed limiter fault	
			STATUS 2: fault detected by the injection computer	
			STATUS 3: vehicle speed invalid	

GETtheMANUALS.org

NOTES	Only carry out a conformity check after a **complete check** with the **diagnostic tool**. The values shown in this conformity check are given as a guide. Test conditions: **ENGINE OFF, IGNITION ON**.

CRUISE CONTROL/SPEED LIMITER (continued 2)

Order	Function	Parameter, Status Check or Action	Display and Notes	Fault finding
2	Brake switch	**ET704:** Brake switch no. 1 **ET705:** Brake switch no. 2	Brake pedal released **INACTIVE**	In the event of a fault, consult the interpretation of statuses **ET704 and ET705**.
3	Clutch switch	**ET233:** Clutch pedal	Brake pedal released **RELEASED**	In the event of a fault, consult the interpretation of **DF070 Clutch switch circuit**.

GETtheMANUALS.org

NOTES	Only carry out this conformity check after a full check with the diagnostic tool. The values shown in this conformity check are given as a guide. Test conditions: **ENGINE OFF, IGNITION ON**.

ENGINE COOLING

Order	Function	Parameter, Status Check or Action		Display and Notes	Fault finding
1	Coolant temperature	**PR064:**	Coolant temperature	Shows the engine coolant temperature in °C **Default value: 119°C.**	In the event of a fault, refer to the interpretation of **DF001 Coolant temperature sensor circuit**.
2	Fan assemblies	**ET143:**	Low-speed fan assembly relay control	With the ignition switched on, engine < 80° **INACTIVE**	If the fan assemblies are supplied with the ignition on, the injection system may be in defect mode. Carry out a system fault test and refer to the interpretation of faults.
		ET144:	Low-speed fan assembly relay control		
		ET014:	Check fan assembly 1	With the ignition switched on, engine < 80° **STOPPED**	
		ET015:	Check fan assembly 2		
3	Sensor feed	**PR084:**	Coolant temperature sensor voltage	**3 < X < 4 V** **Default value: 5 V**	In the event of a fault, refer to the interpretation of **DF001 Coolant temperature sensor circuit**.

GETtheMANUALS.org

NOTES	Only carry out this conformity check after a full check with the diagnostic tool. The values shown in this conformity check are given as a guide. Test conditions: **ENGINE OFF, IGNITION ON**.

IGNITION/PREHEATING

Order	Function	Parameter, Status Check or Action		Display and Notes	Fault finding
1	Power supply	**ET001:**	Computer + after ignition feed	**PRESENT**	In the event of a fault, carry out a fault finding procedure on the charge circuit.
2	Engine	**ET038:**	Engine	**STOPPED**	None
		PR055:	Engine speed	Indicates the engine's rotation speed in rpm	In the event of a fault, refer to the interpretation for fault **DF005 Engine speed sensor circuit**.
3	Temperature	**PR058:**	Air temperature	Indicates the inlet air temperature in °C **Default value: 20°C**	In the event of a fault, refer to the interpretation of fault **DF039 Inlet air temperature sensor circuit**
		PR064:	Coolant temperature	Shows the engine coolant temperature in °C **Default value: 119°C.**	In the event of a fault, refer to the interpretation of **DF001 Coolant temperature sensor circuit**.
4	Preheating	**ET007:**	Pre-postheating unit control	**Status ET007 is ACTIVE a few seconds after the ignition is switched on and for the postheating**	In the event of a fault, (ET007 locked in ACTIVE), refer to the interpretation of fault **DF017 Preheating unit control circuit**.
5	Power supply	**PR071:**	Computer supply voltage	**9 V < voltage < 16 V**	In the event of a fault, consult the interpretation of fault **DF047 computer supply voltage**.

GETtheMANUALS.org

NOTES	Only carry out this conformity check after a full check with the diagnostic tool. The values shown in this conformity check are given as a guide. Test conditions: **ENGINE OFF, IGNITION ON**.

STARTING

Order	Function	Parameter, Status Check or Action		Display and Notes	Fault finding
1	Power supply	**ET001:**	Computer + after ignition feed	**PRESENT**	In the event of a fault, carry out a fault finding procedure on the charge circuit.
2	Starting	**ET238:**	Synchronisation	**NOT PERFORMED**	In the event of a fault, refer to fault interpretation **DF195 Camshaft/engine speed sensor consistency**.
		ET076:	Starting	**AUTHORISED**	If status **ET076 is PROHIBITED**, carry out a complete fault finding procedure on the multiplex network.
3	Engine operation.	**ET038:**	Engine	**STOPPED**	None
4	Power supply	**PR071:**	Computer supply voltage	**9 V < voltage < 16 V**	In the event of a fault, consult the interpretation of fault **DF047 Computer supply voltage**.
		PR358:	Sensor reference voltage	**3.4 V < voltage < 3.8 V**	None

GETtheMANUALS.org

NOTES	Only carry out this conformity check after a full check with the diagnostic tool. The values shown in this conformity check are given as a guide. Test conditions: **ENGINE OFF, IGNITION ON**.

PROTECTION

Order	Function	Parameter, Status Check or Action	Display and Notes	Fault finding
1	Engine immobiliser	**ET341:** Immobiliser code programmed	**YES**	If status ET341 is locked on NO (**see 87B, Connection unit**).
		ET003: Engine immobiliser	**INACTIVE**	If status ET003 is locked on ACTIVE (see **87B, Connection unit**).
2	Vehicle impact	**ET077:** Impact detected	**NO**	In the event of a fault, refer to the interpretation of fault **DF069 Impact detected signal**.
3	Starting	**ET076:** Starting	**AUTHORISED: injection authorises starting**	If status ET076 is PROHIBITED (see **87B, Connection unit**).

GETtheMANUALS.org

NOTES	Only carry out this conformity check after a full check with the diagnostic tool. The values shown in this conformity check are given as a guide. Test conditions: **Engine at idle speed, coolant temperature > 80°**.

MAIN COMPUTER STATUSES AND PARAMETERS

Order	Function	Parameter, Status Check or Action		Display and Notes	Fault finding
1	Vehicle impact	**ET077:**	Impact detected	**NO**	In the event of a fault, refer to the interpretation of fault **DF069 Impact detected signal**.
2	Power supply	**ET001:**	Computer + after ignition feed	**PRESENT**	In the event of a fault, refer to the interpretation of **DF015 Main relay control circuit**.
		PR071:	Computer supply voltage	**9 V < X < 16 V**	In the event of a fault, carry out a fault finding procedure on the charging circuit and refer to the interpretation for **DF047 Computer supply voltage**.
		PR358:	Sensor reference voltage	**3.4 V < X <3.8 V**	None
3	Speed	**PR190:**	Engine idle speed setpoint.	Indicates the engine's rotational speed setpoint in rpm.	In the event of a fault, refer to the interpretation for fault **DF005 Engine speed sensor circuit**.
		PR055:	Engine speed	Indicates the engine's speed of rotation in rpm. **800 rpm**	
4	Injection configuration	**ET104:**	Injector code use	**YES**	This status indicates that the IMA function is activated. In the event of a fault, consult the interpretation of **DF276 Injector code programming**.

GETtheMANUALS.org

NOTES	Only carry out this conformity check after a full check with the diagnostic tool. The values shown in this conformity check are given as a guide. Test conditions: **Engine at idle speed, coolant temperature > 80°**.

MAIN COMPUTER STATUSES AND PARAMETERS (continued)

Order	Function	Parameter, Status Check or Action	Display and Notes	Fault finding
5	Pressure	**PR035:** Atmospheric pressure	Indicates the atmospheric pressure in mbar. The sensor is built into the computer. **Default value: 750 mbar.**	In the event of a fault, consult the interpretation of **DF003 Atmospheric pressure sensor circuit**.
		PR038: Rail pressure	**250 < X < 350 bar**	In the event of a fault, consult the interpretation of fault **DF007 Rail pressure sensor circuit**.
6	Temperature	**PR058:** Air temperature	Shows the inlet air temperature **Default value: 20°C**	In the event of a fault, refer to the interpretation for **DF039 Inlet air temperature circuit sensor**
		PR064: Coolant temperature	Shows the engine coolant temperature in °C **Default value: 119°C.**	In the event of a fault, refer to the interpretation of **DF001 Coolant temperature sensor circuit**.
7	Torque	**PR015:** Engine torque	**N/A.**	This parameter is only valid when the engine has been started
8	Speed signal	**PR089:** Vehicle speed	Indicates the vehicle speed in mph (km/h). This parameter is transmitted by the ABS computer. This signal is transmitted to the injection on the multiplex network.	In the event of a fault, carry out a multiplex network test, see **38C**, ABS note.

GETtheMANUALS.org

NOTES	Only carry out this conformity check after a full check with the diagnostic tool. The values shown in this conformity check are given as a guide. Test conditions: **Engine at idle speed, coolant temperature > 80°**.

AIR CIRCULATION (TURBOCHARGING/INLET)

Order	Function	Parameter, Status Check or Action		Display and Notes	Fault finding
1	Engine running	**PR055:**	Engine speed	Indicates the engine's speed of rotation in rpm.	In the event of a fault, refer to the interpretation for fault **DF005 Engine speed sensor circuit**.
2	Temperature	**PR058:**	Air temperature	Indicates the inlet air temperature **Default value: 20°C**	In the event of a fault, refer to the interpretation of fault **DF039 Inlet air temperature sensor circuit**
3	Turbocharging	**PR041:**	Turbocharging pressure	**PR041 = PR035 ± 10 mbar**	In the event of a fault, consult the interpretation of **DF004 Turbocharging pressure sensor circuit**.
		PR009:	Turbocharging pressure setpoint	**790 < X < 1010 mbar**	None
		PR209:	Turbocharging pressure loop difference	**X = PR009 - PR041 = ~ 0**	If **PR209** is significant, refer to the interpretation of the **AC004 Turbocharging solenoid valve** command.
		PR047:	Turbocharging pressure OCR*	**60 < X < 90%**	
		PR011:	Turbocharging solenoid valve position sensor	**60 < X < 90%**	The opening cyclic ratio should be identical to the correction of the solenoid valve position

*OCR: Opening cycle ratio

GETtheMANUALS.org

NOTES	Only carry out this conformity check after a full check with the diagnostic tool. The values shown in this conformity check are given as a guide. Test conditions: **Engine at idle speed, coolant temperature > 80°**.

AIR CIRCULATION (TURBOCHARGING/INLET) (continued 1)

Order	Function	Parameter, Status Check or Action		Display and Notes	Fault finding
4	Air circulation	**PR035:**	Atmospheric pressure	Indicates the atmospheric pressure in mbar. The sensor is built into the computer. **Default value: 750 mbar.**	In the event of a fault, consult the interpretation of **DF003 Atmospheric pressure sensor circuit**.
		PR132:	Air flow	**25 < X < 50 kg/h**	In the event of a fault, consult the interpretation of parameter **DF056 Air flow sensor circuit**.
		PR049:	Swirl flap OCR (Except Vel Satis ph2 Vdiag 14)	**100%**	In the event of a fault, consult the interpretation of **DF227 Swirl flap**.
5	Air circulation	**PR013:**	Swirl flap position correction (Except Vel Satis ph2 Vdiag 14)	**X < 5%**	In the event of a fault, consult the interpretation of fault **DF227 Swirl flap**.
		PR672:	Damper valve position setpoint	**X < 5%**	In the event of a fault, consult the interpretation for fault **DF226 Damper valve circuit**.
		PR417:	Damper valve OCR	**X < 5%**	
		PR420:	Damper valve error counter	**X = 0**	

GETtheMANUALS.org

NOTES	Only carry out this conformity check after a full check with the diagnostic tool. The values shown in this conformity check are given as a guide. Test conditions: **Engine at idle speed, coolant temperature > 80°**.

AIR CIRCULATION (TURBOCHARGING/INLET) (continued 2)

Order	Function	Parameter, Status Check or Action	Display and Notes	Fault finding
6	Sensor feed	**PR083:** Air temperature sensor voltage	**1.90 < X < 3.10 V** **Default value: 5 V**	In the event of a fault, refer to the interpretation of fault **DF039 Inlet air temperature sensor circuit**
		PR079: Atmospheric pressure sensor voltage	**3.80 < X < 4 V**	In the event of a fault, consult the interpretation of **DF003 Atmospheric pressure sensor circuit**.
		PR073: Air flowmeter feed voltage	**1.5 < X < 2.5 V** **Safe value: 0 V**	In the event of a fault, refer to the interpretation of fault **DF013 Sensor feed voltage no. 3**

GETtheMANUALS.org

NOTES	Only carry out this conformity check after a full check with the diagnostic tool. The values shown in this conformity check are given as a guide. Test conditions: **Engine at idle speed, coolant temperature > 80°**.

FUEL CIRCUIT

Order	Function	Parameter, Status Check or Action		Display and Notes	Fault finding
1	Engine speed	**PR055:**	Engine speed	Indicates the engine's speed of rotation in rpm. **Ignition on:** **0 rpm.**	In the event of a fault, refer to the interpretation for fault **DF005 Engine speed sensor circuit**.
2	Injector codes	**ET104:**	Injector code operation	**"YES"** Indicates whether the injector codes have been programmed	In the event of a fault, consult the interpretation of **DF276 Injector code programming**.
3	Temperature	**PR063:**	Fuel temperature	Indicates the fuel temperature **Default value: 100°C**	In the event of a fault, consult the interpretation of **DF098 Fuel temperature sensor circuit**.
4	Pressure	**PR008:**	Rail pressure setpoint	Indicates the theoretical pressure value for optimum engine operation **X = 250 ± 50 bar**	In the event of a fault, refer to the interpretation of fault **DF053 Rail pressure regulator function**.
		PR038:	Rail pressure	**X = ~ 300 bar** **Default value: 250 bar.**	In the event of a fault, consult the interpretation of fault **DF007 Rail pressure sensor circuit**.
		PR048:	OCR* rail pressure regulation valve	**35 < X < 45%**	
		PR213:	Rail pressure loop difference	**X = PR008 - PR038**	The fuel pressure variation is the difference between the rail pressure and the rail pressure setpoint. In the event of a fault, consult the interpretation of fault **DF007 Rail pressure sensor circuit**.

*OCR: Opening cycle ratio

GETtheMANUALS.org

NOTES	Only carry out this conformity check after a full check with the diagnostic tool. The values shown in this conformity check are given as a guide. Test conditions: **Engine at idle speed, coolant temperature > 80°**.

FUEL CIRCUIT (continued)

Order	Function	Parameter, Status Check or Action		Display and Notes	Fault finding
5	Flow	**PR157:**	Fuel flow setpoint	**X = 0 < X < 60 mg/st**	None
		PR017:	Fuel flow	**PR017 = PR157**	None
		PR364:	Cylinder no. 1 fuel flow correction	**± 1 mg/st**	In the event of a fault, consult **TEST 10 POOR INJECTOR OPERATION**.
		PR405:	Cylinder no. 2 fuel flow correction		
		PR406:	Cylinder no. 3 fuel flow correction		
		PR365:	Cylinder no. 4 fuel flow correction		
6	Rail current	**PR007:**	Rail pressure regulator current setpoint	**X = 1400 ± 50 mA Default value: 1600 mA**	In the event of a fault, consult the interpretation of fault **DF007 Rail pressure sensor circuit**.
		PR006:	Rail pressure regulator current	**PR006 = PR007 ± 5 mA Default value: 1600 mA**	
7	Sensor voltage	**PR082:**	Fuel temperature sensor voltage	**1.8 < X < 4 V default value: 5 V**	In the event of a fault, consult the interpretation of faults **DF011 Sensor feed no. 1 voltage, DF012 Sensor feed no. 2 voltage and DF013 Sensor feed no. 3 voltage**.
		PR080:	Rail pressure sensor voltage	**1 < X < 1.5 V Default value: 5 V**	

GETtheMANUALS.org

NOTES	Only carry out this conformity check after a full check with the diagnostic tool. The values shown in this conformity check are given as a guide. Test conditions: **Engine at idle speed, coolant temperature > 80°**.

EMISSION CONTROL/OBD

Order	Function	Parameter, Status Check or Action		Display and Notes	Fault finding
1	Engine speed	**PR055:**	Engine speed	Indicates the engine's rotation speed in rpm	In the event of a fault, refer to the interpretation for fault **DF005 Engine speed sensor circuit**.
2	Exhaust gas recirculation	**ET651:**	EGR programming cut-off	**NONE**	In the event of a fault, refer to the interpretation of **ET651 EGR programming cut-off**.
		PR005:	EGR valve opening setpoint	Gives a theoretical EGR valve opening value for optimum engine operation. **20 < X < 40%**	In the event of a fault, refer to fault interpretation **DF272 EGR control circuit**.
		PR051:	EGR valve position feedback	**20 < X < 40%**	In the event of a fault, refer to the interpretation of **DF118 EGR solenoid valve control**. The EGR valve position feedback loop difference must equal the difference between the EGR valve position and the position feedback.
		PR022:	EGR valve position feedback loop difference	**PR022 = PR005 - PR051** **must be close to 0 at idle speed**	
		PR128:	First EGR valve offset	**10% < X < 40%** **(average value)**	In the event of a fault, apply command **SC036 Reset programming and EGR valve**.
		PR129:	Last EGR valve offset	**10% < X < 40%** **(average value)**	
		ET587:	Cooling of recirculated exhaust gas	**ACTIVE** **if coolant temperature > 65°C**	In the event of a fault, consult the interpretation of fault **DF304 EGR by-pass circuit**.

GETtheMANUALS.org

NOTES	Only carry out this conformity check after a full check with the diagnostic tool. The values shown in this conformity check are given as a guide. Test conditions: **Engine at idle speed, coolant temperature > 80°**.

EMISSION CONTROL/OBD (continued 1)

Order	Function	Parameter, Status Check or Action		Display and Notes	Fault finding
3	Air regulation	**PR171:**	Air flow setpoint for the EGR	**750 ± 200 mg/st**	In the event of a fault, consult the interpretation of parameter **DF056 Air flow sensor circuit**.
		PR132:	Air flow	**Approximately 250 mg/stroke** engine warm at idle speed	
		PR146:	Inlet air flow	Indicates the flow of air entering the engine in mg/st. **0 mg/st**	
		PR131:	EGR air flow variation	**X = PR146 - PR171 should be close to 0 with ignition on**	
		ET078:	Air regulation	**ACTIVE**	**If INACTIVE, switch off the ignition and wait 1 minute before trying again.**
4	Sensor feed	**PR077:**	EGR valve position sensor voltage	**1.5 < X < 2.5 V default value: 0 V**	In the event of a fault, refer to the interpretation of fault **DF012 Sensor feed voltage no. 2**.
5	Coolant temperature	**PR064:**	Coolant temperature	Shows the engine coolant temperature in °C **Default value: 119°C.**	In the event of a fault, refer to the interpretation of **DF001 Coolant temperature sensor circuit**.

GETtheMANUALS.org

NOTES	Only check conformity after a full check with the **diagnostic tool**. The values shown in this conformity check are given as a guide. Test conditions: **ENGINE WARM AT IDLE SPEED, COOLANT TEMPERATURE > 80°C, NO ELECTRICAL CONSUMERS RUNNING**.

PARTICLE FILTER SUB-FUNCTION

Function	Parameter, Status Check or Action		Display and Notes	Fault finding
Particle filter	**PR414:**	Particle filter particle filter	**10 < X < 100 mbar**	In the event of a fault, consult the interpretation of **DF315 Particle filter differential pressure sensor**.
	PR385:	Exhaust pipe flow	Exhaust gas flow in m^3/h. **20 < X < 80 m^3/h**	None
	PR383:	Weight of soot in the particle filter	**X < 45 g**	If the weight is greater than 45 g, consult the interpretation of **DF315 Particle filter differential pressure sensor**.
	PR382:	Particle filter upstream temperature	**X ≈ 200°C**	In the event of a fault, consult the interpretation of **DF310 Particle filter upstream temperature sensor**.
	PR381:	Particle filter downstream temperature	**X ≈ 200°C**	In the event of a fault, consult the interpretation of **DF309 Particle filter downstream temperature sensor**.
	PR412:	Mileage at last successful regeneration	Value taken since the last dynamic regeneration (when driving)	If replacing the particle filter, run **SC036 Reinitialise programming**.
	PR415:	Time since last regeneration		
	PR391:	Mileage since particle filter replacement	Mileage counter since last particle filter replacement	
	PR1012:	Weight of soot after regeneration	Indicates the weight of soot remaining in the particle filter after running command **SC017 Particle filter regeneration**	Consult the interpretation of **PR1012**.

GETtheMANUALS.org

NOTES	Only check conformity after a full check with the **diagnostic tool**. The values shown in this conformity check are given as a guide. Test conditions: **ENGINE WARM AT IDLE SPEED, COOLANT TEMPERATURE > 80°C, NO ELECTRICAL CONSUMERS RUNNING**.

PARTICLE FILTER HISTORY SUB-FUNCTION

Order	Function	Parameter, Status Check or Action		Display and Notes	Fault finding
1	Particle filter history	**PR784 to PR793:**	DF312 request No. 1 to DF312 request No. 10	Mileages of the last ten occurrences of **DF312 Speed request**	If **STOPPED**, refer to the interpretation of fault **DF312 Speed request**.
		PR794 to PR803:	Stored regeneration failure No. 1 to Stored regeneration failure No. 10	Mileage of the last ten regeneration failures	
		ET706 to ET715:	Stored engine status No. 1 to Stored engine status No. 10	This status indicates the stored engine status when there is a regeneration failure while driving: **NONE, + AFTER IGNITION FEED, RUNNING, STOPPED**.	
		PR816 to PR825:	Stored regeneration start No. 1 to Stored regeneration start No. 10	Distance of the last ten regeneration starts	Only interpret these parameters when interpreting **ALP 8 Particle filter warning light comes on too frequently**.
		ET742 to ET751:	Stored regeneration request status N°1 to Stored regeneration request status N°10	This status indicates the status of the regeneration request	Only interpret these statuses when interpreting **ALP 8 Particle filter warning light comes on too frequently**.

GETtheMANUALS.org

NOTES	Only check conformity after a complete check using the diagnostic tool. The values shown in this conformity check are given as a guide. Test conditions: **Engine at idle speed, coolant temperature > 80°**.

COLD LOOP

Order	Function	Parameter, Status checked or Action		Display and Notes	Fault finding
8	Engine	**PR055:**	Engine speed	Gives the engine speed of rotation in rpm	In the event of a fault, refer to the interpretation for fault **DF005 Engine speed sensor circuit**.
9	Driver control	**ET088:**	Compressor actuation request	**ACTIVE if air conditioning request**	If the air conditioning is authorised or the compressor is actuated (see **62A Air conditioning**).
		ET004:	Air conditioning authorisation	**YES if air conditioning request**	
10	Air conditioning speed	**PR053:**	Speed requested by air conditioning	**875 rpm depending on computer programming**	This parameter is only valid when the engine has been started
11	Output	**PR125:**	Power absorbed by the air conditioning compressor	Indicates the power absorbed by the air conditioning compressor	This parameter is only valid when the engine has been started
12	Engine cooling	**ET143:**	Low speed fan assembly relay control	**ACTIVE if air conditioning request**	If the fan assemblies are supplied with ignition on, the injection system may be in defect mode. Carry out a system fault test and refer to the interpretation of any faults.
		ET144:	High speed fan assembly relay control	**INACTIVE**	
		ET014:	Check cooling fan 1	**RUNNING if air conditioning requested**	
		ET015:	Monitor cooling fan 2	**STOPPED**	

GETtheMANUALS.org

NOTES	Only check conformity after a complete check using the diagnostic tool. The values shown in this conformity check are given as a guide. Test conditions: **Engine at idle speed, coolant temperature > 80°**.

COLD LOOP (continued)

Order	Function	Parameter, Status checked or Action	Display and Notes	Fault finding
13	Coolant temperature	**PR064:** Coolant temperature	Shows the engine coolant temperature in °C **Default value: 119 °C**	In the event of a fault, refer to the interpretation of **DF001 Coolant temperature sensor circuit**.
14	Vehicle speed	**PR089:** Vehicle speed	Gives the vehicle speed in mph. This parameter is transmitted by the ABS computer. This signal is transmitted to the injection on the multiplex network.	In the event of a fault, test the multiplex network. For the interpretation of possible faults (**see 38C, anti-lock braking system**).

GETtheMANUALS.org

NOTES	Only check conformity after a complete check using the diagnostic tool. The values shown in this conformity check are given as a guide. Test conditions: **Engine at idle speed, coolant temperature > 80°**.

DRIVER PARAMETERS

Order	Function	Parameter, Status checked or Action	Display and Notes	Fault finding
1	Engine	**PR055:** Engine speed	Gives the engine speed of rotation in rpm	In the event of a fault, refer to the interpretation for fault **DF005 Engine speed sensor circuit**.
		PR190: Idle speed setpoint	**Indicates the engine's rotational speed setpoint**	
2	Accelerator pedal position *	**PR030:** Accelerator pedal position	Indicates the accelerator pedal position. **If no pressure is being applied to the pedal PR030 = 0 %**	In the event of a fault, refer to the interpretation of fault **DF008 Pedal potentiometer circuit gang 1** or **DF009 Pedal potentiometer circuit gang 2**.
3	Sensor feed	**PR147:** Pedal potentiometer voltage gang 1	Accelerator pedal released **0.70 < X < 0.80 V**	In the event of a fault, refer to the interpretation of fault **DF008 Pedal potentiometer voltage gang 1** or **DF009 Pedal potentiometer voltage gang 2**.
		PR148: Pedal potentiometer voltage gang 2	Accelerator pedal released **0.35 < X < 0.40 V**	

GETtheMANUALS.org

NOTES	Only check the conformity after a **complete check** with the **diagnostic tool**. The values shown in this conformity check are given as a guide. Test conditions: **Engine at idle speed, coolant temperature > 80°**.

DRIVER PARAMETERS (continued)

Order	Function	Parameter, Status checked or Action	Display and Notes	Fault finding
4	Brake contact	**ET704:** Brake contact no. 1	Indicates recognition of brake pedal contacts **INACTIVE**	In the event of a fault, consult the interpretation of status **ET704 Brake switch no. 1**.
		ET705: Brake switch no. 2		In the event of a fault, consult the interpretation for status **ET705 Brake switch no. 2**
5	Clutch pedal	**ET233:** Clutch pedal	Indicates recognition of clutch pedal contacts **RELEASED**	In the event of a fault, consult the interpretation of status **ET233 Clutch pedal**.

(*) Pedal voltages - cold, ignition on (average values stated for information only).

Pedal load	**0 %**	**25 %**	**50 %**	**100 %**	**120 %**
Gang 1 voltage	**0.76 V**	**1.52 V**	**2.09 V**	**3.23 V**	**3.68 V**
Gang 2 voltage	**0.37 V**	**0.74 V**	**1.02 V**	**1.56 V**	**1.79 V**

GETtheMANUALS.org

NOTES	Only check conformity after a complete check using the diagnostic tool. The values shown in this conformity check are given as a guide. Test conditions: **Engine at idle speed, coolant temperature > 80°**.

HEATING

Order	Function	Parameter, Status checked or Action		Display and Notes	Fault finding
1	Coolant temperature	**PR064:**	Coolant temperature	Shows the engine coolant temperature in °C **Safe value: 119 °C**	In the event of a fault, refer to the interpretation of **DF001 Coolant temperature sensor circuit**.
		PR403:	Idle speed request by the heating elements	**875 rpm** if one of the three heating elements is ACTIVE	None
2	Heating elements	**ET205:**	Heating element no. 1 relay control	**ACTIVE or INACTIVE** According to computer programming	In the event of a fault, consult the interpretation of **DF240 Heating element no. 1 relay circuit**.
		ET206:	Heating element no. 2 relay control		In the event of a fault, consult the interpretation of **DF239 Heating element no. 2 relay circuit**.
		ET207:	Heating element no. 3 relay control		In the event of a fault, consult the interpretation of **DF238 Heating element no. 3 relay circuit**.
		PR401:	Heating elements power request	Indicates the power consumed by the heating elements in W	None

GETtheMANUALS.org

NOTES	Only check conformity after a complete check using the diagnostic tool. The values shown in this conformity check are given as a guide. Test conditions: **Engine at idle speed, coolant temperature > 80°**.

CRUISE CONTROL/SPEED LIMITER

Order	Function	Parameter, Status checked or Action	Display and Notes	Fault finding
1	Cruise control/ speed limiter	**PR089:** Vehicle speed	**Indicates the vehicle speed in mph (km/h). This parameter is transmitted by the ABS computer. This signal is transmitted to the injection on the multiplex network.**	In the event of a fault, test the multiplex network. For the interpretation of possible faults (**see 38C, anti-lock braking system**).
		PR130: Cruise control setpoint	**Indicates the cruise control speed limit**	In the event of a fault, refer to the interpretation of statuses **ET042 Cruise control/Speed limiter, ET556 Cruise control/ Speed limiter deactivation by driver and ET557 Cruise control/Speed limiter deactivation by function**.
		ET042: Cruise control/ speed limiter	**INACTIVE:** When no button is pressed.	In the event of a fault, refer to the interpretation of status **ET042**.
			CRUISE CONTROL: cruise control ON/OFF button pressed	Lights the green warning light on the instrument panel.
			LIMITER: speed limiter ON/OFF button pressed	Lights the orange warning light on the instrument panel.

GETtheMANUALS.org

NOTES	Only check conformity after a complete check using the diagnostic tool. The values shown in this conformity check are given as a guide. Test conditions: **Engine at idle speed, coolant temperature > 80°**.

CRUISE CONTROL/SPEED LIMITER (continued 1)

Order	Function	Parameter, Status checked or Action		Display and Notes	Fault finding
1	Cruise control/ speed limiter (continued)	**ET413:**	Cruise control/ speed limiter function	**INACTIVE:** When no button is pressed.	In the event of a fault, refer to the interpretation of statuses **ET042 Cruise control/Speed limiter, ET413 Cruise control/Speed limiter deactivation ET556 Cruise control/Speed limiter deactivation by driver and ET557 Cruise control/Speed limiter deactivation by function**.
				INCREASE: increase button pressed	
				DECREASE: decrease button pressed	
				CANCEL: "0" button pressed	
				REPEAT: R button pressed	
		ET556:	Driver deactivation of the cruise control/speed limiter Note: the cruise control can only be activated at a speed of V > 18 mph (30 km/h)	**STATUS 1:** Brake pedal depressed	The cruise control and speed limiter functions can be deactivated by various events. **IMPORTANT** Certain deactivations are stored; to reinitialise this status use **RZ007 Fault memory** In the event of a fault, refer to the interpretation of statuses **ET042 Cruise control/Speed limiter, ET413 Cruise control/Speed limiter deactivation ET556 Cruise control/Speed limiter deactivation by driver and ET557 Cruise control/Speed limiter deactivation by function**.
				STATUS 2: traction control request	
				STATUS 3: suspend button pressed	
				STATUS 4: clutch pedal depressed	
				STATUS 5: gear lever in neutral	
				STATUS 6: inconsistency between the request and the vehicle speed	
		ET557:	Deactivation by cruise control/ speed limiter function Note: the cruise control can only be activated at a speed of V > 18 mph (30 km/h)	**STATUS 1:** Cruise control or speed limiter fault	
				STATUS 2: fault detected by the injection computer	
				STATUS 3: vehicle speed invalid	

GETtheMANUALS.org

NOTES	Only check conformity after a complete check using the diagnostic tool. The values shown in this conformity check are given as a guide. Test conditions: **Engine at idle speed, coolant temperature > 80°**.

CRUISE CONTROL/SPEED LIMITER (continued 2)

Order	Function	Parameter, Status checked or Action		Display and Notes	Fault finding
2	Brake switch	**ET704:**	Brake contact no. 1	Brake pedal released **INACTIVE**	In the event of a fault, consult the interpretation of statuses **ET704 and ET705**.
		ET705:	Brake switch no. 2		
3	Clutch switch	**ET233:**	Clutch pedal	Brake pedal released **RELEASED**	In the event of a fault, consult the interpretation of **DF070 Clutch switch circuit**.

GETtheMANUALS.org

NOTES	Only check conformity after a complete check using the diagnostic tool. The values shown in this conformity check are given as a guide. Test conditions: **Engine at idle speed, coolant temperature > 80°**.

ENGINE COOLING

Order	Function	Parameter, Status checked or Action		Display and Notes	Fault finding
1	Coolant temperature	**PR064:**	Coolant temperature	Shows the engine coolant temperature in °C **Default value: 119 °C**	In the event of a fault, refer to the interpretation of **DF001 Coolant temperature sensor circuit**.
2	Fan assemblies	**ET143:**	Low speed fan assembly relay control	**ACTIVE if air conditioning request**	If the fan units are supplied with the ignition on, the injection may be in defect mode. Carry out a system fault test and refer to the interpretation of faults.
		ET144:	Low speed fan assembly relay control	**INACTIVE**	
		ET014:	Check cooling fan 1	**RUNNING if air conditioning requested**	
		ET015:	Monitor cooling fan 2	**STOPPED**	
3	Sensor feed	**PR084:**	Coolant temperature sensor voltage	**1 < X < 2 V** **Safe value: 5 V**	In the event of a fault, refer to the interpretation of **DF001 Coolant temperature sensor circuit**.

GETtheMANUALS.org

NOTES	Only check conformity after a complete check using the diagnostic tool. The values shown in this conformity check are given as a guide. Test conditions: **Engine at idle speed, coolant temperature > 80°**.

IGNITION/PREHEATING

Order	Function	Parameter, Status checked or Action		Display and Notes	Fault finding
6	Power supply	**ET001:**	Computer + after ignition feed	**PRESENT**	In the event of a fault, carry out a fault finding procedure on the charge circuit.
7	Engine	**ET038:**	Engine	**RUNNING**	None
		PR055:	Engine speed	Gives the engine speed of rotation in rpm	In the event of a fault, refer to the interpretation for fault **DF005 Engine speed sensor circuit**.
8	Temperature	**PR058:**	Air temperature	Indicates the inlet air temperature in °C **Default value: 20 °C**	In the event of a fault, refer to the interpretation of fault **DF039 Inlet air temperature sensor circuit**
		PR064:	Coolant temperature	Shows the engine coolant temperature in °C **Default value: 119 °C**	In the event of a fault, refer to the interpretation of **DF001 Coolant temperature sensor circuit**.
9	Preheating	**ET007:**	Preheating unit control	**Status ET007 is ACTIVE a few seconds after the ignition is switched on and for the postheating**	In the event of a fault, (**ET007** locked in ACTIVE), refer to the interpretation of fault **DF017 Preheating unit control circuit**.
10	Power supply	**PR071:**	Computer feed voltage	**9 V < voltage < 16 V**	In the event of a fault, consult the interpretation of fault **DF047 computer supply voltage**.

GETtheMANUALS.org

NOTES	Only check conformity after a complete check using the diagnostic tool. The values shown in this conformity check are given as a guide. Test conditions: **Engine at idle speed, coolant temperature > 80°**.

STARTING

Order	Function	Parameter, Status checked or Action		Display and Notes	Fault finding
5	Power supply	**ET001:**	Computer + after ignition feed	**PRESENT**	In the event of a fault, carry out a fault finding procedure on the charge circuit.
6	Starting	**ET238:**	Synchronisation	**COMPLETED**	In the event of a fault, refer to fault interpretation **DF195 Camshaft/engine speed sensor consistency**.
		ET076:	Starting	**AUTHORISED**	If status **ET076 is PROHIBITED**, carry out a complete fault finding procedure on the multiplex network.
7	Engine operation.	**ET038:**	Engine	**RUNNING**	None
8	Power supply	**PR071:**	Computer feed voltage	**9 V < voltage < 16 V**	In the event of a fault, consult the interpretation of fault **DF047 Computer supply voltage**.
		PR358:	Sensor reference voltage	**3.4 V < voltage < 3.8 V**	None

GETtheMANUALS.org

NOTES	Only check conformity after a complete check using the diagnostic tool. The values shown in this conformity check are given as a guide. Test conditions: **Engine at idle speed, coolant temperature > 80°**.

PROTECTION

Order	Function	Parameter, Status checked or Action	Display and Notes	Fault finding
4	Engine immobiliser	**ET341:** Immobiliser code programmed	**YES**	If status ET341 is locked on NO (**see 87B, Passenger compartment connection unit**).
		ET003: Engine immobiliser	**INACTIVE**	If status ET003 is locked on ACTIVE (see **87B, Passenger compartment connection unit**).
5	Vehicle impact	**ET077:** Impact detected	**NO**	In the event of a fault, refer to the interpretation of fault **DF069 Impact detected signal**.
6	starting	**ET076:** starting	**AUTHORISED: injection authorises starting**	If status ET076 is PROHIBITED (see **87B, Passenger compartment connection unit**).

GETtheMANUALS.org

Tool status	Diagnostic tool title
ET001	+ After ignition computer feed
ET003	Engine immobiliser
ET004	Air conditioning authorisation
ET007	Preheating unit control
ET014	Check cooling fan 1
ET015	Monitor cooling fan 2
ET038	Engine
ET042	Cruise control/speed limiter
ET076	Starting
ET077	Impact detected
ET078	Air regulation
ET088	Compressor actuation request
ET104	Injector code use
ET143	Low speed fan assembly relay control
ET144	High-speed fan assembly relay control
ET205	Heating element no. 1 relay control
ET206	Heating element no. 2 relay control
ET207	Heating element no. 3 relay control
ET233	Clutch pedal
ET238	Synchronisation
ET341	Immobiliser code programmed
ET413	Cruise control/speed limiter function
ET556	Driver deactivation of the cruise control/speed limiter
ET557	Deactivation by cruise control/speed limiter function
ET587	Cooling of recirculated exhaust gas
ET612	Dynamic Regeneration
ET651	EGR programming cut-off
ET704	Brake switch No. 1
ET705	Brake switch no. 2

GETtheMANUALS.org

Tool status	Diagnostic tool title
ET706	Stored engine status no. 1
ET707	Stored engine status no. 2
ET708	Stored engine status no. 3
ET709	Stored engine status no. 4
ET710	Stored engine status no. 5
ET711	Stored engine status no. 6
ET712	Stored engine status no. 7
ET713	Stored engine status no. 8
ET714	Stored engine status no. 9
ET715	Stored engine status no. 10
ET742	Stored regeneration request status No. 1
ET743	Stored regeneration request status No. 2
ET744	Stored regeneration request status No. 3
ET745	Stored regeneration request status No. 4
ET746	Stored regeneration request status No. 5
ET747	Stored regeneration request status No. 6
ET748	Stored regeneration request status No. 7
ET749	Stored regeneration request status No. 8
ET750	Stored regeneration request status No. 9
ET751	Stored regeneration request status No. 10

GETtheMANUALS.org

ET001	COMPUTER + AFTER IGNITION FEED

NOTES	**Special note:** Only apply the checks if the ABSENT and PRESENT statuses are not consistent with the system operating strategies.

ABSENT	***NOTES***	Ignition on

Check the condition and conformity of the **FM6 (10A)** supply fuse.
Repair if necessary

Check for the presence of an earth on the following connections:
Injection computer black 32-track connector A, **Track G4** ⟶ **battery earth**
Injection computer black 32-track connector A, **Track H4** ⟶ **battery earth**
Injection computer black 32-track connector A, **Track H1** ⟶ **battery earth**
Repair if necessary.
Check for **+ 12 V** on track **D1** of connector A of the injection computer.
If there is no voltage, check the continuity and insulation to **earth** of the following connection:
Injection computer black 32-track connector A, Track **D1** ⟶ **+ 12 V after ignition**
Repair if necessary.

PRESENT	***NOTES***	Ignition on

Normal operating conditions.
Check that the **+ 12 V ignition feed** is not there when the ignition is switched off.
Repair if necessary.

AFTER REPAIR	Carry out a road test followed by another check with the diagnostic tool.

GETtheMANUALS.org

ET003	ENGINE IMMOBILISER

NOTES	**Special note:** Only perform the tests if the statuses do not correspond with the system programming functions.

ACTIVE	***NOTES***	If status **ET003** is stuck at **ACTIVE**, refer to the UCH fault finding note.

INACTIVE	***NOTES***	When the ignition is switched on, and when driving, status **ET003** should be **INACTIVE**. If not, refer to the refer to the UCH fault finding note.

AFTER REPAIR	Carry out a road test followed by another check with the diagnostic tool.

GETtheMANUALS.org

ET004	AC AUTHORISED

NOTES	**Special note:** Only perform the tests if the statuses do not correspond with the system programming functions.

YES	The air conditioning authorisation only changes to **YES** if: – the air conditioning request has been made by the driver (air conditioning switch in **AC** or **AUTO** position with minimum ventilation), – the engine is not under full load, – the air conditioning system is not faulty.

NO	Status **ET004** remains at **NO** under the following conditions: – Vehicle stopped with the ignition on, – faults present in the air conditioning circuit, – no air conditioning request made by the driver, – engine under full load. If status **ET004** remains **NO** then the air conditioning should be authorised, check: – that the air conditioning compressor is activated correctly, – the air conditioning system feed fuses, – the presence of refrigerant in the air conditioning circuit, – that the refrigerant fluid pressure value is consistent at idle speed. If the fault is still present, check the air conditioning computer for faults (see **62A, Air conditioning**).

AFTER REPAIR	Carry out a road test followed by another check with the diagnostic tool.

GETtheMANUALS.org

ET007	PRE-POSTHEATING UNIT CONTROL

NOTES	**Special note:** Only perform these tests if the statuses do not correspond with the system programming functions.

YES	When the vehicle is started from cold, the injection computer controls the pre-postheating unit so that the vehicle can be started. Status **ET007** becomes **YES** a few seconds after the ignition is switched on and during pre/postheating. If the vehicle does not start and status **ET007** becomes **YES**, check: – the **F2 (70A)** supply fuse on the preheating unit, – the resistance of the heater plugs. Replace any heater plug whose resistance is not approximately 0.6 Ω. If the vehicle starts and status **ET007** remains **YES** during the engine operating phase, refer to the interpretation of faults: – **DF017 Preheating unit control circuit.** – **DF025 Pre-postheating unit diagnostic connection.**
NO	After the engine is started and the preheating phase, the injection computer should stop the pre-postheating unit operating. Status **ET007** should become **NO**. In the event that the vehicle does not start and status **ET007** remains **NO**, check the continuity and absence of interference resistance of the following connections: Injection computer **grey 32-track connector C, Track A4** ⟶ **Track 9** preheating unit Injection computer **grey 32-track connector C, Track E2** ⟶ **Track 8** preheating unit Repair if necessary. If the fault is still present, refer to the interpretation of faults: – **DF017 Preheating unit control circuit.** – **DF025 Pre-postheating unit diagnostic connection.**

AFTER REPAIR	Carry out a road test followed by another check with the diagnostic tool.

GETtheMANUALS.org

ET014	CHECK COOLING FAN 1

NOTES	**Special note:** **Only perform these tests if the statuses do not correspond with the system programming functions.**

Note:
Status ET014 Cooling fan 1 check and status ET143 Low speed fan unit relay control change their status at the same time.

RUNNING	The low-speed engine fan is supplied in three scenarios: – the engine coolant temperature is above **89°C**, – **the air conditioning is operating,** – the injection computer has system faults that could lead to the engine overheating. When the low-speed fan assembly is supplied: – status **ET014** becomes **RUNNING** – status **ET143 Low speed fan unit relay control** becomes **ACTIVE**.
	If the low-speed fan unit does not operate, refer to the test for status **ET413 Low speed fan unit control**.
STOPPED	The low-speed fan assembly stops when: – the engine coolant temperature is below **89°C**, – the air conditioning is not switched on by the driver.

AFTER REPAIR	Carry out a road test followed by another check with the diagnostic tool.

GETtheMANUALS.org

ET015	CHECK COOLING FAN 2

NOTES	**Special note:** **Only perform these tests if the statuses do not correspond with the system programming functions.**

Note:
Statuses ET015 Cooling fan 2 check and ET144 High speed fan unit relay control change their status at the same time.

RUNNING	The engine fan assembly can be supplied when: – the engine coolant temperature is above **99°C**. – the injection computer has system faults that could lead to the engine overheating. When the low-speed fan assembly is supplied: – status **ET015** becomes **RUNNING**, – status **ET144 High speed fan control relay** becomes **ACTIVE**.
	If the high-speed fan unit does not operate, refer to the test for status **ET144 High-speed fan unit relay control**.
STOPPED	The low-speed fan assembly stops when: – the engine coolant temperature is below **99°C**;

AFTER REPAIR	Carry out a road test followed by another check with the diagnostic tool.

GETtheMANUALS.org

ET038	ENGINE
STOPPED	Status **ET038** is STOPPED if the engine ignition is on but there has been no starter operation.
STALLED	Status **ET038** is STALLED when the engine has stalled. The vehicle is still under + after ignition feed.
RUNNING	Status **ET038** is RUNNING if the engine has started.
STARTING	Status **ET038** is Starter when the engine is in its starting phase.

AFTER REPAIR	Carry out a road test followed by another check with the diagnostic tool.

GETtheMANUALS.org

ET042	CRUISE CONTROL/SPEED LIMITER

NOTES	**Special note:** Only perform these tests if the statuses do not correspond with the system programming functions.

CRUISE CONTROL

Status **ET042** becomes **CRUISE CONTROL** when the **cruise control activation button** is pressed. This button is situated on the instrument panel, or on the centre console of the vehicle.
A **green** instrument panel warning light comes on when status **ET042** is at **CRUISE CONTROL**.
If status **ET042** does not change to **CRUISE CONTROL**, check the **ON/OFF** button of the cruise control, and the condition of its connector.
Repair if necessary.
Check **for continuity and make sure there is no interference resistance** on the following connection:
Injection computer black 32-track connector C, **track A2** ⟶ Cruise control on/off button 6-track connector **track A3**
Repair if necessary.

SPEED LIMITER

Status **ET042** becomes **SPEED LIMITER** when the **speed limiter activation button** is pressed. This button is situated on the instrument panel, or on the centre console of the vehicle.
A **yellow** instrument panel warning light lights when status **ET042** is **SPEED LIMITING**.
If status **ET042** does not change to **SPEED LIMITER**, check the **ON/OFF** button of the speed limiter, and the condition of its connector.
Repair if necessary.
Check **for continuity and make sure there is no interference resistance** on the following connection:
Injection computer black 32-track connector A **track C3** ⟶ Cruise control on/off button 6-track connector **track B1**
Repair if necessary.

AFTER REPAIR	Carry out a road test followed by another check with the diagnostic tool.

GETtheMANUALS.org

ET076	STARTING

NOTES	**Special note:** Only perform the tests if the statuses do not correspond with the system programming functions.

AUTHORISED	Starting the vehicle is authorised when the UCH authorises starting. Status **ET076** changes to **AUTHORISED** if the vehicle cards are recognised and the engine immobiliser is inactive.
PROHIBITED	If the card is not recognised by the UCH, starting the vehicle is not authorised. Status **ET076** is **PROHIBITED** and the vehicle cannot be started. Carry out fault finding on the UCH and refer to the relevant fault finding note for the vehicle to deal with any faults.

AFTER REPAIR	Carry out a road test followed by another check with the diagnostic tool.

GETtheMANUALS.org

ET077	IMPACT DETECTED

NOTES	**Special note:** Only perform the tests if the statuses do not correspond with the system programming functions.

YES	If the vehicle has been involved in an accident, the injection computer receives the impact signal via the multiplex network and may switch off the ignition. Status **ET077** is **YES**. Switch off the ignition for 10 seconds, then switch it back on, so the engine can be restarted. After the repair, clear the faults (even if no fault is displayed). Carry out a multiplex network test and deal with any faults.
NO	Under normal operating conditions, status **ET077** is **NO** when the computer has received no impact signal.

AFTER REPAIR	Carry out a road test followed by another check with the diagnostic tool.

GETtheMANUALS.org

ET088	REQUEST TO START COMPRESSOR
ACTIVE	The air conditioning request has been made by the driver when pressing one of the air conditioning controls (Auto or AC). Status **ET088 becomes ACTIVE** and the computer authorises or does not authorise air conditioning depending on the operating conditions. If status **ET088** does not become **ACTIVE** after the control button is operated, consult the vehicle's associated air conditioning fault finding note.
INACTIVE	When the driver deactivates the air conditioning, status **ET088** must become **INACTIVE**. If it does not, consult the vehicle's associated air conditioning fault finding note.

AFTER REPAIR	Carry out a road test followed by another check with the diagnostic tool.

GETtheMANUALS.org

ET104	INJECTOR CODE USE

NOTES	**Special note:** Only perform these tests if the statuses do not correspond with the system programming functions.

YES	When injector code programming is complete, status **ET104 Injector code operation** changes to **YES**.
NO	– If status **ET104 Injector code operation** is **NO**, program the injector codes using: either command **SC002 Enter injector codes** or command **SC001 Enter saved data** when **replacing with a blank computer or after reprogramming** (Consult the procedures defined in the **Interpretation of commands** section).
FAULTY	– If status **ET104 Injector code operation** is **NO**, program the injector codes using: either command **SC002 Enter injector codes** or command **SC001 Enter saved data** when **replacing with a blank computer or after reprogramming** (see the procedures defined in the **Interpretation of commands** section).

AFTER REPAIR	Carry out a road test followed by another check with the diagnostic tool.

GETtheMANUALS.org

ET122 **ET123**	BRAKE CONTACT SIGNAL No. 1 BRAKE CONTACT No. 2 SIGNAL

NOTES	**Special note:** **Only perform the tests if the statuses do not correspond with the system programming functions.**

Note:
Statuses ET122 and ET123 should change statuses at the same time. In the event of inconsistency, refer to the interpretation of fault DF050 Brake switch circuit.

***IMPORTANT:**
Two types of switch are used. Only the track assignments are different:
The first type uses tracks A1, B3, A3 and B1,
The second uses tracks 1, 2, 3 and 4.

INACTIVE
(Brake pedal depressed)

If the brake lights are working:
– check the continuity and make sure there is no interference resistance on the following connection:
Injection computer black 32-track **connector A track E4** ⟶ **Track 3 or A3***
Brake pedal switch
Repair if necessary.
If the brake lights are not operational, check:
– the condition and fitting of the brake switch,
– the condition and conformity of fuse 1H (15A),
– the conformity of the values in the following table:

	Continuity between tracks	**Insulation between tracks**
Switch pressed (Brake pedal released)	**3 and 4 or A3 and B1**	**1 and 2 or A1 and B3**
Switch released (Brake pedal depressed)	**1 and 2 or A1 and B3**	**3 and 4 or A3 and B1**

Replace the switch if the values obtained are not correct.

AFTER REPAIR	Carry out a road test followed by another check with the diagnostic tool.

EDC16_V08_ET122/EDC16_V10_ET122/EDC16_V14_ET122/EDC16_V08_ET123/EDC16_V10_ET123/EDC16_V14_ET123

GETtheMANUALS.org

ET122 **ET123** **CONTINUED**	

***IMPORTANT:**
Two types of switch are used. Only the track assignments are different:
The first type uses tracks A1, B3, A3 and B1,
The second uses tracks 1, 2, 3 and 4.

ACTIVE
(brake pedal released)

If the brake lights are working:
– check the continuity and make sure there is no interference resistance on the following connection:
Injection computer black 32-track **connector A track E4** ⟶ **Track 3 or A3***
Brake pedal switch
Repair if necessary.
If the brake lights are not working.
check the condition and fitting of the brake light switch and brake light fuse,
remove the brake light switch and check that it is operating correctly:

	Continuity between tracks	**Insulation between tracks**
Switch pressed (Brake pedal released)	**3 and 4 or A3 and B1**	**1 and 2 or A1 and B3**
Switch released (Brake pedal depressed)	**1 and 2 or A1 and B3**	**3 and 4 or A3 and B1**

Replace the switch if the values obtained are not correct.

AFTER REPAIR	Carry out a road test followed by another check with the diagnostic tool.

GETtheMANUALS.org

ET143	LOW-SPEED FAN ASSEMBLY RELAY CONTROL

NOTES	**Special note:** **Only perform these tests if the statuses do not correspond with the system programming functions.**

Note:
Status ET014 Cooling fan 1 check and status ET143 Low speed fan unit relay control change their status at the same time.

ACTIVE	The injection computer requests the activation of the low speed GMV when: – the engine coolant temperature is above **89°C**, – the injection computer has system faults that could lead to the engine overheating, – the air conditioning is switched on by the driver. When the high speed fan is supplied: – status **ET143 Low speed fan unit relay control** becomes **ACTIVE**, – status **ET014** becomes **RUNNING**. If the low-speed fan unit does not operate (see interpretation of faults, DF176 low-speed fan unit circuit).
STOPPED	The low-speed fan assembly stops when: – the engine coolant temperature is below **89°C**, – **no fault which could cause engine overheating is present in the injection system.** – **the air conditioning is not switched on by the driver.**

AFTER REPAIR	Carry out a road test followed by another check with the diagnostic tool.

GETtheMANUALS.org

ET144	HIGH-SPEED FAN ASSEMBLY RELAY CONTROL

NOTES	**Special note:** **Only perform these tests if the statuses do not correspond with the system programming functions.**

Note:
Statuses ET015 Cooling fan 2 check and ET144 High speed fan unit relay control change their status at the same time.

RUNNING	The injection computer requests the activation of the high speed GMV when: – the engine coolant temperature is above **99°C**. – the injection computer has system faults that could lead to the engine overheating. When the high speed fan is supplied: – status **ET144 High speed fan unit relay control** becomes **ACTIVE**, – status **ET015** becomes **RUNNING**. If the high-speed fan unit does not operate (see interpretation of faults, DF177 High-speed fan unit circuit).
STOPPED	The high-speed fan assembly stops when: – the engine coolant temperature is below **99°C**; – **no fault which could cause engine overheating is present in the injection system.**

AFTER REPAIR	Carry out a road test followed by another check with the diagnostic tool.

GETtheMANUALS.org

ET205 **ET206** **ET207**	THERMOPLUNGER No. 1, 2, 3 RELAY CONTROL

INACTIVE	Statuses **ET205, ET206, ET207** are **INACTIVE** when the ignition is on and the engine stopped, or when the engine is warm.

ACTIVE	Statuses **ET205, ET206, ET207** are **ACTIVE** when: – the engine has been started, – and the engine coolant temperature is low (**< 15°**), – and the air temperature is low (**< 5°**). This program allows the engine coolant to be heated and to enable the passenger compartment to be heated. To control the operation of the thermoplunger relays, run the following commands: **AC063 Heating element no. 1 relay** **AC064 Heating element no. 2 relay** **AC031 Heating element no. 3 relay** In the event of a fault, refer to the interpretation of faults: **DF238 Thermoplunger no. 3 relay circuit** **DF239 Thermoplunger no. 2 relay circuit** **DF240 Thermoplunger no. 1 relay circuit**

AFTER REPAIR	Carry out a road test followed by another check with the diagnostic tool.

EDC16_V08_ET205/EDC16_V10_ET205/EDC16_V14_ET205/
EDC16_V08_ET206/EDC16_V10_ET206/EDC16_V14_ET206/
EDC16_V08_ET207/EDC16_V10_ET207/EDC16_V14_ET207

GETtheMANUALS.org

ET233	CLUTCH PEDAL

NOTES	**Special note:** Only perform these tests if the statuses do not correspond with the system programming functions.

***IMPORTANT:**
Two types of switch are used. Only the allocation of tracks is different:
The first type uses tracks A1 and B3,
The second uses tracks 1 and 2.

RELEASED and clutch pedal depressed

Check the condition and fitting of the clutch pedal switch.
Check the continuity and absence of interference resistance on the following connection:
Injection computer black 32-track connector A **track C4** ⟶ **Track 2 or A1***
Clutch switch
Check the presence of earth on track 1 or B3* of the clutch switch connector. Repair if necessary.
Remove the clutch pedal switch and check that it is functioning correctly.

	Continuity between tracks	**Insulation between tracks**
Switch pressed (Brake pedal released)	**1 and 2 or A1 and B3***	
Switch released (Brake pedal depressed)		**1 and 2 or A1 and B3***

Replace the clutch pedal switch if necessary.

DEPRESSED and clutch pedal released

Check the condition and fitting of the clutch pedal switch.
Remove the clutch pedal switch and check that it is functioning correctly.

	Continuity between tracks	**Insulation between tracks**
Switch pressed (Brake pedal released)	**1 and 2 or A1 and B3***	
Switch released (Brake pedal depressed)		**1 and 2 or A1 and B3***

Replace the switch if necessary.

AFTER REPAIR	Carry out a road test followed by another check with the diagnostic tool.

GETtheMANUALS.org

ET238	SYNCHRONISATION

NOTES	**Special note:** Only perform the tests if the statuses do not correspond with the system programming functions.

WARNING
Synchronisation is carried out during the engine starting phase. This is established between the camshaft position sensor and the TDC sensor.
Once this synchronisation has been carried out, it enables the computer to identify cylinder no. 1 and to calculate the precise position of the cylinder's Top Dead Centre.

NOT PERFORMED	When the engine is stopped but the ignition switched on, cylinder no. 1 is no longer indicated. Status **ET238** is **NOT DONE**; synchronisation between the crankshaft and the camshaft has not been carried out.
COMPLETED	Synchronisation is carried out during the engine starting phase. Cylinder No. 1 is indicated and synchronisation will be performed once the engine is started. Status **ET238** is **COMPLETED**. If after several attempts to start the engine status **ET238** remains **INACTIVE**, refer to the interpretation of the following faults: – **DF005 Engine speed sensor circuit.** – **DF097 Camshaft sensor circuit.** If the engine does not start, refer to **ALP 2 Starting faults** (see **Customer complaints**).

AFTER REPAIR	Carry out a road test followed by another check with the diagnostic tool.

GETtheMANUALS.org

ET341	IMMOBILISER CODE PROGRAMMED

NOTES	**Special note:** Only perform the tests if the statuses do not correspond with the system programming functions.

YES	Status **ET341** becomes YES if there is dialogue between the UCH and the injection computer and the card code is recognised. Engine starting authorisation is only given if the code is recognised by the UCH computer, and status **ET003 Engine immobiliser** is **INACTIVE**.
NO	The code remains **NO** if dialogue between the UCH and the injection computer is not possible. Status **ET003 Engine immobiliser** is **ACTIVE**. The cause of the fault may be incorrect card programming (in this case refer to the fault finding note and follow the UCH card programming procedure). If it is not caused by the card codes, carry out a multiplex network test (if the previous fault finding check was by function), and check that dialogue is established between the UCH and the injection computer. If dialogue is not established, contact the Techline.

AFTER REPAIR	Carry out a road test followed by another check with the diagnostic tool.

GETtheMANUALS.org

ET413	CRUISE CONTROL/SPEED LIMITER FUNCTION

NOTES	**Special notes:** Only perform these tests if the statuses do not correspond with the system programming functions.

INCREASE

Status **ET413** becomes INCREASE when the cruise control **+** button is pressed. This button is situated to the left of the steering wheel.
If status **ET413** does not become INCREASE, check the condition of the ± cruise control button and its connector. Repair if necessary.
To be able to remove the driver's airbag and carry out the measurements in complete safety (see 88C, Airbag and pretensioners).
Repair if necessary.
Measure **the resistance of the following connection, after pressing the "+" button**:
Injection computer black 32 track connector A **track D2** ⟶ **"±" button Track 2**
Injection computer black 32 track connector A **track D3** ⟶ **"±" button Track 1**
If the resistance is not approximately **300** Ω, check the continuity of the connection when the button is not pressed.
If there is continuity, replace the **+/-** control button.
If the connection is broken, repair it.

DECREASE

Status **ET413** becomes DECREASE when the **-** button for the cruise control is pressed. This button is situated to the left of the steering wheel.
If status **ET413** does not become DECREASE, check the condition of the ± cruise control button and its connector.
Repair if necessary.
To be able to remove the driver's airbag and carry out the measurements in complete safety (see 88C, Airbag and pretensioners).
Repair if necessary.
Measure the **resistance of the following connection, after pressing the - button**:
Injection computer black 32 track connector A **track D2** ⟶ **"±" button Track 2**
Injection computer black 32 track connector A **track D3** ⟶ **"±" button Track 1**
If the resistance is not approximately **100** Ω, check the continuity of the connection when the button is not pressed.
If there is continuity, replace the ± control button.
If the connection is broken, repair it.

AFTER REPAIR	Carry out a road test followed by another check with the diagnostic tool.

GETtheMANUALS.org

ET413 CONTINUED	

SUSPEND	Status **ET413** becomes CANCEL when the **0** cruise control button is pressed. This button is situated to the right of the steering wheel. If status **ET413** does not change to SUSPEND, check the **R/0** button of the cruise control, and the condition of its connector. Repair if necessary. **To be able to remove the driver's airbag and carry out the measurements in complete safety (see 88C, Airbag and pretensioners).** Repair if necessary. Measure the **resistance of the following connection, after pressing the 0 button**: Injection computer black 32 track connector A **track D2** ⟶ **"R/0" button Track 2** Injection computer black 32 track connector A **track D3** ⟶ **"R/0" button Track 1** If the resistance is not approximately **0** Ω, replace the **R/0** control button. If the connection is broken, repair it.
RESUME	Status **ET413** becomes RESTART when the **R** cruise control button is pressed. This button is situated to the right of the steering wheel. If status **ET413** does not change to RESUME, check the **R/0** button of the cruise control, and the condition of its connector. Repair if necessary. **To be able to remove the driver's airbag and carry out the measurements in complete safety (see 88C, Airbag and pretensioners).** Repair if necessary. Measure the **resistance of the following connection, after pressing the R button**: Injection computer black 32 track connector A **track D2** ⟶ **"R/0" button Track 2** Injection computer black 32 track connector A **track D3** ⟶ **"R/0" button Track 1** If the resistance is not approximately **900** Ω, check the continuity of the connection when the button is not pressed. If there is continuity, then replace the **R/0** control button. If the connection is broken, repair it.

AFTER REPAIR	Carry out a road test followed by another check with the diagnostic tool.

GETtheMANUALS.org

ET556	DRIVER'S DEACTIVATION OF THE CRUISE CONTROL/SPEED LIMITER

NOTES	**Special notes:** Apply the conformity check to see if the statuses are consistent with the operating programs of the system.

Note:
Cruise control can be activated when the vehicle speed exceeds **18 mph (30 km/h)**.
Status **ET556** details 6 causes for cruise control deactivation.
IMPORTANT
To reinitialise the deactivations stored by the injection computer, use command RZ007 Fault memory.

STATUS 1	**Brake pedal depressed**
	The cruise control function is deactivated each time the brake pedal is depressed. Status **ET556** becomes **STATUS 1**, when the vehicle is being driven, with cruise control active and the brake pedal depressed. If status **ET556** becomes **STATUS 1** without depressing the brake pedal, consult the interpretation of statuses **ET704** and **ET705 Brake contact no.1 and no. 2.**

STATUS 2	**Traction control request**
	If the vehicle being diagnosed is fitted with traction control, the cruise control function is deactivated each time traction control is selected. Status **ET556** changes to **STATUS 2**, when driving, with cruise control active and traction control requested. If status **ET556** becomes **STATUS 2** with no traction control request (see **38C, Anti-lock Braking System**).

STATUS 3	**Suspend button pressed**
	Status **ET556** changes to **STATUS 3** when driving with Cruise control/Speed limiter active, if the driver presses the Cruise control/Speed limiter **0** button. If status **ET556** becomes **STATUS 3** without button **0** on the Cruise control/Speed limiter being pressed, consult the interpretation of status **ET413 Cruise control/Speed limiter function** and run fault finding on the **R/0** control button of the Cruise control/Speed limiter.

AFTER REPAIR	Carry out a road test followed by another check with the diagnostic tool.

GETtheMANUALS.org

ET556 CONTINUED	

STATUS 4	**Clutch pedal depressed**
	MANUAL GEARBOX ONLY The cruise control function is deactivated if the gearbox is no longer coupled to the engine (clutch pedal depressed). Status **ET556** becomes **STATUS 4** when driving, with cruise control active and the clutch pedal depressed. If status **ET556** becomes **STATUS 4** without the clutch pedal being depressed, consult the interpretation of status **ET233 Clutch pedal**.

STATUS 5	**Gear lever in neutral position**
	Status **ET556** changes to **STATUS 5**, when driving, with cruise control active and – if the driver puts the gear lever in neutral on a manual gearbox without declutching or, – if gear lever is in neutral on an automatic transmission. This deactivates cruise control. If status **ET556** becomes **STATUS 5** without putting the gear lever in neutral on a manual gearbox without declutching, or without neutral on an automatic transmission, contact the Techline.

STATUS 6	**Lack of correlation between the request and the vehicle speed**
	Status **ET556** changes to **STATUS 6** if the computer detects too great a difference between the speed requested by the driver and the vehicle speed. This may occur when driving, with cruise control active and where the difference between speeds is great. If status **ET556** changes to **STATUS 6** without a great difference in the speeds, contact the Techline.

AFTER REPAIR	Carry out a road test followed by another check with the diagnostic tool.

GETtheMANUALS.org

ET557	CRUISE CONTROL/SPEED LIMITER DEACTIVATION BY FUNCTION

NOTES	**Special notes:** Only perform these tests if the statuses do not correspond with the system programming functions.

Note:
Cruise control remains deactivated as long as the vehicle speed does not exceed **18 mph (30 km/h)**. Status **ET557** gives 3 causes of cruise control deactivation.
IMPORTANT
To reinitialise the deactivations stored by the injection computer, use command RZ007 Fault memory.

STATUS 1	**Cruise control or speed limiter fault**
	If status **ET557** is **STATUS 1**, refer to the interpretation of status **ET042 Cruise control/ speed limiter** and **ET413 Cruise control/speed limiter function**, to test the components of the cruise control system and find the faulty one. If status **ET557** changes to **STATUS 1**, deal with the faults present or stored in the computer. If the fault is still present, contact the Techline.

STATUS 2	**Fault detected by the injection computer**
	Status **ET557** changes to **STATUS 2** if the injection computer detects a fault on the injection system: – **faults in the engine speed sensor or camshaft,** – **accelerator pedal faults,** – **engine speed lower than 1000 rpm,** – **engine speed greater than 4700 rpm.** Carry out a multiplex network test, then an injection system test, and carry out fault finding on any faults. If the fault is still present, contact the Techline.

STATUS 3	**Invalid vehicle speed**
	Status **ET557** changes to **STATUS 3** if the vehicle speed received by the computer is invalid. Carry out fault finding on the **ABS** computer. If faults are present (see **38C, Anti-lock braking system**). If the fault is still present, contact the Techline.

AFTER REPAIR	Carry out a road test followed by another check with the diagnostic tool.

GETtheMANUALS.org

ET651	EGR PROGRAMMING CUT-OFF

NOTES	**Special notes:** Only perform these tests if the status does not correspond with the system programming functions.

NONE	**No EGR cut-off, the EGR valve is working properly in accordance with the computer programs.**
STATUS 1, 5, 6, 7, 9, 10, 12, 13, 15, 19 23, 24	Switch off the engine and wait for the following message to appear on the **diagnostic tool: Loss of dialogue with the computer: EDC16 C3, check the connection of the tool and the computer supply voltage.** Switch the ignition on and check for faults. Check the engine battery voltage with the engine switched off and the engine running. If no faults are present or stored, restart the vehicle and test at idle speed. **Do not accelerate too much or attain an engine speed that is too high.**
STATUS 3, 14, 16	Accelerate above idling speed for a few seconds.
STATUS 2	Check that the clutch pedal (**ET233 Clutch pedal**) is not depressed, and that the vehicle is completely stopped.
STATUS 4, 17	Check for present and stored faults, and repair.
STATUS 8	Reset the EGR offsets by referring to the interpretation of command **SC036 Reset programming** and select **EGR valve**.
STATUS 11, 22	Allow the engine to heat up until this cut-off disappears.
STATUS 18	Check that the regeneration of the particle filter in progress has completely finished.
STATUS 20	Allow the engine to cool until this cut-off disappears.
STATUS 21	Too low atmospheric pressure, the EGR valve is disabled.

AFTER REPAIR	Carry out a road test followed by another check with the diagnostic tool.

GETtheMANUALS.org

ET704 **ET705**	BRAKE SWITCH NO. 1 BRAKE SWITCH NO. 2

NOTES	**Special note:** Only perform the tests if the statuses do not correspond with the system programming functions.

Note:
Statuses **ET704 and ET705** should change status at the same time. In the event of inconsistency, refer to the interpretation of fault **DF050 Brake switch circuit**.

AFTER REPAIR	Carry out a road test followed by a **complete check** with the **diagnostic too**l.

GETtheMANUALS.org

ET704 **ET705** **CONTINUED**	

ACTIVE
or
INACTIVE

If the brake lights are working:
check the continuity and make sure there is no interference resistance on the following connection:
– Connection code **5A between components 160 and 120/645/119**.
If there is a repair procedure (see **Technical Note 6015A, Electrical wiring repair, Wiring: Precautions for repair**), repair the wiring, otherwise replace the wiring.
If the brake lights are not operational, check:
– the condition and fitting of the brake switch,
– the condition and conformity of the brake light fuse,
– the conformity of the values in the following table:
disconnect the switch and carry out the following checks:

For Vel satis without ESP

	Continuity between connections	Insulation between connections
Switch pressed (Brake pedal released)	**5A and SP13**	**65G and AP10**
Switch released (Brake pedal depressed)	**65G and AP10**	**5A and SP13**

For Vel satis with ESP

	Continuity between connections	Insulation between connections
Switch pressed (Brake pedal released)	**5A and SP13**	**65A and AP10**
Switch released (Brake pedal depressed)	**65A and AP10**	**5A and SP13**

For Laguna II

	Continuity between connections	Insulation between connections
Switch pressed (Brake pedal released)	**5A and SP13**	**65A and AP10**
Switch released (Brake pedal depressed)	**65A and AP10**	**5A and SP13**

AFTER REPAIR	Carry out a road test followed by a **complete check** with the **diagnostic too**l.

GETtheMANUALS.org

ET706 **ET707** **ET708** **ET709** **ET710** **ET711** **ET712** **ET713** **ET714** **ET715**	STORED ENGINE STATUS NO. 1 STORED ENGINE STATUS NO. 2 STORED ENGINE STATUS NO. 3 STORED ENGINE STATUS NO. 4 STORED ENGINE STATUS NO. 5 STORED ENGINE STATUS NO. 6 STORED ENGINE STATUS NO. 7 STORED ENGINE STATUS NO. 8 STORED ENGINE STATUS NO. 9 STORED ENGINE STATUS NO. 10

NOTES	**Special note:** Interpret these parameters only for **DF312 Speed request** if it is present or stored.

Each **STATUS** between **ET706** and **ET715** corresponds to the engine status during a regeneration failure for which the mileage is saved by **PR794 Saved regeneration failure no. 1 to PR803 Saved regeneration failure no. 10** (for example, **PR797 Saved regeneration failure no. 4 is related to ET709 Saved engine status no. 4**).

"RUNNING"	If the **STATUS** is **RUNNING**, the regeneration failed because: – the customer's driving did not generate enough heat, – an engine management system component is faulty.

"STOPPED"	If the **STATUS** is **STOPPED**, regeneration has failed due to engine cut-off.

+ APC	POWER LATCH

"NONE"	No failed regeneration is present.

AFTER REPAIR	Carry out a road test followed by a complete check with the **diagnostic tool**.

EDC16_V08_ET706/EDC16_V08_ET707/EDC16_V08_ET708/EDC16_V08_ET709/
EDC16_V08_ET710/EDC16_V08_ET711/EDC16_V08_ET712/EDC16_V08_ET713/
EDC16_V08_ET714/EDC16_V08_ET715/EDC16_V10_ET706/EDC16_V10_ET707/
EDC16_V10_ET708/EDC16_V10_ET709/EDC16_V10_ET710/EDC16_V10_ET711/
EDC16_V10_ET712/EDC16_V10_ET713/EDC16_V10_ET714/EDC16_V10_ET715/
EDC16_V14_ET706/EDC16_V14_ET707/EDC16_V14_ET708/EDC16_V14_ET709/
EDC16_V14_ET710/EDC16_V14_ET711/EDC16_V14_ET712/EDC16_V14_ET713/
EDC16_V14_ET714/EDC16_V14_ET715

GETtheMANUALS.org

ET742 **ET743** **ET744** **ET745** **ET746** **ET747** **ET748** **ET749** **ET750** **ET751**	STORED REGEN. REQUEST STATUS No. 1 STORED REGEN. REQUEST STATUS No. 2 STORED REGEN. REQUEST STATUS No. 3 STORED REGEN. REQUEST STATUS No. 4 STORED REGEN. REQUEST STATUS No. 5 STORED REGEN. REQUEST STATUS No. 6 STORED REGEN. REQUEST STATUS No. 7 STORED REGEN. REQUEST STATUS No. 8 STORED REGEN. REQUEST STATUS No. 9 STORED REGEN. REQUEST STATUS No. 10

NOTES	**Special note:** These statuses are to be interpreted only for **ALP8 Particle filter warning light comes on too often**.

Statuses **ET742** to **ET751** correspond to the causes for the regeneration request. They are associated with the parameters **PR816 Stored regeneration start no.1** to **PR825 Stored regeneration restart no. 10** which contain the record of the vehicle mileage at the start of regeneration (e.g. **PR745 Stored regeneration start no. 4** is associated with **ET709 Stored regeneration request status no. 4**).

STATUS 1	**Request by weight of soot** Regeneration has been requested following measurement of the maximum weight of soot in the particle filter, without the particle filter warning light coming on.
STATUS 2	**Request by estimated weight of soot** Regeneration has been requested following an estimate of the maximum weight of soot in the particle filter, without the particle filter warning light coming on.
STATUS 3	**Request by distance travelled** Regeneration has been requested as the distance travelled since the last successful regeneration has reached the maximum authorised value (the particle filter warning light has not come on).
STATUS 4	**Request by number of failed regenerations or soot weight** This status corresponds to the appearance of **DF312 Speed request**. This corresponds to the maximum number of failed regenerations or to the maximum weight of soot in the particle filter, with the particle filter warning light coming on.

AFTER REPAIR	Carry out a road test followed by a complete check with the **diagnostic tool**.

EDC16_V08_ET742/EDC16_V08_ET743/EDC16_V08_ET744/EDC16_V08_ET745/
EDC16_V08_ET746/EDC16_V08_ET747/EDC16_V08_ET748/EDC16_V08_ET749/
EDC16_V08_ET750/EDC16_V08_ET751/EDC16_V10_ET742/EDC16_V10_ET743/EDC16_V10_ET744/EDC16_V10_ET745/
EDC16_V10_ET746/EDC16_V10_ET747/EDC16_V10_ET748/EDC16_V10_ET749/EDC16_V10_ET750/EDC16_V10_ET751/
EDC16_V14_ET742/EDC16_V14_ET743/EDC16_V14_ET744/EDC16_V14_ET745/
EDC16_V14_ET746/EDC16_V14_ET747/EDC16_V14_ET748/EDC16_V14_ET749/
EDC16_V14_ET750/EDC16_V14_ET751

GETtheMANUALS.org

Tool parameter	Diagnostic tool title
PR005	EGR valve opening setpoint
PR006	Rail pressure regulator current
PR007	Rail pressure regulator current setpoint
PR008	Rail pressure setpoint
PR009	Turbocharging pressure setpoint
PR011	Turbocharging solenoid valve position correction
PR013	Swirl flap position correction (Except Velsatis ph2 Vdiag 14)
PR015	Engine torque
PR016	Alternator output (not present on Vdiag 08)
PR017	Fuel flow
PR022	EGR valve position feedback loop difference
PR024	Fuel pressure deviation (not present on Vdiag 08)
PR030	Accelerator pedal position
PR035	Atmospheric pressure
PR038	Rail pressure
PR041	Turbocharging pressure
PR046	EGR solenoid valve opening cycle ratio (not present on Vdiag 08)
PR047	Turbocharging pressure OCR
PR048	Rail pressure regulation valve OCR
PR049	Turbulence flap opening cycle ratio (only affects Vdiag 08)
PR051	EGR valve position feedback
PR053	Speed requested by air conditioning
PR055	Engine speed
PR058	Air temperature
PR063	Fuel temperature
PR064	Coolant temperature
PR071	Computer supply voltage
PR073	Air flowmeter feed voltage
PR076	Refrigerant sensor voltage (not present on Vdiag 08)

GETtheMANUALS.org

Tool parameter	Diagnostic tool title
PR077	EGR valve position sensor voltage
PR079	Atmospheric pressure sensor voltage
PR080	Rail pressure sensor voltage
PR082	Fuel pressure sensor voltage
PR083	Air temperature sensor voltage
PR084	Coolant temperature sensor voltage
PR089	Vehicle speed
PR125	Power absorbed by the air conditioning compressor (not present on Vdiag 08)
PR127	Heating resistor maximum authorised power (not present on Vdiag 08)
PR128	First EGR valve offset
PR129	Last EGR valve offset
PR130	Cruise control setpoint
PR131	EGR air flow variation
PR132	Air flow
PR146	Inlet air flow
PR147	Pedal potentiometer voltage gang 1
PR148	Pedal potentiometer voltage gang 2
PR157	Fuel flow setpoint
PR171	Air flow setpoint for EGR
PR190	Engine idle speed setpoint.
PR209	Turbocharging pressure loop difference
PR213	Rail pressure loop difference
PR220	EGR valve OCR*
PR358	Sensor reference voltage
PR364	Cylinder no. 1 fuel flow correction
PR365	Cylinder no. 4 fuel flow correction
PR381	Particle filter downstream temperature (Except VELSATIS ph2 Vdiag 14)
PR382	Particle filter upstream temperature

* OCR: Opening cycle ratio

GETtheMANUALS.org

Tool parameter	Diagnostic tool title
PR383	Weight of soot in the particle filter
PR384	Particle filter downstream pressure
PR385	Exhaust pipe flow
PR391	Mileage since particle filter replacement
PR401	Thermoplungers power request
PR403	Idle speed request by the thermoplungers
PR405	Cylinder no. 2 fuel flow correction
PR406	Cylinder no. 3 fuel flow correction
PR412	Mileage at last successful regeneration
PR414	Particle filter differential pressure
PR415	Time since last regeneration
PR417	Damper valve OCR*
PR420	Damper valve error counter
PR672	Damper valve position setpoint
PR784	DF312 recording No. 1
PR785	DF312 recording No. 2
PR786	DF312 recording No. 3
PR787	DF312 recording No. 4
PR788	DF312 recording No. 5
PR789	DF312 recording No. 6
PR790	DF312 recording No. 7
PR791	DF312 recording No. 8
PR792	DF312 recording No. 9
PR793	DF312 recording No. 10
PR794	Stored regeneration failure no. 1
PR795	Stored regeneration failure no. 2
PR796	Stored regeneration failure no. 3
PR797	Stored regeneration failure no. 4

*** OCR:** Opening Cyclic Ratio

GETtheMANUALS.org

Tool parameter	Diagnostic tool title
PR798	Stored regeneration failure no. 5
PR799	Stored regeneration failure no. 6
PR800	Stored regeneration failure no. 7
PR801	Stored regeneration failure no. 8
PR802	Stored regeneration failure no. 9
PR803	Stored regeneration failure no. 10
PR816	Stored regeneration start no. 1
PR817	Stored regeneration start no. 2
PR818	Stored regeneration start no. 3
PR819	Stored regeneration start no. 4
PR820	Stored regeneration start no. 5
PR821	Stored regeneration start no. 6
PR822	Stored regeneration start no. 7
PR823	Stored regeneration start no. 8
PR824	Stored regeneration start no. 9
PR825	Stored regeneration start no. 10
PR1012	Weight of soot after regeneration

GETtheMANUALS.org

Tool command	Diagnostic tool title
SC001	Write saved data
SC002	Enter injector codes
SC003	Save computer data
SC017	Particle filter regeneration
SC036	Reinitialise programming
RZ005	Programming
RZ007	Fault memory
LC009	Air conditioning
LC056	Heating elements
LC065	Water in diesel fuel sensor
LC120	Cruise control
LC121	Speed limiter
VP010	Enter VIN
VP036	Fuel supply inhibited
VP037	Lift fuel supply inhibition

GETtheMANUALS.org

Tool command	Diagnostic tool title
AC004	Turbocharging solenoid valve
AC012	Damper valve
AC013	Swirl flap
AC031	Heating element no. 3 relay
AC035	Fuel pressure solenoid valve
AC037	Preheating relay
AC038	Low speed GMV relay
AC039	High speed fan unit
AC063	Heating element no. 1 relay
AC064	Heating element no. 2 relay
AC103	EGR by-pass

GETtheMANUALS.org

PR784 **PR785** **PR786** **PR787** **PR788** **PR789** **PR790** **PR791** **PR792** **PR793**	DF312 RECORD No. 1 DF312 RECORD No. 2 DF312 RECORD No. 3 DF312 RECORD No. 4 DF312 RECORD No. 5 DF312 RECORD No. 6 DF312 RECORD No. 7 DF312 RECORD No. 8 DF312 RECORD No. 9 DF312 RECORD No. 10

NOTES	**Special note:** These parameters must only be interpreted for **DF312 Speed request** if it is present or stored.

These parameters can be used to find out the history of the last ten times the particle filter warning light has come on.

Each parameter from **PR784 to PR793** records the mileage when the particle filter warning light illuminates in association with **DF312 Speed request**.
Each time the particle filter warning light comes on, the vehicle mileage is stored in the following parameter (PR+1).

When all ten parameters have a value other than zero, and the particle filter warning light illuminates again, the mileage information for **PR784 DF312 record no. 1** is cleared and replaced by the new value.

AFTER REPAIR	Repeat the conformity check from the start.

EDC16_V08_PR784/EDC16_V08_PR785/EDC16_V08_PR786/EDC16_V08_PR787/
EDC16_V08_PR788/EDC16_V08_PR789/EDC16_V08_PR790/EDC16_V08_PR791/
EDC16_V08_PR792/EDC16_V08_PR793/EDC16_V10_PR784/EDC16_V10_PR785/
EDC16_V10_PR786/EDC16_V10_PR787/EDC16_V10_PR788/EDC16_V10_PR789/
EDC16_V10_PR790/EDC16_V10_PR791/EDC16_V10_PR792/EDC16_V10_PR793/
EDC16_V14_PR784/EDC16_V14_PR785/EDC16_V14_PR786/EDC16_V14_PR787/
EDC16_V14_PR788/EDC16_V14_PR789/EDC16_V14_PR790/EDC16_V14_PR791/
EDC16_V14_PR792/EDC16_V14_PR793

GETtheMANUALS.org

PR794 **PR795** **PR796** **PR797** **PR798** **PR799** **PR800** **PR801** **PR802** **PR803**	STORED REGENERATION FAILURE NO. 1 STORED REGENERATION FAILURE NO. 2 STORED REGENERATION FAILURE NO. 3 STORED REGENERATION FAILURE NO. 4 STORED REGENERATION FAILURE NO. 5 STORED REGENERATION FAILURE NO. 6 STORED REGENERATION FAILURE NO. 7 STORED REGENERATION FAILURE NO. 8 STORED REGENERATION FAILURE NO. 9 STORED REGENERATION FAILURE NO. 10

NOTES	**Special note:** These parameters must only be interpreted for **DF312 Speed request** if it is present or stored.

These parameters are used so that the history of the last ten failed regenerations when driving is known.

each of these parameters contains the vehicle mileage during a failed particle filter regeneration when driving. each parameter relates to an engine status. The statuses and parameters are recorded simultaneously (for example, **PR797 Stored regeneration failure no. 4 is associated with ET709 Stored engine status no. 4**).

Each new recorded value is saved under the next PR (PR+1).

When all ten parameters have a value other than zero, and a regeneration failure occurs when driving, the mileage information for **PR794 Stored regeneration failure no. 1** is cleared and replaced with the new value.

AFTER REPAIR	Repeat the conformity check from the start.

EDC16_V08_PR794/EDC16_V08_PR795/EDC16_V08_PR796/EDC16_V08_PR797/
EDC16_V08_PR798/EDC16_V08_PR799/EDC16_V08_PR800/EDC16_V08_PR801/
EDC16_V08_PR802/EDC16_V08_PR803/EDC16_V10_PR794/EDC16_V10_PR795/
EDC16_V10_PR796/EDC16_V10_PR797/EDC16_V10_PR798/EDC16_V10_PR799/
EDC16_V10_PR800/EDC16_V10_PR801/EDC16_V10_PR802/EDC16_V10_PR803/
EDC16_V14_PR794/EDC16_V14_PR795/EDC16_V14_PR796/EDC16_V14_PR797/
EDC16_V14_PR798/EDC16_V14_PR799/EDC16_V14_PR800/EDC16_V14_PR801/
EDC16_V14_PR802/EDC16_V14_PR803

GETtheMANUALS.org

PR816 **PR817** **PR818** **PR819** **PR820** **PR821** **PR822** **PR823** **PR824** **PR825**	STORED REGENERATION START NO. 1 STORED REGENERATION START NO. 2 STORED REGENERATION START NO. 3 STORED REGENERATION START NO. 4 STORED REGENERATION START NO. 5 STORED REGENERATION START NO. 6 STORED REGENERATION START NO. 7 STORED REGENERATION START NO. 8 STORED REGENERATION START NO. 9 STORED REGENERATION START NO. 10

NOTES	**Special note:** These parameters are to be interpreted only for **ALP 8 Particle filter warning light comes on too frequently**.

These parameters are used so that the history of the last ten regeneration starts when driving can be found.

Each parameter between **PR816** and **PR825** contains the vehicle mileage when particle filter regeneration starts when driving. Each parameter is associated with a status for "Stored regeneration request status". They are recorded simultaneously (for example **PR819 Stored regeneration start no. 4 is associated with ET745 Stored regeneration request status no. 4**).

Each new recorded value is saved under the next PR (PR+1).
When all ten parameters have a value other than zero, and a new regeneration starts when driving, the mileage information for **PR816 Stored regeneration start no. 1** is cleared and replaced by the new value.

AFTER REPAIR	Repeat the conformity check from the start.

EDC16_V08_PR816/EDC16_V08_PR817/EDC16_V08_PR818/EDC16_V08_PR819/
EDC16_V08_PR820/EDC16_V08_PR821/EDC16_V08_PR822/EDC16_V08_PR823/
EDC16_V08_PR824/EDC16_V08_PR825/EDC16_V10_PR816/EDC16_V10_PR817/
EDC16_V10_PR818/EDC16_V10_PR819/EDC16_V10_PR820/EDC16_V10_PR821/
EDC16_V10_PR822/EDC16_V10_PR823/EDC16_V10_PR824/EDC16_V10_PR825/
EDC16_V14_PR816/EDC16_V14_PR817/EDC16_V14_PR818/EDC16_V14_PR819/
EDC16_V14_PR820/EDC16_V14_PR821/EDC16_V14_PR822/EDC16_V14_PR823/
EDC16_V14_PR824/EDC16_V14_PR825

GETtheMANUALS.org

PR1012	WEIGHT OF SOOT AFTER REGENERATION

PARAMETER DEFINITION	This parameter indicates the weight of soot in g present in the particle filter after a regeneration.

NOTES	This parameter is to be consulted after using **SC017 Particle filter regeneration**.

Conformity check: Engine stopped and the ignition on, or the engine running and the engine coolant temperature > 80°C without electrical consumers

If **PR1012** is less than **15 g**, the particle filter regeneration completed correctly.
If **PR1012** is greater than **15 g**, a second particle filter regeneration must be performed using command **SC017 Particle filter regeneration**.

IMPORTANT:
Before performing a second After-Sales regeneration of the particle filter, the engine must be allowed to cool down for 2 hours with the bonnet open.
Do not perform a routine oil change before a second After-Sales regeneration (see **SC017 Particle filter regeneration**).

AFTER REPAIR	Repeat the conformity check from the start.

GETtheMANUALS.org

SC001	WRITE SAVED DATA

NOTES	All data must be saved with command **SC003 Save computer data** for this command to be run. Writing is carried out after the computer has been reprogrammed or replaced.

Validating this command writes the data saved using command **SC003 Save computer data**.
The data is as follows:
– vehicle-specific idling,
– options available on the vehicle and managed by the computer (example: air conditioning).
– injector calibration codes (if the vehicle is fitted with IMA),
– programming of exhaust gas recirculation valve data,
– the information required for the correct operation and maintenance of the particle filter.
they will configure the computer and will enable it to avoid:
– engine malfunction after reprogramming or replacing the computer,
– faulty interpretation of information provided by the clip tool.

GETtheMANUALS.org

SC002	ENTER INJECTOR CODES

NOTES	This command is run after replacing the injectors and only if the vehicle is IMA configured (**ET104 Injector code operation is YES**). If this command is not carried out, fault **DF276 Injector code programming** will be present.

WARNING
The letters **J and Q**, and figures **0 and 9** are **not used in IMA coding**.
If these characters are used the entry will be **invalid**.
Cylinder no. 1 is the cylinder located **at the engine flywheel end**.
Procedure to be followed:
– Read the **6-character** alphanumeric codes etched on the upper section of the injector bodies.
– Use command **SC002**.
– Select the cylinder number for the cylinder concerned in the **Desired**, column, then confirm.
– Enter the injector code noted for the cylinder.
– Enter the new codes for each cylinder, then confirm.
– When the command is completed, the modified codes appear in the **Current** column.
– Check that the codes correspond to those read earlier.
– If the codes entered appear in neither the **Current** column nor the **Desired** column, check the codes read and make sure the data has been entered correctly,
The possible confusions are:
figure 1 with letter I and L
figure 2 for the letter Z
figure 5 with the letter S
figure 6 for the letter G
figure 8 with the letter B
– Exit fault finding mode.
– Switch off the ignition and **wait** for the message to appear on the **diagnostic tool: "Loss of dialogue with the computer: EDC16 C3, check the tool connection and the computer supply"**.
– Switch the ignition back on and check for faults.
– **DF276 Injector code programming** should be stored.

If fault **DF276** is still present, the command has not been performed correctly.
Start the procedure again and follow the instructions.
If the codes are still not accepted, check that the computer has been put on standby correctly:
Switch off the ignition and **wait** for the message to appear on the **diagnostic tool: "Loss of dialogue with the computer: EDC16 C3, check the tool connection and the computer supply"**.
If the warning light flashes when the ignition is switched off, the computer has not been put on standby and the command will be ignored.
If all these checks still do not enable the command to be confirmed, contact the Techline.

* Computer on standby after switching the ignition off: approximately 1 minute.

GETtheMANUALS.org

SC003	SAVE COMPUTER DATA

NOTES	The data is saved before computer reprogramming or the computer is replaced.

On the CLIP tool, select the **SC003 Save computer data**.
If the following message appears:
"a saved file exists, do you want to overwrite this data?":
(this file corresponds to the last save carried out on the tool) select **YES**
Confirming this command saves the following vehicle-specific data:
– injector codes,
– the egr valve data programming;
– options available on the vehicle and managed by the computer (e.g.. air conditioning);
– specific data related to the operation of the particle filter.
This information will be saved in the CLIP tool.
When saving is finished, use command **SC001 Write saved data** in order to configure the new computer after programming or reprogramming.

GETtheMANUALS.org

SC017	PARTICLE FILTER REGENERATION

NOTES	Only run this command after interpreting the following faults: – **DF308 Clogged particle filter** – **DF311 Failed regenerations limit exceeded** – **DF312 Speed request**

WARNING
– **It is essential to observe the health and safety regulations (see Technical Note 5040A).**

SAFETY INSTRUCTIONS TO BE FOLLOWED:
The regeneration causes exhaust fumes and high temperatures.
The vehicle must be outside during regeneration.
If it is not possible to carry out regeneration outside, use an extractor fan which can withstand very high regeneration temperatures (**400°C at the exhaust outlet**).
Perform regeneration on a surface free from fire risks (oil, dry leaves, etc.). Nothing should be left in the vicinity of the exhaust pipe. Check that there are no leaks or blockages in the exhaust pipe. Repair if necessary.

IMPORTANT
– **Check the engine oil level before running the command to avoid any engine racing. The oil level must be between the minimum threshold and the middle level on the oil dipstick.**
– **Before performing a particle filter regeneration, it is essential to deactivate the air conditioning compressor (risk of engine damage) and all the electrical consumers.**

IF NECESSARY:
Regeneration can be stopped by briefly pressing the vehicle start button twice (less than **3 seconds**).
Switch off the ignition and wait for the message to appear on the diagnostic tool (maximum time **8 minutes**) **"Communication lost with computer: EDC16 C3, check the tool connection and the computer supply"** before switching the ignition back on.

PROCEDURE TO BE FOLLOWED:
To run this command, select the command mode on the diagnostic tool and select command **SC017 Particle filter regeneration**.

When regeneration is complete, a message will indicate whether the regeneration was successful, and which operations need to be carried out **(filter replacement, whether an oil service is required, etc.).**

GETtheMANUALS.org

SC017 **CONTINUED 1**	

DESCRIPTION OF THE PROCESS
Particle filter regeneration takes place in 3 stages (values given as a guide only):
– **Heating phase**: the engine speed is fixed or varies between **1000 rpm and 1650 rpm**.
This phase lasts at least **3 minutes**, until the coolant temperature exceeds **80°C**.
– **Regeneration phase**: the engine speed is fixed or varies between **1000 rpm and 1650 rpm**. Engine injection is retarded. The exhaust fumes rise in temperature and burn the soot retained in the particle filter. Then the combustion of the soot stored in the particle filter causes the **particle filter upstream temperature** to increase, possibly reaching **700°C** depending on the amount of soot in the filter. This phase lasts between **20 and 25 minutes**.
– **Cooling phase:** the engine speed decreases and varies between **1000 rpm and 1650 rpm**, then increases to **1750 rpm**. Engine injection returns to normal and the exhaust gases cool the particle filter. This phase lasts **3 minutes**. The engine speed returns to idle speed or remains fixed at **1500 rpm**

The procedure lasts at least **30 minutes**, and varies depending on the time taken to reach a coolant temperature of **80°C**.

CONFIRMING THE REGENERATION PROCESS:
At the end of regeneration, a message appears to announce whether the regeneration was successful:
● **Particle filter regeneration finished:**
Consult **PR1012 Weight of soot after regeneration**. If **PR1012** is less than **15 g**, the particle filter regeneration completed correctly. If **PR1012** is greater than **15 g**, a second particle filter regeneration must be performed using the command in **the diagnostic tool** and choose command **SC017**.

IMPORTANT:
Before performing a second After-Sales regeneration of the particle filter, the engine must be allowed to cool down for **2 hours** with the bonnet open.
Do not carry out the usual engine oil change before a second After-Sales regeneration.

● **Particle filter too full - replace the particle filter**: regeneration has failed. The weight of soot in the particle filter is so great that it is creating back-pressure. Deal with any faults that appear or replace the particle filter. Run command **SC036 Reinitialise programming** and select **After particle filter replacement**.

Explain to the customer the procedure for regeneration when driving to avoid unnecessary repairs: see **PART D** in the interpretation of **DF312 Speed request**.

● **Particle filter regeneration failed - run the test Temperature upstream of turbine too low**: the regeneration failed because the temperature upstream of the turbine is too low. Run **test 11 Temperature upstream of turbine too low**.

GETtheMANUALS.org

SC017 **CONTINUED 2**	

In all cases, carry out the following operations:
- switch off the ignition and wait for the message to appear on the **diagnostic tool** (maximum time **8 minutes**): **"Loss of communication with the computer: EDC16 C3, check the tool connection and the computer supply"**.
- switch on the ignition and establish dialogue with the injection computer,
- run command **SC036 Reinitialise programming**,
- depending on the operation performed, select **After particle filter regeneration with diag tool**, or **After particle filter replacement**
- switch off the ignition and wait for the message to appear on the **diagnostic tool** (maximum time **8 minutes**): **"Loss of communication with the computer: EDC16 C3, check the tool connection and the computer supply"**.
- **Then switch on the ignition again** and **clear** the **present** or **stored** faults from the computer memory **(operation to be carried out within 3 minutes of switching on the ignition)**.

If **DF308 Particle filter clogged** or **DF312 Speed request** is still present, contact Techline.

Note:
It is essential to change the **engine oil** and the **oil filter** in the following cases:
- following an After-Sales regeneration only if a message on the **CLIP diagnostic tool** requests it,
- following particle filter replacement,

after a second regeneration (when two successive regenerations).

GETtheMANUALS.org

SC036	REINITIALISE PROGRAMMING

NOTES	This command is used to reset the computer parameters according to the type of operation or component repaired or replaced from the following list: – the EGR valve, – the damper valve, – after particle filter replacement, – after particle filter regeneration with the **CLIP diagnostic tool**, – after replacing the injection computer without the possibility of saving. **Ignition on and engine stopped.**

To run this command, in the **CLIP diagnostic tool**, select scenario **SC036 Reinitialise programming**.
Procedure to be followed:
– on the main screen, select the component to reinitialise after an operation (removal/refitting, regeneration or replacement of component),
– select **YES** then **OK** to begin reinitialisation,
– select **Finish** on the **Configuration done** screen to return to the main screen,
– end of operation.

GETtheMANUALS.org

RZ005	PROGRAMMING

NOTES	This command is only executed after replacing the computer.

Command **RZ005** reconfigures the computer.
If the computer does not have any configuration data, use command **RZ005** to enter the vehicle options:
– air conditioning,
– thermoplunger,
– cruise control.
These options are detected by the computer even if command **RZ005** is not used.
The computer is configured as soon as the one of the vehicle's optional system components is operated.

GETtheMANUALS.org

AC004	TURBOCHARGING SOLENOID VALVE

NOTES	This command is run if a fault is detected in the turbocharging circuit.

This command checks that the turbocharger and the control circuit are working properly.

Introduction

1-Check the sealing of the high pressure air circuit:
Pipes not joined or pierced, pressure sensor disconnected or poorly fitted (seal present), intercooler pierced. To test the intercooler: stabilise the engine speed between **3,500** and **4,000 rpm** with the vehicle stopped and check that there are no leaks.
Check the resistance of the turbocharging limitation solenoid valve between **tracks 1 and 2**.
Replace the solenoid valve if its resistance is not **15.4 Ω ± 0.7 at 20°C**.
Check the injection computer connections.
Check for **continuity and make sure there is no interference resistance** on the following connection:
Injection computer grey 32-track connector **C track E1** ⟶ **Track 1** turbocharging solenoid valve
Repair if necessary.
Check for the presence of **+ 12 V** after relay on **track 2** of the turbocharging solenoid valve.

2 - Turbocharger control circuit check
- With the engine switched off, make sure the control rod is in the rest position,
- Start the engine and make sure that the control rod operates to the upper stop.
- (when the engine is switched off, the control rod should return to the rest position)
- If the control rod movements do not conform, carry out the following checks:

1) Vacuum pressure control check:
- Disconnect the solenoid valve inlet **hose** and connect it to a pressure gauge,
- Start the engine and stabilise it at idle speed,
- If the vacuum pressure does not reach **800 mbar ± 100**: check the vacuum pressure circuit from the vacuum pump.
- Stop the engine, reconnect the inlet hoses and go to step no. 2.

2) Solenoid valve control check:
- Disconnect the solenoid valve outlet **hoses**,
- Start the engine and stabilise it at idle speed,
- Place your hand on the solenoid valve and block the **outlet** union with your thumb,
- If you notice no solenoid valve vibration, check the operation of the computer output (**step 5**)

3) Solenoid valve operation check:
- Attach the pressure gauge to the **outlet** union of the solenoid valve,
- Start the engine and stabilise it at idle speed,

If the vacuum pressure does not reach **800 mbar ± 100**, replace the solenoid valve.

GETtheMANUALS.org

AC004 **CONTINUED**	

Turbocharger control circuit check (continued)

4) Turbocharger operation check:
a) Attach a vacuum pump to the **Hose** connected to the turbocharger control diaphragm,
Apply a vacuum of **800 ± 100 mbar**:
If there is a leak, replace the turbocharger (diaphragm included).
b) Check the movement and adjustment of the control rod (See **12B, turbocharging**).
If the control rod is sticking, replace the turbocharger.
c) Engine cold and stopped:
Remove the turbocharger inlet duct and check that the compressor turns freely on the axis.
d) If the fault is still present:
Check that the exhaust manifold is not leaking.
Check that the exhaust is not blocked.
Carry out the necessary repairs.
5) Computer output stage check (solenoid valve connected): This operation **can only be carried out if** the checks indicated in **step** no. 2 **are not conclusive**.
Either with the voltmeter: connect the voltmeter earth lead to **track 2** of the solenoid valve and the positive cable to **track 1**,
Clear any solenoid valve fault then run command **AC004:**
➡ The voltmeter should display **ten cycles** of two successive voltages ~ = battery voltage X current OCR*.
either: **~ 2.5 V** (OCR for **20%**) then **~ 8.7 V** (OCR for **70%**).
Or with the oscilloscope (at 5 V/division range and time base 1 ms/division): Connect the oscilloscope earth lead to the battery earth and the positive test pin to **track 2** of the solenoid valve,
Clear any solenoid valve faults, then run command **AC004**:
➡ the oscilloscope should display a square-wave signal of 12.5 volts amplitude at a frequency of 140 Hz (with an OCR going successively from ~20 à ~70 %).
if the measurement is correct, replace the solenoid valve.
if the measurement does not show any control or continuous voltage, contact the techline.

* Opening cyclic ratio

GETtheMANUALS.org

AC012	DAMPER VALVE

NOTES	Carry out this interpretation: – after fault **DF226 Damper valve**, – or after a customer complaint (starting faults, poor performance). Ignition on and engine stopped.

Check the **continuity, the insulation, and the absence of interference resistance** on the following connection:

Vehicle earth, **track 1** ⟶ **track 1** damper valve solenoid valve connector

+12 V after relay feed ⟶ **track 2** damper valve solenoid valve connector

Repair if necessary.

Check for **+12 V** on **track 2** of the damper valve solenoid valve connector.
Repair if necessary.

Check for **earth** on **track 1** of the damper valve solenoid valve connector. Repair if necessary.

Check that the **damper valve** is **open**.
If not, clean or replace the air vent unit.

Actuate the valve using command **AC012** and check the damper valve travel and rest position of the valve.
Check the operation of the computer output stage with a voltmeter:
Actuate the valve with command **AC012**.
If the solenoid valve opens (vacuum pump pressure gauge returns to atmospheric pressure), go to **step C**.

If not, with the solenoid valve connected, check the operation of the computer output stage using a voltmeter:

Negative lead of voltmeter ⟶ **track 1** of the damper valve solenoid valve

Positive lead of voltmeter ⟶ **track 2** of the damper valve solenoid valve

The voltmeter should display three **ON-OFF** cycles (**12.5 V** then return to **0 V**).
If the measurement is correct, replace the damper valve.
If the measurement does not show any operation, **contact the Techline**.

GETtheMANUALS.org

AC031	THERMOPLUNGER No. 3 RELAY (check that the computer is correctly configured)

NOTES	**No faults should be present or stored.** Perform this fault finding procedure if there is a fault in the **command** menu, or a passenger compartment heating/demisting fault. Refer to the **wiring diagrams** in the Technical Note for your vehicle to locate the relevant fuses and relays.

If the additional heater no. 3 **relay is not operating** during command **AC031**:
Check the **additional heater no. 3** relay mounting.
check the engine management computer connections.
Repair if necessary.

If the fault is still present, check that the relay is being controlled by the engine management computer as follows:
Disconnect the **additional heater no. 3 relay**, fit a resistor of **50 to 100** Ω on the mounting in place of the coil, and connect a voltmeter as follows:
Positive terminal to **+ 12 V** battery feed
Negative terminal to **track 2** of the **additional heater no. 3** relay mounting.
Clear the fault and actuate the relay using command **AC031**.
if the voltmeter shows the battery voltage (two **2-second** on-off cycles), replace the additional heater no. 3 relay.
If the voltmeter does not show the battery voltage (two **2-second** ON-OFF cycles), contact the Techline.

If the additional heater no. 3 **relay is fed** by command **AC031**, but there is still a fault with the passenger compartment heating and demisting, check, using a wiring diagram:
the conformity of the thermoplunger maxi-fuse, the presence of the **+ 12 V battery** on **track 3** of the additional heater no. 3 relay mounting,
the conformity of the additional heater no. 3 relay.
The continuity between **track 5** of the **additional heater no. 3** relay mounting and the supply terminal for thermoplunger 3.
the conformity of the thermoplunger resistance: **0.45 ± 0.05** Ω **at 20°C**,
the presence of earth at the water chamber (thermoplunger mounting).
Also check the level of the cooling circuit and that there are no leaks.
Carry out the necessary repairs.

GETtheMANUALS.org

AC035	FUEL PRESSURE SOLENOID VALVE

NOTES	This command enables the operation of the pressure regulator and the high-pressure injection circuit to be checked.

Step 1

Measure the pressure regulator resistance between **tracks 1** and **2**.
– Replace the regulator if its resistance is not approximately: **3 Ω ± 0.5 at 20°C**.
Check **the continuity and absence of interference resistance** of the following connections:
Injection computer, connector **B**
brown 48-track, track **M4** ⟶ **track 2** of the rail pressure regulator connector.
+ **12 V** after relay feed ⟶ **track 1** of the rail pressure regulator connector.
If, when running command **AC035**, you can hear a slight whistling noise and a crunching noise from the pressure regulator, go to **step 2**. Otherwise, ensure that the computer output stage is functioning correctly:

● **Using a voltmeter:**
With the solenoid valve connected, connect the voltmeter earth lead to **track 2** of the fuel pressure solenoid valve and the positive cable to **track 1**. Clear any fuel pressure solenoid valve faults, then run command **AC035**:

➡ The voltmeter should display two successive voltages: ~ 2.5 V for an OCR at 20 % then~ 8.75 V at an OCR at 70 % (ten cycles)

● **Or using an oscilloscope** (range 5 V/division and with time base 1 ms/division):
With the solenoid valve connected, connect the oscilloscope earth to the battery earth and the positive test pin to **track 2** of the fuel pressure solenoid valve; clear any fuel pressure solenoid valve faults then enter command **AC035**:

➡ The oscilloscope should display a square wave signal of 12.5 V in amplitude at a frequency of 185 Hz (with an OCR* passing successively from 20 to 70%).
if the measurement is correct, replace the regulator.
If the measurement is not correct, contact the Techline.

Step 2

-Next page-

* Opening cyclic ratio

GETtheMANUALS.org

AC035 **CONTINUED**	

Step 2

In the event of rail overpressure, check the operation of the injectors (see **Component testing** section, **Test 10 Poor injector operation**).
Check the operation of the rail pressure sensor (see Interpretation of faults **DF007 Rail pressure sensor circuit**). if these checks do not reveal any faults, and if the fault is still present, replace the rail pressure sensor.

in the event of rail underpressure:
Check that the rail pressure sensor is operating correctly:
Fault interpretation **DF007 Rail pressure sensor circuit**.
Check the low pressure diesel circuit priming.
Check the conformity of the diesel filter connections.
Check the condition of the filter (clogging and water saturation).
Check there are no air bubbles between the filter and the high pressure pump.
Check the low and high pressure diesel circuits sealing (visual checks, odour, etc.): pump casing, overpressure valve, pipes, rail and injector unions, injector wells, etc.).
Check the conformity of the seal fitting on the pressure regulator.
Check the operation of the injectors (see **Component testing, Test 10 Poor injector operation**).
Carry out the necessary repairs.

GETtheMANUALS.org

AC037	PREHEATING RELAY

NOTES	This command is only carried out if the fault **DF017 Heater plugs unit control circuit**, or **DF025 Preheating unit fault finding connection** is present or stored and if no other fault is present. Refer to the **Wiring diagrams** Technical Note for your vehicle to locate the relevant fuses and relays

Before applying the following fault finding procedure, check that the battery voltage is not below 12 V.

Step 1:

Using a multimeter fitted with an Amps clamp, group together the 4 supply wires for the heater plugs.
Actuate the preheating relay using the **AC037** command and measure the current used by the 4 heater plugs.
If the current drawn is not between **60 and 80A**, go to step 2, otherwise end fault finding.

Step 2:

Check the connections on the preheating unit, heater plugs and injection computer.
Repair if necessary.
Measure the resistance of the heater plugs. If this resistance is greater than **2** Ω replace the faulty plug(s).
Check the continuity and for the absence of interference resistance between:

- preheating unit **track 1** ⟶ heater plug of cylinder **3**
- preheating unit **track 2** ⟶ heater plug of cylinder **4**
- preheating unit **track 6** ⟶ heater plug of cylinder **1**
- preheating unit **track 7** ⟶ heater plug of cylinder **2**

Check the condition of the preheating unit supply fuse **F01 (70A)**. Replace it if necessary.
Then check for the **+ 12 V feed** on track **3** of the preheating relay connector.
Check the continuity and for the absence of interference resistance between:

- Injection computer connector **B track B3** ⟶ **track 9** of the preheating unit connector
- Injection computer connector **B track C3** ⟶ **track 8** of the preheating unit connector

If the fault is still present, replace the pre-postheating unit.

GETtheMANUALS.org

AC038	LOW-SPEED FAN ASSEMBLY RELAY

NOTES	**No faults should be present or stored.** Perform this fault finding procedure if a malfunction appears on the **command** menu or after an engine cooling system or air conditioning fault. Refer to the **wiring diagrams** in the Technical Note for your vehicle to locate the relevant fuses and relays.

If, when running command **AC038, the low speed fan unit relay does not work**:
Check the **low-speed fan unit** relay mounting and the connections of the engine management computer.
Repair if necessary.

If the fault is still present, check that the relay is actuated by the engine management computer as follows:
Disconnect the **low-speed fan assembly** relay, fit a **50 to 100** Ω resistor on the relay mounting in place of the coil, and connect a voltmeter as follows:
Positive terminal to **+ 12 V** battery feed
Negative terminal to **track 2** of the **low-speed fan assembly relay** mounting.
Clear the fault and run command **AC038**
If the voltmeter indicates the battery voltage (three **2-second** ON-OFF cycles), replace the relay.
If the voltmeter does not show the battery voltage (three **2 second** ON-OFF cycles), contact the techline.

If the low-speed fan assembly relay operates using command **AC038**, but there is still a fault with triggering the fan assembly, use the wiring diagram to check:
the conformity of the fan assembly maxi-fuse.
the conformity of the **low-speed fan unit** relay,
the continuity of the connection between **track 5** of the **low-speed fan assembly** relay mounting and **track 1** of the low-speed resistor,
the conformity of the low-speed resistance (resistor and connections),
the continuity of the connection between **track 2** of the low-speed resistor connector and **track 1** of the fan assembly connector,
the conformity of the fan assembly and the continuity between **track 2** and earth.
Carry out the necessary repairs.

GETtheMANUALS.org

AC039	HIGH SPEED FAN ASSEMBLY

NOTES	**No faults should be present or stored.** Perform this fault finding procedure after detecting a fault in the commands menu or following a problem of engine cooling. Refer to the **wiring diagrams** in the Technical Note for your vehicle to locate the relevant fuses and relays.

If, when running command **AC039 High-speed fan assembly relay does not operate**:
Perform a check on the **high speed fan assembly** relay mounting and the connections of the engine management computer.
Repair if necessary.

If the fault is still present, check that the relay is being controlled by the engine management computer as follows:
Disconnect the **high speed fan assembly** relay, fit a **50 to 100** Ω resistor on the mounting in place of the coil, and connect a voltmeter as follows:
Positive terminal to **+ 12 V** battery feed
Negative terminal to **track 2** of the **high-speed fan assembly** relay mounting.
Clear the fault and run command **AC039**.
If the voltmeter indicates the battery voltage (three **2-second** ON-OFF cycles), replace the relay.
If the voltmeter does not show the battery voltage (three **2 second** ON-OFF cycles), contact the techline.

If the **high-speed fan assembly** relay is supplied by command **AC039**, but there remains a fault with the triggering the fan assembly. Check using the wiring diagram:
the conformity of the fan assembly maxi-fuse.
for the + battery feed on **track 3** of the **high-speed fan assembly** relay mounting,
the conformity of the **high-speed fan assembly** relay,
the continuity of the connection between **track 5** of the **high-speed fan assembly** relay mounting and **track 1** of the fan assembly connector,
the conformity of the fan assembly,
the continuity of the connection between **track 2** of the fan unit connector and earth.
Carry out the necessary repairs.

GETtheMANUALS.org

AC063	THERMOPLUNGER No. 1 RELAY (check that the computer is correctly configured)

NOTES	**No faults should be present or stored.** Perform this fault finding procedure if there is a fault in the **command** menu, or a passenger compartment heating/demisting problem. Refer to the **wiring diagrams** in the Technical Note for your vehicle to locate the relevant fuses and relays.

If the **additional heater 1 relay does not work** when running command **AC063**:
Check the **additional heater 1** relay mounting.
Check the engine management computer connectors.
Repair if necessary.

if the fault is still present, check as follows that this relay is controlled by the engine management computer:
Disconnect the **additional heater no. 1** relay, fit a **50 to 100** Ω resistor on the mounting in place of the coil, and connect a voltmeter as follows:
Positive terminal to **+ 12 V** battery feed
Negative terminal to **track 2** of the **additional heater no. 1** relay mounting.
Clear the fault and actuate the relay using command **AC063**.
If the voltmeter shows the battery voltage (two 2-second ON-OFF **cycles**), replace the additional heater relay 1.
If the voltmeter does not show the battery voltage (two **2-second** ON-OFF cycles), contact the Techline.

If the **additional heater 1** relay is fed by command **AC063**, but there is still a fault with the passenger compartment heating and demisting, check using a wiring diagram:
the conformity of the thermoplunger maxi-fuse,
the presence of the **+12 V battery feed** on **track 3** of the **additional heater 1** relay mounting,
the conformity of the additional heater 1 relay,
the continuity between **track 5** of the "additional heater relay **1**" relay mounting and the supply terminal for thermoplunger 1.
the conformity of the thermoplunger resistance: **0.45 ± 0.05** Ω **at 20°C**,
the presence of earth at the water chamber (thermoplunger mounting).
Also check the level of the cooling circuit and that there are no leaks.
Carry out the necessary repairs.

GETtheMANUALS.org

AC064	THERMOPLUNGER No. 2 RELAY (check that the computer is correctly configured)

NOTES	**No faults should be present or stored.** Perform this fault finding procedure if there is a fault in the **command** menu, or a passenger compartment heating/demisting problem. Refer to the **wiring diagrams** in the Technical Note for your vehicle to locate the relevant fuses and relays.

If the additional heater relay 2 does not operate when running command **AC064**:
Check the **additional heating 2** relay mounting.
check the engine management computer connections.
Repair if necessary.

if the fault is still present, check as follows that this relay is controlled by the engine management computer:
Disconnect the **additional heater no. 2 relay**, and fit a **50 to 100** Ω resistor on the mounting in place of the coil and connect a voltmeter as follows:
Positive terminal to **+ 12 V** battery feed
Negative terminal to **track 2** of the **additional heater no. 2** relay mounting.
Clear the fault and actuate the relay using command **AC064**.
If the voltmeter shows the battery voltage (two 2-second ON-OFF **cycles**), replace the additional heater relay 1.
If the voltmeter does not show the battery voltage (two **2-second** ON-OFF cycles), contact the Techline.

If the **additional heater 2** relay is fed by command **AC064**, but there is still a fault with the passenger compartment heating and demisting, check, using a wiring diagram:
the conformity of the thermoplunger maxi-fuse,
the presence of the **+ 12 volts battery feed** on **track 3** of the **additional heater no. 2** relay mounting,
the conformity of the additional heater relay no. 2.
The continuity between **track 5** of the mounting for the **additional heater no. 2** relay and the supply terminal for thermoplunger **2,**
the conformity of the thermoplunger resistance: **0.45 ± 0.05** Ω **at 20°C**,
the presence of earth at the water chamber (thermoplunger mounting).
Also check the level of the cooling circuit and that there are no leaks.
Carry out the necessary repairs.

GETtheMANUALS.org

AC103	EGR BY-PASS

NOTES	This command is only carried out if a fault linked to the exhaust gas recirculation is present or stored.

This command allows the EGR by-pass solenoid valve function to be checked. Run command **AC103**.
The solenoid valve must actuated for 10 cycles.
Put your hand on the body of the solenoid valve to check its movement.
If no movement is detected:
Check the continuity and absence of interference resistance of the following connections:

Engine management computer connector **B track L3** ⟶ **track 1** of the solenoid valve
+12 V after relay feed ⟶ **track 2** of the solenoid valve

Repair if necessary.

Measure the resistance **between terminals 1 and 2 of the solenoid valve**.
Replace the solenoid valve if its resistance is not between **43 and 49** Ω.

GETtheMANUALS.org

VP036	INHIBIT FUEL SUPPLY

NOTES	This command restores fuel supply to the injectors. This command is carried out with the engine switched off, and ignition on.

This command allows the injectors to be locked, so that starting is not possible.
Command **VP036** enables you to test the engine compression safely.
Run command **VP036**, and try to start the vehicle.
If the vehicle does not start, check the engine compression and reestablish the injector actuation using command **VP037 Lift fuel supply inhibition**.

GETtheMANUALS.org

VP037	CANCEL FUEL SUPPLY INHIBITION

NOTES	This command restores fuel supply to the injectors. This command is carried out with the engine switched off, and ignition on.

The command allows the supply to the injectors to be re-established, following an engine compression test.
Run command **VP037**, and try to start the vehicle.
If the vehicle does not start, start the procedure again.

GETtheMANUALS.org

NO COMMUNICATION WITH THE COMPUTER	→ ALP1
STARTING DIFFICULT OR IMPOSSIBLE	→ ALP2
INJECTION NOISE	→ ALP3
POOR PERFORMANCE	→ ALP4
IRREGULAR ENGINE OPERATION	→ ALP5
ROUGH IDLE	→ ALP7
PARTICLE FILTER WARNING LIGHT COMES ON TOO OFTEN	→ ALP8

GETtheMANUALS.org

ALP1	No dialogue with engine management computer

NOTES	**Before dealing with this customer complaint, check that there are no faults, and the conformity (or otherwise) of the parameters and statuses using the diagnostic tool.** **If the customer complaint is not eliminated, perform the following checks.**

Check the conformity of the vehicle type and the domain selected on your tool!
Check that the tool is not faulty by trying to establish dialogue with a computer on another vehicle.
Check the condition of the main relay supply fuse **M3 30A**.
Replace it if necessary.
Remove the relay **R8** and check it is working correctly.
If this relay is defective, replace and retry to establish communication.
Check the continuity and absence of interference resistance on the following connection:
Injection computer **48-track** connector **B, Track E1** ⟶ Relay mounting **R8 track 15**
Check the supply to the diagnostic socket:
+ Before ignition feed on **track 16**/ + After ignition feed on **track 1**/ Earth on **tracks 4 and 5**
Check (according to wiring diagram and equipment):
the conformity of the + After ignition fuse.
the conformity of the injection relay mounting feeds,
the conformity of the injection relay: **65 Ω ± 5 Ω** between **tracks 1** and **2**
infinite resistance between **tracks 3** and **5** (open contact)
resistance **< 0.2** between **tracks 3** and **5** (closed contact)
Disconnect the engine management computer and check that there are no conducting parts on the computer studs. If this reveals any kind of impurity, rectify it and try to establish dialogue.
If the fault is still present:
Check **the continuity and absence of interference resistance** on the following connections:
Engine management computer, **connector A track B4** ⟶ Diagnostic socket **track 7 (line K)**
Ensure that the power supplies are in order:
Engine management computer, **connector A track D1** ⟶ **+ After ignition feed**
Engine management computer, **connector B tracks L3, L4, and M4** ⟶ **Earth**
By shunting the normally open injection relay contact, i.e. **tracks 3** and **5** of the relay mounting:
Engine management computer, **connector B tracks M3 and M2** ⟶ **+12 V battery feed** (via test shunt)
Check the continuity of the connection between:
Engine management computer, **connector B track E1** ⟶ **track 2** of the central injection unit supply relay mounting

AFTER REPAIR	Carry out a road test followed by a complete check with the diagnostic tool.

GETtheMANUALS.org

ALP1 CONTINUED	

Try to start communication with another computer on the same vehicle.

- ➡ If dialogue is established with **another computer on the same vehicle**, contact the Techline.
- ➡ If you cannot communicate with **another computer on the same vehicle**, it may be that a faulty computer is causing interference with the multiplex network.

To locate it, proceed by elimination, disconnecting all the computers linked to the multiplex network one by one (according to the wiring diagram and the equipment): air conditioning, airbag, ABS system, UCH, instrument panel. try to establish a dialogue between each disconnection:

If, after a disconnection, you manage to establish dialogue, perform the fault finding procedure for the computer concerned.

- ➡ If the fault is still present, reconnect the computers listed above and disconnect the engine management computer. try to establish dialogue with another computer.
- ➡ If you manage to establish dialogue, go to **step 2.**
- ➡ If you still cannot establish dialogue, disconnect **all** the computers connected to lines **K and/or L** and check the insulation against **+ 12 V** and against earth on **track 7** and **track 15** of the **diagnostic socket**. Carry out the necessary repairs.

If the fault is still present, contact the techline.

AFTER REPAIR	Carry out a road test followed by a complete check with the diagnostic tool.

GETtheMANUALS.org

ALP2	Starting faults (or starting impossible)

NOTES	**Before dealing with this customer complaint, check that there are no faults, and the conformity (or otherwise) of the parameters and statuses using the diagnostic tool.** **If the customer complaint is not eliminated, perform the following checks.**

impossible

A ← **Is it difficult or impossible to start the engine?**

difficult ↓

Check the engine earths.
Make sure that the engine speed reaches **250 rpm** when the starter motor is operated, displayed in the parameter screen,
check the conformity of the fuel used by running **test 7 Diesel fuel conformity check**,
check the conformity of the fuel filter connections,
ensure that the fuel filter is not saturated with water.
check there are no air bubbles between the filter and the high pressure pump,
check the operation of the heater plugs and unit with command **AC037 Preheating relay**,
check the condition of the air filter (clogging),
check the sealing of the high pressure diesel fuel circuit; pump, pipes, unions (visual inspection + odours),
check the position of the EGR valve: jamming or mechanical seizure.
check the consistency of the signal from the engine coolant temperature sensor,
check the operation of the pressure regulator (refer to interpretation of the command **AC035 Fuel pressure solenoid valve**,
check the operation of the injectors (too much return leakage, clogging, seizing) consult Test 10 (see component test, Test 10 Poor injector operation),
check that the compressions are balanced in accordance with the power consumption in the starting phase (Compression test MENU on the CLIP tool).
In the event of an imbalance, use a compression gauge to complete the measurements.
after the operation, clear the faults caused by disconnecting the regulator and the heater plugs.

AFTER REPAIR	Carry out a road test followed by a complete check with the **diagnostic tool**.

GETtheMANUALS.org

ALP2 CONTINUED 1	

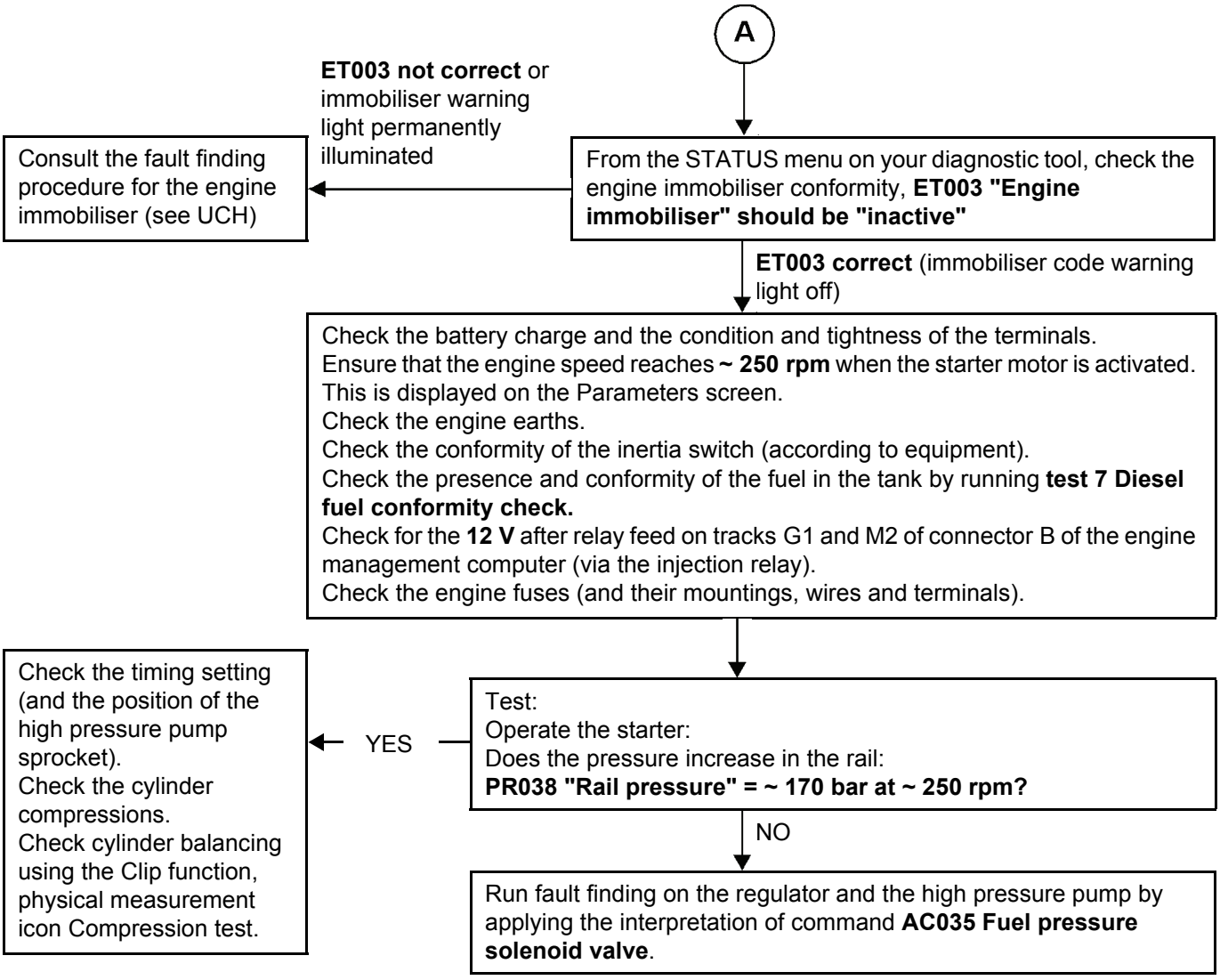

AFTER REPAIR	Carry out a road test followed by a complete check with the diagnostic tool.

GETtheMANUALS.org

ALP3	Injection noise

NOTES	**Before dealing with this customer complaint, check that there are no faults, and the conformity (or otherwise) of the parameters and statuses using the diagnostic tool.** **If the customer complaint is not ironed out, perform the following checks:**

If the injection noise occurs after starting from cold:
Check the low pressure diesel circuit priming.
Check the fuel heater supply.
Check the operation of the preheating system.
Check that fuel and engine temperatures are consistent.
If the complaint is still present, check the rail pressure (**PR038**) and apply interpretation of command **AC035 Fuel pressure solenoid valve.**.

If the injection noise occurs at idle speed:
Check the condition of the injector connector and pressure regulator terminals.
Check the conformity of the air flow signal (refer to parameter **PR132 Air flow**).
Check the condition of the EGR valve (clogging, blocked, seized).
If the complaint is still present, perform a fault finding procedure on the injectors with TEST 10 Poor injector operation.

does the injection noise occur at all engine speeds?
Run fault finding on the injectors (consult Test 10 Poor injector operation).
Check the condition of the injector connector and pressure regulator terminals.
Check the conformity of the fuel by running **test 7 Diesel fuel conformity check**.
Replace the diesel fuel if it does not match and bleed the low and high pressure circuits of diesel fuel.
Check the conformity of the air flow signal (use the interpretation of the fault finding procedure **PR132 Air flow**).
If the customer complaint is still present, check the rail pressure (PARAMETERS MENU) and apply the interpretation of command **AC035 Fuel pressure solenoid valve**.

If the injection noise occurs at transitional speed:
If the engine races when changing gear, check, if there is a floor carpet, whether the floor carpet is blocking the accelerator pedal, then the conformity of the clutch switch and the conformity of the accelerator pedal when released.
When changing gear during a road test, display parameter **PR017 Fuel flow**. If it varies, without notable influence on the rail pressure, apply command interpretation **AC035 Fuel pressure solenoid valve.**
If the complaint is still present, run fault finding on the injectors (consult the ALP for **TEST 10 Poor injector operation**).

AFTER REPAIR	Carry out a road test followed by a complete check with the diagnostic tool.

GETtheMANUALS.org

ALP4	Poor performance

NOTES	**Before dealing with this customer complaint, check that there are no faults, and the conformity (or otherwise) of the parameters and statuses using the diagnostic tool.** **If the customer complaint is not ironed out, perform the following checks:**

IMPORTANT
In the event of the engine overheating above **110°C**, the computer deliberately limits the fuel flow, and supplies the engine fan unit until the battery is completely discharged.

Is the poor performance accompanied by smoke?

NO

YES

Check:
– That the EGR valve is not stuck in the open position.
– That the injectors are properly mounted (presence and conformity of the sealing washer).

YES

Is the engine running on all cylinders?

NO

Check the operation of the injectors (see **TEST 1**).

If the fault is still present

Check conformity on the following components:
– accelerator pedal position sensor,
– brake pedal sensor,
– atmospheric pressure regulator,
– EGR valve.
Check the condition of the air filter,
Check the consistency of the signal:
– from the flow sensor or air temperature/pressure sensor/,
– from the coolant temperature sensor,
– from the fuel temperature sensor,
– from the engine speed sensor,
– from the swirl flap (depending on equipment).
Check there are no foreign bodies on the flow sensor grille (visual inspection only).

AFTER REPAIR	Carry out a road test followed by a complete check with the diagnostic tool.

GETtheMANUALS.org

ALP4 **CONTINUED**	

Check:
– that the diesel filter is not clogged,
– that there are no leaks in the low pressure and high pressure diesel fuel circuits,
– that the air inlet circuit is complete (sealed and not obstructed),
– that the oil vapour rebreathing system is connected,
– the flow regulator (jammed/seized, check the interpretation of command AC035 Fuel pressure solenoid valve,
– the turbo control (jammed/seized, check the interpretation of command AC004 Turbocharging solenoid valve,
– check the cylinder compression (Cylinder compression balance, with the **Compression test** function on the CLIP tool),
– Check that the exhaust pipe is not blocked.

AFTER REPAIR	Carry out a road test followed by a complete check with the diagnostic tool.

GETtheMANUALS.org

ALP5	Irregular engine operation

NOTES	**Before dealing with this customer complaint, check that there are no faults, and the conformity (or otherwise) of the parameters and statuses using the diagnostic tool.** **If the customer complaint is not ironed out, perform the following checks:**

If the engine bucks or races during gear changes, check the conformity of the clutch switch.
If the fault is still present:
Check the conformity of the fuel used by running **test 7 Diesel fuel conformity check**,
- check the priming of the low pressure fuel circuit,
- check the conformity of the low-pressure circuit connections
- check the conformity of the diesel filter and that it is not saturated with water (replace the filter if necessary),
- check that there are no air bubbles between the filter and the high pressure pump,
- check the conformity of the rail pressure (warm engine):
  ± 25 bar around the rail pressure value at idle speed, (the minimum to maximum variations in the rail pressure at idle speed should not exceed **50 bar**).
  ~ 1600 bar with full load on the accelerator.

In the event of an irregularity, apply command interpretation **AC035 Fuel pressure solenoid valve.**
Check the conformity of the air flow, apply the interpretation of parameter **PR132 Air flow.**
If the fault is still present:
- Check the operation of the injectors (see TEST 10 Poor injector operation).
- Check cylinder balancing using the CLIP function, physical measurement icon **Compression test**.
- Check the engine compressions with the special tool, if necessary.

AFTER REPAIR	Carry out a road test followed by a complete check with the diagnostic tool.

GETtheMANUALS.org

ALP6	Fuel system leaks

NOTES	**Before dealing with this customer complaint, check that there are no faults, and the conformity (or otherwise) of the parameters and statuses using the diagnostic tool.** **If the customer complaint is not ironed out, perform the following checks:** **IMPORTANT** **Please observe the cleanliness guidelines and safety advice.**

Procedure for checking for an external leak on the fuel circuit:
Clean away traces of grease with clean thinner and wipe the part or parts concerned with cleaning cloths.
Start the engine and increase the engine temperature until the diesel fuel reaches 40/50°C.
Stop the engine and check for traces of grease on the part or parts concerned.
If this is the case, replace the part or parts concerned.
Bleed the fuel circuit and continue the checks.

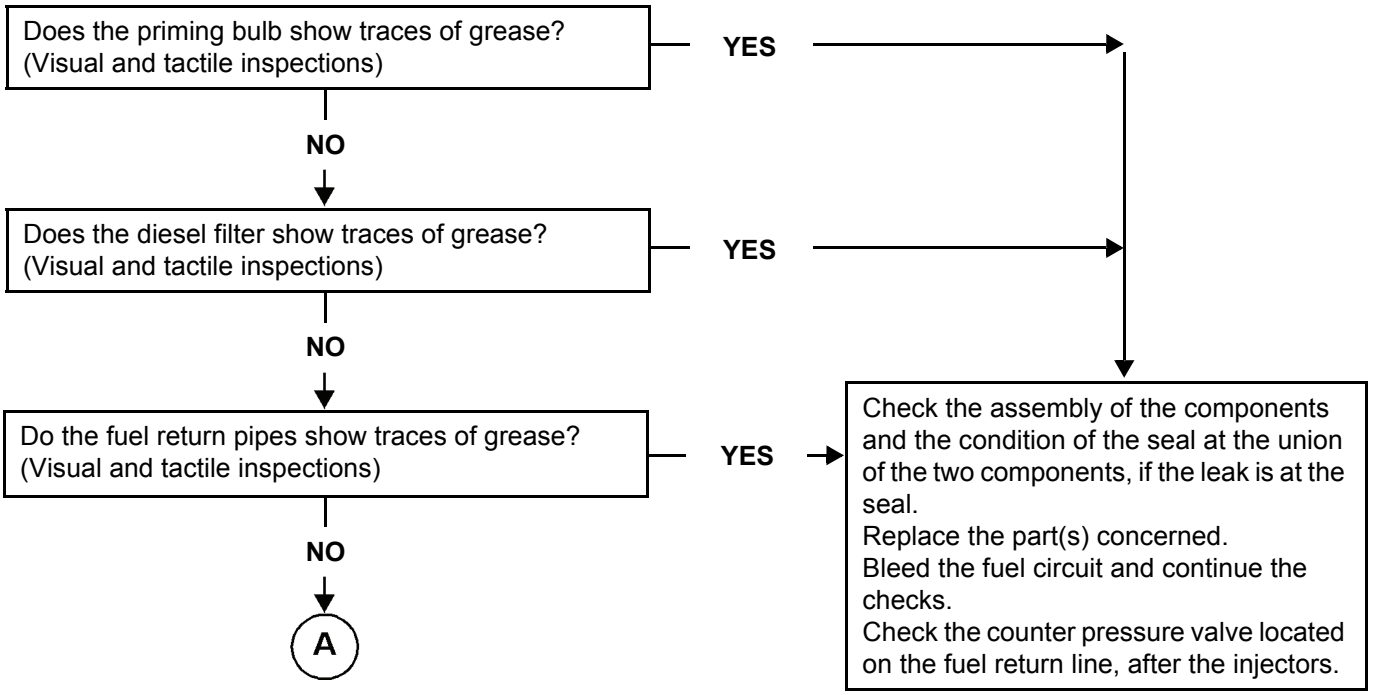

AFTER REPAIR	Carry out a road test followed by a complete check with the **diagnostic tool**.

GETtheMANUALS.org

ALP6 CONTINUED	

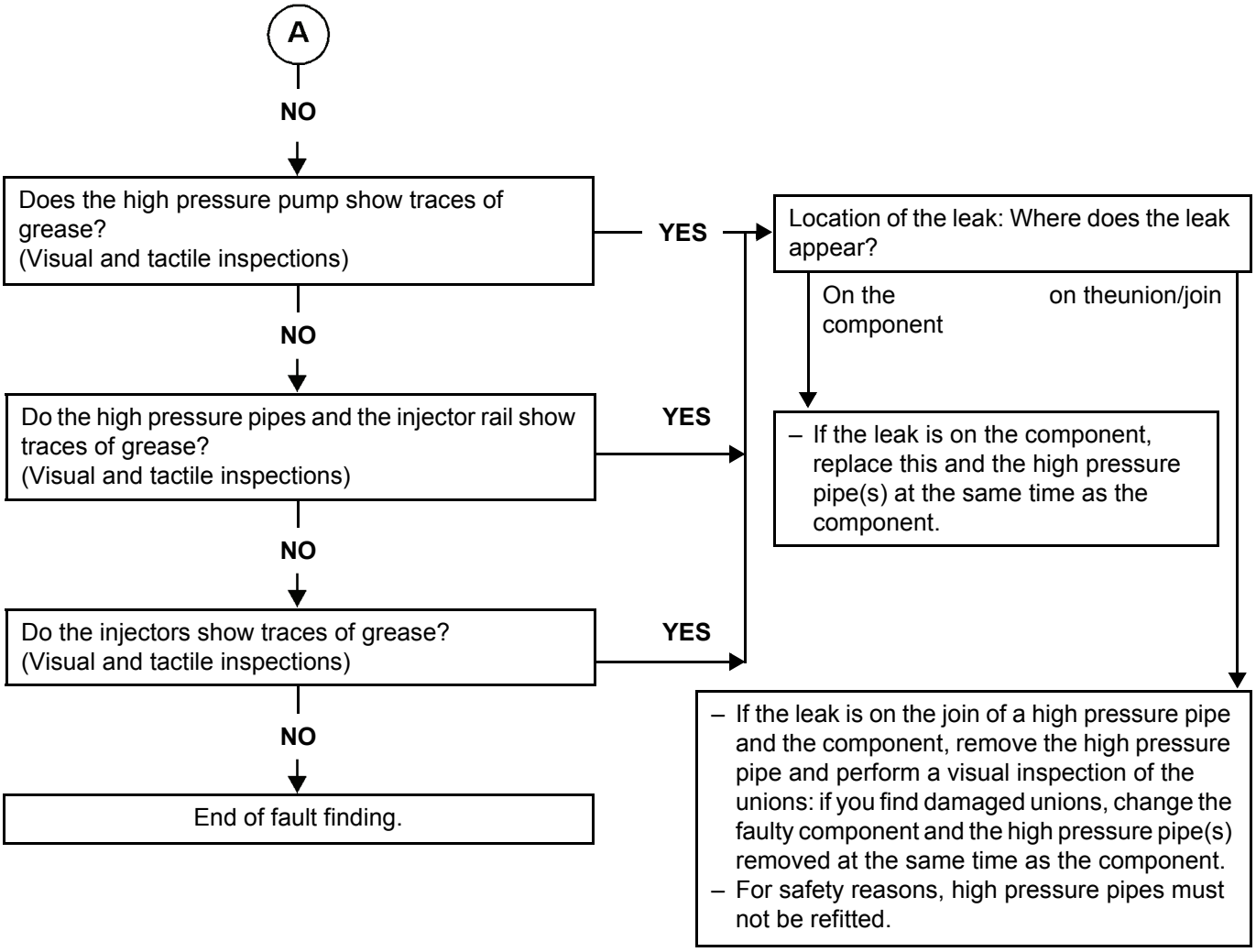

Reminder:
Only replace the rail, pump or injector if there is damage to the union and this damage is visible during checks.
Bleed the fuel circuit and continue the checks.

AFTER REPAIR	Carry out a road test followed by a complete check with the **diagnostic tool**.

GETtheMANUALS.org

ALP7	Rough idle

NOTES	**Before dealing with this customer complaint, check that there are no faults, and the conformity (or otherwise) of the parameters and statuses using the diagnostic tool.** **If the customer complaint is not eliminated, perform the following checks.**

Check the sealing and condition of the inlet circuit by running **Test 3 Turbocharged air inlet circuit check**.

↓

Check the low pressure circuit

↓

check the engine parameters:
– Check the update of the engine management computer calibration (last calibration).
– Check the conformity of the **IMA** codes (using the **Identification** screen on the **Clip diagnostic tool**).
– Check the charging circuit (see **Technical Note 6014A Checking the charging circuit**)
– To ensure the conformity of the engine speed signal, check:
  – The wiring.
  – The flywheel position and the condition of the flywheel teeth.
  – The position and tightness of the engine speed sensor.
– Check the fuel flow correction from station to station, run **Test 10 Poor injector operation**.

↓

Check the connections and wiring of the injectors.
Check the connections and wiring of the engine management computer to the injectors.
Repair if necessary.

↓

Check the high pressure circuit (external leaks) (see **ALP6 Fuel circuit leaks**).

↓

Check the engine timing (and the position of the high pressure pump sprocket).

↓

Check the lower engine:
– Check the compressions using the **Compression Test** on the **CLIP Technique diagnostic tool**, or the special tool.
– Only check the engine stand if there is noise or excessive vibration when idling.
If the checks are correct, contact the Techline.

AFTER REPAIR	Carry out a road test followed by a complete check with the **diagnostic tool**.

GETtheMANUALS.org

ALP8	Particle filter warning light comes on too often

NOTES	**Before dealing with this customer complaint, check that there are no faults except DF312 Speed request and the conformity (or otherwise) of the "parameters" and "status" using the diagnostic tool.** **Deal with the other faults first.** **If the customer complaint is not eliminated, perform the following checks.**

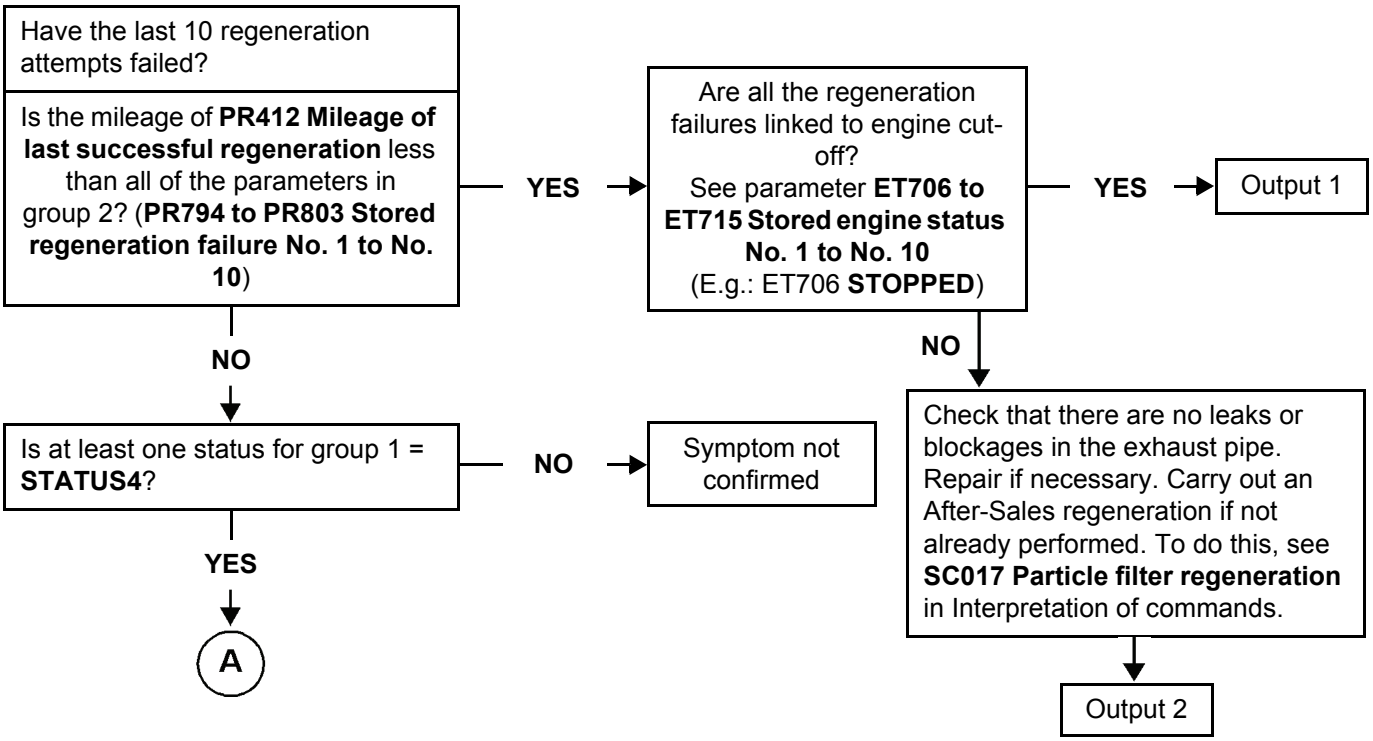

GETtheMANUALS.org

ALP8 CONTINUED 1	

A

Recognition of parameters corresponding to the start of successful regenerations.
Make adjustments to align the parameter groups.

Group 1 Regeneration start record No. 1 to 10
and
Group 2 Regeneration start record No. 1 to 10
For each **group 1** parameter, if there is no **group 2 parameter in the next 30 miles (50 km)**, note that this means a successful regeneration (R). If there is one, this means a failure (e).

B

Note **group 1** here:				Note **group 2** here:	Type of regeneration:
PR816: ____	ET742	____		PR794: _____	PR816: R ☐ E ☐
PR817: ____	ET743	____		PR795: _____	PR817: R ☐ E ☐
PR818: ____	ET744	____		PR796: _____	PR818: R ☐ E ☐
PR819: ____	ET745	____		PR797: _____	PR819: R ☐ E ☐
PR820: ____	ET746	____		PR798: _____	PR820: R ☐ E ☐
PR821: ____	ET747	____		PR799: _____	PR821: R ☐ E ☐
PR822: ____	ET748	____		PR800: _____	PR822: R ☐ E ☐
PR823: ____	ET749	____		PR801: _____	PR823: R ☐ E ☐
PR824: ____	ET750	____		PR802: _____	PR824: R ☐ E ☐
PR825: ____	ET751	____		PR803: _____	PR825: R ☐ E ☐

GETtheMANUALS.org

ALP8

CONTINUED 2

B

Has a parameter from group 1 reached 19660 miles (32768 km)?

YES → C

NO

For each successful regeneration (R), look in group 1 for the next parameter in order of mileage which has a status of **STATUS4**. is there at least one status?

NO → Output 3

YES

Note down the 2 identified parameters and calculate the mileage interval between them using the formula in the table.

(To be calculated for each successful regeneration)
Parameter PR412 = _____
Next parameter at STATUS 4 = _____
Interval
= Next parameter *at STATUS 4* - PR412
= _____ – _____
= _____

Is the calculated interval less than **138 miles (230 km)**?

NO → Output 4

YES

C

GETtheMANUALS.org

ALP8 CONTINUED 3	

C

YES

- Check the consistency between the **IMA** codes read on the **diagnostic tool** and the codes engraved on the injector casings.
- Check that the particle filter differential pressure sensor is correctly positioned and connected **see (MR 402 and 395, Mechanical, 19B, Exhaust, Particle filter pressure sensor: Removal - Refitting)**,
- Check the exhaust system, **see (TEST1 Exhaust system check)**.
- Check the air inlet circuit, **see (TEST3 Air inlet circuit check)**.
- Check the air flowmeter, **see (TEST5 Air flowmeter).**
- Check the turbocharger, **see (TEST5 Variable geometry turbocharger control** and **TEST6 Turbocharger rotating part)**.
- Check the injectors, see **(TEST10 Poor injector operation)**.
- Check the cylinder compressions.

If the fault has not been located and the customer complaint is still present, contact the Techline.

GETtheMANUALS.org

ALP8 CONTINUED 4	

Analysis of output for **ALP8 Particle filter warning light comes on too frequently**

ALP output no.	Output conditions for ALP8	Cause - type of driving	Regeneration frequency	What to tell the customer?
Output 1	The last 10 regeneration attempts failed because the engine was switched off.	Regeneration failures caused by **engine cut-off**.	No regeneration frequency analysis.	Explain to the customer the need to wait until the end of regeneration (warning light goes out) before switching off the engine.
Output 2	The last 10 regeneration attempts failed, but not because the engine cut out.	**Unsuitable driving conditions**	No regeneration frequency analysis.	Explain to the customer the driving criteria for when the warning light comes on.
Output 3	After successful regenerations stored in the memory, the warning light did not come on. No interval can be calculated.	Since the last successful stored regenerations, the driving conditions have not allowed the warning light to come on.	Should be normal	Vehicle correct
Output 4	The interval between a successful regeneration and the particle filter warning light coming on is correct (above the lowest possible values). The system does not have any irregular components.	Unsuitable driving (urban, low speed, etc.)	Normal	Vehicle correct

GETtheMANUALS.org

EXHAUST SYSTEM CHECK	→	**TEST1**
LOW PRESSURE CIRCUIT TEST	→	**TEST2**
TURBOCHARGED AIR INLET CIRCUIT CHECK	→	**TEST3**
AIR FLOW SENSOR	→	**TEST4**
VARIABLE GEOMETRY TURBOCHARGER CONTROL	→	**TEST 5: Apply TEST 4 of Technical Note 3419***
ROTATING SECTION OF A TURBOCHARGER	→	**TEST 6: Apply TEST 7 of Technical Note 3419***
DIESEL FUEL CONFORMITY CHECK	→	**TEST7**
INCORRECT OPERATION OF THE OVERPRESSURE VALVE	→	**TEST8**
POOR INJECTOR OPERATION	→	**TEST10**
TEMPERATURE UPSTREAM OF TURBINE TOO LOW	→	**TEST11**

*: Technical Note 3419: Fault finding of the turbocharger for petrol and diesel engines

GETtheMANUALS.org

TEST1	Exhaust system check

Engine stopped: Check that the silencer outlet is not blocked. Repair or replace the silencer, if necessary.

↓

Check the seal of the exhaust manifold on the contact surface between the turbocharger and the exhaust manifold.
Is the seal in order?

NO → Repair or replace the faulty part.

YES

↓

Loosen the catalytic converter on the turbocharger side.
Place a wooden block between the two parts.
Start the vehicle and check if the engine runs better.
Is the engine running normally?

NO → The exhaust pipe is not the cause of the fault, repeat the engine fault finding (see Customer complaints - Fault finding chart (ALP)).

YES

↓

Retighten the catalytic converter.
Loosen or separate the particle filter on the catalytic converter side. Place a wooden block between the two parts if necessary.
Start the vehicle and check if the engine runs better.
Is the engine running normally?

NO → Replace the catalytic converter.

YES

↓

(A)

GETtheMANUALS.org

TEST1 CONTINUED	

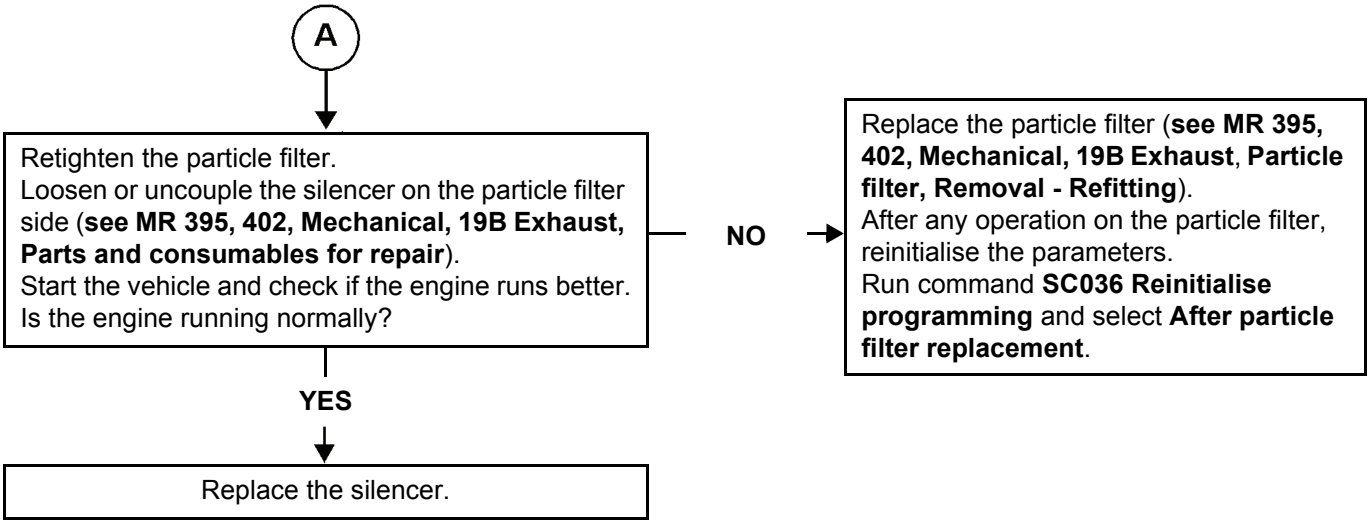

GETtheMANUALS.org

TEST2	Low pressure circuit check

CP3 HIGH PRESSURE PUMP, M9R Engine

Check the fuel filter:
- Conformity of the fuel filter (correct part number and RENAULT filter),
- Positioning and clogging condition of the filter cartridge,
- Positioning and condition of the seals.
- **If there is metal swarf in the filter:**
  Replace the fuel filter, bleed the circuit and **continue the fault finding procedure**.

↓

Supplying the injection system with fuel from an additional tank.
This operation aims to detect possible faults in the low pressure supply system of a vehicle by replacing it entirely with an additional tank.
Mode:
- Disconnect the diesel fuel supply pipe at the fuel filter inlet and seal it with a plug.
- Connect a tube to the fuel filter inlet and insert the other end into a **clean** container which is approximately 5 litres in volume.
- Disconnect the diesel return pipe at the diesel temperature sensor (pump return and injector return join), and block it using a plug.
- Connect a transparent pipe to the union of the diesel temperature sensor, and insert the other end in the container.
- Fill the container with **clean** diesel fuel.
- Start the engine and let the system drain itself of its air (there must not be any air bubbles in the return pipe).

↓

Is the customer complaint still present? — **YES** → If the low pressure circuit is in order, reconnect the various low pressure circuit pipes and repeat the fault finding procedure in the fault finding chart (**ALP 2**) or for the fault which refers to this test.

NO

↓

Are the low pressure circuit connections in order and in good condition? — **NO** → Carry out the necessary repairs.

YES

↓

(A)

GETtheMANUALS.org

TEST2 CONTINUED	

(A)

Check the condition of the priming bulb, and that it is working properly. Perform repairs if necessary and continue the test.

↓

Check the condition of all the low pressure diesel pipes from the tank to the injection pump (in particular no pinching of pipes).

↓

If the fault is still present with a low fuel level, check the consistency of the actual fuel level and that indicated on the instrument panel.
– The transfer pump is supplied via a venturi valve located beneath it.
Check that the opening of the venturi (6 to 8 mm in diameter) is not blocked by dirt contained in the fuel tank.
Check the priming of the low pressure diesel circuit.

↓

Check the conformity of the fuel used by running **test 7 Diesel fuel conformity check**

↓

Low pressure circuit correct.
END OF TEST2.

GETtheMANUALS.org

TEST3	Checking the turbocharged air inlet circuit

Engine stopped: Check the low and high pressure air circuits for **leaks** (air leaks in or out, upstream or downstream of the turbocharger).

→ Check the parts that are abnormally greasy of the circuit and reveal a lack of tightness.
Check:
– the condition and fitting of the ducts (foreign bodies, clogged, disconnected, pinched, broken, holed, cut, tightness of the mounting bolts, etc.).
– the presence, condition and fitting of the seals.
– the present and tightening of the clamps.
– The fitting of the turbocharging pressure sensor.
– The pipes and the take-off point between the air duct and the turbocharging sensor.
Carry out the necessary repairs.

Checking the air filter.

→ Check:
– That the air filter unit inlet and outlet are not blocked.
– The condition and fitting of the air filter unit (disconnected, broken, perforated, etc.).
– The cleanliness, conformity and the absence of deformation of the filter element.
– The air flowmeter: run **test 4 Air flowmeter**.
Carry out the necessary repairs.

← Check:
– the condition of the damper valve.
– the tightness of the mounting bolts,
– cracks in the damper valve.
Carry out the necessary repairs.
Replace if necessary.

→ Check that there is no leak at the exhaust manifold, in particular at the exhaust manifold/turbocharger connection.
Check the exhaust: run **test 1 Exhaust pipe check**.
Carry out the necessary repairs.

↓ A

GETtheMANUALS.org

TEST3 CONTINUED	

A

Carry out a visual inspection of the EGR circuit sealing.
Note: the operating play in the EGR heat exchanger valve shaft produces small black marks due to a slight leak of no importance. Do not replace this part.
Replace if necessary.

Check the condition of the intercooler:
– clogging,
– leaks (vehicle stationary, stabilise the engine speed between 3500 rpm and 4000 rpm and check that there are no leaks).
Replace if necessary.

Check that the turbocharging pressure sensor take-off point is not blocked.
Replace if necessary.
END OF TEST3.

GETtheMANUALS.org

TEST4	Air flowmeter

POLLUTION OF THE GRILLES:
Visual inspection: remove the flow sensor; there must be no foreign bodies in the grilles.
Do not clean the grilles using compressed air or any other procedure: this damages the sensors and creates variations from the values displayed on the CLIP tool.
Check the sealing of the air circuit upstream of the air flowmeter:
disconnected or pierced pipes and air filter unit, seals present.
Replace the air flowmeter if necessary and clean upstream of this, if necessary.

↓

ELECTRICAL COMPONENT BREAKAGE:
Visual inspection:
dismantle the flow sensor, the components should not be broken.
Replace the air flowmeter if necessary.

↓

OXIDATION OF THE ELECTRICAL COMPONENTS:
Visual inspection:
dismantle the air flowmeter, there should not be any green deposits on the electrical components.
Replace the air flowmeter if necessary.

↓

CLOGGING OF THE AIR FLOWMETER:
Test:
– Check the values for conformity:
  * During the first 5 seconds after starting:
  – Coolant temperature: 80°C,
  – Engine speed: idle speed (800 ± 50 rpm);
  – Air flow measurement: 47 kg/h ± 10;
  – OCR* EGR valve: between - 10% and 0%.

* After the starting phase:
  – Coolant temperature: 80°C,
  – Engine speed: idle speed (800 ± 50 rpm);
  – Air flow measurement: 30 kg/h ± 5%;
  – EGR valve OCR*: between 10% and 40%.

– Refer to **DF056 Air flow sensor circuit** 2.def, for the air flow sensor checks.
Replace the air flowmeter if necessary.

* OCR = Opening Cycle Ratio.

GETtheMANUALS.org

TEST4 CONTINUED	

Contamination of the grille

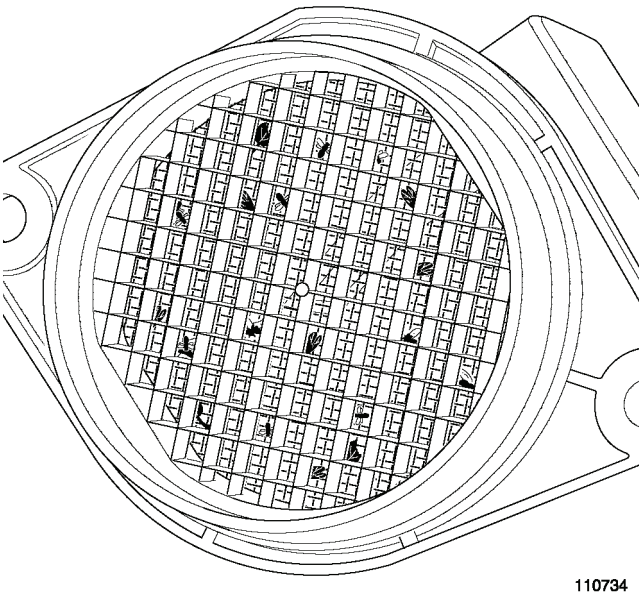

110734

Damage to the electrical sensors

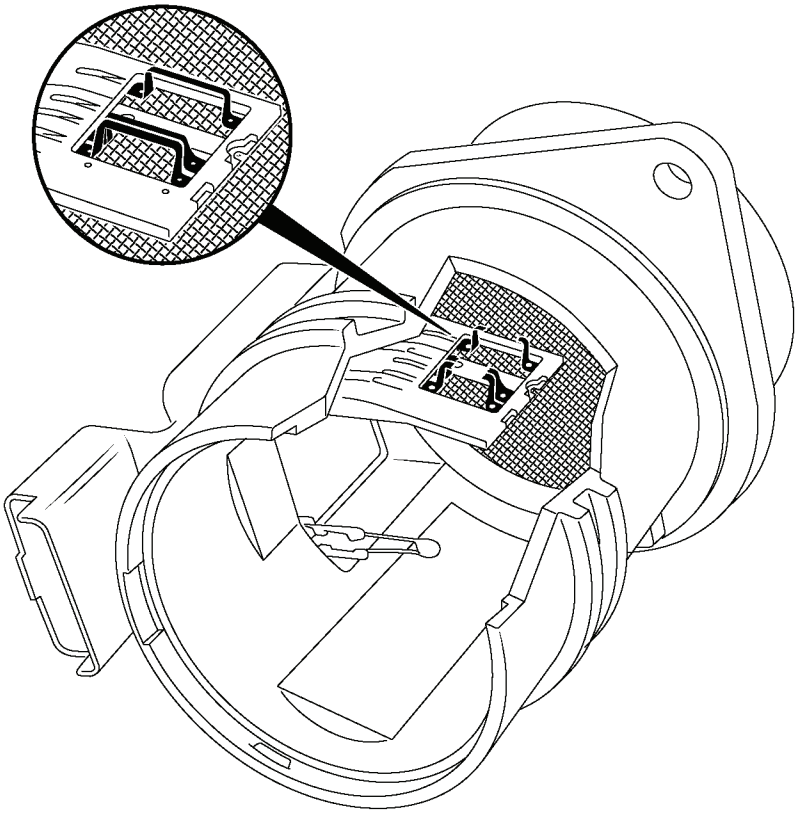

110736

END OF TEST4.

GETtheMANUALS.org

TEST7	Diesel fuel conformity check

WARNING
During this operation, it is essential to:
– refrain from smoking or bringing incandescent objects close to the work area,
– guard against petrol splashes caused by the residual pressure in the pipes,
– wear safety goggles with side guards,
– wear leaktight gloves (Nitrile type).

IMPORTANT
– To avoid any corrosion or damage, protect the areas on which fuel is likely to run.
– To prevent impurities from entering the circuit, place protective plugs on all fuel circuit components exposed to the open air.

Preparations:
Weigh an empty **1300 ml plastic cup (part no. 77 11 171 413)** with its cover **(part no. 77 11 171 416)** using electronic scales such as those used in body paint workshops (example: **PANDA part no. 77 11 224 995**). Record the weight of the empty plastic cup.
This type of plastic cup is used to prepare paint.

Take a **1 l** fuel sample from the **diesel filter outlet** (see **MR339 (Laguna II ph1), Mechanical, 19, Tank, Fuel tank or MR353 (Vel Satis ph1), Mechanical, 19C, Tank, Draining the fuel tank** or **MR395 (Laguna II ph2) or MR402 (Vel Satis ph2), Mechanical, 19C, Tank, Fuel tank: Draining)**, using a pneumatic transfer pump (**part no. 634-200**) and place it in a **1300 ml** plastic cup.
Cover the plastic cup with its cover and let it settle for approximately**2 minutes**.

Is the fuel cloudy or does it separate into two parts?

YES → Presence of water in diesel fuel, the fuel is not compliant.
Drain the fuel circuit, including the tank (see **MR339 (Laguna II ph1), Mechanical, 19, Tank, Fuel tank or MR353 (Vel Satis ph1), Mechanical, 19C, Tank, Draining the fuel tank** or **MR395 (Laguna II ph2) or MR402 (Vel Satis ph2), Mechanical, 19C, Tank, Fuel tank: Draining**).

NO → A

GETtheMANUALS.org

TEST7 CONTINUED 1	

A

Weigh the diesel fuel and note the fuel weight after subtracting the weight of the empty plastic cup and its cover.
Does the fuel weight fall between the minimum and maximum weights given in the table below?

Calculated weight (g.)		Fuel temperature (°C)
Min. weight	Max. weight	
821	846	13
821	846	14
820	845	15
819	844	16
819	844	17
818	843	18
817	842	19
816	841	20
816	841	21
815	840	22
814	839	23
814	839	24
813	838	25

Check the fuel temperature by immersing a thermometer in the plastic cup.

YES

End of test.

NO

The fuel is not correct.
If the fuel weight is less than the minimum value then there is petrol in the diesel fuel.
If the fuel weight is greater than the maximum value then there is oil in the diesel fuel.
Drain the fuel circuit, including the tank (see MR339 (Laguna II ph1), Mechanical, 19, Tank, Fuel tank or MR353 (Vel Satis ph1), Mechanical, 19C, Tank, Draining the fuel tank or MR395 (Laguna II ph2) or MR402 (Vel Satis ph2), Mechanical, 19C, Tank, Fuel tank: Draining).

GETtheMANUALS.org

TEST7 CONTINUED 2	

Note:
If the weight measured reaches the limit values, the measurement can be performed with a **2230 ml plastic cup (part no. 77 11 171 414)** and its cover **(part no. 77 11 171 417):**
- Carry out a quick test drive in order to mix the fuel, then remove **2 l** of fuel.
- Perform the test again and check the results by multiplying the limit values by 2.

Contact the Techline if you have doubts or problems with the customer.

GETtheMANUALS.org

TEST8	Incorrect operation of the overpressure valve

Part 1. Overpressure valve return flow test:

Is the engine working?

YES

NO

– Fit **Mot. 1760** as shown in the tool fitting procedure (see part 2).
– Press the Start button (with card).
– Measure the length travelled by the diesel fuel in the pipes of the **Mot. 1760**.
– Replace the overpressure valve if the diesel length travelled is greater than **10 cm**.

– The overpressure valve fuel return pipe must be fitted to the injector rail.
– Start the engine.
– Set the Clip diagnostic tool to parameter reading mode.
– Raise the temperature of the engine.
– Display parameter **PR063 Fuel temperature**. Increase the diesel temperature to **above 50°C**.
– Switch off the engine.

– Fit **Mot. 1760** as shown in the tool fitting procedure (see part 2).
– View parameter **PR038 Rail pressure**.
– Ask another Cotech to monitor the rise in fuel in the container during engine turnover, as the container will fill up quickly if the overpressure valve is leaking.
– Start the engine.
– Accelerate the engine until the pressure in the rail is **550 bar**:
  – if the engine speed is **less than 3000 rpm**, maintain this pressure,
  – if the engine speed is greater than **3000 rpm**, reduce the engine speed until the rail pressure is **500 bar** and maintain this pressure.
– Maintain these conditions for 1 min.
– Release the accelerator pedal and maintain the idle speed for **10 seconds**.
– Switch off the engine.
– Measure the length of diesel contained in the measuring cylinder.
– Replace the injector rail if the quantity of diesel is greater than **5 ml**.
– Remove **Mot. 1760** as shown in the tool removal procedure (see part 3).

GETtheMANUALS.org

TEST8 CONTINUED 1	

Part 2: Fitting the tool:

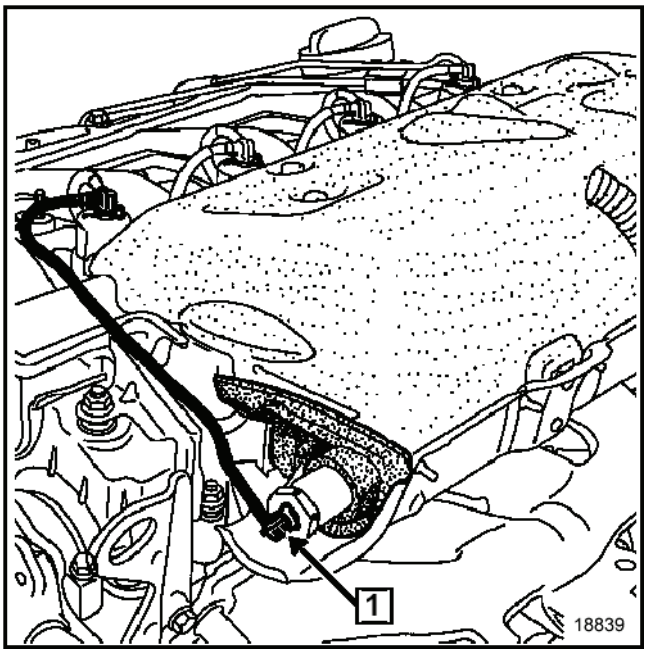

Remove the engine undertray.

Disconnect the overpressure valve fuel return pipe according to the following procedure (**do not remove the clips**):
– press the clip,
– pull vertically on the end piece (**1**) of the fuel return pipe.

IMPORTANT
The end piece is fragile. Be careful not to break it by pulling it too hard. Replace

GETtheMANUALS.org

TEST8 CONTINUED 2	

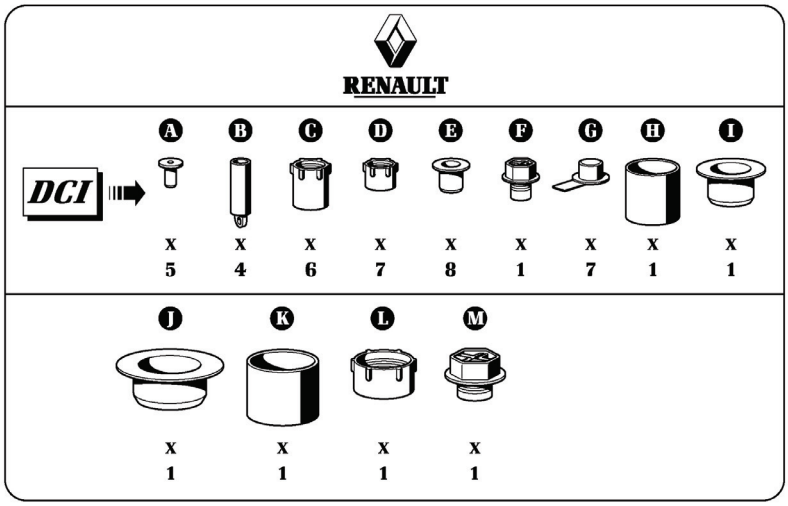

107209

Fit blanking plugs **(B)**, from the kit (part number **77 01 208 209**), on the end pieces of the fuel return pipe. If **Mot. 1760** is not fitted immediately on the overpressure valve, place a blanking plug (**A**) on the overpressure valve fuel return opening.

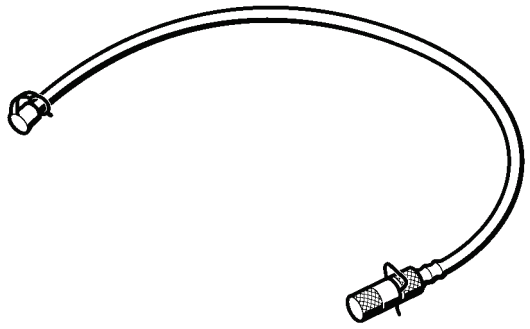

113195

Shown above is the pipe (**Mot. 1760**) with the end piece (**2**) on the right and the plug (**4**) on the left.

Remove the clip and the plug from the end piece (**2**) of the pipe of **Mot. 1760**, leave the plug (**4**) in place.

GETtheMANUALS.org

TEST8 CONTINUED 3	

Connect the pipe of **Mot. 1760** to the rail overpressure valve (without removing the clip on the overpressure valve):
– press down on the clip (**1**) of the overpressure valve,
– insert the end piece (**2**) in the overpressure valve fuel return opening.
– do not forget to fit the end piece plug (**2**) to the overpressure valve fuel return opening using the clip supplied.

Remove the plug (**4**).
Insert the end of the pipe in the measuring cylinder of **Mot. 1760**, the measuring cylinder is taken from **Mot. 1711**.

Measure the return flow (see the procedure in **part 1** of this test).

Part 3: Removing the tool:

IMPORTANT
Use a cleaning cloth (part number **77 11 211 707**) to absorb fuel run-off.

Disconnect the pipe of **Mot. 1760** on the overpressure valve:
– press down on the clip (**1**) of the overpressure valve,
– pull horizontally on the end piece (**2**) of the pipe of **Mot. 1760** while putting a cloth on the end piece (**2**) to avoid the drips.

Lift the end piece (**2**) vertically so that the fuel contained in the pipes flows into the measuring cylinder of **Mot. 1760**.

Remove the plug from the fuel return pipe end piece (**2**).

Connect the complete fuel return pipe to the overpressure valve.

Wipe up any diesel run-off with a cleaning cloth (part number **77 11 211 707**).

GETtheMANUALS.org

TEST 10	Incorrect injector operation

Part A: Fuel regulation balance check for each injector (individual correction):
– In the **CLIP diagnostic tool**, choose the **Fuel circuit** subfunction.
– With the engine idling and the fuel temperature **> 50°C**, display the flow correction values for each injector (individual correction), i.e.:
  – **PR364 Cylinder no. 1 fuel flow correction.**
  – **PR405 Cylinder no. 2 fuel flow correction.**
  – **PR406 Cylinder no. 3 fuel flow correction.**
  – **PR365 Cylinder no. 4 fuel flow correction.**

The **normal value** for injector flow correction is between **-5 mg/st and +5 mg/st**.
Check the **IMA** injector codes, by comparing the **IMA** engraved codes on the injectors (the **IMA** codes are read from left to right) and the **IMA** codes read with the **Clip diagnostic tool**.
– If the **IMA** codes are correct, continue the fault finding procedure,
– If not, modify the incorrect **IMA** codes using command **SC002 Enter injector codes** (see **Interpretation of commands**).

To confirm the repair, refer to **part B** of **test 9**.

CASE No. 1: If at least one of these values is equal to or greater than + 5 mg/st
– Check the valve clearance.
– Check the condition of the engine and the compressions (using the **Clip diagnostic tool** or a compression gauge).
– If the compression test reveals a cylinder fault, carry out the necessary repairs.
– If the compression is correct, check that the injector is fitted correctly (see **MR 364 (Mégane II), 370 (Scénic II), or 395 (Laguna II), Mechanical, 13B, Diesel injection, Diesel injector: Removal - Refitting**)

In particular, check that each injector has one compression washer.
Check the fuel regulation again for each injector (individual correction).
If not, replace the injector and check for the sealing washer. Modify the **IMA** code using command **SC002 Enter injector codes** (see **Interpretation of commands**).
– Run **Part B** of this test to confirm the fault finding procedure.

CASE no. 2: If at least one of these values is less than or equal to - 5 mg/stroke
– Check the valve clearance.
– Check the level and condition of the engine oil.
– Remove the injector with the largest correction.
– If there is diesel fuel contamination, check the condition of the cylinder concerned (cylinder, piston, valves). Use an endoscope if possible.
– Only replace the removed injector, and modify the **IMA** code using command **SC002 Enter injector codes** (see **Interpretation of commands**).
– Run **Part B** of this test to confirm the fault finding procedure.

GETtheMANUALS.org

TEST 10 CONTINUED 1	

CASE No. 3: If at least one of these values does not stabilise (20 seconds after starting).
– Check the low pressure circuit with **test 2 Low pressure circuit check**.
– Check the conformity of the fuel by running **test 7 Diesel fuel conformity check**.
– Run **Part B** of this test to confirm the fault finding procedure.

CASE No. 4: If the fuel flow correction values are all correct (between - 5 mg/st and + 5 mg/st)
Run **Part C** of this test (**Fuel return flow measurement**).

IMPORTANT
For the removal - refitting of the injectors, observe the cleanliness and safety instructions (see **MR 364 (Mégane II), 370 (Scénic II), or 395 (Laguna II), Mechanical, 13B, Diesel injection, Diesel injector: Removal - Refitting**).

Part B: Confirmation of flow correction fault finding for each injector (individual correction):
Clear the faults and perform a test **with the engine idling** for at least **5 minutes**, fuel temperature **> 50 °C**.
Check that no fault appears on the **CLIP diagnostic tool** and that the corrective values do not reach **± 5 mg/stroke** to confirm the repair.
If the customer complaint is still present and the fuel flow correction values are between **-5 mg/st and +5 mg/st**, run **Part A: Fuel regulation balance check for each injector (individual)** of this test **(Case no. 4)**.
If one or more cylinders has an flow correction value for each injector that exceeds **±5 mg/st**, apply **Part A**: **Fuel regulation balance check for each injector (individual)** of this test.

GETtheMANUALS.org

TEST 10 CONTINUED 2	

Part C: Measuring fuel return flow

1 - Fitting the tool:
This part of the test should only be carried out if PR063 "Fuel temperature" is greater than 50°C (see step 2 of part C of this test).
Remove the engine undertray
Disconnect the entire fuel return pipe in accordance with the following procedure (do not remove the clips):
– press the clip,
– pull vertically on the end piece (see arrow) of the fuel return pipe.

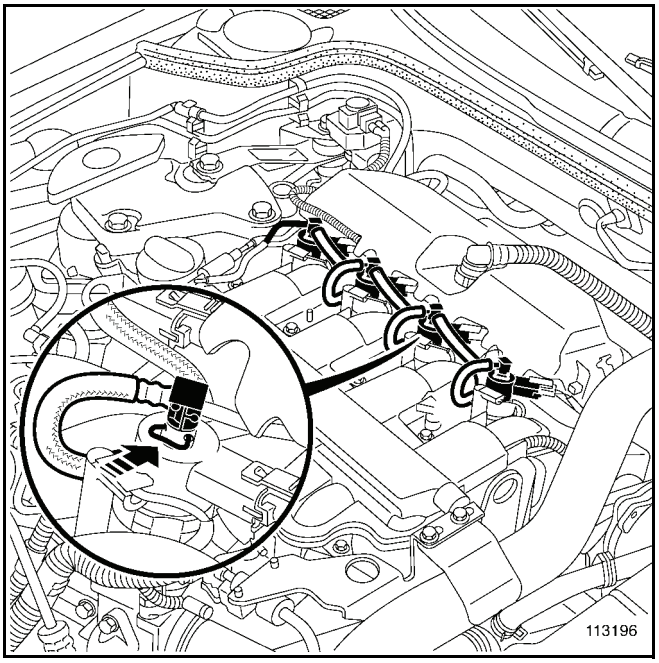

IMPORTANT
The end piece is fragile. Be careful not to break it by pulling it too hard. Replace all removed clips.

GETtheMANUALS.org

TEST 10 CONTINUED 3	

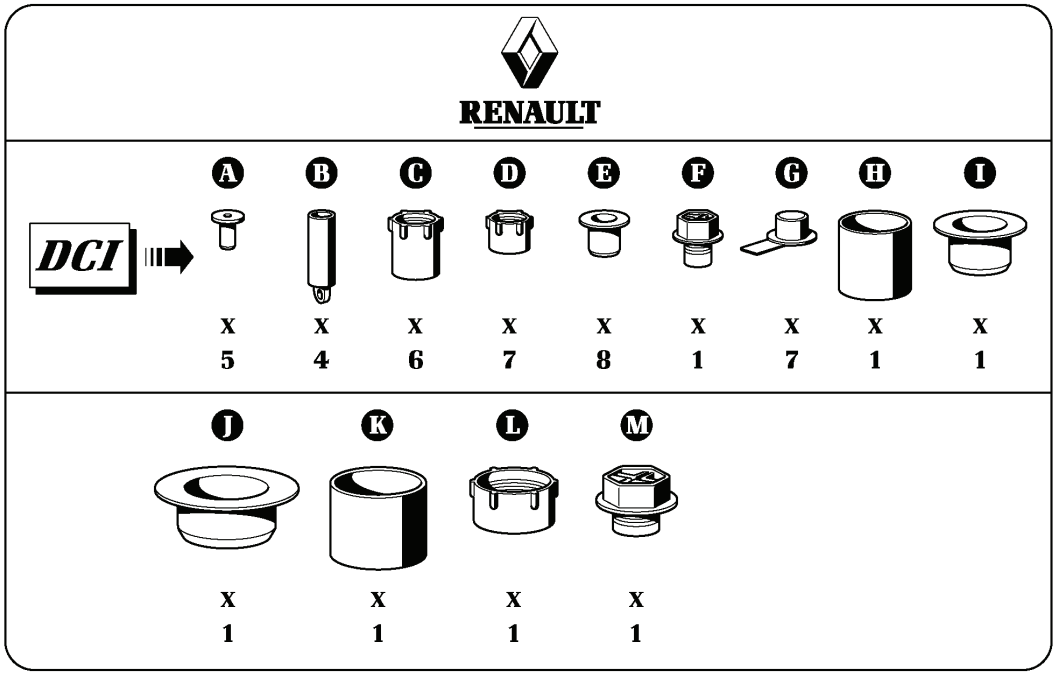

107209

Fit the blanking plugs (**B**), from the kit **(part number 77 01 208 229)**, on the end pieces of the fuel return pipe.
If **mot. 1760** is not fitted immediately on the injectors, put blanking plugs (**A**) on the fuel return openings of the injectors.

GETtheMANUALS.org

TEST 10 CONTINUED 4	

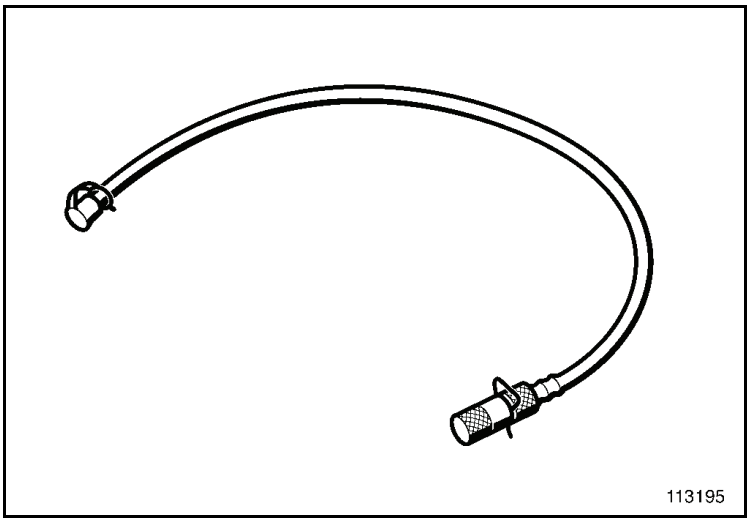

On the pipes of tool **mot. 1760** (see illustration **113195**), remove the clips and the plugs from the end pieces (on the right in the diagram) and leave the plugs (on the left in the diagram) in place.

GETtheMANUALS.org

TEST 10 CONTINUED 5	

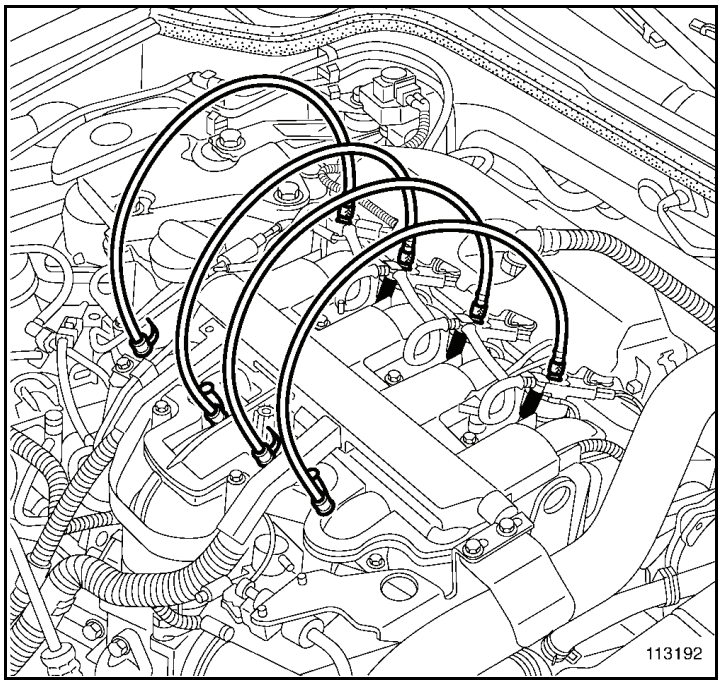

– Connect the pipes of tool **Mot. 1760** to the injectors (without removing the clips on the injectors):
– press on the injector clip,
– insert the end piece in the injector fuel return orifice,
– remember to fit the end piece plugs to the injector fuel return openings with the clips provided,
– remove the plugs left on tool **mot. 1760**

GETtheMANUALS.org

TEST 10 CONTINUED 6	

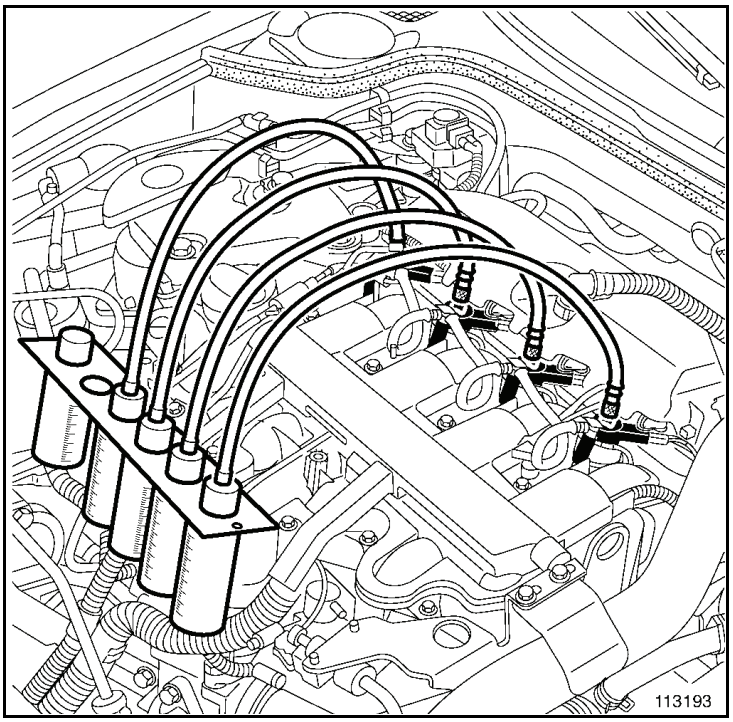

Insert the ends of the pipes into the measuring cylinders of tool **mot. 1760**. The measuring cylinders are taken from tool **mot. 1711.**

GETtheMANUALS.org

TEST 10 CONTINUED 7	

2 - Injector return flow balance check:

Does the engine start? — **NO** →
- Fit **Mot. 1760** as shown in the tool fitting procedure.
- Start the vehicle or do a starting sequence of **15 s** (with ignition key).
- Measure the length travelled by the diesel fuel in the pipes of the **Mot. 1760**.
- Replace the injector if the length travelled by the fuel is more than **10 cm** compared with the average of the other three injectors.

YES ↓

- The injector return pipes must be fitted to the injectors.
- Start the engine.
- Display the **Fuel circuit** sub-function in the **CLIP diagnostic tool**.
- Raise the temperature of the engine.
- Read the diesel fuel temperature with **PR063 Fuel temperature** until a diesel fuel temperature greater than **50°C** is reached
- Switch off the engine.
- Fit **Mot. 1760** as shown in the installation procedure (see step 1).
- Check the value of the **PR038 Rail pressure**.
- Ask another Cotech to monitor the rise in fuel in the cans during engine turnover, as one of the cans will fill up quickly if one of the injectors is leaking.
- Start the engine.
- Accelerate the engine until the pressure in the rail is **550 bar**:
  - if the engine speed is **less than 3000 rpm**, maintain this pressure,
  - if the engine speed is **greater than 3000 rpm**, reduce the engine speed until the rail pressure is **500 bar** and maintain this pressure.
- Maintain these conditions for **1 min**.
- Release the accelerator pedal and maintain the idle speed for **10 seconds**.
- Switch off the engine.
- Measure the quantity of fuel contained in each measuring cylinder.
- Replace the injector if the quantity of diesel fuel is **more than 50 ml**.
- Remove **Mot. 1760** as shown in the tool removal procedure (see step 3).

GETtheMANUALS.org

TEST 10 CONTINUED 8	

3 - Removing the tool:

IMPORTANT
Use a cleaning cloth (**part number 77 11 211 707**) to absorb fuel run-off.

Disconnect the pipe from an injector:
– press on the injector clip,
– pull vertically on the end piece of the pipe of tool **mot. 1760** while putting a cloth on the end piece to avoid drips.
Lift the end piece vertically so that the fuel contained in the pipes flows into the measuring cylinders of tool **mot. 1760**.
Remove the other 3 pipes using the same procedure.
Remove the plug welds from the fuel return pipe end pieces.
Connect the complete fuel return pipe to the injectors.
Wipe up any fuel run-off with a cleaning cloth (part number **77 11 211 707**).

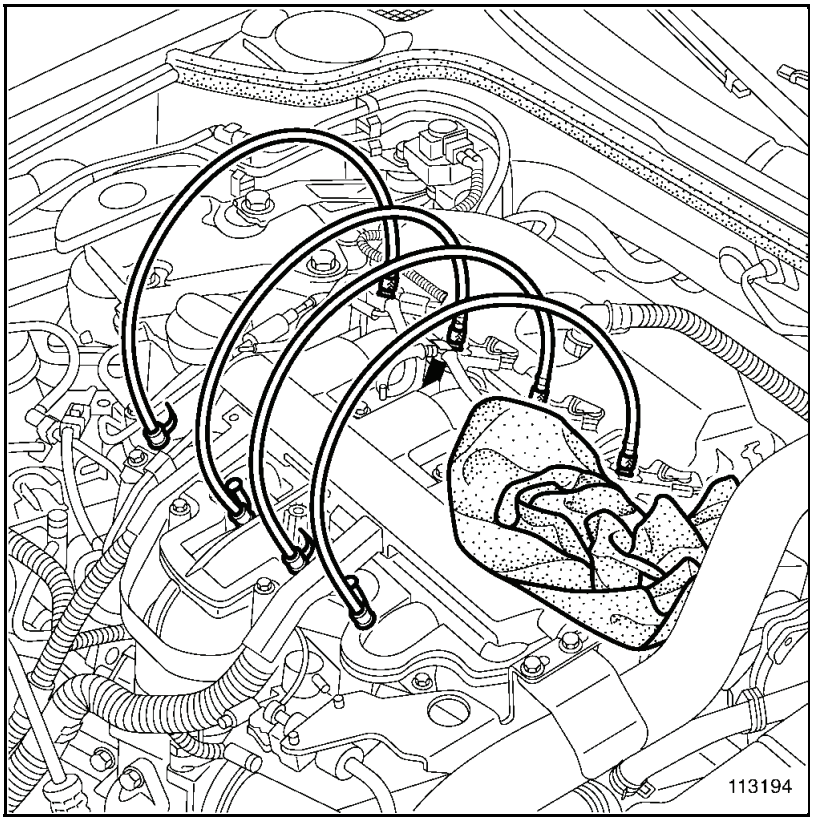

End of test 10.

GETtheMANUALS.org

TEST11	Temperature upstream of turbine too low

Perform full fault finding on the injection computer using the diagnostic tool.
Are there any present or stored faults?

YES → Apply the procedure for dealing with the associated faults.

NO

Apply **test 1 Exhaust pipe check**
Is the exhaust pipe in order?

NO → Repair then carry out another particle filter regeneration.
Run command **SC017 Particle filter regeneration (see Interpretation of commands)**
– If the second regeneration is successful, it is essential to change the engine oil and replace the oil filter.
– If the second regeneration fails, contact the Techline.

YES

Run **test 3 Turbocharged air inlet circuit check**
Is the inlet circuit in order?

NO → Repair then carry out another particle filter regeneration.
Run command **SC017 Particle filter regeneration (see Interpretation of commands)**
– If the second regeneration is successful, it is essential to change the engine oil and replace the oil filter.
– If the second regeneration fails, contact the Techline.

YES

Run **test 4 Air flowmeter**
Is the air flow sensor correct?

NO → Repair then carry out another particle filter regeneration.
Run command **SC017 Particle filter regeneration (see Interpretation of commands)**
– If the second regeneration is successful, it is essential to change the engine oil and replace the oil filter.
– If the second regeneration fails, contact the Techline.

YES

Apply **test 10 Poor injector operation**.
Are the injectors correct?

NO → Repair then carry out another particle filter regeneration.
Run command **SC017 Particle filter regeneration (see Interpretation of commands)**
– If the second regeneration is successful, it is essential to change the engine oil and replace the oil filter.
– If the second regeneration fails, contact the Techline.

YES

Contact the Techline.

GETtheMANUALS.org

VEL SATIS

1 Engine and peripherals

17B PETROL INJECTION

SAGEM 2000 TURBO
Program No.: A5
Vdiag no: 04

Fault finding - Introduction	17B - 1
Fault finding - Fault summary table	17B - 5
Fault finding - Interpretation of faults	17B - 8
Fault finding - Conformity check	17B - 71
Fault finding - Status summary table	17B - 100
Fault finding - Interpretation of statuses	17B - 101
Fault finding - Parameter summary table	17B - 114
Fault finding - Interpretation of parameters	17B - 115
Fault finding - Summary table of commands	17B - 128
Fault finding - Interpretation of commands	17B - 129
Fault finding - Help	17B - 140
Fault finding - Customer complaints	17B - 143
Fault finding - Fault Finding Chart	17B - 144

BJ0E - BJ0J - BJ0K - BJ0M - BJ0P - BJ0V

77 11 311 222 **FEBRUARY 2006** **EDITION ANGLAISE**

"The repair procedures given by the manufacturer in this document are based on the technical specifications current when it was prepared.

The methods may be modified as a result of changes introduced by the manufacturer in the production of the various component units and accessories from which his vehicles are constructed."

All rights reserved by Renault s.a.s.

Copying or translating, in part or in full, of this document or use of the service part reference numbering system is forbidden without the prior written authority of Renault s.a.s.

© Renault s.a.s. 2006

GETtheMANUALS.org

GENERAL APPROACH TO FAULT FINDING

To carry out the "SAGEM 2000 TURBO Vdiag 04" diagnostic test on the injection system, the following are required:

- **The wiring diagram of the function on the vehicle concerned.**
- **Diagnostic tools (Clip).**
- **Multimeter.**
- **Test bornier: Elé. 1590.**

1) Use one of the diagnostic tools to identify the system fitted to the vehicle (read the SAGEM 2000 TURBO Vdiag 04 computer family).

***Note*: If dialogue cannot be established with the computer, go straight to the Customer complaints section and refer to ALP 1: No dialogue with the computer.**

2) Search for fault finding documents corresponding to the system identified.

3) Read the faults stored in the computer memory and use the Interpretation of Faults section of the documents.

Reminder: *the interpretation of a fault should be considered when setting up the diagnostic tool after the engine has been switched off and on again.*
There are two types of interpretation of fault: present faults and stored faults.

- ***If the fault is declared present:***
  carry out fault finding directly.
- ***If the fault is declared stored:***
  follow the notes on the stored fault.
  If the fault does not switch to present, perform the fault finding procedure but do not replace the component.
  In both cases, finish the fault finding procedure by carrying out the instructions in the After Repair section.

GETtheMANUALS.org

4) **Carry out the conformity check *(to highlight possible faults not yet declared by the system's self-test procedure)* and apply the relevant fault finding techniques according to results.**

5) Validation of the repair (elimination of the sections on Customer complaints and Fault finding chart).

6) Use of the sections on Customer complaints and Fault finding chart, if the fault is still present.

IMPORTANT
Never drive the vehicle until having checked that no faults involving the THROTTLE VALVE are present.

CHARACTERISTICS OF THE BORNIER

Bornier Elé. 1590 consists of a 112-track fixed base connected to a printed circuit on which are arranged 112 copper plated areas numbered from 1 to 112.

Using the wiring diagrams, the tracks connecting the component(s) to be tested can be easily identified.

IMPORTANT
*** All checks using the Elé 1590 bornier must be performed with the battery disconnected.**
*** The bornier is designed to be used with an ohmmeter only. Under no circumstances should 12 V be applied to the test points.**

GETtheMANUALS.org

FAULT FINDING LOG

System: Injection

List of monitored parts: ***Computer***

Administrative identification

Date	2 0
Log completed by	
VIN	
Engine	
Diagnostic tool	CLIP
Update version	

Customer complaint

	579	Does not start - fault		570	Stalling - cold starting faults		571	Stalling - hot starting faults
	586	Injection/preheating warning light on		572	Idling - unstable engine speed		574	Bucking/flat spots
	573	Loss of power		520	Abnormal noise, vibrations		576	Smoke - exhaust odours
	569	Starting faults						

Other — Your comments:

Conditions under which the customer complaint occurs

	001	When cold		005	While driving		008	When decelerating
	002	When hot		006	When changing gear		009	Sudden fault
	003	When stationary		007	When accelerating		010	Gradual deterioration
	004	Intermittently						

Other — Your comments:

Documentation used in fault finding

Fault finding procedure used	
Type of diagnostic manual:	Workshop Repair Manual ❑ Technical Note ❑ Assisted fault finding ❑
Fault finding manual no:	
Wiring diagram used	
Wiring Diagram Technical Note No:	
Other documentation	
Title and/or part number:	

RENAULT

FD 01
Fault finding log

FAULT FINDING LOG

System: Injection

GETtheMANUALS.org

Computer identification and parts exchanged for the system

Part 1 part no.	
Part 2 part no.	
Part 3 part no.	
Part 4 part no.	
Part 5 part no.	

To be read with the diagnostic tool (Identification screen):

Computer part no.	
Supplier no.	
Program no.	
Software version	
Calibration no.	
VDIAG	

Faults found with the diagnostic tool

Fault no.	Present	Stored	Fault name	Specification

Conditions under which fault occurs

Status or parameter no.	Parameter name	Value	Unit

System-specific information

Description:

Additional information

What factors led you to replace the computer? What other parts were replaced?	
Other defective functions?	
Your comments:	

RENAULT

FD 01
Fault finding log

GETtheMANUALS.org

Tool fault	Diagnostic tool title
DF001	Coolant temperature sensor circuit
DF002	Air temperature sensor circuit
DF008	Pedal potentiometer gang 1 circuit
DF009	Pedal potentiometer gang 2 circuit
DF037	Engine immobiliser
DF038	Computer
DF040	Cylinder 1 injector circuit
DF041	Cylinder 2 injector circuit
DF042	Cylinder 3 injector circuit
DF043	Cylinder 4 injector circuit
DF081	Canister bleed solenoid valve circuit
DF082	Upstream oxygen sensor heating circuit
DF083	Downstream oxygen sensor heating circuit
DF084	Actuator relay control circuit
DF085	Fuel pump relay control circuit
DF090	Vehicle speed sensor circuit
DF092	Upstream oxygen sensor circuit
DF093	Downstream oxygen sensor circuit
DF095	Throttle potentiometer circuit gang 1
DF096	Throttle potentiometer circuit gang 2
DF123	Pollutant combustion misfires
DF124	Destructive combustion misfires
DF175	Power supply
DF176	Low speed fan unit circuit

GETtheMANUALS.org

Tool fault	Diagnostic tool title
DF177	High speed fan assembly circuit
DF199	Turbocharging pressure sensor
DF232	Refrigerant pressure sensor circuit
DF328	Throttle potentiometer circuit
DF329	Pressure sensor circuit
DF330	Pinking sensor circuit
DF332	Injection connection → Air conditioning
DF336	Flywheel signal information
DF361	Ignition coil 1-4 circuit
DF362	Ignition coil 2-3 circuit
DF390	Oxygen sensor operating fault
DF394	Catalytic converter operating fault
DF398	Fuel circuit operating fault
DF399	Immobiliser code not programmed
DF405	Pedal potentiometer circuit
DF408	Heated windscreen
DF411	Brake pedal sensor circuit
DF412	Accelerator pedal/motorised throttle circuit
DF413	Motorised throttle
DF414	Thermoplunger no. 1 relay control
DF415	Thermoplunger no. 2 relay control
DF437	Engine torque modulation
DF455	Low fuel level signal
DF488	Exhaust air injection operating fault

GETtheMANUALS.org

Tool fault	Diagnostic tool title
DF491	Electronic stability program (ESP)
DF492	Cruise control/speed limiter
DF504	Automatic gearbox
DF547	Air pump relay circuit
DF569	Turbocharging circuit
DF570	Coolant pump relay
DF571	Turbocharging valve
DF582	Pressure consistency
DF586	Instrument panel ↔ injection connection
DF612	Oil vapour anti-icing resistor circuit
DF617	Vacuum pump relay circuit
DF618	Vacuum pump/pressure switch system

GETtheMANUALS.org

DF001 PRESENT OR STORED	COOLANT TEMPERATURE SENSOR CIRCUIT DEF : Unidentified electrical fault

NOTES	**Conditions for applying the fault finding procedure to stored faults:** The fault is declared present after the fan has been activated with the engine running. **IMPORTANT** *If the fault is stored, do not clear it; there may be an **OBD fault** (On Board Diagnostic).* *In the event of a short circuit to + 12 V, there is risk of damage to the component.*

Check **the cleanliness and condition** of the coolant temperature sensor and its connections.
Clean or replace as necessary.

Disconnect the battery.
Disconnect the computer. Check the **cleanliness and condition** of the connections.
Use the bornier to check the **insulation, continuity and the absence of interference resistance** on the following connections:

Computer track F2, connector B → **Coolant temperature sensor, track 2**
Computer track F4, connector B → **Coolant temperature sensor, track 1**

Repair if necessary.

Check **the resistance** of the air temperature sensor (see the values in the **Help** section).
If necessary replace the sensor.

If the fault has still not disappeared, process the other faults and then proceed to the conformity check.

AFTER REPAIR	Follow the instructions to confirm repair: – continue to deal with the fault if it is present, – ignore the fault if it is stored. Deal with any other faults. After carrying out all the tests, clear the stored faults.

GETtheMANUALS.org

DF002 PRESENT OR STORED	AIR TEMPERATURE SENSOR CIRCUIT DEF : Unidentified electrical fault

NOTES	**Conditions for applying the fault finding procedure to stored faults:** The fault is declared present after the fan has been activated with the engine running. **IMPORTANT** *If the fault is stored, do not clear it; there may be an* **OBD fault** *(On Board Diagnostic).* In the event of a short circuit to + 12 V, there is risk of damage to the component.

Check **the cleanliness and condition** of the air temperature sensor and its connections.
Clean or replace as necessary.

Disconnect the battery.
Disconnect the computer. Check the **cleanliness and condition** of the connections.
Use the bornier to check the **insulation, continuity and the absence of interference resistance** on the following connections:

Computer track E3, connector B → Air temperature sensor, track 2
Computer track E2, connector B → Air temperature sensor, track 1

Repair if necessary.

Check **the resistance** of the air temperature sensor (see the values in the **Help** section).
If necessary replace the sensor.

If the fault has still not disappeared, process the other faults and then proceed to the conformity check.

AFTER REPAIR	Follow the instructions to confirm repair: – continue to deal with the fault if it is present, – ignore the fault if it is stored. Deal with any other faults. After carrying out all the tests, clear the stored faults.

GETtheMANUALS.org

DF008 PRESENT OR STORED	PEDAL POTENTIOMETER CIRCUIT GANG 1 CO.0 : Open circuit or short circuit to earth CC.1 : Short circuit to + 12 volts

NOTES	**Conditions for applying the fault finding procedure to stored faults:** The fault appears after the accelerator pedal goes from no load to full load. **IMPORTANT** If the fault is stored, do not clear it; there may be an **OBD fault** (On Board Diagnostic).

Check that the pedal mechanism has not seized.

Check the **cleanliness and condition** of the pedal potentiometer and its connections.
Clean or replace as necessary.

Disconnect the battery.
Disconnect the computer. Check the **cleanliness and condition** of the connections.
Use the bornier to check the insulation, **continuity and the absence of interference resistance** on the following connections:

Computer track H3, connector A → **Pedal potentiometer gang 1, track 2**
Computer track G2, connector A → **Pedal potentiometer gang 1, track 4**
Computer track H2, connector A → **Pedal potentiometer gang 1, track 3**

Repair if necessary.

Check that **track 1** of the pedal potentiometer **correctly follows its resistive curve** (see the values in the **Help** section).
Replace the pedal potentiometer if necessary.

If the fault has still not disappeared, process the other faults and then proceed to the conformity check.

AFTER REPAIR	Follow the instructions to confirm repair: – continue to deal with the fault if it is present, – ignore the fault if it is stored. Deal with any other faults. After carrying out all the tests, clear the stored faults.

GETtheMANUALS.org

DF009 PRESENT OR STORED	PEDAL POTENTIOMETER CIRCUIT GANG 2 CO.0 : Open circuit or short circuit to earth CC.1 : Short circuit to + 12 V.

NOTES	**Conditions for applying the fault finding procedure to stored faults:** The fault appears after the accelerator pedal goes from no load to full load. **WARNING** *If the fault is stored, do not clear it; there may be an **OBD fault** (On Board Diagnostic).*

Check that the pedal mechanism has not seized.

Check the **cleanliness and condition** of the pedal potentiometer and its connections.
Clean or replace as necessary.

Disconnect the battery.
Disconnect the computer. Check the **cleanliness and condition** of the connections.
Use the bornier to check the **insulation, continuity and the absence of interference resistance** on the following connections:

Computer track F4, connector A → Pedal potentiometer gang 2, track 1
Computer track F2, connector A → Pedal potentiometer gang 2, track 5
Computer track F3, connector A → Pedal potentiometer gang 2, track 6

Repair if necessary.

Check that **gang 2** of the pedal potentiometer **correctly follows its resistive curve** (see the values in the **Help** section).
Replace the pedal potentiometer if necessary.

If the fault has still not disappeared, process the other faults and then proceed to the conformity check.

AFTER REPAIR	Follow the instructions to confirm repair: – continue to deal with the fault if it is present, – ignore the fault if it is stored. Deal with any other faults. After carrying out all the tests, clear the stored faults.

GETtheMANUALS.org

DF037 PRESENT OR STORED	ENGINE IMMOBILISER DEF : Unidentified electrical fault

NOTES	**None.**

Test the multiplex network (see 88B, Multiplexing).
If the fault is still present, run fault finding on the Engine immobiliser system (see 82A, Engine immobiliser).

AFTER REPAIR	Deal with any other faults. After carrying out all the tests, clear the stored faults.

GETtheMANUALS.org

DF038 PRESENT	COMPUTER 1.DEF: Computer fault 2.DEF: Computer fault: motorised throttle control 3.DEF: Storage memory area fault 4.DEF: Engine immobiliser memory area fault

NOTES	**None.**

1.DEF **2.DEF**	Computer defective or not to specification. Contact the Techline.

3.DEF **4.DEF**	Use the following procedure: – Switch the ignition on and establish dialogue with the computer. – Clear the computer memory. – Switch the ignition off and wait for loss of dialogue with the computer. – Switch the ignition on and establish dialogue with the computer. If the computer fault is still present, carry out this procedure again. If the computer fault is still present after the fifth clearing attempt, contact the Techline.

AFTER REPAIR	After the computer has been replaced, carry out a road test and check using the diagnostic tool that there are no FAULTS and that STATUSES and PARAMETERS are correct.

GETtheMANUALS.org

DF040 PRESENT OR STORED	CYLINDER 1 INJECTOR CIRCUIT CO : Open circuit CC.0 : Short circuit to earth CC.1 : Short circuit to + 12 V DEF : Unidentified electrical fault

NOTES	***If the faults DF084 Actuator relay control circuit or DF175 Power supply are present or stored, deal with them first.*** **Conditions for applying the fault finding procedure to stored faults:** The fault appears after the engine has been running for a timed period of **10 seconds**.
	WARNING *If the fault is stored, do not clear it; there may be an **OBD fault** (On Board Diagnostic).*

Check **the cleanliness and condition** of the cylinder 1 injector and its connections.
Clean or replace as necessary.

Check, with the ignition on, for **+ 12 V on track 1 of the injector 1 connector.**

Disconnect the battery.
Disconnect the computer. Check the **cleanliness and condition** of the connections.
Use the bornier to check the **insulation, continuity and the absence of interference resistance** on the following connection:

Injection computer track L4, connector B ⟶ Cylinder 1 injector, track 2

Repair if necessary.

Check the **resistance of the cylinder 1 injector** (see the value in the **Help** section).
Replace the injector if necessary.

In the fault is still present, replace the injector.

If the fault has still not disappeared, process the other faults and then proceed to the conformity check.

AFTER REPAIR	Follow the instructions to confirm repair: – continue to deal with the fault if it is present, – ignore the fault if it is stored. Deal with any other faults. After carrying out all the tests, clear the stored faults.

GETtheMANUALS.org

DF041 PRESENT OR STORED	CYLINDER 2 INJECTOR CIRCUIT CO : Open circuit CC.0 : Short circuit to earth CC.1 : Short circuit to + 12 V DEF : Unidentified electrical fault

NOTES	***If the faults DF084 Actuator relay control circuit or DF175 Power supply are present or stored, deal with them first.*** **Conditions for applying the fault finding procedure to stored faults:** The fault appears after the engine has been running for a timed period of **10 seconds**.
	WARNING *If the fault is stored, do not clear it; there may be an **OBD fault** (On Board Diagnostic).*

Check **the cleanliness and condition of the cylinder 2 injector** and its connections.
Clean or replace as necessary.

Check, with the ignition on, for **+ 12 V on track 1 of the injector 2 connector.**

Disconnect the battery.
Disconnect the computer. Check the **cleanliness and condition** of the connections.
Use the bornier to check the **insulation, continuity and the absence of interference resistance** on the following connection:

Injection computer track L3, connector B ⟶ Cylinder 2 injector, track 2

Repair if necessary.

Check the **resistance of the cylinder 2 injector** (see the value in the **Help** section).
Replace the injector if necessary.

In the fault is still present, replace the injector.

If the fault has still not disappeared, process the other faults and then proceed to the conformity check.

AFTER REPAIR	Follow the instructions to confirm repair: – continue to deal with the fault if it is present, – ignore the fault if it is stored. Deal with any other faults. After carrying out all the tests, clear the stored faults.

GETtheMANUALS.org

DF042 PRESENT OR STORED	CYLINDER 3 INJECTOR CIRCUIT CO : Open circuit CC.0 : Short circuit to earth CC.1 : Short circuit to + 12 volts DEF : Unidentified electrical fault

NOTES	***If the faults DF084 Actuator relay control circuit or DF175 Power supply are present or stored, deal with them first.*** **Conditions for applying the fault finding procedure to stored faults:** The fault appears after the engine has been running for a timed period of **10 seconds**. **IMPORTANT** *If the fault is stored, do not clear it; there may be an **OBD fault** (On Board Diagnostic).*

Check **the cleanliness and condition of the cylinder 3 injector** and its connections.
Clean or replace as necessary.

With the ignition switched on, check for **+ 12 V on track 1 of the injector 3 connector**.

Disconnect the battery.
Disconnect the computer. Check the **cleanliness and condition** of the connections.
Use the bornier to check the **insulation, continuity and the absence of interference resistance** on the following connection:

Injection computer track L2, connector B ⟶ Cylinder 3 injector, track 2

Repair if necessary.

Check the **resistance of the cylinder 3 injector** (see the value in the **Help** section).
Replace the injector if necessary.

In the fault is still present, replace the injector.

If the fault has still not disappeared, process the other faults and then proceed to the conformity check.

AFTER REPAIR	Follow the instructions to confirm repair: – continue to deal with the fault if it is present, – ignore the fault if it is stored. Deal with any other faults. After carrying out all the tests, clear the stored faults.

GETtheMANUALS.org

DF043 PRESENT OR STORED	CYLINDER 4 INJECTOR CIRCUIT CO : Open circuit CC.0 : Short circuit to earth CC.1 : Short circuit to + 12 V DEF : Unidentified electrical fault

NOTES	***If the faults DF084 Actuator relay control circuit or DF175 Power supply are present or stored, deal with them first.*** **Conditions for applying the fault finding procedure to stored faults:** The fault appears after the engine has been running for a timed period of **10 seconds**. **IMPORTANT** *If the fault is stored, do not clear it; there may be an **OBD fault** (On Board Diagnostic).*

Check **the cleanliness and condition** of the cylinder 4 injector and its connections.
Clean or replace as necessary.

With the ignition switched on, check for **+ 12 V on track 1 of the injector 4 connector**.

Disconnect the battery.
Disconnect the computer. Check the **cleanliness and condition** of the connections.
Use the bornier to check the **insulation, continuity and the absence of interference resistance** on the following connection:

Injection computer track M2, connector B ⟶ **Cylinder 4 injector, track 2**

Repair if necessary.

Check the **resistance of the cylinder 4 injector** (see the value in the **Help** section).
Replace the injector if necessary.

In the fault is still present, replace the injector.

If the fault has still not disappeared, process the other faults and then proceed to the conformity check.

AFTER REPAIR	Follow the instructions to confirm repair: – continue to deal with the fault if it is present, – ignore the fault if it is stored. Deal with any other faults. After carrying out all the tests, clear the stored faults.

GETtheMANUALS.org

DF081 PRESENT OR STORED	CANISTER BLEED SOLENOID VALVE CIRCUIT CO.0 : Open circuit or short circuit to earth CC.1 : Short circuit to + 12 V DEF : Unidentified electrical fault

NOTES	***If the faults DF084 Actuator relay control circuit or DF175 Power supply are present or stored, deal with them first.*** **Conditions for applying the fault finding procedure to stored faults:** The fault is declared present after the ignition has been switched on.
	IMPORTANT *If the fault is stored, do not clear it; there may be an **OBD fault** (On Board Diagnostic).*

Check **the cleanliness and condition** of the fuel vapour absorber bleed solenoid valve and its connections.
Clean or replace as necessary.

With the ignition on, check for **+ 12 V** on the fuel vapour absorber bleed solenoid valve.
Repair if necessary.

Disconnect the battery.
Disconnect the computer. Check the **cleanliness and condition** of the connections.
Use the bornier to check the **insulation, continuity and the absence of interference resistance** on the following connection:

Computer track E1, connector C ⟶ **Fuel vapour absorber bleed valve, track 2**

Repair if necessary.

Check the **resistance** of the fuel vapour absorber bleed solenoid valve (see value in the **Help** section).
Replace the fuel vapour absorber bleed solenoid valve if necessary.

If the fault has still not disappeared, process the other faults and then proceed to the conformity check.

AFTER REPAIR	Follow the instructions to confirm repair: – continue to deal with the fault if it is present, – ignore the fault if it is stored. Deal with any other faults. After carrying out all the tests, clear the stored faults.

GETtheMANUALS.org

DF082 PRESENT OR STORED	UPSTREAM OXYGEN SENSOR HEATING CIRCUIT CO.0 : Open circuit or short circuit to earth CC.1 : Short circuit to + 12 V DEF : Unidentified electrical fault 1.DEF: Oxygen sensor heater power not correct

NOTES	***If the faults DF084 Actuator relay control circuit or DF175 Power supply are present or stored, deal with them first.*** **Conditions for applying the fault finding procedure to stored faults:** The fault appears after the engine has been running for a timed period of **10 seconds**.
	IMPORTANT *If the fault is stored, do not clear it; there may be an **OBD fault** (On Board Diagnostic).*

Check the **cleanliness and condition** of the upstream oxygen sensor and its connections.
Clean or replace as necessary.

Check for the **+ 12 V feed on track A** of the upstream oxygen sensor connector with the ignition on.
Repair if necessary.

Disconnect the battery.
Disconnect the computer. Check the **cleanliness and condition** of the connections.
Use the bornier to check the **insulation, continuity and the absence of interference resistance** on the following connection:

Computer track G1, connector C ⟶ **Upstream oxygen sensor, track B**

Repair if necessary.

Check the heating **resistance** of the upstream oxygen sensor (see the value in the **Help** section).
Replace the upstream oxygen sensor if necessary.

If the fault has still not disappeared, process the other faults and then proceed to the conformity check.

AFTER REPAIR	Follow the instructions to confirm repair: – continue to deal with the fault if it is present, – ignore the fault if it is stored. Deal with any other faults. After carrying out all the tests, clear the stored faults.

GETtheMANUALS.org

DF083 PRESENT OR STORED	DOWNSTREAM OXYGEN SENSOR HEATING CIRCUIT CO.0 : Open circuit or short circuit to earth CC.1 : Short circuit to + 12 volts DEF : Unidentified electrical fault 1.DEF: Oxygen sensor heater power not correct

NOTES	***If the faults DF084 Actuator relay control circuit or DF175 Power supply are present or stored, deal with them first.*** **Conditions for applying the fault finding procedure to stored faults:** The fault appears after the engine has been running for a timed period of **10 seconds**.
	IMPORTANT *If the fault is stored, do not clear it; there may be an **OBD fault** (On Board Diagnostic).*

Check **the cleanliness and condition** of the downstream oxygen sensor and its connections.
Clean or replace as necessary.

Check for **+ 12 V feed** on track A of the downstream oxygen sensor connector with the ignition on.
Repair if necessary.

Disconnect the battery.
Disconnect the computer. Check the **cleanliness and condition** of the connections.
Use the bornier to check the **insulation, continuity and the absence of interference resistance** on the following connection:

Computer track G3, connector C ⟶ **Downstream oxygen sensor, track B**

Repair if necessary.

Check the heating **resistance** of the downstream oxygen sensor (see the value in the **Help** section).
Replace the downstream oxygen sensor if necessary.

If the fault has still not disappeared, process the other faults and then proceed to the conformity check.

AFTER REPAIR	Follow the instructions to confirm repair: – continue to deal with the fault if it is present, – ignore the fault if it is stored. Deal with any other faults. After carrying out all the tests, clear the stored faults.

GETtheMANUALS.org

DF084 PRESENT OR STORED	ACTUATOR CONTROL RELAY CIRCUIT CC.1 : Short circuit to + 12 V

NOTES	**Conditions for applying the fault finding procedure to stored faults:** The fault is declared present after the ignition has been switched on.

Check the **condition and cleanliness** of the vehicle's battery and earth leads. Repair if necessary.
Check **the two supply fuses** of the actuator relays. Replace if necessary.
Check **the cleanliness and condition** of the actuator relay and its connections. Clean or replace as necessary.
Check **the resistance** of the actuator relay across **tracks 1 and 2** (see the value in the **Help** section). Replace the actuator relay, if necessary.
Check for **12 V on track 1** of the actuator relay, connector end. Repair if necessary.
Disconnect the battery. Disconnect the computer. Check the **cleanliness and condition** of the connections. Use the bornier to check the **insulation, continuity and the absence of interference resistance** on the following connection: **Injection computer track D4, connector B ⟶ Actuator relay, track 2** Repair if necessary.
If the fault persists, replace the actuator relay.
If the fault has still not disappeared, process the other faults and then proceed to the conformity check.

AFTER REPAIR	Follow the instructions to confirm repair: – continue to deal with the fault if it is present, – ignore the fault if it is stored. Deal with any other faults. After carrying out all the tests, clear the stored faults.

GETtheMANUALS.org

DF085 PRESENT OR STORED	FUEL PUMP CONTROL RELAY CIRCUIT CO.0 : Open circuit or short circuit to earth CC.1 : Short circuit to + 12 volts DEF : Unidentified electrical fault

NOTES	***If the faults DF084 Actuator relay control circuit or DF175 Power supply are present or stored, deal with them first.*** **Conditions for applying the fault finding procedure to stored faults:** The fault is declared present after the ignition has been switched on.
	IMPORTANT *If the fault is stored, do not clear it; there may be an **OBD fault** (On Board Diagnostic).*

Check **the supply fuse** of the fuel pump relay.
Replace the fuse if necessary.

Disconnect the relay.
Check the **cleanliness and condition** of the fuel pump relay and its connections.
Clean or replace as necessary.

With the ignition on, check for **+ 12 V on track 1** of the fuel pump relay, connector end.
Repair if necessary.

Check **the resistance** of the fuel pump relay on **tracks 1 and 2.**
(See the value in the **Help** section).
Replace the fuel pump relay if necessary.

Disconnect the battery.
Disconnect the computer. Check the **cleanliness and condition** of the connections.
Use the bornier to check the **insulation, continuity and the absence of interference resistance** on the following connection:

Computer track D1, connector C ⟶ **Fuel pump relay, track 2**

Repair if necessary.

If the fault has still not disappeared, process the other faults and then proceed to the conformity check.

AFTER REPAIR	Follow the instructions to confirm repair: – continue to deal with the fault if it is present, – ignore the fault if it is stored. Deal with any other faults. After carrying out all the tests, clear the stored faults.

GETtheMANUALS.org

DF090 PRESENT OR STORED	VEHICLE SPEED SENSOR CIRCUIT DEF : Unidentified electrical fault

NOTES	**IMPORTANT** *If the fault is stored, do not clear it; there may be an **OBD fault** (On Board Diagnostic).*

Test the multiplex network (see 88B, Multiplexing).

If the fault persists, perform a fault finding test on the ESP/ABS systems.

(see 38C, Anti-lock braking system.)

AFTER REPAIR	Deal with any other faults. After carrying out all the tests, clear the stored faults.

GETtheMANUALS.org

DF092 PRESENT OR STORED	UPSTREAM OXYGEN SENSOR CIRCUIT DEF : Unidentified electrical fault

NOTES	***If faults DF084 Actuator relay control circuit, DF082 Upstream oxygen sensor heating circuit or DF175 Power supply are present, deal with them first.*** **Conditions for applying the fault finding procedure to stored faults:** The fault is declared present with the engine running after **5 minutes** in richness regulation.
	IMPORTANT *If the fault is stored, do not clear it; there may be an **OBD fault** (On Board Diagnostic).*

Check **the cleanliness and condition** of the upstream oxygen sensor connections.
Clean or replace as necessary.

With the ignition on, check for **+ 12 Volts** on the upstream oxygen sensor.
Repair if necessary.

Disconnect the battery.
Disconnect the computer. Check the **cleanliness and condition** of the connections.
Use the bornier to check the **insulation, continuity and the absence of interference resistance** on the following connections:

Computer track C1, connector C ⟶ Oxygen sensor, track D
Computer track B1, connector C ⟶ Oxygen sensor, track C

Repair if necessary.

If the fault has still not disappeared, process the other faults and then proceed to the conformity check.

AFTER REPAIR	Follow the instructions to confirm repair: – continue to deal with the fault if it is present, – ignore the fault if it is stored. Deal with any other faults. After carrying out all the tests, clear the stored faults.

GETtheMANUALS.org

DF093 PRESENT OR STORED	DOWNSTREAM OXYGEN SENSOR CIRCUIT DEF : Unidentified electrical fault

NOTES	***If faults DF084 Actuator relay control circuit, DF175 Power supply or DF083 Downstream oxygen sensor heating circuit are present, deal with them first.*** **Conditions for applying the fault finding procedure to stored faults.** The fault is declared as present in one of the following cases: – A road test driving smoothly after the fan has come into operation and the double richness ratio loop **ET056** is active. – A road test driving smoothly after the fan has come into operation, followed immediately by a road test on a slope in no load conditions (deceleration phase). **IMPORTANT** *If the fault is stored, do not clear it; there may be an **OBD fault** (On Board Diagnostic).*

Check **the cleanliness, connection and condition** of the downstream oxygen sensor connections.
Clean or replace as necessary.

With the ignition on, check for **+ 12 Volts** on the downstream oxygen sensor.
Repair if necessary.

Disconnect the battery.
Disconnect the computer. Check the **cleanliness and condition** of the connections.
Use the bornier to check the **insulation, continuity and the absence of interference resistance** on the following connections:

Computer track A2, connector C → Oxygen sensor, track C
Computer track B2, connector C → Oxygen sensor, track D

Repair if necessary.

If the fault has still not disappeared, process the other faults and then proceed to the conformity check.

AFTER REPAIR	Follow the instructions to confirm repair: – continue to deal with the fault if it is present, – ignore the fault if it is stored. Deal with any other faults. After carrying out all the tests, clear the stored faults.

GETtheMANUALS.org

DF095 PRESENT OR STORED	THROTTLE POTENTIOMETER CIRCUIT GANG 1 CO.0 : Open circuit or short circuit to earth CC.1 : Short circuit to + 12 V

NOTES	**SAFETY INSTRUCTION:** **never drive the vehicle until having checked that no faults involving the throttle valve are present.**
	Conditions for applying the fault finding procedure to stored faults: The fault appears after a change in the engine speed.
	IMPORTANT *If the fault is stored, do not clear it; there may be an **OBD fault** (On Board Diagnostic).*

Check the **cleanliness and condition** of the throttle potentiometer and its connections.
Clean or replace as necessary.

Disconnect the battery.
Disconnect the computer. Check the **cleanliness and condition** of the connections.
Use the bornier to check the **insulation, continuity and the absence of interference resistance** on the following connections:

Computer track G4, connector B → Throttle potentiometer gang 1, track 1
Computer track G3, connector B → Throttle potentiometer gang 1, track 2
Computer track G2, connector B → Throttle potentiometer gang 1, track 5

Repair if necessary.

Check **the cleanliness** of the throttle, and **correct rotation** of the throttle valve.
Check that **gang 1** of the throttle potentiometer **correctly follows its resistive curve** (see the values in the **Help** section).
Replace the throttle valve if necessary.

If the fault has still not disappeared, process the other faults and then proceed to the conformity check.

AFTER REPAIR	Follow the instructions to confirm repair: – continue to deal with the fault if it is present, – ignore the fault if it is stored. Deal with any other faults. After carrying out all the tests, clear the stored faults.
	If the throttle valve has been replaced, reinitialise the programming (RZ019 Reinitialising programming).

GETtheMANUALS.org

DF096 PRESENT OR STORED	THROTTLE POTENTIOMETER CIRCUIT GANG 2 CO.0 : Open circuit or short circuit to earth CC.1 : Short circuit to + 12 V

NOTES	**SAFETY INSTRUCTION:** **never drive the vehicle until having checked that no faults involving the throttle valve are present.**
	Conditions for applying the fault finding procedure to stored faults: The fault appears after a change in the engine speed.
	IMPORTANT *If the fault is stored, do not clear it; there may be an **OBD fault** (On Board Diagnostic).*

Check the **cleanliness and condition** of the throttle potentiometer and its connections.
Clean or replace as necessary.

Disconnect the battery.
Disconnect the computer. Check the **cleanliness and condition** of the connections.
Use the bornier to check the insulation, **continuity and the absence of interference resistance** on the following connections:

Computer track D3, connector B ⟶ Throttle potentiometer gang 2, track 6
Computer track G2, connector B ⟶ Throttle potentiometer gang 2, track 5
Computer track G4, connector B ⟶ Throttle potentiometer gang 2, track 1

Repair if necessary.

Check **the cleanliness** of the throttle, and **correct rotation** of the throttle valve.
Check that **track 2** of the throttle potentiometer **correctly follows its resistive curve** (see the values in the **Help** section).
Replace the throttle valve if necessary.

If the fault has still not disappeared, process the other faults and then proceed to the conformity check.

AFTER REPAIR	Follow the instructions to confirm repair: – continue to deal with the fault if it is present, – ignore the fault if it is stored. Deal with any other faults. After carrying out all the tests, clear the stored faults.
	If the throttle valve has been replaced, reinitialise the programming (RZ019 Reinitialising programming).

GETtheMANUALS.org

DF123 PRESENT OR STORED	POLLUTANT MISFIRES

NOTES	***Deal first with faults relating to the petrol supply system, the ignition or the flywheel sensor.*** **Refer to statuses ET057 Misfiring on cylinder 1, ET058 Misfiring on cylinder 2, ET059 Misfiring on cylinder 3 and ET060 Misfiring on cylinder 4 to find the cylinder or cylinders with combustion misfires.**

Misfiring on one cylinder	The fault is due to a component that can only affect one cylinder: – Check the injector of the cylinder concerned. – Check the condition and conformity of the spark plugs. – Check the pencil coil of the cylinder concerned. – Check the cylinder compression – Check the valve setting.
Misfiring on cylinders 1 and 4 or 2 and 3	The fault is due to a component that affects a pair of cylinders: – Check the ignition coil circuit concerned. To do this, apply the fault finding procedure **DF361 Ignition coil 1-4 circuit, DF362 Ignition coil 2-3 circuit** – Check the condition and conformity of the spark plugs.
Misfiring on all four cylinders	The fault is due to a component affecting all the cylinders at once: – Check that the correct fuel is being used, – Check the condition and conformity of the spark plugs.

If the fault is still present, carry out the following checks:
– Check the flywheel sensor.
– Check the condition and cleanness of the flywheel.
– Check the mounting of the flywheel sensor.
– Check the Sensor/Flywheel air gap.
– Check the whole petrol supply circuit.
– Check the whole ignition system.
– Check the hydraulic tappets if there is camshaft noise.
– Check the pinking sensor fitting.

AFTER REPAIR	Check that all faults have been dealt with. After carrying out all the tests, clear the stored faults. It is not necessary to clear the programming. Checking that the system has been properly repaired: – No remaining electrical faults. – Programming should have been carried out. – The engine should be warm (minimum **75 °C**). – Run the engine at idle speed with all electrical consumers drawing power for **15 minutes**. If the fault reappears, continue the fault finding procedure.

GETtheMANUALS.org

DF124 PRESENT OR STORED	DESTRUCTIVE MISFIRE

NOTES	***Deal first with faults relating to the petrol supply system, the ignition or the flywheel sensor.*** **Refer to statuses ET057 Misfiring on cylinder 1, ET058 Misfiring on cylinder 2, ET059 Misfiring on cylinder 3 and ET060 Misfiring on cylinder 4 to find out how many cylinders have combustion misfires.**

Misfiring on one cylinder	The fault is due to a component that can only affect one cylinder: – Check the injector of the cylinder concerned. – Check the condition and conformity of the spark plugs. – Check the pencil coil of the cylinder concerned. – Check the cylinder compression – Check the valve setting.
Misfiring on cylinders 1 and 4 or 2 and 3	The fault is due to a component that affects a pair of cylinders: – Check the ignition coil circuit concerned. To do this, apply the fault finding procedure **DF361 Ignition coil 1-4 circuit, DF362 Ignition coil 2-3 circuit** – Check the condition and conformity of the spark plugs.
Misfiring on all four cylinders	The fault is due to a component affecting all the cylinders at once: – Check that the correct fuel is being used, – Check the condition and conformity of the spark plugs.

If the fault is still present, carry out the following checks:
– Check the flywheel sensor.
– Check the condition and cleanness of the flywheel.
– Check the mounting of the flywheel sensor.
– Check the Sensor/Flywheel air gap.
– Check the whole petrol supply circuit.
– Check the whole ignition system.
– Check the hydraulic tappets if there is camshaft noise.
– Check the pinking sensor fitting.

AFTER REPAIR	Check that all faults have been dealt with. After carrying out all the tests, clear the stored faults. It is not necessary to clear the programming. Checking that the system has been properly repaired: – No remaining electrical faults. – Programming should have been carried out. – The engine should be warm (minimum **75 °C**). – Run the engine at idle speed with all electrical consumers drawing power for **15 minutes**. If the fault reappears, continue the fault finding procedure.

GETtheMANUALS.org

DF175 PRESENT OR STORED	SUPPLY DEF : + 12 volts electrical fault after actuator relay

NOTES	***If fault DF084 Actuator relay control circuit is present, deal with it first.*** **Conditions for applying the fault finding procedure to stored faults:** The fault appears after: – the ignition is switched off and dialogue is lost, – the ignition is switched on and dialogue is established.

Disconnect the actuator relay.
Check **the cleanliness and condition** of the actuator relay and its connections.
Clean or replace as necessary.

With the ignition on, check for **12 V on track 3** of the actuator relay.
If **12 volts** is not present, check the supply fuse.
Check the insulation and continuity of the wire.

Check **the resistance** of the actuator relay across **tracks 1 and 2** (see the value in the **Help** section).
Replace the relay if necessary.

Disconnect the battery.
Disconnect the computer. Check the **cleanliness and condition** of the connections.
Use the bornier to check the **insulation, continuity and the absence of interference resistance** on the following connection:

Computer track G2, connector C ⟶ **Injection actuator relay, track 5**

Repair if necessary.

If that does not work, replace the actuator relay.

If the fault has still not disappeared, process the other faults and then proceed to the conformity check.

AFTER REPAIR	Follow the instructions to confirm repair: – continue to deal with the fault if it is present, – ignore the fault if it is stored. Deal with any other faults. After carrying out all the tests, clear the stored faults.

GETtheMANUALS.org

DF176 PRESENT OR STORED	LOW-SPEED FAN UNIT CIRCUIT CO.0 : Open circuit or short circuit to earth CC.1 : Short circuit to + 12 V DEF : Unidentified electrical fault

NOTES	***If fault DF001 Coolant temperature sensor circuit is present, deal with it first.*** **Conditions for applying the fault finding procedure to stored faults:** The fault is declared present after the cooling system temperature has reached between **99 °C** and **101 °C**.

Check **the cleanliness and condition** of the low-speed fan relay and its connections. Clean or replace as necessary.
With the ignition on, check for **+ 12 V on track 1** of the relay. Repair if necessary.
Check **the resistance** of the low-speed fan relay across **tracks 1 and 2** (see the value in the **Help** section). Replace the low-speed fan relay if necessary.
Disconnect the battery. Disconnect the computer. Check the **cleanliness and condition** of the connections. Use the bornier to check the **insulation, continuity and the absence of interference resistance** on the following connection: **Computer connector C track F1** ⟶ **Low-speed fan assembly relay, track 2** Repair if necessary.
If the fault has still not disappeared, process the other faults and then proceed to the conformity check.

AFTER REPAIR	Follow the instructions to confirm repair: – continue to deal with the fault if it is present, – ignore the fault if it is stored. Deal with any other faults. After carrying out all the tests, clear the stored faults.

GETtheMANUALS.org

DF177 PRESENT OR STORED	HIGH-SPEED FAN UNIT CIRCUIT CO.0 : Open circuit or short circuit to earth CC.1 : Short circuit to + 12 V DEF : Unidentified electrical fault

NOTES	***If fault DF001 Coolant temperature sensor circuit is present, deal with it first.*** **Conditions for applying the fault finding procedure to stored faults:** The fault is declared present after the temperature of the cooling system has reached **103 °C**.

Check **the cleanliness and condition** of the high-speed fan relay and its connections. Clean or replace as necessary.
With the ignition on, check for **+ 12 V on track 1** of the relay. Repair if necessary.
Check **the resistance** of the high-speed fan relay across **tracks 1 and 2** (see the value in the **Help** section). Replace the high-speed fan relay if necessary.
Disconnect the battery. Disconnect the computer. Check the **cleanliness and condition** of the connections. Use the bornier to check the **insulation, continuity and the absence of interference resistance** on the following connection: **Computer track F2, connector C ⟶ High-speed fan assembly relay, track 2** Repair if necessary.
If the fault has still not disappeared, process the other faults and then proceed to the conformity check.

AFTER REPAIR	Follow the instructions to confirm repair: – continue to deal with the fault if it is present, – ignore the fault if it is stored. Deal with any other faults. After carrying out all the tests, clear the stored faults.

GETtheMANUALS.org

DF199 PRESENT OR STORED	TURBOCHARGING PRESSURE SENSOR DEF : Unidentified electrical fault

NOTES	***If faults DF084 Actuator relay control circuit, DF175 Power supply, DF569 Turbocharging circuit or DF571 Turbocharging valve are present, deal with them first.*** **Conditions for applying the fault finding procedure to stored faults:** The fault appears after: – the ignition is switched off and dialogue is lost, – the ignition has been switched on again and dialogue re-established, – a **10 second** delay at idle speed.
	IMPORTANT *If the fault is stored, do not clear it; there may be an **OBD fault** (On Board Diagnostic).*

Check **the cleanliness and condition** of the turbocharging pressure sensor and its connections.
Clean or replace as necessary.

Disconnect the battery.
Disconnect the computer. Check the **cleanliness and condition** of the connections.
Use the bornier to check the insulation, **continuity and the absence of interference resistance** on the following connections:

Computer track E1, connector B ⟶ Pressure sensor, track 2 or A
Computer track F1, connector B ⟶ Pressure sensor, track 3 or B
Computer track G1, connector B ⟶ Pressure sensor, track 1 or C

(See the connector track numbers on the corresponding wiring diagram).
Repair if necessary.

If the fault has still not disappeared, process the other faults and then proceed to the conformity check.

AFTER REPAIR	Follow the instructions to confirm repair: – continue to deal with the fault if it is present, – ignore the fault if it is stored. Deal with any other faults. After carrying out all the tests, clear the stored faults.

GETtheMANUALS.org

DF232 PRESENT OR STORED	REFRIGERANT PRESSURE SENSOR CIRCUIT DEF : Unidentified electrical fault

NOTES	**None.**

Test the multiplex network (see 88B, Multiplexing).

If the fault is not solved, run fault finding on the air conditioning system (see 62A, Air conditioning, 62B, Climate control or 62C, Non regulated climate control).

AFTER REPAIR	Deal with any other faults. After carrying out all the tests, clear the stored faults.

GETtheMANUALS.org

DF328 PRESENT OR STORED	THROTTLE POTENTIOMETER CIRCUIT 1.DEF: Consistency between gang 1 and gang 2

NOTES	**SAFETY ADVICE:** **Never drive the vehicle without having made sure that there are no throttle valve faults present.**
	If faults DF095 Throttle potentiometer circuit gang 1 or ***DF096 Throttle potentiometer circuit gang 2 are present, deal with these first.*** **Conditions for applying the fault finding procedure to stored faults:** The fault appears after a change in the engine speed.
	IMPORTANT *If the fault is stored, do not clear it; there may be an* ***OBD fault*** *(On Board Diagnostic).*

Check **the cleanliness and condition** of the throttle valve and its connections.
Clean or replace as necessary.

Disconnect the battery.
Disconnect the computer. Check the **cleanliness and condition** of the connections.
Use the bornier to check the insulation, **continuity and the absence of interference resistance** on the following connections:

Computer track G4, connector B → Throttle potentiometer, track 1
Computer track G3, connector B → Throttle potentiometer, track 2
Computer track G2, connector B → Throttle potentiometer, track 5
Computer track D3, connector B → Throttle potentiometer, track 6

Repair if necessary.

Check **the cleanliness** of the throttle, and **correct rotation** of the throttle valve.
Check that gangs 1 and 2 of the throttle potentiometer **correctly follow their resistive curves** (see values in the **Help** section).
Replace the throttle valve if necessary.

If the fault has still not disappeared, process the other faults and then proceed to the conformity check.

AFTER REPAIR	Follow the instructions to confirm repair: – continue to deal with the fault if it is present, – ignore the fault if it is stored. Deal with any other faults. After carrying out all the tests, clear the stored faults.
	If the throttle valve has been replaced, reinitialise the programming (RZ019 Reinitialising programming).

GETtheMANUALS.org

DF329 PRESENT OR STORED	PRESSURE SENSOR CIRCUIT DEF : Unidentified electrical fault

NOTES	**Conditions for applying the fault finding procedure to stored faults:** The fault appears after: – the ignition is switched off and dialogue is lost; – the ignition has been switched on again and dialogue re-established, – a **10 second** delay at idle speed. **IMPORTANT** *If the fault is stored, do not clear it; there may be an **OBD fault** (On Board Diagnostic).*

Check **the cleanliness and condition** of the manifold pressure sensor and its connections.
Clean or replace as necessary.

Disconnect the battery.
Disconnect the computer. Check the **cleanliness and condition** of the connections.
Use the bornier to check the **insulation, continuity and the absence of interference resistance** on the following connections:

Computer track H2, connector B → Pressure sensor, track 1 or C
Computer track H3, connector B → Pressure sensor, track 3 or B
Computer track H4, connector B → Pressure sensor, track 2 or A

Repair if necessary.

If the fault is still present, replace the manifold pressure sensor.

If the fault has still not disappeared, process the other faults and then proceed to the conformity check.

AFTER REPAIR	Follow the instructions to confirm repair: – continue to deal with the fault if it is present, – ignore the fault if it is stored. Deal with any other faults. After carrying out all the tests, clear the stored faults.

GETtheMANUALS.org

DF330 PRESENT OR STORED	PINKING SENSOR CIRCUIT DEF : Unidentified electrical fault

NOTES	**Conditions for applying the fault finding procedure to stored faults:** The fault is declared present following a road test with engine warm and at high engine speed.
	IMPORTANT *If the fault is stored, do not clear it; there may be an **OBD fault** (On Board Diagnostic).*

Check **the cleanliness and condition** of the pinking sensor and its connections.
Clean or replace as necessary.

Disconnect the battery.
Disconnect the computer. Check the **cleanliness and condition** of the connections.
Use the bornier to check the **insulation, continuity and the absence of interference resistance** on the following connections:

Computer track A2, connector B → Pinking sensor, track 2
Computer track B2, connector B → Pinking sensor, track 1
Computer track C2, connector B → Pinking sensor screening

Repair if necessary.

Check **the conformity** of the fuel in the fuel tank.

Check **the conformity** of the spark plugs.

Check the pinking sensor **fitting**.

If the fault is still present, replace the pinking sensor.

If the fault has still not disappeared, process the other faults and then proceed to the conformity check.

AFTER REPAIR	Follow the instructions to confirm repair: – continue to deal with the fault if it is present, – ignore the fault if it is stored. Deal with any other faults. After carrying out all the tests, clear the stored faults.

GETtheMANUALS.org

DF332 PRESENT OR STORED	INJECTION CONNECTION → Air conditioning

NOTES	**None.**

Test the multiplex network.

(see 88B, Multiplexing).

If the fault does not disappear, carry out fault finding on the Air conditioning system.

(see 62B Climate control, 62A Air conditioning or 62C Non regulated climate control).

AFTER REPAIR	Deal with any other faults. After carrying out all the tests, clear the stored faults.

GETtheMANUALS.org

DF336 PRESENT OR STORED	FLYWHEEL SIGNAL INFORMATION 1.DEF: Flywheel ring fault 2.DEF: No tooth signal

NOTES	***If the fault DF329 Pressure sensor circuit is present, prioritise it.*** **Conditions for applying the fault finding procedure to stored faults:** The fault is declared present after the starter motor has been operated for **10 seconds** or after a time delay of **2 minutes** with the engine running.
	IMPORTANT *If the fault is stored, do not clear it; there may be an **OBD fault** (On Board Diagnostic).*

Check **the positioning** of the flywheel signal sensor.

Check **the cleanliness and condition** of the flywheel signal sensor and its connections.
Check the condition of the cable.
Clean or replace as necessary.

Disconnect the battery.
Disconnect the computer. Check the **cleanliness and condition** of the connections.
Use the bornier to check the **insulation, continuity and the absence of interference resistance** on the following connections:

Computer track E4, connector B → Flywheel signal sensor, track 2
Computer track F3, connector B → Flywheel signal sensor, track 1

Repair if necessary.

Check the **resistance of the flywheel signal sensor** (see the value in the **Help** section).
If necessary replace the sensor.

Check **the cleanliness and condition** of the engine flywheel.

Note: if ring gear fitting has been modified, carry out programming again.

If the fault has still not disappeared, process the other faults and then proceed to the conformity check.

AFTER REPAIR	Follow the instructions to confirm repair: – continue to deal with the fault if it is present, – ignore the fault if it is stored. Deal with any other faults. After carrying out all the tests, clear the stored faults.

GETtheMANUALS.org

DF361 PRESENT OR STORED	IGNITION COIL 1-4 CIRCUIT CO.0 : Open circuit or short circuit to earth CC.1 : Short circuit to + 12 V DEF : Unidentified electrical fault

NOTES	***If faults DF084 Actuator relay control circuit DF175 Power supply or DF085 Fuel pump relay control circuit are present, deal with them first.*** **Conditions for applying the fault finding procedure to stored faults:** The fault is declared present after the starter has been in operation for **10 seconds** or after the engine has been running for **10 seconds**. **IMPORTANT** *If the fault is stored, do not clear it; there may be an **OBD fault** (On Board Diagnostic).*

Disconnect the connectors from the pencil coils of cylinders 1 and 4.
Check **the cleanliness and condition** of the pencil coils and their connections.
Clean or replace as necessary.

Check **the primary and secondary resistances** of the pencil coils on cylinders 1 and 4 (see the values in the **Help** section).
Replace a pencil coil if necessary.

Disconnect the battery.
Disconnect the computer. Check the **cleanliness and condition** of the connections.
Use the bornier to check the **insulation, continuity and the absence of interference resistance** on the following connections:

Computer track H2, connector C → **Coil 1, track 2**
Coil 1, track 1 → **Coil 4, track 2**

Repair if necessary.

Check the fuel pump relay supply fuse (this relay also supplies the ignition coils).

Check the **continuity and insulation** of the wiring between coil 4 and the fuel pump relay (this relay supplies the ignition coils).

Check **the electrical resistance** of the fuel pump relay (see the value in the **Help** section).
Replace the relay if necessary.

Check the **cleanliness and condition** of the fuel pump relay connections.
Clean or replace as necessary.

Check **the insulation and continuity** of the wiring between track 3 of the relay and the fuel supply fuse.
Repair if necessary.

If the fault is still present, replace the faulty pencil coil.

If the fault has still not disappeared, process the other faults and then proceed to the conformity check.

AFTER REPAIR	Follow the instructions to confirm repair: – continue to deal with the fault if it is present, – ignore the fault if it is stored. Deal with any other faults. After carrying out all the tests, clear the stored faults.

GETtheMANUALS.org

DF362 PRESENT OR STORED	IGNITION COIL 2-3 CIRCUIT CO.0 : Open circuit or short circuit to earth CC.1 : Short circuit to + 12 V DEF : Unidentified electrical fault

NOTES	***If faults DF084 Actuator relay control circuit DF175 Power supply or DF085 Fuel pump relay control circuit are present, deal with them first.*** **Conditions for applying the fault finding procedure to stored faults:** The fault is declared present after the starter has been in operation for **10 seconds** or after the engine has been running for **10 seconds**. **IMPORTANT** *If the fault is stored, do not clear it; there may be an **OBD fault** (On Board Diagnostic).*

Disconnect the connectors from pencil coils 2 and 3.
Check **the cleanliness and condition** of the pencil coils and their connections.
Clean or replace as necessary.

Check **the primary and secondary resistances** of the pencil coils on cylinders 2 and 3.
(See the values in the **Help** section).
Replace a pencil coil if necessary.

Disconnect the battery.
Disconnect the computer. Check the **cleanliness and condition** of the connections.
Use the bornier to check the **insulation, continuity and the absence of interference resistance** on the following connections:

Computer track H3, connector C → **Coil 2, track 2**
Coil 2, track 1 → **Coil 3, track 2**

Repair if necessary.

Check the fuel pump relay supply fuse (this relay also supplies the ignition coils).

Check the **continuity and insulation** of the line between coil 3 and the fuel pump relay (this relay supplies the ignition coils).

Check **the electrical resistance** of the fuel pump relay (see the value in the **Help** section).
Replace the relay if necessary.

Check the **cleanliness and condition** of the fuel pump relay connections.
Clean or replace as necessary.

Check **the insulation and continuity** of the line between **track 3** of the relay and supply fuse.
Repair if necessary.

If the fault is still present, replace the faulty pencil coil.

If the fault has still not disappeared, process the other faults and then proceed to the conformity check.

AFTER REPAIR	Follow the instructions to confirm repair: – continue to deal with the fault if it is present, – ignore the fault if it is stored. Deal with any other faults. After carrying out all the tests, clear the stored faults.

GETtheMANUALS.org

DF390 PRESENT OR STORED	OXYGEN SENSOR OPERATING FAULT

NOTES	**Deal with the other faults first (except for DF394 Catalytic converter operating fault).**

Check **the cleanliness, condition and tightness** of the upstream oxygen sensor.

If the vehicle is driven frequently in town, **carry out the unclogging procedure**.

Check that **there are no leaks** in the exhaust system, from the manifold to the catalytic converter.

Check:
- the condition of the air filter,
- that the air inlet system is not blocked,
- the condition and conformity of the spark plugs,
- the sealing between the throttle valve and inlet manifold,
- the manifold pressure sensor sealing,
- the fuel vapour absorber bleed, which should not be jammed open,
- that there are no leaks in the fuel vapour absorber bleed circuit,
- the brake servo system sealing,
- the turbocharger safety valve circuit sealing,
- the cylinder head oil vapour recovery system sealing,
- the sealing between the inlet manifold and cylinder head,
- the fuel flow rate and pressure,
- the exhaust pipe sealing between the cylinder head and catalytic converter,
- that the catalytic converter and the exhaust system are not blocked.

If the idling speed is not stable, **check**:
- the timing adjustment,
- the hydraulic tappets if there is camshaft noise,
- the cylinder compression.

Drive the vehicle to check the repair.

If the fault has still not disappeared, process the other faults and then proceed to the conformity check.

AFTER REPAIR	Deal with any other faults. After carrying out all the tests, clear the stored faults.

GETtheMANUALS.org

DF394 PRESENT OR STORED	CATALYTIC CONVERTER OPERATING FAULT

NOTES	***Deal with the other faults first.*** ***There must be no other injection system fault, either present or stored.***

If the vehicle is driven frequently in town, **carry out the unclogging procedure** (oxygen sensors and catalytic converter clogging).

Check that the exhaust pipe is completely **leak free**.

Check **the cleanliness, condition and tightness** of the downstream oxygen sensor.
Check **the cleanliness and condition** of the downstream oxygen sensor connections.
Clean or replace as necessary.

Check that the downstream oxygen sensor is operating correctly.
Check the condition of **ET053 Downstream O_2 sensor heating** and parameter **PR099 Downstream oxygen sensor voltage of the downstream oxygen sensor**.
Refer to the values in the **Conformity check** section.
If one of the values is not correct, carry out fault finding for **ET053 Downstream O_2 sensor heating** or **PR099 Downstream oxygen sensor voltage**.

Check that the upstream oxygen sensor is operating correctly.
Check the status of **ET052 Upstream O_2 sensor heating** and parameter **PR098 Upstream oxygen sensor voltage**.
Refer to the values in the **Conformity check** section.
If one of the values is not correct, carry out fault finding for **ET052 Upstream O_2 sensor heating** or **PR098 Upstream oxygen sensor voltage**.

If the oxygen sensors are operating perfectly well, then the catalytic converter has undoubtedly been damaged. (see the next page to determine the cause of the damage).

AFTER REPAIR	Deal with any other faults. After carrying out all the tests, clear the stored faults.

GETtheMANUALS.org

DF394 **CONTINUED**	

NOTES	

Before replacing the catalytic converter, determine the cause of the damage, otherwise the new catalytic converter may be damaged.

Remove the catalytic converter.

Various things may destroy a catalytic converter:
- **deformation** (impact),
- **thermal shock** (cold water splashed onto a hot catalytic converter can damage it),
- **defective injector or ignition:** the catalytic converter is damaged by contact with petrol (coil fault, coil control fault, injector jammed open),
- **injector leak**,
- **abnormal oil or coolant consumption** (defective cylinder head gasket),
- **use of a fuel additive** or other equivalent product (obtain information from the customer because this type of product can contaminate the catalytic converter and render it useless sooner or later).

Refer to the history of work carried out on the vehicle or, if this is not possible, ask the customer if the vehicle has had injection or ignition faults.

If the cause of the catalytic converter damage has been found and the fault has disappeared, replace the catalytic converter.

If the fault has still not disappeared, process the other faults and then proceed to the conformity check.

AFTER REPAIR	Deal with any other faults. After carrying out all the tests, clear the stored faults.

GETtheMANUALS.org

DF398 **PRESENT**	FUEL CIRCUIT OPERATING FAULT OBD : OBD fault 1.OBD: OBD fault detected when driving

NOTES	**Deal first with any faults relating to the ignition or fuel circuit, if they are present.**

Carry out a complete check on the petrol supply system.
Check the cleanliness of the petrol tank if necessary.
If the fault does not disappear, deal with the other faults then go to the conformity check.

AFTER REPAIR	Deal with any other faults. Clear the stored faults.

GETtheMANUALS.org

DF399 PRESENT	IMMOBILISER CODE NOT PROGRAMMED

NOTES	***If fault DF038 Computer is present, deal with it first.***

Test the multiplex network (see 88B, Multiplexing).
If the fault does not disappear, carry out fault finding on the Immobiliser system (see 82A Engine Immobiliser).

AFTER REPAIR	Deal with any other faults. After carrying out all the tests, clear the stored faults.

GETtheMANUALS.org

DF405 PRESENT OR STORED	PEDAL POTENTIOMETER CIRCUIT 1.DEF: Consistency between gang 1 and gang 2

NOTES	*If faults DF008 Pedal potentiometer circuit gang 1 or* ***DF009 Pedal potentiometer circuit gang 2 are present, deal with these first.*** **Conditions for applying the fault finding procedure to stored faults.** The fault is declared as present in one of the following cases: – when the ignition is switched on without the accelerator pedal being depressed during the **first 10 seconds**, – when the pedal potentiometer is gently shifted from no load to full load, – when the accelerator is in the full load position for **10 seconds**. **IMPORTANT** *If the fault is stored, do not clear it; there may be an* ***OBD fault*** *(On Board Diagnostic).*

Check that the pedal mechanism has not seized.

Check the **cleanliness and condition** of the pedal potentiometer and its connections.
Clean or replace as necessary.

Disconnect the battery.
Disconnect the computer. Check the **cleanliness and condition** of the connections.
Use the bornier to check the insulation, **continuity and the absence of interference resistance** on the following connections:

Computer track H3, connector A → Pedal potentiometer, track 2
Computer track G2, connector A → Pedal potentiometer, track 4
Computer track H2, connector A → Pedal potentiometer, track 3
Computer track F4, connector A → Pedal potentiometer, track 1
Computer track F2, connector A → Pedal potentiometer, track 5
Computer track F3, connector A → Pedal potentiometer, track 6

Repair if necessary.

Check that **gangs 1 and 2 of the pedal potentiometer** correctly follow their resistive curves.
(See the values in the **Help** section).
Replace the pedal potentiometer if necessary.

If the fault has still not disappeared, process the other faults and then proceed to the conformity check.

AFTER REPAIR	Follow the instructions to confirm repair: – continue to deal with the fault if it is present, – ignore the fault if it is stored. Deal with any other faults. After carrying out all the tests, clear the stored faults.

GETtheMANUALS.org

DF408 PRESENT OR STORED	HEATED WINDSCREEN DEF : Unidentified electrical fault

NOTES	**None.**

Test the multiplex network (see **88B, Multiplexing**).

If the fault has not been solved, run fault finding on the Air conditioning system (see 62A, Air conditioning, 62B, Climate control or 62C, Non regulated climate control).

AFTER REPAIR	Deal with any other faults. After carrying out all the tests, clear the stored faults.

GETtheMANUALS.org

DF411 PRESENT OR STORED	BRAKE PEDAL SENSOR CIRCUIT 1.DEF: Fault on one of the two brake pedal switches 2.DEF: Fault on both brake pedal switches

NOTES	***It is essential that the ABS is not faulty when carrying out this test.*** **Fault finding conditions for stored faults:** The fault is declared present after the brake pedal has been depressed and held down.

Check **the cleanliness and condition** of the double-contact switch and its connections.
Clean or replace as necessary.

Disconnect the battery.
Disconnect the computer. Check the **cleanliness and condition** of the connections.
Use the bornier to check the **insulation, continuity and the absence of interference resistance** on the following connection:

Computer track E4, connector A ⟶ **Brake light switch, track B3**

Repair if necessary.

If the fault does not disappear, process the other faults then go to the conformity check.

AFTER REPAIR	Follow the instructions to confirm repair: – continue to deal with the fault if it is present, – ignore the fault if it is stored. Deal with any other faults. After carrying out all the tests, clear the stored faults.

GETtheMANUALS.org

DF412 PRESENT OR STORED	ACCELERATOR PEDAL/MOTORISED THROTTLE VALVE CIRCUIT DEF : Consistency between the pedal position and the position of the motorised throttle 1.DEF: Fault on + 5 Volt power supply 2.DEF: Fault on potentiometer supply 1 3.DEF: Fault on potentiometer supply 2

NOTES	**SAFETY ADVICE:** **Never drive the vehicle without having made sure that there are no throttle valve faults present.**
	If faults DF328 Throttle potentiometer circuit, DF095 Throttle potentiometer circuit gang 1, DF096 Throttle potentiometer circuit gang 2, DF008 Pedal potentiometer circuit gang 1, DF009 Pedal potentiometer circuit gang 2, DF405 Pedal potentiometer circuit or DF413 Motorised throttle are present, deal with them first. **Conditions for applying the fault finding procedure to stored faults:** The fault appears after a change in the engine speed.
	IMPORTANT *If the fault is stored, do not clear it; there may be an **OBD fault** (On Board Diagnostic).*

Check the **cleanliness and condition** of the pedal potentiometer and its connections. Clean or replace as necessary.
Check **the cleanliness, connection and condition** of the motorised throttle and its connections. Clean or replace as necessary.
Check **the cleanliness** of the throttle, and **correct rotation** of the throttle valve. Check that gangs 1 and 2 of the throttle potentiometer **correctly follow their resistive curves** (see values in the **Help** section). Replace the throttle valve if necessary.
Check **the electrical resistance** of the throttle motor (see the value in the **Help** section). Replace the throttle valve if necessary.
Check that **the resistances of the pedal potentiometer, gangs 1 and 2,** correctly follow their resistive curves. (See the values in the **Help** section). Replace the pedal potentiometer if necessary.

AFTER REPAIR	Follow the instructions to confirm repair: – continue to deal with the fault if it is present, – ignore the fault if it is stored. Deal with any other faults. After carrying out all the tests, clear the stored faults.
	If the throttle valve has been replaced, reinitialise the programming (RZ019 Reinitialising programming).

GETtheMANUALS.org

DF412 **CONTINUED**	

Disconnect the battery.
Disconnect the computer. Check the **cleanliness and condition** of the connections.
Use the bornier to check the **insulation, continuity and the absence of interference resistance** on the following connections:

- **Computer track H3, connector A → Pedal potentiometer, track 2**
- **Computer track G2, connector A → Pedal potentiometer, track 4**
- **Computer track H2, connector A → Pedal potentiometer, track 3**
- **Computer track F4, connector A → Pedal potentiometer, track 1**
- **Computer track F2, connector A → Pedal potentiometer, track 5**
- **Computer track F3, connector A → Pedal potentiometer, track 6**
- **Computer track M3, connector B → Motorised throttle, track 3**
- **Computer track M4, connector B → Motorised throttle, track 4**
- **Computer track G4, connector B → Motorised throttle potentiometer, track 1**
- **Computer track D3, connector B → Motorised throttle potentiometer, track 6**
- **Computer track G2, connector B → Motorised throttle potentiometer, track 5**
- **Computer track G3, connector B → Motorised throttle potentiometer, track 2**

Repair if necessary.

If the fault has still not disappeared, process the other faults and then proceed to the conformity check.

AFTER REPAIR	Follow the instructions to confirm repair: – continue to deal with the fault if it is present, – ignore the fault if it is stored. Deal with any other faults. After carrying out all the tests, clear the stored faults.
	If the throttle valve has been replaced, reinitialise the programming (RZ019 Reinitialising programming).

JSAA5041.0

GETtheMANUALS.org

DF413 PRESENT OR STORED	MOTORISED THROTTLE DEF : Unidentified electrical fault 1.DEF: Motorised throttle servo control fault 2.DEF: Motorised throttle limit search fault 3.DEF: Motorised throttle control general fault 4.DEF: PROGRAMMING 5.DEF: PROGRAMMING 6.DEF: Motorised throttle limit search fault 7.DEF: Motorised throttle valve flap oscillations 8.DEF: Motorised throttle servo control fault

NOTES	**SAFETY ADVICE:** **Never drive the vehicle without having made sure that there are no throttle valve faults present.** **Conditions for applying the fault finding procedure to stored faults:** The fault appears after a change in the engine speed. **IMPORTANT** *If the fault is stored, do not clear it; there may be an **OBD** (On Board Diagnostic) fault.*

Check **the cleanliness and condition** of the throttle valve and its connections.
Clean or replace as necessary.

Disconnect the battery.
Disconnect the computer. Check the **cleanliness and condition** of the connections.
Use the bornier to check the **insulation, continuity and the absence of interference resistance** on the following connections:

Computer track M3, connector B → Motorised throttle, track 3
Computer track M4, connector B → Motorised throttle, track 4
Computer track G4, connector B → Motorised throttle, track 1

Repair if necessary.

Check the **electrical resistance** of the throttle motor (see the value in the **Help** section).
Replace the throttle valve if necessary.

Check **the cleanliness** of the throttle valve and that the throttle **rotates correctly**.
Clean or replace as necessary.

If the fault has still not disappeared, process the other faults and then proceed to the conformity check.

AFTER REPAIR	Follow the instructions to confirm repair: – continue to deal with the fault if it is present, – ignore the fault if it is stored. Deal with any other faults. After carrying out all the tests, clear the stored faults.
	If the throttle valve has been replaced, reinitialise the programming (RZ019 Reinitialising programming).

GETtheMANUALS.org

DF414 PRESENT OR STORED	THERMOPLUNGER 1 RELAY CONTROL CO.0 : Open circuit or short circuit to earth CC.1 : Short circuit to + 12 V DEF : Unidentified electrical fault

NOTES	***If faults DF002 Air temperature sensor circuit, DF001 Coolant temperature sensor circuit, DF084 Actuator relay control circuit or DF175 Power supply are present, deal with them first.*** **Conditions for applying the fault finding procedure to stored faults:** The fault is declared present after the ignition has been switched on.

Check **the cleanliness and condition** of thermoplunger relay 1 and its connections.
Clean or replace as necessary.

Check **the resistance of thermoplunger** relay 1 (see the value in the **Help** section).
Replace the relay if necessary.

With the ignition on, check for **+ 12 V on track 1** of the No. 1 thermoplunger relay.
Repair the wiring up to the fuse if necessary.

Disconnect the battery.
Disconnect the computer. Check the **cleanliness and condition** of the connections.
Use the bornier to check the **insulation, continuity and the absence of interference resistance** on the following connection:

Injection computer track D2, connector C ⟶ **Thermoplunger no. 1 relay, track 65**

Repair if necessary.

If the fault has still not disappeared, process the other faults and then proceed to the conformity check.

AFTER REPAIR	Follow the instructions to confirm repair: – continue to deal with the fault if it is present, – ignore the fault if it is stored. Deal with any other faults. After carrying out all the tests, clear the stored faults.

GETtheMANUALS.org

DF415 PRESENT OR STORED	THERMOPLUNGER 2 RELAY CONTROL CO.0 : Open circuit or short circuit to earth CC.1 : Short circuit to + 12 V DEF : Unidentified electrical fault

NOTES	***If faults DF002 Air temperature sensor circuit, DF001 Coolant temperature sensor circuit, DF084 Actuator relay control circuit or DF175 Power supply are present, deal with them first.*** **Conditions for applying the fault finding procedure to stored faults:** The fault is declared present after the ignition has been switched on.

Check **the cleanliness and condition** of thermoplunger 2 relay and its connections. Clean or replace as necessary.
Check **the resistance of thermoplunger** relay 2 (see the value in the **Help** section). Replace the relay if necessary.
Check for **+ 12 V after ignition on track 1** of thermoplunger relay 2. Repair the wiring up to the fuse if necessary.
Disconnect the battery. Disconnect the computer. Check the **cleanliness and condition** of the connections. Use the bornier to check the **insulation, continuity and the absence of interference resistance** on the following connection: **Injection computer track J4, connector B ⟶ Thermoplunger no. 2 relay, track 3** Repair if necessary.
If the fault has still not disappeared, process the other faults and then proceed to the conformity check.

AFTER REPAIR	Follow the instructions to confirm repair: – continue to deal with the fault if it is present, – ignore the fault if it is stored. Deal with any other faults. After carrying out all the tests, clear the stored faults.

GETtheMANUALS.org

DF437 PRESENT OR STORED	ENGINE TORQUE MODULATION

NOTES	**None.**

Test the multiplex network.

(see 88B, Multiplexing).

If the fault does not disappear, carry out fault finding on the Automatic gearbox system.

(see 23A Automatic gearbox).

AFTER REPAIR	Deal with any other faults. After carrying out all the tests, clear the stored faults.

GETtheMANUALS.org

DF455 PRESENT OR STORED	LOW FUEL LEVEL SIGNAL

NOTES	**IMPORTANT** *If the fault is stored, do not clear it; there may be an **OBD fault** (On Board Diagnostic).*

Test the multiplex network.

(see 88B, Multiplexing).

If the fault does not disappear, carry out fault finding on the Instrument panel system.

(see 83A Instrument panel).

AFTER REPAIR	Deal with any other faults. After carrying out all the tests, clear the stored faults.

GETtheMANUALS.org

DF488 PRESENT OR STORED	EXHAUST AIR INJECTION OPERATING FAULT

NOTES	***If faults DF084 Actuator relay control circuit DF175 Power supply or DF547 Air pump relay circuit are present, deal with them first.*** ***Check that there are no present or stored faults relating to the oxygen sensors or the catalytic converter.*** **Conditions for applying the fault finding procedure to stored faults:** The fault is declared present after the fan has been activated while the engine is running.
	WARNING *If the fault is stored, do not clear it; there may be an **OBD fault** (On Board Diagnostic).*

Check the **+ battery supply fuse** of the air pump relay and its connections. Clean or replace as necessary.
Disconnect the relay. Check the **cleanliness and condition** of the air pump relay and its connections. Clean or replace as necessary.
With the ignition on, check for **+ 12 V on track 1** of the air pump relay, connector end. Repair if necessary.
Check **the resistance** of the air pump relay on **tracks 1 and 2.** (See the value in the **Help** section). Replace the air pump relay if necessary.
Disconnect the air pump motor connector. Check the cleanliness and condition of the connections. Clean or replace as necessary. Check the **insulation, continuity and absence of interference resistance** on the connections between: **Track 5 of the air pump relay ⟶ Air pump relay connector, track 1** **Earth ⟶ Air pump relay connector, track 2** Repair if necessary.
Check **the resistance** of the air pump motor (check the value in the **Help** section). Replace the air pump motor if necessary.
Check the absence of leaks in the air circuit between the air pump and the exhaust.
If the fault has still not disappeared, process the other faults and then proceed to the conformity check.

AFTER REPAIR	Follow the instructions to confirm repair: – continue to deal with the fault if it is present, – ignore the fault if it is stored. Deal with any other faults. After carrying out all the tests, clear the stored faults.

GETtheMANUALS.org

DF491 PRESENT OR STORED	ELECTRONIC STABILITY PROGRAM (ESP)

NOTES	**None.**

Test the multiplex network.

(see 88B, Multiplexing).

If the fault has not been resolved, carry out a fault finding procedure on the ESP/ABS systems.

(see 38C, Anti-lock braking system.)

AFTER REPAIR	Deal with any other faults. After carrying out all the tests, clear the stored faults.

GETtheMANUALS.org

DF492 PRESENT OR STORED	CRUISE CONTROL /SPEED LIMITER DEF : Unidentified electrical fault 1.DEF: Inconsistency

NOTES	**Conditions for applying the fault finding procedure to stored faults:** The fault is declared present after a road test using the cruise control then the speed limiter function.
	WARNING **It is necessary to remove the airbag in order to remove or check the Cruise control/speed limiter control switches.** **See the Workshop Repair Manual, section 88 wiring Airbag.**

DEF	Check **the cleanliness and condition** of the incrementing switches at the steering wheel and their connections. Clean or replace as necessary.
	Check for **earth** on the incrementing switches at the steering wheel. Repair if necessary.
	Disconnect the battery. Disconnect the computer. Check the **cleanliness and condition** of the connections. Use the bornier to check the **insulation, continuity and the absence of interference resistance** on the following connections: **Computer track D2, connector A → Steering wheel control, track A2** **Computer track D3, connector A → Steering wheel control, track A1** Repair if necessary.
	If the fault has still not disappeared, process the other faults and then proceed to the conformity check.

AFTER REPAIR	Follow the instructions to confirm repair: – continue to deal with the fault if it is present, – ignore the fault if it is stored. Deal with any other faults. After carrying out all the tests, clear the stored faults.

GETtheMANUALS.org

DF492 **CONTINUED**	

1.DEF	Check the **cleanliness and condition** of the cruise control/speed limiter selector switch and its connections. Clean or replace as necessary.
	With the ignition on, check for **+ 12 V** on the cruise control/speed limiter selector switch. (See the connector track number on the relevant wiring diagram). Repair if necessary.
	Disconnect the battery. Disconnect the computer. Check the **cleanliness and condition** of the connections. Use the bornier to check the **insulation, continuity and the absence of interference resistance** on the following connections: **Computer track A2, connector A → Cruise control or speed limiter on/off switch, track A3** **Computer track C3, connector A → Cruise control or speed limiter on/off switch, track B1** Repair if necessary.
	If the fault has still not disappeared, process the other faults and then proceed to the conformity check.

AFTER REPAIR	Follow the instructions to confirm repair: – continue to deal with the fault if it is present, – ignore the fault if it is stored. Deal with any other faults. After carrying out all the tests, clear the stored faults.

JSAA5041.0

GETtheMANUALS.org

DF504 PRESENT OR STORED	AUTOMATIC TRANSMISSION

NOTES	**IMPORTANT** *If the fault is stored, do not clear it; there may be an **OBD fault** (On Board Diagnostic).*

Test the multiplex network.

(see 88B, Multiplexing).

If the fault does not disappear, carry out fault finding on the Automatic gearbox system.

(see 23A, Automatic gearbox).

AFTER REPAIR	Deal with any other faults. After carrying out all the tests, clear the stored faults.

GETtheMANUALS.org

DF547 PRESENT OR STORED	AIR PUMP RELAY CIRCUIT CO.0 : Open circuit or short circuit to earth CC.1 : Short circuit to + 12 V DEF : Unidentified electrical fault

NOTES	***If the faults DF084 Actuator relay control circuit or DF175 Power supply are present or stored, deal with them first.*** **Conditions for applying the fault finding procedure to stored faults:** The fault is declared present after the ignition has been switched on.
	WARNING *If the fault is stored, do not clear it; there may be an **OBD fault** (On Board Diagnostic).*

Check the **cleanliness and condition** of the air pump relay and its connections.
Clean or replace as necessary.

Check **the resistance** of the air pump relay on **tracks 1 and 2** (see the value in the **Help** section).
Replace the relay if necessary.

With the ignition on, check for **12 V on track 1** on the connector end of the air pump relay.
Repair if necessary.

Disconnect the battery.
Disconnect the computer. Check the **cleanliness and condition** of the connections.
Use the bornier to check the **insulation, continuity and the absence of interference resistance** on the following connection:

Injection computer track B2, connector A ⟶ **Air pump relay, track 2**

Repair if necessary.

If the fault has still not disappeared, process the other faults and then proceed to the conformity check.

AFTER REPAIR	Follow the instructions to confirm repair: – continue to deal with the fault if it is present, – ignore the fault if it is stored. Deal with any other faults. After carrying out all the tests, clear the stored faults.

GETtheMANUALS.org

DF569 PRESENT OR STORED	TURBOCHARGING SYSTEM DEF : Unidentified electrical fault

NOTES	***If faults DF329 Pressure sensor circuit, DF084 Actuator relay control circuit, DF175 Power supply, DF570 Coolant pump relay, DF571 Turbocharging valve, DF199 Turbocharging pressure valve or DF582 Pressure consistency are present, deal with them first.*** **Conditions for applying the fault finding procedure to stored faults:** The fault is declared present after a road test. **WARNING** *If the fault is stored, do not clear it; there may be an **OBD fault** (On Board Diagnostic).*

Check the cleanliness of the air filter.
Replace the filter if necessary.
Check that the air inlet system is not blocked.

The turbocharging system must be perfectly sealed, from the exhaust manifold to the turbocharger, from the turbocharger to the heat exchanger and from the heat exchanger to the throttle valve.
Check that there are no air leaks:
– around the turbocharger pressure sensor,
– around the air temperature sensor.

Check absence of leaks in the wastegate capsule pressure circuit connected to the turbocharger system.

Check that the air-air heat exchanger is not clogged (presence of oil).
If there is oil in the heat exchanger, the turbocharger is certainly damaged.

Using a pressure/vacuum pump, check that the turbocharger protection and wastegate capsule diaphragms do not leak.

Check that the wastegate solenoid valve is not jammed (mechanically seized).
To do this, activate the wastegate solenoid valve **AC151 Turbocharging valve**.
The solenoid valve should click.
If the solenoid valve does not click, run the **DF571 Turbocharging valve** fault finding procedure.

If no fault is found in the turbocharging system, there must be a **mechanical fault** with the turbocharger.
Test the turbocharger.

If the fault has still not disappeared, process the other faults and then proceed to the conformity check.

AFTER REPAIR	Follow the instructions to confirm repair: – continue to deal with the fault if it is present, – ignore the fault if it is stored. Deal with any other faults. Clear the stored faults.

GETtheMANUALS.org

DF570 PRESENT OR STORED	COOLANT PUMP RELAY CO.0 : Open circuit or short circuit to earth CC.1 : Short circuit to + 12 V DEF : Unidentified electrical fault.

NOTES	***If fault DF084 Actuator relay control circuit or DF175 Power supply are present, deal with them first.*** **Conditions for applying the fault finding procedure to stored faults:** The fault is declared present after the ignition has been switched on.

Check the **cleanliness and condition** of the coolant pump relay and its connections.
Clean or replace as necessary.

Check **the resistance** of the relay on **tracks 1 and 2** (see the value in the **Help** section).
Replace the relay if necessary.

With the ignition on, check for **12 V on track 1** on the connector end of the relay.
Repair if necessary.

Disconnect the battery.
Disconnect the computer. Check the **cleanliness and condition** of the connections.
for the bornier, check the insulation, **continuity and the absence of interference resistance** on the following connection:

Injection computer track C2, connector C ⟶ **Coolant pump relay, track 60**

Repair if necessary.

If the fault has still not disappeared, process the other faults and then proceed to the conformity check.

AFTER REPAIR	Follow the instructions to confirm repair: – continue to deal with the fault if it is present, – ignore the fault if it is stored. Deal with any other faults. After carrying out all the tests, clear the stored faults.

GETtheMANUALS.org

DF571 PRESENT OR STORED	TURBOCHARGING VALVE CO.0 : Open circuit or short circuit to earth CC.1 : Short circuit to + 12 V DEF : Unidentified electrical fault

NOTES	***If the faults DF084 Actuator relay control circuit or DF175 Power supply are present or stored, deal with them first.*** **Conditions for applying the fault finding procedure to stored faults:** The fault is declared present after the ignition has been switched on.
	WARNING *If the fault is stored, do not clear it; there may be an **OBD fault** (On Board Diagnostic).*

Check **the cleanliness and condition** of the wastegate solenoid valve and its connections.
Clean or replace as necessary.

With the ignition on, check for **+ 12 V** on the solenoid valve.
Repair if necessary.

Disconnect the battery.
Disconnect the computer. Check the **cleanliness and condition** of the connections.
for the bornier, check the insulation, **continuity and the absence of interference resistance** on the following connection:

Computer track D4, connector C ⟶ **Turbocharging solenoid valve, track 1**

Repair if necessary.

Check the **resistance** of the turbocharging solenoid valve (see the value in the **Help** section).
Replace the solenoid valve, if necessary.

If the fault has still not disappeared, process the other faults and then proceed to the conformity check.

AFTER REPAIR	Follow the instructions to confirm repair: – continue to deal with the fault if it is present, – ignore the fault if it is stored. Deal with any other faults. After carrying out all the tests, clear the stored faults.

GETtheMANUALS.org

DF582 PRESENT OR STORED	PRESSURE CONSISTENCY 1.DEF : Consistency between the turbocharging pressure and the atmospheric pressure

NOTES	***If faults DF329 Pressure sensor circuit, DF084 Actuator relay control circuit, DF175 Power supply, DF569 Turbocharging circuit, DF570 Coolant pump relay, DF571 Turbocharging valve, or DF199 Turbocharging pressure valve are present, deal with them first.*** **Conditions for applying the fault finding procedure to stored faults:** The fault appears after: – the ignition is switched off and dialogue is lost; – the ignition has been switched on again and dialogue re-established, – a **10 second** delay at idle speed. **WARNING** *If the fault is stored, do not clear it; there may be an **OBD fault** (On Board Diagnostic).*

Check **the cleanliness and condition** of the manifold pressure sensor and the turbocharging pressure sensor.
Check **the cleanliness and condition** of their connections.
Clean or replace as necessary.

Disconnect the battery.
Disconnect the computer. Check the **cleanliness and condition** of the connections.
Use the bornier to check the insulation, **continuity and the absence of interference resistance** on the following connections:

Computer track H2, connector B	→	**Manifold pressure sensor, track 1 or C**
Computer track H3, connector B	→	**Manifold pressure sensor, track 3 or B**
Computer track H4, connector B	→	**Manifold pressure sensor, track 2 or A**
Computer track E1, connector B	→	**Turbocharging pressure sensor, track 2 or A**
Computer track F1, connector B	→	**Turbocharging pressure sensor, track 3 or B**
Computer track G1, connector B	→	**Turbocharging pressure sensor, track 1 or C**

Repair if necessary.

If the fault has still not disappeared, process the other faults and then proceed to the conformity check.

AFTER REPAIR	Follow the instructions to confirm repair: – continue to deal with the fault if it is present, – ignore the fault if it is stored. Deal with any other faults. After carrying out all the tests, clear the stored faults.

GETtheMANUALS.org

DF586 PRESENT OR STORED	INJECTION CONNECTION ↔ INSTRUMENT PANEL 1.DEF: Multiplex

NOTES	**None.**

Test the multiplex network.

(see 88B, Multiplexing).

If the fault does not disappear, carry out fault finding on the Instrument panel system.

(see 83A Instrument panel).

AFTER REPAIR	Deal with any other faults. After carrying out all the tests, clear the stored faults.

GETtheMANUALS.org

DF612 PRESENT OR STORED	OIL VAPOUR ANTI-ICING RESISTOR CIRCUIT CO.0 : Open circuit or short circuit to earth CC.1 : Short circuit to + 12 V DEF : Unidentified electrical fault

NOTES	***If faults DF002 Air temperature sensor circuit, DF001 Coolant temperature sensor circuit, DF084 Actuator relay control circuit or DF175 Power supply are present, deal with them first.*** **Conditions for applying the fault finding procedure to stored faults:** The fault is declared present after the ignition has been switched on.

Check the **cleanliness and condition** of the anti-icing resistor relay connections.
Clean or replace as necessary.

Check the **electrical resistance** of the anti-icing resistor relay (see the value in the **Help** section).
Replace the relay if necessary.

With the ignition on, check for **+ 12 V on track 1** of the anti-icing resistor relay.
Repair if necessary.

Disconnect the battery.
Disconnect the computer. Check the **cleanliness and condition** of the connections.
Use the bornier to check the **insulation, continuity and the absence of interference resistance** on the following connection:

Injection computer track B3, connector A ⟶ **Anti-icing resistance relay, track 2**

Repair if necessary.

If the fault has still not disappeared, process the other faults and then proceed to the conformity check.

AFTER REPAIR	Follow the instructions to confirm repair: – continue to deal with the fault if it is present, – ignore the fault if it is stored. Deal with any other faults. After carrying out all the tests, clear the stored faults.

GETtheMANUALS.org

DF617 PRESENT OR STORED	VACUUM PUMP RELAY CIRCUIT C.O.0 : Open circuit or short circuit to earth. CC.1 : Short circuit to + 12 V

NOTES	**Conditions for applying the fault finding procedure to stored faults:** The fault is declared present with the engine running or on running **AC198 Vacuum pump relay**.

Handle the harness to detect any change of condition.
Search for any other potential damage to the harness, and check the connection, cleanliness and condition of the vacuum pump relay.
Repair if necessary.

If the fault is still present, check for **+ 12 V** on the connector end of vacuum pump relay track 1, then check earth on the connector end of vacuum pump relay track 2.
Repair if necessary.

In the fault is still present, disconnect the battery and then the computer.
Check **the insulation, continuity and absence of interference resistance** on the following connections:

Actuator relay → **Track 1 of the vacuum pump relay, track 5**

Track 2 of vacuum pump relay → **Track E2, connector C of the computer**

Repair if necessary.

If the fault persists, replace the sensor.

If the fault persists, deal with the other faults then proceed to the conformity check.

AFTER REPAIR	Follow the instructions to confirm repair. Deal with any other faults. Clear the stored faults.

GETtheMANUALS.org

DF618 PRESENT OR STORED	VACUUM PUMP/PRESSURE SWITCH SYSTEM

NOTES	**If faults DF199 Turbocharging pressure sensor, DF569 Turbocharging circuit, DF582 Pressure consistency, DF411 Brake pedal sensor circuit or DF617 Vacuum pump relay circuit are present, deal with them first.**

Handle the harness to detect any change of condition.
Search for any other potential damage to the harness, check the connection, cleanliness and condition of the pressure switch.
Check the brake servo connection and the state of the pipe between the pump and brake servo.
Repair if necessary.

If the fault is still present, run **AC198 Vacuum pump relay**: the vacuum makes a noise.
If not, check 20A vacuum pump relay fuse.
Replace it if necessary.

In the fault is still present, check for + 12 V at the fuse.
Refer to the vehicle wiring diagram and repair if necessary.

In the fault is still present, check for + 12 V on the connector end of vacuum pump relay track 3, then check earth on the connector of vacuum pump relay track A2.
Repair if necessary.

If the fault is still present, **check the insulation, continuity and absence of interference resistance** on the following connections:

Vacuum pump relay fuse → **Track 3 of the vacuum pump relay**

Track 5 of the vacuum pump relay → **Track A1** of the vacuum pump

Track A2 of the vacuum pump → **Earth**

Repair if necessary.

In the fault is still present, apply the **ET551 Mastervac pressure switch signal**.

AFTER REPAIR	Follow the instructions to confirm repair. Deal with any other faults. Clear the stored faults.

GETtheMANUALS.org

NOTES	Only check conformity after a **thorough check** with the diagnostic tool. The values indicated in this conformity check are given as examples. **Application conditions:** Engine stopped, **ignition on**.

MAIN COMPUTER STATUSES AND PARAMETERS

Order	Function	Parameter or Status checked or Action		Display and Notes	Fault finding
1	Power supply	**PR071:**	Computer supply voltage	**11 V < PR071 < 14 V**	In the event of a fault, consult the interpretation of parameter **PR071 Computer supply voltage**.
2		**ET001:**	Computer + after ignition feed	**PRESENT**	
3	Vehicle speed	**PR155:**	Vehicle speed	**0 mph**	In the event of a fault, consult the interpretation of fault **DF090 Vehicle speed sensor circuit.**
4	Automatic gearbox	**ET063:**	Park/Neutral position	**YES:** automatic gearbox in park/neutral position **NO:** automatic gearbox not in park/ neutral position	In the event of a fault, carry out a multiplex network test, then if the test is correct, look at the automatic gearbox.
5	Mileage	**PR493:**	Mileage with fault warning light lit	Indicates the mileage during which the fault warning light has been illuminated	In the event of a fault, test the ABS system.
6	Pedal assembly	**ET237:**	Brake pedal	**DEPRESSED** (pedal depressed)	In the event of a fault, consult the interpretation of status **ET237 Brake pedal.**
7		**ET233:**	Clutch pedal	**DEPRESSED** (pedal depressed, default value for vehicles fitted with an automatic gearbox).	In the event of faults, consult the interpretation of status **ET233 Clutch pedal**.

GETtheMANUALS.org

NOTES	Only check conformity after a **thorough check** with the diagnostic tool. The values indicated in this conformity check are given as examples. **Test condition:** Ignition on, engine off.

SUB-FUNCTION - AIR CIRC. (TURBO/INLET.)

Order	Function	Parameter or Status checked or Action		Display and Notes	Fault finding
1	Atmospheric pressure sensor	**PR035:**	Atmospheric pressure	**PR035 ≈ PR421 ≈ PR041 ≈ 1000 mb**	In the event of a fault, refer to the interpretation of parameter **PR421 Manifold pressure**.
2		**PR421:**	Inlet manifold vacuum		
3	Turbocharging pressure sensor	**PR041:**	Turbocharging pressure		In the event of a fault, refer to the interpretation of parameter **PR041 Turbocharging pressure**.
4	Air temperature sensor	**PR058:**	Air temperature	**PR058** = temperature under bonnet ± **5 °C**	In the event of a fault, refer to the interpretation of parameter **PR058 Air temperature**.
5	Coolant temperature sensor	**PR064:**	Coolant temperature	**PR064** = Coolant temperature ± **5 °C**	In the event of a fault, refer to the interpretation of parameter **PR064 Coolant temperature**.
6	Flowmeter	**PR490:**	Engine air flow	Indicates the air flow value in the motorised throttle in kg/h. 0 kg per hour	If there is a fault, refer to the interpretation of **DF095 Throttle potentiometer circuit gang 1** and **DF096 Throttle potentiometer circuit gang 2**.
7	Air pump	**AC016:**	Air pump relay	The relay should be heard clicking.	In the event of a fault, consult the interpretation of **DF547 Air pump relay circuit**.
8	Turbocharging	**AC151:**	Turbocharging valve	The turbocharging valve should be heard clicking.	In the event of a fault, apply the interpretation of command **AC151 Turbocharging valve**.

GETtheMANUALS.org

NOTES	Only check conformity after a **thorough check** with the diagnostic tool. The values indicated in this conformity check are given as examples. **Test condition:** Ignition on, engine off.

SUB FUNCTION: FUEL CIRCUIT

Order	Function	Parameter or Status checked or Action		Display and Notes		Fault finding
1	Engine speed	**PR145:**	Engine speed	**0 rpm**		In the event of a fault, consult the interpretation of fault **DF336 Flywheel signal information.**
2	Idle speed regulation	**ET054:**	Idle speed regulation	**INACTIVE**		If ACTIVE, refer to the interpretation of status **ET054, Idling speed regulation**
3		**PR190:**	Engine idle speed setpoint	**725 < PR145 < 775 rpm**		
4	Richness regulation	**ET300:**	Richness regulation	**INACTIVE**		In the event of a fault, consult the interpretation of the status **ET300 Richness regulation**.
5		**PR438:**	Richness correction value	**50 < PR438 < 250**		In the event of a fault, consult the interpretation of parameter **PR098 Upstream oxygen sensor voltage**.
6		**PR140:**	Idle adaptive richness	**These parameters serve to determine the trend towards increasing richness in the injection system.**	**PR140 ≈ 113**	In the event of a fault, consult the interpretation of status **ET054 Idle speed regulation**.
7		**PR139:**	Operating adaptive richness		**PR139 ≈ 128**	

JSAA5041.0

GETtheMANUALS.org

NOTES	Only check conformity after a **thorough check** with the diagnostic tool. The values indicated in this conformity check are given as examples. **Test condition:** Ignition on, engine off.

SUB-FUNCTION: FUEL CIRCUIT (continued)

Order	Function	Parameter or Status checked or Action	Display and Notes	Fault finding
8	Fuel pump	**ET290:** Fuel pump control relay	**ACTIVE** for a few seconds after the ignition is switched on.	In the event of a fault, refer to interpretation of fault **DF085 Fuel pump relay control circuit**.
9		**AC015:** Fuel pump relay	It should be possible to hear the fuel pump running.	In the event of a fault, refer to interpretation of command **AC015 Fuel pump relay**.

GETtheMANUALS.org

NOTES	Only check conformity after a **thorough check** with the diagnostic tool. The values indicated in this conformity check are given as examples. **Test condition:** Ignition on, engine off.

SUB-FUNCTION: DRIVER PARAMETERS

Order	Function	Parameter or Status checked or Action		Display and Notes	Fault finding
1	Accelerator pedal	**PR030:**	Accelerator pedal position	**15 d° ± 2 d°** (no load) **92 d° ± 4 d°** (full load)	In the event of a fault, consult the interpretation of parameter **PR030 Accelerator pedal position**.
2	Motorised throttle	**PR429:**	Measured throttle position	**20 d° ± 2 d° (pedal released)** **45 d° ± 3 d° (pedal depressed)**	In the event of a fault, consult the interpretation of parameter **PR429 Measured throttle position**.
3		**PR492:**	Reference position of the motorised throttle valve		
4		**PR118:**	Measured throttle position gang 1		
5		**PR119:**	Measured throttle position gang 2		
6		**ET082:**	Motorised throttle position	**CLOSED**	In the event of a fault, run command **RZ019 Reinitialising programming**. If not, contact your Techline.
7	Accelerator pedal	**PR568:**	Pedal position gang 1	**95 d° ± 5 d° (pedal depressed)** **15 d° ± 5 d° (pedal released)** **PR568 ≈ PR569** X 2	In the event of a fault, consult the interpretation of fault **DF008 Pedal potentiometer circuit gang 1**.
8		**PR569:**	Pedal position gang 2	**50 d° ± 5 d° (pedal depressed)** **7 d° ± 5 d° (pedal released)** **PR569 ≈ PR568 /** 2	In the event of a fault, consult the interpretation of fault **DF009 Pedal potentiometer circuit gang 2**.

GETtheMANUALS.org

NOTES	Only check conformity after a **thorough check** with the diagnostic tool. The values indicated in this conformity check are given as examples. **Test condition:** Ignition on, engine off.

SUB-FUNCTION: DRIVER PARAMETERS (continued)

Order	Function	Parameter or Status checked or Action		Display and Notes	Fault finding
9	Motorised throttle	**ET051:**	Throttle stop programming	**DONE**	In the event of a fault, switch off the ignition and wait for dialogue to end. Switch on the ignition again.
10	Vacuum pump	**ET550:**	Vacuum pump control relay	**INACTIVE**	In the event of a fault, consult the interpretation of **DF617 Vacuum pump relay circuit**.
11	Motorised throttle	**AC027:**	Motorised throttle	The motorised throttle should be heard operating	In the event of a fault, refer to the interpretation of command **AC027 Motorised throttle**.
12	Vacuum pump	**AC198:**	Vacuum pump relay	The vacuum pump should be heard operating	In the event of a fault, refer to the interpretation of faults **DF617 Vacuum pump relay circuit** and **DF618 Vacuum pump/pressure switch system**.

GETtheMANUALS.org

NOTES	Only check conformity after a **thorough check** with the diagnostic tool. The values indicated in this conformity check are given as examples. **Test condition:** Ignition on, engine off.

SUB-FUNCTION: IGNITION/PREHEATING

Order	Function	Parameter or Status checked or Action		Display and Notes	Fault finding
1	Flywheel signal	**ET062:**	Flywheel signal	**NOT DETECTED**	In the event of a fault, refer to the interpretation of status **ET062 Flywheel signal**.
2	Pinking sensor	**PR427:**	Average pinking signal	**0**	In the event of a fault, refer to the interpretation **PR427 Average pinking signal**.
3		**PR095:**	Anti-pinking correction	**0 d°**	
4	Combustion misfiring	**ET057:**	Misfires in cylinder 1	**DETECTED** **NOT DETECTED**	In the event of a fault, apply the interpretation of faults **DF123 Pollutant combustion misfiring and DF124 Destructive combustion misfiring**.
5		**ET058:**	Misfires in cylinder 2		
6		**ET059:**	Misfires in cylinder 3		
7		**ET060:**	Misfires in cylinder 4		
8	Injectors	**AC088:**	Injector control locked	This command is used to lock the command for the 4 injectors	In the event of a fault, refer to the interpretation of faults **DF040 Cylinder 1 injector circuit, DF041 Cylinder 2 injector circuit, DF042 Cylinder 3 injector circuit** and **DF043 Cylinder 4 injector circuit**.
9		**AC089:**	Injector control unlocked	This command is used to unlock the command for the 4 injectors	

GETtheMANUALS.org

NOTES	Only check conformity after a **thorough check** with the diagnostic tool. The values indicated in this conformity check are given as examples. **Test condition:** Ignition on, engine off.

SUB-FUNCTION: EMISSION CONTROL/OBD

Order	Function	Parameter or Status checked or Action		Display and Notes	Fault finding
1	Oxygen sensor	**ET052:**	Upstream O_2 sensor heating	**INACTIVE**	In the event of a fault, refer to the interpretation of status **ET052 Upstream O_2 sensor heating**.
2		**ET053:**	Downstream O_2 sensor heating	**INACTIVE**	In the event of a fault, refer to the interpretation of status **ET053 Downstream O_2 sensor heating**.
3		**PR098:**	Upstream oxygen sensor voltage	**Approximately 450 mV**	In the event of a fault, consult the interpretation of parameter **PR098 Upstream oxygen sensor voltage**.
4		**PR099:**	Downstream oxygen sensor voltage	**Approximately 450 mV**	In the event of a fault, consult the interpretation of parameter **PR099 Downstream oxygen sensor voltage**.
5	Canister	**ET050:**	Canister bleed control	**INACTIVE**	In the event of a fault, refer to interpretation of fault **DF081 Canister bleed solenoid valve circuit**.
6	Canister bleed	**AC017:**	Canister bleed solenoid valve	The canister bleed solenoid valve should be heard operating	In the event of a fault, refer to interpretation of command **AC017 Canister bleed solenoid valve**.
7	Oil vapour anti-icing resistor	**AC196:**	Oil vapour anti-icing resistor	The relay should be heard clicking. Check that + 12 V and earth are correctly connected to the anti-icing resistor	If there is a fault, apply the interpretation of command **AC196 Oil vapour anti-icing resistor**.

GETtheMANUALS.org

NOTES	Only check conformity after a **thorough check** with the diagnostic tool. The values indicated in this conformity check are given as examples. **Test condition:** Ignition on, engine off.

SUBSYSTEM: COLD LOOP

Order	Function	Parameter or Status checked or Action		Display and Notes	Fault finding
1	Climate control compressor	**ET214:**	Air conditioning compressor relay control.	**INACTIVE**	In the event of a fault, test the climate control system.
2	Engine speed	**PR145:**	Engine speed	**0 rpm**	In the event of a fault, consult the interpretation of fault **DF336 Flywheel signal information.**
3	Idle speed regulation	**ET219:**	Fast idle speed	**INACTIVE**	In the event of a fault, consult the interpretation of status **ET054 Idle speed regulation**.
4	Coolant temperature sensor	**PR064:**	Coolant temperature	**PR064** = Engine coolant temperature ± **5 °C**	In the event of a fault, refer to the interpretation of parameter **PR064 Coolant temperature**.
5	Vehicle speed	**PR155:**	Vehicle speed	**0 mph**	In the event of a fault, consult the interpretation of fault **DF090 Vehicle speed sensor circuit.**
6	Fan assembly	**ET143:**	Low speed fan unit relay control	If PR064 < 80 °C **INACTIVE**	In the event of a fault, consult the interpretation of status **ET143 Low-speed fan assembly relay control**.
7		**ET144:**	High speed fan unit relay control	**ACTIVE** **INACTIVE**	In the event of a fault, consult the interpretation of status **ET144 High-speed fan assembly relay control**.

GETtheMANUALS.org

NOTES	Only check conformity after a **thorough check** with the diagnostic tool. The values indicated in this conformity check are given as examples. **Test condition:** Ignition on, engine off.

SUB-FUNCTION: COLD LOOP (continued)

Order	Function	Parameter or Status checked or Action		Display and Notes	Fault finding
8	Fan assembly (continued)	**AC038:**	Low speed fan unit relay	You should be able to hear the fan assembly turning at low speed.	In the event of a fault, consult the interpretation of command **AC038 Low-speed fan assembly relay**.
9		**AC039:**	High speed fan unit relay	You should be able to hear the fan assembly turning at high speed.	In the event of a fault, consult the interpretation of command **AC039 High-speed fan assembly relay**.
10	Climate control compressor	**AC070:**	Climate control compressor	The climate control compressor should be heard operating.	In the event of a fault, refer to the interpretation of command **AC070 Climate control compressor**
11	Electric coolant pump	**AC195:**	Electric coolant pump	The electric coolant pump should be heard operating	In the event of a fault, refer to interpretation of command **AC195 Electric coolant pump**.

GETtheMANUALS.org

NOTES	Only check conformity after a **thorough check** with the diagnostic tool. The values indicated in this conformity check are given as examples. **Test condition:** Ignition on, engine off.

SUB-FUNCTION: HEATING

Order	Function	Parameter or Status checked or Action	Display and Notes	Fault finding
1	Coolant temperature sensor	**PR064:** Coolant temperature	**PR064** = Coolant temperature ± **5 °C**	In the event of a fault, refer to the interpretation of parameter **PR064 Coolant temperature**.
2	Thermoplungers	**AC063:** Thermoplunger no. 1 relay	Thermoplunger relay 1 should be heard clicking. Check that + 12 V is reaching the thermoplungers.	In the event of a fault, refer to the interpretation of command **AC063 Thermoplunger no. 1 relay**.
3		**AC149:** Thermoplunger no. 2 relay	Thermoplunger relay 2 should be heard clicking. Check that + 12 V is reaching the thermoplungers.	In the event of a fault, refer to the interpretation of command **AC149 Thermoplunger no. 2 relay**.

GETtheMANUALS.org

NOTES	Only check conformity after a **thorough check** with the diagnostic tool. The values indicated in this conformity check are given as examples. **Test condition:** Ignition on, engine off.

SUB-FUNCTION: CRUISE CONTROL/SPEED LIMITER

Order	Function	Parameter or Status checked or Action		Display and Notes	Fault finding
1	Cruise control/ speed limiter	**ET042:**	Cruise control/ Speed limiter	STATUS 1: SPEED LIMITING STATUS 2: CRUISE CONTROL INACTIVE	In the event of a fault, consult the interpretation of status **ET413 Cruise control/speed limiter function**.
2		**ET413:**	Speed limiter/cruise control function	STATUS 3: INCREASE STATUS 4: DECREASE STATUS 5: SUSPEND STATUS 6: RESUME INACTIVE	
3	Vehicle speed	**PR155:**	Vehicle speed	**0 mph**	In the event of a fault, consult the interpretation of fault **DF090 Vehicle speed sensor circuit.**
4	Brake pedal	**ET237:**	Brake pedal	DEPRESSED (Pedal depressed)	In the event of a fault, consult the interpretation of status **ET237 Brake pedal.**
5		**ET215:**	Redundant brake pedal	DEPRESSED (Pedal depressed, confirmation signal)	In the event of a fault, consult the interpretation of status **ET215 Redundant Brake pedal.**
6	Clutch pedal	**ET233:**	Clutch pedal	DEPRESSED (Pedal depressed) (default value for vehicles fitted with an automatic gearbox).	In the event of a fault, consult the interpretation of status **ET233 Clutch pedal**.

GETtheMANUALS.org

NOTES	Only check conformity after a **thorough check** with the diagnostic tool. The values indicated in this conformity check are given as examples. **Test condition:** Ignition on, engine off.

SUB-FUNCTION: STARTING

Order	Function	Parameter or Status checked or Action	Display and Notes	Fault finding
1	Engine immobiliser	**ET003:** Engine immobiliser	**INACTIVE:** the injection computer has recognised the immobiliser code transmitted by the UCH. **ACTIVE:** the injection computer does not recognise the immobiliser code transmitted by the UCH.	In the event of a fault, consult the interpretation of status **ET003 Engine immobliser**. **If not, test the UCH.**
2	Injection locking	**ET048:** Actuator control relay	**ACTIVE**	If the fault is still present, contact Techline.
3	Power supply	**ET001:** Computer + after ignition feed	**PRESENT**	In the event of a fault, consult the interpretation of parameter **PR071 Computer supply voltage**.
4		**PR071:** Computer supply voltage	**11 V < PR071 < 14 V**	

GETtheMANUALS.org

NOTES	Only check conformity after a **thorough check** with the diagnostic tool. The values indicated in this conformity check are given as examples. **Test condition:** Ignition on, engine off.

SUB-FUNCTION: PROTECTION

Order	Function	Parameter or Status checked or Action		Display and Notes	Fault finding
1	Code programmed	**ET006:**	Code programmed	**Indicates whether or not the immobiliser code has been programmed by the computer.** **YES:** Code programmed **NO:** Code not programmed by the injection computer.	If NO, contact the Techline.
2	Engine immobiliser	**ET003:**	Engine immobiliser	**INACTIVE:** the injection computer has recognised the immobiliser code transmitted by the UCH. **ACTIVE:** the injection computer does not recognise the immobiliser code transmitted by the UCH.	In the event of a fault, consult the interpretation of status **ET003 Engine immobliser**.
3	Impact detected	**ET077:**	Impact detected	**YES** **NO**	If YES, switch off the ignition for 10 seconds, then switch it back on so the engine can be restarted. Clear the faults.
4	Power supply	**PR071:**	Computer supply voltage	**11.8 V < X <13.2 V**	In the event of a fault, consult the interpretation of parameter **PR071 Computer supply voltage**.
5		**ET001:**	Computer + after ignition feed	**PRESENT**	
6	Injection locking	**ET048:**	Actuator control relay	**ACTIVE**	If the fault is still present, contact the Techline.

GETtheMANUALS.org

NOTES	Only check conformity after a **thorough check** with the diagnostic tool. The values indicated in this conformity check are given as examples. **Application conditions:** Engine warm, at idle speed.

MAIN COMPUTER STATUSES AND PARAMETERS:

Order	Function	Parameter or Status checked or Action		Display and Notes	Fault finding
1	Power supply	**PR071:**	Computer supply voltage	**13 V < PR071 < 14.5 V**	In the event of a fault, consult the interpretation of parameter **PR071 Computer supply voltage**.
2		**ET001:**	Computer + after ignition feed	**ACTIVE**	
3	Vehicle speed	**PR155:**	Vehicle speed	**0 mph**	In the event of a fault, consult the interpretation of fault **DF090 Vehicle speed sensor circuit.**
4	Automatic gearbox	**ET063:**	Park/Neutral position	**YES:** AT in park/ neutral position **NO:** AT not in park/ neutral position	In the event of a fault, carry out a multiplex network test, then if the test is correct, look at the automatic gearbox.
5	Mileage	**PR493:**	Mileage with fault warning light lit	Indicates the mileage during which the fault warning light has been illuminated	In the event of a fault, test the ABS system.
6	Pedal assembly	**ET237:**	Brake pedal	**DEPRESSED (pedal depressed)**	In the event of a fault, consult the interpretation of status **ET237 Brake pedal.**
7		**ET233:**	Clutch pedal		In the event of a fault, consult the interpretation of status **ET233 Clutch pedal**.

GETtheMANUALS.org

NOTES	Only check conformity after a **thorough check** with the diagnostic tool. The values indicated in this conformity check are given as examples. **Application conditions:** Engine warm, at idle speed.

SUB-FUNCTION - AIR CIRC. (TURBO/INLET.)

Order	Function	Parameter or Status checked or Action		Display and Notes	Fault finding
1	Atmospheric pressure sensor	**PR035:**	Atmospheric pressure	**900 mb < PR035 < 1000 mb**	In the event of a fault, refer to the interpretation of parameter **PR041 Turbocharging pressure**.
2		**PR421:**	Inlet manifold vacuum	**270 < PR421 < 390 mb**	In the event of a fault, refer to the interpretation of parameter **PR421 Inlet manifold vacuum**.
3	Turbocharging pressure sensor	**PR041:**	Turbocharging pressure	Approximately 1000 mb **PR041 ≈ PR035**	In the event of a fault, refer to the interpretation of parameter **PR041 Turbocharging pressure**.
4	Air temperature sensor	**PR058:**	Air temperature	**PR058** = temperature under bonnet ± **5 °C**	In the event of a fault, refer to the interpretation of parameter **PR058 Air temperature**.
5	Coolant temperature sensor	**PR064:**	Coolant temperature	**PR064** = Coolant temperature ± **5 °C**	In the event of a fault, refer to the interpretation of parameter **PR064 Coolant temperature**.
6	Flowmeter	**PR490:**	Engine air flow	Indicates the air flow value in the motorised throttle. In kg/h.	If there is a fault, refer to the interpretation of **DF095 Throttle potentiometer circuit gang 1** and **DF096 Throttle potentiometer circuit gang 2**.

GETtheMANUALS.org

NOTES	Only check conformity after a **thorough check** with the diagnostic tool. The values indicated in this conformity check are given as examples. **Application conditions:** Engine warm, at idle speed.

SUB-FUNCTION - AIR CIRC. (TURBO/INLET.) (continued)

Order	Function	Parameter or Status checked or Action	Display and Notes	Fault finding
7	Air pump (only on vehicles fitted with an automatic gearbox)	**AC016:** Air pump relay	**DO NOT RUN THESE COMMANDS WITH THE ENGINE RUNNING**	
8	Turbocharging valve	**AC151:** Turbocharging valve	**DO NOT RUN THESE COMMANDS WITH THE ENGINE RUNNING**	

GETtheMANUALS.org

NOTES	Only check conformity after a **thorough check** with the diagnostic tool. The values indicated in this conformity check are given as examples. **Application conditions:** Engine warm, at idle speed.

SUB FUNCTION: FUEL CIRCUIT

Order	Function	Parameter or Status checked or Action		Display and notes		Fault finding
1	Engine speed	**PR145:**	Engine speed	**725 < PR145 < 775 rpm**		In the event of a fault, consult the interpretation of fault **DF336 Flywheel signal information.**
2	Idling speed	**ET054:**	Idle speed regulation	**ACTIVE**		If **INACTIVE**, refer to the interpretation of status **ET054 Idle speed regulation**.
3		**PR190:**	Engine idle speed setpoint.	**725 < PR145 < 775 rpm**		
4	Richness regulation	**ET300:**	Richness regulation	**ACTIVE**		In the event of a fault, consult the interpretation of status **ET300 Richness regulation**.
5		**PR438:**	Richness correction value	**50 < PR438 < 250**		In the event of a fault, consult the interpretation of parameter **PR098 Upstream oxygen sensor voltage**.
6		**PR140:**	Idle speed richness adaptive	**These parameters serve to determine the trend towards increasing richness in the injection system.**	**PR140 ≈ 113**	None
7		**PR139:**	Operating richness adaptive		**PR139 ≈ 128**	

GETtheMANUALS.org

NOTES	Only check conformity after a **thorough check** with the diagnostic tool. The values indicated in this conformity check are given as examples. **Application conditions:** Engine warm, at idle speed.

SUB-FUNCTION: FUEL CIRCUIT (continued)

Order	Function	Parameter or Status checked or Action	Display and Notes	Fault finding
8	Fuel pump	**ET290:** Petrol pump control relay	**ACTIVE**	If **INACTIVE**, refer to the interpretation of fault **DF085 Fuel pump relay control circuit**.
9		**AC015:** Fuel pump relay	**DO NOT RUN THIS COMMAND WITH THE ENGINE RUNNING**	

GETtheMANUALS.org

NOTES	Only check conformity after a **thorough check** with the diagnostic tool. The values indicated in this conformity check are given as examples. **Application conditions:** Engine warm, at idle speed.

SUB-FUNCTION: DRIVER PARAMETERS

Order	Function	Parameter or Status checked or Action		Display and Notes	Fault finding
1	Accelerator pedal	**PR030:**	Accelerator pedal position	**15 d° ± 2 d° (no load)** **92 d° ± 4 d° (full load)**	In the event of a fault, consult the interpretation of parameter **PR030 Accelerator pedal position**.
2	Motorised throttle	**PR429:**	Measured throttle position	**20 d° ± 2 d° (pedal released)** **45 d° ± 3 d° (pedal depressed)**	In the event of a fault, consult the interpretation of parameter **PR429 Measured throttle position**.
3		**PR492:**	Reference position of the motorised throttle valve		
4		**PR118:**	Measured throttle position gang 1		
5		**PR119:**	Measured throttle position gang 2		
6		**ET082:**	Motorised throttle position	**CLOSED: pedal released** **OPEN: pedal depressed**	In the event of a fault, run command **RZ019 Reinitialising programming**. If not, contact your Techline.
7	Accelerator pedal	**PR568:**	Pedal position gang 1	**95 d° ± 5 d° (pedal depressed)** **15 d° ± 5 d° (pedal released)**	In the event of a fault, consult the interpretation of fault **DF008 Pedal potentiometer circuit gang 1**.
8		**PR569:**	Pedal position gang 2	**50 d° ± 5 d° (pedal depressed)** **7 d° ± 5 d° (pedal released)**	In the event of a fault, consult the interpretation of fault **DF009 Pedal potentiometer circuit gang 2**.

GETtheMANUALS.org

NOTES	Only check conformity after a **thorough check** with the diagnostic tool. The values indicated in this conformity check are given as examples. **Application conditions:** Engine warm, at idle speed.

SUB-FUNCTION: DRIVER PARAMETERS (continued)

Order	Function	Parameter or Status checked or Action		Display and Notes	Fault finding
9	Vacuum pump	**ET550:**	Vacuum pump relay control	**ACTIVE (after pressing the brake pedal several times)**	In the event of a fault, consult the interpretation of **DF617 Vacuum pump relay circuit**.
10	Motorised throttle	**ET051:**	Throttle stop programming	**DONE**	In the event of a fault, switch off the ignition and wait for dialogue to end. Switch on the ignition again.
11	Motorised throttle	**AC027:**	Motorised throttle	**DO NOT RUN THIS COMMAND WITH THE ENGINE RUNNING**	
12	Vacuum pump	**AC198:**	Vacuum pump relay		

GETtheMANUALS.org

NOTES	Only check conformity after a **thorough check** with the diagnostic tool. The values indicated in this conformity check are given as examples. **Application conditions:** Engine warm, at idle speed.

SUB-FUNCTION: IGNITION/PREHEATING

Order	Function	Parameter or Status checked or Action		Display and Notes	Fault finding
1	Flywheel signal	**ET062:**	Flywheel signal	**DETECTED**	In the event of a fault, refer to the interpretation of status **ET062 Flywheel signal**.
2	Pinking sensor	**PR427:**	Average pinking signal	Must not be equal to 0. Must vary with changes in speed.	In the event of a fault, consult the interpretation of parameter **PR427 Average pinking signal**.
3		**PR095:**	Anti-pinking correction	**PR095 ≤ 5 d°**	
4	Combustion misfiring	**ET057:**	Misfires in cylinder 1	**DETECTED** **NOT DETECTED**	If DETECTED, refer to the interpretation of faults **DF123 Pollutant combustion misfiring and DF124 Destructive combustion misfiring**.
5		**ET058:**	Misfires in cylinder 2		
6		**ET059:**	Misfires in cylinder 3		
7		**ET060:**	Misfires in cylinder 4		
8	Injectors	**AC088:**	Injector command locking	**DO NOT RUN THESE COMMANDS WITH THE ENGINE RUNNING**	
9		**AC089:**	Injector command unlocking		

GETtheMANUALS.org

NOTES	Only check conformity after a **thorough check** with the diagnostic tool. The values indicated in this conformity check are given as examples. **Application conditions:** Engine warm, at idle speed.

SUB-FUNCTION: EMISSION CONTROL/OBD

Order	Function	Parameter or Status checked or Action		Display and Notes	Fault finding
1	Oxygen sensor	**ET052:**	Upstream O_2 sensor heating	**ACTIVE** **INACTIVE**	In the event of a fault, refer to the interpretation of status **ET052 Upstream O_2 sensor heating**.
2		**ET053:**	Downstream O_2 sensor heating	**ACTIVE** **INACTIVE**	In the event of a fault, refer to the interpretation of status **ET053 Downstream O_2 sensor heating**.
3		**PR098:**	Upstream oxygen sensor voltage	The voltage should vary continually between the minimum and maximum values. The minimum value should be between **25 mV** and **200 mV**. The maximum value should be between **600** and **1000 mV**.	In the event of a fault, refer to the interpretation of parameter **PR098 Upstream oxygen sensor voltage**.
4		**PR099:**	Downstream oxygen sensor voltage	The voltage should be stable. It must be between **25** and **1000 mV.**	In the event of a fault, consult the interpretation of parameter **PR099 Downstream oxygen sensor voltage**.
5	Canister bleed	**ET050:**	Canister bleed control	**ACTIVE** **INACTIVE**	In the event of a fault, refer to the interpretation of fault **DF081 Canister bleed solenoid valve circuit**.
6	Canister bleed	**AC017:**	Canister bleed solenoid valve	**DO NOT RUN THESE COMMANDS WITH THE ENGINE RUNNING**	
7	Oil vapour anti-icing resistor	**AC196:**	Oil vapour anti-icing resistor		

GETtheMANUALS.org

NOTES	Only check conformity after a **thorough check** with the diagnostic tool. The values indicated in this conformity check are given as examples. **Application conditions:** Engine warm, at idle speed.

SUBSYSTEM: COLD LOOP

Order	Function	Parameter or Status checked or Action		Display and Notes	Fault finding
1	Climate control compressor	**ET214:**	Air conditioning compressor relay control	**INACTIVE**	In the event of a fault, test the climate control system.
2	Engine speed	**PR145:**	Engine speed	**725 < PR145 < 775 rpm**	In the event of a fault, consult the interpretation of status **ET054 Idle speed regulation**.
3	Idling speed	**ET219:**	Fast idle speed	**INACTIVE**	In the event of a fault, consult the interpretation of status **ET054 Idle speed regulation**.
4	Coolant temperature sensor	**PR064:**	Coolant temperature	**PR064** = Engine coolant temperature ± **5 °C**	In the event of a fault, refer to the interpretation of parameter **PR064 Coolant temperature**.
5	Vehicle speed	**PR155:**	Vehicle speed	**0 mph**	In the event of a fault, consult the interpretation of fault **DF090 Vehicle speed sensor circuit.**
6	Fan assembly	**ET143:**	Low speed fan unit relay control	**ACTIVE INACTIVE**	In the event of a fault, consult the interpretation of status **ET143 Low speed fan assembly relay control**.
7		**ET144:**	High speed fan unit relay control	**ACTIVE INACTIVE**	In the event of a fault, consult the interpretation of status **ET144 High speed fan assembly relay control**.
8		**AC038:**	Low speed fan unit relay	**DO NOT RUN THESE COMMANDS WITH THE ENGINE RUNNING**	
9		**AC039:**	High speed fan unit relay		

GETtheMANUALS.org

NOTES	Only check conformity after a **thorough check** with the diagnostic tool. The values indicated in this conformity check are given as examples. **Application conditions:** Engine warm, at idle speed.

SUB-FUNCTION: COLD LOOP (CONTINUED)

Order	Function	Parameter or Status checked or Action		Display and Notes	Fault finding
10	Climate control compressor	**AC070:**	Climate control compressor	**DO NOT RUN THESE COMMANDS WITH THE ENGINE RUNNING**	
11	Electric coolant pump	**AC195:**	Electric coolant pump		

GETtheMANUALS.org

NOTES	Only check conformity after a **thorough check** with the diagnostic tool. The values indicated in this conformity check are given as examples. **Application conditions:** Engine warm, at idle speed.

SUB-FUNCTION: HEATING

Order	Function	Parameter or Status checked or Action		Display and Notes	Fault finding
1	Coolant temperature sensor	**PR064:**	Coolant temperature	**PR064** = Engine coolant temperature ± **5 °C**	In the event of a fault, refer to the interpretation of parameter **PR064 Coolant temperature**.
2	Thermoplungers	**AC063:**	Thermoplunger no. 1 relay	**DO NOT RUN THESE COMMANDS WITH THE ENGINE RUNNING**	
3		**AC149:**	Thermoplunger no. 2 relay		

GETtheMANUALS.org

NOTES	Only check conformity after a **thorough check** with the diagnostic tool. The values indicated in this conformity check are given as examples. **Application conditions:** Engine warm, at idle speed.

CRUISE CONTROL/SPEED LIMITER SUB-FUNCTION

Order	Function	Parameter or Status checked or Action		Display and Notes	Fault finding
1	Cruise control/ speed limiter	**ET042:**	Cruise control/ Speed limiter	STATUS 1: SPEED LIMITING STATUS 2: CRUISE CONTROL INACTIVE	In the event of a fault, consult the interpretation of status **ET413 Cruise control/speed limiter function**.
2		**ET413:**	Speed limiter/ cruise control function	STATUS 3: INCREASE STATUS 4: DECREASE STATUS 5: SUSPEND STATUS 6: RESUME INACTIVE	
3	Vehicle speed	**PR155:**	Vehicle speed	**0 mph**	In the event of a fault, consult the interpretation of fault **DF090 Vehicle speed sensor circuit.**
4	Brake pedal	**ET237:**	Brake pedal	DEPRESSED (Pedal depressed)	In the event of a fault, consult the interpretation of status **ET237 Brake pedal.**
5		**ET215:**	Redundant brake pedal	DEPRESSED (Pedal depressed, confirmation signal)	In the event of a fault, consult the interpretation of status **ET215 Redundant Brake pedal.**
6	Clutch pedal	**ET233:**	Clutch pedal	DEPRESSED (Pedal depressed) (default value for vehicles fitted with an automatic gearbox).	In the event of a fault, consult the interpretation of status **ET233 Clutch pedal**.

GETtheMANUALS.org

NOTES	Only check conformity after a **thorough check** with the diagnostic tool. The values indicated in this conformity check are given as examples. **Application conditions:** Engine warm, at idle speed.

SUB-FUNCTION: STARTING

Order	Function	Parameter or Status checked or Action	Display and Notes	Fault finding
1	Engine immobiliser	**ET003:** Engine immobiliser	**INACTIVE**	In the event of a fault, consult the interpretation of status **ET003 Engine immobliser**.
2	Injection locking	**ET048:** Actuator control relay	**ACTIVE**	If the fault is still present, contact Techline.
3	Power supply	**ET001:** Computer + after ignition feed	**PRESENT**	In the event of a fault, consult the interpretation of parameter **PR071 Computer supply voltage**.
4		**PR071:** Computer supply voltage	**13 V < X < 14.5 V**	

GETtheMANUALS.org

NOTES	Only check conformity after a **thorough check** with the diagnostic tool. The values indicated in this conformity check are given as examples. **Application conditions:** Engine warm, at idle speed.

SUB-FUNCTION: PROTECTION

Order	Function	Parameter or Status checked or Action		Display and Notes	Fault finding
1	Code programmed	**ET006:**	Code programmed	**YES**	If NO, contact the Techline.
2	Engine immobiliser	**ET003:**	Engine immobiliser	**INACTIVE**	In the event of a fault, consult the interpretation of status **ET003 Engine immobliser**.
3	Impact detected	**ET077:**	Impact detected	**YES** **NO**	If YES, switch off the ignition for 10 seconds, then switch it back on so the engine can be restarted. Clear the faults.
4	Power supply	**PR071:**	Computer supply voltage	**13 V < PR071 < 14.5 V**	In the event of a fault, consult the interpretation of parameter **PR071 Computer supply voltage**.
5		**ET001:**	Computer + after ignition feed	**PRESENT**	
6	Injection locking	**ET048:**	Actuator control relay	**INACTIVE**	If the fault is still present, contact Techline.

GETtheMANUALS.org

Tool status	Diagnostic tool title
ET001	Computer + after ignition feed
ET003	Engine immobiliser
ET006	Code programmed
ET042	Cruise control/speed limiter
ET048	Actuator control relay
ET050	Canister bleed control
ET051	Throttle stop programming
ET052	Upstream O_2 sensor heating
ET053	Downstream O_2 sensor heating
ET054	Idle speed regulation
ET057	Misfires in cylinder 1
ET058	Misfires in cylinder 2
ET059	Misfires in cylinder 3
ET060	Misfires in cylinder 4
ET062	Flywheel signal
ET063	Park/Neutral position
ET077	Impact detected
ET081	Accelerator pedal position
ET082	Motorised throttle position
ET143	Low speed fan unit relay control
ET144	High speed fan unit relay control
ET214	Air conditioning compressor relay control.
ET215	Redundant brake pedal
ET219	Fast idle speed
ET233	Clutch pedal
ET237	Brake pedal
ET290	Petrol pump control relay
ET300	Richness regulation
ET413	Cruise control/speed limiter function
ET542	Oil vapour anti-icing resistor
ET550	Vacuum pump control relay

GETtheMANUALS.org

ET003	ENGINE IMMOBILISER

NOTES	**None.**

Test the multiplex network. **(see 88B, Multiplexing).**
If the fault does not disappear, carry out fault finding on the Immobiliser system. **(see 82A Engine immobliser.)**

AFTER REPAIR	Repeat the conformity check from the start.

GETtheMANUALS.org

ET052	UPSTREAM O2 SENSOR HEATING

NOTES	There must be no present or stored faults.

Check the **cleanliness and condition** of the upstream oxygen sensor and its connections. Clean or replace as necessary.
Check the **heating resistance** of the upstream oxygen sensor (see the value in the **Help** section). Replace the upstream oxygen sensor if necessary.
Check for **+ 12 V feed on track A** of the upstream oxygen sensor connector with the ignition on. Repair if necessary.
Disconnect the battery. Disconnect the computer. Check the **cleanliness and condition** of the connections. Use the bornier to check the **insulation, continuity and the absence of interference resistance** on the following connection: **Computer track G1, connector C** ⟶ **Upstream oxygen sensor, track A** Repair if necessary.
If the fault is still present, replace the upstream oxygen sensor.

AFTER REPAIR	Repeat the conformity check from the start.

GETtheMANUALS.org

ET053	DOWNSTREAM O_2 SENSOR HEATING

NOTES	There must be no present or stored faults.

Check **the cleanliness and condition** of the downstream oxygen sensor and its connections. Clean or replace as necessary.
Check the **heating resistance** of the downstream oxygen sensor (see the value in the **Help** section). Replace the downstream oxygen sensor if necessary.
Check for **+ 12 V feed on track A** of the downstream oxygen sensor connector with the ignition on. Repair if necessary.
Disconnect the battery. Disconnect the computer. Check the **cleanliness and condition** of the connections. Use the bornier to check the **insulation, continuity and the absence of interference resistance** on the following connection: **Computer track G3, connector C** ⟶ **Downstream oxygen sensor, track B** Repair if necessary.
If the fault is still present, replace the downstream oxygen sensor.

AFTER REPAIR	Repeat the conformity check from the start.

GETtheMANUALS.org

ET054	IDLE SPEED REGULATION

NOTES	There must be no present or stored faults.

Check parameters PR421 Inlet manifold vacuum, PR064 Coolant temperature, PR058 Air temperature, PR429 Measured throttle position and PR030 Accelerator pedal position.
Check that all these parameters are perfectly correct.

Check:
– the engine oil level (too high ⇒ splashing),
– that the exhaust pipe is not blocked (catalytic converter damaged),
– the cleanliness and conformity of the air filter,
– that the air inlet system is not blocked,
– that the throttle valve is not clogged,
– the condition and conformity of the spark plugs,
– the fuel circuit sealing,
– the fuel flow rate and pressure,
– the condition and cleanliness of the injectors,
– the engine compression,
– the timing adjustment,
– the hydraulic tappets if there is camshaft noise.

Check:
– the engine oil level (too high ⇒ oil combustion),
– that the restrictions are present in the oil vapour rebreathing circuit,
– the sealing between the throttle valve and inlet manifold,
– the manifold pressure sensor sealing,
– the fuel vapour absorber bleed, which should not be jammed open,
– that there are no leaks in the fuel vapour absorber bleed circuit,
– the brake servo system sealing,
– that there are no leaks in the turbocharger safety valve circuit,
– the sealing between the inlet manifold and cylinder head,
– the oil vapour recovery circuit sealing between the inlet manifold and cylinder head,
– the fuel flow rate and pressure,
– the condition and cleanliness of the injectors,
– the engine compression,
– the timing adjustment,
– the hydraulic tappets if there is camshaft noise.

AFTER REPAIR	Repeat the conformity check from the start.

GETtheMANUALS.org

ET062	FLYWHEEL SIGNAL

NOTES	There must be no present or stored faults.

Check **the cleanliness and condition** of the target sensor, the cable and its connections.
Clean or replace as necessary.

Check that the engine flywheel is **mounted correctly**.
Check the **air gap** between the sensor and the flywheel.

Disconnect the battery.
Disconnect the computer. Check the **cleanliness and condition** of the connections.
Use the bornier to check the **insulation, continuity and the absence of interference resistance** on the following connections:

Computer track E4, connector B → **Track B, TDC sensor**
Computer track F3, connector B → **Track A, TDC sensor**

Repair if necessary.

Check **the electrical resistance** of the sensor (see the value in the **Help** section).
If necessary replace the sensor.

If there is still a fault, **check the cleanliness and condition** of the flywheel.

If the fault persists, replace the sensor.

AFTER REPAIR	Repeat the conformity check from the start.

GETtheMANUALS.org

ET143	LOW-SPEED FAN ASSEMBLY RELAY CONTROL

NOTES	There must be no present or stored faults.

Check the cleanliness and general condition of the fan assembly (no hard point).
Check **the cleanliness and condition** of the low-speed fan relay and its connections. Clean or replace as necessary.
Disconnect the low-speed fan relay. Check for **+ 12 V on track 3** on the connector end of the relay. With the ignition on, check for **+ 12 V on track 1** of the relay, connector end. Repair if necessary.
Check **the resistance of the low-speed fan relay** across **tracks 1 and 2** (see the value in the **Help** section). Replace the low-speed fan relay if necessary.
Disconnect the battery. Disconnect the computer. Check the **cleanliness and condition** of the connections. Use the bornier to check the **insulation, continuity and the absence of interference resistance** on the following connection: Computer connector **C track F1** ⟶ **Low-speed fan assembly relay, track 11** Repair if necessary.
Disconnect the low-speed fan relay. Check **the insulation, the continuity and the absence of interference resistance** of the connection between **track 5** of the relay and the fan assembly. Repair if necessary.
Check **the insulation, continuity and absence of interference resistance** on the fan unit's earth connection. Repair if necessary.
If that still does not work, replace the fan assembly.

AFTER REPAIR	Repeat the conformity check from the start.

GETtheMANUALS.org

ET144	HIGH-SPEED FAN ASSEMBLY RELAY CONTROL

NOTES	There must be no present or stored faults.

Check the cleanliness and general condition of the fan assembly (no hard point).
Check **the cleanliness and condition** of the high-speed fan relay and its connections. Clean or replace as necessary.
Disconnect the high-speed fan relay. Check for **+ 12 V on track 3** of the relay, connector end. With the ignition on, check for **+ 12 V on track 1** of the relay, connector end. Repair if necessary.
Check **the resistance of the high-speed fan relay** across **tracks 1 and 2** (see the value in the **Help** section). Replace the high-speed fan relay if necessary.
Disconnect the battery. Disconnect the computer. Check the **cleanliness and condition** of the connections. Use the bornier to check the **insulation, continuity and the absence of interference resistance** on the following connection: **Computer track F2, connector C ⟶ High speed fan assembly relay, track 7** Repair if necessary.
Disconnect the high-speed fan relay. Check **the insulation, continuity and absence of interference resistance** on the connection between track 5 of the relay and the high-speed fan. Repair if necessary.
Check **the insulation, continuity and absence of interference resistance** on the fan unit's earth connection. Repair if necessary.
If that still does not work, replace the fan assembly.

AFTER REPAIR	Repeat the conformity check from the start.

GETtheMANUALS.org

ET215	REDUNDANT BRAKE PEDAL

NOTES	There must be no present or stored faults.

Test the multiplex network.

(see 88B, Multiplexing).

If the fault has not been resolved, carry out a fault finding procedure on the ESP/ABS systems.

(see 38 C Anti-lock braking system.)

AFTER REPAIR	Repeat the conformity check from the start.

GETtheMANUALS.org

ET233	CLUTCH PEDAL

NOTES	

Check that the pedal assembly is in good condition.
Check **the cleanliness and condition** of the clutch pedal switch and its connections. Clean or replace as necessary.
Check for the presence of earth on the clutch pedal switch. Repair if necessary.
Disconnect the battery. Disconnect the computer. Check the **cleanliness and condition** of the connections. Use the bornier to check the **insulation, continuity and the absence of interference resistance** on the following connection: **Computer track C4, connector A ⟶ Clutch pedal switch, track B3** Repair if necessary.
If that still does not work, replace the switch.

AFTER REPAIR	Repeat the conformity check from the start.

GETtheMANUALS.org

ET237	BRAKE PEDAL

NOTES	There must be no present or stored faults.

Check that the pedal assembly is in good condition.
Check **the cleanliness and condition** of the dual-contact brake switch and its connections. Replace as necessary.
Disconnect the battery. Disconnect the computer. Check the **cleanliness and condition** of the connections. Use the bornier to check the **insulation, continuity and the absence of interference resistance** on the following connection: **Computer track E4, connector A ⟶ Brake pedal, track B3** Repair if necessary.
If that still does not work, replace the switch.
Refer to the ABS fault finding procedure if necessary.

AFTER REPAIR	Repeat the conformity check from the start.

GETtheMANUALS.org

ET300	MIXTURE CONTROL

NOTES	There must be no present or stored faults.

Check the **cleanliness and condition** of the upstream oxygen sensor and its connections.
Clean or replace as necessary.

Check the **heating resistance** of the upstream oxygen sensor (see the value in the **Help** section).
Replace the upstream oxygen sensor if necessary.

Check the **resistance of the upstream oxygen sensor signal circuit (check the value in the Help section)**.
Replace the upstream oxygen sensor if necessary.

With the ignition on, check for **+ 12 Volts on the** upstream oxygen sensor connector.
Repair if necessary.

Disconnect the battery.
Disconnect the computer. Check the **cleanliness and condition** of the connections.
Use the bornier to check the insulation, **continuity and the absence of interference resistance** on the following connections:

Computer track C1, connector C → **Upstream oxygen sensor, track D**
Computer track B1, connector C → **Upstream oxygen sensor, track C**
Computer track G1, connector C → **Upstream oxygen sensor, track B**

Repair if necessary.

Check **the condition and fitting** of the upstream oxygen sensor.

If the vehicle is driven frequently in town, **carry out the unclogging procedure**.

Check:
– the condition of the air filter,
– that the air inlet system is not blocked,
– the condition and conformity of the spark plugs,
– the sealing between the throttle valve and inlet manifold,
– the manifold pressure sensor sealing,
– the fuel vapour absorber bleed, which should not be jammed open,
– that there are no leaks in the fuel vapour absorber bleed circuit,
– the brake servo system sealing,
– the turbocharger safety valve circuit sealing,
– the cylinder head oil vapour recovery system sealing,
– the sealing between the inlet manifold and cylinder head,
– the exhaust pipe sealing between the cylinder head and catalytic converter,
– the fuel flow rate and pressure.

AFTER REPAIR	Repeat the conformity check from the start.

GETtheMANUALS.org

ET300 **CONTINUED**	

If the idling speed is not stable, **check**:
– the timing adjustment,
– the hydraulic tappets if there is camshaft noise,
– the cylinder compression.

Drive the vehicle to check the repair.

AFTER REPAIR	Repeat the conformity check from the start.

GETtheMANUALS.org

ET413	CRUISE CONTROL/SPEED LIMITER FUNCTION

NOTES	There must be no present or stored faults.
	WARNING **It is necessary to remove the airbag in order to remove or check the Cruise control/speed limiter control switches.** **See the Workshop Repair Manual, section 88C Airbag.**

Check **the cleanliness, connection and condition of the** of the cruise control/speed limiter start switch and the connection and condition of its connector.
Replace as necessary.

Disconnect the battery.
Disconnect the computer. Check the **cleanliness and condition** of the connections.
Use the bornier to check the **insulation, continuity and the absence of interference resistance** on the following connections:

Computer track A2, connector A → On/Off switch, track A3
Computer track C3, connector A → On/Off switch, track B1

Repair if necessary.

If the fault is still present, replace the switch.

Check **the cleanliness, connection and condition** of the incrementing switches on the steering wheel and their connectors.
Replace as necessary.

Disconnect the battery.
Disconnect the computer. Check the **cleanliness and condition** of the connections.
Use the bornier to check the **insulation, continuity and the absence of interference resistance** on the following connections:

Computer track D2, connector A → Steering wheel control, track A2
Computer track D3, connector A → Steering wheel control, track A1

Repair if necessary.

If the fault is still present, replace the faulty switch.

AFTER REPAIR	Repeat the conformity check from the start.

GETtheMANUALS.org

Tool parameter	Diagnostic tool title
PR030	Accelerator pedal position
PR035	Atmospheric pressure
PR041	Turbocharging pressure
PR058	Air temperature
PR064	Coolant temperature
PR071	Computer supply voltage
PR095	Anti-pinking correction
PR098	Upstream oxygen sensor voltage
PR099	Downstream oxygen sensor voltage
PR118	Measured throttle position gang 1
PR119	Measured throttle position gang 2
PR139	Operating richness adaptive
PR140	Idle richness adaptive
PR145	Engine speed
PR155	Vehicle speed
PR190	Engine idle speed setpoint.
PR421	Inlet manifold vacuum
PR427	Average pinking signal
PR429	Measured throttle position
PR431	Idling RCO signal adaptive
PR438	Richness correction value
PR449	Set idling speed in After Sales
PR490	Engine air flow
PR492	Reference position of the motorised throttle valve
PR493	Mileage with fault warning light lit
PR568	Pedal position gang 1
PR569	Pedal position gang 2

GETtheMANUALS.org

PR030	ACCELERATOR PEDAL POSITION

NOTES	There must be no present or stored faults.

Check that the pedal mechanism has not seized.

Check the **cleanliness and condition** of the pedal potentiometer connections.
Clean or replace as necessary.

Disconnect the battery.
Disconnect the computer. Check the **cleanliness and condition** of the connections.
Use the bornier to check the **insulation, continuity and the absence of interference resistance** on the following connections:

- **Computer track H3, connector A → Pedal potentiometer, track 2**
- **Computer track G2, connector A → Pedal potentiometer, track 4**
- **Computer track H2, connector A → Pedal potentiometer, track 3**
- **Computer track F4, connector A → Pedal potentiometer, track 1**
- **Computer track F2, connector A → Pedal potentiometer, track 5**
- **Computer track F3, connector A → Pedal potentiometer, track 6**

Repair if necessary.

Check that **the resistances of pedal potentiometer gangs 1 and 2** correctly follow their curves of resistance (see the values in the **Help** section).
Replace the pedal potentiometer if necessary.

If the fault is still present, replace the pedal potentiometer.

AFTER REPAIR	Repeat the conformity check from the start.

GETtheMANUALS.org

PR041	TURBOCHARGING PRESSURE

NOTES	There must be no present or stored faults.

Check **the cleanliness and condition** of the turbocharging pressure sensor and its connections.
Clean or replace as necessary.

Disconnect the battery.
Disconnect the computer. Check the **cleanliness and condition** of the connections.
Use the bornier to check the **insulation, continuity and the absence of interference resistance** on the following connections:

Computer track E1, connector B → Pressure sensor, track 2
Computer track F1, connector B → Pressure sensor, track 3
Computer track G1, connector B → Pressure sensor, track 1

Repair if necessary.

If the fault is still present, replace the sensor.

If the fault persists, carry out the following checks:

Check the cleanliness of the air filter.
Replace the filter if necessary.
Check that the air inlet system is not blocked.

The turbocharging system must be perfectly sealed, from the exhaust manifold to the turbocharger, from the turbocharger to the heat exchanger and from the heat exchanger to the throttle valve.
Check that there are no air leaks:
– around the turbocharger pressure sensor,
– around the air temperature sensor.

Check absence of leaks in the wastegate capsule pressure circuit connected to the turbocharger system.

Check that the air-air heat exchanger is not clogged (presence of oil).
If there is oil in the heat exchanger, the turbocharger is certainly damaged.

Using a pressure/vacuum pump, check that the turbocharger protection and turbocharging valve capsule diaphragms do not leak.

AFTER REPAIR	Repeat the conformity check from the start.

GETtheMANUALS.org

PR041 **CONTINUED**	

Check that the wastegate solenoid valve is not jammed (mechanically seized).
To do this, run the wastegate solenoid valve command **AC151 Turbocharging valve**.
This command is used to listen to the solenoid valve.
If the solenoid valve does not click, run the **DF571 Turbocharging valve** Turbocharging valve fault finding procedure.

If no fault is found in the turbocharging system, there must be a **mechanical fault** with the turbocharger.
Test the turbocharger.

AFTER REPAIR	Repeat the conformity check from the start.

GETtheMANUALS.org

PR058	AIR TEMPERATURE

NOTES	There must be no present or stored faults.

Check **the cleanliness and condition** of the air temperature sensor and its connections.
Clean or replace as necessary.

Check the **resistance** of the manifold air temperature sensor at various temperatures (see the values in the **Help** section).
Replace the air temperature sensor, if necessary.

Disconnect the battery.
Disconnect the computer. Check the **cleanliness and condition** of the connections.
Use the bornier to check the **insulation, continuity and the absence of interference resistance** on the following connections:

Computer track E3, connector B → **Air temperature sensor, track 2**
Computer track E2, connector B → **Air temperature sensor, track 1**

Repair if necessary.

If the fault persists, replace the sensor.

AFTER REPAIR	Repeat the conformity check from the start.

GETtheMANUALS.org

PR064	COOLANT TEMPERATURE

NOTES	There must be no present or stored faults.

Check **the cleanliness and condition** of the coolant temperature sensor and its connections.
Clean or replace as necessary.

Check the **resistance** of the coolant temperature sensor at various temperatures (see the values in the **Help** section).
Replace the coolant temperature sensor, if necessary.

Disconnect the battery.
Disconnect the computer. Check the **cleanliness and condition** of the connections.
Use the bornier to check the **insulation, continuity and the absence of interference resistance** on the following connections:

Computer track F2, connector B → **Coolant temperature sensor, track B2**
Computer track F4, connector B → **Coolant temperature sensor, track B1**

Repair if necessary.

If the fault persists, replace the sensor.

AFTER REPAIR	Repeat the conformity check from the start.

GETtheMANUALS.org

PR071	COMPUTER SUPPLY VOLTAGE

NOTES	There must be no present or stored faults. **No electrical consumers.**

Ignition on	**If the voltage is minimum:** Check the battery and the charge circuit.
	If the voltage is maximum: Check that the charging voltage is correct with and without electrical consumers switched on.

At idle speed	**If the voltage is minimum:** Check the battery and the charge circuit.
	If the voltage is maximum: Check that the charging voltage is correct with and without electrical consumers switched on.

AFTER REPAIR	Repeat the conformity check from the start.

GETtheMANUALS.org

PR098	UPSTREAM OXYGEN SENSOR VOLTAGE

NOTES	There must be no present or stored faults.

Check **the cleanliness and condition** of the upstream oxygen sensor connections. Replace the connector if necessary.
With the ignition on, check for **+ 12 Volts** on the upstream oxygen sensor. Repair if necessary.
Disconnect the battery. Disconnect the computer. Check the **cleanliness and condition** of the connections. Use the bornier to check the **insulation, continuity and the absence of interference resistance** on the following connections: **Computer track C1, connector C → Upstream oxygen sensor, track C** **Computer track B1, connector C → Upstream oxygen sensor, track D** Repair if necessary.
Check **the fitting** of the upstream oxygen sensor.
If the vehicle is driven frequently in town, **carry out the unclogging procedure**.
Check that **there are no leaks** in the exhaust system, from the manifold to the catalytic converter.
Replace the upstream oxygen sensor.
If the fault persists, carry out the checks on the following page.

AFTER REPAIR	Repeat the conformity check from the start.

GETtheMANUALS.org

PR098 **CONTINUED**	

Check:
- the condition of the air filter,
- that the air inlet system is not blocked,
- the condition and conformity of the spark plugs,
- that the catalytic converter is not clogged,
- the sealing between the throttle valve and inlet manifold,
- the manifold pressure sensor sealing,
- the fuel vapour absorber bleed, which should not be jammed open,
- that there are no leaks in the fuel vapour absorber bleed circuit,
- the brake servo system sealing,
- the turbocharger safety valve circuit sealing,
- the cylinder head oil vapour recovery system sealing,
- the sealing between the inlet manifold and cylinder head,
- the exhaust pipe sealing between the cylinder head and catalytic converter,
- the fuel flow rate and pressure.

If the idling speed is not stable, **check**:
- the timing adjustment,
- the cylinder compression.

If the fault is still present, replace the upstream oxygen sensor.

Drive the vehicle to check the repair.

AFTER REPAIR	Repeat the conformity check from the start.

GETtheMANUALS.org

PR099	DOWNSTREAM OXYGEN SENSOR VOLTAGE

NOTES	There must be no present or stored faults.

Check **the cleanliness and condition** of the downstream oxygen sensor connections. Replace the connector if necessary.
With the ignition on, check for **+ 12 V** on the downstream oxygen sensor. Repair if necessary.
Disconnect the battery. Disconnect the computer. Check the **cleanliness and condition** of the connections. Use the bornier to check the **insulation, continuity and the absence of interference resistance** on the following connections: **Computer track B2, connector C → Downstream oxygen sensor, track D** **Computer track A2, connector C → Downstream oxygen sensor, track C** Repair if necessary.
Check **the fitting** of the downstream oxygen sensor.
If the vehicle is driven frequently in town, **carry out the unclogging procedure** (oxygen sensors and catalytic converter clogging).
Check that the exhaust pipe is completely **leak free**.
Replace the downstream oxygen sensor.
If the fault is still present, the catalytic converter is certainly damaged. Carry out the checks on the following page.

AFTER REPAIR	Repeat the conformity check from the start.

GETtheMANUALS.org

PR099 **CONTINUED**	

If the catalytic converter is defective, determine the cause of the destruction, otherwise the new catalytic converter may be damaged in turn.

Remove the catalytic converter.

Various things may destroy a catalytic converter:
- **deformation** (impact),
- **thermal shock** (cold water splashed onto a hot catalytic converter can damage it),
- **defective injector or ignition:** the catalytic converter is damaged by contact with petrol (coil fault, coil control fault, injector jammed open),
- **injector leak,**
- **abnormal oil or coolant consumption** (defective cylinder head gasket),
- **use of a fuel additive** or other equivalent product (obtain information from the customer because this type of product can contaminate the catalytic converter and render it useless sooner or later).

Look up the service history of the vehicle or, if this is not possible, ask the customer if the vehicle has had injection or ignition faults.

If the cause of the catalytic converter damage has been found and the fault has disappeared, replace the catalytic converter.

AFTER REPAIR	Repeat the conformity check from the start.

GETtheMANUALS.org

PR421	MANIFOLD PRESSURE

NOTES	There must be no present or stored faults.

Check **the cleanliness and condition** of the manifold pressure sensor and its connections.
Clean or replace as necessary.

Disconnect the battery.
Disconnect the computer. Check the **cleanliness and condition** of the connections.
Use the bornier to check the **insulation, continuity and the absence of interference resistance** on the following connections:

Computer track H2, connector B → Pressure sensor, track 1
Computer track H3, connector B → Pressure sensor, track 3
Computer track H4, connector B → Pressure sensor, track 2

Repair if necessary.

If the fault is still present, replace the manifold pressure sensor.

If the fault is still present, carry out the following checks:

The inlet line must be perfectly sealed, from the throttle valve to the cylinder head.

Check:
– the condition of the air filter,
– that the air inlet system is not blocked,
– the sealing between the throttle valve and inlet manifold,
– the manifold pressure sensor sealing,
– the fuel vapour absorber bleed, which should not be jammed open,
– that there are no leaks in the fuel vapour absorber bleed circuit,
– the brake servo system sealing,
– the turbocharger safety valve circuit sealing,
– the cylinder head oil vapour recovery system sealing,
– the sealing between the inlet manifold and cylinder head,
– the exhaust pipe sealing between the cylinder head and catalytic converter.

AFTER REPAIR	Repeat the conformity check from the start.

GETtheMANUALS.org

PR427	AVERAGE PINKING SIGNAL

NOTES	There must be no present or stored faults.

The pinking sensor must not supply a zero signal, proving that it is recording the mechanical vibrations of the engine.
Check that the fuel in the fuel tank is of the correct type.
Check the condition and conformity of the spark plugs.
Check the pinking sensor **fitting**.
Check **the cleanliness and condition** of the pinking sensor and its connections. Clean or replace as necessary.
Disconnect the battery. Disconnect the computer. Check the **cleanliness and condition** of the connections. Use the bornier to check the **insulation, continuity and the absence of interference resistance** on the following connections: **Computer track A2, connector B → Pinking sensor, track 2** **Computer track B2, connector B → Pinking sensor, track 1** **Computer track C2, connector B → Pinking sensor screening** Repair if necessary.
If the fault is still present, replace the pinking sensor.

AFTER REPAIR	Repeat the conformity check from the start.

GETtheMANUALS.org

PR429	MEASURED THROTTLE POSITION

NOTES	**SAFETY ADVICE:** **Never drive the vehicle without having made sure that there are no throttle valve faults present.**
	There must be no present or stored faults.

Check that there are no **foreign bodies** in the throttle valve.
Check manually that the throttle has no hard point at any stage in its rotation.

Check the **cleanliness and condition** of the throttle potentiometer connections.
Clean or replace as necessary.

Disconnect the battery.
Disconnect the computer. Check the **cleanliness and condition** of the connections.
Use the bornier to check the **insulation, continuity and the absence of interference resistance** on the following connections:

- **Computer track G4, connector B** → **Throttle potentiometer, track 1**
- **Computer track D3, connector B** → **Throttle potentiometer, track 6**
- **Computer track G2, connector B** → **Throttle potentiometer, track 5**
- **Computer track G3, connector B** → **Throttle potentiometer, track 2**

Repair if necessary.

Check that the **resistances of tracks 1 and 2 of the throttle potentiometer** follow their curves correctly, by moving the throttle from no load to full load (check the values in the **Help** section).
Replace the throttle valve if necessary.

AFTER REPAIR	**If the throttle valve has been replaced, reinitialise the programming (RZ019 Reinitialising programming).** Repeat the conformity check from the start.

GETtheMANUALS.org

Tool commands	Diagnostic tool title
SC034	Upstream O_2 sensor check
RZ007	Fault memory
RZ019	Reinitialise programming
AC015	Fuel pump relay
AC016	Air pump relay
AC017	Canister bleed solenoid valve
AC027	Motorised throttle
AC038	Low speed fan unit relay
AC039	High speed fan unit relay
AC063	Thermoplunger no. 1 relay
AC070	Climate control compressor
AC088	Injector control locking
AC089	Injector control unlocking
AC125	Camshaft dephaser 1
AC149	Thermoplunger no. 1 relay
AC151	Turbocharging valve
AC195	Electric coolant pump
AC196	Oil vapour anti-icing resistor
AC198	Vacuum pump relay
VP007	Decrease idling speed
VP011	Increase idling speed
VP020	Write VIN

GETtheMANUALS.org

AC015	FUEL PUMP RELAY

NOTES	There must be no present or stored faults.

IF THE RELAY DOES NOT CLICK	Check **the supply fuse** of the fuel pump relay. Replace the fuse if necessary.
	Check **the cleanliness and condition** of the fuel pump relay connector. Replace the connector if necessary.
	Disconnect the relay. With the ignition on, check for **+ 12 V on track 1** of the fuel pump relay, connector end. Repair if necessary.
	Check **the resistance** of the fuel pump relay on **tracks 1 and 2** (see the value in the **Help** section). Replace the fuel pump relay if necessary.
	Disconnect the battery. Disconnect the computer. Check the **cleanliness and condition** of the connections. Use the universal bornier to check the **insulation, continuity and the absence of interference resistance** on the following connection: **Computer track D1, connector C ⟶ Fuel pump relay, track 2** Repair if necessary.
	If the fault persists, replace the relay.
IF THE PUMP DOES NOT OPERATE	Disconnect the fuel pump. Check the **cleanliness and condition** of the connections. With the ignition on, check for **+ 12 V** on the connector. Check for **earth** on the connector. Repair if necessary.
	If the fault is still present, replace the fuel pump.

AFTER REPAIR	Repeat the conformity check from the start.

GETtheMANUALS.org

AC017	CANISTER BLEED SOLENOID VALVE

NOTES	There must be no present or stored faults.

Check **the cleanliness and condition** of the fuel vapour absorber bleed solenoid valve connector. Replace the connector if necessary.
With the ignition on, check for **+ 12 V on the fuel vapour absorber bleed solenoid valve**. Repair if necessary.
Check the **resistance of the fuel vapour absorber bleed solenoid valve** (see value in the **Help** section). Replace the solenoid valve, if necessary.
Disconnect the battery. Disconnect the computer. Check the **cleanliness and condition** of the connections. Use the bornier to check the **insulation, continuity and the absence of interference resistance** on the following connection: **Computer track E1, connector C** ⟶ **Fuel vapour absorber bleed solenoid valve, track 2** Repair if necessary.
If the fault is still present, replace the solenoid valve.

AFTER REPAIR	Repeat the conformity check from the start.

GETtheMANUALS.org

AC027	MOTORISED THROTTLE

NOTES	**SAFETY ADVICE: never drive the vehicle without ensuring that there are no throttle valve faults.**
	There must be no present or stored faults.

Check **the cleanliness** of the throttle valve and that the throttle **rotates correctly**.
Clean or replace as necessary.

Check the **cleanliness and condition** of the connections.
Clean or replace as necessary.

Disconnect the battery.
Disconnect the computer. Check the **cleanliness and condition** of the connections.
Use the bornier to check the **insulation, continuity and the absence of interference resistance** on the following connections:

Computer track M3, connector B → Motorised throttle, track 4
Computer track M4, connector B → Motorised throttle, track 3
Computer track G4, connector B → Motorised throttle, track 1

Repair if necessary.

Check **the electrical resistance** of the throttle motor (see the value in the **Help** section).
Replace the throttle valve if necessary.

If the fault is still present, replace the throttle valve.

AFTER REPAIR	**If the throttle valve has been replaced, reinitialise the programming (RZ019 Reinitialising programming).** Repeat the conformity check from the start.

GETtheMANUALS.org

AC038	LOW-SPEED FAN ASSEMBLY RELAY

NOTES	There must be no present or stored faults.

Check the **cleanliness and condition** of the fan assembly. Check that the fan blade has not seized.
Check the **cleanliness and condition** of the low-speed fan relay connector. Replace the connector if necessary.
Disconnect the low-speed fan relay. With the ignition on, check for **+ 12 V on track 1** of the relay. Repair if necessary.
Check **the resistance of the low-speed fan relay** across **tracks 1 and 2** (see the value in the **Help** section). Replace the low-speed fan relay if necessary.
Disconnect the battery. Disconnect the computer. Check the **cleanliness and condition** of the connections. Use the bornier to check the **insulation, continuity and the absence of interference resistance** on the following connection: Computer connector **C track F1** ⟶ **Low-speed fan assembly relay, track 2** Repair if necessary.
Check **the insulation, the continuity and the absence of interference resistance** of the connection between **track 5** of the relay and the fan assembly. Repair if necessary.
Check **the insulation, continuity and absence of interference resistance** on the fan unit's earth connection. Repair if necessary.
If that still does not work, replace the relay or the fan assembly.

AFTER REPAIR	Repeat the conformity check from the start.

GETtheMANUALS.org

AC039	HIGH-SPEED FAN ASSEMBLY RELAY

NOTES	There must be no present or stored faults.

Check the **cleanliness and condition** of the fan assembly. Check that the fan blade has not seized.
Check **the cleanliness and condition** of the high-speed fan relay connector. Replace the connector if necessary.
Disconnect the high-speed fan relay. With the ignition on, check for **+ 12 V on track 1** of the relay. Repair if necessary.
Check **the resistance of the high-speed fan relay** across **tracks 1 and 2** (see the value in the **Help** section). Replace the high-speed fan relay if necessary.
Disconnect the battery. Disconnect the computer. Check the **cleanliness and condition** of the connections. Use the bornier to check the **insulation, continuity and the absence of interference resistance** on the following connection: **Computer track F2, connector C** ⟶ **High-speed fan assembly relay, track 2** Repair if necessary.
Check **the insulation, the continuity and the absence of interference resistance** of the connection between **track 5** of the relay and the fan assembly. Repair if necessary.
Check **the insulation, continuity and absence of interference resistance** on the fan unit's earth connection. Repair if necessary.
If that still does not work, replace the relay or the fan assembly.

AFTER REPAIR	Repeat the conformity check from the start.

GETtheMANUALS.org

AC063	THERMOPLUNGER RELAY NO. 1

NOTES	There must be no present or stored faults.

Check **the cleanliness and condition** of thermoplunger relay 1 and its connections. Clean or replace as necessary.
Check **the resistance of thermoplunger** relay 1 (see the value in the **Help** section). Replace the relay if necessary.
With the ignition on, check for **+ 12 V on track 1** of thermoplunger relay 1. Repair the wiring up to the fuse if necessary.
Disconnect the battery. Disconnect the computer. Check the **cleanliness and condition** of the connections. Use the bornier to check the **insulation, continuity and the absence of interference resistance** on the following connection: **Injection computer track D2, connector C** ⟶ **Thermoplunger no. 1 relay, track 65** Repair if necessary.
If the fault persists, replace the relay.

AFTER REPAIR	Repeat the conformity check from the start.

GETtheMANUALS.org

AC070	CLIMATE CONTROL COMPRESSOR

NOTES	There must be no present or stored faults.

Check **the cleanliness and condition** of the compressor connections.
Check that the wire connection to the compressor **is not broken** anywhere.
Repair if necessary.

Disconnect the battery.
Disconnect the computer. Check the **cleanliness and condition** of the connections.
Use the bornier to check the **insulation, continuity and the absence of interference resistance** on the following connection:

Computer track F3, connector C ⟶ **Connection unit track 20, ECH 26-track connector**

Repair if necessary.

If the command still does not operate, run a fault finding procedure on the **Air conditioning** system.
(see **62A, Air conditioning, 62B, Climate control or 62C, Non regulated climate control**).

AFTER REPAIR	Repeat the conformity check from the start.

GETtheMANUALS.org

AC149	THERMOPLUNGER RELAY NO. 2

NOTES	There must be no present or stored faults.

Check **the cleanliness and condition** of thermoplunger relay 2 and its connections. Clean or replace as necessary.
Check **the resistance of thermoplunger** 2 relay (see the value in the **Help** section). Replace the relay if necessary.
Check for **+ 12 V after ignition on track 1** of thermoplunger relay 2. Repair the wiring up to the fuse if necessary.
Disconnect the battery. Disconnect the computer. Check the **cleanliness and condition** of the connections. Use the bornier to check the **insulation, continuity and the absence of interference resistance** on the following connection: **Injection computer track J4, connector B** ⟶ **Thermoplunger no. 2 relay, track 3** Repair if necessary.
If the fault persists, replace the relay.

AFTER REPAIR	Repeat the conformity check from the start.

GETtheMANUALS.org

AC151	TURBOCHARGING VALVE

NOTES	There must be no present or stored faults.

Check **the cleanliness and condition** of the solenoid valve and its connections. Clean or replace as necessary.
With the ignition on, check for **+ 12 V** on the solenoid valve. Repair if necessary.
Disconnect the battery. Disconnect the computer. Check the **cleanliness and condition** of the connections. Use the bornier to check the **insulation, continuity and the absence of interference resistance** on the following connections: **Computer track D4, connector C ⟶ Turbocharging solenoid valve, track 1** Repair if necessary.
Check the **resistance** of the turbocharging solenoid valve (see the value in the **Help** section). Replace the solenoid valve, if necessary.
If the fault persists, replace the solenoid valve.

AFTER REPAIR	Repeat the conformity check from the start.

GETtheMANUALS.org

AC195	ELECTRIC COOLANT PUMP

NOTES	There must be no present or stored faults.

IF THE RELAY DOES NOT CLICK	Check the **cleanliness and condition** of the coolant pump relay connections. Clean or replace as necessary.
	Check for **+ 12 V on track 5** of the coolant pump relay, connector end. Repair if necessary. Check, with the ignition on, for **+ 12 volts on track 1** of the coolant pump relay, connector end.
	Check **the resistance** of the coolant pump relay on **tracks 1 and 2.** (See the value in the **Help** section). Replace the fuel pump relay if necessary.
	Disconnect the battery. Disconnect the computer. Check the **cleanliness and condition** of the connections. Use the bornier to check the **insulation, continuity and the absence of interference resistance** on the following connection: **Computer track C2, connector C** → **Coolant pump relay, track 2** Repair if necessary.
	If the fault persists, replace the relay.

IF THE PUMP DOES NOT OPERATE	Disconnect the coolant pump. Check the **cleanliness and condition** of the connections. Clean or replace as necessary.
	Disconnect the battery. Check the **insulation, continuity and absence of interference resistance** on the following connection: **Coolant pump relay connector, track 3** → **Coolant pump connector, track 2** Repair if necessary.
	Check for **earth** on the connector. Repair if necessary.
	If the fault persists, replace the coolant pump.

AFTER REPAIR	Repeat the conformity check from the start.

JSAA5041.0

GETtheMANUALS.org

AC196	OIL VAPOUR ANTI-ICING RESISTOR

NOTES	There must be no present or stored faults.

IF THE RELAY DOES NOT CLICK	Check the **cleanliness and condition** of the anti-icing resistor relay connections. Clean or replace as necessary.
	Check the **electrical resistance** of the anti-icing resistor relay (see the value in the **Help** section). Replace the relay if necessary.
	With the ignition on, check for **+ 12 V on track 1** of the anti-icing resistor relay. Repair if necessary.
	Disconnect the battery. Disconnect the computer. Check the **cleanliness and condition** of the connections. Use the bornier to check the **insulation, continuity and the absence of interference resistance** on the following connection: **Injection computer track B3, connector A ⟶ Anti-icing resistance relay, track 2** Repair if necessary.
	If the relay still does not click when activated, replace the relay.
IF THERE IS NO + 12 V OR EARTH AT THE CONNECTOR	Check **the insulation, continuity and absence of interference resistance** of the connection between **track 5** of the relay and track 2 of the anti-icing resistor. Repair if necessary.
	Check **insulation, continuity and absence of interference resistance** on the anti-icing resistor earth connection. Repair if necessary.
	If that still does not work, replace the anti-icing resistor.

AFTER REPAIR	Repeat the conformity check from the start.

JSAA5041.0

GETtheMANUALS.org

ELECTRICAL RESISTANCE OF COMPONENTS

Temperature ~ 20°C:

Injectors	**14.5 Ω ± 0.7 Ω**
Actuator relay	**65 Ω ± 6.5 Ω**
Throttle motor	**1.6 Ω ± 0.2 Ω**
Fuel vapour absorber bleed solenoid valve	**25 Ω ± 5 Ω**
WASTEGATE solenoid valve	**30 Ω ± 1.5 Ω**
NIPPODENSO ignition coils	**Primary: 0.5 Ω ± 0.1 Ω** **Secondary: 6.8 kΩ ± 1 Ω**
SAGEM ignition coils	**Primary: 0.5 Ω ± 0.1 Ω** **Secondary: 10.7 kΩ ± 1.6 Ω**
Flywheel sensor	**230 Ω ± 1.6 Ω**
Upstream oxygen sensor heating	**9 Ω ± 1.8 Ω**
Downstream oxygen sensor heating	**9 Ω ± 1.8 Ω**
No. 1 thermoplunger relay	**65 Ω ± 6.5 Ω**
No. 2 thermoplunger relay	**65 Ω ± 6.5 Ω**
Thermoplungers	**1 Ω ± 0.05 Ω**
High-speed fan relay	**65 Ω ± 6.5 Ω**
Low-speed fan relay	**65 Ω ± 6.5 Ω**
Oil vapour anti-icing resistor relay	**65 Ω ± 6.5 Ω**
Oil vapour anti-icing resistor	**9.5 Ω ± 0.95 Ω**

GETtheMANUALS.org

Values for components with variable electrical resistance:

AIR TEMPERATURE SENSOR	
Temperature in °C	***Electrical resistance in Ω***
- 40	49930 ± 7489 Ω
- 10	9540 ± 954 Ω
25	2050 ± 123
50	810 ± 48.6
80	309 ± 18.5
110	135 ± 8.1
120	105 ± 6.3

COOLANT TEMPERATURE SENSOR	
Temperature in °C	***Electrical resistance in Ω***
- 40	75780 ± 7578
- 10	12460 ± 1246
25	2250 ± 112.5
50	810 ± 40.5
80	283 ± 14.1
110	115 ± 5.8
120	88 ± 4.4

HELLA accelerator pedal potentiometer (20 °C)		
No load gang 1	Tracks G2 and H2, computer connector A **1950 Ω ± 380 Ω**	Tracks H3 and H2, computer connector A **1130 Ω ± 226 Ω**
Full load gang 1	Tracks G2 and H2, computer connector A **1085 Ω ± 217 Ω**	Tracks H3 and H2, computer connector A **2000 Ω ± 400 Ω**
No load gang 2	Tracks F2 and F3, computer connector A **2770 kΩ ± 554 Ω**	Tracks F3 and F4, computer connector A **1030 Ω ± 206 Ω**
Full load gang 2	Tracks F2 and F3, computer connector A **2010 Ω ± 402 Ω**	Tracks F3 and F4, computer connector A **1790 Ω ± 358 Ω**

GETtheMANUALS.org

MGI throttle potentiometer (20°C)		
Throttle limp-home position, gang 1 **(Throttle position with engine stopped)**	Tracks D3 and G2, computer connector B **1205 Ω ± 241 Ω**	Tracks D3 and G4, computer connector B **1960 Ω ± 392 Ω**
Throttle fully open position, track 1 **(Keep throttle open manually)**	Tracks D3 and G2, computer connector B **2000 Ω ± 400 Ω**	Tracks D3 and G4, computer connector B **830 Ω ± 166 Ω**
Throttle limp-home position, gang 2 **(Throttle position with engine stopped)**	Tracks G4 and G3, computer connector B **1050 Ω ± 210 Ω**	Tracks G3 and G2, computer connector B **1820 Ω ± 364 Ω**
Throttle fully open position, gang 2 **(Keep throttle open manually)**	Tracks G4 and G3, computer connector B **1930 Ω ± 386 Ω**	Tracks G3 and G2, computer connector B **760 Ω ± 152 Ω**

GETtheMANUALS.org

NOTES	**Only check the customer complaint after performing a complete check with the diagnostic tool.**
	SAFETY ADVICE: **Never drive the vehicle without ensuring that there are no throttle valve faults.**

NO DIALOGUE WITH THE COMPUTER	→ **ALP 1**
THE ENGINE WILL NOT START	→ **ALP 2**
IDLING SPEED FAULTS	→ **ALP 3**
FAULTS WHILE DRIVING	→ **ALP 4**

AFTER REPAIR	Carry out a check using the diagnostic tool.

JSAA5041.0

GETtheMANUALS.org

ALP 1	No dialogue with the computer

NOTES	None

Test the diagnostic tool on another vehicle in perfect working order.
Check that the sensor's green warning light comes on.
If communication with the second vehicle is impossible, follow the instructions in the **CLIP diagnostic tool test** section.
If communication with the second vehicle is impossible, follow the instructions in the **Vehicle check** section.

DIAGNOSTIC TOOL CHECK	Check **the cleanliness** and **condition** of the diagnostic socket contacts on the vehicle. Check the condition of the cable from the diagnostic socket to the sensor, and the cleanliness and condition of the connections. Check the sensor connections. Check the condition of the cable from the CLIP diagnostic tool to the sensor as well as the condition and cleanliness of the connections. Check the cleanliness and condition of the CLIP socket. If the fault is still present, contact the Techline.
VEHICLE CHECK	Check the **electrical voltage** of the battery. Check the **condition and cleanliness** of the battery terminals. Check the **condition** of the battery earth cable and ensure that there is **good electrical connection** with the bodywork.
	Check **the cleanliness and good connection** of the injection computer earth to the bodywork.
	Check the after ignition supply **fuses FM3 10A and FM6 10A** of the injection computer and the condition and cleanliness of the contacts.

AFTER REPAIR	Carry out a check using the diagnostic tool.

GETtheMANUALS.org

ALP 1 CONTINUED	

VEHICLE CHECK

Use the Universal bornier to check the following tracks on the **vehicle diagnostic socket**:

Track 1	→	**+ After ignition**
Track 16	→	**+ Battery feed**
Tracks 4 and 5	→	**Earth**

Disconnect the battery and the injection computer.
Check the cleanliness and condition of the computer connections.
Use the universal bornier to check the continuity of the CAN communication lines:

Injection computer, track A4 connector A	→	**Vehicle diagnostic socket track 6**
Injection computer, track A3 connector A	→	**Vehicle diagnostic socket track 14**

Disconnect the computer **earth** terminal from the negative battery terminal.
Check **the continuity and insulation** of the following tracks:

Injection computer track H1 connector C	→	**Earth terminal**
Injection computer track M1 connector B	→	**Earth terminal**
Injection computer track G4 connector A	→	**Earth terminal**
Injection computer track H4 connector A	→	**Earth terminal**

Check **the continuity and insulation** of the following tracks:

Injection computer track G2 Connector C	→	**Track 13 of the injection locking relay**

Check for **+ after ignition feed on tracks 14 and 16 of the injection locking relay**.

AFTER REPAIR	Carry out a check using the diagnostic tool.

JSAA5041.0

GETtheMANUALS.org

ALP 2	The vehicle will not start

NOTES	
	Follow ALP 2 after a complete check with the diagnostic tool. *(Use the relevant section in the Repair Manual to carry out certain operations).*
	SAFETY ADVICE: **Never drive the vehicle without ensuring that there are no throttle valve faults.**

If the starter motor does not engage, there may be an engine immobiliser fault. Carry out a fault finding procedure on the UCH.
Check the condition of the battery. Check the cleanliness, condition and tightness of the battery terminals. Check that the battery is correctly earthed to the vehicle bodywork. Check that the battery + leads are correctly connected.
Check that the starter motor is properly connected. Check that the starter operates correctly.
Check the condition and conformity of the spark plugs. Check the mounting, cleanliness and condition of the flywheel signal sensor. Check the flywheel signal sensor air gap. Check the condition of the flywheel.
Check that the air filter is not clogged. Check that the air inlet system is not blocked.
Check that there is fuel in the tank (fuel sender fault). Check that the tank vent is not blocked. Check that the fuel is of the correct type. Check that there are no leaks in the fuel system, from the tank to the injectors. Check that no hoses are pinched (especially after a removal operation). Check the fuel flow rate and pressure. Check the operation of the injectors and that they do not leak.
Check that the exhaust system is not blocked and the catalytic converter not clogged.
Check the timing adjustment.
Check the engine compressions.
Check the hydraulic tappets if there is camshaft noise.

AFTER REPAIR	Carry out a check using the diagnostic tool.

GETtheMANUALS.org

ALP 3	Idle speed faults

NOTES	
	Work through ALP 3 after complete checking using the diagnostic tool. *(Use the relevant section in the Workshop Repair Manual as a guide in carrying out certain operations).*
	SAFETY ADVICE: **Never drive the vehicle without ensuring that there are no throttle valve faults.**

Check that the oil level is not too high.
Check the condition of the pencil coils and the cleanliness of their connections. Check the electrical resistance of the pencil coil secondary circuits. Check the condition and conformity of the spark plugs. Check the mounting, cleanliness and condition of the flywheel signal sensor. Check the flywheel signal sensor air gap. Check the condition and cleanliness of the flywheel.
Check that the air filter is not clogged. Check that the air inlet system is not blocked. Check that the throttle valve is not clogged.
Check inlet system sealing, from the throttle to the cylinder head. Check that the fuel vapour absorber bleed is not disconnected or jammed open. Check that there are no leaks in the fuel vapour absorber bleed circuit. Check that there are no leaks in the braking assistance system. Check that there are no leaks in the turbocharger safety valve system. Check that there are no leaks in the oil vapour recovery circuit (manifold/cylinder head). Check that there are no leaks around the manifold pressure sensor.
Check that the tank vent is not blocked. Check that the fuel is of the correct type. Check that there are no leaks in the fuel system, from the tank to the injectors. Check that no hoses are pinched (especially after a removal operation). Check the fuel flow rate and pressure. Check that the injectors are working properly.
Check that the exhaust system is not blocked and the catalytic converter not clogged.
Check the timing adjustment.
Check the engine compressions.
Check the hydraulic tappets if there is camshaft noise.

AFTER REPAIR	Carry out a check using the diagnostic tool.

GETtheMANUALS.org

ALP 4	Faults when driving

NOTES	
	Work through ALP 4 after complete checking using the diagnostic tool. *(Use the relevant section in the Workshop Repair Manual as a guide in carrying out certain operations).*
	SAFETY ADVICE: **Never drive the vehicle without ensuring that there are no throttle valve faults.**

Check that the oil level is not too high.
Check the condition of the pencil coils and the cleanliness of their connections. Check the electrical resistance of the pencil coil secondary circuits. Check the condition and conformity of the spark plugs. Check the mounting, cleanliness and condition of the flywheel signal sensor. Check the flywheel signal sensor air gap. Check the condition and cleanliness of the flywheel.
Check that the air filter is not clogged. Check that the air inlet system is not blocked. Check inlet system sealing, from the throttle to the cylinder head.
Check that the fuel vapour absorber bleed is not disconnected or jammed open. Check that there are no leaks in the fuel vapour absorber bleed circuit. Check that there are no leaks in the braking assistance system. Check that there are no leaks in the turbocharger safety valve system. Check that there are no leaks in the oil vapour recovery system (manifold/cylinder head). Check that there are no leaks around the manifold pressure sensor. Check that the throttle valve is not clogged.
Lack of power may be due to a fault in the turbocharging system. The turbocharging system must be perfectly sealed: Check there are no leaks from the exhaust manifold to the turbocharger. Check there are no leaks from the turbocharger to the heat exchanger. Check there are no leaks from the heat exchanger to the throttle valve. Check there are no leaks around the turbocharging pressure sensor and the air temperature sensor. Check absence of leaks in the wastegate capsule pressure circuit connected to the turbocharger system. Check that the air-air heat exchanger is not clogged (presence of oil). If there is oil in the heat exchanger, the turbocharger is certainly damaged. Check that the pressure capsule which controls the turbocharging valve is not leaking. Check that the turbocharger protection vacuum capsule is not leaking. Carry out all the recommended checks on the turbocharger.

AFTER REPAIR	Carry out a check using the diagnostic tool.

GETtheMANUALS.org

ALP 4 CONTINUED	

Check that the tank vent is not blocked. Check that the fuel is of the correct type. Check that there are no leaks in the fuel system, from the tank to the injectors. Check that no hoses are pinched (especially after a removal operation). Check the fuel flow rate and pressure. Check that the injectors are working properly.
Check that the exhaust system is not blocked and the catalytic converter not clogged.
Check the timing adjustment.
Check the engine compressions.
Check the hydraulic tappets if there is camshaft noise.

AFTER REPAIR	Carry out a check using the diagnostic tool.

GETtheMANUALS.org

VEL SATIS

1 Engine and peripherals

17B PETROL INJECTION

EWR 20 INJECTION
Program No.: 61
Vdiag No.: 04, 08, 0C, 10

Fault finding - Introduction	17B - 2
Fault finding - System operation	17B - 7
Fault finding - Allocation of computer tracks	17B - 9
Fault finding - Replacement of components	17B - 15
Fault finding - Fault summary table	17B - 17
Fault finding - Interpretation of faults	17B - 20
Fault finding - Conformity check	17B - 89
Fault finding - Status summary table	17B - 103
Fault finding - Interpretation of statuses	17B - 105
Fault finding - Parameter summary table	17B - 114
Fault finding - Command summary table	17B - 116
Fault finding - Interpretation of commands	17B - 117
Fault finding - Customer complaints	17B - 118
Fault finding - Fault finding charts	17B - 119

V8 **Edition Anglaise**

"The repair procedures given by the manufacturer in this document are based on the technical specifications current when it was prepared.

The procedures may be modified as a result of changes introduced by the manufacturer in the production of the various component units and accessories from which his vehicles are constructed."

All rights reserved by Renault s.a.s.

Copying or translating, in part or in full, of this document or use of the service part reference numbering system is forbidden without the prior written authority of Renault s.a.s.

© Renault s.a.s. 2008

GETtheMANUALS.org

1. SCOPE OF THIS DOCUMENT

This document presents the fault finding procedure applicable to all computers with the following specifications:

Vehicles: **Espace IV phase 1 / phase 2**
Velsatis phase 1 / phase 2

Engines concerned: **V4Y 701, 711 and 715**

Function concerned: **Petrol injection**

Name of computer: **EWR 20 injection**

Program No.: **61**

Vdiag No.: **04, 08, 0C, 10**

2. PREREQUISITES FOR FAULT FINDING

Documentation type

Fault finding procedures (this manual):
– Assisted fault finding (integrated into the diagnostic tool), Dialogys.

Wiring Diagrams:
– Visu-Schema (CD-ROM).

Type of diagnostic tools
– **CLIP + sensor**

Special tooling required

Special tooling required	
	Multimeter
Elé. 1681	Universal bornier

3. RECAP

Procedure

To save energy, the UCH of the vehicle interrupts the + after ignition feed after 3 minutes.

When performing fault finding on a computer, it is possible to force the + after ignition feed for 1 hour by applying the following procedure:
– Press the card unlocking button,
– insert the card in the reader,
– press the Start button (interrupting the timed + after ignition feed mode),
– press and hold the Start button for over 5 seconds until the engine immobiliser warning light starts to flash rapidly (4 Hz).

This forced + after ignition feed mode remains active for 1 hour.
– Pressing the Start button or removing the card from the reader cuts off the forced + after ignition feed but does not cut off the timed forced + after ignition feed mode. As long as one hour has not elapsed the + after ignition feed function restarts the forced + after ignition feed for the remaining time.

GETtheMANUALS.org

Faults

Faults are declared as either present or stored (depending on whether they appeared in a certain context and have disappeared since, or whether they remain present but have not been diagnosed within the current context).

The **present** or **stored** status of faults should be taken into consideration when the diagnostic tool is switched on after the + after ignition feed (without any system components being active).

For a **present fault**, apply the procedure described in the **Interpretation of faults** section.

For a **stored fault**, note the faults displayed and apply the instructions in the **Notes** section.

If the fault is **confirmed** when the instructions in the Notes section are applied, the fault is present. Deal with the fault

If the fault is **not confirmed**, check:
- the electrical lines which correspond to the fault,
- the connectors for these lines (for oxidation, bent pins, etc.),
- the resistance of the component detected as faulty,
- the condition of the wires (melted or split insulation, wear).

Conformity check

The aim of the conformity check is to check data that does not produce a fault on the diagnostic tool because the data is inconsistent. Therefore, this stage is used to:
- carry out fault finding on faults that do not have a fault display, and which may correspond to a customer complaint.
- check that the system is operating correctly and that there is no risk of a fault recurring after repairs.

This section gives the fault finding procedures for statuses and parameters and the conditions for checking them.

If a status is not behaving normally or a parameter is outside the permitted tolerance values, consult the corresponding fault finding page.

Customer complaints - Fault finding chart

If the test with the diagnostic tool is OK but the customer complaint is still present, the fault should be processed by **customer complaint**.

A synopsis of the general procedure to follow is provided on the following page in the form of a flow chart.

GETtheMANUALS.org

4. FAULT FINDING PROCEDURE

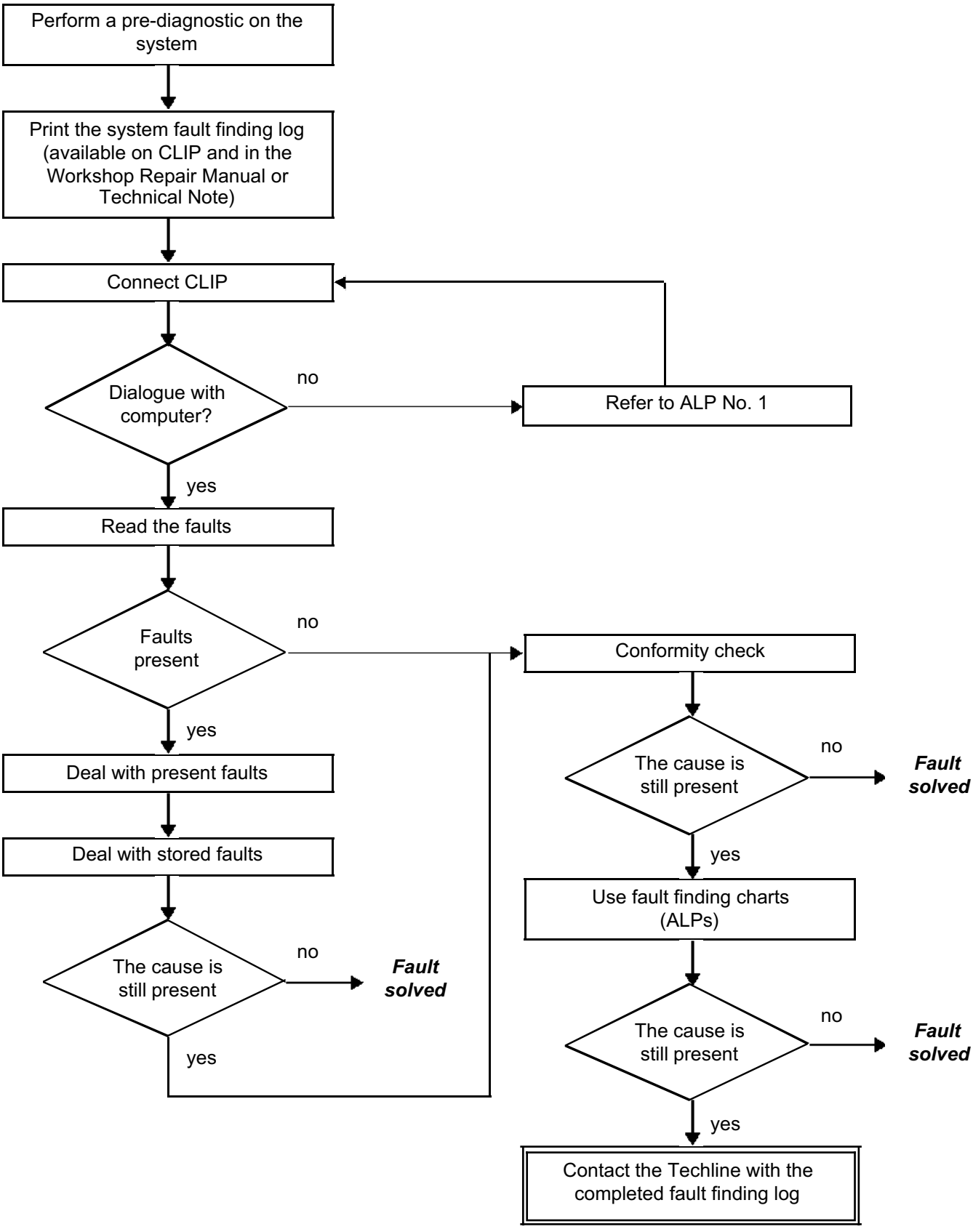

GETtheMANUALS.org

4. FAULT FINDING PROCEDURE (continued)

Wiring check

Fault finding problems
Disconnecting the connectors and/or manipulating the wiring harness may temporarily remove the cause of a fault.
Electrical measurements of voltage, resistance and insulation are generally correct, especially if the fault is not present when the analysis is made (stored fault).

Visual inspection
Look for damage under the bonnet and in the passenger compartment.
Carefully check the fuses, insulators and wiring harness routing.
Look for signs of oxidation.

Physical inspection
While manipulating the wiring harness, use the diagnostic tool to note any change in fault status from stored to present.
Make sure that the connectors are properly locked.
Apply light pressure to the connectors.
Twist the wiring harness.
If there is a change in status, try to locate the source of the fault.

Inspection of each component
Disconnect the connectors and check the appearance of the clips and tabs, as well as the crimping (no crimping on the insulating section).
Make sure that the clips and tabs are properly locked in the sockets.
Check that no clips or tabs have been dislodged during connection.
Check the clip contact pressure using an appropriate model of tab.

Resistance check
Check the continuity of entire lines, then section by section.
Look for a short circuit to earth, to **+ 12 V** or to another wire.

If a fault is detected, repair or replace the wiring harness.

GETtheMANUALS.org

5. FAULT FINDING LOG

IMPORTANT

IMPORTANT
Any fault on a complex system requires thorough fault finding with the appropriate tools. The FAULT FINDING LOG, which should be completed during the procedure, enables you to keep track of the procedure which is carried out. It is an essential document when consulting the manufacturer.

IT IS THEREFORE MANDATORY TO FILL OUT A FAULT FINDING LOG EACH TIME FAULT FINDING IS CARRIED OUT.

You will always be asked for this log:

- when requesting technical assistance from Techline,
- for approval requests when replacing parts for which approval is mandatory,
- to be attached to monitored parts for which reimbursement is requested. The log is needed for warranty reimbursement, and enables better analysis of the parts removed.

6. SAFETY ADVICE

Safety rules must be observed during any work on a component to prevent any damage or injury:

- check the battery voltage to avoid incorrect operation of computer functions,
- use the proper tools.

GETtheMANUALS.org

V4Y injection system details:

IMPORTANT
A computer is matched to the engine and the vehicle on which it is installed. It is prohibited to try a computer on another vehicle then return it to the original vehicle.

1. Motorised throttle valve

1.1 General

In the motorised throttle valve system there are no adjustments between the acquisition of the real value with the potentiometers, and the mechanical position of the throttle valve. An adjustment must therefore be made in the injection computer.
During this operation, the position of the lower mechanical stop and the **stand-by throttle position are programmed**, and the potentiometer amplifier is balanced.
The programmed values are stored in the computer memory. The sequence of **programming the end stops** and **storing programmed values** equates to **initialising** the motorised throttle valve. The springs of the motorised throttle are also tested.
The above initialisation process runs automatically and independently when the ignition is switched on, but only under certain initial conditions. It may also run several times when the ignition is on.

1.2 Throttle programming procedure

Programming should be performed at least once correctly during the vehicle life cycle, that is, when switching on for the first time (original initialisation), and then **each time either the computer or the motorised throttle valve is replaced**. After the throttle valve is replaced and before reprogramming, the **programming must be cleared**.
Switch on the ignition for approximately **30 seconds**, then switch off and wait for the end of power-latch.
Switch the ignition on again, start the engine and check that the engine responds correctly to movements of the accelerator pedal.

2. Warning light management

Management of the operation of warning lights and injection information is incorporated in the instrument panel.
In the event of a fault, refer to section **83A, Instrument panel**.
– The OBD (On Board Diagnostic) warning light (orange engine icon) signals that the pollution threshold has been exceeded.

Each time the ignition is switched on, the OBD warning light comes on to permit a visual inspection. This light goes out **3 seconds** after starting the engine.
In normal operation, if the warning light is lit continuously, the injection system is exceeding the pollution threshold due to an OBD fault (misfiring, ageing of the oxygen sensors or a fault on the fuel supply) or an electrical fault leading to an OBD fault (injector, coil, etc.). Flashing of this warning light signifies a risk of catalytic converter damage.

GETtheMANUALS.org

3. Climate control computer - injection computer connection

The injection computer is connected to the CLIMATE CONTROL computer via the multiplex link:
When the **CLIMATE CONTROL** switch is turned on, the CLIMATE CONTROL computer requests compressor operation.
The injection computer authorises or inhibits the compressor clutch and if necessary imposes a fast idle speed which increases in increments of **50 rpm**.

Compressor operation programming

During certain operating phases, the injection computer disables the compressor:
– for 3 seconds after the engine has been started, if the throttle position is more than approximately 67˚ (acceleration at a value below 54˚), for 5 seconds if use is made of the power assisted steering at the same moment as the demand for climate control, if the coolant temperature is more than **115 ˚C** and if the engine speed is above **5400 rpm** (acceleration at an engine speed below **4900 rpm**).

GETtheMANUALS.org

Connector A (81 track)

Computer track	Description	Sensor - actuator track
A1	Throttle motor + control	Track 6 of the motorised throttle 6-track VE connector
A2	Not used	
A3	Throttle motor - control	Track 3 of the motorised throttle 6-track VE connector
A4	Earth	Earth
A5	+ throttle motor relay supply	Track 38 of the throttle motor safety relay 5-track NO connector
A6	Not used	
A7	Variable inlet solenoid valve control	Track 2 of the variable inlet solenoid valve 2-track NO connector
A8	Not used	
A9	+ after ignition feed	Engine fuse and relay box
A10	Not used	
A11	Signal + brake pedal switch (brake light signal switch open)	Track 3 of the brake light switch 4-track CY connector
A12	CAN H	Track 6 diagnostic socket
A13	CAN L	Track 14 diagnostic socket
A14	Line K fault finding signal	Track 7 diagnostic socket
A15	Coolant temperature sensor earth	Track 2 of the coolant temperature sensor 2-track GR connector
A16	Pinking sensor + signal	Track 1 of the pinking sensor 2-track GR connector
A17	Signal + flow temperature sensor	Track 5 of the air flowmeter 5-track GR connector
A18	Power assisted steering pressure sensor analogue signal	Track 2 of the analogue power assisted steering pressure sensor 3-track NO connector
A19	Motorised throttle potentiometer 2 signal	Track 2 of the motorised throttle valve 6-track VE connector
A20	Motorised throttle potentiometer 1 signal	Track 4 of the motorised throttle valve 6-track VE connector
A21	Not used	
A22	Atmospheric pressure sensor signal	Track B of the manifold pressure sensor 3-track GR connector

GETtheMANUALS.org

Computer track	Description	Sensor - actuator tracks
A23	Motorised throttle potentiometer sensor signal	Track 5 of the motorised throttle valve 6-track VE connector
A24	Supply (+ 5 V) for pedal potentiometer load 2	Track 5 of the accelerator potentiometer 6-track NO connector
A25	Not used	
A26	Not used	
A27	Not used	
A28	Not used	
A29	START/STOP speed limiter control	Track B1 CY connector START/STOP cruise control/speed limiter control
A30	START/STOP cruise control control	Track A3 CY connector START/STOP cruise control/speed limiter control
A31	CAN H engine	Track 28 automatic transmission computer NO connector
A32	CAN L engine	Track 42 automatic transmission computer NO connector
A33	Not used	
A34	Not used	
A35	Pinking sensor - signal	Track 2 of the pinking sensor 2-track GR connector
A36	Coolant temperature sensor signal	Track 1 of the coolant temperature sensor 2-track GR connector
A37	Signal - pedal potentiometer load 1	Track 2 of the accelerator potentiometer 6-track NO connector
A38	Signal + pedal potentiometer load 1	Track 3 of the accelerator potentiometer 6-track NO connector
A39	Signal + potentiometer pedal load 2	Track 6 of the accelerator potentiometer 6-track NO connector
A40	Signal - potentiometer pedal load 2	Track 1 of the accelerator potentiometer 6-track NO connector
A41	Not used	
A42	Not used	

GETtheMANUALS.org

Computer track	Description	Actuator - sensor tracks
A43	Signal - unit 1 sensors	– track 2 of the flowmeter 5-track GR connector – track C of the manifold pressure sensor 3-track GR connector – track 3 of the analogue power assisted steering pressure sensor 3-track NO connector – track 1 of the motorised throttle valve 6-track VE connector – track 4 of the accelerator potentiometer 6-track NO connector
A44	Injection computer power supply relay control	Track S15 of the injection computer power supply relay
A45	Fan unit 2 (high speed) control	Track 7 of the fan unit relay
A46	Not used	
A47	Not used	
A48	Not used	
A49	Not used	
A50	Right-hand camshaft inlet sensor signal	Track 2 of the right-hand camshaft sensor 3-track VE connector
A51	Left-hand camshaft inlet sensor signal	Track 2 of the left-hand camshaft sensor 3-track VE connector
A52	Left-hand camshaft inlet sensor signal	Track 1 of the left-hand camshaft sensor 3-track VE connector
A53	Not used	
A54	Cruise control programming feedback signal	Track 1 of the cruise control switch 10-track NO connector
A55	Cruise control programming control	Track 2 of the cruise control switch 10-track NO connector
A56	Air flowmeter signal	Track 1 of the flowmeter 5-track GR connector
A57	Left-hand downstream oxygen sensor signal	Track 1 of the left-hand downstream oxygen sensor 4-track BE connector
A58	Right-hand downstream oxygen sensor signal	Track 1 of the right-hand downstream oxygen sensor 4-track BE connector
A59	Left-hand upstream oxygen sensor signal	Track 1 of the left-hand upstream oxygen sensor 4-track BE connector
A60	Right-hand upstream oxygen sensor signal	Track 1 of the right-hand upstream oxygen sensor 4-track BE connector

GETtheMANUALS.org

Computer track	Description	Sensor - actuator tracks
A61	Not used	
A62	– Signal - unit 1 sensors	– Track A of the manifold pressure sensor 3-track GR connector – Track 1 of the analogue power assisted steering pressure sensor 3-track NO connector
A63	Throttle motor safety relay control	Track 40 of the throttle motor safety relay 5-track NO connector
A64	Fan unit 1 (low speed) control	Track 11 of the low speed fan unit relay NO connector
A65	Not used	
A66	Not used	
A67	Not used	
A68	Not used	
A69	TDC sensor signal	Track 2 of the TDC sensor 3-track NO connector
A70	Not used	
A71	TDC sensor signal	Track 3 of the TDC sensor 3-track NO connector
A72	Not used	
A73	– right-hand camshaft inlet sensor	Track 1 of the right-hand camshaft inlet sensor 3-track VE connector
A74	Not used	
A75	Flow sensor signal	Track 3 of the flowmeter 5-track GR connector
A76	Left-hand downstream oxygen sensor signal	Track 4 of the left-hand downstream oxygen sensor 4-track VE connector
A77	Right-hand downstream oxygen sensor signal	Track 4 of the right-hand downstream oxygen sensor 4-track VE connector
A78	Left-hand upstream oxygen sensor signal	Track 4 of the left-hand upstream oxygen sensor 4-track VE connector
A79	Right-hand upstream oxygen sensor signal	Track 4 of the right-hand upstream oxygen sensor 4-track VE connector
A80	Not used	
A81	Not used	

GETtheMANUALS.org

Connector B (40 track)

Computer track	Description	Sensor - actuator tracks
B82	Not used	
B83	Not used	
B84	Ignition coil 5 control	Track 1 GR connector coil 5
B85	Ignition coil 6 control	Track 1 GR connector coil 6
B86	Not used	
B87	Not used	
B88	Not used	
B89	Canister bleed solenoid valve control	Track 2 of the fuel vapour absorber 2-track NO connector
B90	Not used	
B91	Not used	
B92	Ignition coil 1	Track 1 GR connector coil 1
B93	Ignition coil 2 control	Track 1 GR connector coil 2
B94	Ignition coil 3 control	Track 1 GR connector coil 3
B95	Ignition coil 4 control	Track 1 GR connector coil 4
B96	Fuel pump relay control	Track 5 of the fuel pump relay 5-track NO connector
B97	Not used	
B98	Injector 6 control	Track 2 of the 2-track GR connector, injector 6
B99	Injector 5 control	Track 2 of the 2-track GR connector, injector 5
B100	Injector 4 control	Track 2 of the 2-track GR connector, injector 4
B101	Downstream oxygen sensor heating control (left-hand)	Track 2 of the left-hand downstream oxygen sensor 4-track BE connector
B102	Downstream oxygen sensor heating control (right-hand)	Track 2 of the right-hand downstream oxygen sensor 4-track BE connector
B103	Left-hand variable camshaft dephaser control	Track 1 of the left-hand variable camshaft dephaser 2-track VE connector
B104	Right-hand variable camshaft dephaser control	Track 1 of the right-hand variable camshaft dephaser 2-track VE connector

GETtheMANUALS.org

Computer track	Description	Actuator - sensor tracks
B105	Not used	
B106	Injector 1 control	Track 2 of the 2-track GR connector, injector 1
B107	Injector 2 control	Track 2 of the 2-track GR connector, injector 2
B108	Injector 3 control	Track 2 of the 2-track GR connector, injector 3
B109	Upstream oxygen sensor heating control (left-hand)	Track 2 of the left-hand upstream oxygen sensor 4-track BE connector
B110	Upstream oxygen sensor heating control (right-hand)	Track 2 of the right-hand upstream oxygen sensor 4-track BE connector
B111	Not used	
B112	Not used	
B113	+ protected battery feed	Track 24 of the engine fuse and relay box
B114	Not used	
B115	Earth	
B116	Earth	
B117	+ battery after relay 1	
B118	Earth	
B119	+ battery after relay 2	
B120	+ injection after relay protection	
B121	Earth	

GETtheMANUALS.org

1. COMPUTER REPLACEMENT AND PROGRAMMING OR REPROGRAMMING OPERATIONS

The system can be reprogrammed via the diagnostic socket using the **RENAULT CLIP** diagnostic tool (see **Technical Note 3585A**)

While the computer is being reprogrammed the fan assemblies are triggered automatically.

IMPORTANT
- **Switch on the diagnostic tool (mains or cigarette lighter feed).**
- **Connect a battery charger.**
- **Switch off all electrical consumers (lights, interior lighting, air conditioning, radio, etc.).**
- **Wait for the engine to cool (engine coolant temperature below 60 ˚C and air temperature below 50 ˚C).**

After any computer reprogramming operation:
- **Switch the ignition off and then on again.**
- **Use the diagnostic tool to carry out the following steps:**
- **Run** command **VP020 Enter VIN**.
- Following programming or reprogramming, faults may appear in the injection computer; run command **RZ007 Fault memory** to clear these faults.
- Program the throttle stops. (see **Configurations and programming: 1.**)
- Program the air path. (see **Configurations and programming: 2.**)
- **IMPORTANT: NEVER** run command **RZ019 Reinitialise programming**.This would erase the engine parameter programming.
- Carry out a road test followed by a complete test with the diagnostic tool.

IMPORTANT
Never drive the vehicle without having programmed the throttle stops.
It is forbidden to perform tests with computers borrowed from the Parts Department or from another vehicle which must then be returned.
These computers are hard-coded.
If the injection computer is defective, contact Techline and refer to the "fault finding log".

2. REPLACING THE MOTORISED THROTTLE VALVE

When replacing the throttle valve, program the throttle stops and the air path. (see **Configurations and programming: 2**)

3. REPLACING THE FLOWMETER

When replacing the flowmeter, program the air path. (see **Configurations and programming: 2.**)

4. REPLACING OR DISCONNECTING THE BATTERY

When replacing or disconnecting the battery, program the air path. (see **Configurations and programming: 2**.)

GETtheMANUALS.org

CONFIGURATIONS AND PROGRAMMING

1. Programming the throttle stops.

After replacing the computer or the motorised throttle valve, switch on the ignition, wait **30 seconds** so that the computer can program the upper and lower stops, then switch off the ignition and wait **30 seconds** for the computer to store the programmed stops. Check the programming with **ET051 Programming throttle stops: Performed**.

2. Programming the air path.

Use procedure 1 or 2 to program the air path.

Preliminary conditions: (procedures 1 and 2)

1 No present or stored faults in the injection computer (otherwise deal with the present faults or clear the stored faults by running command **RZ007 Fault memory**.)
2 The battery voltage should be above **13V** (battery charger required for the manual procedure, as the engine is off)
3 The coolant temperature should be between **70 and 97 ˚C**
4 The gear lever should be in neutral or Park position
5 All electrical consumers should be off (air conditioning unit, heating devices, headlights, de-icing)
6 The cooling fan should not be running.
7 The steering wheel should be in the centre position **(close to 0˚)**
8 The vehicle speed is zero (stationary).

Procedure 1 (with routine):

1 Clear **RZ032 Program air path**
2 With the engine running, run command **VP070 Program air path**
3 Wait for the command to finish.
4 Check status **ET802 Air path programming**
If **ET802 Air path programming** is **Completed**:
– Check that the idle speed is between **600-700 rpm**.
– If **ET802 Air path programming** is **NOT Completed**:
– Check that the throttle valve is completely closed with the ignition off,
– Check the cleanliness and conformity of the air inlet circuit,
– Restart from step **1)** or carry out **procedure 2**.

Procedure 2 (Manual): (to be used if Procedure 1 does not work)

1 Clear **RZ032 Program air path**
2 Switch off the ignition and wait **10 seconds** (for powerlatch).
3 Switch on the ignition, leaving the accelerator pedal **released** for at least **2 seconds**.
4 **Depress the accelerator pedal 5 times at "full load"** in less than **6 seconds**
5 Release the accelerator pedal **completely** for at least **5 seconds**.
6 **Depress the accelerator pedal once at "full load"** for **20 seconds**.
7 Release the accelerator pedal **completely** and start the engine within **10 seconds**.
8 Allow the engine to run for **20 seconds**.
9 Check status **ET802 Air path programming**
If **ET802 Air path programming** is **Completed**:
– Check that the idle speed is between **600-700 rpm**.
If **ET802 Air path programming** is **NOT Completed**:
– Check that the throttle valve is completely closed with the ignition off,
– Check the cleanliness and conformity of the air inlet circuit,
– Restart from step **1)** or contact the **Techline**

GETtheMANUALS.org

Tool fault	Associated DTC	Diagnostic tool title
DF001	**1001**	Coolant temperature sensor circuit
DF002	**1002**	Air temperature sensor circuit
DF008	**100A**	Pedal potentiometer circuit gang 1
DF009	**100B**	Pedal potentiometer circuit gang 2
DF023	**101E**	Coolant overheating warning light circuit
DF038	**1074**	Computer
DF056	**1006**	Air flow sensor circuit
DF059	**105E**	Misfiring on cylinder 1
DF060	**105F**	Misfiring on cylinder 2
DF061	**1060**	Misfiring on cylinder 3
DF062	**1062**	Misfiring on cylinder 4
DF063	**1062**	Misfires in cylinder 5
DF064	**1063**	Misfires in cylinder 6
DF085	**105D**	Fuel pump relay control circuit
DF090	**1011**	Vehicle speed sensor circuit
DF106	**1079**	CC/SL selector switch on steering wheel
DF116	**1070**	Multiplex network
DF151	**1013**	Main relay circuit
DF154	**1007**	Flywheel signal sensor circuit
DF200	**1003**	Atmospheric pressure sensor
DF301	**1042**	Air inlet circuit
DF328	**1041**	Throttle potentiometer circuit
DF330	**1012**	Pinking sensor circuit
DF333	**1082**	Injection → automatic transmission connection
DF345	**104B**	Ignition coil circuit
DF374	**103F**	Computer
DF379	**102E**	Cylinder 1 injector control
DF380	**102F**	Cylinder 2 injector control
DF381	**1030**	Cylinder 3 injector control

GETtheMANUALS.org

Tool fault	Associated DTC	Diagnostic tool title
DF382	**1031**	Cylinder 4 injector control
DF411	**1028**	Brake pedal sensor circuit
DF413	**1090**	Motorised throttle
DF425	**100F**	First sensor reference voltage
DF429	**102C**	Cruise control function
DF431	**1032**	Cylinder 5 injector control
DF432	**1033**	Cylinder 6 injector control
DF436	**103B**	Detection of engine misfiring
DF439	**1049**	Idle speed regulation
DF448	**1044**	Upstream oxygen sensor no. 1
DF449	**1045**	Upstream oxygen sensor no. 2
DF450	**1046**	Downstream oxygen sensor no. 1
DF451	**1047**	Downstream oxygen sensor no. 2
DF466	**1054**	Upstream oxygen sensor no. 1 heating
DF467	**1055**	Upstream oxygen sensor no. 2 heating
DF468	**1056**	Downstream oxygen sensor no. 1 heating
DF469	**1057**	Downstream oxygen sensor no. 2 heating
DF470	**105A**	Bank A fuel supply
DF471	**108C**	Bank B fuel supply
DF479	**107D**	Throttle valve servo
DF487	**107E**	Throttle stop programming
DF491	**107B**	Electronic stability program (ESP)
DF502	**107A**	Cruise control or speed limiter button
DF508	**106C**	Motorised throttle valve control
DF536	**1053**	Canister solenoid valve control circuit
DF567	**1075**	Computer
DF579	**1051**	Power-assisted steering pressure sensor circuit

GETtheMANUALS.org

Tool fault	Associated DTC	Diagnostic tool title
DF588	**1065**	Camshaft no. 1 dephaser control
DF589	**1068**	Camshaft no. 2 dephaser control
DF592	**1008**	Camshaft no. 1 sensor circuit
DF593	**1008**	Camshaft no. 2 sensor circuit
DF594	**1048**	Bank 1 richness regulation
DF595	**1092**	Bank 2 richness regulation
DF596	**1091**	Detection of overheating
DF610	**1077**	Fault on one of the 2 cruise control/speed limiter brake contacts
DF611	**1078**	Fault on the 2 cruise control/speed limiter brake contacts
DF648	**102A**	Computer
DF989	**105C**	Catalytic pre-converter no. 1
DF990	**1073**	Catalytic pre-converter no. 2

GETtheMANUALS.org

DF001 PRESENT OR STORED	COOLANT TEMPERATURE SENSOR CIRCUIT CC.O : Short circuit to earth CO.0 : Open circuit or short circuit to earth CO.1 : Open circuit or short circuit to +12 V 1.DEF : Inconsistent signal

NOTES	**Conditions for applying the fault finding procedure to stored faults:** The fault is declared present following a variation in coolant temperature (Fan unit triggered).

Check the **connection and condition of the coolant temperature sensor connector**.
Replace the connector if necessary.

Check the **resistance of the coolant temperature sensor** (value zero or infinity = total breakdown of the sensor).
Replace the coolant temperature sensor if the resistance is not:

2480 Ω ± 248 Ω at 20˚C
1750 Ω ± 175 Ω at 30˚C

Check **the insulation, continuity and absence of interference resistance** on the following connections:

Injection computer, connector A, track 36 → **Track 1 of the coolant temperature sensor**

Injection computer, connector A, track 15 → **Track 2 of the coolant temperature sensor**

Repair if necessary.

AFTER REPAIR	Follow the instructions to confirm repair. Deal with any other faults. Clear the stored faults. Switch off the ignition and wait for an end of dialogue to confirm the clearance.

GETtheMANUALS.org

DF002 PRESENT OR STORED	AIR TEMPERATURE SENSOR CIRCUIT CC.1 : Short circuit to + 12 V CO.0 : Open circuit or short circuit to earth CO.1 : Open circuit or short circuit to +12 V 1.DEF: Inconsistent signal

NOTES	**Conditions for applying the fault finding procedure to stored faults:** The fault is declared present following a variation in air temperature (Fan unit triggered).

Check the **condition and connection of the connector**.
Replace the connector if necessary.

Check the **resistance of the air temperature sensor**.
Replace the air temperature sensor if the resistance is not:

2420 Ω ± 242 Ω at 20˚C.
1050 Ω ± 105 Ω at 40˚C.
600 Ω ± 60 Ω at 60˚C.
400 Ω ± 40 Ω at 80˚C.

After replacing the throttle valve, program the air line. (See Replacement of components, Configurations and programming)

Check **the insulation, continuity and absence of interference resistance** on the following connections:

Injection computer, connector A, track 17 → **Track 5 of the flowmeter**

Injection computer, connector A, track 75 → **track 3 of the flowmeter**

Repair if necessary.

AFTER REPAIR	Follow the instructions to confirm repair. Deal with any other faults. Clear the stored faults. Switch off the ignition and wait for an end of dialogue to confirm the clearance.

GETtheMANUALS.org

DF008 PRESENT OR STORED	PEDAL POTENTIOMETER CIRCUIT GANG 1 CO.0 : Open circuit or short circuit to earth 1.DEF: Inconsistency of the signal

NOTES	**Priority for dealing with a combination of faults:** Deal first with faults **DF425 First sensor reference voltage or DF009 Pedal potentiometer circuit gang 2** if they are present or stored.

Check the **condition and connection of the connector**.
Replace the connector if necessary.

Check the **resistance of accelerator pedal position potentiometer 1**.
Replace the potentiometer if the resistance is not 1.2 kΩ ± 0.5 kΩ between tracks 2 and 4 of the pedal potentiometer.

Check **the insulation, continuity and absence of interference resistance** on the following connections:

- **Injection computer, connector A, track 37** → **track 2 of the accelerator pedal position potentiometer 1**
- **Injection computer, connector A, track 38** → **track 3 of the accelerator pedal position potentiometer 1**
- **Injection computer, connector A, track 43** → **track 4 of the accelerator pedal position potentiometer 1**

Repair if necessary.

AFTER REPAIR	Follow the instructions to confirm repair. Deal with any other faults. Clear the stored faults. Switch off the ignition and wait for an end of dialogue to confirm the clearance.

GETtheMANUALS.org

DF009 PRESENT OR STORED	PEDAL POTENTIOMETER CIRCUIT GANG 2 CO.0 : Open circuit or short circuit to earth 1.DEF: Inconsistency of the signal

NOTES	**Priority for dealing with a combination of faults:** Deal with the **DF425 First sensor reference voltage fault** first if it is present or stored. If faults **DF333 Injection → Automatic transmission connection** and **DF491 Electronic Stability Program (ESP)** are also present, check the computer earth lines on **tracks 115 and 116** (see **ALP 1**). Repair them if necessary. Switch off the ignition and wait for an end of dialogue to confirm the fault.

Check the **condition and connection of the connector**.
Replace the connector if necessary.

Check the **resistance of accelerator pedal position potentiometer 2**.
Replace the potentiometer if the resistance is not **1.7 kΩ ± 0.7 kΩ** between **tracks 1 and 5** of the pedal potentiometer.

Check **the insulation, continuity and absence of interference resistance** on the following connections:

Injection computer, connector A, track 24	→	**Track 5 of the accelerator pedal position potentiometer 2**
Injection computer, connector A, track 39	→	**Track 6 of the accelerator pedal position potentiometer 2**
Injection computer, connector A, track 40	→	**Track 1 of the accelerator pedal position potentiometer 2**

Repair if necessary.

AFTER REPAIR	Follow the instructions to confirm repair. Deal with any other faults. Clear the stored faults. Switch off the ignition and wait for an end of dialogue to confirm the clearance.

GETtheMANUALS.org

DF023 PRESENT OR STORED	COOLANT TEMPERATURE OVERHEATING WARNING LIGHT CIRCUIT

NOTES	None.

Run a multiplex network test (see **88B, Multiplex**).
Carry out fault finding on the Instrument panel system (see **83A, Instrument panel**).

AFTER REPAIR	Follow the instructions to confirm repair. Deal with any other faults. Clear the stored faults. Switch off the ignition and wait for an end of dialogue to confirm the clearance.

GETtheMANUALS.org

DF038 PRESENT OR STORED	COMPUTER 1.DEF: Internal command module: RAM (Random Access Memory) error

NOTES	Using parameter **PR071 Computer supply voltage**, check that the battery voltage is not below 11 V. Switch off the ignition and wait for dialogue between the computer and the diagnostic tool to end, then switch on the ignition again to confirm the fault.

Use the following procedure:
– Switch on the ignition.
– Clear the stored fault on the injection computer using the diagnostic tool.
– Switch off the ignition and wait for dialogue between the computer and the diagnostic tool to end.
– Switch on the ignition and establish dialogue with the injection computer.
If the computer fault is still present, contact the Techline.

AFTER REPAIR	Follow the instructions to confirm repair. Deal with any other faults. Clear the stored faults. Switch off the ignition and wait for an end of dialogue to confirm the clearance.

GETtheMANUALS.org

DF056 PRESENT OR STORED	AIR FLOWMETER CIRCUIT CO.0 : Open circuit or short circuit to earth CO.1 : Short circuit or open circuit to + 12 V 1.DEF: Inconsistency of the signal

NOTES	Using parameter **PR071 Computer supply voltage**, check that the battery voltage is not below 11 V. Switch off the ignition and wait for dialogue between the computer and the diagnostic tool to end, then switch on the ignition again to confirm the fault.

Check **the connection and condition** of the air flow sensor connector. Replace the connector if necessary.

Check that the sensor is **pneumatically connected**. Repair if necessary.

Check that the **inlet circuit has no leaks**.
Repair if necessary.

Check the **flowmeter resistance between track 1 and track 3**.
Replace the flowmeter if the resistance is not **2420 Ω ± 242 Ω**.

After the flowmeter has been replaced, program the air line. (See Replacement of components, Configurations and programming)

Check **the insulation, continuity and absence of interference resistance** on the following connections:

Injection computer, connector A, track 43 → **Track 2 of the flowmeter**

Injection computer, connector A, track 56 → **Track 1 of the flowmeter**

Injection computer, connector A, track 75 → **Track 3 of the flowmeter**

Main relay track 3 → **Track 4 of the flowmeter**

Repair if necessary.

AFTER REPAIR	Follow the instructions to confirm repair. Deal with any other faults. Clear the stored faults. Switch off the ignition and wait for an end of dialogue to confirm the clearance.

GETtheMANUALS.org

DF059 PRESENT OR STORED	COMBUSTION MISFIRES ON CYLINDER 1

NOTES	**Special note:** Indicates that the fault is confined to this cylinder. Priority for dealing with a combination of faults: – If the following faults: **DF059 Misfiring on cylinder 1;** **DF060 Misfiring on cylinder 2;** **DF061 Misfiring on cylinder 3;** **DF062 Misfiring on cylinder 4;** **DF063 Misfiring on cylinder 5;** **DF064 Misfiring on cylinder 6;** are all present, carry out procedure **DF436 Combustion misfire fault finding**. – If the fault is confined to this cylinder, deal with fault **DF436: Detection of misfires** first.

Check:
– condition and connection of the injector,
– condition of the pipe supplying fuel to the injector,
– condition and type of spark plug,
– the operation of the coil following fault procedure **DF345 Ignition coil circuit**,
– compression.
Repair if necessary.

AFTER REPAIR	Follow the instructions to confirm repair. Deal with any other faults. Clear the stored faults. Switch off the ignition and wait for an end of dialogue to confirm the clearance.

GETtheMANUALS.org

DF060 PRESENT OR STORED	COMBUSTION MISFIRING ON CYLINDER 2

NOTES	**Special note:** Indicates that the fault is confined to this cylinder. Priority for dealing with a combination of faults: – If the following faults: **DF059 Misfiring on cylinder 1;** **DF060 Misfiring on cylinder 2;** **DF061 Misfiring on cylinder 3;** **DF062 Misfiring on cylinder 4;** **DF063 Misfiring on cylinder 5;** **DF064 Misfiring on cylinder 6;** are all present, carry out procedure **DF436 Combustion misfire fault finding**. – If the fault is confined to this cylinder, deal with fault **DF436: Detection of misfires** first.

Check:
– condition and connection of the injector,
– condition of the pipe supplying fuel to the injector,
– condition and type of spark plug,
– the operation of the coil following fault procedure **DF345 Ignition coil circuit**,
– compression.
Repair if necessary.

AFTER REPAIR	Follow the instructions to confirm repair. Deal with any other faults. Clear the stored faults. Switch off the ignition and wait for an end of dialogue to confirm the clearance.

GETtheMANUALS.org

DF061 PRESENT OR STORED	COMBUSTION MISFIRING ON CYLINDER 3 CO.0 : Open circuit or short circuit to earth CO.1 : Short circuit or open circuit to + 12 V 1.DEF: Inconsistency of the signal

NOTES	**Special note:** Indicates that the fault is confined to this cylinder. Priority for dealing with a combination of faults: – If the following faults: **DF059 Misfiring on cylinder 1;** **DF060 Misfiring on cylinder 2;** **DF061 Misfiring on cylinder 3;** **DF062 Misfiring on cylinder 4;** **DF063 Misfiring on cylinder 5;** **DF064 Misfiring on cylinder 6;** are all present, carry out procedure **DF436 Combustion misfire fault finding**. – If the fault is confined to this cylinder, deal with fault **DF436: Detection of misfires** first.

Check:
– condition and connection of the injector,
– condition of the pipe supplying fuel to the injector,
– condition and type of spark plug,
– the operation of the coil following fault procedure **DF345 Ignition coil circuit**,
– compression.
Repair if necessary.

AFTER REPAIR	Follow the instructions to confirm repair. Deal with any other faults. Clear the stored faults. Switch off the ignition and wait for an end of dialogue to confirm the clearance.

GETtheMANUALS.org

DF062 PRESENT OR STORED	COMBUSTION MISFIRING ON CYLINDER 4

NOTES	**Special note:** Indicates that the fault is confined to this cylinder. Priority for dealing with a combination of faults: – If the following faults: **DF059 Misfiring on cylinder 1;** **DF060 Misfiring on cylinder 2;** **DF061 Misfiring on cylinder 3;** **DF062 Misfiring on cylinder 4;** **DF063 Misfiring on cylinder 5;** **DF064 Misfiring on cylinder 6;** are all present, carry out procedure **DF436 Combustion misfire fault finding**. – If the fault is confined to this cylinder, deal with fault **DF436: Detection of misfires** first.

Check:
– condition and connection of the injector,
– condition of the pipe supplying fuel to the injector,
– condition and type of spark plug,
– the operation of the coil following fault procedure **DF345 Ignition coil circuit**,
– compression.
Repair if necessary.

AFTER REPAIR	Follow the instructions to confirm repair. Deal with any other faults. Clear the stored faults. Switch off the ignition and wait for an end of dialogue to confirm the clearance.

GETtheMANUALS.org

DF063 PRESENT OR STORED	COMBUSTION MISFIRING ON CYLINDER 5

NOTES	**Special note:** Indicates that the fault is confined to this cylinder. Priority for dealing with a combination of faults: – If the following faults: **DF059 Misfiring on cylinder 1;** **DF060 Misfiring on cylinder 2;** **DF061 Misfiring on cylinder 3;** **DF062 Misfiring on cylinder 4;** **DF063 Misfiring on cylinder 5;** **DF064 Misfiring on cylinder 6;** are all present, carry out procedure **DF436 Combustion misfire fault finding**. – If the fault is confined to this cylinder, deal with fault **DF436: Detection of misfires** first.

Check:
– condition and connection of the injector,
– condition of the pipe supplying fuel to the injector,
– condition and type of spark plug,
– the operation of the coil following fault procedure **DF345 Ignition coil circuit**,
– compression.
Repair if necessary.

AFTER REPAIR	Follow the instructions to confirm repair. Deal with any other faults. Clear the stored faults. Switch off the ignition and wait for an end of dialogue to confirm the clearance.

GETtheMANUALS.org

DF064 PRESENT OR STORED	COMBUSTION MISFIRING ON CYLINDER 6

NOTES	**Special note:** Indicates that the fault is confined to this cylinder. Priority for dealing with a combination of faults: – If the following faults: **DF059 Misfiring on cylinder 1;** **DF060 Misfiring on cylinder 2;** **DF061 Misfiring on cylinder 3;** **DF062 Misfiring on cylinder 4;** **DF063 Misfiring on cylinder 5;** **DF064 Misfiring on cylinder 6;** are all present, carry out procedure **DF436 Combustion misfire fault finding**. – If the fault is confined to this cylinder, deal with fault **DF436: Detection of misfires** first.

Check:
– condition and connection of the injector,
– condition of the pipe supplying fuel to the injector,
– condition and type of spark plug,
– the operation of the coil following fault procedure **DF345 Ignition coil circuit**,
– compression.
Repair if necessary.

AFTER REPAIR	Follow the instructions to confirm repair. Deal with any other faults. Clear the stored faults. Switch off the ignition and wait for an end of dialogue to confirm the clearance.

GETtheMANUALS.org

DF085 PRESENT OR STORED	FUEL PUMP RELAY CONTROL CIRCUIT

NOTES	**Conditions for applying the fault finding procedure to stored faults:** The fault appears after the ignition has been switched on.
	Special note: – **OBD warning light** lit.

Disconnect the battery and the injection computer.
Check **the cleanliness** and **condition** of the computer connections.
Check **the cleanliness** and **condition** of the fuel pump relay connector connections.
Repair if necessary.

Using the universal bornier, check for **insulation** and **continuity** on the following connection:

Computer, connector **B, track 96** ⟶ **track 2** of the fuel pump relay

Repair if necessary.

If the fault is still present**, contact the Techline**.

AFTER REPAIR	Follow the instructions to confirm repair. Deal with any other faults. Clear the stored faults. Switch off the ignition and wait for an end of dialogue to confirm the clearance.

GETtheMANUALS.org

DF090 PRESENT OR STORED	VEHICLE SPEED SENSOR CIRCUIT 1.DEF: Inconsistency of the signal

NOTES	None.

Run a multiplex network test (see **88B, Multiplex**).
Carry out fault finding on ABS and ESP system (see **38C, ABS**).

AFTER REPAIR	Follow the instructions to confirm repair. Deal with any other faults. Clear the stored faults. Switch off the ignition and wait for an end of dialogue to confirm the clearance.

GETtheMANUALS.org

DF106 PRESENT OR STORED	CRUISE CONTROL/SPEED LIMITER SELECTOR SWITCH ON STEERING WHEEL

NOTES	Using parameter **PR071 Computer supply voltage**, check that the battery voltage is not below 11 V. Switch off the ignition and wait for dialogue between the computer and the diagnostic tool to end, then switch on the ignition again to confirm the fault.

Check the **condition and connection** of the function selector switch connector.
Repair if necessary.

Check **the insulation, continuity and absence of interference resistance** on the following connections:

Track 55, injection computer connector A → **Function selector switch**

Injection computer, connector A, track 54 → **Function selector switch**

Repair if necessary.

If the problem persists, replace the switch on the steering wheel.

AFTER REPAIR	Follow the instructions to confirm repair. Deal with any other faults. Clear the stored faults. Switch off the ignition and wait for an end of dialogue to confirm the clearance.

GETtheMANUALS.org

DF116 PRESENT OR STORED	MULTIPLEX NETWORK

NOTES	None.

Carry out a fault finding procedure on the multiplex network (see **88B Multiplex network**).

AFTER REPAIR	Follow the instructions to confirm repair. Deal with any other faults. Clear the stored faults. Switch off the ignition and wait for an end of dialogue to confirm the clearance.

GETtheMANUALS.org

DF151 PRESENT OR STORED	MAIN RELAY CIRCUIT CO.0 : Open circuit or short circuit to earth

NOTES	Using parameter **PR071 Computer supply voltage**, check that the battery voltage is not below 11 V. Switch off the ignition and wait for dialogue between the computer and the diagnostic tool to end, then switch on the ignition again to confirm the fault.

Check **the condition of the battery and the vehicleearths**.
Repair if necessary.

Check the **connection and condition of the main relay connector**.
Repair if necessary.

Check the **main relay coil**.
Replace the relay if necessary.

Check **for 12 V on tracks 1 and 5 of the main relay**.
Repair the wiring up to the fuse if necessary.

Check **the insulation, continuity and absence of interference resistance** on the following connections:

Injection computer, connector A, track 44 ⟶ **Track 2 of the main relay**

Injection computer, connector B, track 120 ⟶ **Track 3 of the main relay**

Repair if necessary.

AFTER REPAIR	Follow the instructions to confirm repair. Deal with any other faults. Clear the stored faults. Switch off the ignition and wait for an end of dialogue to confirm the clearance.

GETtheMANUALS.org

DF154 PRESENT OR STORED	FLYWHEEL SIGNAL SENSOR CIRCUIT 1.DEF: No signal 2.DEF: Inconsistent signal

NOTES	**Conditions for applying the fault finding procedure to stored faults:** The fault is declared present when the engine is running.
	Special note: In the event of flywheel signal loss, the OBD warning light is illuminated: injection in defect mode.
	Use the Wiring Diagrams Technical Note, ESPACE 4 ph I / II / VELSATIS ph I / II.

Test the battery and run fault finding on the charging circuit (**see Technical Note 6014A, Checking the charging circuit**).
Check the **cleanliness** and **condition** of the flywheel signal sensor connectors. Repair if necessary.
Check that the injection computer connector is clean and in good condition. Repair if necessary.
With the ignition on, check for a voltage of between **4.5 and 6 volts** on connection **3FB** of the flywheel signal sensor, **component code 149**. Repair if necessary.
Use the universal bornier to check the insulation and continuity of the following connections: Between the injection computer, **component code 120** and the **flywheel signal sensor, component code 149**. **– connection code 3BL** **– connection code 3FB** **– connection code 3BG** If there is a repair procedure (see **Technical Note 6015A, Repairing electrical wiring, Wiring: Precautions for repair**), repair the wiring, otherwise replace the wiring.
If the fault is still present, replace the flywheel signal sensor.
If the problem is still present, contact the Techline.

AFTER REPAIR	Follow the instructions to confirm repair. Deal with any other faults. Clear the stored faults. Switch off the ignition and wait for an end of dialogue to confirm the clearance.

GETtheMANUALS.org

DF200 PRESENT OR STORED	ATMOSPHERIC PRESSURE SENSOR CO.0 : Open circuit or short circuit to earth CO.1 : Short circuit or open circuit to + 12 V 1.DEF: Inconsistency of the signal

NOTES	**Priority for dealing with a combination of faults:** Apply the procedure for dealing with faults **DF328 Throttle potentiometer circuit or DF008 Throttle potentiometer circuit gang 1** first if they are present or stored.
	Using parameter **PR071 Computer supply voltage**, check that the battery voltage is not below 11 V. Switch off the ignition and wait for dialogue between the computer and the diagnostic tool to end, then switch on the ignition again to confirm the fault.

Check the **connection and condition of the atmospheric pressure sensor connector**.
Replace the connector if necessary.

Check that the pressure sensor is **pneumatically connected**.
Repair if necessary.

Check **the insulation, continuity and absence of interference resistance** on the following connections:

- **Injection computer, connector A, track 43** → **Track C of the manifold pressure sensor**
- **Injection computer, connector A, track 22** → **Manifold pressure sensor, track B**
- **Injection computer, connector A, track 62** → **Manifold pressure sensor, track A**

Repair if necessary.

AFTER REPAIR	Follow the instructions to confirm repair. Deal with any other faults. Clear the stored faults. Switch off the ignition and wait for an end of dialogue to confirm the clearance.

GETtheMANUALS.org

DF301 PRESENT OR STORED	AIR INLET CIRCUIT CO.0 : Open circuit or short circuit to earth

NOTES	Using parameter **PR071 Computer supply voltage**, check that the battery voltage is not below 11 V. Switch off the ignition and wait for dialogue between the computer and the diagnostic tool to end, then switch on the ignition again to confirm the fault.

Check the **connection and condition of the variable inlet solenoid valve connector**.
Repair if necessary.

With the ignition switched on, check for **12 V** on track A1 of the variable inlet solenoid valve. Repair the line to the main relay if necessary.

Check **the insulation, continuity and the absence of interference resistance** of the following connections:

Injection computer, connector A, track 7 ⟶ **Track 2 of the variable inlet solenoid valve**

Repair if necessary.

If necessary, replace the variable inlet solenoid valve.

AFTER REPAIR	Follow the instructions to confirm repair. Deal with any other faults. Clear the stored faults. Switch off the ignition and wait for an end of dialogue to confirm the clearance.

GETtheMANUALS.org

DF328 PRESENT OR STORED	THROTTLE POTENTIOMETER CIRCUIT CO.0 : Open circuit or short circuit to earth CO.1 : Short circuit or open circuit to + 12 V 1.DEF: Inconsistency of the signal 2.DEF: Signal outside lower limit

NOTES	**Priority for dealing with a combination of faults:** Deal first with the **DF425 First sensor reference voltage fault** if it is present or stored.
	Using parameter **PR071 Computer supply voltage**, check that the battery voltage is not below 11 V. Switch off the ignition and wait for dialogue between the computer and the diagnostic tool to end, then switch on the ignition again to confirm the fault.

Check **the connection and condition** of the throttle potentiometer connector.
Replace the connector if necessary.

Check **the insulation, continuity and the absence of interference resistance** of the following connections:

- **Injection computer, connector A, track 24** → **Track A1 of the throttle potentiometer**
- **Injection computer, connector A, track 19** → **Track A2 of the throttle potentiometer**
- **Injection computer, connector A, track 20** → **Track A4 of the throttle potentiometer**
- **Injection computer, connector A, track 23** → **Track A5 of the throttle potentiometer**

Repair if necessary.

AFTER REPAIR	Follow the instructions to confirm repair. Deal with any other faults. Clear the stored faults. Switch off the ignition and wait for an end of dialogue to confirm the clearance.

GETtheMANUALS.org

DF330 PRESENT OR STORED	PINKING SENSOR CIRCUIT CO.0: Open circuit or short circuit to earth CO.1: Short circuit or open circuit to + 12 V

NOTES	None.

Check the **connection and condition of the pinking sensor connector**.
Replace the connector if necessary.

Check the **tightness of the pinking sensor** on the engine block.
Repair if necessary.

Check **the insulation, continuity and the absence of interference resistance** of the following connections:

Injection computer, connector A, track 16 → **Track 1 of the pinking sensor**

Injection computer, connector A, track 35 → **Track 2 of the pinking sensor**

Earth → **Pinking sensor screening**

Repair if necessary.

If everything is correct, replace the pinking sensor.

AFTER REPAIR	Follow the instructions to confirm repair. Deal with any other faults. Clear the stored faults. Switch off the ignition and wait for an end of dialogue to confirm the clearance.

GETtheMANUALS.org

DF333 PRESENT OR STORED	INJECTION → AUTOMATIC TRANSMISSION CONNECTION 1.DEF: No signal

NOTES	**Priority for dealing with a combination of faults:** Deal with faults **DF009 Pedal potentiometer circuit gang 2 or DF491 Electronic Stability Program (ESP)** first if they are present or stored; check the computer earth lines on **tracks 115** and **116** using the **ALP 1** procedure.
	Using parameter **PR071 Computer supply voltage**, check that the battery voltage is not below 11 V. Switch off the ignition and wait for dialogue between the computer and the diagnostic tool to end, then switch on the ignition again to confirm the fault.

Run a multiplex network test (see **88B, Multiplexing**).
Carry out fault finding on the automatic transmission (see **23A, Automatic transmission**).

AFTER REPAIR	Follow the instructions to confirm repair. Deal with any other faults. Clear the stored faults. Switch off the ignition and wait for an end of dialogue to confirm the clearance.

GETtheMANUALS.org

DF345 PRESENT OR STORED	IGNITION COIL CIRCUIT

NOTES	**Conditions for detecting the fault by injection computer:** Engine operating with starter motor activated or running for 10 seconds. **If one cylinder is misfiring, look for faults on that cylinder first.** Using parameter **PR071 Computer supply voltage**, check that the battery voltage is not below 11 V. Switch off the ignition and wait for dialogue between the computer and the diagnostic tool to end, then switch on the ignition again to confirm the fault.

Check the **connection and condition of the coil connectors**.
Replace the connector(s) if necessary.

Check the **tightness of the pinking sensor** on the engine block.
Repair if necessary.

Check **the insulation, continuity and the absence of interference resistance** of the following connections:

- **Injection computer, connector B, track 92** → **track 1 of coil 1**
- **Injection computer, connector B, track 93** → **track 1 of coil 2**
- **Injection computer, connector B, track 94** → **track 1 of coil 3**
- **Injection computer, connector B, track 95** → **track 1 of coil 4**
- **Injection computer, connector B, track 84** → **Track 1 of coil 5**
- **Injection computer, connector B, track 85** → **track 1 of coil 6**

Repair if necessary.

With the ignition on, check for **12 V on track A3 of each coil**.
Repair if necessary.

If everything is correct:
– check that the spark plugs are in good condition,
– fit the spark plugs and connect them to their coils; place the plugs in contact with a reliable earth and activate the starter motor to check that all the coils give a good spark.

Replace any non-conforming spark plug(s).

AFTER REPAIR	Follow the instructions to confirm repair. Deal with any other faults. Clear the stored faults. Switch off the ignition and wait for an end of dialogue to confirm the clearance.

GETtheMANUALS.org

DF374 PRESENT OR STORED	COMPUTER 1.DEF: Internal electrical fault

NOTES	Using parameter **PR071 Computer supply voltage**, check that the battery voltage is not below 11 V. Switch off the ignition and wait for dialogue between the computer and the diagnostic tool to end, then switch on the ignition again to confirm the fault.

Use the following procedure:
– Switch on the ignition.
– Clear the stored fault on the injection computer using the diagnostic tool.
– Switch off the ignition and wait for dialogue between the computer and the diagnostic tool to end.
– Switch on the ignition and establish dialogue with the injection computer.
If the computer fault is still present, contact the Techline.

AFTER REPAIR	Follow the instructions to confirm repair. Deal with any other faults. Clear the stored faults. Switch off the ignition and wait for an end of dialogue to confirm the clearance.

GETtheMANUALS.org

DF379 PRESENT OR STORED	CYLINDER 1 INJECTOR CONTROL 1.DEF: Open circuit or short circuit

NOTES	**Conditions for detecting the fault:** Run the engine. If the fuel pump does not operate, run the **AC015 Fuel pump relay** fault finding check first, because a fuel pump relay fault can cause this fault to occur.
	Using parameter **PR071 Computer supply voltage**, check that the battery voltage is not below 11 V. Switch off the ignition and wait for dialogue between the computer and the diagnostic tool to end, then switch on the ignition again to confirm the fault.

Check the **injector 1 resistance.**
Replace the injector if the resistance is not 15 Ω ± 0.8 Ω at 20˚C.

While the starter motor is operating, check for **12 V** on injector 1.
If necessary, repair the line up to the fuel pump relay.

Check the **insulation, continuity and the absence of interference resistance** of the following connection:

Injection computer, connector B, track 106 ⟶ **Track 2 of injector 1**

Repair if necessary.

Note:
If all the injectors are faulty, check that the fuel pump relay is not defective.

AFTER REPAIR	Follow the instructions to confirm repair. Deal with any other faults. Clear the stored faults. Switch off the ignition and wait for an end of dialogue to confirm the clearance.

GETtheMANUALS.org

DF380 PRESENT OR STORED	CYLINDER 2 INJECTOR CONTROL 1.DEF: Open circuit or short circuit

NOTES	**Conditions for detecting the fault:** Run the engine. If the fuel pump does not operate, run the **AC015 Fuel pump relay** fault finding check first, because a fuel pump relay fault can cause this fault to occur.
	Using parameter **PR071 Computer supply voltage**, check that the battery voltage is not below 11 V. Switch off the ignition and wait for dialogue between the computer and the diagnostic tool to end, then switch on the ignition again to confirm the fault.

Check the **injector 1 resistance.**
Replace the injector if the resistance is not 15 Ω ± 0.8 Ω at 20˚C.

While the starter motor is operating, check for **12 V** on injector 2.
If necessary, repair the line up to the fuel pump relay.

Check the **insulation, continuity and the absence of interference resistance** of the following connection:

Injection computer, connector B, track 107 ⟶ **Track 2 of injector 2**

Repair if necessary.

Note:
If all the injectors are faulty, check that the fuel pump relay is not defective.

AFTER REPAIR	Follow the instructions to confirm repair. Deal with any other faults. Clear the stored faults. Switch off the ignition and wait for an end of dialogue to confirm the clearance.

GETtheMANUALS.org

DF381 PRESENT OR STORED	CYLINDER 3 INJECTOR CONTROL 1.DEF: Open circuit or short circuit

NOTES	**Conditions for detecting the fault:** Run the engine. If the fuel pump does not operate, run the **AC015 Fuel pump relay** fault finding check first, because a fuel pump relay fault can cause this fault to occur.
	Using parameter **PR071 Computer supply voltage**, check that the battery voltage is not below 11 V. Switch off the ignition and wait for dialogue between the computer and the diagnostic tool to end, then switch on the ignition again to confirm the fault.

Check the **resistance of injector 3**.
Replace the injector if the resistance is not 15 Ω ± 0.8 Ω at 20˚C.

While the starter motor is operating, check for **12 V** on injector 3.
If necessary, repair the line up to the fuel pump relay.

Check the **insulation, continuity and the absence of interference resistance** of the following connection:

Injection computer, connector B, track 108 ⟶ **Track 2 of injector 3**

Repair if necessary.

Note:
If all the injectors are faulty, check that the fuel pump relay is not defective.

AFTER REPAIR	Follow the instructions to confirm repair. Deal with any other faults. Clear the stored faults. Switch off the ignition and wait for an end of dialogue to confirm the clearance.

GETtheMANUALS.org

DF382 PRESENT OR STORED	CYLINDER 4 INJECTOR CONTROL 1.DEF: Open circuit or short circuit

NOTES	**Conditions for detecting the fault:** Run the engine. If the fuel pump does not operate, run the **AC015 Fuel pump relay** fault finding check first, because a fuel pump relay fault can cause this fault to occur.
	Using parameter **PR071 Computer supply voltage**, check that the battery voltage is not below 11 V. Switch off the ignition and wait for dialogue between the computer and the diagnostic tool to end, then switch on the ignition again to confirm the fault.

Check the **resistance of injector 4**.
Replace the injector if the resistance is not 15 Ω ± 0.8 Ω at 20˚C.

While the starter motor is operating, check for **12 V** on injector 4.
If necessary, repair the line up to the fuel pump relay.

Check the **insulation, continuity and the absence of interference resistance** of the following connection:

Injection computer, connector B, track 100 ⟶ **Track 2 of injector 4**

Repair if necessary.

Note:
If all the injectors are faulty, check that the fuel pump relay is not defective.

AFTER REPAIR	Follow the instructions to confirm repair. Deal with any other faults. Clear the stored faults. Switch off the ignition and wait for an end of dialogue to confirm the clearance.

GETtheMANUALS.org

DF411 PRESENT OR STORED	BRAKE PEDAL SENSOR CIRCUIT 1.DEF: Inconsistency of the signal

NOTES	When running this fault finding check, the ABS/ESP computer must not be faulty. If fault **DF116: Multiplex network** is present, deal with it first. Switch off the ignition and wait for an end of dialogue to confirm the fault.

Check the **connection and condition of the brake pedal switch connector**. Replace the connector if necessary.
Check the **operation of the brake pedal switch**. Replace the switch if necessary.
Check the **insulation, continuity and the absence of interference resistance** of the following connection: **Injection computer, connector A, track 11** ⟶ **Track 3 of the brake pedal switch connector** Repair if necessary.
Check the connection between the brake pedal sensor and the ABS computer (see **38C, ABS system**).

AFTER REPAIR	Follow the instructions to confirm repair. Deal with any other faults. Clear the stored faults. Switch off the ignition and wait for an end of dialogue to confirm the clearance.

GETtheMANUALS.org

DF413 PRESENT OR STORED	MOTORISED THROTTLE 1.DEF: Motorised throttle: closed

NOTES	**Priority for dealing with a combination of faults:** – Deal first with fault **DF413 Motorised throttle** if it is present and check the computer earth lines on tracks **118** and **121** using the **ALP 1** procedure. – Deal with fault **DF487 Programming throttle stops** first if it is present. Using parameter **PR071 Computer supply voltage**, check that the battery voltage is not below 11 V. Switch off the ignition and wait for dialogue between the computer and the diagnostic tool to end, then switch on the ignition again to confirm the fault.

Check the **connection and condition of the motorised throttle connector**.
Repair if necessary.

Check **the insulation, continuity and the absence of interference resistance** of the following connections:

Injection computer, connector A, track 62 → **track 6 of the motorised throttle valve**

Injection computer, connector A, track 1 → **track 3 of the motorised throttle valve**

Repair if necessary.

If everything is correct, replace the motorised throttle body.

After replacing the throttle valve, program the air path. (See Replacement of components, Configurations and programming)

AFTER REPAIR	Follow the instructions to confirm repair. Deal with any other faults. Clear the stored faults. Switch off the ignition and wait for an end of dialogue to confirm the clearance.

GETtheMANUALS.org

DF425 PRESENT OR STORED	FIRST SENSOR REFERENCE VOLTAGE 1.DEF: Open circuit or short circuit

NOTES	This fault takes priority over the following faults: **DF328 Throttle potentiometer circuit;** **DF008 Pedal potentiometer circuit gang 1;** **DF009 Pedal potentiometer circuit gang 2;** **DF200 Atmospheric pressure sensor;** **DF579 Power-assisted steering pressure sensor circuit;** **DF106 Cruise control/speed limiter selector switches on steering wheel** **DF056 Air flowmeter circuit.** Check that parameter **PR071: Computer supply voltage** matches the battery voltage. If the voltage shown by parameter **PR071** is greater than the battery voltage, there is a short circuit to earth. If the voltage shown by parameter **PR071** is less than the battery voltage, there is a short circuit to + 12 V. Using parameter **PR071 Computer supply voltage**, check that the battery voltage is not below 11 V. Switch off the ignition and wait for dialogue between the computer and the diagnostic tool to end, then switch on the ignition again to confirm the fault.

Check the condition of the connectors for the following components:
– accelerator pedal potentiometer,
– flow sensor,
– power-assisted steering pressure sensor,
– manifold pressure sensor,
– throttle valve potentiometer.
Replace the connector(s) if necessary.

To check if the fault changes from present to stored, disconnect the following sensors, **one** by **one**:
– accelerator pedal potentiometer,
– flow sensor,
– power-assisted steering pressure sensor,
– manifold pressure sensor,
– throttle valve potentiometer.
If necessary, deal with the fault that applies to the sensor.

AFTER REPAIR	Follow the instructions to confirm repair. Deal with any other faults. Clear the stored faults. Switch off the ignition and wait for an end of dialogue to confirm the clearance.

GETtheMANUALS.org

DF425 **CONTINUED**	

Check **the insulation, continuity and the absence of interference resistance** of the following connections:

- **Injection computer, connector A, track 43** → **track 1 of the throttle potentiometer**
- **Injection computer, connector A, track 43** → **track C of the manifold pressure sensor**
- **Injection computer, connector A, track 43** → **track 2 of the flowmeter**
- **Injection computer, connector A, track 43** → **track 3 of the power-assisted steering pressure sensor**
- **Injection computer, connector A, track 43** → **track 4 of the accelerator pedal potentiometer**
- **Injection computer, connector A, track 24** → **track 5 of the accelerator pedal potentiometer**

Repair if necessary.

If the fault has still not been solved, deal with the other faults and then proceed to the conformity check.

AFTER REPAIR	Follow the instructions to confirm repair. Deal with any other faults. Clear the stored faults. Switch off the ignition and wait for an end of dialogue to confirm the clearance.

GETtheMANUALS.org

DF429 PRESENT OR STORED	CRUISE CONTROL FUNCTION CO.0: Open circuit or short circuit to earth 1.DEF: Inconsistency of the signal 1.DEF: Internal electronic fault

NOTES	**Priority for dealing with a combination of faults:** Firstly, deal with the following faults: **DF333 Injection → automatic transmission connection,** **DF090 Vehicle speed sensor circuit,** **DF411 Brake pedal sensor circuit,** **DF116 Multiplex network,** **DF491 Electronic Stability Program (ESP),** **DF502 Cruise control or speed limiter button,** **DF411 Brake pedal sensor circuit,** **DF106 Cruise control/speed limiter selector switches on steering wheel** if they are present or stored, as these are the probable cause of this fault.

WARNING
This fault may appear if the wiring harness has been damaged.
Follow the procedure described in the Wiring Check in the Introduction.
This check enables the condition and the conformity of the engine wiring harness to be checked.

If fault **DF429 Vehicle speed regulator function** is declared present, refer to section on **Cruise control/Speed limiter** conformity check, and Interpretation of statuses **ET042 Cruise control/Speed limiter and ET415 Speed regulator deactivation**.
Check that by pressing the buttons the statuses change and that, with the ignition switched on, all the values are correct.
If the fault is still present, contact the Techline.

AFTER REPAIR	Follow the instructions to confirm repair. Deal with any other faults. Clear the stored faults. Switch off the ignition and wait for an end of dialogue to confirm the clearance.

GETtheMANUALS.org

DF431 PRESENT OR STORED	CYLINDER 5 INJECTOR CONTROL 1.DEF: Open circuit or short circuit

NOTES	**Conditions for detecting the fault:** Run the engine. If the fuel pump does not operate, run the **AC015 Fuel pump relay** fault finding check first, because a fuel pump relay fault can cause this fault to occur.
	Using parameter **PR071 Computer supply voltage**, check that the battery voltage is not below 11 V. Switch off the ignition and wait for dialogue between the computer and the diagnostic tool to end, then switch on the ignition again to confirm the fault.

Check the **resistance of injector 5**.
Replace the injector if the resistance is not 15 Ω ± 0.8 Ω at 20˚C.

While the starter motor is operating, check for **12 V** on injector 5.
If necessary, repair the line up to the fuel pump relay.

Check the **insulation, continuity and the absence of interference resistance** of the following connection:

Injection computer, connector B, track 99 → **Track 2 of injector 5**

Repair if necessary.

Note:
If all the injectors are faulty, check that the fuel pump relay is not defective.

AFTER REPAIR	Follow the instructions to confirm repair. Deal with any other faults. Clear the stored faults. Switch off the ignition and wait for an end of dialogue to confirm the clearance.

GETtheMANUALS.org

DF432 PRESENT OR STORED	CYLINDER 6 INJECTOR CONTROL 1.DEF: Open circuit or short circuit

NOTES	**Conditions for detecting the fault:** Run the engine. If the fuel pump does not operate, run the **AC015 Fuel pump relay** fault finding check first, because a fuel pump relay fault can cause this fault to occur.
	Using parameter **PR071 Computer supply voltage**, check that the battery voltage is not below 11 V. Switch off the ignition and wait for dialogue between the computer and the diagnostic tool to end, then switch on the ignition again to confirm the fault.

Check the **resistance of injector 6**.
Replace the injector if the resistance is not 15 Ω ± 0.8 Ω at 20˚C.

While the starter motor is operating, check for **12 V** on injector 6.
If necessary, repair the line up to the fuel pump relay.

Check the **insulation, continuity and the absence of interference resistance** of the following connection:

Injection computer, connector B, track 98 → **Track 2 of injector 6**

Repair if necessary.

Note:
If all the injectors are faulty, check that the fuel pump relay is not defective.

AFTER REPAIR	Follow the instructions to confirm repair. Deal with any other faults. Clear the stored faults. Switch off the ignition and wait for an end of dialogue to confirm the clearance.

GETtheMANUALS.org

DF436 PRESENT OR STORED	DETECTION OF ENGINE MISFIRING

NOTES	**Priority for dealing with a combination of faults:** Firstly, deal with the following faults: **DF379 Cylinder 1 injector control,** **DF380 Cylinder 2 injector control,** **DF381 Cylinder 3 injector control,** **DF382 Cylinder 4 injector control,** **DF431 Cylinder 5 injector control,** **DF432 Cylinder 6 injector control,** if they are present or stored. If one or more of the following faults: **DF059 Combustion misfire in cylinder 1,** **DF060 Misfiring on cylinder 1;** **DF061 Misfiring on cylinder 1;** **DF062 Misfiring on cylinder 1;** **DF063 Misfiring on cylinder 1;** **DF064 Misfiring on cylinder 1;** are present or stored**,** deal with them separately. If none or all six of the above-mentioned faults occur, follow this fault finding procedure.

For each cylinder, check the:
– condition and connection of the injector,
– condition and type of spark plug,
– operation of the coil following fault procedure **DF345 Ignition coil circuit**,
– compression.
Repair if necessary.

Check the engine target.
Repair if necessary.

Check the fuel system:
– the condition of the fuel filter,
– the fuel flow rate and pressure.
– the condition of the fuel pump,
– the conformity of the fuel,
– the cleanliness of the tank.
Repair if necessary.

AFTER REPAIR	Follow the instructions to confirm repair. Deal with any other faults. Clear the stored faults. Switch off the ignition and wait for an end of dialogue to confirm the clearance.

GETtheMANUALS.org

DF439 PRESENT OR STORED	IDLE SPEED REGULATION 1.DEF: Lower end stop 2.DEF: Top end stop CO.0: Open circuit or short circuit to earth

NOTES	**Priority for dealing with a combination of faults:** Deal with fault **DF413 Motorised throttle** first if it is present and check the computer earth lines on tracks **118** and **121** using procedure **ALP 1 (see ALPs)**. Deal with any present faults relating to the motorised throttle or the accelerator pedal.

Check that status **ET051: Throttle stop programming** is **DONE** and that status **ET278: Throttle position: no load** is recognised and ACTIVE.

AFTER REPAIR	Follow the instructions to confirm repair. Deal with any other faults. Clear the stored faults. Switch off the ignition and wait for an end of dialogue to confirm the clearance.

GETtheMANUALS.org

DF448 PRESENT OR STORED	UPSTREAM OXYGEN SENSOR NO. 1 CO: Open circuit CC.0: Short circuit to earth CO.1: Short circuit or open circuit to + 12 V 1.DEF: Inconsistency of the signal

NOTES	None.

Check the **connection and condition of upstream oxygen sensor connector no. 1**.
Repair if necessary.

Make sure that there is **no air intake**.

If the vehicle is used frequently in town, **decoke the engine.**

Check **the insulation, continuity and the absence of interference resistance** of the following connections:

Injection computer, connector A, track 78 → **Track 4 of the oxygen sensor**

Injection computer, connector A, track 59 → **Track 1 of the oxygen sensor**

Repair if necessary.

Replace the oxygen sensor if necessary.

AFTER REPAIR	Follow the instructions to confirm repair. Deal with any other faults. Clear the stored faults. Switch off the ignition and wait for an end of dialogue to confirm the clearance.

GETtheMANUALS.org

DF449 PRESENT OR STORED	UPSTREAM OXYGEN SENSOR NO. 2 CO: Open circuit CC.0: Short circuit to earth CO.1: Short circuit or open circuit to + 12 V 1.DEF: Inconsistency of the signal

NOTES	None.

Check the **connection and condition of upstream oxygen sensor connector no. 2**.
Repair if necessary.

Make sure that there is **no air intake**.

If the vehicle is used frequently in town, **decoke the engine.**

Check **the insulation, continuity and the absence of interference resistance** of the following connections:

Injection computer, connector A, track 79 → **Track 4 of the oxygen sensor**

Injection computer, connector A, track 60 → **Track 1 of the oxygen sensor**

Repair if necessary.

Replace the oxygen sensor if necessary.

AFTER REPAIR	Follow the instructions to confirm repair. Deal with any other faults. Clear the stored faults. Switch off the ignition and wait for an end of dialogue to confirm the clearance.

GETtheMANUALS.org

DF450 PRESENT OR STORED	DOWNSTREAM OXYGEN SENSOR NO. 1 CO.0: Open circuit or short circuit to earth CO.1: Short circuit or open circuit to + 12 V 1.DEF: Inconsistency of the signal

NOTES	None.

Check the **connection and condition of downstream oxygen sensor connector no. 1**.
Repair if necessary.

Make sure that there is **no air intake**.

If the vehicle is used frequently in town, **decoke the engine.**

Check **the insulation, continuity and the absence of interference resistance** of the following connections:

Injection computer, connector A, track 76 → **Track 4 of the oxygen sensor**

Injection computer, connector A, track 57 → **Track 1 of the oxygen sensor**

Repair if necessary.

Replace the oxygen sensor if necessary.

AFTER REPAIR	Follow the instructions to confirm repair. Deal with any other faults. Clear the stored faults. Switch off the ignition and wait for an end of dialogue to confirm the clearance.

GETtheMANUALS.org

DF451 PRESENT OR STORED	DOWNSTREAM OXYGEN SENSOR NO. 2 CO.0: Open circuit or short circuit to earth CO.1: Short circuit or open circuit to + 12 V 1.DEF: Inconsistency of the signal

NOTES	None.

Check the **connection and condition of downstream oxygen sensor connector no. 2**.
Repair if necessary.

Make sure that there is **no air intake**.

If the vehicle is used frequently in town, **decoke the engine.**

Check **the insulation, continuity and the absence of interference resistance** of the following connections:

Injection computer, connector A, track 77 → **Track 4 of the oxygen sensor**

Injection computer, connector A, track 58 → **Track 1 of the oxygen sensor**

Repair if necessary.

Replace the oxygen sensor if necessary.

AFTER REPAIR	Follow the instructions to confirm repair. Deal with any other faults. Clear the stored faults. Switch off the ignition and wait for an end of dialogue to confirm the clearance.

GETtheMANUALS.org

DF466 PRESENT OR STORED	UPSTREAM OXYGEN SENSOR NO. 1 HEATING CO.1: Short circuit or open circuit to + 12 V CO.0: Open circuit or short circuit to earth

NOTES	None.

Check the **connection and condition of upstream oxygen sensor connector no. 1**.
Repair if necessary.

Check the **oxygen sensor heater resistance**.
Replace the sensor if the resistance is not approximately 4 Ω ± 1 Ω.

Check for **12 V on the oxygen sensor**.
Repair the line if necessary.

Check the **insulation, continuity and the absence of interference resistance** of the following connection:

Injection computer, connector B, track 109 ⟶ **Track 2 of the oxygen sensor**

Repair if necessary.

AFTER REPAIR	Follow the instructions to confirm repair. Deal with any other faults. Clear the stored faults. Switch off the ignition and wait for an end of dialogue to confirm the clearance.

GETtheMANUALS.org

DF467 PRESENT OR STORED	UPSTREAM OXYGEN SENSOR NO. 2 HEATING CO.1: Short circuit or open circuit to + 12 V CO.0: Open circuit or short circuit to earth

NOTES	None.

Check the **connection and condition of upstream oxygen sensor connector no. 2**. Repair if necessary.
Check the **oxygen sensor heater resistance**. Replace the sensor if the resistance is not approximately 4 Ω ± 1 Ω.
Check for **12 V on the oxygen sensor**. Repair the line if necessary.
Check the **insulation, continuity and the absence of interference resistance** of the following connection: **Injection computer, connector B, track 110 ⟶ track 2 of the oxygen sensor** Repair if necessary.

AFTER REPAIR	Follow the instructions to confirm repair. Deal with any other faults. Clear the stored faults. Switch off the ignition and wait for an end of dialogue to confirm the clearance.

GETtheMANUALS.org

DF468 PRESENT OR STORED	DOWNSTREAM OXYGEN SENSOR NO. 1 HEATING CO.1: Short circuit or open circuit to + 12 V CO.0: Open circuit or short circuit to earth

NOTES	None.

Check the **connection and condition of downstream oxygen sensor connector no. 1**.
Repair if necessary.

Check the **oxygen sensor heater resistance**.
Replace the sensor if the resistance is not approximately 4 Ω ± 1 Ω.

Check for **12 V on the oxygen sensor**.
Repair the line if necessary.

Check the **insulation, continuity and the absence of interference resistance** on the following connection:

Injection computer, connector B, track 101 ⟶ **Track 2 of the oxygen sensor**

Repair if necessary.

AFTER REPAIR	Follow the instructions to confirm repair. Deal with any other faults. Clear the stored faults. Switch off the ignition and wait for an end of dialogue to confirm the clearance.

GETtheMANUALS.org

DF469 PRESENT OR STORED	DOWNSTREAM OXYGEN SENSOR NO. 2 HEATING CO.1: Short circuit or open circuit to + 12 V CO.0: Open circuit or short circuit to earth

NOTES	None.

Check the **connection and condition of downstream oxygen sensor connector no. 2**.
Repair if necessary.

Check the **oxygen sensor heater resistance**.
Replace the sensor if the resistance is not approximately 4 Ω ± 1 Ω.

Check for **12 V on the oxygen sensor**.
Repair the line if necessary.

Check the **insulation, continuity and the absence of interference resistance** of the following connection:

Injection computer, connector B, track 102 ⟶ **Track 2 of the oxygen sensor**

Repair if necessary.

AFTER REPAIR	Follow the instructions to confirm repair. Deal with any other faults. Clear the stored faults. Switch off the ignition and wait for an end of dialogue to confirm the clearance.

GETtheMANUALS.org

DF470 PRESENT OR STORED	BANK A FUEL SUPPLY

NOTES	None.

– Check the fitting and condition of the air filter.
– Check the condition of the air inlet circuit.

Check:
– the fuel filter,
– the condition of the fuel pump,
– the fuel flow rate and pressure,
– the condition of the fuel pressure regulator,
– the condition of the fuel circuit pipes,
– the condition of the injector rails,
– the condition of the injectors (leaks, etc.),
– the cleanliness of the tank.
Repair or replace defective component(s) if necessary.

AFTER REPAIR	Follow the instructions to confirm repair. Deal with any other faults. Clear the stored faults. Switch off the ignition and wait for an end of dialogue to confirm the clearance.

GETtheMANUALS.org

DF471 PRESENT OR STORED	BANK B FUEL SUPPLY

NOTES	None.

– Check the fitting and condition of the air filter.
– Check the condition of the air inlet circuit.

Check:
– the fuel filter,
– the condition of the fuel pump,
– the fuel flow rate and pressure,
– the condition of the fuel pressure regulator,
– the condition of the fuel circuit pipes,
– the condition of the injector rails,
– the condition of the injectors (leaks, etc.),
– the cleanliness of the tank.
Repair or replace defective component(s) if necessary.

AFTER REPAIR	Follow the instructions to confirm repair. Deal with any other faults. Clear the stored faults. Switch off the ignition and wait for an end of dialogue to confirm the clearance.

GETtheMANUALS.org

DF479 PRESENT OR STORED	THROTTLE VALVE SERVO

NOTES	**Priority for dealing with a combination of faults:** If fault **DF439: Idle speed regulation** is present, deal with it first. Using parameter **PR071 Computer supply voltage**, check that the battery voltage is not below 11 V. Switch off the ignition and wait for dialogue between the computer and the diagnostic tool to end, then switch on the ignition again to confirm the fault.

Check the **connection and condition of the connector** of the motorised throttle safety relay. Replace the connector if necessary.

Check for **+ 12 V** on track 5 of the motorised throttle safety relay. Repair the line up to the fuse if necessary.

With the ignition switched on, check for + 12 V on track 1 of the motorised throttle safety relay. Repair the line up to the main relay if necessary.

Check **the continuity on tracks 42 and 40** of the motorised throttle safety relay. Replace the relay if necessary.

Check **the insulation, continuity and the absence of interference resistance** of the following connections:

Injection computer, connector A, track 5 → **Motorised throttle safety relay track 38**

Injection computer, connector A, track 63 → **Motorised throttle safety relay, track 40**

Repair if necessary.

AFTER REPAIR	Follow the instructions to confirm repair. Deal with any other faults. Clear the stored faults. Switch off the ignition and wait for an end of dialogue to confirm the clearance.

GETtheMANUALS.org

DF487 PRESENT OR STORED	THROTTLE STOP PROGRAMMING

NOTES	**Priority for dealing with a combination of faults:** If fault **DF328: Throttle potentiometer circuit** is present, deal with it first.

Throttle stop programming has not been completed. The fault may be present following an inconsistency in the throttle position.
Carry out throttle stop programming (see **Configurations and programming**).

AFTER REPAIR	Follow the instructions to confirm repair. Deal with any other faults. Clear the stored faults. Switch off the ignition and wait for an end of dialogue to confirm the clearance.

GETtheMANUALS.org

DF491 PRESENT OR STORED	ELECTRONIC STABILITY PROGRAM (ESP) 1.DEF: No signal

NOTES	**Priority for dealing with a combination of faults:** If faults **DF333 Injection → automatic transmission connection and DF009 Pedal potentiometer circuit gang 2** are also present, check the computer earth lines on **tracks 115 and 116** using the **ALP 1 (see Fault finding charts) procedure**. Using parameter **PR071 Computer supply voltage**, check that the battery voltage is not below 11 V. Switch off the ignition and wait for dialogue between the computer and the diagnostic tool to end, then switch on the ignition again to confirm the fault.

Run a multiplex network test (see **88B, Multiplex network**).
Carry out fault finding on ABS and ESP system (see **38C, ABS**).

AFTER REPAIR	Follow the instructions to confirm repair. Deal with any other faults. Clear the stored faults. Switch off the ignition and wait for an end of dialogue to confirm the clearance.

GETtheMANUALS.org

DF502 PRESENT OR STORED	CRUISE CONTROL OR SPEED LIMITER BUTTON 1.DEF: Inconsistency of the signal

NOTES	Using parameter **PR071 Computer supply voltage**, check that the battery voltage is not below 11 V. Switch off the ignition and wait for dialogue between the computer and the diagnostic tool to end, then switch on the ignition again to confirm the fault.

Check **the connection and condition** of the cruise control/speed limiter switch connector. Repair if necessary.

Check **the insulation, continuity and the absence of interference resistance** of the following connections:

Injection computer, connector A, track 29 → **Speed limiter track switch**

Injection computer, connector A, track 30 → **Cruise control track switch**

Repair if necessary.

If everything is correct, replace the switch.

AFTER REPAIR	Follow the instructions to confirm repair. Deal with any other faults. Clear the stored faults. Switch off the ignition and wait for an end of dialogue to confirm the clearance.

GETtheMANUALS.org

DF508 PRESENT OR STORED	MOTORISED THROTTLE VALVE CONTROL 1.DEF: Throttle position error

NOTES	Switch off the ignition and wait for an end of dialogue to confirm the fault.

Check the **connection and condition of the motorised throttle connector**.
Replace the connector if necessary.

Check the condition of the motorised throttle body and that nothing is mechanically impeding the throttle movement.
Repair if necessary.

Check **the insulation, continuity and the absence of interference resistance** of the following connections:

Injection computer, connector A, track 24 → **Track 1 of the throttle potentiometer**

Injection computer, connector A, track 19 → **Track 2 of the throttle potentiometer**

Injection computer, connector A, track 20 → **Track 4 of the throttle potentiometer**

Injection computer, connector A, track 23 → **Track 5 of the throttle potentiometer**

Injection computer, connector A, track 62 → **Track 6 of the motorised throttle valve**

Injection computer, connector A, track 1 → **Track 3 of the motorised throttle valve**

Repair if necessary.

Using the conformity check, check **parameters PR538 Measured throttle voltage gang 2 and PR539 Measured throttle voltage gang 1** for throttle potentiometer output voltages.
Replace if not correct.

After replacing the throttle valve, program the air path. (See Replacement of components, Configurations and programming)

AFTER REPAIR	Follow the instructions to confirm repair. Deal with any other faults. Clear the stored faults. Switch off the ignition and wait for an end of dialogue to confirm the clearance.

GETtheMANUALS.org

DF536 PRESENT OR STORED	CANISTER SOLENOID VALVE CONTROL CIRCUIT CO.0: Open circuit or short circuit to earth CO.1: Short circuit or open circuit to + 12 V

NOTES	If the fuel pump does not operate, run the **AC015 Fuel pump relay** fault finding check first, because a fuel pump relay fault can cause this fault to occur. Using parameter **PR071 Computer supply voltage**, check that the battery voltage is not below 11 V. Switch off the ignition and wait for dialogue between the computer and the diagnostic tool to end, then switch on the ignition again to confirm the fault.

Check the **connection and condition of the canister bleed solenoid valve connector**.
Replace the connector if necessary.

Check the **resistance of the fuel vapour absorber bleed solenoid valve**.
Replace the valve if the resistance is not 8 Ω ± 0.4 Ω.

With the starter operating, check for **12 V on track A1 of the fuel vapour absorber bleed solenoid valve**.
If necessary, repair the line up to the fuel pump relay.

Check the **insulation, continuity and the absence of interference resistance** of the following connection:

Injection computer, connector B, track 89 ⟶ **Track 2 of the canister bleed solenoid valve**

Repair if necessary.

Using the conformity check, check **parameters PR538 Measured throttle voltage gang 2 and PR539 Measured throttle voltage gang 1** for throttle potentiometer output voltages.
Replace if not correct.

AFTER REPAIR	Follow the instructions to confirm repair. Deal with any other faults. Clear the stored faults. Switch off the ignition and wait for an end of dialogue to confirm the clearance.

GETtheMANUALS.org

DF567 PRESENT OR STORED	COMPUTER 1.DEF: Internal command module: ROM (Read Only Memory) error

NOTES	Using parameter **PR071 Computer supply voltage**, check that the battery voltage is not below 11 V. Switch off the ignition and wait for dialogue between the computer and the diagnostic tool to end, then switch on the ignition again to confirm the fault.

Use the following procedure:
– Switch on the ignition.
– Clear the stored fault on the injection computer using the diagnostic tool.
– Switch off the ignition and wait for dialogue between the computer and the diagnostic tool to end.
– Switch on the ignition and establish dialogue with the injection computer.
If the computer fault is still present, contact the Techline.

AFTER REPAIR	Follow the instructions to confirm repair. Deal with any other faults. Clear the stored faults. Switch off the ignition and wait for an end of dialogue to confirm the clearance.

GETtheMANUALS.org

DF579 PRESENT OR STORED	POWER-ASSISTED STEERING PRESSURE SENSOR CIRCUIT 1.DEF: Open circuit or short circuit CO.0: Open circuit or short circuit to earth

NOTES	Using parameter **PR071 Computer supply voltage**, check that the battery voltage is not below 11 V. Switch off the ignition and wait for dialogue between the computer and the diagnostic tool to end, then switch on the ignition again to confirm the fault.

Check **the condition and the connection** of the power-assisted steering pressure sensor connector.
Repair if necessary.

Check **the insulation, continuity and the absence of interference resistance** of the following connections:

- **Injection computer, connector A, track 62** → **Track A1 of the power-assisted steering pressure sensor**
- **Injection computer, connector A, track 18** → **Track A2 of the power-assisted steering pressure sensor**
- **Injection computer, connector A, track 43** → **Track A3 of the power-assisted steering pressure sensor**

Repair if necessary.

If everything is correct, replace the sensor.

AFTER REPAIR	Follow the instructions to confirm repair. Deal with any other faults. Clear the stored faults. Switch off the ignition and wait for an end of dialogue to confirm the clearance.

GETtheMANUALS.org

DF588 PRESENT OR STORED	CAMSHAFT No. 1 DEPHASER CONTROL

NOTES	Using parameter **PR071 Computer supply voltage**, check that the battery voltage is not below 11 V. Switch off the ignition and wait for dialogue between the computer and the diagnostic tool to end, then switch on the ignition again to confirm the fault.

With the ignition on, check for **12 V on track A2 of the camshaft dephaser solenoid valve**.
Repair if necessary.

Check the **insulation, continuity and the absence of interference resistance** of the following connection:

Injection computer, connector B, track 103 → **Track 2 of the camshaft dephaser solenoid valve**

Repair if necessary.

Note:
If a solenoid valve remains jammed open, the engine idle speed will probably be unstable.

AFTER REPAIR	Follow the instructions to confirm repair. Deal with any other faults. Clear the stored faults. Switch off the ignition and wait for an end of dialogue to confirm the clearance.

GETtheMANUALS.org

DF589 PRESENT OR STORED	CAMSHAFT No. 2 DEPHASER CONTROL

NOTES	Using parameter **PR071 Computer supply voltage**, check that the battery voltage is not below 11 V. Switch off the ignition and wait for dialogue between the computer and the diagnostic tool to end, then switch on the ignition again to confirm the fault.

With the ignition on, check for **12 V on track A2 of the camshaft dephaser solenoid valve**.
Repair if necessary.

Check the **insulation, continuity and the absence of interference resistance** of the following connection:

Injection computer, connector B, track 104 → **Track 2 of the camshaft dephaser solenoid valve, bank B**

Repair if necessary.

Note:
If a solenoid valve remains jammed open, the engine idle speed will probably be unstable.

AFTER REPAIR	Follow the instructions to confirm repair. Deal with any other faults. Clear the stored faults. Switch off the ignition and wait for an end of dialogue to confirm the clearance.

GETtheMANUALS.org

DF592 PRESENT OR STORED	No.1 CAMSHAFT SENSOR CIRCUIT 1.DEF: Inconsistency of the signal 2.DEF: No signal

NOTES	**Conditions for applying the fault finding procedure to stored faults:** The fault is declared present when the engine is running.
	Special note: OBD warning light lit: injection in defect mode.
	Use the Wiring Diagrams Technical Note, ESPACE 4 ph I / II / VELSATIS ph I / II.

Check that the camshaft sensor is correctly pushed into its housing.
Check that the camshaft sensor and its connectors are **clean** and **in good condition**.
Repair if necessary.

Check that the injection computer connector is clean and in good condition.
Repair if necessary.

With the ignition on, check for a voltage of between **4.5 and 6 volts** on connection **3FB** of the camshaft position sensor, **component number 1305**.
Repair if necessary.

Use the universal bornier to check the **insulation and continuity** of the following connections:
Between the injection computer, **component code 120** and the camshaft position sensor, **component code 1305**.
– connection code 3UY
– connection code 3FB
– connection code 3UM
If there is a repair procedure (see **Technical Note 6015A, Repairing electrical wiring, Wiring: Precautions for repair**), repair the wiring, otherwise replace the wiring.

If the fault is still present, replace the camshaft sensor.

If the problem is still present, contact the Techline.

AFTER REPAIR	Follow the instructions to confirm repair. Deal with any other faults. Clear the stored faults. Switch off the ignition and wait for an end of dialogue to confirm the clearance.

GETtheMANUALS.org

DF593 PRESENT OR STORED	CAMSHAFT SENSOR CIRCUIT No.2 1.DEF: Inconsistency of the signal 2.DEF: No signal

NOTES	**Conditions for applying the fault finding procedure to stored faults:** The fault is declared present when the engine is running.
	Special note: OBD warning light lit: injection in defect mode.
	Use the Wiring Diagrams Technical Note, ESPACE 4 ph I / II / VELSATIS ph I / II.

Check that the camshaft sensor is correctly pushed into its housing.
Check that the camshaft sensor and its connectors are **clean** and **in good condition**.
Repair if necessary.

Check that the injection computer connector is clean and in good condition.
Repair if necessary.

With the ignition on, check for a voltage of between **4.5 and 6 volts** on connection **3FB** of the camshaft position sensor, **component number 1306**.
Repair if necessary.

Use the universal bornier to check the **insulation and continuity** of the following connections:
Between the injection computer, **component code 120** and the camshaft position sensor, **component code 1306**.
– connection code 3VA
– connection code 3FB
– connection code 3UP
If there is a repair procedure (see **Technical Note 6015A, Repairing electrical wiring, Wiring: Precautions for repair**), repair the wiring, otherwise replace the wiring.

If the fault is still present, replace the camshaft sensor.

If the problem is still present, contact the Techline.

AFTER REPAIR	Follow the instructions to confirm repair. Deal with any other faults. Clear the stored faults. Switch off the ignition and wait for an end of dialogue to confirm the clearance.

GETtheMANUALS.org

DF594 PRESENT OR STORED	ROW 1 RICHNESS REGULATION 1.DEF: Inconsistency of the signal

NOTES	**Priority for dealing with a combination of faults:** Firstly, deal with the following faults: **DF056 Air flow sensor circuit,** **DF379 Cylinder 1 injector control,** **DF381 Cylinder 3 injector control,** **DF431 Cylinder 5 injector control,** **DF448 Upstream oxygen sensor no. 1;** **DF470 Fuel supply row A** and/or **DF471 Fuel supply row B** if they are present. Using parameter **PR071 Computer supply voltage**, check that the battery voltage is not below 11 V. Switch off the ignition and wait for dialogue between the computer and the diagnostic tool to end, then switch on the ignition again to confirm the fault.

Check that there are no **air leaks on the exhaust system**.
If the vehicle is driven frequently in town, **decoke the engine.**
Check the oxygen sensors using the fault procedures: **DF448 Upstream oxygen sensor no. 1;** **DF450 Downstream oxygen sensor no. 1;** **DF466 Upstream oxygen sensor no. 1 heating;** **DF468 Downstream oxygen sensor no. 1 heating.**
If the fault has still not been solved, deal with the other faults and then proceed to the conformity check.

AFTER REPAIR	Follow the instructions to confirm repair. Deal with any other faults. Clear the stored faults. Switch off the ignition and wait for an end of dialogue to confirm the clearance.

GETtheMANUALS.org

DF595 PRESENT OR STORED	ROW 2 RICHNESS REGULATION 1.DEF: Inconsistency of the signal

NOTES	**Priority for dealing with a combination of faults:** Firstly, deal with the following faults: **DF589 Camshaft no. 2 dephaser control;** **DF380 Cylinder 2 injector control;** **DF382 Cylinder 4 injector control;** **DF432 Cylinder 6 injector control;** **DF448 Upstream oxygen sensor no. 1;** **DF470 Fuel supply row A** and/or **DF471 Fuel supply row B** if they are present.

Check that there are no **air leaks on the exhaust system**.
If the vehicle is driven frequently in town, **decoke the engine**.
Check the oxygen sensors using the fault procedures: **DF449 Upstream oxygen sensor no. 2;** **DF451 Downstream oxygen sensor no. 2;** **DF467 Upstream oxygen sensor no. 2 heating;** **DF469 Downstream oxygen sensor no. 2 heating.**
If the fault has still not been solved, deal with the other faults and then proceed to the conformity check.

AFTER REPAIR	Follow the instructions to confirm repair. Deal with any other faults. Clear the stored faults. Switch off the ignition and wait for an end of dialogue to confirm the clearance.

GETtheMANUALS.org

DF596 PRESENT OR STORED	DETECTION OF OVERHEATING

NOTES	Indicates engine overheating or a coolant temperature fault. When the fault is present, the engine will not exceed **2000 rpm**.

Check the coolant temperature sensor circuit using fault procedure **DF002 Air temperature sensor circuit**.
Check the condition of the cooling system and run the engine until the fan starts to operate to see if the fault recurs.

AFTER REPAIR	Follow the instructions to confirm repair. Deal with any other faults. Clear the stored faults. Switch off the ignition and wait for an end of dialogue to confirm the clearance.

GETtheMANUALS.org

DF610 PRESENT OR STORED	FAULT ON ONE OF THE 2 CRUISE CONTROL/SPEED LIMITER BRAKE CONTACTS 1.DEF: Fault on one of the two brake pedal contacts

NOTES	When running this fault finding check, the ABS/ESP computer must not be faulty. **Priority for dealing with a combination of faults:** Deal with fault **DF116 Multiplex network** first if it is present. Using parameter **PR071 Computer supply voltage**, check that the battery voltage is not below 11 V. Switch off the ignition and wait for dialogue between the computer and the diagnostic tool to end, then switch on the ignition again to confirm the fault.
	Conditions for applying the fault finding procedure to stored faults: The fault is declared present: – with the engine running, – With the brake pedal depressed, – With cruise control ON.

Check that the pedal assembly is in good condition.
Check **the cleanliness** and **condition** of the dual-contact brake switch and its connections.
Repair if necessary.

Check the **operation of the brake pedal switch**.
Replace the switch if necessary.

Check the **insulation, continuity and the absence of interference resistance** of the following connection:

Injection computer, connector A, track 11 ⟶ **Brake pedal switch**

Repair if necessary.

Check the connection between the brake pedal sensor and the Anti-lock braking system computer (see **38C, Anti-lock braking system**).

AFTER REPAIR	Follow the instructions to confirm repair. Deal with any other faults. Clear the stored faults. Switch off the ignition and wait for an end of dialogue to confirm the clearance.

GETtheMANUALS.org

DF611 PRESENT OR STORED	FAULT ON THE 2 CRUISE CONTROL/SPEED LIMITER BRAKE CONTACTS 1.DEF: Fault on both brake pedal contacts

NOTES	When running this fault finding check, the ABS/ESP computer must not be faulty. **Priority for dealing with a combination of faults:** Deal with fault **DF116 Multiplex network** first if it is present. Using parameter **PR071 Computer supply voltage**, check that the battery voltage is not below 11 V. Switch off the ignition and wait for dialogue between the computer and the diagnostic tool to end, then switch on the ignition again to confirm the fault.
	Conditions for applying the fault finding procedure to stored faults: The fault is declared present: – with the engine running, – With the brake pedal depressed, – With the cruise control ON with a cruising speed set.

Check that the pedal assembly is in good condition.
Check **the cleanliness** and **condition** of the dual-contact brake switch and its connections.
Repair if necessary.

Check the **operation of the brake pedal switch**.
Replace the switch if necessary.

Check the **insulation, continuity and the absence of interference resistance** of the following connection:

Injection computer, connector A, track 11 ⟶ **Brake pedal switch**

Repair if necessary.

Check the connection between the brake pedal sensor and the Anti-lock braking system computer (see **38C, Anti-lock braking system**).

AFTER REPAIR	Follow the instructions to confirm repair. Deal with any other faults. Clear the stored faults. Switch off the ignition and wait for an end of dialogue to confirm the clearance.

GETtheMANUALS.org

DF648 PRESENT OR STORED	COMPUTER 1.DEF: Fault in EEPROM

NOTES	Using parameter **PR071 Computer supply voltage**, check that the battery voltage is not below 11 V. Switch off the ignition and wait for dialogue between the computer and the diagnostic tool to end, then switch on the ignition again to confirm the fault.

Use the following procedure:
– Switch on the ignition.
– Clear the stored fault on the injection computer using the diagnostic tool.
– Switch off the ignition and wait for dialogue between the computer and the diagnostic tool to end.
– Switch on the ignition and establish dialogue with the injection computer.
If the computer fault is still present, contact the Techline.

AFTER REPAIR	Follow the instructions to confirm repair. Deal with any other faults. Clear the stored faults. Switch off the ignition and wait for an end of dialogue to confirm the clearance.

GETtheMANUALS.org

DF989 PRESENT OR STORED	CATALYTIC PRE-CONVERTER No. 1

NOTES	**Apply this fault finding procedure whether the fault is present or stored.** Indicates lack of correlation between signals before and after the catalytic pre-converter, received by the two oxygen sensors on the front row.

Check that there are no **air leaks on the exhaust system**. Repair if necessary.
Visually check the condition of the catalytic pre-converter. A deformity may be causing it to malfunction. **Visually check for signs of thermal shock.**
A warm catalytic pre-converter may be damaged if it comes into contact with cold water.
Check that there has not been any **excessive consumption of oil** or **coolant**. Ask the customer if he has used an additive or other products of this kind. Such products can block the catalytic pre-converter, and damage its short or long term performance.
Check if the engine has been misfiring. This could damage the catalytic pre-converter.
Check the **driving noise**during a road test.
If the cause of the damage is identified, the catalytic pre-converter may be replaced. **If the catalytic pre-converter is replaced without finding the cause, the new catalytic pre-converter may be damaged very quickly.**

AFTER REPAIR	Follow the instructions to confirm repair. Deal with any other faults. Clear the stored faults. Switch off the ignition and wait for an end of dialogue to confirm the clearance.

GETtheMANUALS.org

DF990 PRESENT OR STORED	CATALYTIC PRE-CONVERTER No. 2

NOTES	**Apply this fault finding procedure whether the fault is present or stored.** Indicates lack of correlation between signals before and after the catalytic pre-converter, received by the two oxygen sensors on the back row.

Check that there are no **air leaks on the exhaust system**. Repair if necessary.
Visually check the condition of the catalytic pre-converter. A deformity may be causing it to malfunction. **Visually check for signs of thermal shock.**
A warm catalytic pre-converter may be damaged if it comes into contact with cold water.
Check that there has not been any **excessive consumption of oil** or **coolant**. Ask the customer if he has used an additive or other products of this kind. Such products can block the catalytic pre-converter, and damage its short or long term performance.
Check if the engine has been misfiring. This could damage the catalytic pre-converter.
Check the **driving noise**during a road test.
If the cause of the damage is identified, the catalytic pre-converter may be replaced. **If the catalytic pre-converter is replaced without finding the cause, the new catalytic pre-converter may be damaged very quickly.**

AFTER REPAIR	Follow the instructions to confirm repair. Deal with any other faults. Clear the stored faults. Switch off the ignition and wait for an end of dialogue to confirm the clearance.

GETtheMANUALS.org

NOTES	Only carry out a conformity check after a **complete check** with the **diagnostic tool**. The values indicated in this conformity check are given as examples. **Application conditions:** Engine stopped, **ignition on**.

MAIN SCREEN

Order	Function	Parameter or Status checked or Action		Display and Notes	Fault finding
1	**Battery voltage**	**ET001:**	+ After ignition computer feed	**PRESENT**	Check the battery voltage and the charging circuit.
		PR071:	Computer feed voltage	**11.8 V < X < 13.8 V**	
2	**Engine**	**PR145:**	Engine speed	**0 rpm**	In the event of a fault, consult the interpretation of fault **DF154 Engine speed sensor circuit**.
3	**Vehicle speed**	**PR155:**	Vehicle speed	**0 mph**	If there is a fault, refer to the interpretation for fault **DF090 Vehicle speed sensor circuit**.

GETtheMANUALS.org

NOTES	Only check conformity after a **full check** with the diagnostic tool. The values indicated in this conformity check are given as examples. **Application conditions:** Engine stopped, **ignition on**.

ENGINE MANAGEMENT FUNCTION

Sub-function: Air circulation (turbocharging/inlet)

Order	Function	Parameter or Status checked or Action		Display and Notes	Fault finding
1	Atmospheric pressure sensor	**PR079:**	Atmospheric pressure sensor voltage	**4.85 V ± 0.05 V**	In the event of a fault, consult the interpretation of fault **DF200 Atmospheric pressure sensor**.
2	Air temperature sensor	**PR058:**	Air temperature	**X = Temperature under bonnet ± 3 ˚C**	In the event of a fault, consult the interpretation of fault **DF002 Air temperature sensor circuit**.
	Coolant temperature sensor	**PR064:**	Coolant temperature	**X = Coolant temperature ± 3 ˚C**	In the event of a fault, refer to the interpretation of **DF001 Coolant temperature sensor circuit**.
3	Flow sensor	**PR146:**	Inlet air flow	**0 g/s**	In the event of a fault, consult the interpretation of parameter **DF056 Air flow sensor circuit**.

GETtheMANUALS.org

NOTES	Only check conformity after a **full check** with the diagnostic tool. The values indicated in this conformity check are given as examples. **Application conditions:** Engine stopped, **ignition on**.

Sub-function: fuel circuit

Order	Function	Parameter or Status checked or Action		Display and Notes	Fault finding
1	Idling speed regulation	**ET054:**	Idling speed regulation	**INACTIVE**	In the event of a fault (no load not recognised), refer to interpretation of faults **DF008 Pedal potentiometer circuit gang 1** and **DF009 Pedal potentiometer circuit gang 2**.
2		**PR190:**	engine idling speed setpoint	**800 rpm ± 25 rpm**	
3	Richness regulation	**PR546:**	row 1 richness regulation	**100%**	In the event of a fault, refer to interpretation of faults **DF448 Upstream oxygen sensor no. 1, DF449 Upstream oxygen sensor no. 2, DF450 Downstream oxygen sensor no. 1 and DF451 Downstream oxygen sensor no. 2**.
		PR547:	row 2 richness regulation	**100%**	
		PR550:	row 1 richness regulation adaptive program	**100%**	
		PR551:	row 2 richness regulation adaptive program	**100%**	
4	Duration of injection	**PR619:**	duration of injection row 1	**2 ms ± 0.1 ms (reference values)**	
		PR620:	duration of injection row 2	**2 ms ± 0.1 ms (reference values)**	
5	Fuel pump	**AC015:**	fuel pump relay	The pump should be heard operating.	In the event of a fault, refer to interpretation of fault **DF085 Fuel pump relay control circuit**.

GETtheMANUALS.org

NOTES	Only check conformity after a **full check** with the diagnostic tool. The values indicated in this conformity check are given as examples. **Application conditions:** Engine stopped, **ignition on**.

Sub-function: driver parameters

Order	Function	Parameter or Status checked or Action		Display and Notes	Fault finding
1	Throttle position	**ET051:**	programming throttle stops	**PERFORMED**	In the event of a fault, consult the interpretation of **DF487 Throttle stop programming**.
		PR539:	measured throttle voltage gang 1	**0.5 V < X < 0.72 V**	In the event of a fault, consult interpretation of faults **DF328 Throttle potentiometer circuit, DF413 Motorised throttle, DF479 Throttle valve servo and DF508 Motorised throttle control**.
		PR538:	measured throttle voltage gang 2	**0.5 V < X < 0.72 V**	
		PR568:	pedal position gang 1	**X < 2%**	
		PR569:	pedal position gang 2	**X < 2%**	
		PR429:	measured throttle position	**X < 2%**	
		AC193:	variable inlet solenoid valve	The variable inlet solenoid valve should operate.	

GETtheMANUALS.org

NOTES	Only check conformity after a **full check** with the diagnostic tool. The values indicated in this conformity check are given as examples. **Application conditions:** Engine stopped, **ignition on**.

Sub-function: ignition/preheating

Order	Function	Parameter or Status checked or Action	Display and Notes	Fault finding
1	Richness regulation	**ET533:** upstream oxygen sensor no. 1 heating	**INACTIVE**	In the event of a fault, consult faults **DF466 Upstream oxygen sensor no. 1 heating, DF467 Upstream oxygen sensor no. 2 heating, DF468 Downstream oxygen sensor no. 1 heating and DF469 Downstream oxygen sensor no. 2 heating**.
		ET534: upstream oxygen sensor no. 2 heating	**INACTIVE**	
		ET535: downstream oxygen sensor no. 1 heating	**INACTIVE**	
		ET536: downstream oxygen sensor no. 2 heating	**INACTIVE**	
		PR580: upstream oxygen sensor no. 1	**20 mV < X < 800 mV**	In the event of a fault, consult faults **DF448 Upstream oxygen sensor no. 1, DF449 Upstream oxygen sensor no. 2, DF450 Downstream oxygen sensor no. 1 and DF451 Downstream oxygen sensor no. 2**.
		PR582: upstream oxygen sensor no. 2	**20 mV < X < 800 mV**	
		PR581: downstream oxygen sensor no. 1	**20 mV < X < 800 mV**	
		PR583: downstream oxygen sensor no. 2	**20 mV < X < 800 mV**	
		AC176: downstream oxygen sensor heaters	The sensors must be supplied by the heating circuit and heater.	In the event of a fault, consult faults **DF468 Downstream oxygen sensor no. 1 heating** and **DF469 Downstream oxygen sensor no. 2 heating**.

GETtheMANUALS.org

NOTES	Only check conformity after a **full check** with the diagnostic tool. The values indicated in this conformity check are given as examples. **Application conditions:** Engine stopped, **ignition on**.

Sub-function: emission control/OBD

Order	Function	Parameter or Status checked or Action		Display and Notes	Fault finding
1	**Richness regulation**	**ET348:**	sensor fault finding complete	**YES** **NO**	In the event of a fault, consult faults **DF448 Upstream oxygen sensor no. 1, DF449 Upstream oxygen sensor no. 2, DF450 Downstream oxygen sensor no. 1 and DF451 Downstream oxygen sensor no. 2**.
		ET533:	upstream oxygen sensor no. 1 heating	**INACTIVE**	In the event of a fault, consult faults **DF466 Upstream oxygen sensor no. 1 heating, DF467 Upstream oxygen sensor no. 2 heating, DF468 Downstream oxygen sensor no. 1 heating and DF469 Downstream oxygen sensor no. 2 heating**.
		ET534:	upstream oxygen sensor no. 2 heating	**INACTIVE**	
		ET535:	downstream oxygen sensor no. 1 heating	**INACTIVE**	
		ET536:	downstream oxygen sensor no. 2 heating	**INACTIVE**	
		ET541:	O2 sensor heating OBD fault finding	**DONE** **NOT DONE**	
2	**Fuel vapour absorber**	**ET540:**	canister bleed OBD fault finding	**DONE** **NOT DONE**	In the event of a fault, consult **DF536 Canister solenoid valve control circuit**.
		ET050:	canister bleed control	**ACTIVE** **INACTIVE**	
		PR102:	canister bleed solenoid valve OCR	**X < 0.5%**	

GETtheMANUALS.org

NOTES	Only check conformity after a **full check** with the diagnostic tool. The values indicated in this conformity check are given as examples. **Application conditions:** Engine stopped, **ignition on**.

Sub-function: Cruise control/speed limiter

Order	Function	Parameter or Status checked or Action		Display and Notes	Fault finding
1	**Faults (For Vdiag 10 only)**	**ET683:**	Fault on the 2 cruise control/ speed limiter brake contacts	**ABSENT PRESENT STORED**	In the event of a fault, consult the interpretation of fault **DF611 Fault on the 2 cruise control/ speed limiter brake contacts**.
		ET684:	Fault on one of the 2 cruise control/ speed limiter brake contacts	**ABSENT PRESENT STORED**	In the event of a fault, consult the interpretation of fault **DF610 Fault on one of the 2 cruise control/speed limiter brake contacts**.
		ET685:	Fault on cruise control or speed limiter button	**ABSENT PRESENT STORED**	In the event of a fault, consult the interpretation of fault **DF502 Cruise control/speed limiter button**.
		ET686:	Fault on cruise control/speed limiter selector switches on steering wheel	**ABSENT PRESENT STORED**	In the event of a fault, apply the interpretation of fault **DF106 cruise control/speed limiter selector function on the steering wheel**.
2	**Battery voltage**	**ET001:**	computer + after ignition feed	**PRESENT**	Check the battery voltage and the charging circuit.
3	**Cruise control/ speed limiter**	**ET042:**	cruise control/ speed limiter	**INACTIVE**	In the event of a fault, refer to the interpretation of status **ET042 Cruise control/speed limiter**.
4		**ET413:**	cruise control/ speed limiter function	**INCREASE DECREASE SUSPEND RESUME**	In the event of a fault, consult the interpretation of status **ET413 Cruise control/speed limiter function**.

GETtheMANUALS.org

NOTES	Only check conformity after a **full check** with the diagnostic tool. The values indicated in this conformity check are given as examples. **Application conditions:** Engine stopped, **ignition on**.

Sub-function: Cruise control/speed limiter (CONTINUED 1)

Order	Function	Parameter or Status checked or Action		Display and Notes	Fault finding
5	**Cruise control/ speed limiter (Except Vdiag 10)**	**ET415:**	Cruise control/ speed limiter deactivation	**STATUS 1:** Traction control request **STATUS 2:** Brake pedal depressed **STATUS 3:** Cruise control or speed limiter fault **STATUS 5:** Fault detected by injection computer **STATUS 6:** Vehicle speed invalid **STATUS 7:** Gear lever in neutral position **STATUS 8:** Vehicle speed invalid **STATUS 9:** Cancel button pressed **STATUS 4:** Engine-gearbox decoupling	**NONE**

GETtheMANUALS.org

NOTES	Only check conformity after a **full check** with the diagnostic tool. The values indicated in this conformity check are given as examples. **Application conditions:** Engine stopped, **ignition on**.

Sub-function: Cruise control/speed limiter (CONTINUED 2)

Order	Function	Parameter or Status checked or Action		Display and Notes	Fault finding
6	**Cruise control/ speed limiter (For Vdiag 10 only)**	**ET556:**	Driver deactivation of the cruise control/ speed limiter	**STATUS 1** **STATUS 2** **STATUS 3** **STATUS 5** **STATUS 6**	In the event of a fault, apply the interpretation of status **ET556 Driver deactivation of the cruise control/speed limiter**.
7		**ET557:**	deactivation by cruise control/speed limiter function	**STATUS 1** **STATUS 2** **STATUS 3** **STATUS 4**	In the event of a fault, apply interpretation of status **ET557 Deactivation by cruise control/speed limiter function**.
8	**Brake pedal**	**ET237:**	brake pedal	**DEPRESSED** **RELEASED**	In the event of a fault, consult the interpretation for fault **DF411 Brake pedal sensor circuit**.
		ET215:	redundant brake pedal	**DEPRESSED** **RELEASED**	
9	**Gear lever position**	**ET063:**	park/neutral position	**P/N** **NONE**	In the event of a fault, carry out fault finding on the automatic transmission (see **23A, Automatic transmission**).

GETtheMANUALS.org

NOTES	Only check conformity after a **full check** with the diagnostic tool. The values indicated in this conformity check are given as examples. **Application conditions:** Engine stopped, **ignition on**.

Sub-function: Torque management

Order	Function	Parameter or Status checked or Action	Display and Notes	Fault finding
1	**Engine**	**PR145:** engine speed	**0 rpm**	In the event of a fault, consult the interpretation of fault **DF154 Engine speed sensor circuit**.
2	**Battery voltage**	**ET001:** computer + after ignition feed	**PRESENT** **ABSENT**	Check the battery voltage and the charging circuit.
3	**Engine**	**PR192:** engine torque map	**0 Nm**	In the event of a fault, apply the interpretation of fault **DF333 Injection → automatic transmission connection**.

GETtheMANUALS.org

NOTES	Only check conformity after a **full check** with the diagnostic tool. The values indicated in this conformity check are given as examples. **Application conditions:** Engine stopped, **ignition on**.

Sub-function: Cold loop

Order	Function	Parameter or Status checked or Action		Display and Notes	Fault finding
1	**Battery voltage**	**ET001:**	computer + after ignition feed	**PRESENT**	Check the battery voltage and the charging circuit.
2	**Air conditioning**	**ET018:**	climate control request	**YES** **NO**	In the event of a fault, carry out fault finding on the air conditioning system (**62A Air conditioning**).
3	**Cooling**	**ET144:**	high-speed fan unit relay control	**ACTIVE** **INACTIVE**	In the event of a fault, apply the interpretation of status **ET144 High-speed fan unit relay control**.
		ET143:	low-speed fan unit relay control	**ACTIVE** **INACTIVE**	In the event of a fault, apply the interpretation of status **ET143 Low-speed fan unit relay control**.
4	**Air conditioning**	**PR621:**	power authorised by the air conditioning compressor	**0 W**	In the event of a fault, carry out fault finding on the air conditioning system (**62A Air conditioning**).
5	**Cooling**	**AC154:**	low-speed fan assembly	**This command controls the fan unit at low speed.**	In the event of a fault, apply the interpretation of status **ET143 Low-speed fan unit relay control**.
		AC153:	high-speed fan assembly	**This command controls the fan unit at high speed.**	In the event of a fault, apply the interpretation of status **ET144 High-speed fan unit relay control**.

GETtheMANUALS.org

NOTES	Only check conformity after a **full check** with the diagnostic tool. The values indicated in this conformity check are given as examples. **Application conditions:** Engine stopped, **ignition on**.

Sub-function: Heating

Order	Function	Parameter or Status checked or Action		Display and Notes	Fault finding
1	**Cooling**	**PR164:**	coolant temperature	**Below 100 ˚C**	In the event of a fault, refer to the interpretation of **DF001 Coolant temperature sensor circuit**.
		ET538:	heating element management	**ACTIVE** **INACTIVE**	

GETtheMANUALS.org

NOTES	Only check conformity after a **full check** with the diagnostic tool. The values indicated in this conformity check are given as examples. **Application conditions:** Engine stopped, **ignition on**.

Sub-function: Starting

Order	Function	Parameter or Status checked or Action	Display and Notes	Fault finding
1	**Starter motor**	**ET430: Starter relay**	**INACTIVE**	In the event of a fault, carry out fault finding on the UCH (see **87B, Passenger compartment connection unit, Interpretation of faults**).
2	**Battery voltage**	**PR071: Computer feed voltage**	**11.8 V < X < 13.8 V**	Check the battery voltage and the charging circuit.

GETtheMANUALS.org

NOTES	Only check conformity after a **full check** with the diagnostic tool. The values indicated in this conformity check are given as examples. **Application conditions:** Engine stopped, **ignition on**.

Sub-function: Protection

Order	Function	Parameter or Status checked or Action		Display and Notes	Fault finding
1	**Engine immobiliser**	**ET003:**	engine immobiliser	**ACTIVE** **INACTIVE**	If ACTIVE, refer to section **87B Connection unit**.
		ET341:	immobiliser code programmed	**YES** **NO**	If NO, refer to section **87B Connection unit**.
		ET077:	impact detected	**YES** **NO**	If YES, switch off the ignition for 10 seconds, then switch it back on so the engine can be restarted. Then clear any faults.

GETtheMANUALS.org

Tool status	Diagnostic tool title
ET001	Computer + after ignition feed
ET003	Engine immobiliser
ET004	Air conditioning authorisation
ET018	Air conditioning request
ET038	Engine
ET042	Cruise control/speed limiter
ET050	Canister bleed control
ET051	Throttle stop programming
ET054	Idle speed regulation
ET063	Park/Neutral position
ET077	Impact detected
ET143	Low speed fan assembly relay control
ET144	High-speed fan assembly relay control
ET215	Redundant brake pedal
ET219	Fast idle speed
ET236	Heated windscreen
ET237	Brake pedal
ET278	Throttle position: no load
ET297	Power-assisted steering pressure switch
ET341	Immobiliser code programmed
ET348	Sensor fault finding complete
ET351	Injection → electronic stability program connection
ET395	Catalytic converter OBD fault finding: DONE

GETtheMANUALS.org

Tool status	Diagnostic tool title
ET413	Cruise control/speed limiter function
ET415	Cruise control/speed limiter deactivation
ET425	Heated rear screen
ET430	Starter relay
ET533	Upstream oxygen sensor no. 1 heating
ET534	Upstream oxygen sensor no. 2 heating
ET535	Downstream oxygen sensor no. 1 heating
ET536	Downstream oxygen sensor no. 2 heating
ET538	Heating element management
ET540	Canister bleed OBD fault finding
ET541	Oxygen sensor heating OBD fault finding
ET556	Driver deactivation of the cruise control/speed limiter
ET557	Deactivation of cruise control/speed limiter by cruise control/speed limiter function
ET683	Fault on the 2 cruise control/speed limiter brake contacts
ET684	Fault on one of the 2 cruise control/speed limiter brake contacts
ET685	Fault on cruise control or speed limiter button
ET686	Fault on cruise control/speed limiter selector switches on steering wheel
ET802	Air path programming

GETtheMANUALS.org

ET042	CRUISE CONTROL/SPEED LIMITER

NOTES	**Special note:** Only perform these tests if the statuses do not correspond with the system programming functions.

CRUISE CONTROL

Status **ET042** changes to "**CRUISE CONTROL**" when the **cruise control activation button** is pressed. This button is situated on the instrument panel, or on the centre console of the vehicle.
A **green** instrument panel warning light comes on when status **ET042** is at "**CRUISE CONTROL**".
If status **ET042** does not change to "**CRUISE CONTROL**", check the "**ON/OFF**" button of the cruise control, and the condition of its connector.
Repair if necessary.
Check **for continuity and make sure there is no interference resistance** on the following connection:

Track 30, injection computer connector A ⟶ **track A3** of the 6-track connector Cruise control start/stop button

Repair if necessary.

SPEED LIMITER

Status **ET042** changes to "**CRUISE CONTROL**" when the **cruise control activation button** is pressed. This button is situated on the instrument panel, or on the centre console of the vehicle.
A **yellow** instrument panel warning light comes on when status **ET042** is "**SPEED LIMITING**".
If status **ET042** does not change to "**CRUISE CONTROL**", check the "**ON/OFF**" button of the cruise control, and the condition of its connector.
Repair if necessary.
Check **for continuity and make sure there is no interference resistance** on the following connection:

Track 29, injection computer connector A ⟶ **track B1** of the 6-track connector Cruise control start/stop button

Repair if necessary.

AFTER REPAIR	Repeat the conformity check from the start.

GETtheMANUALS.org

ET143	LOW-SPEED FAN UNIT RELAY CONTROL

NOTES	There should be no fault detected on the coolant temperature sensor circuit when this fault finding procedure is being carried out.

Check:
– condition of the low-speed fan unit,
– that the low-speed fan resistance is correct,
– cleanness of the low-speed fan earth,
– low-speed fan feed,
  – feed line between the low-speed fan and the low-speed fan relay.

Repair if necessary.

Check **the connection and condition of the low-speed fan unit relay connector**.
Replace the connector if necessary.

Disconnect the low-speed fan relay. With the ignition on, check for the presence of **+ 12 V on track 1 of the relay**.
Repair if necessary.

Check the **continuity of the relay coil**.
Replace the low-speed fan relay if necessary.

Connect the bornier in place of the computer and check the **insulation, continuity and the absence of interference resistance** on the connection between:

Track 64, injection computer connector A ⟶ **Low-speed fan relay**

Repair if necessary.

AFTER REPAIR	Repeat the conformity check from the start.

GETtheMANUALS.org

ET144	HIGH-SPEED FAN UNIT RELAY CONTROL

NOTES	There should be no fault detected on the coolant temperature sensor circuit when this fault finding procedure is being carried out.

Check:
– condition of the high-speed fan unit,
– that the high-speed fan resistance is correct,
– cleanness of the high-speed fan earth,
– high-speed fan feed,
  – feed line between the high-speed fan and the high-speed fan relay.

Repair if necessary.

Check **the connection and condition of the high-speed fan unit relay connector**.
Replace the connector if necessary.

Disconnect the high-speed fan relay. With the ignition on, check for the presence of **+ 12 V on track 1 of the relay**.
Repair if necessary.

Check the **continuity of the relay coil**.
Replace the high-speed fan relay if necessary.

Connect the bornier in place of the computer and check the **insulation, continuity and the absence of interference resistance** on the connection between:

Track 64, injection computer connector A ⟶ **High-speed fan relay**

Repair if necessary.

AFTER REPAIR	Repeat the conformity check from the start.

GETtheMANUALS.org

ET413	CRUISE CONTROL/SPEED LIMITER FUNCTION

NOTES	**Special notes:** Apply the conformity check to see if the statuses are consistent with the operating programs of the system.

INCREASE

Status **ET413** changes to "**INCREASE**" when the "**+**" button for the cruise control is pressed.
This button is situated to the left of the steering wheel.
If status **ET413** does not change to "**INCREASE**", check the condition of the "±" cruise control button and its connector. Repair if necessary.
To be able to remove the driver's airbag and carry out the measures in complete safety (see 88C, Airbag and pretensioners).
Repair if necessary.

Measure **the resistance of the following connection, after pressing the "+" button**:

Track 55, injection computer connector A ⟶ **Track** A1 "±" button

If the resistance is not approximately **300 Ω**, check the continuity of the connection when the button is not pressed.
If there is continuity, replace the "±" control button.
If the connection is broken, repair it.

DECREASE

Status **ET413** changes to "**DECREASE**" when the cruise control "**-**" button is pressed.
This button is situated to the left of the steering wheel.
If status **ET413** does not change to "**DECREASE**", check the condition of the "**±**" cruise control button and its connector. Repair if necessary.
To be able to remove the driver's airbag and carry out the measures in complete safety (see 88C, Airbag and pretensioners).
Repair if necessary.

Measure **the resistance of the following connection after pressing the "-" button**:

Track 55, injection computer connector A ⟶ **Track** A2 "±" button

If the resistance is not approximately **100 Ω**, check the continuity of the connection when the button is not pressed.
If there is continuity, replace the "**±**" control button.
If the connection is broken, repair it.

AFTER REPAIR	Repeat the conformity check from the start.

GETtheMANUALS.org

ET413 **CONTINUED**	

SUSPEND	Status **ET413** changes to "SUSPEND" when the "**0**" cruise control button is pressed. This button is situated to the right of the steering wheel. If status **ET413** does not change to "SUSPEND", check the condition of the "**R/0**" cruise control button and its connector. Repair if necessary. **Refer to the airbag Technical Note associated with the vehicle, in order to remove the driver's airbag, and carry work out safely.** Repair if necessary. Measure the **resistance of the following connection, after pressing the "0" button**: **Track 55**, injection computer connector A ⟶ **Track A2,** "**R/0**" button If the resistance is not approximately **0 Ω**, replace the "**R/0**" control button. If the connection is broken, repair it.

RESUME	Status **ET413** changes to "RESUME" when the "**R**" cruise control button is pressed. This button is situated to the right of the steering wheel. If status **ET413** does not change to "RESUME", check the condition of the "**R/0**" cruise control button and its connector. Repair if necessary. **Refer to the airbag fault finding note associated with the vehicle, in order to remove the driver's airbag, and carry work out safely.** Repair if necessary. Measure the **resistance of the following connection, after pressing the "R" button**: **Track 55**, injection computer connector A ⟶ **Track A2,** "**R/0**" button If the resistance is not approximately **900 Ω**, check the continuity of the connection when the button is not pressed. If there is continuity, then replace the "**R/0**" control button. If the connection is broken, repair it.

AFTER REPAIR	Repeat the conformity check from the start.

GETtheMANUALS.org

ET556	DRIVER DEACTIVATION OF THE CRUISE CONTROL/SPEED LIMITER

NOTES	**Special notes:** Apply the conformity check to see if the statuses are consistent with the operating programs of the system.

Note:
Cruise control can be activated when the vehicle speed exceeds **18 mph (30 km/h)**. Status **ET556** details 6 causes for cruise control deactivation.
NOTE
To reinitialise the deactivations stored by the injection computer, use command RZ007 "Fault memory".

STATUS 1	**Brake pedal depressed**
	The cruise control function is deactivated each time the brake pedal is depressed. Status **ET556** changes to "**STATUS 1**", when driving, with cruise control active and the brake pedal depressed. If status **ET556** changes to "**STATUS 1**" without depressing the brake pedal, refer to interpretation of fault **DF411 "Brake pedal sensor circuit**".

STATUS 2	**Traction control request**
	If the vehicle being diagnosed is fitted with traction control, the cruise control function is deactivated each time traction control is selected. Status **ET556** changes to "**STATUS 2**", when driving, with cruise control active and traction control requested. If status **ET556** changes to "**STATUS 2**" without traction control request, refer to fault finding note relating to the vehicle's traction control system.

STATUS 3	**Suspend button pressed**
	Status **ET556** changes to "**STATUS 3**" when driving, with Cruise control/Speed limiter active, if the driver presses the "**0**" button on the Cruise control/Speed limiter. If status **ET556** changes to "**STATUS 3**" without pressing the "**0**" button on the Cruise control/Speed limiter, consult the interpretation of status **ET413 "Cruise control/speed limiter function**" and run fault finding on the "**R/0**" control button of the Cruise control/ Speed limiter.

AFTER REPAIR	Repeat the conformity check from the start.

GETtheMANUALS.org

ET556 CONTINUED	

STATUS 5	**Gear lever in neutral position**
	Status **ET556** changes to "**STATUS 5**", when driving, with cruise control active and – if gear lever is in neutral on an automatic transmission. This deactivates cruise control. If status **ET556** changes to "**STATUS 5**" or out of neutral on an automatic transmission, contact the Techline.

STATUS 6	**Inconsistency between the request and the vehicle speed**
	Status **ET556** changes to "**STATUS 6**" if the computer detects too great a difference between the speed requested by the driver and the vehicle speed. This may occur when driving, with cruise control active and where the difference between speeds is great. If status **ET556** changes to "**STATUS 6**" without a great difference in the speeds, contact the Techline.

AFTER REPAIR	Repeat the conformity check from the start.

GETtheMANUALS.org

ET557	CRUISE CONTROL/SPEED LIMITER DEACTIVATION BY FUNCTION

NOTES	**Special notes:** Apply the conformity check to see if the statuses are consistent with the operating programs of the system.

Note:
Cruise control remains deactivated as long as the vehicle speed does not exceed **18 mph (30 km/h).** Status **ET557** details 4 causes for cruise control deactivation.
NOTE
To reinitialise the deactivations stored by the injection computer, use command RZ007 "Fault memory".

STATUS 1	**Cruise control or speed limiter fault**
	If status **ET557** is "**STATUS 1**", refer to the interpretation of status **ET042** "**Cruise control/speed limiter**" and **ET413** "**Cruise control/speed limiter function**", to test the components of the cruise control system and find the faulty one. If status **ET557** changes to "**STATUS 1**", deal with the faults present or stored in the computer. If the fault is still present, contact the Techline.

STATUS 2	**Fault detected by the injection computer**
	Status **ET557** changes to "**STATUS 2**" if the injection computer detects a fault on the injection system: – **faults in the engine speed sensor or camshaft,** – **accelerator pedal faults,** – **engine speed lower than 1000 rpm,** – **engine speed greater than 4700 rpm.** Carry out a multiplex network test, then an injection system test, and carry out fault finding on any faults. If the fault is still present, contact the Techline.

AFTER REPAIR	Repeat the conformity check from the start.

GETtheMANUALS.org

ET557 CONTINUED	

STATUS 3	**Invalid vehicle speed**
	Status **ET557** changes to "**STATUS 3**" if the vehicle speed received by the computer is invalid. Carry out fault finding on the **ABS** computer. If faults are present (see **38C, Anti-lock braking system).** If the fault is still present, contact the Techline.

STATUS 4	**Automatic transmission in defect mode.**
	Status **ET557** changes to "**STATUS 4**" if there is a fault in the automatic transmission system. Carry out fault finding on the **automatic transmission** computer. If there are faults (**see 23A, Automatic transmission**). If the fault is still present, contact the Techline.

AFTER REPAIR	Repeat the conformity check from the start.

GETtheMANUALS.org

Tool parameter	Diagnostic tool title
PR058	Air temperature
PR064	Coolant temperature
PR071	Computer supply voltage
PR079	Atmospheric pressure sensor voltage
PR102	Canister bleed solenoid valve OCR
PR145	Engine speed
PR146	Inlet air flow
PR155	Vehicle speed
PR190	Engine idle speed set value
PR192	Engine torque map
PR429	Measured throttle position
PR448	Ignition advance
PR491	Measured pedal position
PR538	Measured throttle voltage, gang 2
PR539	Measured throttle voltage, gang 1
PR546	Row 1 richness regulation
PR547	Row 2 richness regulation
PR550	Row 1 richness regulation adaptive program
PR551	Row 2 richness regulation adaptive program
PR554	Engine load
PR568	Pedal position gang 1
PR569	Pedal position gang 2
PR580	Upstream oxygen sensor No.1

GETtheMANUALS.org

Tool parameter	Diagnostic tool title
PR581	Downstream oxygen sensor No.1
PR582	Upstream oxygen sensor No.1
PR583	Downstream oxygen sensor No.1
PR612	Position of camshaft d row 1
PR613	Position of camshaft g row 2
PR615	Camshaft offset row 1
PR616	Camshaft offset row 2
PR617	Camshaft offset set value row 1
PR618	Camshaft offset set value row 2
PR619	Duration of injection row 1
PR620	Duration of injection row 2
PR621	Power authorised by the air conditioning compressor

GETtheMANUALS.org

Tool command	Diagnostic tool title
AC015	Fuel pump relay
AC153	High-speed fan assembly
AC154	Low-speed fan assembly
AC176	Downstream oxygen sensor heating
AC193	Variable inlet solenoid valve
VP007	Decrease idling speed
VP011	Increase idling speed
VP020	Write VIN
VP070	Program air path
RZ007	Fault memory
RZ019	Reinitialise programming
RZ032	Program air path

GETtheMANUALS.org

AC015	FUEL PUMP RELAY

NOTES	Malfunctioning of the fuel pump relay could lead to the appearance of faults relating to the injectors and the fuel vapour absorber bleed solenoid valve.

Check the **condition and connection** of the fuel pump relay connector. Repair if necessary.
Check the continuity of the fuel pump relay **control coil**. Replace the relay if necessary.
Check for **12 V** on **track 3** of the fuel pump relay connector. Repair the wiring up to the fuse if necessary.
With the ignition switched on, check **for 12 V** on **track 2** of the fuel pump relay connector. Repair the wiring up to the fuse if necessary.
Check **the continuity and insulation** of the following connections: **Injection computer, connector B, track 96** → **Fuel pump relay track 1** **Petrol pump** → **Fuel pump relay track 5** Repair if necessary.
If the fault persists, change the petrol pump.

AFTER REPAIR	Carry out another fault finding check on the system.

GETtheMANUALS.org

NOTES	Only refer to these customer complaints after performing a complete check with the diagnostic tool.

NO DIALOGUE WITH THE COMPUTER	→ **ALP 1**
STARTING FAULTS	→ **ALP 2**
IDLING SPEED FAULTS	→ **ALP 3**
FAULTS WHILE DRIVING	→ **ALP 4**

GETtheMANUALS.org

ALP 1	No dialogue with the computer

NOTES	Check the battery voltage.

Ensure that the diagnostic tool is not the cause of the fault by using it to establish dialogue with a computer on another vehicle.
Check the connection between the diagnostic tool and the diagnostic socket (condition of the lead).
Check the injection, engine and passenger compartment fuses.
Repair if necessary.

Check for **+ 12 V** on **track 16** and for **an earth** on tracks **4** and **5** of the diagnostic socket.
Repair if necessary.

Use the bornier to check the **insulation, continuity and the absence of interference resistance** on the following **connections**:

Track 2 injection computer connector A	→	**Earth**
Track 4, injection computer connector A	→	**Earth**
Injection computer, connector B, track 115	→	**Earth**
Injection computer, connector B, track 116	→	**Earth**
Injection computer, connector B, track 118	→	**Earth**
Injection computer, connector B, track 121	→	**Earth**
Track 14, injection computer connector A	→	**Track 7 diagnostic socket**
Track 9, injection computer connector A	→	**+ After ignition**
Injection computer, connector B, track 113	→	**Fuse**
Track 44, injection computer connector A	→	**Main relay**
Injection computer, connector B, track 117	→	**Main relay**
Injection computer, connector B, track 119	→	**Main relay**
Injection computer, connector B, track 120	→	**Main relay**

Check the resistance and operation of the main relay control coil.
Replace the relay if necessary.

AFTER REPAIR	Carry out a complete check with the diagnostic tool.

GETtheMANUALS.org

ALP 2	Starting faults

NOTES	Only check the customer complaint after performing a **complete check with the diagnostic tool**.

Check the reliability of the starter motor.
Check that there is fuel present (the fuel gauge may be faulty). Check that the fuel is of the correct type.
Check that no hoses are pinched (especially after a removal operation). Check the condition of the fuel filter. Check the condition of the tank. Check that the tank vent is not blocked.
Check the petrol pump electrical supply. Check that the impact sensor is operating correctly.
Check the idle speed regulation valve. Tap gently to release the valve.
Disconnect the pipe connecting the canister bleed solenoid valve to the inlet manifold. Plug the pipe to prevent an air leak. If there is no longer any disturbance, the canister bleed is at fault.
Check condition of spark plugs and ignition coils. Check that these elements are correct for the vehicle.
Check that the exhaust system is not blocked and that the catalytic converters are not clogged.
Check the engine compressions.
Check the condition of the flywheel.
Check the timing gear setting.

AFTER REPAIR	Carry out a complete check with the diagnostic tool.

GETtheMANUALS.org

ALP 3	Idle speed faults

NOTES	Only check the customer complaint after performing a **complete check with the diagnostic tool**.

Check that there is fuel present (the fuel gauge may be faulty). Check that the fuel is of the correct type.
Check that no hoses are pinched (especially after a removal operation). Check the condition of the fuel filter. Check the condition of the tank. Check that the tank fresh air vent is not blocked.
Check that no hoses are pinched (especially after a removal operation). Check the condition of the fuel filter. Check the condition of the tank. Check that the tank vent is not blocked.
Check the connection and condition of the idle speed regulation stepper motor connector. Replace the connector if necessary.
Check the idle speed regulation valve. Tap gently to release the valve.
Check that the camshaft dephaser solenoid valves are not jammed in the open position.
Disconnect the pipe connecting the canister bleed solenoid valve to the inlet manifold. Plug the pipe to prevent an air leak. If there is no longer any disturbance, the canister bleed is at fault.
Check condition of spark plugs and ignition coils. Check that these elements are correct for the vehicle.

AFTER REPAIR	Carry out a complete check with the diagnostic tool.

GETtheMANUALS.org

ALP 4	Faults when driving

NOTES	Only check the customer complaint after performing a **complete check with the diagnostic tool**.

Check that there is fuel present (the fuel gauge may be faulty). Check that the fuel is of the correct type.
Check that no hoses are pinched (especially after a removal operation). Check the condition of the fuel filter. Check the condition of the tank. Check that the tank fresh air vent is not blocked.
Check that no hoses are pinched (especially after a removal operation). Check the condition of the fuel filter. Check the condition of the tank. Check that the tank vent is not blocked.
Check the connection and condition of the idle speed regulation stepper motor connector. Replace the connector if necessary.
Check the idle speed regulation valve. Tap gently to release the valve.
Check that the camshaft dephaser solenoid valves are not jammed in the open position.
Disconnect the pipe connecting the canister bleed solenoid valve to the inlet manifold. Plug the pipe to prevent an air leak. If there is no longer any disturbance, the canister bleed is at fault.
Check condition of spark plugs and ignition coils. Check that these elements are correct for the vehicle.

AFTER REPAIR	Carry out a complete check with the diagnostic tool.

GETtheMANUALS.org

VEL SATIS

2 Transmission

20A CLUTCH

Clutch - Operation	20A - 2
Hydraulic clutch - Operating diagram	20A - 3
Hydraulic clutch - Tooling and equipment	20A - 4
Hydraulic clutch - Customer complaints	20A - 5
Hydraulic clutch - Fault finding chart	20A - 6

V1 **Edition Anglaise**

"The repair procedures given by the manufacturer in this document are based on the technical specifications current when it was prepared.

The procedures may be modified as a result of changes introduced by the manufacturer in the production of the various component units and accessories from which his vehicles are constructed."

All rights reserved by Renault s.a.s.

Copying or translating, in part or in full, of this document or use of the service part reference numbering system is forbidden without the prior written authority of Renault s.a.s.

© Renault s.a.s.

GETtheMANUALS.org

The clutch is a system which enables mechanical action to be either linked or not to an end component.
It is made up of an assembly of parts located between the engine and the transmission components.
It ensures the following functions:

- **When engaged: transmits the power provided.**
- **When disengaged: this transmission is interrupted.**
- **Between the two positions: the transmission of power is gradually restarted.**

There are different types of clutch:

- **Depending on number of discs:**
  - **dry single disc clutch,**
  - **dry double disc clutch with single control,**
  - **double disc clutch with separate control (double),**
  - **wet or dry multidisc clutch.**

- **Depending on type of control:**
  - **manual control,**
  - **hydraulic control,**
  - **electric control with electronic servo.**

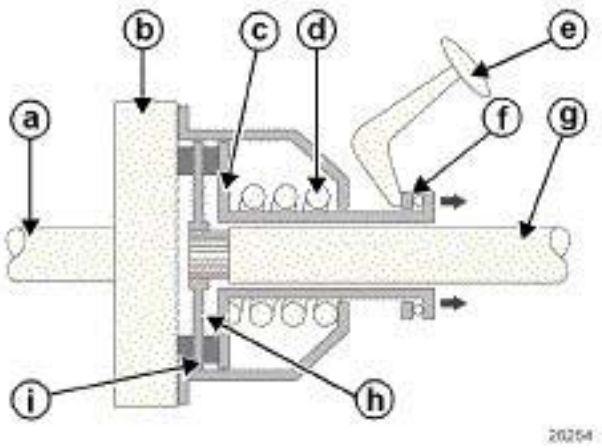

a : crankshaft
b : flywheel
c : pressure plate
d : spring
e : clutch pedal
f : clutch thrust bearing
g : gearbox input shaft
h : clutch plate
i : clutch plate pad

The system is made up of the flywheel (b) (attached to the engine) (the bolts in the centre are screwed into the crankshaft (a)).
The clutch plate is attached to the gearbox.
The outermost part is called the friction or pad. The pressure plate ensures that the clutch plate is held against the flywheel when the clutch is engaged, as this is what ensures that they turn at exactly the same speed, one driving the other.
The pressure plate springs are pushed in by the clutch thrust bearing.
When the clutch control (hydraulic, or cable operated) is activated, the clutch plates move apart and less and less movement is transmitted, leaving the gearbox free of the engine. This, for example, allows the vehicle remain stationary without stalling the engine, or a gear to be changed.
The opposite action involves gradually releasing the clutch control, so that the engine and gearbox are reconnected. This manoeuvre is called "slipping the clutch".

GETtheMANUALS.org

Cross section of the hydraulic system:

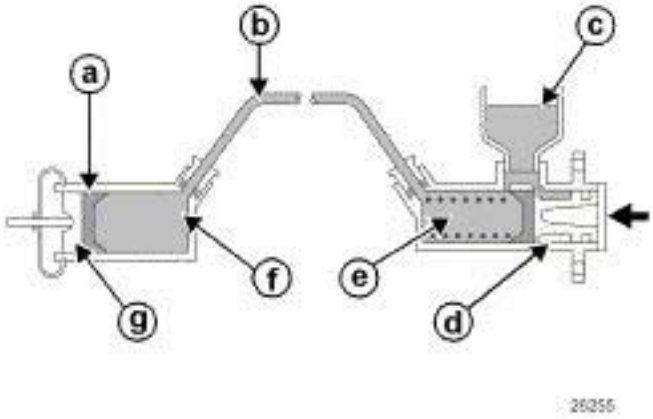

a : seal
b : pipe
c : reservoir
d : piston
e : master cylinder
f : slave cylinder
g : piston

Overall diagram of the hydraulic system:

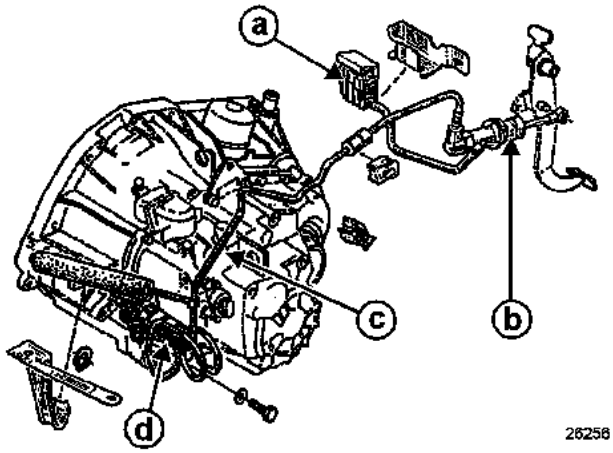

a : hydraulic fluid reservoir
b : master cylinder
c : duct + filter
d : slave cylinder

GETtheMANUALS.org

Standard tooling is used

GETtheMANUALS.org

Customer complaint: the clutch pedal remains depressed after use.

Use the fault finding chart (see next page) in the following cases:

- **The pedal remains depressed, without the vehicle moving, with the engine running or stationary:**
  - **either after making several successive manoeuvres,**
  - **or after leaving the foot down on the pedal using moderate force for a reasonably prolonged period.**

The function temporarily returns to normal after releasing the pedal manually.

- **The pedal remains depressed only after reasonably prolonged use of the vehicle, particularly in heavy traffic.**

The function temporarily returns to normal after releasing the pedal manually.

- **The pedal remains depressed immediately after each manoeuvre. There is little or no force felt from the pedal and returning the pedal manually does not stop the fault from recurring.**

- **After a prolonged stop in the disengaged position, first gear engaged (stop at traffic lights, for example), the vehicle has a tendency to creep forward after a certain amount of time. If the pedal is released, it does not return.**

GETtheMANUALS.org

NOTES	– Check that the customer has not topped up the brake fluid level. – Check the condition of the brake pads before topping up the brake fluid.

Check the area surrounding the pedals, on the passenger compartment side.

Is the floor carpet or another foreign body blocking the travel of the clutch pedal?

YES → Disengage the pedal and check that the customer complaint is no longer present.

NO → Check the return spring and the pushrod for the pedals.

Are there any anomalies?

YES → Repair the anomaly and check that the customer complaint is no longer present.

NO → Check the level of hydraulic fluid

Is the level below the take-off point supplying the master cylinder?

NO → A

YES → Check the sealing of the hydraulic circuit pipes

Are there any leaks around the unions or pipes?

NO → A

YES → Carry out the necessary repairs

NO → A

GETtheMANUALS.org

NOTES	– Check that the customer has not topped up the brake fluid level. – Check the condition of the brake pads before topping up the brake fluid.

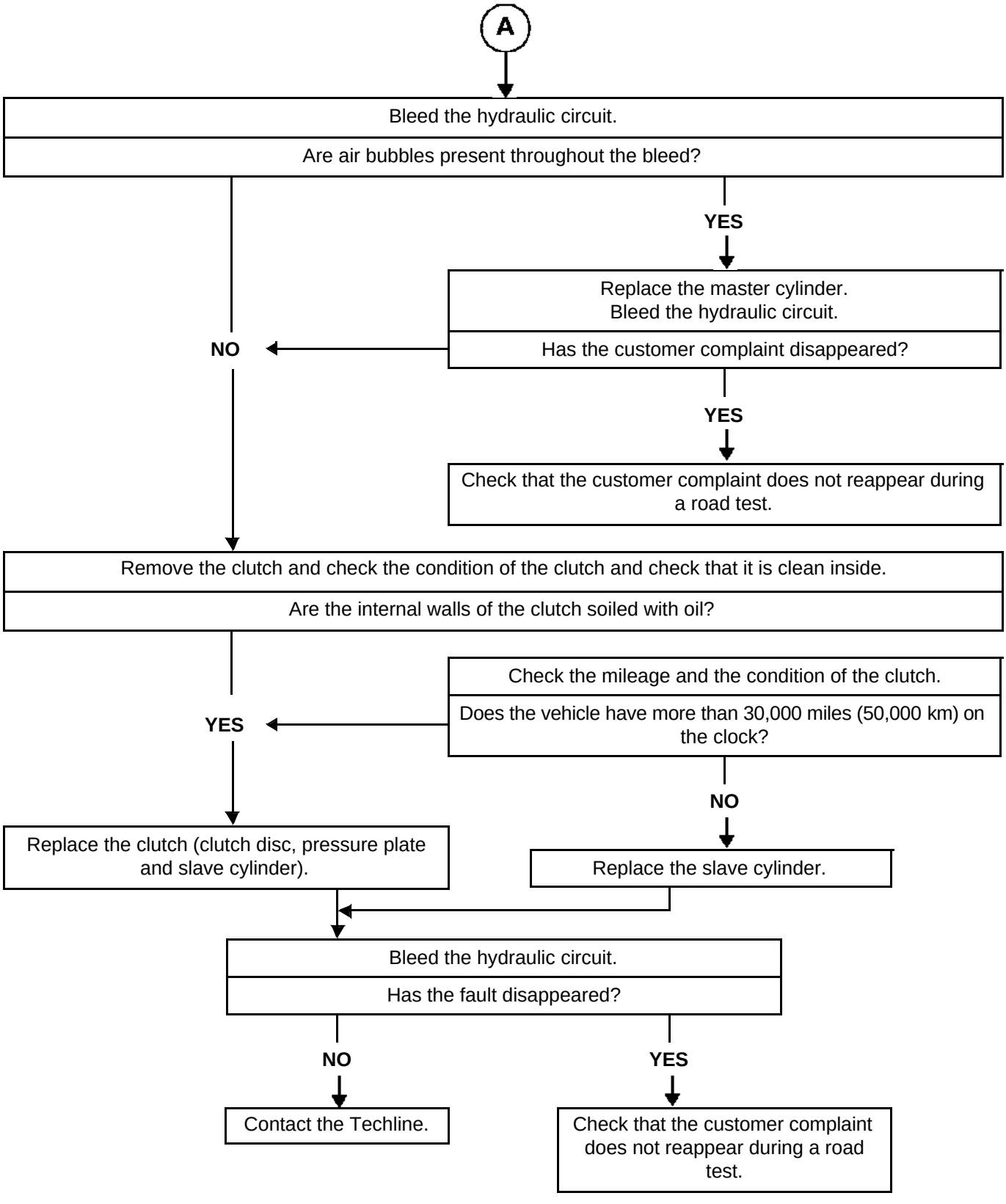

GETtheMANUALS.org

VEL SATIS

3 Chassis

35B TYRE PRESSURE MONITOR

VDIAG NO.: 04

ABBREVIATIONS	35B - 2
Fault finding - Introduction	35B - 3
Fault finding - System operation	35B - 7
Fault finding - Fault summary table	35B - 9
Fault finding - Interpretation of faults	35B - 10
Fault finding - Conformity check	35B - 16
Fault finding - Interpretation of statuses	35B - 20
Fault finding - Interpretation of parameters	35B - 22
Fault finding - Help	35B - 25
Fault finding - Interpretation of commands	35B - 32
Fault finding - Customer complaints	35B - 33
Fault finding - Fault Finding Chart	35B - 35

V4 **Edition Anglaise**

"The repair procedures given by the manufacturer in this document are based on the technical specifications current when it was prepared.

The procedures may be modified as a result of changes introduced by the manufacturer in the production of the various component units and accessories from which his vehicles are constructed."

All rights reserved by Renault s.a.s.

Copying or translating, in part or in full, of this document or use of the service part reference numbering system is forbidden without the prior written authority of Renault s.a.s.

© Renault s.a.s. 2007

GETtheMANUALS.org

ABBREVIATIONS	MEANING OF ABBREVIATION
ABS system	Anti-lock braking system
Fault Finding Chart	Fault Finding Chart
APC	After ignition
AVC	Before ignition feed
BVA	Automatic gearbox
Manual gearbox	Manual gearbox
BVR	Sequential gearbox
CAN	Controller Area Network
AC	Air conditioning
CD	Compact disc
PAS	Power assisted steering (hydraulic)
DAE	Electric power assisted steering
DVD	Digital versatile disc
DTC	Fault finding code
EGR	Exhaust gas recirculation
ESP	Electronic Stability Program
GMV	Fan assembly
CNG	Compressed natural gas
LPG	Liquefied petroleum gas
HLE	High yield strength
MAG	Metal active gas (for welding steel)
MIG	Metal inert gas (for welding aluminium)
MR	Workshop repair manual
TN	Technical Note
OBD	On board diagnostics
SER	Resistance spot welding
SSPP	Tyre pressure monitoring system
THLE	Very high-tensile strength
TM	Labour time
UCH	UCH
UPC	Protection and switching unit
UCT	Roof control unit
UHLE	Ultra high yield strength
VIN	Vehicle identification number

GETtheMANUALS.org

1. SCOPE OF THIS DOCUMENT

This document presents the fault finding procedure applicable to all computers with the following specifications:

Vehicle(s): **Vel Satis**	*Name of computer:* **SSPP**
Function concerned: **Tyre pressure monitor**	*VDIAG No.:* **04**

2. PREREQUISITES FOR FAULT FINDING

Documentation type

Fault finding procedures (this document):
– Assisted fault finding (integrated into **the diagnostic tool**), Dialogys.
– Mechanical Workshop Repair Manual No. 339.

Wiring diagrams:
– Visu-Schéma (CD-ROM), paper.

Type of diagnostic tools

– **CLIP**

Special tooling required

Special tooling required	
Multimeter	
Elé. 1603	**Reference terminal**
Elé. 1607	**Valve exciter**
	Pressure gauge
	Tyre inflation system

GETtheMANUALS.org

3. REMINDERS

Faults are displayed as present or stored (they appeared in a certain context and have since disappeared, or they are still present but cannot be diagnosed in the current context).

The **present** or **stored** status of faults should be taken into consideration when the **diagnostic tool** is used after the + after ignition feed has come on (without operating any system components).

For a **present fault**, apply the procedure described in the **Interpretation of faults** section.

For a **stored fault**, note the faults displayed and apply the **Notes** section.

If the fault is **confirmed** when the notes are applied, the fault is present. Deal with the fault.

If the fault is **not confirmed**, check:
- the electrical lines which correspond to the fault,
- the connectors on these lines (corrosion, bent pins, etc.),
- the resistance of the component detected as defective,
- the condition of the wires (melted or cut insulation, wear).

Conformity check

The aim of the conformity check is to check the statuses and parameters that do not produce a fault display on **the diagnostic tool** when they are inconsistent. Therefore, this stage is used to:
- carry out fault finding on faults that do not have a fault display, and which may correspond to a customer complaint,
- check that the system is operating correctly and that there is no risk of a fault recurring after repair.

The conformity check is a fault finding procedure carried out using the interpretation of statuses and parameters.

If a status does not function normally or a parameter is outside the permitted tolerance values, consult the corresponding fault finding page (see interpretation of statuses and parameters).

Customer complaints - Fault finding chart

If **the diagnostic tool** check is correct, but the customer complaint is still present, it should be dealt with by **customer complaints**.

A summary of the overall procedure to follow is provided on the following page in the form of a flow chart.

GETtheMANUALS.org

4. FAULT FINDING PROCEDURE

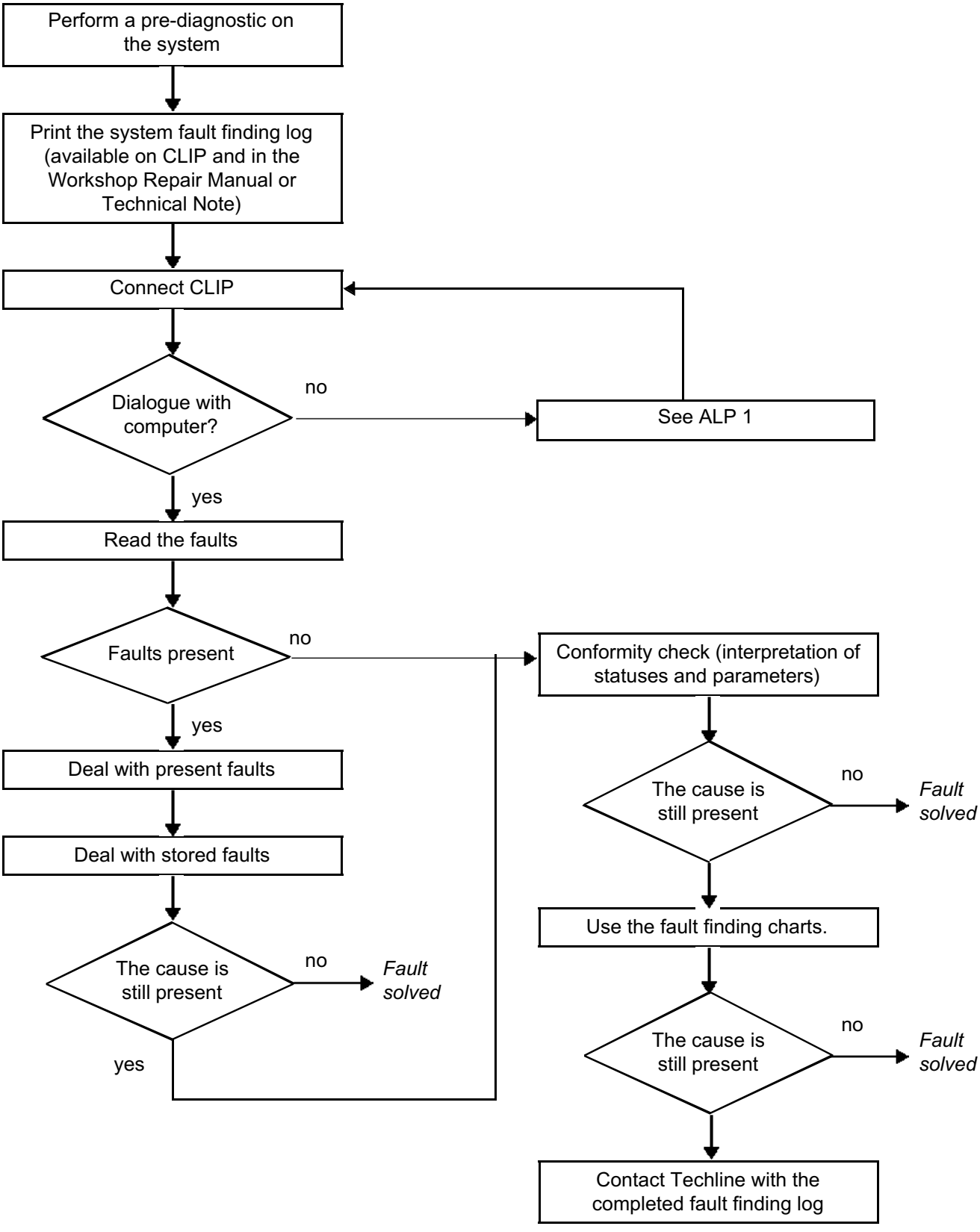

GETtheMANUALS.org

5. FAULT FINDING LOG

IMPORTANT

IMPORTANT
Any fault on a complex system requires thorough fault finding with the appropriate tools. The FAULT FINDING LOG, which should be completed during the procedure, enables you to keep track of the procedure which is carried out. It is an essential document when consulting the manufacturer.

IT IS THEREFORE ESSENTIAL THAT THE FAULT FINDING LOG IS FILLED OUT EVERY TIME IT IS REQUESTED BY TECHLINE OR THE WARRANTY RETURNS DEPARTMENT.

You will always be asked for this report:

- when requesting technical assistance from the Techline.
- For certification requests when replacing parts that must be certified.
- to be attached to monitored parts for which reimbursement is requested. The log is needed for warranty reimbursement, and enables better analysis of the parts removed.

6. SAFETY INSTRUCTIONS

All work on components requires safety rules to be followed to prevent damage or injury:

– Check the battery voltage to avoid incorrect operation of computer functions.
– Use the appropriate tools.

GETtheMANUALS.org

PREDIAGNOSTICS

Steps to take before entering fault finding mode with the tool:

– Are the wheels concerned fitted with SSPP valves, or were they at the time of the incident?
– Check the position of the wheels on the vehicle (valve colour code). If the wheels are not in their original position, return the rings to their original location, then program the valve codes (see **Fault finding - Help**)
– Do the tyre dimensions correspond to the original dimensions of the tyres fitted on the vehicle?
– Check the tyre pressure with a pressure gauge. Do they correspond to the pressures noted on the door or in the driver's handbook for that size of tyres?
– Check that the vehicle is not affected by a Special Technical Operation (wheels flashing on the display).

SYSTEM COMPOSITION

The tyre pressure monitoring system consists of the following components:
– four pressure sensors built into the valves (one per tyre), but not into the spare wheel,
– A specific computer that decodes signals from the sensors, then determines what message to display,
– a display built into the instrument panel or offset on the Carminat screen,
– an underbody aerial (receiver).

SYSTEM OPERATION

– The sensors are activated after approximately **1 minute** of driving above **18 mph (30 km/h)**.
– When the vehicle is being driven, the sensors transmit a signal every minute, but measure every **10 seconds** if the pressure difference between two signals exceeds **84 mbar**.
– The sensors go into standby mode after approximately **2 minutes** at a speed below **18 mph (30 km/h)**.
– In standby mode, the sensors transmit every **60 minutes** unless they detect a pressure difference between two measurements exceeding **84 mbar**, in which case they transmit every **15 minutes**.
– Conditions for accessing programming mode: no special conditions required; the exciter simply has to put the valves into programming mode.
– Condition for exiting programming mode: automatic after a signal from the valve.
– The tyres are considered cold after the vehicle has been stationary for **1 hour and 45 minutes.**
– Alert thresholds:
– overinflation when cold = recommended pressure **+ 700 mbar** during eight cold starts
– overinflation when hot = recommended pressure **+ 850 mbar**
– underinflation = recommended pressure **- 400 mbar** during eight cold starts
– serious underinflation = recommended pressure **- 600 mbar**
– imbalance = difference in pressure between the left-hand and right-hand wheels on the same axle greater than **500 mbar**
– unsuitable pressures for speed warning = at least one wheel's pressure when cold below the recommended high speed pressure **- 400 mbar** and vehicle speed has been above **114 mph (190 km/h)** (as a guide) for at least **3 minutes**.
– The minimum leak detection time is **15 minutes**.
– Information messages given to the driver and warning light (see **Customer complaints**.)
– Command **VP017 Modification of the activation threshold** allows the following modifications to be made:
– change the underinflation threshold of one or more tyres from **300 to 400 mbar** for the user warning display. This command provides more leeway if inflation is a little low when cold. Repeating this command does not change the underinflation threshold again.

GETtheMANUALS.org

WHEEL ROTATION

Each sensor is marked with a different colour: When a valve or tyre is replaced, be sure to use the correct colours:
– green = front left,
– yellow = front right,
– red = rear left,
– black = rear right.
Swapping the wheels without programming the valve codes is prohibited. If the wheels are swapped over on the vehicle, it is essential to replace the valve rings in the locations described above.

WINTER AND SUMMER TYRES

Customers have a choice between two sets of tyres. A **winter** and a **summer set**. The first time the set is changed, the valves must be configured with the diagnostic tool. With that, the SSPP computer has two sets of codes stored, and when the tyres are changed again, the proper set is selected automatically the first time the vehicle is driven. The tyres in each set (summer or winter) must absolutely be installed in the place that matches the valve colour code; if not, reprogram the valve codes and put the coloured rings in the location specified on the label on the driver's door.

Establish dialogue between the SSPP computer and the diagnostic tool (CLIP or NXR).

Connect the cable to the diagnostic socket (it is not necessary to switch on the ignition).

CLIP
Switch on the diagnostic tool.
Select vehicle type and carry out the multiplex network test,
Select the TYRE section,
Follow the fault finding procedure described previously.

GETtheMANUALS.org

Fault	Title
DF003	Front left wheel sensor
DF004	Front right wheel sensor
DF005	Rear right wheel sensor
DF006	Left rear wheel sensor
DF008	Summer set valve codes fault
DF009	Winter set valve codes fault
DF010	Vehicle speed signal
DF014	Tyre Pressure Monitor audible warning
DF015	Programming the valve codes
DF016	Tyre pressure monitor receiver

GETtheMANUALS.org

DF003 **DF004** **DF005** **DF006** **PRESENT** **or** **STORED**	FRONT LEFT-HAND WHEEL VALVE SENSOR FRONT RIGHT-HAND WHEEL VALVE SENSOR REAR RIGHT-HAND WHEEL VALVE SENSOR REAR LEFT-HAND WHEEL VALVE SENSOR 1.DEF: No signal from the valve

NOTES	**Priorities when dealing with a number of faults:** Deal with fault: **DF016 Tyre pressure monitor receiver** first if it is present. **Conditions for carrying out a fault finding test on the fault stored:** If the fault is present after a road test. **Special notes:** Any operations involving valve replacement should not be attempted without full knowledge of the recommendations defined in the Workshop Repair Manual, **section 35**.

1.DEF	***NOTES***	Before any operation, ensure that all the wheels fitted have tyre pressure monitor valves (or that the emergency spare wheel has not been fitted).

The absence of a valve signal may be due to incorrect programming of the valve code or to a faulty valve.

Program the valve concerned (see **Help**). Clear the fault and carry out a road test. If the fault has been rectified, fault finding can end here.

If the fault is still present:

With the valve exciter (MS.1607):
Take a reading of the valve status from the status menu.
– Force the valve to transmit a signal,
– ensure that its status changes to **status 1 Forced transmission**, if it remains at the previous status, change the valve and program in **SC001** (see **Help**).

If not using a valve exciter:
Take a reading of the valve condition in the status menu.
Deflate by > 1 bar and carry out a road test at low speed, i.e. ***V > 18mph (30 km/h)*** *(or wait for 15 minutes)*
– ensure that its status changes to **status 2 Leak**, if it remains at the previous status, change the valve and program in **SC001 Programming a valve code** (see **Help**).

AFTER REPAIR	Deal with any other faults. Clear the stored faults. Switch off the ignition and carry out a road test followed by a check with **the diagnostic tool**.

GETtheMANUALS.org

DF008 **DF009** **STORED**	SUMMER SET VALVE CODES FAULT WINTER SET VALVE CODES FAULT 1.DEF: At least one valve code is missing

NOTES	**Special notes:** Any operations involving changing a valve or removing a tyre should not be attempted without full knowledge of the precautions defined in **section 35** of the Workshop Repair Manual. Before any operation, ensure that all the wheels have tyre pressure monitor valves, and that the emergency spare wheel has not been fitted.

If the SSPP computer has not been programmed with valve codes for one of the two types of wheel sets (winter or summer), this fault is normal and will always be present. If this occurs, the only way to avoid the fault recurring is to program the same valve codes for both sets of wheels.

If the computer recognizes codes for both types of wheel (on the parameter menu), it is because the code has been programmed incorrectly or the wrong set of wheels has been stored in the memory.

Take a reading of the stored wheel types (Summer or Winter) in the statuses menu.

In the parameters menu, take a reading of the valve codes assigned to the stored wheel type.

Program in the four valve codes (see **section: Fault finding - Help**).

If they do not correspond, program the missing or incorrect codes (see **section: Fault finding - Help**).

Carry out a road test to confirm that the fault has been rectified.

AFTER REPAIR	Deal with any other faults. Clear the stored faults. Switch off the ignition and carry out a road test followed by a check with **the diagnostic tool**.

GETtheMANUALS.org

DF010 PRESENT	VEHICLE SPEED SIGNAL 1.DEF: The ABS computer is not sending a speed signal.

NOTES	Carry out a road test to ensure that the speedometer on the instrument panel is working correctly.

If the speed information is displayed on the instrument panel, then:
Check the wiring connection between:

SSPP computer track 14 ⟶ **Instrument panel**

Repair if necessary.

If the speed information is displayed on the instrument panel, then:
Check the wiring connection between:

Instrument panel ⟶ **ABS computer**

Repair if necessary.

If no faults are present on the connection, run a fault finding test on the **ABS**.

Is dialogue re-established with the ABS computer?

YES	Check the vehicle speed signal sent by the ABS computer. Replace the ABS computer if it does not send a signal.
NO	Apply the ABS computer fault finding procedure.

Switch on the ignition and confirm that the fault has been rectified. If it remains, repeat the fault finding procedure from the beginning.

AFTER REPAIR	Deal with any other faults. Clear the stored faults. Switch off the ignition and carry out a road test followed by a check with **the diagnostic tool**.

GETtheMANUALS.org

DF014 PRESENT	TYRE PRESSURE MONITOR WARNING BEEPER 1.DEF: Unidentified electrical fault

NOTES	**None**

Check the wiring connection between:

Audible warning track 5 → **SSPP computer track 8**

Audible warning track 2 → **Passenger compartment fuse box track 7**

Ensure that fuse **F19** and its holder are in good working order (check terminals, crimping of wires on the terminal, etc.).
Repair if necessary.

After repair, road test the vehicle above 50 mph (80 km/h) to confirm the repair.
Replace the tyre pressure monitor beeper if the fault persists.

AFTER REPAIR	Deal with any other faults. Clear the stored faults. Switch off the ignition and carry out a road test followed by a check with **the diagnostic tool**.

GETtheMANUALS.org

DF015 STORED	VALVE CODE PROGRAMMING 1.DEF: Summer set valve code programming fault 2.DEF: Winter set valve code programming fault

NOTES	**None**

If the SSPP computer has not been programmed with valve codes for one of the two types of wheel sets (winter or summer), this fault is normal and will always be stored. If this occurs, the only way to avoid the fault recurring is to program the same valve codes for both sets of wheels.

Go to the status menu and take a reading of the set of wheels type (summer or winter) stored in the memory.

In the parameters menu, take a reading of the valve codes assigned to the stored wheel type.

Program the four valve codes (see section: **Fault finding - Help**).

Carry out a road test to confirm that the fault has been rectified.

AFTER REPAIR	Deal with any other faults. Clear the stored faults. Switch off the ignition and carry out a road test followed by a check with **the diagnostic tool**.

GETtheMANUALS.org

DF016 PRESENT	TYRE PRESSURE MONITOR RECEIVER UNIT 1.DEF: Unidentified electrical fault

NOTES	**None**

Check the receiver connection under the body. Repair if necessary.
Check the tyre pressure monitor computer connector. Repair if necessary.
Check the wiring harness linking the computer and the under body receiver (for cuts, contamination, pinching, overheating etc.). Repair if necessary.
Check the rear right-hand side connection under the bodywork. Repair if necessary.

Ensure that the receiver is being supplied:

Earth → **track 3** of the underbody receiver connector
+ 12 volt battery → **track 4** of the underbody receiver connector

Ensure that fuse **F6** and its holder are in good working order (check terminals, crimping of wires on the terminal, etc.).

Ensure **the continuity and insulation** against earth of the connection between:
Receiver connector **track 1** → **track 13** SSPP computer

Measure the line resistance of the same connection.
Carry out the necessary operations if the resistance is abnormally high.

If the problem persists, replace the underbody receiver.

AFTER REPAIR	Deal with any other faults. Clear the stored faults. Switch off the ignition and carry out a road test followed by a check with **the diagnostic tool**.

GETtheMANUALS.org

NOTES	**Test conditions: engine stopped, ignition on, tyres inflated to correct pressure.**

Function	Parameter or status Check or action	Display and notes	Fault finding
Valve status	**ET036:** Rear left-hand wheel signal **ET035:** Rear right-hand wheel signal **ET034:** Front right-hand wheel signal **ET033:** Front left-hand wheel signal	Check that each wheel is at normal state if the car has been stationary for more than an hour. Several statuses can be observed: – **Standard** – **Status 1:** Forced signal – **Status 2**: Signal due to a variation in pressure (leak) – **Status 3:** Transmitted when speed is > **12 mph (20 km/h)** – **Status 4:** The valve battery is low – **Status 5:** No signal from the valve	If all the valves are ***correct***, using the valve exciter should change them to **status 1**. If this is not the case, refer to the fault finding procedure for these statuses. Changing the status can also be achieved by deflating the tyres (changing to **status 2**after**15 minutes**) **In all cases, consult the fault finding procedures for states ET033 to ET036**
Wheel type selected	**ET007:** Wheel set selected	Winter or summer	None
Battery voltage	**ET010:** + After ignition feed computer	**ACTIVE**	None

GETtheMANUALS.org

NOTES	**Test conditions: engine stopped, ignition on, tyres inflated to correct pressure.**

Function	Parameter or status Check or action	Display and notes	Fault finding
System warning lights	**ET005:** Service warning light switched on by the system	**UNCONFIRMED**	If one (or more) of these statuses are confirmed, consult the section in the Driver's Handbook on the **Tyre pressure monitor**.
	ET006: Stop warning light switched on by the system	**UNCONFIRMED**	
	ET013: Speed fault warning light switched on	**UNCONFIRMED**	
	ET015: Puncture warning light switched on by the system	**UNCONFIRMED**	

GETtheMANUALS.org

NOTES	**Test conditions: engine stopped, ignition on, tyres cold and inflated to correct pressure**

Function	Parameter or status Check or action	Display and notes	Fault finding
Recommended pressure - axle according to speed	**PR001:** Rear axle high speed recommended pressure **PR004:** Front axle high speed recommended pressure **PR002:** Front axle low speed recommended pressure **PR003:** Rear axle low speed recommended pressure	X = Recommended pressures	Check that the values entered are actually the recommended ones by comparing them with those specified in **section 35 Specifications** of the Workshop Repair Manual. If not, consult the fault finding procedure for parameters: **PR001 to PR004**
Tyre pressures	**PR027:** Front left-hand tyre pressure **PR028:** Front right-hand tyre pressure **PR029:** Rear offside tyre pressure **PR030:** Rear left-hand tyre pressure	X = **PR004** or **PR002** **± 0.5 bar** X = **PR004** or **PR002** **± 0.5 bar** X = **PR001** or **PR003** **± 0.5 bar** X = **PR001** or **PR003** **± 0.5 bar**	**If X = 3.5 bar**, consult the fault finding procedure for parameters: **PR027 to PR030** Ensure that the recommended pressures **(PR001** to **PR004)**) are correct for your vehicle.

GETtheMANUALS.org

NOTES	**Test conditions: engine stopped, ignition on.**

Function	Parameter or status Check or action	Display and notes	Fault finding
Vehicle speed signal	**PR016:** Vehicle speed	X = 0 mph (km/h)	None
Winter wheels code	**PR021:** Front left-hand wheel, winter set code **PR013:** Front right-hand wheel, winter set code **PR022:** Rear left-hand wheel, winter set code **PR014:** Rear right-hand wheel, winter set code	Manufacturer's code or code programmed after a service operation (or any code and fault **DF009** present)	If these parameters do not display any codes and a winter tyre set is fitted, repeat programming of the four valve codes from the beginning, see **section: Fault finding - Help**
Summer wheels code	**PR023:** Front left-hand wheel, summer set code **PR024:** Front right-hand wheel, summer set code **PR026:** Rear left-hand wheel, summer set code **PR025:** Rear right-hand wheel, summer set code	Manufacturer's code or code programmed after a service operation (or any code and fault **DF008** present)	If these parameters do not display any codes and a summer tyre set is fitted, repeat programming of the four valve codes from the beginning, see **section: Fault finding - Help**

GETtheMANUALS.org

ET033 **ET034** **ET035** **ET036**	FRONT LEFT-HAND WHEEL TRANSMISSION FRONT RIGHT-HAND WHEEL TRANSMISSION REAR RIGHT-HAND WHEEL TRANSMISSION REAR LEFT-HAND WHEEL TRANSMISSION

NOTES	**Special notes: Because a tyre pressure sensor is fitted in the wheel, precautions must be taken when removing/refitting tyres. Failure to respect the precautions specified in section 35 of the Workshop Repair Manual could result in the sensor being damaged, and potential operational faults in the tyre pressure monitor.**

Valve status definitions:

Normal: the valve detects a correct pressure (vehicle stationary).

Status 1: the valve changes to forced transmission after the valve exciter tool has been used.

Status 2: the valve detects a leak (when the vehicle is moving and stationary).

Status 3: transmitted by the sensor when the speed is greater than **12 mph (20 km/h)**.

Status 4: the sensor detects a loss of battery power (vehicle stationary and when driving).

Status 5: the valve is no longer transmitting or is no longer present (no reception when stationary or when driving).

STEP 1

It is advisable to ensure that all the valves are transmitting correctly before proceeding with each conformity check. To do this, either run a valve exciter test on all the valves or allow some air to escape from the tyre. Then check to see if their statuses have changed:

Initial status = **normal** or **status 3** or **status 4** or **status 5**	**valve exciter test or air leak**	= Final status = **status 1** (or **2**)
Initial status = **status 2**	**valve exciter test**	= Final status = **status 1**

If the initial status does not change and there is no other receiver fault, replace the valve concerned, following the instructions and the valve code programming procedure, **SC001 Programming a valve code** described in the **Help** section.

STEP 2

If the initial status is: **Status 2**:

Carry out step 1. Check the pressure using a pressure gauge and carry out any operations required to repair the air leak.

If the initial status is **Status 3**:

None. If the status is "increased" **when the vehicle has been stationary** for more than **15 minutes**, replace the faulty valve.

If the initial status is: **Status 4** or **Status 5**:

Carry out step 1. Change the valve on the wheel concerned, following the instructions and the valve code programming procedure **SC001 Programming a valve code**, in the **Fault finding - Help section**.

AFTER REPAIR	Repeat the conformity check from the start.

GETtheMANUALS.org

ET032 **ET031** **ET030** **ET029**	FRONT LEFT-HAND WHEEL VALVE SIGNAL FRONT RIGHT-HAND WHEEL VALVE SIGNAL REAR RIGHT-HAND WHEEL VALVE SIGNAL REAR LEFT-HAND WHEEL VALVE SIGNAL

NOTES	**Special notes: If there is a tyre pressure sensor on the wheels, precautions must be taken when removing/refitting tyres. Failure to respect the precautions outlined in the Workshop Repair Manual could result in the sensor being damaged, and potential operational faults in the tyre pressure monitor.**

Valve status definitions:

Status 1: the sensor has detected a correct pressure (when the vehicle is stationary).

Status 2: the sensor is either no longer transmitting or missing (no reception from the valve when the vehicle is moving or stationary).

Status 3: the tyre is over inflated.

Status 4: the tyre is over inflated.

Status 5: the tyre is under inflated.

Status 6: there is an abnormal loss of air from the tyre.

Status 7: the tyre is slightly under inflated.

Status 8: the tyre is dangerously under inflated.

To check that the valves are working correctly, it is advisable to ensure that they are all transmitting correctly before each conformity check. To do this, either run a valve exciter test on all the valves or allow some air to escape from the tyre. Then check to see if their states have changed:

Initial status = **status 3** or **status 4** or **status 5** or **status 7** or **status 8** exciter (or leak) = **status 1**
If the status does not change, take pressure readings using a pressure gauge.

Initial status = **status 2** exciter (or leak) = **status 1**
If the status does not change and there is no other receiver fault, replace the valve concerned following the instructions and the valve code programming procedure **SC001** described in the **Help** part.

If the initial status = **status 6**:
Check the pressure using a pressure gauge and carry out any operations required to repair the air leak.

Note:
- Threshold for slight under inflation: **302 mbar**.
- Threshold for serious under inflation.**605 mbar**.
- Over inflation threshold when hot: **796 mbar**.
- Over inflation threshold when cold: **494 mbar**.
  (tyres are considered to be cold when there has been no **+ after ignition feed** for 1 hour 45 minutes).
- Left - right pressure imbalance: **494 mbar**.

AFTER REPAIR	Repeat the conformity check from the start.

GETtheMANUALS.org

PR001 **PR004**	REAR AXLE HIGH SPEED RECOMMENDED PRESSURE FRONT AXLE HIGH SPEED RECOMMENDED PRESSURE

NOTES	**No fault should be present or stored:** Carry out this fault finding procedure after detecting a discrepancy between the recommended pressure levels and the readings stored in the computer memory. **Warning:** The Workshop Repair Manual must be consulted to obtain the recommended pressures for the tyres **actually fitted on the vehicle** or on the label on the door rabbet (depending on version) or the driver's handbook.

If after comparing with the manufacturer's recommendations (see **section 35 of the Workshop Repair Manual**), the recommended pressures and those stored in the computer are found to be incorrect, reprogram the recommended pressures as follows:

In the general menu, select **Command mode**, then click on the settings button and enter selection: **VP009: Enter recommended pressures**.

Enter and confirm the recommended pressure values.

Then check that the recommended tyre inflation pressures have been stored correctly by going to the parameter menu.

In the event of any problem occurring, start the operation again from the beginning.

AFTER REPAIR	Repeat the conformity check from the start.

GETtheMANUALS.org

PR002 **PR003**	FRONT AXLE LOW SPEED RECOMMENDED PRESSURE REAR AXLE LOW SPEED RECOMMENDED PRESSURE

NOTES	**There must be no present or stored faults.** Carry out this fault finding procedure after detecting a discrepancy between the recommended pressure levels and the readings stored in the computer memory. **Warning:** The Workshop Repair Manual must be consulted to obtain the recommended pressures for the tyres **actually fitted on the vehicle** or on the label on the door rabbet (depending on version) or the driver's handbook.

If after comparing with the manufacturer's recommendations (see **section 35 of the Workshop Repair Manual**), the recommended pressures and those stored in the computer are found to be incorrect, reprogram the recommended pressures as follows:

In the general menu, select **Command mode**, then click on the settings button and enter selection: **VP009: Enter recommended pressures**.

Enter and confirm the recommended pressure values.

Then check that the recommended tyre inflation pressures have been stored correctly by going to the parameter menu.

In the event of any problem occurring, start the operation again from the beginning.

AFTER REPAIR	Repeat the conformity check from the start.

GETtheMANUALS.org

PR027 **PR028** **PR029** **PR030**	FRONT LEFT-HAND WHEEL TYRE PRESSURE FRONT RIGHT-HAND WHEEL TYRE PRESSURE REAR RIGHT-HAND WHEEL TYRE PRESSURE REAR LEFT-HAND WHEEL TYRE PRESSURE

NOTES	**There must be no present or stored faults** Carry out this fault finding procedure after detecting a discrepancy in the parameter displays.

IMPORTANT
When communication is established, the default value of the settings is displayed (3.5 bar). Using the valve exciter or a road test, force each valve to transmit to discover the actual pressure levels measured by the sensors during the fault finding procedure.

In all cases, check that the pressure readings displayed on the fault finding tool correspond with those on the pressure gauge. (to the nearest) **0.5 bar**.

If the sets of readings correspond, the parameters and sensors are sound, and the fault finding test can be ended here.

If the readings do not correspond, you may encounter two possible scenarios:

1st case: The parameters still display **3.5 bar**:

This means that the wheel valve codes do not correspond to the wheel set programmed into the computer. (When the computer receives the valve codes, it will not recognize them because they do not correspond to the wheel set codes already programmed, which are the only ones it will recognize). To rectify this:

Go to the **Command Mode** menus, and then settings: **VP002** and change the wheel set (if necessary, follow the procedure described in the **section: Fault finding - Help**). Go back to the **Settings** menu, excite each valve and check that the correct readings are being displayed.

2nd case: The parameters display readings different from those measured (and different from **3.5 bar**).

Where the difference is significant, it indicates a faulty sensor. Replace any faulty sensors. Follow the programming procedure: **SC001**, see **section Fault finding - Help**.

After programming, repeat the fault finding procedure from the beginning.

AFTER REPAIR	Repeat the conformity check from the start.

GETtheMANUALS.org

MATCHING THE VALVE TO THE TYRE

Each sensor is matched to the correct wheel during production, when the tyre pressure monitor computer is programmed with the identification codes. This is so that a faulty wheel can be identified (given that the receiver cannot determine the position of the wheel transmitting the signal).

Consequently, **it is forbidden to swap wheels over without having carried out reprogramming**. A sensor marking system ensures that tyres can easily be refitted in their original place.

Coloured rings are attached to the valve nuts, and they correspond to the four colours shown on the pressures label and the vehicle handbook.

The colours are:

Front left: green	Front right: yellow
Rear left-hand: red	Rear right: black

If the driver wants to swap over his wheels, there are two possible solutions:
– either remove each sensor and replace them in their original position on the vehicle,
– or, using the diagnostic tool, reprogram the tyre pressure monitor computer with the new sensor positions (the coloured rings must be swapped so that they are in the correct order, as shown above).

How do you find out the sensor codes?

There are three possible solutions:

- ***If the sensor is new:*** It has a two-part label, one of which is detachable. The code is written on both sections. The detachable section enables the operator to remember the code after the sensor has been fitted in the wheel (it is advisable to temporarily attach this label to the wheel in which the sensor is fitted).

- ***If the sensor is used:*** If removed with the label still attached on top, its code can still be read.

- ***If the sensor is already fitted to the wheel and no label is visible:*** in this case, you can:

– either remove the tyre and read the number on the sensor,
– or obtain the sensor codes using the diagnostic tool.

The difficulty is that each sensor only transmits once every hour when stationary. Furthermore, if more than one sensor is fitted, it is not possible to determine which sensor transmitted. In which case:
– either turn the wheel at a speed of more than **12 mph (20 km/h)** so that the sensor transmits a signal more frequently and can therefore be identified (wheel balance, driving with only one sensor fitted),
– or send the sensor into forced transmission using the valve exciter (recalling the code and entering **status 1**).

GETtheMANUALS.org

CF005	CONFIGURATION PROCEDURE

Mégane with PAX tyres or Mégane without PAX tyres or VEL SATIS

Go to the **Command mode - Configuration** menu and, according to the vehicle equipment level, select either:

CF005: Mégane with PAX tyres, if the vehicle is fitted with a tyre pressure monitor for PAX (these tyres allow the vehicle to be driven with flat tyres for a maximum distance of 120 miles (200 km)),

or

CF005: Mégane without PAX tyres, if the vehicle is fitted with a tyre pressure monitor without PAX.

or

CF005: VEL SATIS, if the vehicle is fitted with a tyre pressure monitor without PAX.

Exit the **Configuration** menu and enter the **LC006** and **LC003 Configuration reading** menu to check that the command has been stored.

If the configuration has not been recorded, repeat the procedure from the beginning.

GETtheMANUALS.org

SC001	VALVE CODE PROGRAMMING PROCEDURE

IMPORTANT
Any operations involving valve replacement should not be attempted without full knowledge of the recommendations defined in the Workshop Repair Manual section 35.

There are two methods for valve programming.

– Manually, using the diagnostic tool, in which case the valve code must be known,

– Automatically, by changing the valve status, in which case a valve exciter tool must be available (**MS. 1607**).

Manual programming: Exercise special care when matching valve and wheel codes.

⇒ (**CLIP**) In the General menu, select the **Command mode** sub-menu, followed by **Specific command**. Select command **SC001 VALVE CODE PROGRAMMING** and follow the instructions given for manual entry (1 to 8 digits maximum).

⇒ (**NXR**) Go to the **Command** menu, select **Scenario** and then select command **SC001 VALVE CODE PROGRAMMING** and follow the instructions given for manual entry (1 to 8 digits maximum).

Automatic programming with valve exciter: Ensure that fault **DF016: SSPP receiver** is not present.

⇒ Same access procedure as manual programming, but follow the instructions for automatic programming.

⇒ Excite the valve concerned. The exciter must be resting **against the tyre** just under the valve concerned. Pressing the exciter button switches on the green indicator light. When this light goes out, and the red light comes on, the valve exciter test is complete. Then check that the code has been retrieved on the tool.

If running the exciter test does not make the code reappear, change the valve.

Automatic programming without valve exciter.

REMINDER: The valve sends the receiver a message consisting of: its status, pressure and code. The receiver decodes this information and sends it to the UCH.

When the vehicle is moving, the valves transmit their status every minute if no leak is present and every 10 seconds if a leak is present (***status 2***).

When the vehicle is stationary, the valves transmit their status every hour if no leak is present and every fifteen minutes if a leak is present (***status 2***).

If a valve exciter is not available, the valve status can be changed by allowing some air to escape (drop the tyre pressure by at least 1 bar, which will raise the wheel to status 2 on the parameter menu).

⇒ Either with the vehicle stationary, in which case wait a quarter of an hour,

⇒ or with the vehicle moving at **> 12 mph (20 km/h)**, (valid only for one wheel at a time).

(tyre leak + road test + save on tool + reinflate tyre) ⟶ **must be repeated for each wheel.**

GETtheMANUALS.org

SC002	PROGRAMMING PROCEDURE FOR THE FOUR VALVE CODES

IMPORTANT
Any operations involving valve replacement should not be attempted without full knowledge of the recommendations defined in the Workshop Repair Manual section 35.

There are two methods for valve programming.

– Manually, using the diagnostic tool, in which case all valve codes must be known,

– Automatically, by changing the valve statuses, in which case the use of valve exciter tool (**MS.1607**) is advised.

Manual programming: Exercise care when matching valve and wheel codes.

⇒ (**CLIP**) In the General menu, select the **Command mode** sub-menu, followed by **Specific command**. Select command **SC002 PROGRAMMING THE FOUR VALVE CODES** and follow the instructions given for manual entry (1 to 8 digits maximum).

⇒ (**NXR**) Go to the **Command** menu, select **Scenario** and then select command **SC002 PROGRAMMING THE FOUR VALVE CODES** and follow the instructions given for manual entry (1 to 8 digits maximum).

Automatic programming with valve exciter: Ensure that fault **DF016: SSPP** receiver is not present.

⇒ Same access procedure as manual programming, but follow the instructions for automatic programming.

⇒ Excite each valve in the order shown on the tool. The exciter must be resting **against the tyre** just under the valve concerned. Pressing the exciter button switches on the green indicator light. When this light goes out, and the red light comes on, the valve exciter test is complete. Then check that the code has been retrieved on the tool. Repeat the process for the other valves.

⇒ If exciting a valve test does not make the code appear, replace the valve.

Automatic programming without valve exciter.

REMINDER: the valve sends a message to the receiver which includes: its code, pressure and status. The receiver decodes this signal and sends it to the tyre pressure monitor computer.

When the vehicle is moving, the valves transmit their status every minute if no leak is present and every 10 seconds if a leak is present (***status 2***).

When the vehicle is stationary, the valves transmit their status every hour if no leak is present, and every fifteen minutes if a leak is present: ***(status 2)***.

If a valve exciter is not available, the valve status can be changed by allowing some air to escape (drop the tyre pressure by at least 1 bar, which will raise the wheel to status 2 on the parameter menu).

⇒ Either with the vehicle stationary, in which case wait fifteen minutes for each wheel,

⇒ Or, with the vehicle moving at a speed > **12 mph (20 km/h)**, (but only valid for one wheel at a time)

(tyre leak + road test + save on tool + reinflate wheel ⟶ **repeat for each wheel**)

GETtheMANUALS.org

VP009	ENTERING THE RECOMMENDED PRESSURE READINGS:

To enter the recommended pressure readings correctly, it is essential to refer to the manufacturer's recommendations (in the Workshop Repair Manual or driver's handbook **for the vehicle concerned**).

In the general menu, select **Command mode**, then click on the settings button and enter selection: **VP009: Enter recommended pressures**.

Program the Workshop Repair Manual values into the memory and confirm.

Then check that the recommended readings have been stored correctly by going to the parameter menu (via the general menu).

In the event of any problem occurring, start the operation again from the beginning.

VP002	WHEEL SET SELECTION PROCEDURE:

Go to the general menu, click on the **list of statuses** sub menu, check the wheel set type stored in the memory, by displaying status: **ET007**.

If the selected wheel set is incorrect, follow the procedure described below:

– In the general menu, select **Command mode**, then click on the settings button and enter selection: **VP002: Tyre set selection**.

– Move the cursor key to winter (climate type) and press enter, then select a climate type using the up and down arrow keys. Confirm.

– Use the blue button to confirm again and the storage window opens. Select yes or no. Press the return key to exit the window.

Checking the modification:

– Go back to the general menu, click on the **list of statuses** sub-menu and check that the wheel set has been correctly stored in the memory by displaying status: **ET007**.

– Each valve must then undergo an exciter test to discover the tyre pressure. (If not, the tool will display a default value of: **3.5 bar**).

In the event of any problem occurring, start the operation again from the beginning.

GETtheMANUALS.org

VP017	CHANGING THE ACTIVATION THRESHOLD

NOTES	**IMPORTANT** Use this command for the valves fitted on Vel Satis.

This command is used to increase the activation threshold of the pressure warning light on the display, so that the valves are less sensitive to pressure differences.

This command can be used in the event of the persistent, erratic appearance of the pressure fault warning light on the display.

In the general menu (CLIP and NXR), select Command mode, then click on the other **Settings** button and enter selection **VP017 MODIFICATION OF ACTIVATION THRESHOLD**.

CLIP: Use the blue button to confirm, the memory window opens. Switch off the ignition and select yes or no. Wait for the "Command executed" message before leaving this window with the return button.

NXR: Switch off the ignition and confirm with the Next button.

In the event of any problem occurring, start the operation again from the beginning.

Repeating the operation several times changes nothing and involves no risk. However, the original values cannot be restored once this operation has been carried out.

Running this command is the only way to confirm its proper execution (the new thresholds cannot be checked in the computer).

GETtheMANUALS.org

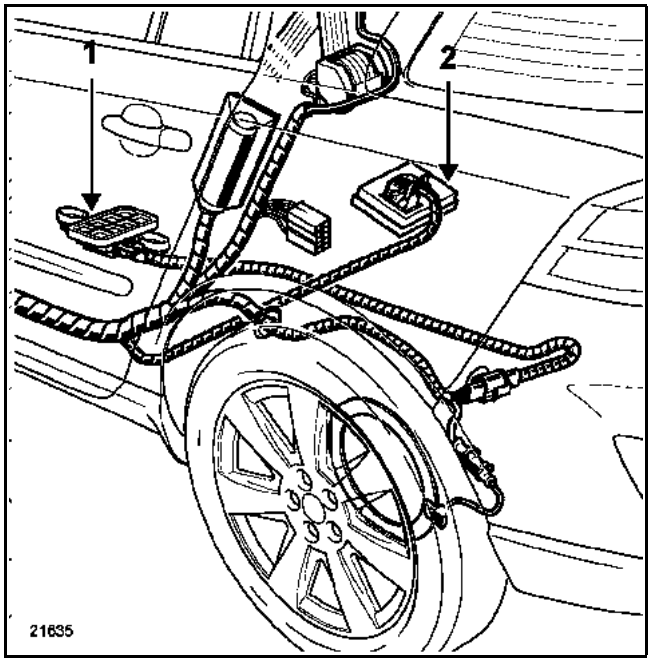

No.	Description
1	Tyre pressure monitor receiver
2	Tyre pressure monitor computer (under rear seat)

GETtheMANUALS.org

AC001	WARNING LIGHTS AND DISPLAY

NOTES	**No fault should be present or stored:** Carry out this fault finding test after detecting a malfunction on the display.

Command **AC001** controls the tyre pressure monitor symbol located in the centre of the dashboard.

Running this command triggers:
- On the symbol: – The flashing of the four wheels and doors.
  – The "mph (km/h)" and "puncture" symbols are lit continuously.
- On the instrument panel: – The flashing of the tyre pressure monitor fault warning light (**10 sequences**).

The **SERVICE** and **STOP** warning lights on the instrument panel are not activated by the command, although it is possible to monitor them in the period between the ignition being switched on and the engine starting. The **Tyre Pressure Monitor fault** warning light can be checked in the same way: it is lit for **3 seconds** after the ignition is switched on.

If the vehicle is equipped with the voice synthesiser, when this command is activated it will inform you of the valve statuses. In this case, it reports a failure because valves with an operational fault are being simulated on the display.

In the event of a problem, carry out a fault finding procedure for the instrument panel to interpret command AC001.

With tyre pressure monitor symbol + instrument panel (see previous page):
Switch on the ignition: does the symbol light up?
If not, check the display supply:
Check that fuses **F19** are in good condition (must be **15A**, check for continuity, oxidation, crimping of wires on terminals). Repair if necessary.

+ 12 V after ignition

⟶

Track 6, **15-track** black connector for tyre pressure monitoring system display.

earth

⟶

Track 5, **15-track** black connector for tyre pressure monitoring system display.

Repair if necessary.

If the display lights up, are the door icons visible?
If not: Run a check on the connection between the display and the door switches.
Repair if necessary.

If the doors are depicted, and the symbol displays do not light up when the command is run: Replace the SSPP display.

GETtheMANUALS.org

WARNING LIGHTS FOR A SYSTEM MALFUNCTION

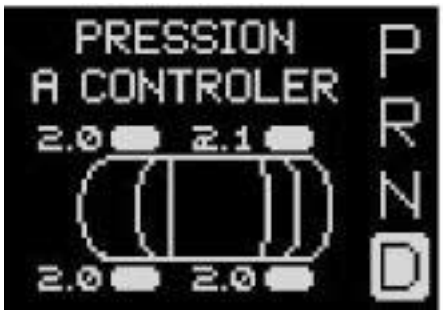

17883

Information display with Check pressure + pressure reading for each tyre

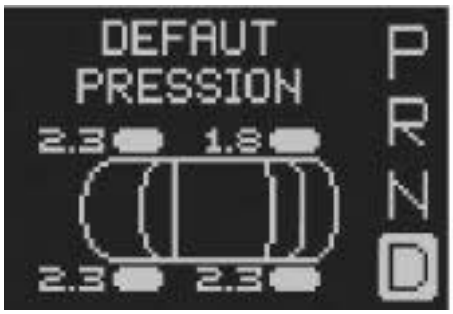

17872

Information display with Faulty pressure + pressure reading for each tyre

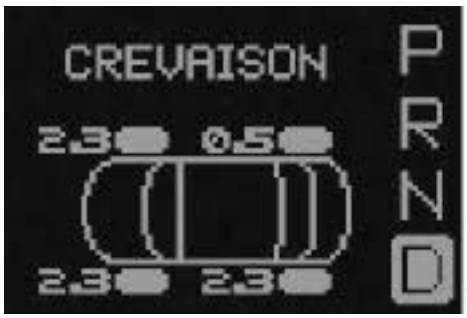

17864

Information display with Flat tyre + pressure reading for each tyre

17879

Information display with Faulty sensor + pressure reading for each tyre

GETtheMANUALS.org

NOTES	Customer complaints should only be investigated after a complete check has been carried out using the diagnostic tool.

NO DIALOGUE WITH THE COMPUTER → **ALP 1**

SYSTEM CHECK SCREEN FAULT → **ALP 2**

CHECK PRESSURE MESSAGE OR WARNING LIGHT → **ALP 3**

Information display showing:
- Grey display of each tyre's pressure + "Check pressure" message + tyre(s) concerned flashing on offset display.
- Orange display (faulty pressure greater than 0.3 bar) of each tyre's pressure + "Faulty pressure" message + tyre(s) concerned flashing on offset display.
- Red display (faulty pressure greater than 0.6 bar) of each tyre's pressure + "Faulty pressure" message + tyre(s) concerned flashing on offset display.
- Red display of each tyre's pressure + "Puncture" message + tyre(s) concerned flashing on offset display + Puncture warning light lit.

PRESSURE NOT MONITORED INDICATOR OR MESSAGE (INTERMITTENT WARNING) → **ALP 4**

Information display showing:
- Orange "Faulty sensor" message + tyre(s) concerned off + tyre(s) concerned off on offset display.

PRESSURE NOT MONITORED MESSAGE OR WARNING LIGHT (CONTINUOUS WARNING) → **ALP5**

Information display showing:
- Orange "Faulty sensor" message + tyre(s) concerned off + tyre(s) concerned off on offset display.

GETtheMANUALS.org

ALP 1	No dialogue with the computer

NOTES	None.

Check the vehicle's battery voltage.

Try the **diagnostic tool** on another vehicle.

Check:
– the connection between the diagnostic tool and the diagnostic socket (cable in good condition),
– the tyre pressure monitor, engine and passenger compartment fuses.

Repair if necessary.

Check for +**12 Volts** on **track 16** of the **+ 12V** before ignition on **track 1** and earth on **track 5** and **track 4** of the diagnostic socket.

Repair if necessary.

Check the **insulation, continuity and the absence of interference resistance** on the connections between:
Tyre pressure monitor computer track 2 → **Earth**
Tyre pressure monitor computer track 10 → **Earth**
Tyre pressure monitor track 12 → **Track 7 Diagnostic socket**

Repair if necessary.

Check for a **+ 12 volts supply** to the tyre pressure monitor computer:
Tyre pressure monitor computer track 1 → **Earth**
Tyre pressure monitor computer track 3 → **Earth**

Check the various fuses of the system.
Repair if necessary.

If the fault is still present, contact the Techline.

AFTER REPAIR	Carry out a check using the diagnostic tool.

GETtheMANUALS.org

ALP 2	System check screen fault

NOTES	**Only refer to this customer complaint after a complete check with the diagnostic tool.** The four wheel icons do not light up on the display after the ignition has been switched on.

Run the instrument panel self-test procedure to check the operation of the tyre pressure monitor and display warning lights.

Check that the vehicle is fully equipped with tyre pressure monitor valves.

Run a valve exciter test on one of the vehicle's four valves. Check that the status corresponding to the wheel has switched to **STATUS1**, if not:

Check the underbody receiver connection.

Repair if necessary, or change the receiver.

If the connection is correct, the underbody aerial is faulty.

Change the receiver.

Check:
– the connection between computer **track 13** and the underbody receiver,
– that the underbody wiring is in good condition.

Repair if necessary.

AFTER REPAIR	Carry out a check using the diagnostic tool.

GETtheMANUALS.org

ALP 3	Check tyre pressure warning light or signal

Force the four sensors to transmit using the valve exciter (without reprogramming) and check whether the message on the instrument panel and the pressure check warning lights are cleared.
Make sure that the recommended pressures read in parameters **PR001 to PR004** match the recommended pressures indicated on the door or in the driver's handbook for the vehicle. Otherwise, run command **VP009 Enter recommended pressures** (see **Dealing with command modes**). Do a forced transmission of the valves (without reprogramming).
If there is a puncture warning on the instrument panel after readjusting the pressure, the sensor may not have detected the readjustment. In this case, deflate the tyre concerned by at least **300 mbar** and force the valve to transmit using the exciter. Then readjust the pressure and force the valve to transmit again using the exciter. Switch the ignition off and then on again.
If the instrument panel warning occurred while the vehicle was being started after it had been parked in severe weather conditions (under the midsummer sun or outside in intense cold), switch off the ignition for **1 hour 45 minutes** then switch it back on or program the four valve codes in accordance with procedure **SC002 Programming the 4 valve codes**.
If the check pressure message is still there after all this, replace the malfunctioning sensor(s). Then repeat the valve code programming procedure from the beginning. Send in the sensor(s) with a completed tyre pressure monitor operation fault finding log.
If the message is still present, contact the Techline.

AFTER REPAIR	Carry out a check using the diagnostic tool.

GETtheMANUALS.org

ALP 4	Pressure not monitored warning light or signal (Intermittent warning)

Check: – the underbody receiver connector. – the UCH connector. – the wiring harness connecting the UCH and underbody receiver. – the rear left-hand wheel arch union. Carry out the necessary repairs.
If there are no faults on the connections or wiring harness, replace the underbody receiver.
After changing the underbody receiver, excite the sensors using the valve exciter and check that statuses **ET033 to ET036 WHEEL SIGNAL change to STATUS 1**: forced transmission.
Send the receiver to the Part Returns Department with a duly completed diagnostic sheet.
If these tests do not lead to improvement and the warning is present (see **ALP 5 Pressure not monitored, continuous warning**).

AFTER REPAIR	Carry out a check using the diagnostic tool.

GETtheMANUALS.org

ALP 5	Pressure not monitored warning light or signal (Permanent warning)

One or more wheel warning lights on the instrument panel display disappear

Remove the tyre of the wheel missing on the dashboard. Make sure the sensor is fitted the right way round.
If it is fitted the right way round, replace it and program the code for the new sensor. Send the sensor to the Part Returns Department with a duly completed TPMS diagnostic sheet.
If it is fitted the wrong way round, correct it and carry out a road test for at least **5 minutes** at a speed greater than **18 mph (30 km/h)**.
If the wheel warning light does not reappear, contact the Techline and send the sensor to the Parts Return Department with a completed Tyre Pressure Monitor fault finding log.

AFTER REPAIR	Carry out a check using the diagnostic tool.

GETtheMANUALS.org

VEL SATIS

3 Chassis

37B ELECTRONIC PARKING BRAKE

FPA
Vdiag No.: 0C, 04, 08, 0D, 11

Fault finding – Introduction	37B - 2
Fault finding – System operation	37B - 8
Fault finding – Allocation of computer tracks	37B - 12
Fault finding – Replacement of components	37B - 13
Fault finding – Configurations and programming	37B - 16
Fault finding – Fault summary table	37B - 17
Fault finding – Interpretation of faults	37B - 18
Fault finding – Conformity check	37B - 71
Fault finding – Status summary table	37B - 93
Fault finding – Interpretation of statuses	37B - 94
Fault finding – Parameter summary table	37B - 97
Fault finding – Interpretation of parameters	37B - 98
Fault finding – Interpretation of commands	37B - 99
Fault finding – Customer complaints	37B - 104
Fault finding – Fault finding chart	37B - 105

V9 **Edition Anglaise**

"The repair procedures given by the manufacturer in this document are based on the technical specifications current when it was prepared.

The procedures may be modified as a result of changes introduced by the manufacturer in the production of the various component units and accessories from which his vehicles are constructed."

All rights reserved by Renault s.a.s.

Copying or translating, in part or in full, of this document or use of the service part reference numbering system is forbidden without the prior written authority of Renault s.a.s.

© Renault s.a.s. 2013

GETtheMANUALS.org

1. SCOPE OF THIS DOCUMENT

This document presents the fault finding procedure applicable to all computers with the following specifications:

Vehicle(s): **Vel Satis phase 1**
Vel Satis phase 2
Laguna II Phase 2
Scénic II Phase 1 and
Scénic II Phase 2
Espace IV phase 1
Espace IV phase 2
Espace IV phase 4

Function concerned: **Electronic parking brake**

Name of computer: **FPA**

Vdiag No.: **0C, 04, 08, 0D, 11**

2. PREREQUISITES FOR FAULT FINDING

Documentation type

Fault finding procedures (this document):
– Assisted fault finding (integrated into the diagnostic tool), Dialogys.
Wiring Diagrams:
– Visu-Schéma (CD-ROM), paper.

Type of diagnostic tools

– CLIP

Special tooling required

Special tooling required	
Multimeter	
Elé. 1681	**Universal bornier**

3. REMINDERS

Procedure

To save power, the UCH on the Laguna II Phase 2, Espace IV phase 1, 2 and 4, and Vel Satis phase 1 and 2 interrupts the **+ after ignition feed** supply after **3 minutes**.

To run fault finding on a computer, it is possible to force the **+ after ignition feed** for **1 hour** by applying the following procedure:

– Press the card unlocking button,
– Insert the card into the reader,
– press the start button (interrupting the **timed + after ignition feed** mode),
– press the start button for more than **5 seconds**, until the immobiliser warning light flashes rapidly (**4 Hz**).

This **forced + after ignition feed** mode remains active for **1 hour**.
Pressing the start button or removing the card from the card reader interrupts the forced **+ after ignition feed**, but does not interrupt the time period for the forced **+ after ignition feed**. Until one hour has elapsed, activating the **+ after ignition feed** will restart forced **+ after ignition feed** for the remaining time.

GETtheMANUALS.org

Only affects the Scénic II phase 1 and the Scénic II phase 2:

To run fault finding on the vehicle's computers, switch on the ignition in fault finding mode (forced + after ignition feed).
Proceed as follows:
– Renault card in the card reader (keyless vehicle scenario 1, entry-level, without hands-free and scenario 2, top of the range, hands-free),
– press and hold the Start button (longer than **5 seconds**) with start-up conditions not fulfilled,
– connect the diagnostic tool and perform the required operations.

To cut off **+ after ignition feed**, proceed as follows:
– disconnect the diagnostic tool,
– press the Start button twice briefly (less than **3 seconds**).
– ensure that the + after ignition feed has been cut off by checking that the computer indicator lights on the instrument panel have gone out.

Fault context.

Affects VDiag 08, 0C, 0D and 11.	
Explanation of the fault context counters. The are three different counters:	
PR022: Dating counter **PR018:** Presence counter **PR019:** Frequency counter	
Dating counter:	The counter starts when the fault appears. Each time the computer switches on and the fault is stored or present, the counter increases **by 1 up to 255**.
Presence counter:	As soon as the fault is present, the counter goes to **15**. If the fault becomes stored, each time the computer switches on, the number decreases **by 1 (from 15 to 0)** and goes back to 15 again if the fault reappears.
Frequency counter:	Number of times the present fault appears; it sets to 0 when the fault appears. It increases each time the fault moves from stored to present. The maximum value of this counter is 15.

GETtheMANUALS.org

Faults

Faults are declared present or stored (depending on whether they appeared in a certain context and have disappeared since, or whether they remain present but are not diagnosed within the current context).

The **present** or **stored** status of faults should be taken into consideration when the diagnostic tool is used following the **+ after ignition** supply being switched on (without acting on the system components).

For a **present fault**, apply the procedure described in the **Interpretation of faults** section.

For a **stored fault**, note the faults displayed and apply the instructions in the **Notes** section.

If the fault is **confirmed** when the instructions are applied, the fault is present. Deal with the fault.

If the fault is **not confirmed**, check:
- the electrical lines which correspond to the fault,
- the connectors for these lines (for oxidation, bent pins, etc.),
- the resistance of the faulty component,
- the condition of the wires (melted or split insulation, wear).

Conformity check

The aim of the conformity check is to check data that does not produce a fault on the diagnostic tool when the data is inconsistent. Therefore, this stage is used to:
- carry out fault finding on faults that do not have a fault display, and which may correspond to a customer complaint,
- check that the system is operating correctly and that there is no risk of a fault recurring after repairs.

This section gives the fault finding procedures for statuses and parameters and the conditions for checking them. If a status is not behaving normally or a parameter is outside the permitted tolerance values, consult the corresponding fault finding page.

Customer complaints - Fault finding chart

If the test with the diagnostic tool is OK but the customer complaint is still present, the fault should be dealt with by **Customer complaints**.

A summary of the overall procedure to follow is provided on the following page in the form of a flow chart.

GETtheMANUALS.org

4. FAULT FINDING PROCEDURE

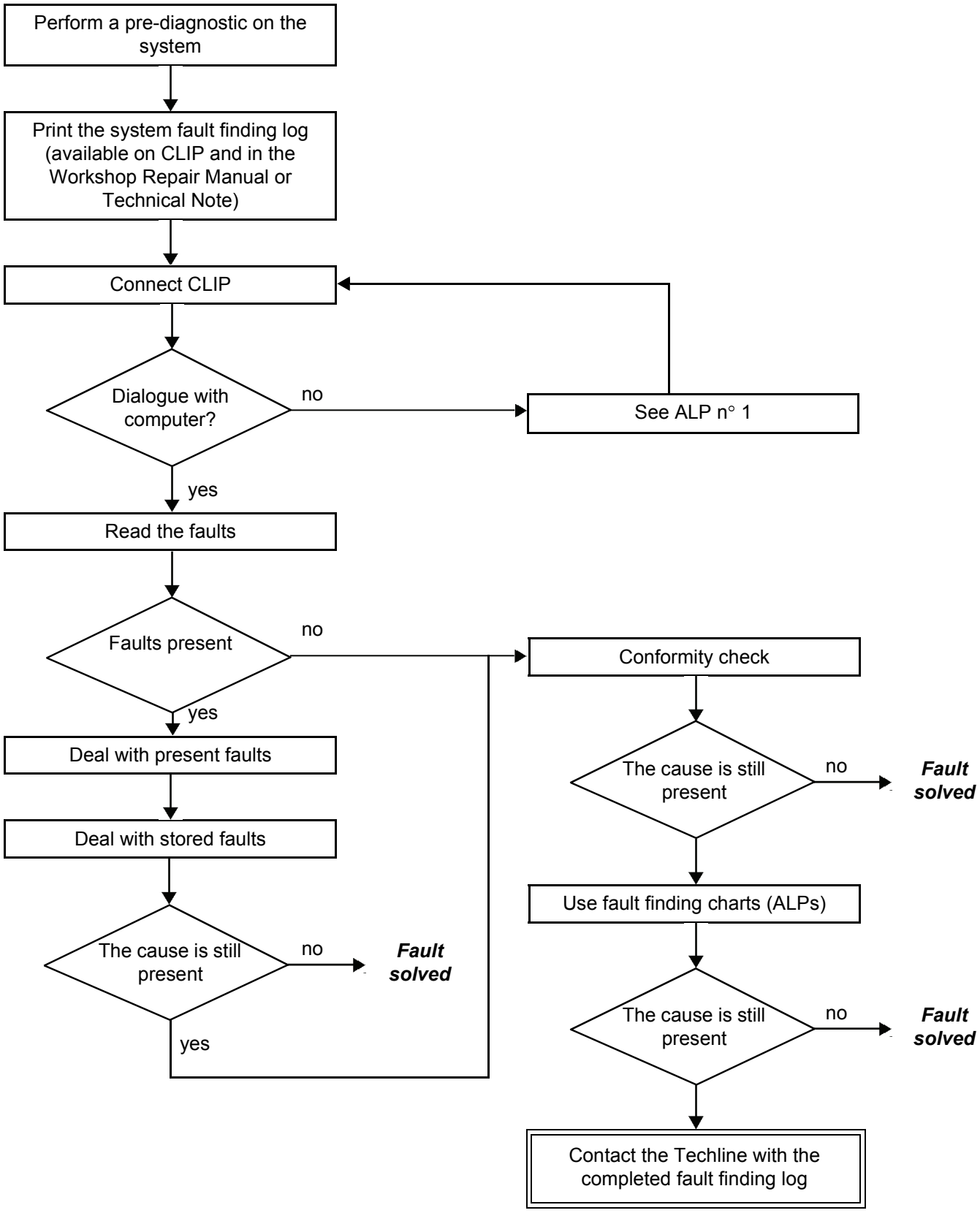

GETtheMANUALS.org

4. FAULT FINDING PROCEDURE (CONTINUED)

Wiring check

Fault finding problems
Disconnecting the connectors and/or handling the wiring harness may temporarily remove the cause of a fault and create other faults.
Electrical measurements of voltage, resistance and insulation are generally correct, especially if the fault is not present when the analysis is made (stored fault).

Visual inspection
Look for damage under the bonnet and in the passenger compartment.
Carefully check the fuses, insulators and wiring harness routing.
Look for signs of oxidation.

Physical inspection
While manipulating the wiring, use the diagnostic tool to note any change in fault status from stored to present.
Make sure that the connectors are properly locked.
Apply light pressure to the connectors.
Twist the wiring harness.
If there is a change in status, try to locate the source of the fault.

Inspection of each component
Disconnect the connectors and check the appearance of the clips and tabs, as well as the crimping (no crimping on the insulating section).
Make sure that the clips and tabs are properly locked in the sockets.
Check that no clips or tabs have been dislodged during connection.
Check the clip contact pressure using an appropriate model of tab.

Continuity and insulation check
Check the continuity of entire lines, then section by section.
Look for a short circuit to earth, to **+ 12 V** or to another wire.
If a fault is detected, repair or replace the wiring harness.

GETtheMANUALS.org

5. FAULT FINDING LOG

IMPORTANT!

IMPORTANT
Any fault on a complex system requires thorough fault finding with the appropriate tools. The FAULT FINDING LOG, which should be completed during the fault finding procedure, ensures a record is kept of the procedure carried out. It is an essential document when consulting the manufacturer.

IT IS THEREFORE ESSENTIAL THAT THE FAULT FINDING LOG IS FILLED OUT EVERY TIME IT IS REQUESTED BY TECHLINE OR THE WARRANTY RETURNS DEPARTMENT.

You will always be asked for this log:

- when requesting technical assistance from Techline,
- for approval requests when replacing parts for which approval is mandatory,
- to be attached to monitored parts for which reimbursement is requested. The log is needed for warranty reimbursement, and enables better analysis of the parts removed.

6. SAFETY INSTRUCTIONS

Safety rules must be observed during any work on a component to prevent any damage or injury:

– check the battery voltage to avoid incorrect operation of computer functions,
– use the proper tools.

GETtheMANUALS.org

PRESENTATION OF THE PARKING BRAKE:

The electronic parking brake provides the following functions:
- keeps the vehicle stationary when stopped (parking brake).
- 'dynamic' emergency brake (if the main brakes fail).
- automatic braking force adjustment according to the slope (adapted application),
- electronically-assisted parking brake application when the engine is stopped (depending on configuration),
- easy start with electronically-assisted parking brake release (depending on configuration),
- manual application and release by pulling on the lever.

SYSTEM COMPONENTS AND OPERATION:

The system consists of the following components:

- **Control lever** with brake on indicator light.
  - For applying and releasing the parking brake.

- **Control unit** (computer) housing an electric motor, the brake cable hooks, angle sensor and force sensor.
  - The **angle sensor** controls locking according to the angle of the slope.
  - The **force sensor** checks and corrects the force applied to the brakes.

- **Clutch pedal position sensor to help with pulling away**.
  - Informs the computer of the vehicle's clutch position (the position of the pedal enables the torque necessary for vehicle movement to be obtained).

- Two **mechanical cables**
  - Convey the mechanical force to the rear brakes.

- **Emergency control** cable (in the central storage compartment on the **LAGUNA, VEL SATIS** and **ESPACE** and in the boot on the **SCENIC**).
  - Enables the rear brakes to be released in the event of the battery or parking brake failing.

- **Warning lights** and symbol on the instrument panel.
  - Indicate application, releasing and any faults on the parking brake.

Note:
The parking brake cable play compensation is performed automatically by the control unit.

GETtheMANUALS.org

MANUAL OPERATION:

– The parking brake is engaged by pulling on the control lever (normal braking immobilises the vehicle).

– Over-application can be obtained by pulling and holding the lever for **5 seconds** (maximum application for steep hills or when the vehicle has reached its maximum permissible all-up weight).

– When the parking brake is applied, the computer super-applies if the force applied to the rear brake callipers is insufficient (pads cooling) or if the computer detects slight vehicle movement. This detection is limited to **24 hours**.

– The parking brake is released when the control lever is applied fully and the release switch is pressed.

Note:
When the parking brake is applied, the red light on the instrument panel (brake pads) and indicator light on the lever are lit.
Below **6 mph** (10 km/h) pulling the lever applies the rear brakes. Above **6 mph** (10 km/h) pulling the lever provides dynamic emergency braking without locking the rear wheels (statutory deceleration of **1.5 m/s^2**).
The electronic parking brake can only be released when the steering column is unlocked (**forced + after ignition feed**, see **Introduction**).

ASSISTED OPERATION:

The electronic parking brake enables assisted application and release of the brake:

- Applying the brake: When the engine is switched off, the parking brake is applied when the driver presses the start button
- Releasing: The brake releases when the drive wheels reach the torque required to move the vehicle (**Note:** with automatic transmission, the driver's door must be closed).

Restrictions on assisted brake release in automatic transmissions:
Assisted release is **not allowed** in the following cases:

– Opening the driver's door **followed** by engaging a gear (gear lever in position **D**).

Note: In this case, the instrument panel displays the message Lever in **P** or **N** and the buzzer on the instrument panel sounds.

– Engaging a gear (gear lever in position **D**) **followed** by opening the driver's door.

Note: In this case, **release is authorised for 5 s** after the driver's door has been opened (e.g. for a manoeuvre). After **5 seconds** release is prevented.

Note:
Assisted braking and release only occurs if the computer has been configured.
For details on how these configurations function, see **Configuration and programming**.

GETtheMANUALS.org

GENERAL OPERATING MODE FOR THE COMPUTER:

The electronic parking brake computer operates in two modes: **STANDBY** mode and **SWITCH ON** mode.

- **SWITCH ON** mode:

Available functions:

- Manual application and release, assisted application and release and emergency braking (steering column unlocked).
- Full system fault finding (all faults can be identified).

Switch on conditions (3 possibilities):

- The UCH sends a **switch on** request to the parking brake computer via the multiplex network when the vehicle is opened or the card is inserted in the reader.
- Braking request via the parking brake control lever.
- Battery voltage more than **13.2 V**, if the vehicle has been parked for less than **24 hours**.

- **STANDBY** mode:

Available functions:

- Monitoring of the braking force and slope angle for **24 hours** (to ensure parking brake application).
- Only application is authorised (using the lever).
- Restricted system fault finding (the computer can no longer identify all faults).
- Release not authorised.

Conditions for setting to standby:

- The UCH sends a "set to standby" request to the parking brake computer via the multiplex network after the ignition is switched off and the vehicle is locked (after a few seconds). The parking brake computer's STANDBY mode will be confirmed by the lever warning light going out (special note: the battery voltage must be less than **13.2 V**).

WARNING
Before using the emergency control, it is important to put the vehicle into gear and wedge one wheel if necessary (on a slope).

CABLE RESETTING:

The parking brake cable is locked after the control lever is released or after driving at over **1 mph** (2 km/h) (switched on mode).
When the electronic parking brake system locks, it makes a sound that lasts for a few seconds and ends with clicking (play compensation is automatic).

GETtheMANUALS.org

WARNING LIGHT MANAGEMENT

Indications of a level 1 fault:
- **Check Parking Brake** message on the instrument panel display.
- **orange warning light** (**P** in a triangle) on the instrument panel comes on.
- **SERVICE** warning light comes on.

Indications of a level 2 fault:
- **Parking brake defective** message on the instrument panel display.
- **1-second** audible warning (from the instrument panel),
- **orange warning light** (**P** in a triangle) on the instrument panel comes on.
- **SERVICE** warning light comes on,
- **Red indicator light** (brake pad light) on the instrument panel comes on.
- parking brake control lever indicator light flashes.

Note:
When the lever warning light stops flashing, the instrument panel message disappears. If the system has a level 2 fault, whenever the lever is used, the indicator light on the lever starts flashing again and the fault message reappears.

Warning occurs:
- when the door is opened and a gear is engaged on an automatic transmission,
- when the vehicle is moving, despite the parking brake being applied,
- when the door is opened, with the engine running and the parking brake released,
- when the door is opened, with the engine stopped and the parking brake released,

GETtheMANUALS.org

ALLOCATION OF COMPUTER TRACKS FOR THE ELECTRONIC PARKING BRAKE AND THE CONTROL LEVER

Track	Description
A1	Not used
A2	Multiplex line L
A3	Multiplex line H
A4	Diagnostic line K
B1	Not used
B2	Not used
B3	Not used
B4	Not used
C1	Not used
C2	Dynamic brake switch signal (1st switch)
C3	Dynamic brake switch signal (2nd switch)
C4	Lever warning light lit
D1	Not used
D2	Dynamic brake switch supply (1st switch)
D3	Static brake switch supply (2nd switch)
D4	Not used
E1	Not used
E2	Clutch pedal sensor earth
E3	Clutch pedal sensor signal
E4	Clutch pedal sensor supply
F1	Not used
F2	Not used
F3	Not used
F4	Not used
G1	Not used
G2	Computer earth (SCENIC II Ph 1 and Ph 2 only)
G3	Not used
G4	+ Battery feed (SCENIC II Ph 1 and Ph 2 only)
H1	Not used
H2	Computer earth
H3	+ 12 V battery

Control lever tracks	
6	→ + 12 V battery
12	→ + 12 V side lights
2	→ Earth
7	← C2
10	← C3
5	← C4
9	← D2
4	← D3

Clutch pedal sensor tracks	
3	
2	← F1
1	← F2

Note:
The clutch pedal sensor is only fitted to vehicles with a manual gearbox.

GETtheMANUALS.org

A/ PROCEDURE FOR REPLACING AN ELECTRONIC PARKING BRAKE COMPUTER

Note:
An electronic parking brake computer should be replaced **only when requested by the Techline** (fill out the fault finding log).

- For the description of the mechanical operations for replacing the control unit (computer) and brake cables (see **MR405 (Espace IV) or MR395 (Laguna II) or MR370 (Scénic), Mechanical, 37B, Electronic parking brake, Control unit: Removal - Refitting and 37A, Mechanical component controls, Parking brake cables: Removal - Refitting or MR353 (Vel Satis), Mechanical, 37B, Automatic parking brake, Control unit and brake cables**).
- The parking brake cables must always be replaced when the computer is replaced.
- In the same way, the computer must be replaced when the parking brake cables are changed.
- Conversely, the lever and the parking brake are independent of one another.
- Lever replacement must be carried out with **+ after ignition feed** switched off and the parking brake released, otherwise faults may occur.
- The clutch sensor must be replaced with **+ after ignition feed** switched on to avoid a fault being provoked.

BEFORE REPLACING THE PARKING BRAKE COMPUTER:

If the vehicle has a **manual gearbox**, recover the **clutch data** from the memory of the old computer so that it can be entered into the new computer (see section **C**).

Note:
With an automatic transmission, no data recovery is required (the computer can be replaced without applying sections **C and D**).

Operations to perform before replacement:

– Switch on the ignition, connect the diagnostic tool and establish dialogue with the computer (parking brake field).
– before replacing the computer, check that it is actually causing the fault by reading the faults and apply the fault finding procedure concerned.

Important:
Do not clear the faults from the computer before replacing it.

Steps to follow after replacement:

– with the ignition switched off, replace the electronic parking brake computer (with the approval of Techline).
– switch on the ignition, connect the diagnostic tool and establish dialogue with the computer (parking brake field),
– apply the procedure described in section **B: NEW COMPUTER CALIBRATION AND INITIALISATION**,
– release the parking brake lever to reset the cables.
– check parking brake operation by testing the braking, maximum braking, and release,
– read the faults to clear any stored faults and check that replacing the computer has enabled the fault on the vehicle to be rectified (no faults present).
– read the configuration (repair mode menu) to check that the parking brake computer configuration has been correctly configured.
– depending on the configuration chosen, check the assisted braking and release.

IMPORTANT: It is strictly forbidden to drive a vehicle with an electronic parking brake computer unless it is in customer mode.

GETtheMANUALS.org

B/ COMMISSIONING A NEW COMPUTER

1/ COMPUTER CONFIGURATION

– Carry out configuration in accordance with the customer's request (see **Configurations and programming**).

2/ VEHICLE IDENTIFICATION NUMBER ENTRY

– run command **VP004 Write VIN**.
– enter the vehicle identification number using the **diagnostic tool** keypad,
– confirm.

Note:
If the vehicle identification number is not entered and command **CF007 Vehicle configuration** is not run, step 3 of initialising the computer will not work.

3/ COMPUTER CALIBRATION AND COMMISSIONING

WARNING
To initialise the computer, the vehicle must be on a horizontal surface with the brake cables correctly fitted (connected to the rear brake callipers) and nobody must be working on the vehicle.

– In **+ after ignition feed**, run command **VP011 Computer calibration and initialisation** and carry out the following 4 steps.

STEP 1 VEHICLE MASS CALIBRATION
Screen 1:
With the dropdown menu, enter the following information:
– vehicle type,
– engine type,
– gearbox type,
– type of driving style,
– equipment level (for Vdiag 04),
– confirm the operation by pressing **Next**.

Screen 2:
– reread the highlighted information.
– If the highlighted information does not match the vehicle, return to the selection screen by pressing **Back**,
– if the highlighted information is correct, continue with step 2 by pressing **Next**.

STAGE 2 INITIALISING A NEW PARKING BRAKE
– Initialise the brake by pressing **YES** (you should hear a noise as the brake is applied and then released).
– Proceed to step 3 by pressing **Next**.

STEP 3 SLOPE INITIALISATION
– Calibrate the slope sensor by pressing **Confirm**. Proceed to step 4 by pressing **Next**.

STEP 4 INITIALISING ASSISTED BRAKING
– Carry out initialisation by pressing **Confirm**.
– Return to the selection list screen by pressing **Finish**.

GETtheMANUALS.org

C/ CLUTCH DATA BACKUP (for vehicles with a manual gearbox)

Purpose of the procedure:

The data saved relates to the clutch engagement point. This is important when the clutch wears, because this data enables the parking brake to release electronically when the clutch enables the vehicle to move off.

If this data cannot be retrieved from the old computer (impossible to establish dialogue with the diagnostic tool) or a new clutch has been fitted, the new computer has to be programmed with the clutch engagement point: drive the vehicle, downshifting at least 30 times (from 5th to 4th gear) before returning the vehicle to the customer.

If the clutch data is not recorded in the new computer, the operation of the assisted brake on steep slopes will be impaired when first used.

Perform the following operations:

IMPORTANT:
Do not apply this procedure in the event of a clutch fault.

- establish dialogue with the computer,
- select the repair mode menu on the diagnostic tool.
- open the programming menu,
- run function **SC005** Backup clutch pedal programming (the data is written to a file that is automatically selected when the new computer is programmed).
- replace the electronic parking brake computer (see **MR405 (Espace IV) or MR395 (Laguna II) or MR370 (Scénic), Mechanical, 37B, Electronic parking brake, Control unit: Removal - Refitting or MR353 (Vel Satis), Mechanical, 37B, Automatic parking brake, Control unit**),
- follow the procedures described in sections **A** and **B**.

D/ CLUTCH DATA ENTRY (for vehicles with automatic transmission)

The initialisation must be carried out (sections **A** and **B**).

Perform the following operations:

- establish dialogue with the computer,
- select the repair mode menu on the diagnostic tool.
- open the programming menu,
- run function: **SC006 Enter clutch pedal programming**.
- check that the electronic parking brake is operating correctly, including the assisted release function.

Note:
- For vehicles fitted with an **automatic gearbox**, command **SC005 Save clutch pedal programming** is **unavailable**.
- Command **SC006 Enter clutch pedal programming**, is also unavailable if command **SC005** has not already been activated.

GETtheMANUALS.org

CONFIGURATIONS:

Two functions can be turned off by configuration: assisted application and release.

Special note:
Assisted application and release are configured by default when a new computer is initialised. This configuration is accessible in the log book.

To carry out configuration, select the diagnostic tool's **Repair mode** menu.

CF007 Vehicle configuration

This configuration turns electronic parking brake application on or off when the engine is stopped.
In cold countries or regions, assisted braking should preferably be inhibited to avoid brake cables becoming frozen in the applied position.

- Select the type of configuration:
  - NORMAL (**with** assisted braking when the engine is stopped).
  - COLD CLIMATE (**without** assisted braking when the engine is stopped).
- Confirm the operation.
- Make sure the configuration has been properly entered by reading configuration **LC009 Vehicle configuration**.
- Make sure the assisted braking function works.

PROGRAMMING:

- Refer to the configuration check.

Note:
When a new computer is initialised, the angle sensor is calibrated by running command **VP011 Computer calibration and initialising**.

GETtheMANUALS.org

Tool fault	Associated DTC	Diagnostic tool title
DF003	**50C3**	Computer
DF004	**50CA**	Computer
DF006	**50C5**	Computer configuration
DF015	**5166**	Clutch position sensor circuit
DF016	**50 CB**	Warning light circuit
DF025	**5168**	Vehicle movement with maximum application
DF028	**517E**	Computer
DF029	**517B**	Computer
DF035	**5170**	Undervoltage
DF036	**5180**	No injection multiplex signal
DF037	**5181**	No ABS system multiplex signal
DF038	**5188**	No automatic transmission multiplex signal
DF039	**5183**	No UCH multiplex signal
DF041	**5160**	Angle sensor (internal)
DF042	**5161**	Force sensor (internal)
DF043	**5162**	Parking brake motor
DF044	**516C**	Brake switch
DF045	**5172**	Redundant brake switch
DF046	**516F**	Brake motor/cables connection
DF047	**5171**	Manual control
DF048	**5173**	Release switch
DF049	**5175**	Braking
DF050	**5178**	Mechanical jamming (internal)
DF051	**5176**	System fault after computer replacement
DF052	**516D**	Multiplex network
DF054	**50C1**	Battery overvoltage
DF055	**50C0**	Battery voltage too low
DF056	**5163**	Brake cables incorrectly fitted
DF057	**517A**	Computer internal temperature sensor
DF058	**5177**	Parking brake motor current (internal)
DF059	**5194**	No Protection and Switching Unit multiplex signal
DF073	**5174**	Computer

GETtheMANUALS.org

DF003 PRESENT OR STORED	COMPUTER 1. DEF: Internal electronic fault 2. DEF: Internal electronic fault 3. DEF: Loss of computer supply voltage

NOTES	**Priorities when dealing with a number of faults:** This fault must be dealt with first.
	Special notes: Before replacing the electronic parking brake computer, **save the data from the old computer** (for vehicles fitted with a manual gearbox). For this operation, see **Replacement of components**.

1. DEF ***2. DEF***	***NOTES***	None.

If the fault is present or stored, contact the **Techline**.

3. DEF	***NOTES***	**Special notes:** The fault does not usually come from the electronic parking brake computer. This fault indicates that the computer has detected several losses of feed (micro-breaks). **Note:** This fault may be caused by several battery disconnections or a vehicle power supply fault. **Only for Vdiag 08, 0C and 0D:** **If there is a stored fault, refer to the statuses and parameters when it appears.** Explanation of counters: see **Introduction**. If the fault is stored and **PR018 = 0** and **PR022 > 25**, then clear the fault: do not take this fault into account.
		Conditions for applying the fault finding procedure to a stored fault: Apply this fault finding procedure if the fault reappears as present or stored after a fault has been cleared and forced + after ignition feed has been switched off and on again (see **Introduction**).

AFTER REPAIR	If the computer has been replaced **(at the request of the Techline)**, initialise the electronic parking brake computer (see **Replacement of components**). Issue several braking and release commands to confirm the repair. Deal with any other faults.

GETtheMANUALS.org

DF003 **CONTINUED**	

Disconnect the electronic parking brake computer connector (under the body near the rear axle) to check the **conformity of the power supply** (this must equal the voltage measured at the battery terminals **± 0.5 V**).
Check **the insulation, continuity and the absence of interference resistance** on the following connections:

Electronic parking brake computer connector

track H4
(except Laguna II, Vel Satis and Espace IV) → **+ 12 V**
track G4

track H2
(except Laguna II, Vel Satis and Espace IV) → **earth**
track G2

Note:
If the electrical supply is correct, check that the supply has not been cut off by moving the electrical harness (near to the intermediate connector under the front left-hand seat at the computer connector).
Repair if necessary (see the vehicle wiring diagram).

If the fault persists, contact the **Techline**.

AFTER REPAIR	If the computer has been replaced **(at the request of the Techline)**, initialise the electronic parking brake computer (see **Replacement of components**). Issue several braking and release commands to confirm the repair. Deal with any other faults.

GETtheMANUALS.org

DF004 PRESENT OR STORED	COMPUTER 1. DEF: Internal electronic fault

NOTES	**Priorities when dealing with a number of faults:** This fault must be dealt with first.
	Special notes: Before replacing an electronic parking brake computer, **save the data from the old computer** (for vehicles fitted with a manual gearbox). For this operation, see **Replacement of components**.

Contact the Techline without clearing the faults.

AFTER REPAIR	If the computer has been replaced **(at the request of the Techline)**, initialise the electronic parking brake computer (see **Replacement of components**). Issue several braking and release commands to confirm the repair. Deal with any other faults.

GETtheMANUALS.org

DF006 PRESENT	COMPUTER CONFIGURATION 1. DEF: Configuration absent or incorrect

NOTES	**Special notes:** Deal with this fault only after the computer has been replaced. If it appears when the electronic parking brake computer is not new, contact the Techline. This fault indicates that the parking brake control unit has not been calibrated or has been calibrated incorrectly. This fault causes the electronic parking brake to operate incorrectly, in particular for the assisted release function.

Display status **ET024 System operation** on the main screen of the diagnostic tool.
This status should be **CUSTOMER MODE**. If it is **FACTORY MODE**, initialise the computer by running command **VP011 Computer calibration and initialisation** (see **Replacement of components**).

Test that the parking brake is operating correctly by applying it, applying it completely (handle pulled right up for **5 seconds**) and releasing it.

Check the validity of parameter **PR003 "Inclination value"**.
Calibrate the sensor if necessary **(SC008 Slope initialisation**).

If necessary, reconfigure the application and release functions as requested by the customer with **CF007 Vehicle configuration** and see **Configurations and programming**.

If the above procedure does not resolve the fault (fault still present), recalibrate the computer (command **VP011 Computer calibration and initialisation** on the diagnostic tool).
During this stage, check that the vehicle criteria are correctly entered (screen 2 stage 1).

If the fault is still present, contact the **Techline** without clearing the faults.

AFTER REPAIR	If the computer has been replaced **(at the request of the Techline)**, initialise the electronic parking brake computer (see **Replacement of components**). Issue several braking and release commands to confirm the repair. Deal with any other faults.

GETtheMANUALS.org

DF015 PRESENT OR STORED	CLUTCH POSITION SENSOR CIRCUIT CC.0 : Short circuit to earth CC.1 : Short circuit to + 12 volts 1. DEF: Signal inconsistency between the sensor and the gearbox 2. DEF: Signal outside lower limit 3. DEF: Sensor supply fault

NOTES	**Priorities when dealing with a number of faults:** Deal with faults **DF035 Undervoltage, DF055 Battery undervoltage and DF054 Battery voltage too high** first, if they are present or stored.
	Special notes: The fault does not usually come from the electronic parking brake computer. The fault should only be displayed on a vehicle fitted with a manual gearbox. If it is displayed on an automatic transmission, check the configurations. The sensor should be replaced in **+ after ignition feed**, if not this fault may occur. If the fault appeared following replacement of the clutch position sensor, check the procedure and repeat it in **+ after ignition feed** if necessary, after clearing the fault. If the fault cannot be cleared, disconnect the clutch sensor under **+ after ignition feed**, then reconnect it. **Only for Vdiag 08, 0C and 0D:** **If there is a stored fault, refer to the statuses and parameters when it appears.** Explanation of counters: see **Introduction**. If the fault is stored and **PR018 = 0** and **PR022 > 25** clear the fault: do not take this fault into account.

CC.0; CC.1; 3.DEF	***NOTES***	**Conditions for applying the fault finding procedure to a stored fault:** The fault is declared present when the ignition is switched on (forced + after ignition feed, see **Introduction**).

Check **the connection and condition** of the clutch pedal position sensor connector.
Repair if necessary.

With the clutch pedal position sensor connector disconnected, check **the insulation, continuity and absence of interference resistance** on the following connections:

AFTER REPAIR	If the computer has been replaced **(at the request of the Techline)**, initialise the electronic parking brake computer (see **Replacement of components**). Issue several braking and release commands to confirm the repair. Deal with any other faults.

GETtheMANUALS.org

DF015 **CONTINUED**	

Clutch pedal position sensor connector: **1057**

Electronic parking brake computer connector: **1217**

Track 1 → **Track E4**

Track 2 → **Track E3**

Track 3 → **Track E2**

Repair if necessary.

Disconnect the clutch pedal position sensor connector to check, with the ignition switched on and the electronic parking brake computer connector connected, **the presence of a 5 volt supply**, by measuring between **tracks 1 and 3** of the sensor (**+ 5 V** on **track 1** and earth on **track 3**).
If the 5 V supply is not present and the connections previously checked are correct, contact the Techline.

With the clutch pedal position sensor connector disconnected, measure the sensor resistance between **tracks 1 and 3** of the sensor.
Replace the sensor if its resistance is not **5200** Ω **± 520** Ω.

If the fault is still present, contact the **Techline**.

1. DEF; 2. DEF	***NOTES***	**Conditions for applying the fault finding procedure to a stored fault:** Engine at idle speed, and gear engaged for **5 seconds**.

Check the operation of statuses **ET016 Manual gearbox gear lever position** and **ET017 Reverse gear engaged** and the absence of any incorrect contacts.
If not correct, check the operation of the gearbox sensor.

Check that the clutch pedal position sensor is **fitted correctly**: the **"arm"** of the potentiometer should be inserted correctly into its mounting lug (neither above nor below).

Using the diagnostic tool, display parameter **PR006 Clutch pedal position** on the main data screen (see the conformity check values).

Check the conformity of the pedals.

If the fault persists, contact the **Techline**.

AFTER REPAIR	If the computer has been replaced **(at the request of the Techline)**, initialise the electronic parking brake computer (see **Replacement of components**). Issue several braking and release commands to confirm the repair. Deal with any other faults.

GETtheMANUALS.org

DF016 PRESENT OR STORED	WARNING LIGHT CIRCUIT CC.0: Short circuit to earth CC.1: Short circuit to + 12 V.

NOTES	**Priorities when dealing with a number of faults:** Deal with faults **DF035 Undervoltage, DF055 Battery undervoltage and DF054 Battery voltage too high** first, if they are present or stored.
	Conditions for applying the fault finding procedure to a stored fault: The fault is declared present after the forced + after ignition is switched on (see **Introduction**) and an application request using the control lever.
	Special notes: The fault does not usually come from the electronic parking brake computer. **Note:** After a release request, the fault becomes stored. Replacing the lever with the parking brake applied may cause this fault. If this fault appears after replacing the lever, release the parking brake and carry out the procedure again. **Only for Vdiag 08, 0C and 0D:** **If there is a stored fault, refer to the statuses and parameters when it appears.** Explanation of counters: see **Introduction** section. If the fault is stored and **PR018 = 0** and **PR022 > 25** clear the fault: do not take this fault into account. If the fault is stored and **PR019 < 3**, clear the fault: do not take this fault into account.

Check that the electronic parking brake control lever connector is in **good condition** and also check its clips (terminals).
Repair if necessary.

Check that there is a **12 V + before ignition** supply on **track 6** of the electronic parking brake control lever: see wiring diagram.
Repair if necessary.

Disconnect the electronic parking brake control lever connector in order to check **the insulation, continuity and absence of interference resistance** on the following connection:

Electronic parking brake control lever connector: **1216**		Electronic parking brake computer connector: **1217**
Track 5	⟶	**Track C4**

Repair if necessary.

If the fault is still present, replace the parking brake control lever (the indicator light cannot be separated).

If the fault persists, contact the **Techline**.

AFTER REPAIR	If the computer has been replaced **(at the request of the Techline)**, initialise the electronic parking brake computer (see **Replacement of components**). Issue several braking and release commands to confirm the repair. Deal with any other faults.

GETtheMANUALS.org

DF025 PRESENT OR STORED	VEHICLE MOVEMENT WITH MAXIMUM APPLICATION 1. DEF: Rear wheel movement with parking brake applied 2. DEF: Front wheel movement with parking brake applied

NOTES	**Priorities when dealing with a number of faults:** First deal with faults **DF046 Brake motor/cables connection, DF042 Force sensor, DF035 Undervoltage, DF041 Slope sensor, DF049 Brake application, DF054 Battery voltage too high and DF055 Battery undervoltage**, if they are present or stored. If none of these faults is present or stored, the parking brake computer is not normally the cause.
	Conditions for applying the fault finding procedure to a stored fault: Apply the fault finding procedure even if the fault is **stored**. **Note:** The fault does not remain present after it has been detected.

1. DEF	***NOTES***	**Special notes:** – This fault indicates that the electronic parking brake computer detected rear wheel movement although the parking brake was applied with maximum force. – It may be associated with **2.DEF**. If this fault is not associated with the faults mentioned above, check the conformity of the parking brake's mechanical force line: – Condition and conformity of rear brake pads. – Parking brake cables correctly fitted. – Good condition of the parking brake cables (no seizing or deterioration). – Conformity, condition and correct operation of the rear brake callipers. This fault is an operational warning. Check the context in which it appears. **It may appear during:** **– incorrect use of a roller test bench which drives the rear wheels (MOT test),** **– forced assisted release when starting, when the starting conditions have not been met,** **– vehicle overload on a very steep slope (maximum permissible all-up weight exceeded + angle > 18°: e.g. towing a trailer or a caravan).**

AFTER REPAIR	If the computer has been replaced **(at the request of the Techline)**, initialise the electronic parking brake computer (see **Replacement of components**). Issue several braking and release commands to confirm the repair. Deal with any other faults.

GETtheMANUALS.org

DF025 **CONTINUED**	

2. DEF	***NOTES***	**Special notes:** – This fault indicates that the electronic parking brake computer detected front wheel movement although the parking brake was applied with maximum force. When this fault appears on its own it is an operating warning that indicates that the vehicle's conditions of use are on the limit (the braking system and parking brake are not normally the cause). This fault is an operational warning. Check the context in which it appears. **It may appear during:** **– an application request, whilst the vehicle is still being driven,** **– forced assisted release when starting, when the starting conditions have not been met,** **– parked on a steep slope with slippery surface,** **– incorrect use of a roller test bench which drives the front wheels (MOT test).** **If the fault is stored, refer to the statuses and parameters when it appears**. Explanation of counters: see **Introduction** section. If the fault is stored and **PR018 = 0 and PR022 > 25** clear the fault: do not take this fault into account.

Using the **diagnostic tool**, display the wheel speed parameters on the parameters screen. When stationary, these parameters must show **0 mph**. If this is not the case, carry out fault finding on the **anti-lock braking system** (see **38C**, **Anti-lock braking system**).
Check that the parking brake mechanical tensioning line is correct: – Parking brake cables correctly fitted. – Good condition of the parking brake cables (no seizing or deterioration). – Conformity, condition and proper functioning of the rear brake callipers. – Condition and conformity of rear brake pads. Carry out the necessary repairs.
Check that the vehicle is not overloaded.
Check that the vehicle's tyres are not bald.
If the fault persists, contact the **Techline**.

AFTER REPAIR	If the computer has been replaced **(at the request of the Techline)**, initialise the electronic parking brake computer (see **Replacement of components**). Issue several braking and release commands to confirm the repair. Deal with any other faults.

GETtheMANUALS.org

DF025 PRESENT OR STORED	VEHICLE MOVEMENT WITH MAXIMUM APPLICATION 1. DEF: The computer has detected vehicle movement when parked (parking brake applied)

NOTES	**Priorities when dealing with a number of faults:** First deal with faults **DF046 Brake motor/cables connection, DF042 Force sensor, DF035 Undervoltage, DF041 Slope sensor, DF049 Brake application, DF054 Battery voltage too high and DF055 Battery undervoltage**, if they are present or stored. If none of these faults is present or stored, the parking brake computer is not normally the cause.
	Conditions for applying the fault finding procedure to a stored fault: Apply the fault finding procedure even if the fault is **stored**. **Note:** The fault does not remain present after it has been detected.
	Special notes: – this fault indicates that the electronic parking brake computer detected movement of the vehicle although the parking brake was applied. – if this fault is present, with the ignition on, the buzzer on the instrument panel is activated (when the vehicle is moving with the parking brake applied). This fault is an operational warning. Check the context in which it appears. **It may appear during:** **– an application request, whilst the vehicle is still being driven,** **– forced assisted release when starting, when the starting conditions have not been met,** **– parked on a steep slope with slippery surface,** **– incorrect use of a roller test bench (MOT test).** **Only for Vdiag 08 and 0C:** **If there is a stored fault, refer to the statuses and parameters when it appears.** Explanation of counters: see **Introduction** section. If the fault is stored and **PR018 = 0 and PR022 > 25**, clear the fault: do not take this fault into account.

AFTER REPAIR	If the computer has been replaced **(at the request of the Techline)**, initialise the electronic parking brake computer (see **Replacement of components**). Issue several braking and release commands to confirm the repair. Deal with any other faults.

GETtheMANUALS.org

DF025 **CONTINUED**	

Using the diagnostic tool, display the wheel speed parameters on the parameters screen. When stationary, these parameters must show **0 mph**. If this is not the case, carry out fault finding on the anti-lock braking system.
Check that the parking brake mechanical tensioning line is correct: – Parking brake cables correctly fitted. – Good condition of the parking brake cables (no seizing or deterioration). – Conformity, condition and proper functioning of the rear brake callipers. – Condition and conformity of rear brake pads. Carry out the necessary repairs.
Check that the vehicle is not overloaded.
Check that the vehicle's tyres are not bald.
If the fault persists, contact the **Techline**.

AFTER REPAIR	If the computer has been replaced **(at the request of the Techline)**, initialise the electronic parking brake computer (see **Replacement of components**). Issue several braking and release commands to confirm the repair. Deal with any other faults.

GETtheMANUALS.org

DF028 PRESENT OR STORED	COMPUTER 1. DEF: Internal electronic fault 2. DEF: Internal electronic fault

NOTES	**Priorities when dealing with a number of faults:** This fault must be dealt with first.
	Conditions for applying the fault finding procedure to a stored fault: Apply the fault finding procedure even if the fault is **stored**.
	Special notes: Before replacing an electronic parking brake computer, **save the data from the old computer** (for vehicles fitted with a manual gearbox). For this operation, see **Replacement of components**.

Contact the **Techline**, without clearing the fault.

AFTER REPAIR	If the computer has been replaced **(at the request of the Techline)**, initialise the electronic parking brake computer (see **Replacement of components**). Issue several braking and release commands to confirm the repair. Deal with any other faults.

GETtheMANUALS.org

DF029 PRESENT OR STORED	COMPUTER 1. DEF: Internal electronic fault 2. DEF: Internal electronic fault

NOTES	**Priorities when dealing with a number of faults:** This fault must be dealt with first.
	Conditions for applying the fault finding procedure to a stored fault: Apply the fault finding procedure even if the fault is **stored**.
	Special notes: Before replacing an electronic parking brake computer, **save the data from the old computer** (for vehicles fitted with a manual gearbox). For this operation, see **Replacement of components**.

Contact the **Techline**, without clearing the fault.

AFTER REPAIR	If the computer has been replaced **(at the request of the Techline)**, initialise the electronic parking brake computer (see **Replacement of components**). Issue several braking and release commands to confirm the repair. Deal with any other faults.

GETtheMANUALS.org

DF035 PRESENT OR STORED	UNDERVOLTAGE 1. DEF: Insufficient feed voltage during the command

NOTES	**Priority in the event of a number of faults:** Deal with fault **DF055 Battery undervoltage** first if it is present or stored.
	Conditions for applying the fault finding procedure to a stored fault: Apply this fault finding procedure if the fault reappears after the ignition has been switched off and on again (+ forced after ignition feed: see **Introduction**) and an application or release request using the control lever.
	Special notes: This fault is a power supply fault and does not usually stem from the electronic parking brake computer. This fault does not indicate computer feed undervoltage but a significant drop in voltage to the parking brake motor while the command is being issued. **Only for Vdiag 08, 0C and 0D:** **If there is a stored fault, refer to the statuses and parameters when it appears.** Explanation of counters: see **Introduction**. If the fault is stored and **PR018 = 0** and **PR022 > 25**, clear the fault: do not take this fault into account.

Disconnect the electronic parking brake computer connector to check the **conformity of the supplies** and to check t**he insulation, continuity and the absence of interference resistance** on the following connections:

Electronic parking brake computer connector

track H4
(except Laguna II, Vel Satis and Espace IV) → **+ 12 V**
track G4

track H2
(except Laguna II, Vel Satis and Espace IV) → **earth**
track G2

Repair if necessary (see the vehicle wiring diagram).

Apply the brake and then release it (engine running) to check that during the command the voltage measured at the fuse does not drop below **10.5 V**.
Make the repairs necessary for the parking brake computer electrical supply to be correct (equal to the battery voltage).

If the fault persists, contact the **Techline**.

AFTER REPAIR	If the computer has been replaced **(at the request of the Techline)**, initialise the electronic parking brake computer (see **Replacement of components**). Issue several braking and release commands to confirm the repair. Deal with any other faults.

GETtheMANUALS.org

DF036 PRESENT OR STORED	INJECTION MULTIPLEX SIGNAL ABSENT 1. DEF: Multiplex signals absent or values invalid (fault with the computer generating the signal or multiplex line connection fault)

NOTES	**Priority in the event of a number of faults:** Deal with faults **DF055 Battery undervoltage and DF052 Multiplex network** first if they are present or stored.
	Deal with any injection computer faults first. The fault does not usually come from the electronic parking brake computer. **Note:** If there is a multiplex line fault like this one, the parking brake loses its assisted application and release functions.
	Conditions for applying the fault finding procedure to a stored fault: Apply this fault finding procedure if the fault reappears as present or stored after a fault has been cleared, and the ignition has been switched off and on again (forced **+ after ignition feed**: see **Introduction**).
	Special notes: This fault only relates to multiplex signals received from the injection computer. This fault indicates either that there is no transmission, or that the signals received by the parking brake are inconsistent. **Only for Vdiag 08, 0C and 0D:** **If there is a stored fault, refer to the statuses and parameters when it appears.** Explanation of counters: see **Introduction** section. If the fault is stored and **PR018 = 0** and **PR022 > 25**, clear the fault: do not take this fault into account. If the fault is stored and **PR019 < 10**, clear the fault: do not take this fault into account.

AFTER REPAIR	If the computer has been replaced **(at the request of the Techline)**, initialise the electronic parking brake computer (see **Replacement of components**). Issue several braking and release commands to confirm the repair. Deal with any other faults.

GETtheMANUALS.org

DF036 **CONTINUED**	

Using the diagnostic tool, run **fault finding on the multiplex network** and particularly on the injection computer - electronic parking brake computer segment. This check ensures that the various multiplex system connections are correct and finds any faulty segments. Carry out any necessary repairs.
If the multiplex network test did not find the faulty connection, carry out a **conformity check** to check that the statuses and parameters coming from the injection computer are present and correct (**ET019, PR015, PR017**). If the status and parameters shown here are not correct, carry out fault finding on the **injection**.
If the fault is still present, disconnect the injection computer connector to check that it is **good condition** as well as its clips (terminals), in particular the clips for the **multiplex tracks** (refer to the wiring diagram for the injection system fitted to the vehicle). Replace the clips if necessary.
If the fault persists, contact the **Techline**.

AFTER REPAIR	If the computer has been replaced **(at the request of the Techline)**, initialise the electronic parking brake computer (see **Replacement of components**). Issue several braking and release commands to confirm the repair. Deal with any other faults.

GETtheMANUALS.org

DF037 PRESENT OR STORED	NO ABS MULTIPLEX SIGNAL 1. DEF: Multiplex signals absent or values invalid (fault with the computer generating the signal or multiplex line connection fault)

NOTES	**Priority in the event of a number of faults:** Deal with faults **DF055 Battery undervoltage and DF052 Multiplex network** first if they are present or stored.
	Deal with any ABS computer faults first. The fault does not usually come from the electronic parking brake computer. **Note:** If this fault is present, the parking brake loses its assisted application and release functions.
	Conditions for applying the fault finding procedure to a stored fault: Apply this fault finding procedure if the fault reappears as present or stored after a fault has been cleared and the ignition has been switched off and on again (forced + after ignition feed: see **Introduction**).
	Special notes: This fault only relates to multiplex signals received from the ABS computer. This fault indicates either that there is no transmission, or that the signals received by the electronic parking brake computer are inconsistent.
	Only for Vdiag 08, 0C and 0D: **If there is a stored fault, refer to the statuses and parameters when it appears.** Explanation of counters: see **Introduction**. If the fault is stored and **PR018 = 0** and **PR022 > 25**, clear the fault: do not take this fault into account. If the fault is stored and **PR019 < 10**, clear the fault: do not take this fault into account.

AFTER REPAIR	If the computer has been replaced **(at the request of the Techline)**, initialise the electronic parking brake computer (see **Replacement of components**). Issue several braking and release commands to confirm the repair. Deal with any other faults.

GETtheMANUALS.org

DF037 **CONTINUED**	

Using the diagnostic tool, run **fault finding on the multiplex system** and particularly on the ABS computer-parking brake control unit segment. This check ensures that the various multiplex system connections are correct and finds any faulty segments. Carry out any necessary repairs.
If the multiplex system test did not find the faulty connection, carry out a **conformity check** to check that the parameters coming from the ABS computer are present and correct (**PR012, PR013, PR014**). If the parameters mentioned are not correct, carry out an **ABS** computer fault finding procedure (see **38C**, **Anti-lock braking system**).
If the fault is still present, disconnect the computer connector to check that it is in **good condition** as well as its clips (terminals), in particular the clips for the **multiplex tracks** (refer to the wiring diagram for the ABS computer fitted to the vehicle). Replace the clips if necessary.
If the fault persists, contact the **Techline**.

AFTER REPAIR	If the computer has been replaced **(at the request of the Techline)**, initialise the electronic parking brake computer (see **Replacement of components**). Issue several braking and release commands to confirm the repair. Deal with any other faults.

GETtheMANUALS.org

DF038 PRESENT OR STORED	NO AUTOMATIC TRANSMISSION MULTIPLEX SIGNAL 1. DEF: Multiplex signals absent or values invalid (fault with the computer generating the signal or multiplex line connection fault)

NOTES	**Priority in the event of a number of faults:** Deal with faults **DF055 Battery undervoltage and DF052 Multiplex network** first if they are present or stored.
	Deal with any automatic transmission computer faults first. The fault does not usually come from the electronic parking brake computer. **Note:** If this fault is present, the parking brake loses its assisted application and release functions.
	Conditions for applying the fault finding procedure to a stored fault: Apply this fault finding procedure if the fault reappears as present or stored after a fault has been cleared, and the ignition has been switched off and on again (forced **+ after ignition feed**: see **Introduction**).
	Special notes: This fault only relates to multiplex signals received from the automatic transmission computer. This fault indicates either that there is no signal or that the signals transmitted are inconsistent. **Only for Vdiag 08, 0C and 0D:** **If there is a stored fault, refer to the statuses and parameters when it appears.** Explanation of counters: see **Introduction**. If the fault is stored and **PR018 = 0** and **PR022 > 25**, clear the fault: do not take this fault into account. If the fault is stored and **PR019 < 15** clear the fault: do not take this fault into account.

AFTER REPAIR	If the computer has been replaced **(at the request of the Techline)**, initialise the electronic parking brake computer (see **Replacement of components**). Issue several braking and release commands to confirm the repair. Deal with any other faults.

GETtheMANUALS.org

DF038 **CONTINUED**	

Check the vehicle gearbox configuration: check that the configuration is not for a manual gearbox when the vehicle is fitted with an automatic transmission, or that it is not configured for an automatic transmission when the vehicle is manual. Using the diagnostic tool, run **fault finding on the multiplex system** and particularly on the automatic transmission computer-parking brake control unit segment. This check ensures that the various multiplex system connections are correct and finds any faulty segments. Carry out any necessary repairs.
If the multiplex system test did not find the faulty connection, carry out a **conformity check** to check that the status coming from the automatic transmission computer is present and correct (**ET018**). If status **ET018** is not correct, carry out fault finding on the **automatic transmission**.
If the fault is still present, disconnect the automatic transmission computer connector to check that it is **sound** as well as its clips (terminals), and in particular the clips for the **multiplex tracks** (refer to the wiring diagram for the automatic transmission computer fitted on the vehicle). Replace the clips if necessary.
If the fault persists, contact the **Techline**.

AFTER REPAIR	If the computer has been replaced **(at the request of the Techline)**, initialise the electronic parking brake computer (see **Replacement of components**). Issue several braking and release commands to confirm the repair. Deal with any other faults.

GETtheMANUALS.org

DF039 PRESENT OR STORED	NO UCH MULTIPLEX SIGNAL 1. DEF: Multiplex signals absent or values invalid (fault with the computer generating the signal or multiplex line connection fault)

NOTES	**Priority in the event of a number of faults:** Deal with faults **DF055 Battery undervoltage and DF052 Multiplex network** first if they are present or stored.
	Deal with any UCH computer faults first. The fault does not usually come from the electronic parking brake computer. **Note:** If this fault is present, the parking brake loses its assisted application and release functions.
	Conditions for applying the fault finding procedure to a stored fault: Apply this fault finding procedure if the fault reappears as present or stored after a fault has been cleared and the ignition has been switched off and on again (forced + after ignition feed: see **Introduction**).
	Special notes: This fault only relates to multiplex signals received from the UCH computer. This fault indicates either that there is no signal or that the signals transmitted are inconsistent. **Only for Vdiag 08, 0C and 0D:** **If there is a stored fault, refer to the statuses and parameters when it appears.** Explanation of counters: see **Introduction**. If the fault is stored and **PR018 = 0 and PR022 > 25**, clear the fault: do not take this fault into account. If the fault is stored and **PR019 < 15** clear the fault: do not take this fault into account.

AFTER REPAIR	If the computer has been replaced **(at the request of the Techline)**, initialise the electronic parking brake computer (see **Replacement of components**). Issue several braking and release commands to confirm the repair. Deal with any other faults.

GETtheMANUALS.org

DF039 **CONTINUED**	

Using the diagnostic tool, run **fault finding on the multiplex system** and particularly on the UCH computer-parking brake control unit segment. This check ensures that the various multiplex system connections are correct and finds any faulty segments. Carry out any necessary repairs.
If the multiplex network test did not find the faulty connection, carry out **a conformity check** to check that the statuses coming from the UCH are present and correct (**ET001, ET014, ET016, ET017, PR001**). If the statuses and parameters specified are not correct, carry out fault finding on the **UCH**.
If the fault is still present, disconnect the connectors to ensure that the UCH connectors are in **good condition** as well as their clips (terminals), in particular the clips for the **multiplex tracks** (refer to the wiring diagram for the UCH fitted to the vehicle). Replace the clips if necessary.
If the fault persists, contact the **Techline**.

AFTER REPAIR	If the computer has been replaced **(at the request of the Techline)**, initialise the electronic parking brake computer (see **Replacement of components**). Issue several braking and release commands to confirm the repair. Deal with any other faults.

GETtheMANUALS.org

DF041 PRESENT OR STORED	SLOPE SENSOR 1. DEF: Signal inconsistency

NOTES	**Priorities when dealing with a number of faults:** This fault must be dealt with first.
	Special notes: The slope sensor is **internal** to the electronic parking brake computer, it cannot be separated. Before replacing an electronic parking brake computer, **save the data from the old computer** (for vehicles fitted with a manual gearbox). For this operation, (see **Replacement of components**).

Contact the **Techline** without clearing the faults.

AFTER REPAIR	If the computer has been replaced **(at the request of the Techline)**, initialise the electronic parking brake computer (see **Replacement of components**). Issue several braking and release commands to confirm the repair. Deal with any other faults.

GETtheMANUALS.org

DF042 PRESENT OR STORED	FORCE SENSOR CC.0: Short circuit to earth CC.1: Short circuit to + 12 V 1. DEF: Sensor supply fault 2 CO.0: Open circuit or short circuit to earth

CC.1 1. DEF	***NOTES***	**Priorities when dealing with a number of faults:** This fault must be dealt with first.
		Special notes: The force sensor is internal to the electronic parking brake computer; it cannot be separated. Before replacing an electronic parking brake computer, **save the data from the old computer** (for vehicles fitted with a manual gearbox). For this operation, (see **Replacement of components**).

Contact the **Techline** without clearing the faults.

CC.0	***NOTES***	**Priority when dealing with a number of faults:** Deal with faults **DF055 Battery undervoltage and DF052 Multiplex network** first if they are present or stored.
		Special notes: The force sensor is internal to the electronic parking brake computer; it cannot be separated. Before replacing a parking brake control unit, **save the data from the old computer** (for vehicles fitted with a manual gearbox). For this operation, (see **Replacement of components**).

Contact the **Techline** without clearing the faults.

AFTER REPAIR	If the computer has been replaced **(at the request of the Techline)**, initialise the electronic parking brake computer (see **Replacement of components**). Issue several braking and release commands to confirm the repair. Deal with any other faults.

GETtheMANUALS.org

DF042 CONTINUED	

2 CO.0	***NOTES***	**Priorities when dealing with a number of faults:** This fault must be dealt with first.
		Special notes: The force sensor is internal to the electronic parking brake computer; it cannot be separated. **Only for Espace IV Ph2 and Vel satis Ph2 in Vdiag 0D.** Before replacing an electronic parking brake computer, **save the data from the old computer** (for vehicles fitted with a manual gearbox). For this operation, (see **Replacement of components**).

Contact the **Techline** without clearing the faults.

AFTER REPAIR	If the computer has been replaced **(at the request of the Techline)**, initialise the electronic parking brake computer (see **Replacement of components**). Issue several braking and release commands to confirm the repair. Deal with any other faults.

GETtheMANUALS.org

DF043 PRESENT OR STORED	PARKING BRAKE MOTOR 1. DEF: Internal electrical fault

NOTES	**Priorities when dealing with a number of faults:** This fault must be dealt with first.
	Special notes: Before replacing an electronic parking brake computer, **save the data from the old computer** (for vehicles fitted with a manual gearbox). For this operation, (see **Replacement of components**).

Check that the parking brake mechanical tensioning line is correct:
– Check the conformity, condition and correct operation of the brake callipers.
– Check the automatic adjustment of the rear brake callipers.

Contact the **Techline** without clearing the faults.

AFTER REPAIR	If the computer has been replaced **(at the request of the Techline)**, initialise the electronic parking brake computer (see **Replacement of components**). Issue several braking and release commands to confirm the repair. Deal with any other faults.

GETtheMANUALS.org

DF044 PRESENT OR STORED	BRAKING SWITCH CC.0: Short circuit to earth CC.1: Short circuit to + 12 V

NOTES	**Priority when dealing with a number of faults:** Deal first with faults **DF047 Manual control, DF035 Undervoltage, DF055 Battery undervoltage and DF054 Battery voltage too high**, if they are present or stored.
	Conditions for applying the fault finding procedure to a stored fault: The fault is declared present after the ignition is switched on (forced **+ after ignition feed**, see **Introduction**) and an application request using the control lever.
	The fault does not usually come from the electronic parking brake computer. **Special notes:** The braking switch is in fact the first contact of the lever (the lever travels about **3 mm**). This fault appears naturally when the lever is disconnected. **Note:** The fault warning light comes on **10 seconds** after the fault appears. **Only for Vdiag 08, 0C and 0D:** **If there is a stored fault, refer to the statuses and parameters when it appears.** Explanation of counters: see **Introduction**. If the fault is stored and **PR018 = 0** and **PR022 > 25**, clear the fault: do not take this fault into account. If the fault is stored and **PR019 < 3**, clear the fault: do not take this fault into account.

AFTER REPAIR	If the computer has been replaced **(at the request of the Techline)**, initialise the electronic parking brake computer (see **Replacement of components**). Issue several braking and release commands to confirm the repair. Deal with any other faults.

GETtheMANUALS.org

DF044 **CONTINUED 1**	

Using the diagnostic tool (**PARKING** sub-function), check the operation of the parking brake control lever. With the ignition on, statuses **ET008, ET009**, **ET010** should operate as follows:

	ET008 "Application switch position"	**ET009 "Redundant braking switch position"**	**ET010 "Release switch position"**
Lever **at rest**	**INACTIVE**	**INACTIVE**	**RELEASED**
Lever **pulled slightly (3 mm travel)**	**ACTIVE**	**INACTIVE**	**RELEASED**
Lever **pulled to end of travel**	**ACTIVE**	**ACTIVE**	**RELEASED**
Lever **pulled and release switch pressed**	**ACTIVE**	**ACTIVE**	**PRESSED**

If the statuses do not operate as explained above, check the **connection and condition** of the parking brake control lever connector.
Repair if necessary.

Check **the condition and connection** of the parking brake computer connectors and their clips (terminals).
Repair if necessary.

AFTER REPAIR	If the computer has been replaced **(at the request of the Techline)**, initialise the electronic parking brake computer (see **Replacement of components**). Issue several braking and release commands to confirm the repair. Deal with any other faults.

GETtheMANUALS.org

DF044 **CONTINUED 2**	

With the parking brake control lever connector disconnected, check the **insulation, continuity and absence of interference resistance** on the following connections:

Parking brake lever connector: **1216**		Electronic parking brake computer: **1217**
track 9	→	**track D2**
track 7	→	**track C2**

Repair if necessary.

With the parking brake control lever connector disconnected, switch on the ignition and **check for a 5 V supply (4 V < X < 5 V)** on **track 7** of the lever connector. If the power supply is not present and the parking brake computer is correctly supplied (no other faults detected by the diagnostic tool), then contact the **Techline**.

If the fault is still present, measure the resistance of the braking switch between **tracks 7 and 9** of the parking brake control lever.
Replace the lever (see **MR405 (Espace IV), MR395 (Laguna II) or MR370 (Scénic), Mechanical, 37B, Electronic parking brake, Lever: Removal - Refitting or MR353 (Vel Satis), Mechanical, 37B, Automatic parking brake, Lever**) if the resistance of the brake application switch is not approximately:
– Lever in rest position: **2700 Ω ± 100 Ω**.
– Lever pulled: **172 Ω ± 15 Ω**.

If the fault persists, contact the **Techline**.

AFTER REPAIR	If the computer has been replaced **(at the request of the Techline)**, initialise the electronic parking brake computer (see **Replacement of components**). Issue several braking and release commands to confirm the repair. Deal with any other faults.

GETtheMANUALS.org

DF045 PRESENT OR STORED	REDUNDANT BRAKE SWITCH 1. DEF: Signal inconsistency

NOTES	**Priority when dealing with a number of faults:** Deal first with faults **DF047 Manual control, DF035 Undervoltage and DF055 Battery voltage too low**, if they are present or stored.
	Conditions for applying the fault finding procedure to a stored fault: This fault must be dealt with first.
	Special notes: The fault does not usually come from the electronic parking brake computer. The redundant brake switch is the second contact of the lever (maximum lever travel). **Only for Vdiag 08, 0C and 0D:** **If there is a stored fault, refer to the statuses and parameters when it appears.** Explanation of counters: see **Introduction**. If the fault is stored and **PR018 = 0** and **PR022 > 25** clear the fault: do not take this fault into account. If the fault is stored and **PR019 < 3**, clear the fault: do not take this fault into account.

Using the diagnostic tool (**PARKING** sub-function), check the operation of the parking brake control lever. With the ignition switched on, statuses **ET008, ET009** and **ET010** should operate as follows:

	ET008 "Engagement switch position"	**ET009 "Redundant braking switch position"**	**ET010 "Release switch position"**
Lever **at rest**	**INACTIVE**	**INACTIVE**	**RELEASED**
Lever **pulled slightly (3 mm travel)**	**ACTIVE**	**INACTIVE**	**RELEASED**
Lever **pulled to end of travel**	**ACTIVE**	**ACTIVE**	**RELEASED**
Lever **pulled and release switch pressed**	**ACTIVE**	**ACTIVE**	**PRESSED**

If the statuses do not operate as explained above, check the **connection and condition** of the parking brake control lever connector.
Repair if necessary.

AFTER REPAIR	If the computer has been replaced **(at the request of the Techline)**, initialise the electronic parking brake computer (see **Replacement of components**). Issue several braking and release commands to confirm the repair. Deal with any other faults.

GETtheMANUALS.org

DF045 **CONTINUED**	

With the parking brake control lever connector disconnected, check the **insulation, continuity and absence of interference resistance** on the following connection:

Parking brake lever connector: **1216**		Electronic parking brake computer: **1217**
track 10	⟶	**track C3**

Repair if necessary.

With the parking brake control lever connector disconnected, check **for earth** on **track 2** of the lever connector.
Repair if necessary.

If the fault persists, **check the redundant braking switch**:
Lever in rest position: **insulation** between **tracks 2 and 10** of the lever.
Lever fully applied: **continuity** between **tracks 2 and 10** of the lever.
Replace the parking brake control lever if it does not function as indicated (see **MR405 (Espace IV), MR395 (Laguna II) or MR370 (Scénic), Mechanical, 37B, Electronic parking brake, Lever: Removal - Refitting or MR353 (Vel Satis), Mechanical, 37B, Automatic parking brake, Lever**).

If the fault persists, contact the **Techline**.

AFTER REPAIR	If the computer has been replaced **(at the request of the Techline)**, initialise the electronic parking brake computer (see **Replacement of components**). Issue several braking and release commands to confirm the repair. Deal with any other faults.

GETtheMANUALS.org

DF046 PRESENT OR STORED	BRAKE MOTOR/CABLES CONNECTION (EMERGENCY UNLOCKING) 1. DEF: Parking brake unlocked by the emergency handle

NOTES	**Priority when dealing with a number of faults:** Deal first with faults **DF003, DF004, DF028, DF029, DF035, DF041, DF042, DF043, DF050, DF054, DF055, DF057, DF058 and DF073** if they are present or stored.
	Conditions for applying the fault finding procedure to a stored fault: Apply this fault finding procedure if the fault recurs after the fault is cleared, with the ignition switched off and on again (forced **+ after ignition feed**, see **Introduction**), and the parking brake released then applied using the control lever.
	Special notes: The fault does not usually come from the electronic parking brake computer. This fault indicates that the electronic parking brake system has been unlocked by the manual control (if this is the case, check that the handle protector has not been damaged). Check that the emergency unlocking handle has not been manually pulled by the user, which would provoke this fault. The cables are reset by the parking brake release manual command or automatically (if the fault is present) when the vehicle is driven at more than **1.2 mph (2 km/h)** (the fault is then stored).
	Only for Vdiag 08, 0C and 0D: **If there is a stored fault, refer to the statuses and parameters when it appears.** Explanation of counters: see **Introduction**. If the fault is stored and **PR018 = 0** and **PR022 > 25** clear the fault: do not take this fault into account. If there has been no manual use of the emergency unlocking handle and if **PR019 > 5**, contact the **Techline**.

Check that the fault was not provoked by manual usage of the emergency unlocking handle. In this case, it is normal for the fault to arise; clear the fault.
Carry out a releasing command, then a braking command with the control lever to **reset the cables** of the parking brake.
Check the conformity of the parking brake mechanical tensioning line: correctly attached, no breakage. Check the conformity of the emergency unlocking cable. Carry out the necessary repairs.
Check that the braking force and maximum braking are operating correctly.
If the fault persists, contact the **Techline**.

AFTER REPAIR	If the computer has been replaced **(at the request of the Techline)**, initialise the electronic parking brake computer (see **Replacement of components**). Issue several braking and release commands to confirm the repair. Deal with any other faults.

GETtheMANUALS.org

DF047 PRESENT OR STORED	MANUAL CONTROL 1. DEF: No signal 2. DEF: Signal inconsistency 3. DEF: Short circuit 4. DEF: Lever fault

NOTES	**Priorities when dealing with a number of faults:** Deal with faults: **DF035 Undervoltage, DF055 Battery undervoltage and DF054 Battery voltage too high** first, if they are present or stored.
	Note: The fault does not usually come from the electronic parking brake computer. The fault is only stored after the brakes have been applied 3 times with the control level.
	Conditions for applying the fault finding procedure to a stored fault: Deal with the fault as if it were present.
	Only for Vdiag 08, 0C and 0D: **If there is a stored fault, refer to the statuses and parameters when it appears.** Explanation of counters: see **Introduction**. If the fault is stored and **PR018 = 0** and **PR022 > 25** clear the fault: do not take this fault into account. If the fault is stored and **PR019 < 3**, clear the fault: do not take this fault into account.

Using the diagnostic tool (**PARKING** sub-function), check the operation of the parking brake control lever. With the ignition switched on, statuses **ET008, ET009** and **ET010** should operate as follows:

	ET008 "Engagement switch position"	**ET009 "Redundant braking switch position"**	**ET010 "Release switch position"**
Lever **at rest**	**INACTIVE**	**INACTIVE**	**RELEASED**
Lever **pulled slightly (3 mm travel)**	**ACTIVE**	**INACTIVE**	**RELEASED**
Lever **pulled to end of travel**	**ACTIVE**	**ACTIVE**	**RELEASED**
Lever **pulled and release switch pressed**	**ACTIVE**	**ACTIVE**	**PRESSED**

AFTER REPAIR	If the computer has been replaced **(at the request of the Techline)**, initialise the electronic parking brake computer (see **Replacement of components**). Issue several braking and release commands to confirm the repair. Deal with any other faults.

GETtheMANUALS.org

DF047 **CONTINUED**	

If the statuses do not operate as explained above, check the **connection and condition** of the parking brake control lever connector.
Repair if necessary.

With the parking brake control lever connector disconnected, check **for earth** on **track 2** of the lever connector (repair if necessary).
Also **check for a 5 V supply (4 V < X < 5 V)** on **track 7** of the lever connector.
If the supply is not present and the parking brake computer is correctly supplied (no other faults detected by the diagnostic tool), then contact the **Techline**.

Check **the condition and connection** of the electronic parking brake computer connectors and their clips (terminals).
Repair if necessary.

With the parking brake control lever connector disconnected, check the **insulation** (from earth and to**+ 12 V** and the insulation of the 4 wires from each other), **the continuity and absence of interference resistance** on the following connections:

Parking brake lever connector: **1216**		Electronic parking brake computer: **1217**
track 9	→	**track D2**
track 7	→	**track C2**
track 10	→	**track C3**
track 4	→	**track D3**

Repair if necessary.

With the parking brake control unit connector disconnected, check the **insulation** between **tracks C2** and **D2** of the computer. If the tracks are in short circuit, replace the lever (see **Replacement of components**, **Part A/ Procedure for replacing an electronic parking brake computer**) (see **MR405 (Espace IV) or MR395 (Laguna II) or MR370 (Scénic), Mechanical, 37B, Electronic parking brake, Lever: Removal - Refitting or MR353 (Vel Satis), Mechanical, 37B, Automatic parking brake, Lever**).

If the fault persists, contact the **Techline**.

AFTER REPAIR	If the computer has been replaced **(at the request of the Techline)**, initialise the electronic parking brake computer (see **Replacement of components**). Issue several braking and release commands to confirm the repair. Deal with any other faults.

GETtheMANUALS.org

DF048 PRESENT OR STORED	RELEASE SWITCH 1. DEF: Signal inconsistency

NOTES	**Priority when dealing with a number of faults:** Deal first with faults **DF003, DF004, DF028, DF029, DF035, DF041, DF042, DF043, DF047, DF050, DF054, DF055, DF057, DF058 and DF073** if they are present or stored.
	Conditions for applying the fault finding procedure to a stored fault: The fault is declared present after the ignition is switched on (forced **+ after ignition feed**, see **Introduction**) and a brake release request using the control lever.
	Special notes: The fault does not usually come from the electronic parking brake computer. 8 applications (in **2 seconds**) using the control lever without pressing the release switch causes the fault to appear as present. **Only for Vdiag 08, 0C and 0D:** **If there is a stored fault, refer to the statuses and parameters when it appears.** Explanation of counters: see **Introduction**. If the fault is stored and **PR018 = 0** and **PR022 > 25** clear the fault: do not take this fault into account. If the fault is stored and **PR019 < 3**, clear the fault: do not take this fault into account.

Using the diagnostic tool (**PARKING** sub-function), check the operation of the parking brake control lever.
With the ignition switched on, statuses **ET008, ET009** and **ET010** should operate as follows:

	ET008 "Engagement switch position"	**ET009 "Redundant braking switch position"**	**ET010 "Release switch position"**
Lever **at rest**	**INACTIVE**	**INACTIVE**	**RELEASED**
Lever **pulled slightly (3 mm travel)**	**ACTIVE**	**INACTIVE**	**RELEASED**
Lever **pulled to end of travel**	**ACTIVE**	**ACTIVE**	**RELEASED**
Lever **pulled and release switch pressed**	**ACTIVE**	**ACTIVE**	**PRESSED**

AFTER REPAIR	If the computer has been replaced **(at the request of the Techline)**, initialise the electronic parking brake computer (see **Replacement of components**). Issue several braking and release commands to confirm the repair. Deal with any other faults.

GETtheMANUALS.org

DF048 **CONTINUED**	

If the statuses do not operate as explained above, check the **connection and condition** of the parking brake control lever connector.
Repair if necessary.

With the parking brake control lever connector disconnected, check **for earth** on **track 2** of the lever connector.
Repair if necessary.

Check **the connections and condition** of the electronic parking brake computer connectors and their clips (terminals) and its intermediate connector (under front left-hand seat).

With the parking brake control lever connector disconnected, check the **insulation, continuity and absence of interference resistance** on the following connection:

Parking brake lever connector: **1216**		Electronic parking brake computer: **1217**
track 4	⟶	**track D3**

Repair if necessary.

If the fault is still present, **check the release switch.**
Lever in rest position: **insulation** between **tracks 2 and 4** of the lever,
Lever fully applied and release switch pressed: **continuity** between **tracks 2 and 4** of the lever.
Replace the parking brake control lever if it does not function as indicated (see **Replacement of components, Part A/ Procedure for replacing the electronic parking brake computer**) (see **MR405 (Espace IV) or MR395 (Laguna II) or MR370 (Scénic), Mechanical, 37B, Electronic parking brake, Lever: Removal - Refitting or MR353 (Vel Satis), Mechanical, 37B, Automatic parking brake, Lever**).

If the fault persists, contact the **Techline**.

AFTER REPAIR	If the computer has been replaced **(at the request of the Techline)**, initialise the electronic parking brake computer (see **Replacement of components**). Issue several braking and release commands to confirm the repair. Deal with any other faults.

GETtheMANUALS.org

DF049 PRESENT OR STORED	BRAKING 1. DEF: Inconsistent braking value 2. DEF: Normal brake application value not reached 3. DEF: Normal brake release value not reached 4. DEF: Insufficient braking force

NOTES	**Conditions for applying the fault finding procedure to a stored fault:** The fault is declared present after: – a braking command is issued **on a slope**.
	Priorities when dealing with a number of faults: Deal with faults: **DF046 Brake motor / cables connection, DF050 Mechanical seizure, DF035 Undervoltage, DF058 Parking brake motor current and DF055 Battery undervoltage** first if they are present or stored.

Check that the parking brake mechanical tensioning line is correct:
- that the parking brake cables are fitted correctly (refer to the repair procedure),
- that the parking brake cables are in good condition (not seized or deteriorated),
- that the rear brake callipers are correct, in good condition and operating correctly,
- that the rear brake pads are correct and in good condition.

Carry out the necessary repairs.

Using the **diagnostic tool** statuses screen, display parameter **PR003 Slope value**.
If the value displayed is not 0 degrees (± 1) on level ground, carry out slope initialisation again (actuator control mode menu).

Using the **diagnostic tool** parameters screen, display the following parameters: **PR005 Force setpoint** and **PR004 Measured force value**. These must show the various values recorded in the conformity check.

Clear the fault, switch off the ignition for **5 minutes** (vehicle doors and windows closed), switch the ignition back on and repeat a braking command **on a slope**.

If the fault reappears, switch off the ignition and disconnect the computer supply fuse (fuse **F23** of the engine fuse box, refer to the wiring diagram) for approximately **1 minute**.
Reconnect the fuse, switch the ignition on and establish dialogue with the computer. Apply the brake to check whether the fault recurs.

If the fault reappears despite the above tests, or if the parameter values are not within conformity check tolerances while the brake is applied, then contact your **Techline**.

AFTER REPAIR	Clear the fault memory. Follow the instructions to confirm repair. If the computer has been replaced (**at the request of the Techline**), initialise the electronic parking brake computer (see **Replacement of components**). Issue several braking and release commands to confirm the repair. Deal with any other possible faults.

GETtheMANUALS.org

DF049 PRESENT OR STORED	BRAKING 1. DEF: Inconsistent braking value 2. DEF: Normal brake application value not reached 3. DEF: Normal brake release value not reached 4. DEF: Insufficient braking force

NOTES	**Priorities when dealing with a number of faults:** Deal first with faults **DF003 (1.DEF; 2.DEF), DF004, DF028, DF029, DF041, DF042, DF043, DF050, DF055, DF057, DF058 and DF073**.
	Conditions for applying the fault finding procedure to a stored fault: The fault is declared present after the ignition is switched on (forced **+ after ignition feed**, see **Introduction**) and an application request **on a slope**.

1. DEF	***NOTES***	**Special notes:** The **1.DEF** code indicates an inconsistency between the measured force value (**PR004**) and the parking brake status (**ET030: Electronic parking brake operation** when there is a fault in the fault context). This fault can appear after disconnecting the battery (parking brake applied).

Check the context of the fault when the fault appears:
If **ET030** is **STATUS 5, STATUS 6, STATUS 7, STATUS 8, STATUS 9 or STATUS 10** and if **PR004** is greater than **450 N** and if **PR012 Vehicle speed** is **0 mph (0 km/h)** when the fault appears: – check to see if the battery has been disconnected, if it has, the appearance of this fault is normal, clear the fault, – if not, check the computer supply voltage and the battery. Repair if necessary. If the fault persists, contact the **Techline**.
If **ET030** is **STATUS 5, STATUS 6, STATUS 7** and if **PR004** is less than **450 N** and if **PR012 Vehicle speed** is less than **3 mph (5 km/h)** when the fault appears: – Check for traces of heating on the brakes: – Check that the pads have returned correctly to the rest position. – Check that the small lever has sufficient return force. – Check that there is no friction or points of resistance on the cables. – If there is no indication of any defective operation of these components and if **PR019 < 3 and PR022 > 25 and PR018 < 15**, then clear the fault. – If not, contact the **Techline**.
If the fault is still present, contact the **Techline**.

AFTER REPAIR	If the computer has been replaced **(at the request of the Techline)**, initialise the electronic parking brake computer (see **Replacement of components**). Issue several braking and release commands to confirm the repair. Deal with any other faults.

GETtheMANUALS.org

DF049 **CONTINUED 1**	

2. DEF	***NOTES***	**Special notes:** The specification **2.DEF** mainly comes from a fault with the electrical power supply, braking application travel or the internal force sensor.

If this fault appears after the parking brake has been replaced:
- Check the conformity of the parking brake fitting.
- Check that the battery voltage **PR001** is greater than **12.5 V**.
- Clear the fault and restart the procedure for fitting the parking brake: see **Replacement of components**.

Check the fault context when the fault appears: if the battery voltage **PR001** is less than **9 V** when the fault appears, then:
- Check the supply line and that the resistance is less than **150 mΩ**.
- If there is no sign of a fault on the supply line and if **PR019 < 3** and **PR022 > 25** and **PR018 < 15** then clear the fault.

Check the fault context when the fault appears: If **ET028 Brake switch signal** is **PRESSED,** then:
- If **PR019 < 3** and **PR022 > 25** and **PR018 < 15**, then clear the fault.
- The fault can be caused when the user depresses the brake pedal **hard**, when the parking brake is being applied. If this is the case, clear the fault.

If there is a **loud** noise when applying, when maximum braking is requested, then the cause may be mechanical.

Check that the parking brake mechanical tensioning line is correct:
- Parking brake cables correctly fitted.
- Good condition of the parking brake cables (no seizing or deterioration).
- Conformity, condition and proper functioning of the rear brake callipers.
- Condition and conformity of rear brake pads.
- Conformity of rear brakes bleeding.

Carry out the necessary repairs.

Using the **diagnostic tool (PARKING** sub-function), display the parameters **PR005 Force setpoint** and **PR004 Measured force value**. These must have the various values recorded in the conformity check.

If the fault is still present, contact the **Techline**.

AFTER REPAIR	If the computer has been replaced **(at the request of the Techline)**, initialise the electronic parking brake computer (see **Replacement of components**). Issue several braking and release commands to confirm the repair. Deal with any other faults.

GETtheMANUALS.org

DF049 **CONTINUED 2**	

3. DEF ***4. DEF***	***NOTES***	**Special notes:** The specification **3.DEF** mainly comes from a fault with the electrical power supply or the internal force sensor. The **4.DEF** code is mainly generated by an electrical supply fault or an internal fault (motor, sensor, etc.). It indicates that the parking brake is neither applied or released.

If the fault persists, contact the **Techline**.

AFTER REPAIR	If the computer has been replaced **(at the request of the Techline)**, initialise the electronic parking brake computer (see **Replacement of components**). Issue several braking and release commands to confirm the repair. Deal with any other faults.

GETtheMANUALS.org

DF050 PRESENT OR STORED	MECHANICAL SEIZURE

NOTES	**Priorities when dealing with a number of faults:** Deal first with faults **DF055 Battery voltage too low, DF046 Brake motor/cables connection, DF042 Force sensor and DF035 Undervoltage** if they are present or stored.
	Conditions for applying fault finding procedures to stored faults: Deal with the fault as if it were present.

Check that the parking brake mechanical tensioning line is correct:
- Parking brake cables correctly fitted.
- Good condition of the parking brake cables (no seizing or deterioration).
- Conformity, condition and correct operation of the brake callipers.

Carry out the necessary repairs.

Check the brake callipers.
Carry out the necessary repairs.

If the fault is still present, contact the **Techline** without clearing the faults.

AFTER REPAIR	If the computer has been replaced **(at the request of the Techline)**, initialise the electronic parking brake computer (see **Replacement of components**). Issue several braking and release commands to confirm the repair. Deal with any other faults.

GETtheMANUALS.org

DF051 PRESENT OR STORED	SYSTEM FAULT AFTER COMPUTER REPLACEMENT

NOTES	**Special notes:** This fault indicates a malfunction due to not following procedures correctly: replacement or reconfiguration of the electronic parking brake computer was carried out with a present fault.
	Conditions for applying the fault finding procedure to a stored fault: Deal with the fault as if it were present.

Using the **diagnostic tool**, **run fault finding on the electronic parking brake computer**. Deal with other present or stored faults first. Carry out any necessary repairs. Clear the fault.
If no fault is displayed on the **diagnostic tool**, **carry out a conformity check** to check the conformity of the parking brake system.
If the conformity check and fault finding with the **diagnostic tool** have not enabled the fault to be solved (see **Introduction**) for **fault warning light management**, to find out which components may be causing the malfunction.
If the fault persists, contact the **Techline**.

AFTER REPAIR	If the computer has been replaced **(at the request of the Techline)**, initialise the electronic parking brake computer (see **Replacement of components**). Issue several braking and release commands to confirm the repair. Deal with any other faults.

GETtheMANUALS.org

DF052 PRESENT OR STORED	MULTIPLEX NETWORK 1. DEF: Problem receiving multiplex frames by the parking brake computer. The computer is not receiving any multiplex signals or else two computers are not communicating with the parking brake computer

NOTES	**Priorities when dealing with a number of faults:** Deal first with faults **DF003 (1.DEF; 2.DEF), DF004, DF028, DF029, DF041, DF042, DF043, DF050, DF055, DF057, DF058 and DF073**.
	Deal with any faults on the multiplex network first (see 88B, Multiplexing).
	Conditions for applying the fault finding procedure to a stored fault: Apply this fault finding procedure if the fault reappears as present after the ignition has been switched on (forced **+ after ignition feed**, see **Introduction**).
	Special notes: This fault indicates either a complete absence of multiplex signal transmission (no inconsistency) to the parking brake control unit, or no multiplex signal transmission from two computers (the continuity of the multiplex network lines may be correct, but if two computers fail to respond, this fault appears). The fault does not usually come from the electronic parking brake computer. **Note:** Using another battery for a boost when starting may trigger this fault. **Only for Vdiag 08, 0C and 0D:** **If there is a stored fault, refer to the statuses and parameters when it appears.** Explanation of counters: see **Introduction**. If the fault is stored and **PR018 = 0** and **PR022 > 25** clear the fault: do not take this fault into account.

AFTER REPAIR	If the computer has been replaced **(at the request of the Techline)**, initialise the electronic parking brake computer (see **Replacement of components**). Issue several braking and release commands to confirm the repair. Deal with any other faults.

GETtheMANUALS.org

DF052 **CONTINUED**	

Check that an additional booster battery has not been used when starting, if this is the case, this fault may appear.
Use the **diagnostic tool** to carry out a **multiplex system test**. This check ensures that the various multiplex system connections are correct and finds any faulty segments. Carry out any necessary repairs.
If the multiplex system test has not made it possible to find the defective connection, disconnect the electronic parking brake computer connector to check it is in **good condition** and check the condition of the clips (terminals) and in particular the clips for **tracks A2 and A3.** Replace the clips if necessary.
With the electronic parking brake computer connector disconnected, check **the insulation, continuity and the absence of interference resistance** on the connections between tracks **A2** and **A3** of the electronic parking brake computer and the following computers: – anti-lock braking system (see diagram of the various computers), – injection (see diagram of the different computers), – automatic transmission (see diagram of the different computers), – UCH (see diagram of the different computers), – Protection and Switching Unit (see diagram of the different computers). Repair if necessary.
If the fault persists, contact the **Techline**.

AFTER REPAIR	If the computer has been replaced **(at the request of the Techline)**, initialise the electronic parking brake computer (see **Replacement of components**). Issue several braking and release commands to confirm the repair. Deal with any other faults.

GETtheMANUALS.org

DF054 PRESENT OR STORED	BATTERY VOLTAGE TOO HIGH 1. DEF: Battery voltage too high

NOTES	**Priorities when dealing with a number of faults:** Deal first with faults **DF003 (1.DEF; 2.DEF), DF004, DF028, DF029, DF041, DF042, DF043, DF050, DF057, DF058 and DF073**.
	Conditions for applying the fault finding procedure to a stored fault: Apply this fault finding procedure if the fault appears as present again after the ignition has been switched on (forced **+ after ignition feed**, see **Introduction**).
	Special notes: The fault does not usually come from the electronic parking brake computer. This fault appears as present if the computer supply voltage is greater than **16.5 V**, and becomes stored when the voltage goes back down below **15.7 V**. **Note:** Using another battery for a boost when starting may trigger this fault. **Only for Vdiag 08, 0C and 0D.** **If there is a stored fault, refer to the statuses and parameters when it appears.** Explanation of counters: see **Introduction**. If the fault is stored and **PR018 = 0** and **PR022 > 25**, clear the fault: do not take this fault into account.

Check the charging circuit: the alternator should not supply a voltage of less than **+ 12 V** or greater than **+ 14.4 V** (engine at idle speed). Check the alternator and the regulator. Carry out the necessary repairs.
If the fault is still present, check that no electrical system using the same supply fuse as the electronic parking brake computer is faulty.
If the fault persists, contact the **Techline**.

AFTER REPAIR	If the computer has been replaced **(at the request of the Techline)**, initialise the electronic parking brake computer (see **Replacement of components**). Issue several braking and release commands to confirm the repair. Deal with any other faults.

GETtheMANUALS.org

DF055 PRESENT OR STORED	BATTERY UNDERVOLTAGE 1. DEF: Battery voltage too low 2. DEF: Electronic parking brake reset when vehicle being driven

1. DEF	***NOTES***	**Special notes:** The fault does not usually come from the electronic parking brake computer. This fault appears as present if the computer supply voltage is less than **10.3 V**, and becomes stored once the voltage rises back above **10.5 V**. **Only for Vdiag 08, 0C and 0D:** **If there is a stored fault, refer to the statuses and parameters when it appears.** Explanation of counters: see **Introduction**. If the fault is stored and **PR018 = 0** and **PR022 > 25**, clear the fault: do not take this fault into account.
		Note: This fault may appear if starting is very difficult.
		Conditions for applying the fault finding procedure to a stored fault: Apply this fault finding procedure if the fault reappears as present after the ignition has been switched on (forced **+ after ignition feed**, see **Introduction**).

2. DEF	***NOTES***	**Note:** This fault only affects Vdiag 0D.
		Priorities when dealing with a number of faults: Deal first with faults **DF046 Brake motor/cables connection, DF042 Force sensor, DF035 Undervoltage, DF041 Slope sensor, DF049 Brake application, DF054 Battery voltage too high and DF055 Battery undervoltage** if they are present or stored. If none of these faults is present or stored, the parking brake computer is not normally the cause.

AFTER REPAIR	If the computer has been replaced **(at the request of the Techline)**, initialise the electronic parking brake computer (see **Replacement of components**). Issue several braking and release commands to confirm the repair. Deal with any other faults.

GETtheMANUALS.org

DF055 **CONTINUED**	

2. DEF	***NOTES***	**Special notes:** This fault is generated after the automatic parking brake is switched on whilst driving or following an internal reset. With the anti-lock braking system, this detection is active at **> 0.6 mph (> 1 km/h)**, otherwise the multiplex signal emitted by the injection computer must be 1.
		Note: The driver is only informed of this fault after 16 successive detections. This fault may be due to battery disconnections or vehicle supply faults, in which case it is associated with fault 1.DEF (battery voltage too low) dealt with previously.

If the frequency counter (**PR016**) > 3 and if the onboard network (battery, wiring) analysis does not bring up any present or stored fault under battery voltage, contact the **Techline**.

Check that the battery, battery - starter - alternator connection lead, battery earth - chassis lead and the chassis earth - engine and transmission assembly lead are in **good condition**.
Repair if necessary.

Check the charging circuit: the alternator should not supply a voltage of less than **+ 12 V** or greater than **+ 14.4 V** (engine at idle speed).
Carry out the necessary repairs.

track H4
(except Laguna II, Vel Satis and Espace IV) → **+ 12 V**
track G4

track H2
(except Laguna II, Vel Satis and Espace IV) → **earth**
track G2

Repair if necessary (see the vehicle wiring diagram).

If the fault is still present, check that no electrical system using the same supply fuse as the electronic parking brake computer is faulty.

If the fault persists, contact the **Techline**.

AFTER REPAIR	If the computer has been replaced **(at the request of the Techline)**, initialise the electronic parking brake computer (see **Replacement of components**). Issue several braking and release commands to confirm the repair. Deal with any other faults.

GETtheMANUALS.org

DF056 PRESENT OR STORED	BRAKE CABLES INCORRECTLY FITTED 1. DEF: Incorrect brake cable fitting detected

NOTES	**Priorities when dealing with a number of faults:** Deal first with faults **DF003 (1.DEF; 2.DEF), DF004, DF028, DF029, DF041, DF042, DF043, DF050, DF057, DF058 and DF073**.
	Special notes: This fault only appears during configuration of the parking brake. The fault does not usually come from the electronic parking brake computer.
	Conditions for applying the fault finding procedure to a stored fault: Deal with the fault as if it were present.

Check that the battery voltage **PR001** is above **12.5 V**.

Check that the mechanical tensioning line is correctly fitted: cables, connections, callipers.
If the parking brake cables are damaged (particularly at the calliper collars), replace both cables (see **MR405 (Espace IV) or MR395 (Laguna II) or MR370 (Scénic), Mechanical, 37A, Mechanical component controls, Parking brake cables: Removal - Refitting or MR353 (Vel Satis), Mechanical, 37B, Automatic parking brake, Brake cables**).
Start the electronic parking brake computer configuration process again: run command **VP011 Computer calibration and initialisation** (see **Replacement of components**).

If the fault persists, contact the **Techline**.

AFTER REPAIR	If the computer has been replaced **(at the request of the Techline)**, initialise the electronic parking brake computer (see **Replacement of components**). Issue several braking and release commands to confirm the repair. Deal with any other faults.

GETtheMANUALS.org

DF057 PRESENT OR STORED	COMPUTER INTERNAL TEMPERATURE SENSOR 1. DEF: Temperature sensor outside correct range (internal fault) 2. DEF: Internal electronic fault

NOTES	**Conditions for applying the fault finding procedure to a stored fault:** Apply the fault finding procedure even if the fault is **stored**.
	Special notes: Before replacing an electronic parking brake computer, **save the data from the old computer** (for vehicles fitted with a manual gearbox). For this operation, (see **Replacement of components**).

Contact the **Techline** without clearing the faults.

AFTER REPAIR	If the computer has been replaced **(at the request of the Techline)**, initialise the electronic parking brake computer (see **Replacement of components**). Issue several braking and release commands to confirm the repair. Deal with any other faults.

GETtheMANUALS.org

DF058 PRESENT OR STORED	PARKING BRAKE MOTOR CURRENT 1. DEF: Inconsistent current value

NOTES	**Conditions for applying the fault finding procedure to a stored fault:** Apply the fault finding procedure even if the fault is **stored**.
	Special notes: Before replacing an electronic parking brake computer, **save the data from the old computer** (for vehicles fitted with a manual gearbox). For this operation, (see **Replacement of components**).

Check to see if battery polarity has been inverted, if this is the case, clear the fault and check that the electronic parking brake computer is operating correctly (see **System operation**).
If the fault is still present, contact the **Techline** without clearing the fault.

AFTER REPAIR	If the computer has been replaced **(at the request of the Techline)**, initialise the electronic parking brake computer (see **Replacement of components**). Issue several braking and release commands to confirm the repair. Deal with any other faults.

GETtheMANUALS.org

DF059 PRESENT OR STORED	NO PROTECTION AND SWITCHING UNIT MULTIPLEX SIGNAL 1. DEF: Multiplex signals absent or values invalid (fault with the computer generating the signal or multiplex line connection fault)

NOTES	**Priority when dealing with a number of faults:** Deal with faults **DF055 Battery undervoltage and DF052 Multiplex network** first if they are present or stored.
	Deal with any Protection and Switching Unit computer faults first. The fault does not usually come from the electronic parking brake computer.
	Conditions for applying the fault finding procedure to a stored fault: Apply this fault finding procedure if the fault reappears as present or stored after it has been cleared, the ignition has been switched back on (forced **+ after ignition feed**: see **Introduction**), and the parking brake is released then applied using the control lever.
	Special notes: This fault only relates to multiplex signals received from the **Protection and Switching Unit** computer. This fault indicates either that there is no signal or that the signals transmitted are inconsistent. **Note:** If a multiplex line fault such as this is present, the electronic parking brake computer may lose all or some of its assisted parking functions (application and release).
	If there is a stored fault, refer to the statuses and parameters when it appears. Explanation of counters: see **Introduction** section. If the fault is stored and **PR018 = 0** and **PR022 > 25**, clear the fault: do not take this fault into account.

AFTER REPAIR	If the computer has been replaced **(at the request of the Techline)**, initialise the electronic parking brake computer (see **Replacement of components**). Issue several braking and release commands to confirm the repair. Deal with any other faults.

GETtheMANUALS.org

DF059 **CONTINUED**	

Use the diagnostic tool to carry out a **multiplex system test**. This check ensures that the various multiplex system connections are correct and finds any faulty segments. Carry out any necessary repairs.
If the multiplex network test did not find the faulty connection, carry out **a conformity check** to check that the status from the Protection and Switching Unit computer is present and correct (**ET016, PR015, PR017**). Check the gearbox contacts. If the status and parameters shown here are not correct, carry out fault finding on the **Protection and Switching Unit** (see **87G, Engine compartment connection unit**).
If the fault is still present, disconnect the Protection and Switching Unit computer connector to check that the connector and its clips (terminals) are in **good condition**, especially the **multiplex track** clips (see the wiring diagram of the **Protection and Switching Unit** fitted to the vehicle). Replace the clips if necessary.
If the fault persists, contact the **Techline**.

AFTER REPAIR	If the computer has been replaced **(at the request of the Techline)**, initialise the electronic parking brake computer (see **Replacement of components**). Issue several braking and release commands to confirm the repair. Deal with any other faults.

GETtheMANUALS.org

DF073 PRESENT OR STORED	COMPUTER 1. DEF: Internal electrical fault

NOTES	**Priority when dealing with a number of faults:** This fault must be dealt with first.
	Conditions for applying the fault finding procedure to a stored fault: Deal with this fault as if it were present.
	Special notes: The electronic parking brake computer has detected a fault during standby mode (ignition off, vehicle doors and windows closed and lever warning light off) Before replacing an electronic parking brake computer, **save the data from the old computer** (for vehicles fitted with a manual gearbox). For this operation, (see **Replacement of components**).

Contact the **Techline**, without clearing the fault.

AFTER REPAIR	If the computer has been replaced **(at the request of the Techline)**, initialise the electronic parking brake computer (see **Replacement of components**). Issue several braking and release commands to confirm the repair. Deal with any other faults.

GETtheMANUALS.org

NOTES	Only carry out this conformity check after carrying out a **complete check** using the diagnostic tool. **Application conditions: ignition on (forced + after ignition, see Introduction)** **Note:** **The interpretation of these statuses and parameters is only valid with the ignition switched on,** the statuses and parameters displayed in blue on the diagnostic tool is information supplied by other computers, which are transmitted via the multiplex network. If these variables display inconsistent values, make sure that the multiplex system test has not shown up any faulty connections. **Repair the faulty multiplex connections before looking for a possible problem with the signals.** Each sub-function in this test is associated with a **Fault finding chart**. **Special notes:** The diagnostic tool may display the message **Computer busy** when displaying statuses and parameters. This message is displayed when the parking brake is applying or releasing the brake, because the computer gives priority to controlling the motor before transmitting variables. If this message is displayed, exit the current screen and then return to it.

MAIN SCREEN

Order	Function	Parameter or Status Checked or Action	Display and notes	Fault finding
1	Parking brake operation status	**ET024:** System operation	**CUSTOMER MODE**	If the status displays **FACTORY MODE**, the computer is **not operational**. To enter **CUSTOMER MODE**, initialise the computer again, by running command **VP011 Computer calibration and initialisation** (see **Replacement of components**).
2	Computer electrical supply	**ET001:** + After ignition feed	**Ignition off: ABSENT** **Ignition on: PRESENT**	In the event of a fault on this status, refer to the interpretation of status **ET001: + after ignition supply.**
		PR001: Battery voltage	**9.6 V < PR001 < 15 V**	If the value of the parameter is not within this range, check **the insulation, continuity and the absence of interference resistance** on the computer supplies and earths (see wiring diagram). If the fault is still present, carry out **fault finding on the charging circuit** (see **Technical Note 6014A, Checking the charging circuit**).

GETtheMANUALS.org

NOTES	Only carry out this conformity check after carrying out a **complete check** using the diagnostic tool. **Application conditions: ignition on (forced + after ignition, see Introduction)** **Note:** **The interpretation of these statuses and parameters is only valid with the ignition switched on,** the statuses and parameters displayed in blue on the diagnostic tool is information supplied by other computers, which are transmitted via the multiplex network. If these variables display inconsistent values, make sure that the multiplex system test has not shown up any faulty connections. **Repair the faulty multiplex connections before looking for a possible problem with the signals.** Each sub-function in this test is associated with a **Fault finding chart**. **Special notes** The diagnostic tool may display the message **Computer busy** when displaying statuses and parameters. This message is displayed when the parking brake is applying or releasing the brake, because the computer gives priority to controlling the motor before transmitting variables. If this message is displayed, exit the current screen and then return to it.

MAIN SCREEN (CONTINUED 1)

Order	Function	Parameter or Status Checked or Action	Display and notes	Fault finding
3	Electronic parking brake	**PR005:** Force setting **PR004:** Measured force value	In rest position: **X = 0 N** When applying the brake on a level surface: **400 < X < 550 N** When fully applied (lever fully pulled for 2 seconds) on a level surface: **1100 < X < 1150 N** **Note**: **depressing the brake pedal once** when the parking brake is applied changes the measured force value (change in the tension of the brake cables) and the parking brake may be over-applied. **Interpretation of these parameters is only valid without any pressure on the brake pedal.**	The difference between the reference and measured values must not be more than - **50 N or + 100 N**. If the measured value does not reach or exceeds the reference value (mechanical or electrical fault with the control), the electronic parking brake computer will detect a fault (**DF025 Vehicle movement with maximum application, DF049 Brake application** or **DF050 Mechanical jamming**). If one of these three faults is displayed by the diagnostic tool, use the relevant interpretation.

GETtheMANUALS.org

NOTES	Only carry out this conformity check after carrying out a **complete check** using the diagnostic tool. **Application conditions: ignition on (forced + after ignition, see Introduction)** **Note:** **The interpretation of these statuses and parameters is only valid with the ignition switched on,** the statuses and parameters displayed in blue on the diagnostic tool is information supplied by other computers, which are transmitted via the multiplex network. If these variables display inconsistent values, make sure that the multiplex system test has not shown up any faulty connections. **Repair the faulty multiplex connections before looking for a possible problem with the signals.** Each sub-function in this test is associated with a **Fault finding chart**. **Special notes** The diagnostic tool may display the message **Computer busy** when displaying statuses and parameters. This message is displayed when the parking brake is applying or releasing the brake, because the computer gives priority to controlling the motor before transmitting variables. If this message is displayed, exit the current screen and then return to it.

MAIN SCREEN (CONTINUED 2)

Order	Function	Parameter or Status Checked or Action	Display and Notes	Fault finding
	Electronic parking brake (continued)	**ET011:** Parking brake	No movement of the lever: **INACTIVE** When released: **Released** (while releasing, then **INACTIVE**). When applying the brake: **STATUS 1 Static braking** During emergency braking: **STATUS 2 Dynamic braking** (over 6 mph (10 km/h)). When the system is faulty: **DEFECTIVE**	If the status does not operate as specified, **refer to the interpretation** of fault **DF043 Parking brake motor**.

GETtheMANUALS.org

NOTES	Only carry out this conformity check after carrying out a **complete check** using the diagnostic tool. **Application conditions: ignition on (forced + after ignition, see Introduction)** **Note:** **The interpretation of these statuses and parameters is only valid with the ignition switched on,** the statuses and parameters displayed in blue on the diagnostic tool is information supplied by other computers, which are transmitted via the multiplex network. If these variables display inconsistent values, make sure that the multiplex system test has not shown up any faulty connections. **Repair the faulty multiplex connections before looking for a possible problem with the signals.** Each sub-function in this test is associated with a **Fault finding chart**. **Special notes** The diagnostic tool may display the message **Computer busy** when displaying statuses and parameters. This message is displayed when the parking brake is applying or releasing the brake, because the computer gives priority to controlling the motor before transmitting variables. If this message is displayed, exit the current screen and then return to it.

SUB FUNCTION: PARKING

Order	Function	Parameter or Status Checked or Action		Display and notes	Fault finding
1	Computer electrical supply	**ET001:**	+ After ignition feed	**Ignition off: ABSENT** **Ignition on: PRESENT**	In the event of a fault on this status, refer to the interpretation of status **ET001: + after ignition supply.**
		PR001:	Battery voltage	**9 V < X < 15 V**	In the event of a fault with this parameter, check **the insulation, continuity and the absence of interference resistance** on the computer supplies and earths (see wiring diagram). If the fault is still present, carry out **fault finding on the charging circuit** (see **Technical Note 6014A, Checking the charging circuit**).
		ET009:	Redundant braking switch position	Lever released: **INACTIVE** Lever pulled to the second contact (end of travel): **ACTIVE**	If the status does not operate as specified, **use the interpretation** of status **ET009 Redundant braking switch position**.
		ET010:	Release switch position	Lever in rest position **RELEASED** Lever fully pulled and releasing switch pressed: **PRESSED**	If the status does not operate as specified, **apply the interpretation** of status **ET010 Releasing switch position**.

GETtheMANUALS.org

NOTES	Only carry out this conformity check after carrying out a **complete check** using the diagnostic tool. **Application conditions: ignition on (forced + after ignition, see Introduction)** **Note:** **The interpretation of these statuses and parameters is only valid with the ignition switched on**, the statuses and parameters displayed in blue on the diagnostic tool is information supplied by other computers, which are transmitted via the multiplex network. If these variables display inconsistent values, make sure that the multiplex system test has not shown up any faulty connections. **Repair the faulty multiplex connections before looking for a possible problem with the signals.** Each sub-function in this test is associated with a **Fault finding chart**. **Special notes** The diagnostic tool may display the message **Computer busy** when displaying statuses and parameters. This message is displayed when the parking brake is applying or releasing the brake, because the computer gives priority to controlling the motor before transmitting variables. If this message is displayed, exit the current screen and then return to it.

SUB-FUNCTION: PARKING (CONTINUED 1)

Order	Function	Parameter or Status Checked or Action	Display and notes	Fault finding
2	Parking brake control lever	**ET008:** Braking switch position	Lever released: **INACTIVE** Lever pulled to the first contact (approximately 3 mm travel): **ACTIVE**	If the status does not operate as specified, **apply the interpretation** of status **ET008 Brake application switch position**.
		ET009: Redundant braking switch position	Lever released: **INACTIVE** Lever pulled to the second contact (end of travel): **ACTIVE**	If the status does not operate as specified, **use the interpretation** of status **ET009 Redundant braking switch position**.
		ET010: Release switch position	Lever in rest position **RELEASED** Lever fully applied and release switch pressed: **PRESSED**	If the status does not operate as specified, **apply the interpretation** of status **ET010 Releasing switch position**.

GETtheMANUALS.org

NOTES	Only carry out this conformity check after carrying out a **complete check** using the diagnostic tool. **Application conditions: ignition on (forced + after ignition, see Introduction)** **Note:** **The interpretation of these statuses and parameters is only valid with the ignition switched on**, the statuses and parameters displayed in blue on the diagnostic tool is information supplied by other computers, which are transmitted via the multiplex network. If these variables display inconsistent values, make sure that the multiplex system test has not shown up any faulty connections. **Repair the faulty multiplex connections before looking for a possible problem with the signals.** Each sub-function in this test is associated with a **Fault finding chart**. **Special notes** The diagnostic tool may display the message **Computer busy** when displaying statuses and parameters. This message is displayed when the parking brake is applying or releasing the brake, because the computer gives priority to controlling the motor before transmitting variables. If this message is displayed, exit the current screen and then return to it.

SUB-FUNCTION: PARKING (CONTINUED 2)

Order	Function	Parameter or Status Checked or Action	Display and notes	Fault finding
3	Parking brake assist	**PR005:** Force setting **PR004:** Measured force value	In rest position: **X = 0 N** When applying the brake on a level surface: **400 < X < 550 N** When fully applied (lever fully pulled for 2 seconds) on a level surface: **1100 < X < 1150 N** **Note: depressing the brake pedal once** when the parking brake is applied changes the measured force value (change in the tension of the brake cables) and the parking brake may be over-applied. **Interpretation of these parameters is only valid without any pressure on the brake pedal.**	The difference between the reference and measured values must not be more than - **50 N or + 100 N**. If the measured value does not reach or exceeds the reference value (mechanical or electrical fault with the control), the electronic parking brake computer will detect a fault (**DF025 Vehicle movement with maximum application, DF049 Brake application** or **DF050 Mechanical jamming**). If one of these three faults is displayed by the diagnostic tool, use the relevant interpretation.

GETtheMANUALS.org

NOTES	Only carry out this conformity check after carrying out a **complete check** using the diagnostic tool. **Application conditions: ignition on (forced + after ignition, see Introduction)** **Note:** **The interpretation of these statuses and parameters is only valid with the ignition switched on**, the statuses and parameters displayed in blue on the diagnostic tool is information supplied by other computers, which are transmitted via the multiplex network. If these variables display inconsistent values, make sure that the multiplex system test has not shown up any faulty connections. **Repair the faulty multiplex connections before looking for a possible problem with the signals.** Each sub-function in this test is associated with a **Fault finding chart**. **Special notes** The diagnostic tool may display the message **Computer busy** when displaying statuses and parameters. This message is displayed when the parking brake is applying or releasing the brake, because the computer gives priority to controlling the motor before transmitting variables. If this message is displayed, exit the current screen and then return to it.

SUB-FUNCTION: PARKING (CONTINUED 3)

Order	Function	Parameter or Status checked or Action	Display and Notes	Fault finding
		ET011: Parking brake	No movement of the lever: **INACTIVE** When released: **Released** (while releasing, then **INACTIVE**). When applying the brake: **STATUS 1 Static braking** During emergency braking: **STATUS 2 Dynamic braking** (over 6 mph (10 km/h)). When the system is faulty: **DEFECTIVE**	If the status does not operate as specified, **refer to the interpretation** of fault **DF043 Parking brake motor**.
4	Braking	**AC002:** Braking	**ACTIVE** or **INACTIVE**	
5	Release	**AC003:** Release	**ACTIVE** or **INACTIVE**	

GETtheMANUALS.org

NOTES	Only carry out this conformity check after carrying out a **complete check** using the diagnostic tool. **Application conditions: ignition on (forced + after ignition, see Introduction)** **Note:** **The interpretation of these statuses and parameters is only valid with the ignition switched on**, the statuses and parameters displayed in blue on the diagnostic tool is information supplied by other computers, which are transmitted via the multiplex network. If these variables display inconsistent values, check that the multiplex system test has not shown up any faulty connections. **Repair the faulty multiplex connections before looking for a possible problem with the signals.** Each sub-function in this test is associated with a **Fault finding chart**. **Special notes** The diagnostic tool may display the message **Computer busy** when displaying statuses and parameters. This message is displayed when the parking brake is applying or releasing the brake, because the computer gives priority to controlling the motor before transmitting variables. If this message is displayed, exit the current screen and then return to it.

SUB-FUNCTION: AUTOMATIC APPLICATION

Order	Function	Parameter or Status Checked or Action		Display and notes	Fault finding
1	Assisted braking configuration	**ET022:**	Automatic braking configuration	**WITH** or **WITHOUT**	Depending on the customer's request, the electronic parking brake computer may be configured **WITH** or **WITHOUT** assisted braking when the engine stops. Refer to the interpretation of status **ET022 Automatic braking configuration**.
2	Computer electrical supply	**ET001:**	+ After ignition feed	**Ignition off: ABSENT** **Ignition on: PRESENT**	In the event of a fault on this status, refer to the interpretation of status **ET001: + after ignition feed**.
3	Engine	**PR015:**	Engine speed	**0 rpm**	In the event of a fault with this parameter and these statuses, make sure that the injection computer is in fact sending signals (absence of faults **DF036 No injection multiplex transmission** and **DF052 Multiplex network**). If the fault is still present, run **fault finding** on the injection computer (see **13B, Diesel injection or 17B, Petrol injection**).
		ET019:	Engine	**STOPPED** Other possibilities depending on the operating status of the engine: **RUNNING** **- UNDER STARTER** **- STALLED**	

GETtheMANUALS.org

NOTES	Only carry out this conformity check after carrying out a **complete check** using the diagnostic tool. **Application conditions: ignition on (forced + after ignition, see Introduction)** **Note:** **The interpretation of these statuses and parameters is only valid with the ignition switched on**, the statuses and parameters displayed in blue on the diagnostic tool is information supplied by other computers, which are transmitted via the multiplex network. If these variables display inconsistent values, check that the multiplex system test has not shown up any faulty connections. **Repair the faulty multiplex connections before looking for a possible problem with the signals.** Each sub-function in this test is associated with a **Fault finding chart**. **Special notes** The diagnostic tool may display the message **Computer busy** when displaying statuses and parameters. This message is displayed when the parking brake is applying or releasing the brake, because the computer gives priority to controlling the motor before transmitting variables. If this message is displayed, exit the current screen and then return to it.

SUB-FUNCTION: AUTOMATIC APPLICATION (CONTINUED 1)

Order	Function	Parameter or Status Checked or Action	Display and notes	Fault finding
4	Wheel speeds	**PR012:** Vehicle speed	**X = 0 mph (km/h)**	In the event of a fault on this parameter, check that the anti-lock braking system computer is sending the signal correctly (absence of faults **DF037 No ABS multiplex signal** and **DF052 Multiplex network**). If the fault is still present, run **fault finding** on the anti-lock braking system computer (see **38C, Anti-lock braking system**).
5	Electronic parking brake	**ET011:** Parking brake	No movement of the lever: **INACTIVE** When released: **Released** (while releasing, then **INACTIVE**). When applying the brake: **STATUS 1 Static braking** During emergency braking: **STATUS 2 Dynamic braking** (over 6 mph (10 km/h)). When the system is faulty: **DEFECTIVE**	If the status does not operate as specified, **refer to the interpretation** of fault **DF043 Parking brake motor**.

GETtheMANUALS.org

NOTES	Only carry out this conformity check after carrying out a **complete check** using the diagnostic tool. **Application conditions: ignition on (forced + after ignition, see Introduction)** **Note:** **The interpretation of these statuses and parameters is only valid with the ignition switched on**, the statuses and parameters displayed in blue on the diagnostic tool is information supplied by other computers, which are transmitted via the multiplex network. If these variables display inconsistent values, check that the multiplex system test has not shown up any faulty connections. **Repair the faulty multiplex connections before looking for a possible problem with the signals.** Each sub-function in this test is associated with a **Fault finding chart**. **Special notes:** The diagnostic tool may display the message **Computer busy** when displaying statuses and parameters. This message is displayed when the parking brake is applying or releasing the brake, because the computer gives priority to controlling the motor before transmitting variables. If this message is displayed, exit the current screen and then return to it.

SUB FUNCTION: AUTOMATIC APPLICATION (CONTINUED 2)

Order	Function	Parameter or Status Checked or Action	Display and notes	Fault finding
	Electronic parking brake (continued)	**PR005:** Force setting	In rest position: **X = 0 N** When applying the brake on a level surface: **400 < X < 550 N** When fully applied (lever fully pulled for 2 seconds) on a level surface: **1100 < X < 1150 N** **Note:** **depressing the brake pedal once** when the parking brake is applied changes the measured value of the force (change in the tension of the brake cables) and the parking brake may be over-applied. **Interpretation of these parameters is only valid without any pressure on the brake pedal.**	The difference between the reference and measured values must not be more than **- 50 N or + 100 N**. If the measured value does not reach or exceeds the reference value (mechanical or electrical fault with the control), the electronic parking brake computer will detect a fault (**DF025 Vehicle movement with maximum application, DF049 Brake application** or **DF050 Mechanical jamming**). If one of these three faults is displayed by the diagnostic tool, use the relevant interpretation.
6	Vehicle incline	**PR004:** Measured force value	On horizontal ground the value is: **- 2 d° < X < + 2 d°** Possible values according to the slope: **- 25 d° < X < + 25 d°**	On level ground, if the value displayed is not **0 d° ± 2**: Refer to the interpretation of parameter **PR003 Slope value**
		PR003: Slope value		

GETtheMANUALS.org

NOTES	Only carry out this conformity check after carrying out a **complete check** using the diagnostic tool. **Application conditions: ignition on (forced + after ignition, see Introduction)** **Note:** **The interpretation of these statuses and parameters is only valid with the ignition switched on**, the statuses and parameters displayed in blue on the diagnostic tool is information supplied by other computers, which are transmitted via the multiplex network. If these variables display inconsistent values, check that the multiplex system test has not shown up any faulty connections. **Repair the faulty multiplex connections before looking for a possible problem with the signals.** Each sub-function in this test is associated with a **Fault finding chart**. **Special notes** The diagnostic tool may display the message **Computer busy** when displaying statuses and parameters. This message is displayed when the parking brake is applying or releasing the brake, because the computer gives priority to controlling the motor before transmitting variables. If this message is displayed, exit the current screen and then return to it.

SUB-FUNCTION: AUTOMATIC RELEASE

Order	Function	Parameter or Status Checked or Action		Display and notes	Fault finding
1	Assisted release configuration	**ET023:**	Automatic release configuration	**WITH** or **WITHOUT**	Depending on the customer's request, the electronic parking brake computer may be configured **WITH** or **WITHOUT** assisted brake release when the vehicle moves forward. Refer to the interpretation of status **ET023 Automatic release configuration**.
2	Computer electrical supply	**ET001:**	+ After ignition feed	**Ignition off: ABSENT** **Ignition on: PRESENT**	In the event of a fault on this status, refer to the interpretation of status **ET001: + after ignition feed**.

GETtheMANUALS.org

NOTES	Only carry out this conformity check after carrying out a **complete check** using the diagnostic tool. **Application conditions: ignition on (forced + after ignition, see Introduction)** **Note:** **The interpretation of these statuses and parameters is only valid with the ignition switched on**, the statuses and parameters displayed in blue on the diagnostic tool is information supplied by other computers, which are transmitted via the multiplex network. If these variables display inconsistent values, check that the multiplex system test has not shown up any faulty connections. **Repair the faulty multiplex connections before looking for a possible problem with the signals.** Each sub-function in this test is associated with a **Fault finding chart**. **Special notes** The diagnostic tool may display the message **Computer busy** when displaying statuses and parameters. This message is displayed when the parking brake is applying or releasing the brake, because the computer gives priority to controlling the motor before transmitting variables. If this message is displayed, exit the current screen and then return to it.

SUB-FUNCTION: AUTOMATIC RELEASE (CONTINUED 1)

Order	Function	Parameter or Status Checked or Action		Display and notes	Fault finding
3	Vehicles fitted with a manual gearbox	**ET016:**	Manual gearbox gear lever position.	**Neutral: NEUTRAL** or **Gear engaged: NOT IN NEUTRAL**	In the event of a fault with these statuses, check that the UCH is sending signals correctly (absence of fault **DF039 No UCH multiplex signal**) If the fault is still present, run **fault finding** on the UCH (see **87B, Passenger compartment connection unit**).
		ET017:	Reverse gear engaged	**YES** (lever in reverse gear). **NO** (for other gear lever positions).	
4	Vehicles fitted with an automatic gearbox	**ET018:**	Automatic gearbox lever position	**Depending on the lever position:** **P, R, N, D** or **Manual mode** (manual mode = sequential gear selection position).	In the event of a fault with these statuses, check that the computers concerned are sending signals correctly (absence of fault **DF038 No automatic transmission multiplex signal and DF052 Multiplex network**) If the fault is still present run **fault finding on** the computer concerned.
		ET017:	Reverse gear engaged	**YES** (selector lever in **R**). **NO** (for other gear lever positions).	

GETtheMANUALS.org

NOTES	Only carry out this conformity check after carrying out a **complete check** using the diagnostic tool. **Application conditions: ignition on (forced + after ignition, see Introduction)** **Note:** **The interpretation of these statuses and parameters is only valid with the ignition switched on**, the statuses and parameters displayed in blue on the diagnostic tool is information supplied by other computers, which are transmitted via the multiplex network. If these variables display inconsistent values, check that the multiplex system test has not shown up any faulty connections. **Repair the faulty multiplex connections before looking for a possible problem with the signals.** Each sub-function in this test is associated with a **Fault finding chart**. **Special notes** The diagnostic tool may display the message **Computer busy** when displaying statuses and parameters. This message is displayed when the parking brake is applying or releasing the brake, because the computer gives priority to controlling the motor before transmitting variables. If this message is displayed, exit the current screen and then return to it.

SUB-FUNCTION: AUTOMATIC RELEASE (CONTINUED 2)

Order	Function	Parameter or Status Check or Action	Display and Notes	Fault finding
5	Door opening switches	**ET014:** Door opening switches	**OPEN:** driver's door open. **CLOSED:** driver's door closed. **Note:** This status only works with the driver's door.	If the status is not operating as shown, check that the UCH is correctly sending the signal (absence of faults **DF039 No UCH multiplex signal** and **DF052 Multiplex network**). If the status operates with the passenger door but not the driver's door, reinitialise the computer by running command **VP011 Computer calibration and initialisation** (see **Replacement of components**) to configure the correct type of steering (right or left-hand drive). If the fault is still present, run **fault finding** on the UCH (see **87B, Passenger compartment connection unit**).

GETtheMANUALS.org

NOTES	Only carry out this conformity check after carrying out a **complete check** using the diagnostic tool. **Application conditions: ignition on (forced + after ignition, see Introduction)** **Note:** **The interpretation of these statuses and parameters is only valid with the ignition switched on**, the statuses and parameters displayed in blue on the diagnostic tool is information supplied by other computers, which are transmitted via the multiplex network. If these variables display inconsistent values, check that the multiplex system test has not shown up any faulty connections. **Repair the faulty multiplex connections before looking for a possible problem with the signals.** Each sub-function in this test is associated with a **Fault finding chart**. **Special notes:** The diagnostic tool may display the message **Computer busy** when displaying statuses and parameters. This message is displayed when the parking brake is applying or releasing the brake, because the computer gives priority to controlling the motor before transmitting variables. If this message is displayed, exit the current screen and then return to it.

SUB-FUNCTION: AUTOMATIC RELEASE (CONTINUED 3)

Order	Function	Parameter or Status Checked or Action	Display and notes	Fault finding
6	Clutch pedal	**PR006:** Clutch pedal position	No load position: **0% < X < 20%** --- Pedal fully depressed: Right-hand drive: **50 < X < 70%** Left-hand drive: **70 < X < 90%**	In the event of a fault, check that the potentiometer is fitted correctly. If the fault is still present, **consult the interpretation** of fault **DF015 Clutch position sensor circuit.** **Note:** The clutch pedal operating values differ according to the type of steering.
7	Accelerator pedal	**PR017:** Accelerator pedal position	No load position: **0 < X < 10%** --- Pedal depressed fully (depressed past resistance point): **110 < X < 120%** **Invalid value: 118%** (this value means that the signal is not being received, e.g.: ignition switched off).	In the event of a fault with this parameter, check that the injection computer is correctly sending the signal (absence of fault **DF036 No injection multiplex signal**) If the fault is still present, run **fault finding** on the injection computer (see **13B, Diesel injection or 17B, Petrol injection**). **Note: the value of this parameter depends on the injection fitted to the vehicle. The values noted in this check are therefore only average values (refer to the injection conformity check).**

GETtheMANUALS.org

NOTES	Only carry out this conformity check after carrying out a **complete check** using the diagnostic tool. **Application conditions: ignition on (forced + after ignition, see Introduction)** **Note:** **The interpretation of these statuses and parameters is only valid with the ignition switched on**, the statuses and parameters displayed in blue on the diagnostic tool is information supplied by other computers, which are transmitted via the multiplex network. If these variables display inconsistent values, check that the multiplex system test has not shown up any faulty connections. **Repair the faulty multiplex connections before looking for a possible problem with the signals.** Each sub-function in this test is associated with a **Fault finding chart**. **Special notes** The diagnostic tool may display the message **Computer busy** when displaying statuses and parameters. This message is displayed when the parking brake is applying or releasing the brake, because the computer gives priority to controlling the motor before transmitting variables. If this message is displayed, exit the current screen and then return to it.

SUB-FUNCTION: AUTOMATIC RELEASE (CONTINUED 4)

Order	Function	Parameter or Status Check or Action	Display and Notes	Fault finding
8	Engine	**PR015:** Engine speed	**0 rpm**	In the event of a fault with this parameter and these statuses, make sure that the injection computer is in fact sending signals (absence of faults **DF036 No injection multiplex transmission** and **DF052 Multiplex network**). If the fault is still present, run **fault finding** on the injection computer (see **13B, Diesel injection or 17B, Petrol injection**).
		ET019: Engine	**STOPPED** Other possibilities depending on the operating status of the engine: **- RUNNING** **- UNDER STARTER** **- STALLED** (in the event where the engine is not stopped in the normal way)	

GETtheMANUALS.org

NOTES	Only carry out this conformity check after carrying out a **complete check** using the diagnostic tool. **Application conditions: ignition on (forced + after ignition, see Introduction)** **Note:** **The interpretation of these statuses and parameters is only valid with the ignition switched on**, the statuses and parameters displayed in blue on the diagnostic tool is information supplied by other computers, which are transmitted via the multiplex network. If these variables display inconsistent values, check that the multiplex system test has not shown up any faulty connections. **Repair the faulty multiplex connections before looking for a possible problem with the signals.** Each sub-function in this test is associated with a **Fault finding chart**. **Special notes** The diagnostic tool may display the message **Computer busy** when displaying statuses and parameters. This message is displayed when the parking brake is applying or releasing the brake, because the computer gives priority to controlling the motor before transmitting variables. If this message is displayed, exit the current screen and then return to it.

SUB-FUNCTION: AUTOMATIC RELEASE (CONTINUED 5)

Order	Function	Parameter or Status Checked or Action	Display and notes	Fault finding
9	Wheel speeds	**PR012:** Vehicle speed	**X = 0 mph (km/h)**	In the event of a fault with this parameter, check that the anti-lock braking system computer is sending the signal correctly (absence of faults **DF037 No ABS system multiplex signal** and **DF052 Multiplex network**). If the fault is still present, run **fault finding** on the anti-lock braking system computer (see **38C, Anti-lock braking system**).

GETtheMANUALS.org

NOTES	Only carry out this conformity check after carrying out a **complete check** using the diagnostic tool. **Application conditions: ignition on (forced + after ignition, see Introduction)** **Note:** **The interpretation of these statuses and parameters is only valid with the ignition switched on**, the statuses and parameters displayed in blue on the diagnostic tool is information supplied by other computers, which are transmitted via the multiplex network. If these variables display inconsistent values, check that the multiplex system test has not shown up any faulty connections. **Repair the faulty multiplex connections before looking for a possible problem with the signals.** Each sub-function in this test is associated with a **Fault finding chart**. **Special notes** The diagnostic tool may display the message **Computer busy** when displaying statuses and parameters. This message is displayed when the parking brake is applying or releasing the brake, because the computer gives priority to controlling the motor before transmitting variables. If this message is displayed, exit the current screen and then return to it.

SUB-FUNCTION: AUTOMATIC RELEASE (CONTINUED 6)

Order	Function	Parameter or Status Checked or Action	Display and notes	Fault finding
10	Electronic parking brake	**PR005:** Force setting **PR004:** Measured force value	In rest position: **X = 0 N** When applying the brake on a level surface: **400 < X < 550 N** When fully applied (lever fully pulled for 2 seconds) on a level surface: **1100 < X < 1150 N** **Note**: **depressing the brake pedal once** when the parking brake is applied changes the measured force value (change in the tension of the brake cables) and the parking brake may be over-applied. **Interpretation of these parameters is only valid without any pressure on the brake pedal.**	The difference between the reference and measured values must not be more than - **50 N or + 100 N**. If the measured value does not reach or exceeds the reference value (mechanical or electrical fault with the control), the electronic parking brake computer will detect a fault (**DF025 Vehicle movement with maximum application, DF049 Brake application** or **DF050 Mechanical jamming**). If one of these three faults is displayed by the diagnostic tool, use the relevant interpretation.

GETtheMANUALS.org

NOTES	Only carry out this conformity check after carrying out a **complete check** using the diagnostic tool. **Application conditions: ignition on (forced + after ignition, see Introduction)** **Note:** **The interpretation of these statuses and parameters is only valid with the ignition switched on**, the statuses and parameters displayed in blue on the diagnostic tool is information supplied by other computers, which are transmitted via the multiplex network. If these variables display inconsistent values, check that the multiplex system test has not shown up any faulty connections. **Repair the faulty multiplex connections before looking for a possible problem with the signals.** Each sub-function in this test is associated with a **Fault finding chart**. **Special notes** The diagnostic tool may display the message **Computer busy** when displaying statuses and parameters. This message is displayed when the parking brake is applying or releasing the brake, because the computer gives priority to controlling the motor before transmitting variables. If this message is displayed, exit the current screen and then return to it.

SUB-FUNCTION: AUTOMATIC RELEASE (CONTINUED 7)

Order	Function	Parameter or Status Check or Action	Display and Notes	Fault finding
11	Electronic parking brake	**ET011:** Parking brake	No movement of the lever: **INACTIVE** When released: **Released** (while releasing, then **INACTIVE**) When applying the brake: **STATUS 1: Static braking** During emergency braking: **STATUS 2: Dynamic braking** (over 6 mph (10 km/h)). When the system is faulty: **DEFECTIVE**	If the status does not function as indicated, **consult the interpretation** of fault **DF043 Parking brake motor**.
12	Vehicle incline	**PR003:** Slope value	On horizontal ground the value is: **- 2 d° < X < + 2 d°** Possible values according to the slope: **- 25 d° < X < + 25 d°**	On a level surface, if the reading is not **0 d° ± 2**: Refer to the interpretation of parameter **PR003 Slope value**.

GETtheMANUALS.org

NOTES	Only carry out this conformity check after carrying out a **complete check** using the diagnostic tool. **Application conditions: ignition on (forced + after ignition, see Introduction)** **Note:** **The interpretation of these statuses and parameters is only valid with the ignition switched on**, the statuses and parameters displayed in blue on the diagnostic tool is information supplied by other computers, which are transmitted via the multiplex network. If these variables display inconsistent values, check that the multiplex system test has not shown up any faulty connections. **Repair the faulty multiplex connections before looking for a possible problem with the signals.** Each sub-function in this test is associated with a **Fault finding chart**. **Special notes** The diagnostic tool may display the message **Computer busy** when displaying statuses and parameters. This message is displayed when the parking brake is applying or releasing the brake, because the computer gives priority to controlling the motor before transmitting variables. If this message is displayed, exit the current screen and then return to it.

SUB-FUNCTION: EMERGENCY BRAKING

Order	Function	Parameter or Status Checked or Action	Display and notes	Fault finding
1	Engine	**ET019:** Engine	**STOPPED** Other possibilities depending on the operating status of the engine: **- RUNNING** **- UNDER STARTER** **- STALLED**	In the event of a fault with this status, check that the injection computer is sending the signal correctly (absence of faults **DF036 No injection multiplex signal** and **DF052 Multiplex network**). If the fault is still present, run **fault finding** on the injection computer (see **13B, Diesel injection or 17B, Petrol injection**).
2	Wheel speeds	**PR012:** Vehicle speed	**X = 0 mph (km/h)**	In the event of a fault with these parameters, check that the anti-lock braking system computer is sending the signals correctly (absence of faults **DF037 No ABS multiplex signal** and **DF052 Multiplex network**). If the fault is still present, run **fault finding** on the anti-lock braking system computer (see **38C, Anti-lock braking system**).
		PR013: Rear left-hand wheel speed	**X = 0 mph (km/h)**	
		PR014: Rear right-hand wheel speed	**X = 0 mph (km/h)**	

GETtheMANUALS.org

NOTES	Only carry out this conformity check after carrying out a **complete check** using the diagnostic tool. **Application conditions: ignition on (forced + after ignition, see Introduction)** **Note:** **The interpretation of these statuses and parameters is only valid with the ignition switched on**, the statuses and parameters displayed in blue on the diagnostic tool is information supplied by other computers, which are transmitted via the multiplex network. If these variables display inconsistent values, check that the multiplex system test has not shown up any faulty connections. **Repair the faulty multiplex connections before looking for a possible problem with the signals.** Each sub-function in this test is associated with a **Fault finding chart**. **Special notes:** The diagnostic tool may display the message **Computer busy** when displaying statuses and parameters. This message is displayed when the parking brake is applying or releasing the brake, because the computer gives priority to controlling the motor before transmitting variables. If this message is displayed, exit the current screen and then return to it.

SUB-FUNCTION: EMERGENCY BRAKING (CONTINUED 1)

Order	Function	Parameter or Status Checked or Action		Display and notes	Fault finding
3	Parking brake control lever	**ET008:**	Braking switch position	Lever released: **INACTIVE** Lever pulled to the first contact (approximately 3 mm travel): **ACTIVE**	If the status does not operate as specified, **apply the interpretation** of status **ET008 Brake application switch position**.
		ET009:	Redundant braking switch position	Lever released: **INACTIVE** Lever pulled to the second contact (end of travel): **ACTIVE**	If the status does not operate as specified, **use the interpretation** of status **ET009 Redundant braking switch position**.
		ET010:	Release switch position	Lever in rest position **RELEASED** Lever fully pulled and releasing switch pressed: **PRESSED**	If the status does not operate as specified, **apply the interpretation** of status **ET010 Releasing switch position**.

GETtheMANUALS.org

NOTES	Only carry out this conformity check after carrying out a **complete check** using the diagnostic tool. **Application conditions: ignition on (forced + after ignition, see Introduction)** **Note:** **The interpretation of these statuses and parameters is only valid with the ignition switched on**, the statuses and parameters displayed in blue on the diagnostic tool is information supplied by other computers, which are transmitted via the multiplex network. If these variables display inconsistent values, check that the multiplex system test has not shown up any faulty connections. **Repair the faulty multiplex connections before looking for a possible problem with the signals.** Each sub-function in this test is associated with a **Fault finding chart**. **Special notes:** The diagnostic tool may display the message **Computer busy** when displaying statuses and parameters. This message is displayed when the parking brake is applying or releasing the brake, because the computer gives priority to controlling the motor before transmitting variables. If this message is displayed, exit the current screen and then return to it.

SUB FUNCTION: EMERGENCY BRAKING (CONTINUED 2)

Order	Function	Parameter or Status Checked or Action	Display and notes	Fault finding
4	Electronic parking brake	**ET011:** Parking brake	No movement of the lever: **INACTIVE** When released: **Released** (while releasing, then **INACTIVE**) When applying the brake: **STATUS 1: Static braking** During emergency braking: **STATUS 2: Dynamic braking** (over 6 mph (10 km/h)). When the system is faulty: **DEFECTIVE**	If the status does not function as indicated, **consult the interpretation** of fault **DF043 Parking brake motor**.

GETtheMANUALS.org

NOTES	Only carry out this conformity check after carrying out a **complete check** using the diagnostic tool. **Application conditions: ignition on (forced + after ignition, see Introduction)** **Note:** **The interpretation of these statuses and parameters is only valid with the ignition switched on**, the statuses and parameters displayed in blue on the diagnostic tool is information supplied by other computers, which are transmitted via the multiplex network. If these variables display inconsistent values, make sure that the multiplex system test has not shown up any faulty connections. **Repair the faulty multiplex connections before looking for a possible problem with the signals.** Each sub-function in this test is associated with a **Fault finding chart**. **Special notes** The diagnostic tool may display the message **Computer busy** when displaying statuses and parameters. This message is displayed when the parking brake is applying or releasing the brake, because the computer gives priority to controlling the motor before transmitting variables. If this message is displayed, exit the current screen and then return to it.

SUB FUNCTION: EMERGENCY BRAKING (CONTINUED 3)

Order	Function	Parameter or Status Checked or Action	Display and notes	Fault finding
1	Parking brake assist	**PR005:** Force setting **PR004:** Measured force value	In rest position: **X = 0 N** When applying the brake on a level surface: **400 < X < 550 N** When fully applied (lever fully pulled for 2 seconds) on a level surface: **1100 < X < 1150 N** **Note:** **depressing the brake pedal once** when the parking brake is applied changes the measured value of the force (change in the tension of the brake cables) and the parking brake may be over-applied. **Interpretation of these parameters is only valid without any pressure on the brake pedal.**	The difference between the reference and measured values must not be more than **- 50 N or + 100 N**. If the measured value does not reach or exceeds the reference value (mechanical or electrical fault with the control), the electronic parking brake computer will detect a fault (**DF025 Vehicle movement with maximum application, DF049 Brake application** or **DF050 Mechanical jamming**). If one of these three faults is displayed by the diagnostic tool, use the relevant interpretation.

GETtheMANUALS.org

Tool status	Diagnostic tool title
ET001	+ After ignition supply
ET008	Manual control: brake application switch
ET009	Redundant braking switch position
ET010	Manual control: brake releasing switch
ET011	Parking brake
ET014	Door opening switches
ET016	Manual gearbox lever position
ET017	Reverse gear engaged
ET018	Automatic gearbox lever position
ET019	Engine
ET022	Automatic braking configuration
ET024	System operation

GETtheMANUALS.org

ET001	+ AFTER IGNITION FEED

NOTES	None

This status means there is a + 12 V computer after ignition.
When the ignition is switched off, the status displays: ABSENT.
When the ignition is switched on, the status displays: PRESENT.

If the status does not operate as specified: disconnect the electronic parking brake computer connector to check the insulation, continuity and the absence of interference resistance on the following connections:
Automatic parking brake computer connector

track H4
(except Laguna II, Vel Satis and Espace IV) track G4 → **+ 12 V**

track H2
(except Laguna II, Vel Satis and Espace IV) track G2 → **earth**

Repair if necessary (see the vehicle wiring diagram).

If the connections are correct, the power is correctly supplied to the electronic parking brake computer, but the fault is still present, contact the Techline.

AFTER REPAIR	Repeat the conformity check from the start.

GETtheMANUALS.org

ET008 **ET009** **ET010**	MANUAL CONTROL: BRAKE APPLICATION SWITCH REDUNDANT BRAKE APPLICATION SWITCH POSITION MANUAL CONTROL: BRAKE RELEASING SWITCH

NOTES	None

Using the diagnostic tool (**PARKING** sub-function), check the operation of the parking brake control lever. With the ignition on, statuses **ET008, ET009, ET010** should operate as follows:

	ET008 Manual control: brake application switch	**ET009 "Redundant braking switch position"**	**ET010 Manual control: brake releasing switch**
Lever **in rest position**	**INACTIVE**	**INACTIVE**	**RELEASED**
Lever **applied slightly (3 mm travel)**	**ACTIVE**	**INACTIVE**	**RELEASED**
Lever **applied fully**	**ACTIVE**	**ACTIVE**	**RELEASED**
Lever **applied and release button pressed**	**ACTIVE**	**ACTIVE**	**PRESSED**

If the statuses do not operate as specified, refer to the fault finding procedure for fault **DF047 Manual control**.

AFTER REPAIR	Repeat the conformity check from the start.

FPA_V0C_ET008 / FPA_V0C_ET009 / FPA_V0C_ET010 / FPA_V04_ET008 / FPA_V04_ET009 / FPA_V04_ET010 / FPA_V08_ET008 / FPA_V08_ET009 / FPA_V08_ET010 / FPA_V0D_ET008 / FPA_V0D_ET009 / FPA_V0D_ET010 / FPA_V11_ET008 / FPA_V11_ET009 / FPA_V11_ET010

GETtheMANUALS.org

ET022	AUTOMATIC BRAKING CONFIGURATION

NOTES	**Special notes:** To understand the operation of assisted brake application, refer to **System operation**.

This status indicates the assisted braking configuration status.
This configuration can be checked on two screens.
- Configuration reading screen (repair mode): **LC009 Vehicle configuration** (**NORMAL** with braking, **COLD CLIMATE** without assisted braking).
- Variables screen (fault finding mode, assisted brake application sub-function).

ET022 Automatic braking configuration.
When the assisted braking is **ACTIVE**, the status should be **WITH**.
When the assisted braking is not **ACTIVE** (for cold countries, for example), the status should be **WITHOUT**.
If the configuration does not match the customer's request, reconfigure the electronic parking brake computer by activating configuration **CF007 Vehicle configuration** (repair mode, see **Configuration and programming**).

AFTER REPAIR	Repeat the conformity check from the start.

GETtheMANUALS.org

Tool parameter	Diagnostic tool title
PR001	Battery voltage
PR003	Slope value
PR004	Measured force value
PR005	Force setting
PR006	Clutch pedal position
PR012	Vehicle speed
PR013	Rear left-hand wheel speed
PR014	Rear right-hand wheel speed
PR015	Engine speed
PR017	Accelerator pedal position

GETtheMANUALS.org

PR003	SLOPE VALUE

NOTES	None

This parameter shows the vehicle's angle on a slope (X-axis).
The value displayed represents degrees (and not percentage grade).
Normally, this parameter should display:
- On level ground: **- 2 d° < X < + 2 d°**
- Possible values, depending on slope: **- 25 d° < X < + 25 d°**

If the values displayed are not correct, **contact the Techline**.

AFTER REPAIR	Repeat the conformity check from the start.

GETtheMANUALS.org

AC002	BRAKING

NOTES	**Special notes:** The commands are found in the tool's fault finding mode, **Actuator command** button.

Running this command tightens the electronic parking brake cables.
It can therefore be used to test operation of the electronic parking brake motor, either to display a present fault or to test motor operation in the event of a control lever failure.
Note:
Before running this command, check that the brake cables are correctly fitted and that no one is working on the vehicle.
Only run this command with the parking brake released.

AFTER REPAIR	Repeat the conformity check from the start.

GETtheMANUALS.org

AC003	RELEASE

NOTES	**Special notes:** The commands are found in the tool's fault finding mode, **Actuator command** button.

Running this command releases the electronic parking brake cables.
It can therefore be used to test operation of the electronic parking brake motor, either to display a present fault or to test motor operation in the event of a control lever failure.
Note:
Before running this command, check that the brake cables are correctly fitted and that no one is working on the vehicle.
Only run this command with the parking brake engaged.

AFTER REPAIR	Repeat the conformity check from the start.

GETtheMANUALS.org

SC005	SAVE CLUTCH PEDAL PROGRAMMING

NOTES	**Special notes:** The commands are found in the tool's repair mode, **Programming** button.

Run command **SC005 Backup clutch pedal programming** with the electronic parking brake computer which is faulty or to be replaced.
The pedals and the gearbox must not be operated during the backup procedure.
Carrying out this backup procedure before each replacement of the computer enables the old clutch pedal travel specifications to be re-entered into the new electronic parking brake computer.

Park the vehicle on a **level surface**.
– Select the diagnostic tool's **Repair mode** menu.
– From the tool's navigation menu, select **Programming**.
Run command **SC005 Backup clutch pedal programming**.

AFTER REPAIR	Repeat the conformity check from the start.

GETtheMANUALS.org

SC006	ENTER CLUTCH PEDAL PROGRAMMING

NOTES	**Special notes:** The commands are found in the tool's repair mode, **Programming** button.

Once the electronic parking brake computer has been changed.
Run command **SC006 Enter clutch pedal programming** after running command **SC005 Backup clutch pedal programming**.
Test braking and release, and starting the electronic parking brake computer when applied, to check conformity.

Park the vehicle on a **level surface**.
– Select the diagnostic tool's **Repair mode** menu.
– From the tool's navigation menu, select **Programming**.
– Run command **SC006 Enter clutch pedal programming**.
Note:
When a new electronic parking brake computer is initialised, the angle sensor is calibrated after running command **VP011 Computer calibration and initialisation**.

AFTER REPAIR	Repeat the conformity check from the start.

GETtheMANUALS.org

SC008	SLOPE INITIALISATION

NOTES	**Special notes:** The commands are found in the tool's repair mode, **Programming** button.

Using the diagnostic tool's automatic release sub-function screen, display parameter **PR003 Slope value**.
If the value displayed is not **0 d° ± 2** on level ground: run the command by following the procedure described below.

Park the vehicle on a **level surface**.
– Select the diagnostic tool's **Repair mode** menu.
– From the tool's navigation menu, select **Programming**.
– Run command **SC008 "Slope initialisation"**.
– Check the conformity of parameter **PR003 Slope value**.

Note:
When a new electronic parking brake computer is initialised, the angle sensor is calibrated after running command **VP011 Computer calibration and initialisation**.

AFTER REPAIR	Repeat the conformity check from the start.

GETtheMANUALS.org

NOTES	Only check the customer complaint after performing a complete check with the diagnostic tool.

NO DIALOGUE WITH THE COMPUTER	**ALP1**
WILL NOT RELEASE	**ALP2**
ASSISTED RELEASE TOO EARLY OR TOO LATE	**ALP3**
ASSISTED BRAKE APPLICATION PROBLEMS (when the engine stops)	**ALP4**
ELECTRONIC PARKING BRAKE MANUAL RELEASE IMPOSSIBLE	**ALP5**
RELEASE WITH THE EMERGENCY BRAKE IMPOSSIBLE	**ALP6**
ELECTRONIC PARKING BRAKE SEEMS TO BE APPLIED WHEN DRIVING	**ALP7**
ELECTRONIC PARKING BRAKE IS NOT APPLIED CORRECTLY ON A SLOPE	**ALP8**

GETtheMANUALS.org

ALP1	No dialogue with the computer

NOTES	**None.**

Try the diagnostic tool on another vehicle.

Check:
– the connection between the **diagnostic tool** and the diagnostic sensor (wiring in good condition),
– the connection between the diagnostic sensor and the diagnostic socket (lead in good condition),
– the engine and passenger compartment fuses.

Check for **+ 12 V battery** on **track 16**, and **+ 12 V after ignition feed** on **track 1** and an **earth** on **track 5** and on **track 4** of the diagnostic socket.
Repair if necessary.

Disconnect the automatic or electronic parking brake computer connector to check the **insulation, continuity and absence of interference resistance** on the following connections:
Automatic parking brake computer connector

track H4 → **(except Laguna II, Vel Satis and Espace IV) track G4** → **+ 12 V**

track H2 → **(except Laguna II, Vel Satis and Espace IV) track G2** → **earth**

track A4 → **track 7** of the diagnostic socket (K line)

Repair if necessary (see the vehicle wiring diagram).

AFTER REPAIR	Carry out a check using the **diagnostic tool**. Deal with any other faults.

GETtheMANUALS.org

ALP2	Will not release

NOTES	Only consult this customer complaint after a **full check using the diagnostic tool** (no present or stored faults). The main causes of the brake not releasing are: – Driver's door incorrectly closed (on vehicles with an automatic transmission). – Insufficient acceleration value. – Fault with gearbox switch. – Fault with door switch. – Pads stuck. – Incorrect multiplex line signals. If the manual release will not work, see ALP 4 **(see the wiring diagrams technical note for the vehicle concerned).**

Check that the force applied to the accelerator pedal is sufficient whether or not the vehicle is on a downward slope or not.

For a vehicle fitted with an automatic transmission, check that the door on the driver's side is not open or incorrectly closed.
Close the door again and go back through neutral if necessary.

Check that the interior lights have gone out.
Check that the door switch is working correctly:
Check the **insulation, continuity and the absence of interference resistance** on the following connections:
– connection code 87H
– connection code MA
Between the door switch, **component code 140** and the UCH, **component code 645.**
If there is a repair procedure (see **Technical Note 6015A, Repairing electrical wiring, Wiring: Precautions for repair**), repair the wiring, otherwise replace it.
Repair if necessary.

Check that the force applied to the accelerator pedal is sufficient and that the accelerator value is sufficient (refer to the conformity check) whether the vehicle is on a downward slope or not.

AFTER REPAIR	Carry out a check using the **diagnostic tool**. Deal with any other faults.

GETtheMANUALS.org

ALP2 CONTINUED 1	

For a vehicle fitted with an automatic gearbox:

Check the connection and condition of the automatic gearbox multifunction switch, component code **779**.
Check the connection and condition of the automatic gearbox computer, component code **119**.
If the connectors are faulty and if there is a repair procedure (see **Technical Note 6015A, Repairing electrical wiring, Wiring: Precautions for repair**) repair the connector(s); otherwise, replace the wiring.

Check **the insulation, continuity and the absence of interference resistance** of the following connections:
- **5DF** between components **779** and **119**,
- **5DG** between components **779** and **119**,
- **5DH** between components **779** and **119**,
- **5CF** between components **779** and **119**.

If the connection or connections are faulty and there is a repair procedure (see **Technical Note 6015A, Electrical wiring repair, Wiring: Precautions for repair**), repair the wiring, otherwise replace it.

For a vehicle fitted with a manual gearbox:

Check the connection and condition of the reversing lights sensor, component code **1109**.
Check the connection and condition of the Protection and Switching Unit, component code **1337** (Only for **Scénic II**), or the UCH, component code 645 (Only for **Vel Satis phase 1 and phase 2, Laguna II phase 2, Espace IV phase 1 and phase 2**).
If the connectors are faulty and if there is a repair procedure (see **Technical Note 6015A, Repairing electrical wiring, Wiring: Precautions for repair**) repair the connector(s); otherwise, replace the wiring.

Check the **insulation, continuity and the absence of interference resistance** of the following connection:
- **H66P** between components **1109** and **1337** (Only for **Scénic II**),
- **H66P** between components **1109** and **645** (Only for **Vel Satis phase 1 and phase 2, Laguna II phase 2, Espace IV phase 1 and phase 2**).

If the connection or connections are faulty and there is a repair procedure (see **Technical Note 6015A, Electrical wiring repair, Wiring: Precautions for repair**), repair the wiring, otherwise replace it.

AFTER REPAIR	Carry out a check using the **diagnostic tool**. Deal with any other faults.

GETtheMANUALS.org

ALP2 CONTINUED 2	

Carry out a multiplex network test (see **88B, Multiplexing**) and check for any potential incorrect multiplex line signals from the injection computer (see **13B, Diesel injection or 17B, Petrol injection**), the automatic gearbox computer (see **23A, Automatic gearbox**) the UCH computer (see **87B, Passenger compartment connection unit**) and the Protection and Switching Unit computer (see **87G, Engine compartment connection unit**).

Test the braking system:
Look for any areas where the brake pads may be sticking (due to ice, salt, etc.).
Check that the brake piston is operating correctly.
Repair if necessary.

If the fault is still present, contact the Techline.

AFTER REPAIR	Carry out a check using the **diagnostic tool**. Deal with any other faults.

GETtheMANUALS.org

ALP3	Assisted release too early or too late

NOTES	Only consult this customer complaint after a **full check using the diagnostic tool** (no present or stored faults). **(see the wiring diagrams technical note for the vehicle concerned).**

Assisted release may be activated too late if a trailer is attached to the vehicle.
Test assisted release without the trailer.

Test the braking system:
Look for any areas where the brake pads may be sticking (due to ice, salt, etc.).
Check that the brake piston is operating correctly.
Repair if necessary.

Check the clutch sensor positioning:
● **Espace IV and Vel Satis**
Check the **insulation, continuity and the absence of interference resistance** on the following connections:
– connection code 150K,
– connection code 150L,
– connection code 26X.
Between the electronic parking brake computer, **component code 1217** and the clutch position sensor, **component code 1057**.
If there is a repair procedure (**see Technical Note 6015A, Repairing electrical wiring, Wiring: Precautions for repair**), repair the wiring, otherwise replace the wiring.
Reposition it, if necessary.
Replace the clutch sensor if necessary (see **MR405 (Espace IV) or MR395 (Laguna II) or MR370 (Scénic), Mechanical, 37A, Mechanical component controls, Clutch pedal position sensor: Removal - Refitting or MR353 (Vel Satis ph 1), Mechanical, 37A, Mechanical component controls, Clutch pedal or MR402 (Vel Satis ph 2), Mechanical, 37A, Mechanical component controls, Clutch pedal switch: Removal - Refitting**).
● **Laguna II and Scénic II**
Check the **insulation, continuity and the absence of interference resistance** on the following connections:
– connection code 150Q,
– connection code 150L.
Between the electronic parking brake computer, **component code 1217** and the clutch pedal sensor, **component code 675** (see **section 87B, UCH, Door switch**).
1. Laguna II:
Check **the continuity and absence of interference resistance on the following connection**:
– connection code 86D
Between the injection computer, **component code 120** and the clutch pedal switch, **component code 675**.

AFTER REPAIR	Carry out a check using the **diagnostic tool**. Deal with any other faults.

GETtheMANUALS.org

ALP3 **CONTINUED**	

2. Scénic II:
Check **the continuity and absence of interference resistance on the following connection**:
– connection code H51.
Between the injection computer, **component code 120** and the clutch pedal switch, **component code 675**.
If there is a repair procedure (**see Technical Note 6015A, Repairing electrical wiring, Wiring: Precautions for repair**), repair the wiring, otherwise replace the wiring.
Reposition it, if necessary.
Replace the clutch sensor if necessary (see **MR405 (Espace IV) or MR395 (Laguna II) or MR370 (Scénic), Mechanical, 37A, Mechanical component controls, Clutch pedal position sensor: Removal - Refitting or MR353 (Vel Satis ph 1), Mechanical, 37A, Mechanical component controls, Clutch pedal or MR402 (Vel Satis ph 2), Mechanical, 37A, Mechanical component controls, Clutch pedal switch: Removal - Refitting**).

Reconfigure the vehicle clutch curve by applying the special command **SC006 Enter clutch pedal programming**.
Test the assisted brake release.

Check the condition of the clutch system (wear of the different components, possible build-up of grease on surfaces in friction).
Repair if necessary.
Carry out a multiplex network test (see **88B, Multiplexing**) and check for any potential faults on the injection computer (see **13B, Diesel injection or 17B, Petrol injection**), the automatic gearbox computer (see **23A, Automatic gearbox**) and the UCH computer (see **87B, Passenger compartment connection unit**).

If the fault is still present, contact the Techline.

AFTER REPAIR	Carry out a check using the **diagnostic tool**. Deal with any other faults.

GETtheMANUALS.org

ALP4	Assisted braking fault (when the engine is stopped)

NOTES	Only consult this customer complaint after a **full check using the diagnostic tool** (no present or stored faults). **(see the wiring diagrams technical note for the vehicle concerned).**

Check for any potential faults in the ABS computer (see **38C, Anti-lock braking system**), the UCH computer (see **87B, Passenger compartment connection unit**) and the injection computer (see **13B, Diesel injection or 17B, Petrol injection**) to ensure that they have actually received a request to stop the engine. Test the application of the electronic parking brake with the engine switched off.
Incorrect signal faults on the multiplex line. Run a multiplex network test (see **88B, Multiplex**).
When the engine stalls, the automatic brake application function is not active.
Check the **+ 12 V** supply, the **insulation, continuity and the absence of interference resistance** on the following connection: **– connection code BP2** Between the electronic parking brake computer, **component code 1217** and the battery, **component code 107**. If the continuity is correct, test the charging circuit (see **Technical Note 6014A, Checking the charging circuit**). Repair if necessary.
If the fault is still present, contact the Techline.

AFTER REPAIR	Carry out a check using the **diagnostic tool**. Deal with any other faults.

GETtheMANUALS.org

ALP5	Impossible to manually release electronic parking brake

NOTES	Only consult this customer complaint after a **full check using the diagnostic tool** (no present or stored faults). **(see the wiring diagrams technical note for the vehicle concerned).**

Check any incorrect signals on the multiplex line. Run a multiplex network test (see **88B, Multiplex**).
Check that the card is correctly inserted for a card reader, scenario 1 (not hands-free). If not, refer to the fault finding procedure for the UCH (see **87B, Passenger compartment connection unit**). Reposition it, if necessary.
Check that the steering column is unlocked.
Check the **+ 12 V** supply, the **insulation, continuity and the absence of interference resistance** on the following connection: **– connection code BP2** Between the electronic parking brake computer, **component code 1217** and the battery, **component code 107**. If the continuity is correct, test the charging circuit (see **Technical Note 6014A, Checking the charging circuit**). Repair if necessary.
Check the operation of the release switch. Check the continuity of the following connection codes: **– connection code 150P,** **– connection code 150N,** **– connection code 150B,** **– connection code 150G,** Between the control unit of the electronic parking brake lever, **component code 1216** and the electronic parking brake computer, **component code 1217**. Repair if necessary.
If the fault is still present, contact the Techline.

AFTER REPAIR	Carry out a check using the **diagnostic tool**. Deal with any other faults.

GETtheMANUALS.org

ALP6	**Impossible to release with the emergency brake**

NOTES	Only consult this customer complaint after a **full check using the diagnostic tool** (no present or stored faults).

Check that the electronic parking brake is not already released.
Check that the force is sufficient to release the emergency brake. Reduce the emergency brake cable voltage, if necessary.
If the fault is still present, contact the Techline.

AFTER REPAIR	Carry out a check using the **diagnostic tool**. Deal with any other faults.

GETtheMANUALS.org

ALP7	**The electronic parking brake seems to apply whilst driving**

NOTES	Only consult this customer complaint after a **full check using the diagnostic tool** (no present or stored faults).

Check that the engine has not stalled whilst driving.
Check that the electronic parking brake is actually released.
Check that the injection control system is not in defect mode (engine Limp Home). Run a multiplex network test (see **88B, Multiplex**). Check for any potential faults in the injection computer (see **13B, Diesel injection or 17B, Petrol injection**). If the fault is still present, contact the Techline.

AFTER REPAIR	Carry out a check using the **diagnostic tool**. Deal with any other faults.

GETtheMANUALS.org

ALP8	**The electronic parking brake does not apply correctly on a slope**

NOTES	Only consult this customer complaint after a **full check using the diagnostic tool** (no present or stored faults). **(see the wiring diagrams technical note for the vehicle concerned).**

Check that the vehicle is correctly gripping the ground.
Check that the vehicle is not outside the limits.
Check the **+ 12 V** supply, the **insulation, continuity and the absence of interference resistance** on the following connection: **– connection code BP2** Between the electronic parking brake computer, **component code 1217** and the battery, **component code 107**. If the continuity is correct, test the charging circuit (see **Technical Note 6014A, Checking the charging circuit**). Repair if necessary.
Check the condition of the brake pads (wear, fitting, insufficient running in, etc.). Replace if necessary.
Check the condition of the brake callipers. Repair if necessary.
Check the fitting of the pressure plate between the electronic parking brake and the brake calliper. Refit if necessary.
If the fault is still present, contact the Techline.

AFTER REPAIR	Carry out a check using the **diagnostic tool**. Deal with any other faults.

GETtheMANUALS.org

VEL SATIS

3 Chassis

38C ANTI-LOCK BRAKING SYSTEM

Fault finding - Introduction	38C - 1
Diagnostics - Allocation of computer tracks	38C - 8
Fault finding - Fault summary table	38C - 10
Fault finding - Conformity check	38C - 72
Fault finding - Help	38C - 73
Fault finding - Interpretation of statuses	38C - 76
Fault finding - Customer complaints	38C - 78
Fault finding - Fault Finding Chart	38C - 79

BJ0E - BJ0J - BJ0K - BJ0M - BJ0P - BJ0V

77 11 311 262 **Edition 3 - OCTOBER 2005** **EDITION ANGLAISE**

"The repair procedures given by the manufacturer in this document are based on the technical specifications current when it was prepared.

The procedures may be modified as a result of changes introduced by the manufacturer in the production of the various component units and accessories from which his vehicles are constructed."

All rights reserved by Renault s.a.s.

Copying or translating, in part or in full, of this document or use of the service part reference numbering system is forbidden without the prior written authority of Renault s.a.s.

© Renault s.a.s. 2005

ANTI-LOCK BRAKING SYSTEM
Fault finding - Introduction

GETtheMANUALS.org

1. SCOPE OF THIS DOCUMENT

This document presents the fault finding procedure applicable to all computers with the following specifications:

Vehicle(s): ***Vel Satis*** *Function concerned:* ***MK60 ABS/ESP***	*Computer name:* ***MK60 ABS/ESP*** *Program no.:* *VDIAG no.:*

2. PREREQUISITES FOR FAULT FINDING

Documentation type

Fault finding procedure (this document)**:**
– Assisted fault finding (integrated to diagnostic tool), Dialogys.

Wiring diagrams:
– Visu-Schéma (CD-ROM), paper.

Type of diagnostic tools

– **CLIP or NXR**

Special tooling required

Special tooling required
Multimeter

GETtheMANUALS.org

Faults

Faults are displayed as present or stored (they appeared in a certain context and have since disappeared, or they are still present but cannot be diagnosed in the current context).

The **present** or **stored** status of faults should be taken into consideration when the diagnostic tool is used after the + after ignition feed has been supplied (without acting on the system components).

For a **present fault**, apply the procedure described in the **Interpretation of faults** section.

For a **stored fault**, note the faults displayed and apply the instructions in the **Notes** section.

If the fault is **confirmed** when the notes are applied, the fault is present. Deal with the fault

If the fault is **not confirmed**, check:
- the electrical lines which correspond to the fault,
- the connectors on these lines (corrosion, bent pins, etc.),
- the resistance of the faulty component,
- the condition of the wires (melted or cut insulation, wear).
- or use the fault finding procedure to check the circuit of the faulty component.

Conformity check

The conformity check is designed to check the statuses and parameters which do not display any faults on the diagnostic tool when not operating consistently. Therefore, this stage is used to:
- perform fault finding on faults that do not have a fault display, and which may correspond to a customer complaint.
- check that the system is operating correctly and that there is no risk of a fault reappearing after repairs.

This section gives the fault finding procedures for statuses and parameters and the conditions for checking them.

If a status is not behaving normally or a parameter is outside permitted tolerance values, you should consult the corresponding fault finding page.

Customer complaints - Fault finding chart

If the diagnostic tool check is correct, but the customer complaint is still present, the fault should be dealt with according to the **customer complaint**.

A summary of the overall procedure to follow is provided on the following page in the form of a flow chart

GETtheMANUALS.org

4. FAULT FINDING PROCEDURE (continued)

Wiring check:

Fault finding problems:
Disconnecting the connectors and/or manipulating the wiring may temporarily clear the cause of a fault.
Electrical measurements of the voltage, resistance and insulation are generally correct, especially if the fault is not present when the measurements are being taken (stored fault).

Visual inspection:
Look for any damage under the bonnet and in the passenger compartment.
Carefully check the fuses, insulators and wiring harness routing.
Look for signs of oxidation.

Touch inspection:
While manipulating the wiring, use the diagnostic tool to detect any changes in fault status from stored to present.
Make sure that the connectors are firmly secured.
Apply light pressure to the connectors,
Twist the wiring harness.
If there is a change in status, try to locate the source of the fault.

Inspection of each component:
Disconnect the connectors and check the appearance of the clips and tabs and their crimping (no crimping on the insulating section).
Make sure that the clips and tabs are properly locked in the sockets.
Check that no clips or tabs have been dislodged during connection.
Check the clip contact pressure using the appropriate type of tab.

Resistance check:
Check the continuity of the entire lines, then section by section. Look for a short circuit to earth, to the + 12 V feed or with another wire.

If a fault is detected, repair or replace the wiring harness.

GETtheMANUALS.org

4. FAULT FINDING PROCEDURE

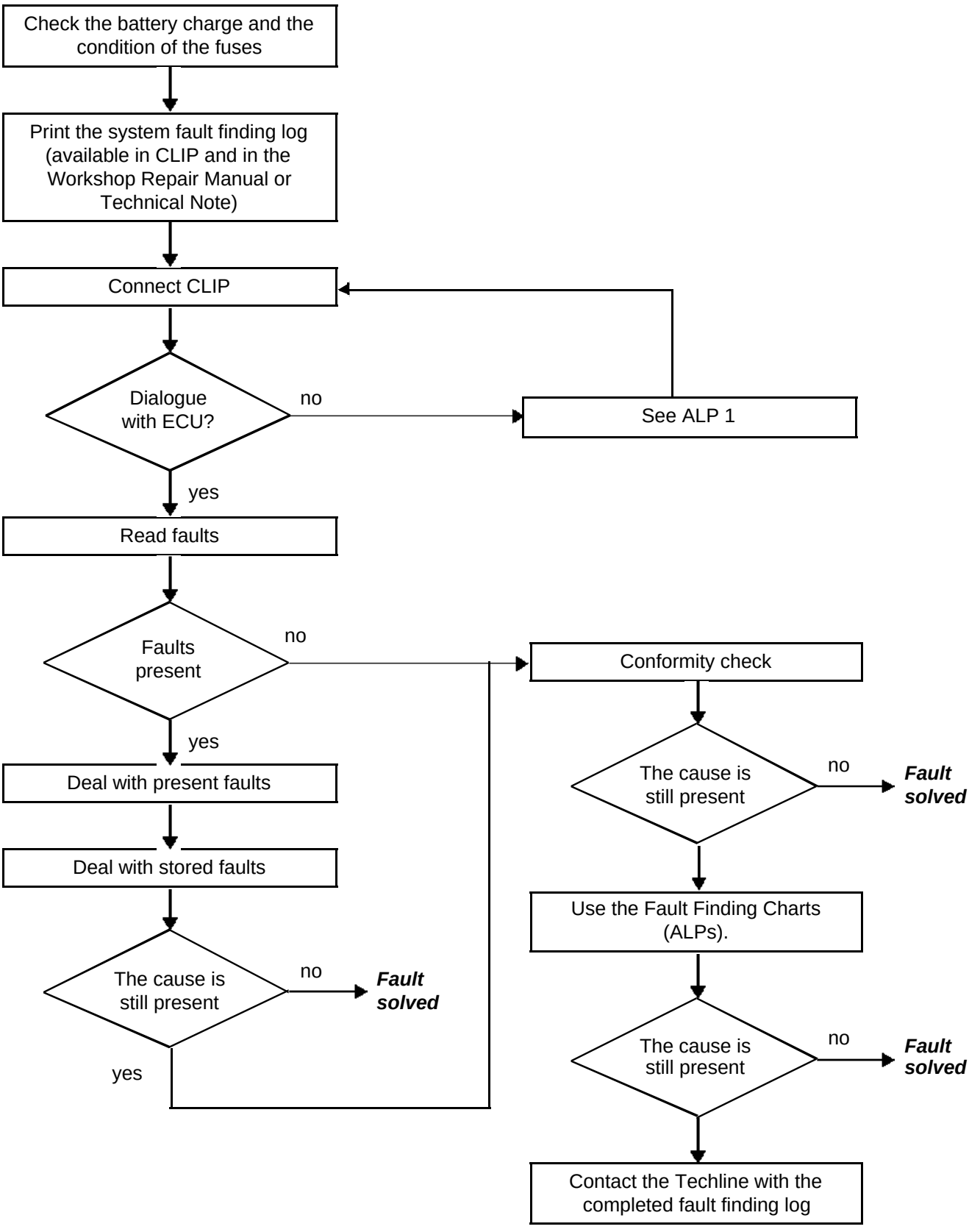

GETtheMANUALS.org

IMPORTANT!

5. FAULT FINDING LOG

IMPORTANT:
Any fault on a complex system call for thorough fault finding with the appropriate tools. The FAULT FINDING LOG, which should be completed during the fault finding procedure, ensures a record is kept of the procedure carried out. It is an essential document when consulting the manufacturer.

IT IS THEREFORE MANDATORY TO FILL OUT A FAULT FINDING LOG EACH TIME FAULT FINDING IS CARRIED OUT.

You will always be asked for this log:

- When requesting technical assistance from the Techline.
- For certification requests when replacing parts that must be certified.
- To be attached to monitored parts for which reimbursement is requested. The log is needed for warranty reimbursement, and enables better analysis of the parts removed.

6. SAFETY ADVICE

Safety rules must be observed whenever work is carried out on a component to prevent physical damage or human injury:

– Make sure the battery is properly charged to avoid damaging the computers with a low load.

– Use the appropriate tools.

– **It is forbidden to carry out a road test while dialogue is still established between the diagnostic tool and the computer, as the ABS and Electric Braking Distribution (EBD) functions are deactivated. Braking pressure is identical on both vehicle axles (risk of a spin under heavy braking).**

FAULT FINDING LOG

System: anti-lock braking system and ESP (Electronic Stability program)

GETtheMANUALS.org

List of monitored parts: ***Computer***

Administrative identification

Date	2 0
Log completed by	
VIN	
Engine	
Diagnostic tool	CLIP
Revision	

Customer complaint

	1786	Anti-lock braking system not triggered		1787	Accidental triggering of anti-lock braking system		1790	Warning lights come on
	1788	ESP not triggered		1789	Accidental triggering of ESP			

Other — Your comments:

Conditions under which the customer complaint occurs

	004	Intermittently		005	While driving		011	When the ignition is switched on
	009	Sudden fault						

Other — Your comments:

Documentation used in fault finding

Fault finding procedure used	
Type of diagnostic manual:	MR ❑ Technical Note ❑ Assisted fault finding ❑
Fault finding manual No.:	
Wiring diagram used	
Wiring Diagram Technical Note No.:	
Other documentation	
Title and/or part number:	

RENAULT

FD 02
Fault finding log

GETtheMANUALS.org

FAULT FINDING LOG

System: anti-lock braking system and ESP (Electronic Stability program)

Computer identification and parts exchanged for the system

Part 1 part no.	
Part 2 part no.	
Part 3 part no.	
Part 4 part no.	
Part 5 part no.	

To be read with the Diagnostic tool (Identification screen):

Computer part no.	
Supplier No.	
Program No.	
Software version	
Calibration No.	
VDIAG	

Faults found with the diagnostic tool

Fault no.	Present	Stored	Fault name	Specification

Conditions under which fault occurs

Status or parameter no.	Parameter name	Value	Unit

System-specific information

Description:

Additional information

What factors led you to replace the computer? What other parts were replaced?	
Other defective functions?	
Your comments:	

RENAULT

FD 02
Fault finding log

GETtheMANUALS.org

47-TRACK CONNECTOR

Track	Allocation	Sensor/actuator tracks
1	Pump motor power supply	
2	K line	
3	Brake pedal travel sensor signal (A0, B0)	Track 3 brake pedal travel sensor
4	+ After ignition feed	
5	Brake pedal travel sensor earth (A0, B0)	Track 2 brake pedal travel sensor
6	Transverse acceleration signal (B0) or cluster feed (C1, E0, E1)	Track 3 combined sensor
7	+ 5 V brake pedal travel sensor	Track 1 pedal travel sensor
8	Not used	
9	Not used	
10	Not used	
11	Multiplex line H	
12	CAN H track to cruise control with distance limiter	
13	Relay control for turning off brake lights (C1)	
14	CAN L track to cruise control with distance limiter	
15	Multiplex line L	
16	Earth	Track 4 servo microswitch
17	Brake servo solenoid valve feed (C1)	Track 3 brake pressure sensor
18	+ 5 V brake pressure sensor	Track 1 brake pressure sensor
19	Brake pressure sensor earth	Track 2 brake pressure sensor
20	Brake pressure sensor earth	
21	Not used	
22	Not used	
23	Not used	Track 5 combined sensor
24	Earth cluster sensor (C1, E0, E1)	
25	CAN L (only for ESP	
26	Not used	Track 1 servo microswitch
27	Brake servo microswitch signal normally open (C1)	Track 5 servo microswitch
28	Brake servo microswitch feed C1	
29	CAN L (only for ESP	Track 2 servo microswitch
30	Servo microswitch signal normally closed (C1)	Track 3 servo microswitch
31	Servo solenoid valve control (C1)	
32	Solenoid valve supply	Track 1 front right-hand wheel sensor
33	Front Right-hand speed sensor earth	Track 2 front right-hand wheel sensor
34	Front Right-hand speed sensor signal and supply	
35	Brake lights off (C1) or on(C1,E1) relay control	Track 2 rear left-hand wheel sensor
36	Rear left-hand speed sensor signal and supply	Track 1 rear left-hand wheel sensor
37	Rear left-hand sensor earth	
38	ASR/ESP deactivation input	
39	Vehicle speed wire connection	Track 1 yaw speed sensor
40	Yaw speed sensor signal (B0)	
41	Brake pedal close contact	Track 1 rear right-hand wheel sensor
42	Rear Right-hand speed sensor earth	Track 2 rear right-hand wheel sensor
43	Rear Right-hand speed sensor signal and supply	
44	Not used	Track 2 front left-hand wheel sensor
45	Front Left-hand speed sensor signal and supply	Track 1 rear left-hand wheel sensor
46	Front Left-hand speed sensor earth	
47	Earth	

GETtheMANUALS.org

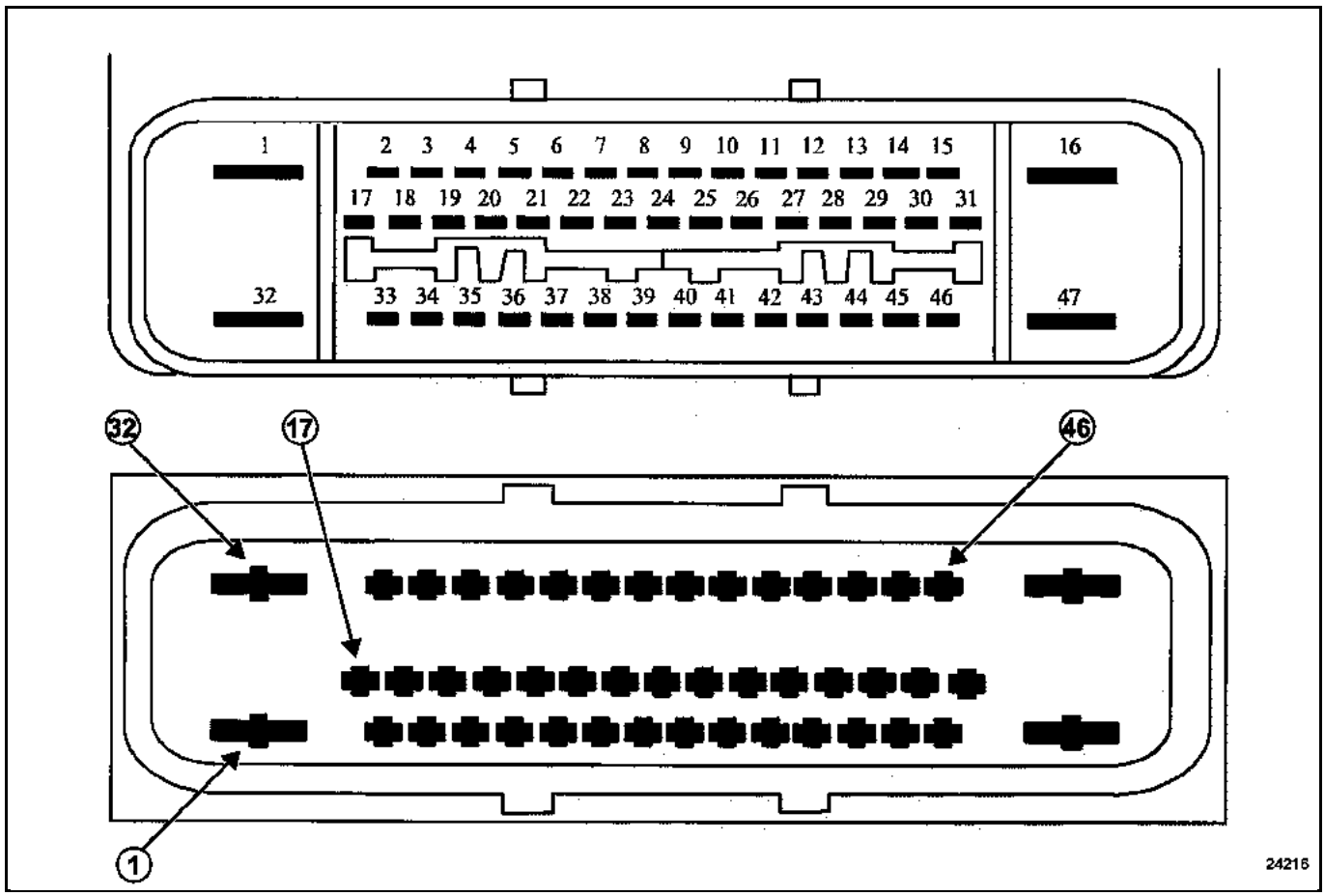

GETtheMANUALS.org

Tool fault	Associated DTC	Diagnostic tool title
DF006	5015	Front left-hand wheel speed sensor circuit
DF007	5035	Rear left-hand wheel speed sensor circuit
DF008	5016	Front left-hand wheel speed sensor signal
DF009	5036	Rear left-hand wheel speed sensor signal
DF010	50D3	Pump motor circuit
DF017	50C3	Computer
DF020	5140	Tachometric index programming
DF026	5005	Front right-hand wheel speed sensor circuit
DF027	5025	Rear right-hand wheel speed sensor circuit
DF028	5006	Front right-hand wheel speed sensor signal
DF029	5026	Rear right-hand wheel speed sensor signal
DF047	50E1	Multiplex network
DF056	50C6	Brake pedal switch consistency
DF066	50E2	No injection multiplex signal
DF075	5111	Steering wheel angle sensor signal
DF088	5120	Pressure sensor circuit
DF090	5041	Front right-hand wheel target
DF091	5042	Front left-hand wheel target
DF092	5043	Rear right-hand wheel target
DF093	5044	Rear left-hand wheel target
DF094	50C1	Computer supply voltage too high
DF095	50C0	Computer supply voltage too low
DF096	50CA	Computer internal electronic irregularity
DF097	50E3	No automatic gearbox multiplex signal
DF098	50E4	No UCH multiplex signal
DF099	50E7	ABS private multiplex network
DF100	50E8	No steering wheel angle multiplex signal

GETtheMANUALS.org

Tool fault	ASSOCIATED DTC	Diagnostic tool title
DF101	50E9	No combined sensor multiplex signal
DF102	5148	Save sensor calibrations.
DF103	50EA	No ACC multiplex signal
DF104	5100	Combined sensor internal electronic irregularity
DF107	5112	Steering wheel angle sensor identifier
DF108	5110	Steering wheel angle sensor
DF109	5122	Brake pressure sensor signal.
DF110	5123	Sensor feed
DF111	5130	Brake pedal travel sensor circuit
DF112	5133	Brake pedal travel consistency
DF114	5132	Brake servo microswitch circuit
DF115	5134	Brake servo microswitch status consistency.
DF116	5141	Vehicle configuration programming
DF117	5143	ABS/ESP calibration programming
DF118	5142	Vehicle options programming
DF119	5150	Gearbox type configuration
DF120	5151	Injection multiplex signal consistency
DF121	5153	Torque requested not available
DF122	5152	No injection multiplex signal
DF125	5108	Combined sensor supply
DF126	5109	Combined sensor signal plausibility
DF127	5135	Temperature sensor circuit
DF155	5107	ESP function
DF171	5154	Adaptive cruise control
DF172	5155	Distance limiter deceleration control
DF173	5136	Brake servo solenoid valve
DF174	50D7	Distance limiter brake servo solenoid valve
DF176	5007	Front right-hand wheel speed sensor frequency
DF177	5017	Front left-hand wheel speed sensor frequency
DF178	5037	Rear left-hand wheel speed sensor frequency
DF179	5027	Rear right-hand wheel speed sensor frequency
DF185	5131	Brake servo solenoid valve circuit / internal supply

GETtheMANUALS.org

DF006 PRESENT OR STORED	FRONT LEFT-HAND WHEEL SPEED SENSOR CIRCUIT.

NOTES	**Special notes:** None.
	Conditions for applying fault finding procedure to a stored fault: Apply the fault finding procedure described below in **DF006 stored**.

DF006 present	***NOTES***	**Special notes:** None.

Check the connection and condition of the sensor and the computer.
Disconnect the sensor and check that a voltage of approximately **12 V** is present **under + after ignition feed** at the sensor connector terminals on the computer side.
Is the voltage measured correct?

YES

Swap the 2 front wheel speed sensors over. Clear the computer memory.

Switch off the ignition. Switch on the ignition again.

If the fault initially declared **DF006 Front left-hand wheel speed sensor circuit** has become **DF026 Front right-hand wheel speed sensor circuit**, replace the wheel speed sensor.

If the fault remains on the same side, the wiring between the computer and the sensor is faulty.

Check and ensure the continuity of the following connections:

Sensor connector **track 1** → **track 46** Computer connector
Sensor connector **track 2** → **track 45** Computer connector

Also check the insulation between these two connections.

NO

Check and ensure the continuity of the following connections:

Sensor connector **track 1** → **track 46** Computer connector
Sensor connector **track 2** → **track 45** Computer connector

Also check the insulation between these two connections.

Carry out a visual inspection of the sensor wiring.

If all the checks are correct, contact your Techline.

AFTER REPAIR	Clear the computer memory. Carry out a road test followed by another check with the diagnostic tool.

GETtheMANUALS.org

DF006 CONTINUED	

DF006 stored	*NOTES*	**Special notes:** None.

Check the connection and condition of the sensor and the computer.
Swap the 2 front wheel speed sensors over.
Clear the computer memory.
Carry out a road test and then recheck with the diagnostic tool.

If the fault initially declared **DF006 Front left-hand wheel speed sensor circuit** has become **DF026 Front right-hand wheel speed sensor circuit**, replace the wheel speed sensor.

If the fault remains on the same side, the wiring between the computer and the sensor is faulty.

Check and ensure the continuity of the following connections:

Sensor connector **track 1** ⟶ **track 46** Computer connector
Sensor connector **track 2** ⟶ **track 45** Computer connector

Also check the insulation between these two connections.

AFTER REPAIR	Clear the computer memory. Carry out a road test followed by another check with the diagnostic tool.

GETtheMANUALS.org

DF007 PRESENT OR STORED	REAR LEFT-HAND WHEEL SPEED SENSOR CIRCUIT

NOTES	**Special notes:** None.
	Conditions for applying fault finding procedure to a stored fault: Apply the fault finding procedure described below in **DF007 stored**.

DF007 present	***NOTES***	**Special notes:** None.

Check the connection and condition of the sensor and the computer.
Disconnect the sensor and check that a voltage of approximately **12 V** is present **under + after ignition feed** at the sensor connector terminals on the computer side.

Is the voltage measured correct?

YES

Swap the 2 rear wheel speed sensors. Clear the computer memory.

Switch off the ignition. Switch on the ignition again.

If the fault initially declared **DF007 "Rear left-hand wheel speed sensor circuit"** has become a **DF027 "Rear right-hand wheel speed sensor circuit" present fault**, replace the wheel speed sensor.

If the fault remains on the same side, the wiring between the computer and the sensor is faulty.

Check and ensure the continuity of the following connections:

Sensor connector **track 1** → **track 37** Computer connector
Sensor connector **track 2** → **track 36** Computer connector

Also check the insulation between these two connections.

NO

Check and ensure the continuity of the following connections:

Sensor connector **track 1** → **track 37** Computer connector
Sensor connector **track 2** → **track 36** Computer connector

Also check the insulation between these two connections.

Carry out a visual inspection of the sensor wiring.

If all the checks are correct, contact your Techline.

AFTER REPAIR	Clear the computer memory. Carry out a road test followed by another check with the diagnostic tool.

GETtheMANUALS.org

DF007 CONTINUED	

DF007 stored	***NOTES***	Special notes: None.

Check the connection and condition of the sensor and the computer.
Swap the 2 rear wheel speed sensors.
Clear the computer memory.
Carry out a road test and then recheck with the diagnostic tool.

– If the fault initially declared **DF007 "Rear left-hand wheel speed sensor circuit"** has become a **DF027 "Rear right-hand wheel speed sensor circuit" present fault**, replace the wheel speed sensor.
– If the fault remains on the same side, the wiring between the computer and the sensor is faulty.

Check and ensure the continuity of the following connections:

Sensor connector **track 1** ⟶ **track 37** Computer connector
Sensor connector **track 2** ⟶ **track 36** Computer connector

Also check the insulation between these two connections.

AFTER REPAIR	Clear the computer memory. Carry out a road test followed by another check with the diagnostic tool.

GETtheMANUALS.org

DF008 STORED	FRONT LEFT-HAND WHEEL SPEED SENSOR SIGNAL.

NOTES	**Priorities when dealing with a number of faults:** Deal with fault **DF006 Front left-hand wheel speed sensor circuit** first if it is present.
	Conditions for applying the fault finding procedure to stored faults: The fault is present during: road test (in excess of **12 mph (20 km/h)** for **2 minutes)**.

Check that the wheel speed sensor mounting is in good condition (correct clipping).
Check the sensor/target air gap over one wheel revolution: **0.1 mm < front wheel air gap < 1.1 mm**
Check the conformity of the target: condition, **number of teeth = 48** (using specific command **SC001 Check target teeth**).

Check the connection and the condition of the sensor connectors.
Carry out a visual inspection of the sensor wiring and check the condition of the connections on the **47-track computer connector.**

If the results of the checks are correct, reconnect the computer and the wheel speed sensor and clear the computer memory.
Exit the fault finding procedure and carry out a road test. Replace the sensor if the fault recurs.

AFTER REPAIR	Clear the computer memory. Carry out a road test followed by another check with the diagnostic tool.

GETtheMANUALS.org

DF009 STORED	REAR LEFT-HAND WHEEL SPEED SENSOR SIGNAL.

NOTES	**Priorities when dealing with a number of faults:** Deal with fault **DF001 Rear left-hand speed sensor circuit** first if it is present.
	Conditions for applying the fault finding procedure to stored faults: The fault is present during: road test (in excess of **12 mph (20 km/h)** for **2 minutes)**.

Check that the wheel speed sensor mounting is in good condition (correct clipping).
Check the sensor/target air gap through one revolution of the wheel: **0.3 mm < rear wheel air gap < 1.3 mm**
Check the conformity of the target: condition, **number of teeth = 48** (using specific command **SC001 Check target teeth**).

Check the connection and the condition of the sensor connectors.
Carry out a visual inspection of the sensor wiring and check the condition of the connections on the **47-track computer connector.**

If the results of the checks are correct, reconnect the computer and the wheel speed sensor and clear the computer memory.
Exit the fault finding procedure and carry out a road test. Replace the sensor if the fault recurs.

AFTER REPAIR	Clear the computer memory. Carry out a road test followed by another check with the diagnostic tool.

GETtheMANUALS.org

DF010 PRESENT OR STORED	PUMP MOTOR CIRCUIT.

NOTES	**Conditions for applying the fault finding procedure to stored faults:** The fault is declared present after the brake pedal has been held down + **AC016** Test pump motor actuator command.

Check the **ABS earths** (tightening of the terminal on the earth bolt above the hydraulic assembly).
Check the continuity between the **ABS earth** and **tracks 47 and 16** of the computer connector.
Check the **+ before ignition feed** on **track 1** on the **47-track** connector. Check the condition and position of the **40A** fuse in the engine fuse box.

If the fault appears after the computer has been removed or replaced, remove the computer and check the condition and presence of the internal connections (2 tracks) across the hydraulic assembly.

If the fault recurs, replace the hydraulic assembly (mechanical locking of the pump, etc.).

AFTER REPAIR	Clear the computer memory. Carry out a road test followed by another check with the diagnostic tool.

GETtheMANUALS.org

DF017 PRESENT OR STORED	COMPUTER

NOTES	**Conditions for applying the fault finding procedure to stored faults:** Apply the fault finding procedure whether the fault is present or stored.

Check the connections on the **47-track connector** of the ABS computer.
Check that there are no traces of oxidisation.
If traces of oxidisation are found, you must replace the ABS wiring and the computer. If not, replace only the computer.

Clear the computer memory, exit the diagnostic and switch off the ignition.
Perform a new check using the diagnostic tool. If the fault is still present, contact your Techline.

AFTER REPAIR	Clear the computer memory. Carry out a road test followed by another check with the diagnostic tool.

GETtheMANUALS.org

DF020 PRESENT	TACHOMETRIC INDEX PROGRAMMING

NOTES	**Special notes:** None.

The TEVES MK60 ABS/ESP computer with the tachometry function transmits the vehicle speed signal to all subscribers using this signal (instrument panel, engine management, etc.).
This vehicle speed signal replaces the one supplied by the speed sensor located on the gearbox.
The ABS/ESP computer calculates the vehicle speed from the wheel speed and the tyre circumference.

The tyre circumference must be programmed into the memory of a new computer. This consists of entering an index X using the VP007 Tachometric Index command on the diagnostic tool.

Once the index has been entered using the **VP007** command, clear the computer memory and then switch off the ignition. Use the parameter **PR030** to check that the index entered has been stored correctly.

If the fault is still present, contact your Techline.

AFTER REPAIR	Clear the computer memory. Carry out a road test followed by another check with the diagnostic tool.

GETtheMANUALS.org

DF026 PRESENT OR STORED	FRONT RIGHT-HAND WHEEL SPEED SENSOR CIRCUIT

NOTES	**Special notes:** None.
	Conditions for applying fault finding procedure to a stored fault: Apply the fault finding procedure described below in **DF026 stored**.

DF026 present	***NOTES***	**Special notes:** None.

Check the connection and condition of the sensor and computer connections.
Check the connector on the intermediate connections under the body on the front left-hand wing upper section (**R183**). Disconnect the sensor and check that a voltage of approximately **12 V** is present **under + after ignition feed** at the sensor connector terminals on the computer side.
Is the voltage measured correct?

YES

Swap the 2 front wheel speed sensors over. Clear the computer memory.

Switch off the ignition. Switch on the ignition again.

If the fault initially declared **DF026 Front right-hand wheel speed sensor circuit** has become **DF006 Front left-hand wheel speed sensor circuit**, replace the wheel speed sensor.

If the fault remains on the same side, the wiring between the computer and the sensor is faulty.

Check and ensure the continuity of the following connections:

Sensor connector **track 1** → **track 33** Computer connector
Sensor connector **track 2** → **track 34** Computer connector

If the connection is faulty:

Disconnect the intermediate **2-track R183** connector on the front left-hand upper wing section and check the condition of the connections.

Check and ensure the continuity of the connections between:

Sensor connector **track 1** → **track B** Intermediate connector
Sensor connector **track 2** → **track A** Intermediate connector

Also check the insulation between these connections.

Check and ensure the continuity of the connections between:

Sensor connector **track 33** → **track B** Intermediate connector
Sensor connector **track 34** → **track A** Intermediate connector

Also check the insulation between these connections.

AFTER REPAIR	Clear the computer memory. Carry out a road test followed by another check with the diagnostic tool.

GETtheMANUALS.org

DF026 CONTINUED 1	

NO

Check and ensure the continuity of the following connections:

Sensor connector **track 1** → **track 33** Computer connector
Sensor connector **track 2** → **track 34** Computer connector

If the connection is faulty:

Disconnect the intermediate **2-track R183** connector on the front left-hand upper wing section and check the condition of the connections.

Check and ensure the continuity of the connections between:

Sensor connector **track 1** → **track B** Intermediate connector
Sensor connector **track 2** → **track A** Intermediate connector

Also check the insulation between these connections.

Check and ensure the continuity of the connections between:

Sensor connector **track 33** → **track B** Intermediate connector
Sensor connector **track 34** → **track A** Intermediate connector

Also check the insulation between these connections.

Carry out a visual inspection of the sensor wiring.

If all the checks are correct, contact your Techline.

AFTER REPAIR	Clear the computer memory. Carry out a road test followed by another check with the diagnostic tool.

GETtheMANUALS.org

DF026 CONTINUED 2	FRONT RIGHT-HAND WHEEL SPEED SENSOR CIRCUIT

DF026 stored	*NOTES*	**Special notes:** None.

Check the connection and condition of the sensor and computer connections.
Check the connector on the intermediate connections under the body on the front left-hand wing upper section (**R183**).
Swap the 2 front wheel speed sensors over.
Clear the computer memory.
Carry out a road test and then recheck with the diagnostic tool.

If the fault initially declared **DF026 Front right-hand wheel speed sensor circuit** has become **DF006 Front left-hand wheel speed sensor circuit**, replace the wheel speed sensor.

If the fault remains on the same side, the wiring between the computer and the sensor is faulty.

Check and ensure the continuity of the following connections:

Sensor connector **track 1** → **track 33** Computer connector
Sensor connector **track 2** → **track 34** Computer connector

If the connection is faulty:

Disconnect the intermediate **2-track R183** connector on the front left-hand upper wing section and check the condition of the connections.

Check and ensure the continuity of the connections between:

Sensor connector **track 1** → **track B** Intermediate connector
Sensor connector **track 2** → **track A** Intermediate connector

Also check the insulation between these connections.

Check and ensure the continuity of the connections between:

Sensor connector **track 33** → **track B** Intermediate connector
Sensor connector **track 34** → **track A** Intermediate connector

Also check the insulation between these connections.

AFTER REPAIR	Clear the computer memory. Carry out a road test followed by another check with the diagnostic tool.

GETtheMANUALS.org

DF027 PRESENT OR STORED	REAR RIGHT-HAND WHEEL SPEED SENSOR CIRCUIT

NOTES	**Special notes:** None.
	Conditions for applying fault finding procedure to a stored fault: Apply the fault finding procedure described below in **DF027 stored**.

DF027 present	***NOTES***	**Special notes:** None.

Check the connection and condition of the sensor and the computer.
Disconnect the sensor and check that a voltage of approximately **12 V** is present **under + after ignition feed** at the sensor connector terminals on the computer side.
Is the voltage measured correct?

YES

Swap the 2 rear wheel speed sensors. Clear the computer memory.

Switch off the ignition. Switch on the ignition again.

If the fault initially declared **DF027 Rear right-hand wheel speed sensor circuit** has become **DF027 Rear left-hand wheel speed sensor circuit**, replace the wheel speed sensor.

If the fault remains on the same side, the wiring between the computer and the sensor is faulty.

Check and ensure the continuity of the following connections:

Sensor connector **track 1** → **track 42** Computer connector
Sensor connector **track 2** → **track 43** Computer connector

Also check the insulation between these two connections.

NO

Check and ensure the continuity of the following connections:

Sensor connector **track 1** → **track 42** Computer connector
Sensor connector **track 2** → **track 43** Computer connector

Also check the insulation between these two connections.

Carry out a visual inspection of the sensor wiring.

If all the checks are correct, contact your Techline.

AFTER REPAIR	Clear the computer memory. Carry out a road test followed by another check with the diagnostic tool.

GETtheMANUALS.org

DF027 CONTINUED	

DF027 stored	***NOTES***	**Special notes:** None.

Check the connection and condition of the sensor and computer connections.
Swap the 2 rear wheel speed sensors.
Clear the computer memory.
Carry out a road test and then recheck with the diagnostic tool.

If the fault initially declared **DF027 Rear right-hand wheel speed sensor circuit** has become **DF007 Rear left-hand wheel speed sensor circuit present**, replace the wheel speed sensor.

If the fault remains on the same side, the wiring between the computer and the sensor is faulty.

Check and ensure the continuity of the following connections:

Sensor connector **track 1** → **track 42** Computer connector
Sensor connector **track 2** → **track 43** Computer connector

Also check the insulation between these two connections.

AFTER REPAIR	Clear the computer memory. Carry out a road test followed by another check with the diagnostic tool.

GETtheMANUALS.org

DF028 STORED	FRONT RIGHT-HAND WHEEL SPEED SENSOR SIGNAL

NOTES	**Priorities when dealing with a number of faults:** Deal with fault **DF026 Front right-hand wheel speed sensor circuit** first if it is present.
	Conditions for applying the fault finding procedure to stored faults: The fault is present during: road test (in excess of **12 mph (20 km/h)** for **2 minutes)**.

Check that the wheel speed sensor mounting is in good condition (correct clipping).
Check the sensor/target air gap over one wheel revolution: **0.1 mm < front wheel air gap < 1.1 mm**
Check the conformity of the target: condition, **number of teeth = 48** (using specific command **SC001 Check target teeth**).

Check the connection and the condition of the sensor connectors.
Check the connector on the intermediate connections under the body on the front left-hand wing upper section (**R183**).

Carry out a visual inspection of the sensor wiring and check the condition of the connections on the **47-track computer connector.**

If the results of the checks are correct, reconnect the computer and the wheel speed sensor and clear the computer memory.
Exit the fault finding procedure and carry out a road test. Replace the sensor if the fault recurs.

AFTER REPAIR	Clear the computer memory. Carry out a road test followed by another check with the diagnostic tool.

GETtheMANUALS.org

DF029 STORED	REAR RIGHT-HAND WHEEL SPEED SENSOR SIGNAL

NOTES	**Priorities when dealing with a number of faults:** Deal with fault **DF027 rear right-hand wheel speed sensor circuit** first if it is present.
	Conditions for applying the fault finding procedure to stored faults: The fault is present during: road test (in excess of **12 mph (20 km/h)** for **2 minutes)**.

Check that the wheel speed sensor mounting is in good condition (correct clipping).
Check the sensor/target air gap over one wheel revolution: **0.3 mm < rear wheel air gap < 1.3**
Check the conformity of the target: condition, **number of teeth = 48** (using specific command **SC001 Check target teeth**).

Check the connection and the condition of the sensor connectors.
Carry out a visual inspection of the sensor wiring and check the condition of the connections on the **47-track computer connector.**

If the results of the checks are correct, reconnect the computer and the wheel speed sensor and clear the computer memory.
Exit the fault finding procedure and carry out a road test. Replace the sensor if the fault recurs.

AFTER REPAIR	Clear the computer memory. Carry out a road test followed by another check with the diagnostic tool.

GETtheMANUALS.org

DF047 PRESENT	MULTIPLEX NETWORK (bus off)

NOTES	**Special notes:** None.

Carry out the multiplex network test.

AFTER REPAIR	Clear the computer memory. Carry out a road test followed by another check with the diagnostic tool.

GETtheMANUALS.org

DF056 PRESENT OR STORED	BRAKE PEDAL CONTACT INCONSISTENCY

NOTES	**Conditions for applying the fault finding procedure to stored faults:** The fault is recorded as present when: the brake pedal is depressed.

Depress the brake pedal observing the **ET017 BRAKE PEDAL** status.
Check that the pedal released and pedal depressed positions are registered.

YES	Apply the fault finding procedure described in the interpretation of the **ET017 BRAKE PEDAL** status.

NO	Check the two brake light bulbs and the earth of the rear light units (no earthing of **track 41** across the bulbs when the pedal is not depressed).

AFTER REPAIR	Clear the computer memory. Carry out a road test followed by another check with the diagnostic tool.

GETtheMANUALS.org

DF066 PRESENT	NO INJECTION MULTIPLEX SIGNAL

NOTES	**Special notes:** None.

Carry out the multiplex network test.
If the fault is still present, contact your Techline.

AFTER REPAIR	Clear the computer memory. Carry out a road test followed by another check with the diagnostic tool.

GETtheMANUALS.org

DF075 **STORED**	STEERING WHEEL ANGLE SENSOR SIGNAL.

NOTES	**Conditions for applying the fault finding procedure to stored faults:** The fault is recorded as present following: steering from lock to lock and road test.

After replacing a sensor, program the steering wheel angle sensor using the diagnostic tool by selecting the configuration **VP003 Steering wheel angle sensor**.

Check that the steering wheel angle sensor is correctly fitted and positioned on the steering column.

(With the wheels straight, check that the yellow marker on the steering wheel angle sensor is visible in the centre of the window and check that the connector is correctly connected to the sensor and not to the inert mounting next to the sensor.)

Position the wheels straight and use a diagnostic tool in the parameter category to check that **PR033** is between **-15° and +15°** if not, check that the yellow marker on the steering wheel angle sensor is visible in the centre of the window.

Program the steering wheel angle using the diagnostic tool by selecting the configuration **VP003 Steering wheel angle sensor**.

Exit the fault finding procedure and carry out a road test.
Replace the sensor if the fault recurs.

AFTER REPAIR	Clear the computer memory. Carry out a road test followed by another check with the diagnostic tool.

GETtheMANUALS.org

DF088 PRESENT	BRAKE PRESSURE SENSOR CIRCUIT

NOTES	**Special notes:** None.

Check the condition and correct connection of the brake pressure sensor.

Check the connection and the condition of the computer connectors.

Check and ensure the continuity of the following connections:

Sensor connector **track 1** → **track 19** Computer connector
Sensor connector **track 2** → **track 20** Computer connector
Sensor connector **track 3** → **track 18** Computer connector

Also check the insulation between these connections.

Carry out a visual inspection of the sensor wiring.

Disconnect the pressure sensor and check the presence of a voltage of approximately **5 V** under **+ after ignition feed** between **tracks 1 and 3** of the sensor connector (ignore any new faults caused by this inspection).

If the voltage is approximately **0 V**, contact your Techline.

If the results of the checks are correct, reconnect the computer and the brake pressure sensor and clear the computer memory.

Exit fault finding mode and switch off the ignition.

Switch the ignition on and replace the sensor if the fault recurs.

WARNING
Whenever a brake pressure sensor is replaced, it is essential to calibrate the sensor using the diagnostic tool. Carry out the following operations.
– Do not depress the brake pedal for the entire duration of the operation.
– Configure VP026 Pressure sensor using the diagnostic tool.

AFTER REPAIR	Clear the computer memory. Carry out a road test followed by another check with the diagnostic tool.

GETtheMANUALS.org

DF090 **STORED**	FRONT RIGHT-HAND WHEEL TARGET

NOTES	**Conditions for applying the fault finding procedure to stored faults:** The fault is recorded as present during: road test.

Check that the sensor casing is absent when rotating.
Check that the wheel speed sensor mounting is in good condition (clipping).
Check the conformity of the targets: condition, **number of teeth = 48** (using the **SC001 Check target teeth** command).

If the checks reveal no faults, clear the fault memory.

Exit the fault finding procedure and carry out a road test.

Replace the instrumented bearing if the fault recurs.

AFTER REPAIR	Clear the computer memory. Carry out a road test followed by another check with the diagnostic tool.

GETtheMANUALS.org

DF091 STORED	FRONT LEFT-HAND WHEEL TARGET.

NOTES	**Conditions for applying the fault finding procedure to stored faults:** The fault is recorded as present during: road test.

Check that the sensor casing is absent when rotating.
Check that the wheel speed sensors are correctly mounted (clipped).
Check the conformity of the targets: condition, **number of teeth = 48** (using the **SC001 Check target teeth** command).

If the checks reveal no faults, clear the fault memory.

Exit the fault finding procedure and carry out a road test.

Replace the instrumented bearing if the fault recurs.

AFTER REPAIR	Clear the computer memory. Carry out a road test followed by another check with the diagnostic tool.

GETtheMANUALS.org

DF092 **STORED**	REAR RIGHT-HAND WHEEL TARGET

NOTES	**Conditions for applying the fault finding procedure to stored faults:** The fault is recorded as present after: road test.

Check that the sensor casing is absent when rotating.
Check that the wheel speed sensors are correctly mounted (clipped).
Check the conformity of the targets: condition, **number of teeth = 48** (using the **SC001 Check target teeth** command).

If the checks reveal no faults, clear the fault memory.

Exit the fault finding procedure and carry out a road test.

Replace the instrumented bearing if the fault recurs.

AFTER REPAIR	Clear the computer memory. Carry out a road test followed by another check with the diagnostic tool.

GETtheMANUALS.org

DF093 **STORED**	REAR LEFT-HAND WHEEL TARGET.

NOTES	**Conditions for applying the fault finding procedure to stored faults:** The fault is recorded as present during: road test.

Check that the sensor casing is absent when rotating.
Check that the wheel speed sensors are correctly mounted (clipped).
Check the conformity of the targets: condition, **number of teeth = 48** (using the **SC001 Check target teeth** command).

If the checks reveal no faults, clear the fault memory.

Exit the fault finding procedure and carry out a road test.

Replace the instrumented bearing if the fault recurs.

AFTER REPAIR	Clear the computer memory. Carry out a road test followed by another check with the diagnostic tool.

GETtheMANUALS.org

DF094 / DF095 PRESENT OR STORED	COMPUTER SUPPLY VOLTAGE

NOTES	**Special notes:** Apply the fault finding procedure below, whether the fault is indicated as present or stored. This fault appears when the engine is started with a battery charger or a **24-volt** battery. The undervoltage fault is not stored unless the vehicle speed is above **12 mph (20 km/h)**.
	Conditions for applying the fault finding procedure to stored faults: Apply the fault finding procedure whether the fault is present or stored.

Check for the presence of **+ 12 before ignition feed** on **track 32** of the **47-track** computer connector.
Perform the operations necessary to obtain the correct **+ after ignition feed** voltage supply to the computer:

10 V < correct voltage < 17 V.

– Battery charge check.
– Charging circuit check.
– Check the tightness and condition of the battery terminals.

Check for **+ after ignition feed** on **track 4** of the **47-track** computer connector (**5 A** fuse).
Check for **+ before ignition feed** on **track 1** and **32** of the **47-track** computer connector (**30A** and **40A fuses** located in the engine fuse box).
Check the earths are in good condition (properly tightened, not oxidised etc.), check the tightness of the terminal on the earth bolt located above the hydraulic power unit.

AFTER REPAIR	Clear the computer memory. Carry out a road test followed by another check with the diagnostic tool.

GETtheMANUALS.org

DF096 PRESENT	COMPUTER INTERNAL ELECTRONIC IRREGULARITY

NOTES	**Special notes:** None.

Using the diagnostic tool, check the **FUNCTION CODE NUMBER** (CLIP: identification screen and NXR: parameter screen **PR041**).

– If the **function code number is C1** (the system is fitted with electric emergency braking assistance), start the engine and run command **AC161 Brake servo solenoid valve**.

If **DF185 Brake servo/internal feed circuit** appears, apply the fault finding procedure associated with this fault.

If **DF185** does not appear, check with your Techline.

– If the **function code number is E0 or E1** (the system is fitted with manual emergency brake assist), contact your Techline.

AFTER REPAIR	Clear the computer memory. Carry out a road test followed by another check with the diagnostic tool.

GETtheMANUALS.org

DF097 PRESENT	NO AUTOMATIC TRANSMISSION MULTIPLEX SIGNAL.

NOTES	**Special notes:** None.

Carry out the multiplex network test.
If the fault is still present, contact your Techline.

AFTER REPAIR	Clear the computer memory. Carry out a road test followed by another check with the diagnostic tool.

GETtheMANUALS.org

DF098 PRESENT	NO UCH MULTIPLEX SIGNAL

NOTES	**Special notes:** None.

Carry out the multiplex network test.
If the fault is still present, contact your Techline.

AFTER REPAIR	Clear the computer memory. Carry out a road test followed by another check with the diagnostic tool.

GETtheMANUALS.org

DF099 PRESENT	ABS PRIVATE MULTIPLEX NETWORK (bus off)

NOTES	**Special notes:** None.

Ensure that the connections and the position of any special equipment, such as CB, car phone, amplifier, etc. are not preventing the ABS from working correctly.

Use the diagnostic tool to check the **FUNCTION CODE NUMBER** (CLIP: identification screen and NXR: parameter screen PR041).

– **E0, C1, E1** indicates that the system is fitted with a combined sensor.

Check the connection and condition of the combined sensor connectors and the steering wheel angle sensor.

– Check the continuity and insulation of the connections between:

Computer connector	**Track 29**	→	**Track 3**	Steering wheel angle sensor + feed
		→	**Track 2**	Combined sensor
Computer connector	**Track 25**	→	**Track 2**	Steering wheel angle sensor
		→	**Track 1**	Combined sensor

– If the fault is still present, switch off the ignition, disconnect the combined sensor, and then switch the ignition back on.
Replace the combined sensor if **DF099** is stored. Ignore any new faults that appear during the operation.

– If **DF099** remains present, switch off the ignition, reconnect the combined sensor and disconnect the steering wheel angle sensor. Switch ignition back on.
Replace the steering wheel angle sensor if **DF099** is stored. Ignore any new faults that appear during the operation.

If the checks are correct, contact your Techline.

AFTER REPAIR	Clear the computer memory. Carry out a road test followed by another check with the diagnostic tool.

GETtheMANUALS.org

DF100 PRESENT	NO STEERING WHEEL ANGLE MULTIPLEX SIGNAL

NOTES	**Special notes:** None.

Check the connection and condition of the steering wheel angle sensor and computer connectors.

Check the continuity of the following connections:

Computer connector **Track 25** → **Track 2** of the steering wheel angle sensor
Computer connector **Track 29** → **Track 3** of the steering wheel angle sensor

Check for the presence of **+ 12 before ignition feed** between **tracks 1 and 5** of the steering wheel angle sensor.

If the fault is still present, replace the steering wheel angle sensor.

AFTER REPAIR	Clear the computer memory. Carry out a road test followed by another check with the diagnostic tool.

GETtheMANUALS.org

DF101 PRESENT	NO COMBINED SENSOR MULTIPLEX SIGNAL

NOTES	**Special notes:** None.

Check the connection and condition of the combined sensor and computer connectors.
Carry out a visual inspection of the sensor wiring.

Check and ensure continuity and the insulation of the connections between:

Sensor connector **Track 1** → **track 25** computer connector
Sensor connector **Track 2** → **track 29** computer connector
Sensor connector **Track 3** → **track 6** computer connector
Sensor connector **Track 5** → **track 24** computer connector

Also check the insulation between these connections.

Measure the voltage across **tracks 5 and 3** of the combined sensor connector under **+ after ignition feed**.
Replace the computer if the voltage is not approximately the same as the **+ after ignition feed**.

If the results of the checks are correct, reconnect the computer and the combined sensor and clear the computer memory.

Exit fault finding mode and switch off the ignition.

Switch the ignition on and replace the sensor if the fault recurs.

AFTER REPAIR	Clear the computer memory. Carry out a road test followed by another check with the diagnostic tool.

GETtheMANUALS.org

DF102 PRESENT	SAVE CALIBRATION. (Computer configuration and sensor calibration)

NOTES	**Special notes:** None.

Using the diagnostic tool, run the following configuration commands:

– **CF077** ABS/ESP calibration.
Calibration is performed by selecting the engine type fitted to the vehicle.

– Adaptive cruise control:
Select command **CF078** on the diagnostic tool.

– Gearbox type:
Select command **CF079** on the diagnostic tool.

– Vehicle parameters (drive torque index configuration + brake type):
Select command **CF080** on the diagnostic tool.

– To program the steering wheel angle:
Select command **VP003** on the diagnostic tool.

– To program the tachometric index:
Select command **VP007** on the diagnostic tool.

If the calibration attempt fails, contact your Techline.

AFTER REPAIR	Clear the computer memory. Carry out a road test followed by another check with the diagnostic tool.

GETtheMANUALS.org

DF103 PRESENT	NO MULTIPLEX ACC SIGNALS

NOTES	**Special notes:** None.

Carry out the multiplex network test.

AFTER REPAIR	Clear the computer memory. Carry out a road test followed by another check with the diagnostic tool.

GETtheMANUALS.org

DF104 PRESENT	COMBINED SENSOR INTERNAL ELECTRONIC IRREGULARITY

NOTES	**Special notes:** None.

Replace the combined sensor.

WARNING
Each time a combined pressure sensor is replaced, it is essential to calibrate the sensor using the diagnostic tool. Carry out the following operations.
– Position the vehicle on a flat, horizontal surface.
– Configure parameter VP025 Transverse acceleration sensor using the diagnostic tool.

AFTER REPAIR	Clear the computer memory. Carry out a road test followed by another check with the diagnostic tool.

GETtheMANUALS.org

DF107 PRESENT	STEERING WHEEL ANGLE SENSOR IDENTIFIER

NOTES	**Special notes:** None.

Program the steering wheel angle using the diagnostic tool by selecting the configuration **VP003 Steering wheel angle sensor**.

If attempts to program fail, replace the steering wheel angle sensor.

AFTER REPAIR	Clear the computer memory. Carry out a road test followed by another check with the diagnostic tool.

GETtheMANUALS.org

DF108 PRESENT OR STORED	STEERING WHEEL ANGLE SENSOR

NOTES	**Special notes:** Ignore this fault if the vehicle is on the dynamometer or if a jack has been placed underneath the vehicle and has not had an effect on the steering wheel angle though it has generated a vehicle speed.
	Conditions for applying the fault finding procedure to stored faults: Apply the fault finding procedure whether the fault is present or stored.

Check the connection and condition of the steering wheel angle sensor and computer connectors.

Using the diagnostic tool, check the **FUNCTION CODE NUMBER** (CLIP: identification screen and NXR: parameter screen **PR041**).

If the function code number is E0, C1, E1:
– Check the continuity of the connections between:
Computer connector **Track 25** → **Track 2** steering wheel angle sensor
Computer connector **Track 29** → **Track 3** steering wheel angle sensor

Check the presence of **+ 12 after ignition feed** between **tracks 1 and 5** of the steering wheel angle sensor connector.

If the results of the checks are correct, reconnect the computer and the steering wheel angle sensor and clear the computer memory.
Exit the fault finding procedure and carry out a road test. Replace the sensor if the fault recurs.

AFTER REPAIR	Clear the computer memory. Carry out a road test followed by another check with the diagnostic tool.

GETtheMANUALS.org

DF109 PRESENT OR STORED	BRAKE PRESSURE SENSOR SIGNAL (consistency)

NOTES	**Special notes:** Deal with faults **DF088** Brake pressure sensor circuit and **DF056** Brake pedal contact consistency first if they are present.
	Conditions for applying the fault finding procedure to stored faults: Apply the fault finding procedure whether the fault is present or stored.

Ensure that there are no leaks in the hydraulic circuit.

When the engine is switched off, depress the brake pedal several times. After this has been performed, the pedal should remain hard.

If the pressure sensor has been removed or refitted, an air bubble may have become trapped in the pressure sensor thus altering the reading issued by the sensor. Remove the sensor and refill with brake fluid before refitting.

If the fault is still present, replace the brake pressure sensor.

If the checks reveal no faults, clear the computer memory.
Exit the fault finding procedure and carry out a road test.
Replace the sensor if the fault recurs.

AFTER REPAIR	Clear the computer memory. Carry out a road test followed by another check with the diagnostic tool.

GETtheMANUALS.org

DF110 PRESENT OR STORED	SENSOR SUPPLY (brake pressure sensor)

NOTES	**Special notes:** Check the **FUNCTION CODE NUMBER** (CLIP: identification screen and NXR: parameter screen **PR041**).
	Conditions for applying the fault finding procedure to stored faults: Apply the fault finding procedure whether the fault is present or stored.

If the function code number is: **E0, C1, E1**

Check the presence of **+ 5 Volts** under **after ignition feed** between **tracks 1 and 3** of the brake pressure sensor.

If the voltage is incorrect, check the wiring harness.

Ensure that the computer and the brake pressure sensor connectors are in good condition and correctly connected.
Check and ensure the continuity of the following connections:

Sensor connector track 1 → track 19 Computer connector
Sensor connector track 2 → track 20 Computer connector
Sensor connector track 3 → track 18 Computer connector

Also check the insulation between these connections.

If the checks show no faults, replace the brake pressure sensor.

Clear the computer memory and road test the vehicle then recheck with the diagnostic tool.

If the fault is still present, contact your Techline.

AFTER REPAIR	Clear the computer memory. Carry out a road test followed by another check with the diagnostic tool.

GETtheMANUALS.org

DF111 PRESENT	BRAKE PEDAL TRAVEL SENSOR CIRCUIT

NOTES	**Special notes:** Deal with fault **DF110** Sensor supply first if it is present.

Check the condition and connection of the brake pedal travel sensor connector.

Check the connection and the condition of the computer connectors.
Check and ensure the continuity of the following connections:

Sensor connector **Track 1** → **track 7** Computer connector
Sensor connector **Track 2** → **track 5** Computer connector
Sensor connector **Track 3** → **track 3** Computer connector

Also check the insulation between these connections.

Carry out a visual inspection of the sensor wiring.

If the results of the checks are correct, reconnect the computer and the brake pedal travel sensor and clear the computer memory.
Carry out a road test and then recheck with the diagnostic tool.
Replace the sensor if the fault recurs.

AFTER REPAIR	Clear the computer memory. Carry out a road test followed by another check with the diagnostic tool.

GETtheMANUALS.org

DF112 **PRESENT**	BRAKE PEDAL TRAVEL INCONSISTENCY

NOTES	**Special notes:** None.

Using the diagnostic tool, check on the statuses screen that **ET017** detects the depressed and released positions of the brake pedal. If they are not detected, use the fault finding procedure for **ET017**.
Check the brake pedal position using **PR039** on the diagnostic tool. – Pedal released: **PR039** < 5.5 mm. If the value is different, replace the sensor.

AFTER REPAIR	Clear the computer memory. Carry out a road test followed by another check with the diagnostic tool.

GETtheMANUALS.org

DF114 PRESENT	BRAKE SERVO MICROSWITCH CIRCUIT

NOTES	**Special notes:** None.

Check the condition and connection of the brake servo connector.

Check the presence of **+ 12 Volts after ignition feed** on the disconnected brake servo connector between **track 5** and the vehicle **earth**.

If the voltage is incorrect, check the wiring loom.

Check the continuity and insulation of the connection between:

Servo connector **track 5** ⟶ **track 28** Computer connector

If the continuity and insulation have been checked and the voltage remains incorrect, replace the ABS/ESP computer.

Check that the computer connections and the **6 tracks** of the brake servo are correctly connected and in good condition.
Check and ensure the continuity of the following connections:

Servo connector **track 2** ⟶ **track 30** Computer connector
Servo connector **track 1** ⟶ **track 27** Computer connector

Also check the insulation between these connections.

If the results of the checks are correct, reconnect the computer and the brake servo and then clear the computer memory.
Replace the sensor if the fault recurs.

AFTER REPAIR	Clear the computer memory. Carry out a road test followed by another check with the diagnostic tool.

GETtheMANUALS.org

DF115 PRESENT	BRAKE SERVO MICROSWITCH STATUS CONSISTENCY.

NOTES	**Special notes:** None.

Ensure that the brake switch is in correct working order by carrying out the **ET017** (interpretation of statuses) procedure.
Check the condition and connection of the brake servo connector. Check the continuity between **tracks 30 and 28** of the computer connector with the brake pedal released. Check the continuity between **tracks 27 and 28** of the computer connector with the brake pedal depressed.
Check the brake pedal position using **PR039** on the diagnostic tool. – Pedal released: **PR039** < 5.5 mm. If the value is different, replace the sensor.

AFTER REPAIR	Clear the computer memory. Carry out a road test followed by another check with the diagnostic tool.

GETtheMANUALS.org

DF116 PRESENT	VEHICLE CONFIGURATION PROGRAMMING

NOTES	**Special notes:** None.

Run the configuration command **CF080 Vehicle parameters** in order to define the engine type fitted to the vehicle.
If configuration attempts fail, contact your Techline.

AFTER REPAIR	Clear the computer memory. Carry out a road test followed by another check with the diagnostic tool.

GETtheMANUALS.org

DF117 PRESENT	ABS/ESP CALIBRATION PROGRAMMING

NOTES	**Special notes:** None.

Run the configuration command **CF077** ABS/ESP CALIBRATION.

Calibration is performed by selecting the engine type fitted to the vehicle.

If the computer configuration fails, contact your Techline.

AFTER REPAIR	Clear the computer memory. Carry out a road test followed by another check with the diagnostic tool.

GETtheMANUALS.org

DF118 PRESENT	VEHICLE OPTIONS PROGRAMMING

NOTES	**Special notes:** None.

Run the configuration commands **CF078 Cruise control distance control** and **CF079 Gearbox type** to define the vehicle equipment type.

If the computer configuration fails, contact your Techline.

AFTER REPAIR	Clear the computer memory. Carry out a road test followed by another check with the diagnostic tool.

GETtheMANUALS.org

DF119 PRESENT	GEARBOX TYPE CONFIGURATION (consistency between computer configuration and multiplex network signals)

NOTES	**Priorities when dealing with a number of faults:** Deal with fault **DF097 "No automatic transmission multiplex signal"** first if it is present.

Run the configuration command **CF079 Gearbox type** to reconfigure the gearbox type.

If the computer configuration fails, contact your Techline.

AFTER REPAIR	Clear the computer memory. Carry out a road test followed by another check with the diagnostic tool.

GETtheMANUALS.org

DF120 PRESENT OR STORED	INJECTION MULTIPLEX SIGNALS CONSISTENCY.

NOTES	**Special note:** Although stored in the computer, this fault is caused by the injection system rather than ABS/ESP components. It is therefore necessary to perform fault finding on the injection. **Note:** The injection computer does not always store these transient faults as quickly as the ABS/ESP computer. If no fault is stored in the injection computer, start the engine; if there is no fault present, contact your Techline. Once the fault in the injection system has been remedied, clear the ABS/ESP computer memories. The injection multiplex signal is transmitted to the ABS/ESP computer via the Protection and Switching Unit.

Consult the fault finding procedure for the injection.
If the fault is still present, contact your Techline.

AFTER REPAIR	Clear the computer memory. Carry out a road test followed by another check with the diagnostic tool.

GETtheMANUALS.org

DF121 PRESENT OR STORED	TORQUE REQUESTED NOT AVAILABLE

NOTES	**Special note:** Although stored in the computer, this fault is caused by the injection system rather than ABS/ESP components. It is therefore necessary to perform fault finding on the injection. **Note:** The injection computer does not always store these transient faults as quickly as the ABS/ESP computer. If no fault is stored in the injection computer, start the engine; if there is no fault present, contact your Techline. Once the fault in the injection system has been remedied, clear the ABS/ESP computer memories. The injection multiplex signal is transmitted to the ABS/ESP computer via the Protection and Switching Unit.

Consult the fault finding procedure for the injection.
If the fault is still present, contact your Techline.

AFTER REPAIR	Clear the computer memory. Carry out a road test followed by another check with the diagnostic tool.

GETtheMANUALS.org

DF122 PRESENT OR STORED	NO INJECTION MULTIPLEX SIGNALS

NOTES	**Special note:** Although stored in the computer, this fault is caused by the injection system rather than ABS/ESP components. It is therefore necessary to perform fault finding on the injection. **Note:** The injection computer does not always store these transient faults as quickly as the ABS/ESP computer. If no fault is stored in the injection computer, start the engine; if there is no fault present, contact your Techline. Once the fault in the injection system has been remedied, clear the ABS/ESP computer memories. The injection multiplex signal is transmitted to the ABS/ESP computer via the Protection and Switching Unit.

Consult the fault finding procedure for the injection.
If the fault is still present, contact your Techline.

AFTER REPAIR	Clear the computer memory. Carry out a road test followed by another check with the diagnostic tool.

GETtheMANUALS.org

DF125 PRESENT	COMBINED SENSOR SUPPLY

NOTES	**Priorities when dealing with a number of faults:** Deal with fault **DF094/095** "**Computer supply voltage** first if it is present.

Check the connection and condition of the combined sensor and computer connectors.

Switch the ignition on and check the presence of the + after ignition feed between **tracks 3 and 5** of the sensor connector.

If the voltage is correct, replace the combined sensor.

Check and ensure continuity and insulation of the following connections:

Sensor connector **Track 3** ⟶ **Track 6** computer connector

Sensor connector **Track 5** ⟶ **Track 24** computer connector

Also check the insulation between these connections.

If these checks are correct, contact your Techline.

AFTER REPAIR	Clear the computer memory. Carry out a road test followed by another check with the diagnostic tool.

GETtheMANUALS.org

DF126 PRESENT OR STORED	COMBINED SENSOR SIGNAL PLAUSIBILITY

NOTES	**Conditions for applying the fault finding procedure to stored faults:** Apply the fault finding procedure whether the fault is present or stored.

Check that the combined sensor is fitted in the right direction, is in good condition and correctly tightened to **8 Nm** (the combined sensor is located under the central console between the gear lever and rear heater).

Check the connection and condition of the combined sensor connector.
Ensure that the connections, approval and position of any special equipment such as CB, car phone, amplifier, bass speaker (subwoofer type), etc. are not preventing the ABS from working correctly.

If the results of the checks are correct, reconnect the combined sensor and clear the computer memory.

Replace the combined sensor if the fault recurs.

AFTER REPAIR	Clear the computer memory. Carry out a road test followed by another check with the diagnostic tool.

GETtheMANUALS.org

DF127 PRESENT	TEMPERATURE SENSOR CIRCUIT

NOTES	**Special notes:** None.

Contact your Techline.

AFTER REPAIR	Clear the computer memory. Carry out a road test followed by another check with the diagnostic tool.

GETtheMANUALS.org

DF155 PRESENT	ELECTRONIC STABILITY PROGRAM FUNCTION

NOTES	**Special notes:** It is normal for this fault to occur after the vehicle has been driven on a race track (involving high transverse acceleration and without a steering angle value). Ensure that the fault does not occur after the vehicle has been driven at low speed.

Ensure that the transverse acceleration sensors/yaw angle or combined sensor are correctly fixed to the board and that the whole is fixed to the floor.

Check **PR033 "Steering wheel angle"** with the wheels straight.

Program the steering wheel angle using the diagnostic tool by selecting the configuration **VP003 Steering wheel angle sensor**.
Replace the steering wheel angle sensor if the calibration has failed or if the angular value is not between **± 15**.

AFTER REPAIR	Clear the computer memory. Carry out a road test followed by another check with the diagnostic tool.

GETtheMANUALS.org

DF171 PRESENT OR STORED	ADAPTIVE CRUISE CONTROL

NOTES	**Conditions for applying the fault finding procedure to stored faults:** The fault is declared present when: a road test is carried out with the adaptive cruise control operational.

This fault appears when a multiplex connection fault arises between the ESP computer and the adaptive cruise control computer.

Apply the fault finding procedure for the multiplex network.

If the fault is still present, consult the fault finding procedure for the adaptive cruise control

AFTER REPAIR	Clear the computer memory. Carry out a road test with the adaptive cruise control operational then test it again with the diagnostic tool.

GETtheMANUALS.org

DF172 **PRESENT**	DISTANCE LIMITER DECELERATION CONTROL

NOTES	**Special notes:** None.

Apply the fault finding procedure for the multiplex network.

If the fault is still present, test the adaptive cruise control system using the diagnostic tool.

If the fault is still present, consult the fault finding procedure for the adaptive cruise control

AFTER REPAIR	Clear the computer memory. Carry out a road test with the adaptive cruise control operational then test it again with the diagnostic tool.

GETtheMANUALS.org

DF173 STORED	BRAKE SERVO SOLENOID VALVE

NOTES	**Conditions for applying the fault finding procedure to stored faults:** The fault is declared present when: the driver requests adaptive cruise control.

Check the condition and connection of the brake servo connector.

Check that the **47-track** computer connections and the **6 tracks** of the brake servo are correctly connected and in good condition.
Check and ensure the continuity of the following connections:

Servo connector **track 4** → **track 17** Computer connector
Servo connector **track 3** → **track 31** Computer connector

Also check the insulation between these connections.

Visually inspect the brake servo wiring.

Check the resistance of the brake servo **R = 2 Ω**. If the resistance is incorrect, replace the brake servo.

Check for the presence of approximately **+ 12 Volts after ignition feed** on the brake servo connector (connected) between **track 4** and **earth**.

If the voltage is incorrect, contact your Techline.

If the results of the checks are correct, reconnect the computer and the brake servo and then clear the computer memory.
If the fault is still present, consult the fault finding procedure for adaptive cruise control.
If the fault reappears, contact your Techline.

AFTER REPAIR	Clear the computer memory. Carry out a road test with the adaptive cruise control operational then test it again with the diagnostic tool.

GETtheMANUALS.org

DF174 **STORED**	DISTANCE LIMITER BRAKE SERVO SOLENOID VALVE

NOTES	**Conditions for applying the fault finding procedure to stored faults:** The fault is declared present when: the driver requests adaptive cruise control.

Check the condition and connection of the brake servo connector.

Check that the **47-track** computer connections and the **6 tracks** of the brake servo are correctly connected and in good condition.
Check and ensure the continuity of the following connections:

Servo connector **track 4** → **track 17** Computer connector
Servo connector **track 3** → **track 31** Computer connector

Also check the insulation between these connections.

Visually inspect the brake servo wiring.

Check the resistance of the brake servo **R = 2 Ω**. If the resistance is incorrect, replace the brake servo.

Check for the presence of approximately **+ 12 Volts after ignition feed** on the brake servo connector (connected) between **track 4** and **earth**.

If the voltage is incorrect, contact your Techline.

If the results of the checks are correct, reconnect the computer and the brake servo and then clear the computer memory.
If the fault is still present, consult the fault finding procedure for adaptive cruise control.
If the fault reappears, contact your Techline.

AFTER REPAIR	Clear the computer memory. Carry out a road test with the adaptive cruise control operational then test it again with the diagnostic tool.

GETtheMANUALS.org

DF176 **DF177** **DF178** **DF179** **STORED**	WHEEL SENSOR FREQUENCY

NOTES	**Priorities when dealing with a number of faults:** Deal with the wheel speed sensor circuit fault first, if there are two faults on a single sensor.
	Conditions for applying the fault finding procedure to stored faults: The fault is present during: road test (in excess of **12 mph (20 km/h)** for **2 minutes)**.

Check that the wheel speed sensor mounting is in good condition (correct clipping).
Check the sensor/target air gap over one wheel revolution: **0.1 mm < front wheel air gap < 1.1 mm**.
0.3 mm < rear wheel air gap < 1.3 mm.

Check the conformity of the target: condition, **number of teeth = 48** (using specific command **SC001 Check target teeth**).

Check the connection and the condition of the sensor connectors.

Check the connector on the intermediary connections under the body on the front left-hand wing upper section (**R183**).

Carry out a visual inspection of the sensor wiring and check the condition of the connections on the **47-track computer connector.**

If the results of the checks are correct, reconnect the computer and the wheel speed sensor and clear the computer memory.
Exit the fault finding procedure and carry out a road test. Replace the sensor if the fault recurs.

AFTER REPAIR	Clear the computer memory. Carry out a road test over **12 mph (20 km/h)** for **2 minutes** then carry out a new test with the diagnostic tool.

GETtheMANUALS.org

DF185 PRESENT OR STORED	BRAKE SERVO SOLENOID VALVE CIRCUIT / INTERNAL SUPPLY

NOTES	**Special notes:** Check the **FUNCTION CODE NUMBER** (CLIP: identification screen and NXR: parameter screen PR041).
	Conditions for applying the fault finding procedure to stored faults: Apply the fault finding procedure whether the fault is present or stored.

If the function code number is: C1

Check the condition and connection of the brake servo connector.

Check that the computer connections and the 6 tracks of the brake servo are correctly connected and in good condition.
Check and ensure the continuity of the following connections:

- Servo connector **track 4** → **track 17** Computer connector
- Servo connector **track 3** → **track 31** Computer connector

Also check the insulation between these connections.

Visually inspect the brake servo wiring.

Check the resistance of the brake servo **R = 2 Ω**. If the resistance is incorrect, replace the brake servo.

Check the presence of **+ 12 Volts after ignition feed** on the brake servo connector between **track 4** and the **earth**. If the voltage is incorrect, contact your Techline.

If the results of the checks are correct, reconnect the computer and the brake servo and then clear the computer memory.
Replace the brake servo if the fault recurs.

If the function code number is: E0 or E1

Contact your Techline.

AFTER REPAIR	Clear the computer memory. Carry out a road test followed by another check with the diagnostic tool.

GETtheMANUALS.org

NOTES	Only carry out conformity check after a full check using the diagnostic tool.

Order	Function	Parameter or status Checked or action	Display and notes	Fault finding
1	Diagnostic tool dialogue	-	**ABS/ESP MK60**	**ALP1**
2	Computer configuration	**PR030:** TACHOMETRIC INDEX	Check that the index entered corresponds to the tyres fitted to the vehicle (refer to the Help section)	None
3	Brake pedal not depressed detection	**ET017:** BRAKE PEDAL	"Released" status confirmed, brake pedal not depressed	**ET017**
4	Depressed brake pedal detection	**ET017:** BRAKE PEDAL	"Depressed" status confirmed, brake pedal fully depressed	**ET017**
5	Detection of Electronic Stability Program activation	**ET023:** ESP start/stop BUTTON	Depressed status confirmed when button is pressed	**ET023**
6	Detection of Electronic Stability Program activation	**ET023:** ESP start/stop BUTTON	Released status confirmed when button is released	**ET023**

GETtheMANUALS.org

Use of command modes:

Before using the command modes, check that the battery charge is sufficient

Control of the wheel solenoid valves in order to check the hydraulic system:

Raise the vehicle in order to be able to rotate the wheels, and check that they rotate freely.
Keep the brake pedal depressed to prevent the wheel being tested from being turned by hand (do not brake so firmly that full braking power is reached).

Select and confirm the command of the wheel being examined (Front left-hand wheel solenoid valves, etc.)

⟶ Turn the wheel in question by hand; five locking/unlocking cycles should be detected.

Pump motor control:

Select the Test pump motor command.

⟶ Confirm motor operation for 5 seconds

Bleeding the hydraulic circuits:

Apply the procedure described in the Bleeding the circuits section of the repair procedure Technical Note.

Summary of the FUNCTION CODES:

– **C1:** Electronic ABS + EBA + ESP for ACC + CLUSTER + UNDER-STEERING CONTROL
– **E0:** Mechanical ABS + EBA + ESP + CLUSTER
– **E1:** Mechanical ABS + EBA + ESP + CLUSTER + UNDER-STEERING CONTROL

Electrical EBA: System equipped with electrical emergency brake assist.

Mechanical EBA: System equipped with mechanical emergency brake assist.

ESP: Electronic Stability Program.

CLUSTER (combined sensor): a single sensor combining the yaw sensor and transverse acceleration sensor functions.

ACC: Adaptive cruise control.

CSV: Under-steer control.

What is the difference between an ABS/ESP system with mechanical EBA or electrical EBA?

Electrical EBA has extra components which do not feature in mechanical EBA, such as:
– A brake light cut-off relay.
– A brake servo solenoid valve.
– A brake potentiometer (brake pedal travel).

Depending on the function code, certain statuses or parameters on the diagnostic tool will not function.

GETtheMANUALS.org

REPLACING THE COMPUTER:

After replacing a computer, configure as follows:

– **tachometric index configuration.**

The TEVES MK60 ABS computer with the tachometry function supplies the vehicle speed signal to all subscribers in the vehicle using this information (instrument panel, engine management, etc.).
This vehicle speed signal replaces the one supplied by the speed sensor located on the gearbox.
The ABS computer calculates the vehicle speed from the speed of the wheels and the circumference of the tyres fitted on the vehicle.

The tyre circumference must be programmed into the memory of a new computer. This consists of entering an index X using the VP007 Tachometric Index command on the diagnostic tool.

Once the index has been entered using the **VP007** command, clear the computer memory and then switch off the ignition. Use the **PR030** parameter to check that the index has been stored correctly.

– ABS/ESP calibration:

Select command **CF077** on the diagnostic tool.

– Adaptive cruise control:

Select command **CF078** on the diagnostic tool.

– Gearbox type:

Select command **CF079** on the diagnostic tool.

– Vehicle parameters (drive torque index configuration + brake type):

Select command **CF080** on the diagnostic tool.

– To program the steering wheel angle:

Select command **VP003** on the diagnostic tool.

GETtheMANUALS.org

BRAKE LIGHT COATED WIRING CONNECTED TO UNDERSTEER CONTROL (E1, C1 FUNCTION CODE) + LIGHTING SWITCH OFF in adaptive cruise control function (C1 FUNCTION CODE).

The **function code** is available on the **PARAMETERS (PR041)** screen or the **IDENTIFICATION** screen on the diagnostic tool.

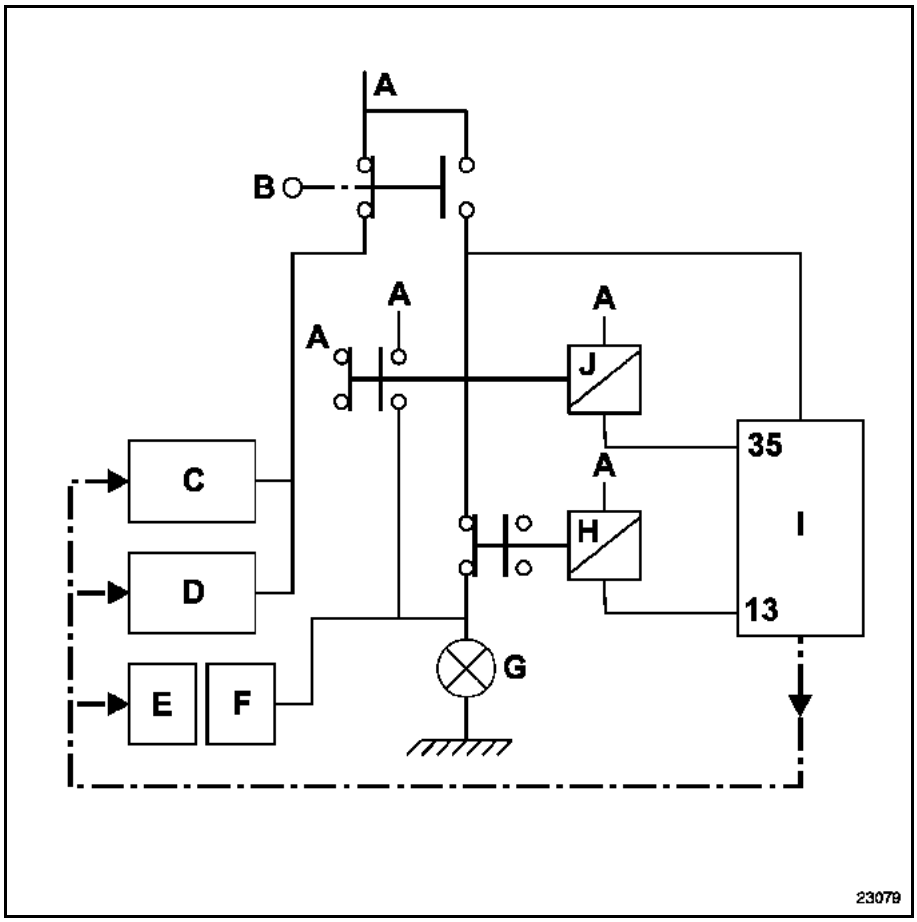

- **A + after ignition feed.**
- **B Brake lights switch.**
- **C Injection computer.**
- **D Automatic transmission computer.**
- **E UCH.**
- **F Passenger compartment relay and fuse box.**
- **G Brake lights.**
- **H Lights off relay.**
- **I ABS / ESP computer.**
- **J Ignition relay.**
- **Track 35 of the 35-track ABS/ESP computer connector.**
- **Track 13 of the 13-track ABS/ESP computer (not connected if mechanical EBA).**

GETtheMANUALS.org

ET017	BRAKE PEDAL

NOTES	**Special notes:** Only perform the checks if the depressed and released statuses are not consistent with the position of the pedal. Refer to the diagrams in the **Help** section.

STATUS Released brake pedal depressed.

If brake lights operate:

– Check the continuity of the connection between **track A3** of the brake light switch connector and **track 41** of the computer connector.

If the brake lights do not operate:

– Check the condition and fitting of the brake light switch and brake lights fuse.
– Check that there is **+ after ignition feed** on **tracks A1 and B1** of the brake switch connector.
– Remove the brake light switch and check that it is operating correctly:

	Continuity between tracks	Insulation between tracks
Switch depressed (Brake pedal released)	**A1 and B3**	**A3 and B1**
Switch released (Brake pedal depressed)	**A3 and B1**	**A1 and B3**

– Replace the switch if necessary. Check the continuity of the connection between **track A3** of the brake light switch connector and **track 41** of the computer connector.
– Check the condition and ensure the continuity of the connection between **track A3** of the brake switch connector and the brake lights.

Depressed STATUS brake pedal released.

– Check the condition and fitting of the brake light switch and brake lights fuse.
– Remove the brake light switch and check that it is operating correctly:

	Continuity between tracks	Insulation between tracks
Switch depressed (Brake pedal released)	**A1 and B3**	**A3 and B1**
Switch released (Brake pedal depressed)	**A3 and B1**	**A1 and B3**

– Replace the switch if necessary.
– Check the insulation against **12 V** of the connection between **track A3** of the brake switch connector and **track 41** of the computer connector.
– If the switch works correctly and **PR041** is **E1 / C1**, check that the ignition relay is working (contact sticking, permanent command. Check if the status works normally when the relay is removed).

AFTER REPAIR	Carry out a road test and then a test with the diagnostic tool.

GETtheMANUALS.org

ET023	ESP start/stop BUTTON

NOTES	**Special notes:** Only perform the checks if the pressed and released statuses are not consistent with the position of the button.

STATUS Button released

Ensure that the ESP on/off switch connector is in good condition and correctly connected.

Repair if necessary.

Check there is no continuity between **tracks A2 and B1** in the released position of the switch. If there is continuity, replace the switch.

Ensure insulation against earth of the connection between:

Switch connector **Track B1** ⟶ **Track 38** computer connector

STATUS Button pressed

Ensure that the ESP on/off switch connector is in good condition and correctly connected.
Repair if necessary.

Check that there is continuity between **tracks A2 and B1** in the pressed position of the switch. If there is no continuity, replace the switch.

Check that there is earth on **track A2** of the switch connector.

AFTER REPAIR	Carry out a road test and then a test with the diagnostic tool.

ANTI-LOCK BRAKING SYSTEM
Fault finding - Customer complaints

GETtheMANUALS.org

NOTES	Only consult the customer complaints section after a complete check using the diagnostic tool.

FAULTS DETECTED ON BRAKING WITH ABS/BRAKING REGULATION

- **Locking of one or more wheels.** — **ALP 2**
- **Pulling.** — **ALP 3**
- **Drift.** — **ALP 4**
- **Unexpected ABS operation at low speed with light pedal pressure.** — **ALP 5**
- **Unexpected ABS operation on poor road surfaces.** — **ALP 6**
- **Unexpected ABS operation with use of accessories (car phone, CB etc.).** — **ALP 7**
- **Extension of brake pedal travel following ABS regulation (with an irregular pedal when entering ABS regulation).** — **ALP 8**
- **Spongy pedal.** — **ALP 9**
- **Brake pedal vibration.** — **ALP 10**
- **Noises from the pump, the pipes or the hydraulic unit.** — **ALP 11**

OTHER CASES

- **No dialogue with the ABS computer.** — **ALP 1**
- **Brake lights do not light up go out (E1/C1 function code)** — **ALP 12**

GETtheMANUALS.org

ALP 1	No dialogue with the ABS computer

NOTES	None

Try to establish dialogue with a computer on another vehicle to make sure that the diagnostic tool is not faulty. If the tool is not causing the fault and dialogue cannot be established with any other computer on the same vehicle, it may be that a faulty computer is disrupting diagnostic line **K**.
Proceed by successive disconnections to locate this computer.
Check the voltage of the battery and perform the operations necessary to obtain a voltage which conforms to specification (**9.5 Volts** < battery voltage < **17.5 Volts**).

Check that the ABS fuses on the passenger compartment fuse board (**5A**) and two in the engine compartment (**30A and 40A**) are present and sound.
Check that the computer connector is properly connected and check the condition of its connections.
Check the ABS earths (good quality, not oxidised, sheath sealing ring (on the earth terminal), tightness of the earth bolt located above the ABS assembly).
Check that the supply to the computer is correct:

- **Earth on tracks 16 and 47** of the **47-track connector**
- **+ before ignition feed on tracks 1 and 32** of the **47-track** connector.
- **+ after ignition feed on track 4** of the **47-track** connector.

Check that the power supply to the diagnostic socket is correct:

- **+ Before ignition on track 16**.
- **+ after ignition on track 1**
- **Earth on track 5**.

Check the continuity and insulation of the connection between:

Computer connector **track 2** ⟶ **track 7** diagnostic socket.

Contact your Techline if dialogue has still not been established after these various checks.

AFTER REPAIR	Clear the computer memory. Carry out a road test followed by another check with the diagnostic tool.

GETtheMANUALS.org

ALP 2	Locking of one or more wheels

NOTES	Only consult this customer complaint after a complete check using the diagnostic tool.

Reminder: The wheels locking on a vehicle fitted with ABS, or the tyres grating, which feels like locking to the customer, may be linked to normal operation of the system and should not always be considered as a fault:
- Locking is allowed below **4 mph (6 km/h)** (system regulation will not be activated).
- Braking with ABS on very poor roads (significant squealing).

However, if the wheels are actually locking, lift the vehicle in order to be able to turn the wheels and check:

- Possible inversion when connecting the speed sensors.
  Using parameters **PR001, PR002, PR003 and PR004**, rotate the wheels slowly and check the consistency of the results obtained.
  If the value measured is zero, rotate the other wheels to confirm an electrical inversion of the sensors and repair the wiring harness.

- Possible inversion of pipes on the hydraulic unit.
  Use the Front left-hand wheel solenoid valves, Front right-hand wheel solenoid valves, Rear left-hand wheel solenoid valves and Rear right-hand wheel solenoid valves commands while depressing the brake pedal and check for the occurrence of ten locking/unlocking cycles on the relevant wheel (see the Help section). If the ten cycles do not occur on the wheel tested, (wheel remains locked), see if they occur on another wheel (if a bad connection is confirmed: repair).
  If the ten cycles do not occur on a wheel and the pipes are correctly connected, replace the hydraulic unit.

Check that the sensor casing is secured when rotating.
Check that the wheel speed sensors are correctly mounted (clipped).
Check the conformity of the targets: condition, **number of teeth = 48 (using the SC001 Check target teeth command)**.

If the fault is still present after these checks, replace the hydraulic unit.

AFTER REPAIR	Carry out a road test followed by a diagnostic tool check.

GETtheMANUALS.org

ALP 3	**Pull**

NOTES	Only consult this customer complaint after a complete check using the diagnostic tool.

Disconnect one wheel speed sensor.
Start the engine and ensure that only the ABS fault warning light comes on. Do not drive the vehicle if the brake fault warning light is also lit, as the brake limiter function is no longer ensured.
Carry out a road test with the ABS deactivated.

Is the fault still present under these conditions?

yes →

If the brake pedal travel is relatively long, bleed the brake circuit.
If the travel is normal, check the tyre pressures, the front axle, or for any leaks in the circuit.

no ↓

Raise the vehicle so that you can rotate the wheels and check:

– Possible inversion when connecting the speed sensors.
– Possible inversion of pipes on the hydraulic unit.
  To perform these tests, refer to and apply the procedures defined in **ALP 2**.
  Check the condition of the ABS targets and that they conform to specifications.
  Also check the sensor/target air gap by rotating each front and rear wheel one revolution.
  If the fault is still present replace the hydraulic unit.

AFTER REPAIR	Carry out a road test followed by a diagnostic tool check.

GETtheMANUALS.org

ALP 4	Drift

NOTES	Only consult this customer complaint after a complete check using the diagnostic tool.

Disconnect one wheel speed sensor.
Start the engine and ensure that only the ABS fault warning light comes on. Do not drive the vehicle if the brake fault warning light is also lit, as the brake limiter function is no longer ensured.
Carry out a road test with the ABS deactivated.

Is the fault still present under these conditions?

yes →

Road handling fault not connected with the ABS.
Check the condition of the brake linings and that they are to specification and check the tyre pressures, the front axle, etc.

no ↓

Normal behaviour linked to the system operation during the regulation phase, mainly on surfaces with uneven grip or which are poorly laid.

AFTER REPAIR	Carry out a road test followed by a diagnostic tool check.

GETtheMANUALS.org

ALP 5	**Unexpected ABS operation at low speed and with slight pedal pressure**

NOTES	Only consult this customer complaint after a complete check using the diagnostic tool. Warning: ABS regulation may be unresponsive when vehicle is driven on surfaces such as icy roads, cobbled streets, etc.

Brake pedal vibrations may be felt which are connected to the system behaviour in particular situations:
- Crossing speed bumps.
- Tight cornering with lifting of the inside rear wheel.

These vibrations may be linked to simple brake limiter activation, when the pressure on the rear axle is limited.

If the fault relates to something else, check the speed sensor connectors (micro-breaks) as well as the targets.

AFTER REPAIR	Carry out a road test followed by a diagnostic tool check.

GETtheMANUALS.org

ALP 6	**Unexpected ABS system intervention on a poor road surface**

NOTES	Only consult this customer complaint after a complete check using the diagnostic tool.

On poor road surfaces it is normal to feel bucking and vibration of the pedal as well as more significant tyre squealing than on good surfaces.
This gives the impression of a variation in efficiency, but this should be considered normal.

AFTER REPAIR	Carry out a road test followed by a diagnostic tool check.

GETtheMANUALS.org

ALP 7	**Unexpected ABS operation when use special features used (car phone, CB, etc.)**

NOTES	Only consult this customer complaint after a complete check using the diagnostic tool.

Check that the equipment which is causing the fault is approved.
Check that the equipment has been correctly installed with no alteration to the original wiring, in particular that of the ABS (unauthorised connections to earth and **+ after ignition feed/before ignition feed** of the ABS).

AFTER REPAIR	Carry out a road test followed by a diagnostic tool check.

GETtheMANUALS.org

ALP 8	**Lengthening of the brake pedal travel following a regulation phase** (with an irregular pedal when entering the regulation phase)

NOTES	Only consult this customer complaint after a complete check using the diagnostic tool.

Air transit from the hydraulic unit regulation channels to the brake circuits.
Bleed the circuits in accordance with the procedure recommended in the Workshop Repair Manual (use the command modes on the diagnostic tool).
Following the operation, carry out a road test with ABS regulation.

If the fault is still present, perform the above operation once or twice more.
If the customer complaint is particularly serious, and bleeding the circuit does not improve matters, replace the hydraulic unit.

AFTER REPAIR	Carry out a road test followed by a diagnostic tool check.

GETtheMANUALS.org

ALP 9	**Spongy pedal**

NOTES	Only consult this customer complaint after a complete check using the diagnostic tool.

Air in the brake circuits.
Bleed the circuits in the conventional way starting with the rear right-hand brake, followed by rear left, front left and finally front right. **Repeat the operation if necessary.**

AFTER REPAIR	Carry out a road test followed by a diagnostic tool check.

GETtheMANUALS.org

ALP 10	**Brake pedal vibration**

NOTES	Only consult this customer complaint after a complete check using the diagnostic tool.

Normal reaction of the brake pedal during an **ABS** operation or of limitation of pressure on the rear axle (brake compensator function).

AFTER REPAIR	Carry out a road test followed by a diagnostic tool check.

GETtheMANUALS.org

ALP 11	**Noise from the pump, pipes or hydraulic unit**

NOTES	Only consult this customer complaint after a complete check using the diagnostic tool.

– Vibration of the unit: Check that the unit support insulating rubber mounting bushes are in place and in good condition.
– Vibration of the pipes: check that all of the pipes are correctly engaged in their securing clips and that there is no contact between the pipes or between the pipes and the body.

The "Front left-hand wheel solenoid valves", "Front right-hand wheel solenoid valves", "Rear left-hand wheel solenoid valves" and "Rear right-hand wheel solenoid valves" actuating commands may be used while depressing the brake pedal to determine where the noise is coming from.

AFTER REPAIR	Carry out a road test followed by a diagnostic tool check.

GETtheMANUALS.org

ALP 12	**Brake lights will not light up or go out.**

NOTES	Only consult this customer complaint after a complete check using the diagnostic tool.

Using the diagnostic tool, check that **ET017** is functioning correctly.
If not, apply the fault finding procedure described above for **ET017**.

Using the diagnostic tool, check that the **FUNCTION CODE NUMBER** (CLIP: identification screen and NXR: parameter screen **PR041**) is **E1 or C1**.

– Check that the earths are present on the rear lights.
– Check that there is continuity on the relay mounting (relay fitted) between tracks **C3 and C4**.

If the continuity is incorrect, replace the lights out relay.

If the brake lights still do not light up under **+ after ignition feed**.

Check the insulation in relation to the earth of the connection between **track 13** of the computer connector and **track C2** of the brake light cut-off relay.

if the fault is still present, check the continuity between **tracks A3** of the brake light connector and the **rear lights connector**.

AFTER REPAIR	Carry out a road test followed by a diagnostic tool check.

GETtheMANUALS.org

VEL SATIS

6 Air conditioning

61B SELF-CONTAINED HEATER

ABBREVIATIONS	61B - 2
Fault finding - Introduction	61B - 3
Fault finding - Fault Interpretation	61B - 4
Fault finding - Conformity check	61B - 18
Fault finding - Command interpretation	61B - 20
Fault finding - Status interpretation	61B - 21
Fault finding - Parameter interpretation	61B - 24
Fault finding - Customer complaints	61B - 25
Fault finding - Fault Finding Chart	61B - 26

V2 **Edition Anglaise**

"The repair procedures given by the manufacturer in this document are based on the technical specifications current when it was prepared.

The procedures may be modified as a result of changes introduced by the manufacturer in the production of the various component units and accessories from which his vehicles are constructed."

All rights reserved by Renault s.a.s.

Copying or translating, in part or in full, of this document or use of the service part reference numbering system is forbidden without the prior written authority of Renault s.a.s.

© Renault s.a.s. 2007

SELF-CONTAINED HEATER
ABBREVIATIONS

GETtheMANUALS.org

ABBREVIATIONS	MEANING OF ABBREVIATION
ABS	Anti-lock braking system
ALP	Fault Finding Chart
APC	After ignition
AVC	Before ignition feed
BVA	Automatic gearbox
BVM	Manual gearbox
BVR	Sequential gearbox
CAN	Controller Area Network
AC	Air conditioning
CD	Compact disc
PAS	Power assisted steering (hydraulic)
DAE	Electric power assisted steering
DVD	Digital versatile disc
DTC	Fault finding code
EGR	Exhaust gas recirculation
ESP	Electronic Stability Program
GMV	Fan assembly
CNG	Compressed natural gas
LPG	Liquefied petroleum gas
HLE	High yield strength
MAG	Metal active gas (for welding steel)
MIG	Metal inert gas (for welding aluminium)
MR	Workshop repair manual
TN	Technical Note
OBD	On board diagnostics
SER	Resistance spot welding
SSPP	Tyre pressure monitoring system
THLE	Very high-tensile strength
TM	Labour time
UCH	UCH
UPC	Protection and switching unit
UCT	Roof control unit
UHLE	Ultra high yield strength
VIN	Vehicle identification number

GETtheMANUALS.org

This document explains the generic fault finding procedure for the additional heater function on VEL SATIS phase 1 and 2 vehicles, with diesel engines.
A "Fault Finding Special Features" Technical Note is available for each vehicle fitted with this computer/ function. It covers all the fault finding special features in this document for the vehicle concerned. This Special notes Note complements or replaces the information provided in the Generic fault finding document.

To carry out fault finding on this system, it is essential to have the following items:

- the Workshop Repair Manual for the vehicle concerned,
- the wiring diagram of the function for the vehicle concerned,
- the tools listed in Special tooling required.

GENERAL APPROACH TO FAULT FINDING

- Use one of the diagnostic tools to identify the system fitted to the vehicle (to read the computer group, the program number, the Vdiag, etc.).

- Search for fault finding documents corresponding to the system identified.

- Take note of information contained in the introductory sections.

- Read the faults stored in the computer memory and use the Interpretation of Faults section of the documents.

  REMINDER: each fault is interpreted for a given type of storage (fault present, fault stored, fault present or stored). The checks defined for dealing with each fault are therefore only to be performed on the vehicle if the fault declared by the diagnostic tool is interpreted in the document for its type of storage. The storage type should be considered when using the diagnostic tool after the ignition has been switched off and switched back on.
  If a fault is interpreted when it is declared as stored, the conditions for applying fault finding appear in the Notes box. If the conditions are not met, use the fault finding procedure to check the circuit of the component concerned, since the fault is no longer present on the vehicle. Carry out the same procedure when a fault is declared as stored by the diagnostic tool but is only interpreted in the documentation as a present fault.

- Carry out the conformity check (appearance of possible faults not yet identified by the system's self-test procedure) and implement the associated fault finding procedures according to the results.

- Confirm the repair (customer complaint disappears).

- Use the fault finding procedure for each Customer complaint if the fault persists.

SPECIAL TOOLING REQUIRED:

- diagnostic tool (except XR25),
- multimeter.

GETtheMANUALS.org

DF001 present or stored	PRE-HEATER PLUG CC.0 : Short circuit to earth CO : Open circuit

NOTES	It is a condition of application of the diagnostic to the stored fault that only one fault can be declared present at a time. **The fault is declared present after ignition of the spark plug and with no other fault declared present.**

Remove the blower cover and disconnect connector B2 from the control unit.
Check the condition of the connector and replace it if necessary.

Check the **insulation, continuity and absence of interference resistance of the connectors:**

connector B2 **track 9** → **+** Spark plug
connector B2 **track 12** → **earth** spark plug

Repair if necessary.

If the fault persists, change the spark plug.

AFTER REPAIR	Apply the reference value to confirm that the repair is successful. Deal with any other possible faults. Clear the stored faults and check that no other fault appears.

GETtheMANUALS.org

DF002 present or stored	FUEL METERING PUMP CC.0 : Short circuit to earth CO : Open circuit

NOTES	It is a condition of application of the diagnostic to the stored fault that only one fault can be declared present at a time. **The fault is declared present after the metering pump has been switched on and with no other fault declared present.**

Check the condition of the 8-track connector and replace it if necessary.
Check the **insulation, continuity and absence of interference resistance of the connectors:** 8-track connector **track 4** → **track 2** connector **ST2** metering pump 8-track connector **track 2** → **track 1** connector **ST2** metering pump Repair if necessary.
Measure the resistance at the meter pump terminals.If it is not approximately **10 ohms** replace the meter pump.
Replace the metering pump if the fault persists.

AFTER REPAIR	Apply the reference value to confirm that the repair is successful. Deal with any other possible faults. Clear the stored faults and check that no other fault appears.

GETtheMANUALS.org

DF003 present or stored	COOLANT TEMPERATURE SENSOR CIRCUIT CC.0 : Short circuit to earth CO : Open circuit

NOTES	It is a condition of application of the diagnostic to the stored fault that only one fault can be declared present at a time. **The fault is declared present after the boiler has been ignited and with no other fault declared present.**

Remove the blower cover and disconnect connector B2 from the control unit. Check the condition of the connector and replace it if necessary.
Check the **insulation, continuity and absence of interference resistance of the connectors:** connector B2 **track 3** ⟶ temperature sensor connector B2 **track 4** ⟶ temperature sensor Repair if necessary.
Measure the resistance at the sensor terminals.If it is not **12 KΩ ± 5% at 20°C** replace the internal wiring of the boiler
Replace the boiler if the fault persists.

AFTER REPAIR	Apply the reference value to confirm that the repair is successful. Deal with any other possible faults. Clear the stored faults and check that no other fault appears.

GETtheMANUALS.org

DF004 present or stored	COMBUSTION AIR FAN CC.0 : Short circuit to earth CO : Open circuit DEF : Blocked

NOTES	It is a condition of application of the diagnostic to the stored fault that only one fault can be declared as present at a time. **The fault is declared present after the boiler has been ignited and with no other fault declared present.**

Remove the blower cover and disconnect connector B2 from the control unit.
Check the condition of the connector and replace it if necessary.

Check the **insulation, continuity and absence of interference resistance of the connectors:**

connector B2 **track 14** → **earth** combustion air fan
connector B2 **track 13** → **+** combustion air fan

Repair if necessary.

Using a multimeter, check that the coil of the fan has not been cut.

Replace the boiler if necessary.

AFTER REPAIR	Apply the reference value to confirm that the repair is successful. Deal with any other possible faults. Delete the stored faults and check that no other fault appears.

GETtheMANUALS.org

DF005 present or stored	OVERHEATING SWITCH CC.0 : Short circuit to earth CO : Open circuit

NOTES	It is a condition of application of the diagnostic to the stored fault that only one fault can be declared as present at a time. **The fault is declared present after the boiler has been ignited and with no other fault declared present.**

Remove the blower cover and disconnect connector B2 from the control unit.
Check the condition of the connector and replace it if necessary.

Check the **insulation, continuity and absence of interference resistance of the connectors:**

connector B2 **track 6** ⟶ overheating switch
connector B2 **track 5** ⟶ overheating switch

Repair if necessary.

Measure the resistance at switch terminals.If it is not **12 KΩ ± 5 % at 20°C** replace the internal wiring of the boiler (the overheating switch is connected to the internal wiring).

Replace the boiler if the fault persists.

AFTER REPAIR	Apply the reference value to confirm that the repair is successful. Deal with any other possible faults. Clear the stored faults and check that no other fault appears.

GETtheMANUALS.org

DF006 present or stored	FLAME DETECTOR CC.0 : Short circuit to earth CO : Open circuit

NOTES	It is a condition of application of the diagnostic to the stored fault that only one fault can be declared present at a time. **The fault is declared present after the boiler has been ignited and with no other fault declared present.**

Remove the blower cover and disconnect connector B2 from the control unit.
Check the condition of the connector and replace it if necessary.

Check the **insulation, continuity and absence of interference resistance of the connectors:**

connector B2 **track 1** → flame detector
connector B2 **track 2** → flame detector

Repair if necessary.

Measure the resistance at the flame detector terminals. If it is not **1200 KΩ ± 5% at 50°C** replace the internal wiring (the flame detector is connected to the internal wiring).

Replace the **boiler** if the fault persists.

AFTER REPAIR	Apply the reference value to confirm that the repair is successful. Deal with any other possible faults. Delete the stored faults and check that no other fault appears.

GETtheMANUALS.org

DF008 present or stored	BOILER MALFUNCTION 1.DEF : Excess voltage 2.DEF : Not enough voltage

NOTES	It is a condition of application of the diagnostic to the stored fault that only one fault can be declared present at a time. **The fault is declared present after the boiler has been ignited and with no other fault declared present.**

Check the voltage between **tracks 1and 2** of the 8-track connector. This should be between: **10.2 V < X < 16 V.**

Check the **insulation, continuity and absence of interference resistance of the connectors:**

8-track connector **track 1** ⟶ **+ battery**
8-track connector **track 2** ⟶ **battery earth**

Repair if necessary.

Check the battery and charge circuit if the problem persists.

AFTER REPAIR	Apply the reference value to confirm that the repair is successful. Deal with any other possible faults. Clear the stored faults and check that no other fault appears.

GETtheMANUALS.org

DF010 present or stored	EXCEEDING START UP TIME 1.DEF

NOTES	It is a condition of application of the diagnostic to the stored fault that only one fault can be declared as present at a time. **The fault is declared present if two unsucessful attempts have been made to ignite the boiler in 180 seconds and no other fault is declared present.**

Check the **air inlet and exhaust ducts.** Repair if necessary.
Check the **diesel supply pipes for bubbles.** Check the condition of the metering pump filter Repair if necessary.
Measure the resistance at the filter pump terminals.If it is not **10 Ω ± 5%** replace the metering pump.
Check the condition of the **spark plug.** Replace if necessary.
Replace the **boiler** if the fault persists.

AFTER REPAIR	Apply the reference value to confirm that the repair is successful. Deal with any other possible faults. Delete the stored faults and check that no other fault appears.

GETtheMANUALS.org

DF011 present or stored	EXCEEDING THE COOLING FAN TIME 1.DEF : if flame detector **> 70°C** the engine cooling fan is activated for **four minutes**

NOTES	It is a condition of application of the diagnostic to the stored fault that only one fault can be declared present at a time. **The fault is declared present after the boiler has been ignited and with no other fault declared present.**

Check the exhaust gas and the combustion air ducts. Repair if necessary.
Remove the blower cover and disconnect connector B2 from the control unit. Check the condition of the connector and replace it if necessary.
Check the **insulation, continuity and absence of interference resistance of the connectors:** connector B2 **track 1** → flame detector connector B2 **track 2** → flame detector Repair if necessary.
Measure the resistance at the flame detector terminals.If it is not **1200 K Ω ± 5% at 50°C** replace the internal wiring of the boiler (the overheating switch is connected to the wiring).
Replace the **boiler** if the fault persists.

AFTER REPAIR	Apply the reference value to confirm that the repair is successful. Deal with any other possible faults. Delete the stored faults and check that no other fault appears.

GETtheMANUALS.org

DF012 present or stored	CONTROL UNIT 1.DEF: Unidentified electrical fault

NOTES	It is a condition of application of the diagnostic to the stored fault that only one fault can be declared as present at a time. **The fault is declared present after the boiler has been ignited and with no other fault declared present.**

Replace the **control unit**.

AFTER REPAIR	Apply the reference value to confirm that the repair is successful. Deal with any other possible faults. Delete the stored faults and check that no other fault appears.

GETtheMANUALS.org

DF013 DF014 DF015 present or stored	MINIMUM FLAME EXTINGUISHER OUTPUT AVERAGE FLAME EXTINCTION OUTPUT MAXIMUM FLAME EXTINGUISHER OUTPUT DEF : Unidentified electrical fault

NOTES	It is a condition of application of the diagnostic to the stored fault that only one fault can be declared present at a time. **The fault is declared present after the boiler has been ignited and with no other fault declared present.**

Check the exhaust gas duct and the combustion air duct. Repair if necessary.
Check the diesel supply pipes to the boiler for air bubbles. Repair if necessary.
Check the condition of connector B2 in the control unit and replace it if necessary.
Check the **insulation, continuity and absence of interference resistance of the connectors:** connector B2 **track 9** → **+** Spark plug connector B2 **track 12** → **earth** spark plug Repair if necessary.
If the fault persists, change the **spark plug.**

AFTER REPAIR	Apply the reference value to confirm that the repair is successful. Deal with any other possible faults. Delete the stored faults and check that no other fault appears.

GETtheMANUALS.org

DF016 DF017 DF018 present or stored	DETECTION OF OVERHEATING: LOW PROBABILITY DETECTION OF OVERHEATING: PROBABLE DETECTION OF OVERHEATING: CONFIRMED DEF : Unidentified electrical fault

NOTES	It is a condition of application of the diagnostic to the stored fault that only one fault can be declared as present at a time. **The fault is declared present after the boiler has been ignited and with no other fault declared present.**
	Special notes **probability:** temperature difference of **15˚C between the sensor and the overheating switch** **confirmed:** temperature at the sensor or switch **> 125˚C** **low probability:** material temperature threshold exceeded, sensor or switch **> 130˚C.**

Check the circulation of water through the system.
Check that it has been degassed.

Remove the blower cover and disconnect connector B2 from the control unit.
Check the condition of the connector and replace it if necessary.

Check the **insulation, continuity and absence of interference resistance of the connectors:**

- connector B2 **track 3** → temperature sensor
- connector B2 **track 4** → temperature sensor
- connector B2 **track 5** → overheating switch
- connector B2 **track 6** → overheating switch

Repair if necessary.

Measure the resistance at the sensor terminals. If it is not **12 KΩ ± 5% at 20˚C** replace the internal wiring of the boiler
Measure the resistance at switch terminal. If it is not **12 KΩ ± 5% at 20˚C** replace the internal wiring of the boiler

Replace the **boiler if the fault persists.**

AFTER REPAIR	Apply the reference value to confirm that the repair is successful. Deal with any other possible faults. Clear the stored faults and check that no other fault appears.

GETtheMANUALS.org

DF019 present or stored	BLOCK: TOO MANY CONSECUTIVE START UP ATTEMPTS DEF : Unidentified electrical fault

NOTES	Priority in dealing with a number of faults: If more than one of the faults **DF019** and **DF001, DF002** are stored, treat as a priority faults **DF001 pre-heater plug and DF002 metering pump.** It is a condition of application of the diagnostic to the stored fault that only one fault can be declared as present at a time. **The fault is declared present following ten failed attempts to start the boiler and with no other faults declared present**

Clear **bad start up counter** using the delete commandl **RZ002.**

AFTER REPAIR	Apply the reference value to confirm that the repair is successful. Deal with any other possible faults. Delete the stored faults and check that no other fault appears.

GETtheMANUALS.org

DF020 present or stored	BLOCK: SUCCESSIVE OVERHEATING DEF : Unidentified electrical fault

NOTES	It is a condition of application of the diagnostic to the stored fault that only one fault can be declared present at a time. **The fault is declared present after the boiler overheats ten times in succession and with no other fault declared present.**

Delete **overheating meter** using the clear control **RZ001.**

AFTER REPAIR	Apply the reference value to confirm that the repair is successful. Deal with any other possible faults. Clear the stored faults and check that no other fault appears.

SELF-CONTAINED HEATER
Fault finding - Conformity check

GETtheMANUALS.org

NOTES	Only check the conformity after performing a **complete check** with the diagnostic tool. The values indicated in this conformity check are given as examples. Condition for performing check: **engine temperature below 81°C and external temperature below 5°C**

Order	Function	Parameter or state Check or action	Display and notes	Fault finding
1	+ After ignition present	**ET001:** + After ignition present	**YES**	If there is a problem refer to fault finding state **ET001.**
2	Engine running	**ET007:** Engine running	**YES** **NO** if check **AC002** is activated, light boiler	If there is a problem refer to fault finding state **ET007.**
3	Boiler ventilation	**ET002:** Combustion air ventilation fan	**IGNITE**	**In the event of a problem,** perform the **fault finding procedure** for the combustion air fan **DF004**
		PR014: Engine cooling fan voltage	**0 to 7 volts**	
4	Flame detected	**ET003:** Flame detected	**YES**	**In the event of a problem,** perform the **fault finding procedure** for the flame detector **DF006**
5	System blocked	**ET004:** System blocked	**NO**	**In the event of a problem,** perform the **fault finding procedure** for block due to too many consecutive starts **DF019 and** block due to successive overheating **DF020**
6	Boiler output	**ET005:** Boiler output	**MIN OR AVERAGE**	In the event of a problem, refer to the fault finding procedure for state **ET005**.

SELF-CONTAINED HEATER
Fault finding - Conformity check

GETtheMANUALS.org

NOTES	Only check the conformity after performing a **complete check** with the diagnostic tool. The values indicated in this conformity check are given as examples. Condition for performing check: **engine temperature below 81˚C and external temperature below 5˚C**

Order	Function	Parameter or state Check or action	Display and notes	Fault finding
7	Overheating switch	**PR008:** Overheating switch value measured	**Overheating if temperature is above 125˚C**	**If there is a problem,** perform the **fault finding procedure** on the overheating switch **DF005.**
8	Coolant temperature sensor	**PR010:** Coolant temperature sensor value measured	**X = engine temperature ± 5ºC**	**If there is a problem,** perform the fault finding procedure on the coolant temperature sensor circuit. **DF003.**
9	Flame detector	**PR013:** Flame detector value measured	**X = boiler temperature ± 20˚C**	**If there is a problem,** perform the **fault finding procedure** on the flame detector DF006.
10	Computer supply voltage	**PR108:** Computer supply voltage	**10.2 V < X < 16 V**	If there is a problem check the fault finding of parameter **PR108**
11	Spark plug feed instruction	**PR016:** Spark plug feed instruction	**None.**	**If there is a problem,** perform the **fault finding procedure DF001 on the faulty pre-heater plug.**
12	Fuel pump control frequency	**PR017:** Fuel pump control frequency	**X = frequency in Hertz ± 5%**	**If there is a problem,** perform the **fault finding procedure** on the fuel metering pump **DF002.**

GETtheMANUALS.org

AC002 AC003	BOILER CONTROL AC002 : Ignite the boiler AC003 : Extinguish the boiler

NOTES	**Important : During boiler control, it is essential that the engine is running to avoid any overheating due to non-circulation of water.**

The command menu on the diagnostic tool can be used to stop or start the boiler.If it fails to start check the following:

– there is fuel in the tank,
– the fuses are intact
– the combustion air inlet and outlet ducts are not blocked.

Repair if necessary.

Check **the connection and the condition of the intermediary 5-track connector** between the vehicle wiring and the boiler and replace if necessary.

Check the **insulation, continuity and absence of interference resistance** of the connections between:

+ battery	→	**Track A** 5 track connector
Earth	→	**Track D** 5 track connector
+12V After contact	→	**Track E** 5-track connector
HK7 diagnostic socket	→	**Track B** 5 track connector

Repair if necessary.

Replace the **boiler if the fault persists.**

GETtheMANUALS.org

ET001	+APC PRESENT

NOTES	None.

If the state **INACTIVE is displayed** check that the battery charge is above **10.2 volts,** otherwise repair the vehicle charge circuit.

Check **the connection of the intermediary 5 track connector** between the vehicle wiring and the boiler and replace if necessary.

Check **the connection and condition of the intermediary 8-track connector located on the boiler mounting.**

Check the **insulation, continuity and absence of interference resistance** of the connections between:

+ battery → **Track 1** 8 track connector
Earth → **Track 2** 8 track connector
+12 V After connector → **Track 7** 8 track connector

Repair if necessary.

Replace the boiler **control unit** if the problem persists.

GETtheMANUALS.org

ET005	BOILER OUTPUT

NOTES	None

OFF	State normal **if engine** off. The state of the boiler is **OFF** if the external air temperature is **above 5˚C.** The boiler is also **OFF** when the engine temperature is above **82˚C.**

MIN	The state of the boiler is **MINIMUM OUTPUT** when the engine temperature is between **77˚C and 82˚C and is increasing, and** the external air temperature is below **5˚C.** The state of the boiler is **MINIMUM OUTPUT** when the engine temperature is between **82˚C and 73˚C and is decreasing, and** the external air temperature is below **5˚C.**

AVERAGE	The state of the boiler is **AVERAGE OUTPUT** when the outside air temperature is below **5˚C** and the coolant temperature is below **73˚C**. It will function at this level of output until the coolant temperature reaches **77˚C.**

GETtheMANUALS.org

ET007	ENGINE RUNNING

NOTES	None.

Check **the connection and condition of the connector** on the alternator and the vehicle charge circuit. Repair if necessary.
Check the **insulation, the continuity and absence of interference resistance** on the connection between: **Alternator track L** ⟶ **Track C** 5 track connector Repair if necessary.
Check the **insulation, continuity and absence of interference resistance** of the connections between: **Track C** ST1 5 track connector ⟶ **Track 1** ST3 bimetallic strip connector **Track 2** ST3 bimetallic strip connector ⟶ **Track 6** 8 track connector Repair if necessary. If the continuity is poor between **tracks 1 and 2 of the ST3 connector,** replace **the bimetallic strip with a schunt** and test the continuity between **tracks 1 and 2.** Replace the bimetallic strip if necessary.
Replace the **boiler control unit** if the problem persists.

GETtheMANUALS.org

PR108	COMPUTER SUPPLY VOLTAGE

NOTES	None.

Check **the connection of the intermediary 5-track connector** between the vehicle wiring and the boiler and replace if necessary.

Check the **insulation, continuity and absence of interference resistance** of the connections between:

+ Battery	→	**Track A** 5-track connector
Earth	→	**Track D** 5-track connector
+12V After ignition	→	**Track E** 5-track connector

Repair if necessary.

Check the **insulation, continuity and absence of interference resistance** of the connections between:

Track A 5 track connector	→	**Track 1** 8 track connector
Track D 5-track connector	→	**Track 2** 8-track connector
Track E 5 track connector	→	**Track 7** 8 track connector

Repair if necessary.

Replace the **boiler control unit** if the problem persists.

GETtheMANUALS.org

NO DIALOGUE WITH THE COMPUTER	**CHART 1**
NO HEATING OR INADEQUATE HEATING	**CHART 2**

GETtheMANUALS.org

ALP 1	No dialogue with the computer

NOTES	None.

Try the diagnostic tool on another vehicle.

Check:
– the connection between the diagnostic tool and the diagnostic socket (lead in good condition),
– the engine fuses.

Check for the presence of **+ 12 volts before ignition feed** on **track 16**, **+ 12 volts after ignition feed** on **track 1** and an **earth** on **tracks 4 and 5** of the diagnostic socket.

Repair if necessary.

Check **the insulation, continuity and the absence of interference resistance** on the connections between:

connector **ST1 track A**	→	**V battery** (fuse box)
connector **ST1 track E**	→	**+ after ignition feed** (fuse box)
connector **ST1 track D**	→	**earth**
connector **ST1 track B**	→	**track 7** of the diagnostic socket (line K)

Repair if necessary.

AFTER REPAIR	Check that the system is operating correctly.

GETtheMANUALS.org

ALP 2	No heating or inadequate heating

NOTES	Only check the customer complaint after performing a **complete check** with the **diagnostic tool**.

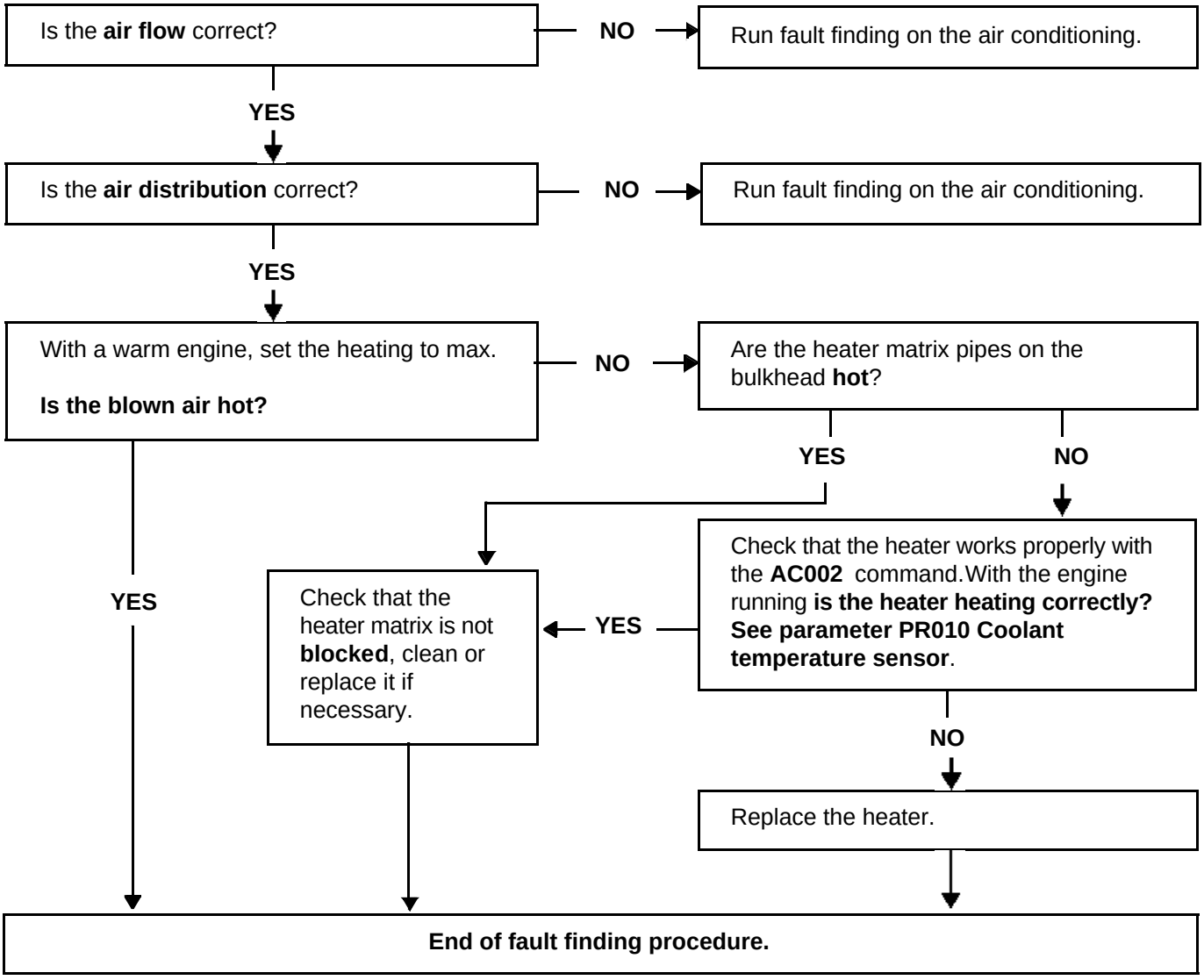

AFTER REPAIR	Check that the system is operating correctly.

independent heating 1.0

GETtheMANUALS.org

VEL SATIS

6 Air conditioning

62B CLIMATE CONTROL

Vdiag No.: 05

Fault finding - Introduction	62B - 2
Fault finding - Interpretation of faults	62B - 3
Fault finding - Help	62B - 26
Fault finding - Conformity check	62B - 30
Fault finding - Interpretation of statuses	62B - 42
Fault finding - Interpretation of parameters	62B - 48
Fault finding - Customer complaints	62B - 52
Fault finding - Fault Finding Chart	62B - 54

V4 **Edition Anglaise**

"The repair procedures given by the manufacturer in this document are based on the technical specifications current when it was prepared.

The procedures may be modified as a result of changes introduced by the manufacturer in the production of the various component units and accessories from which his vehicles are constructed."

All rights reserved by Renault s.a.s.

Copying or translating, in part or in full, of this document or use of the service part reference numbering system is forbidden without the prior written authority of Renault s.a.s.

© Renault s.a.s. 2008

GETtheMANUALS.org

This document contains the special fault finding procedures applicable to all climate control computers fitted on Vel Satis vehicles.

In order to carry out fault finding on this system, it is essential to have the following items available:

- **This section of the MR,**
- **The wiring diagram of the function for the vehicle concerned,**
- **The test bornier Elé. 1619, a multimeter and the CLIP diagnostic tool.**

GENERAL APPROACH TO FAULT FINDING

- Use of one of the diagnostic tools to identify the system fitted on the vehicle (to read the computer family, the program number, the Vdiag, etc.).
- Search for fault finding documents corresponding to the system identified.
- Use of information contained in the introductory sections.

DESCRIPTION OF THE FAULT FINDING PHASES

1 - FAULT CHECKING

It is essential to start with this stage before any work is carried out on the vehicle.

- Read the faults stored in the computer memory and use the Interpretation of faults section of the documents.

Reminder: Each fault is interpreted for a particular type of storage (present fault, stored fault, present or stored fault). The checks defined for dealing with each fault are therefore only to be performed on the vehicle if the fault declared by the diagnostic tool is interpreted in the document for its type of storage. The way in which the fault is stored should be considered when using the diagnostic tool after the ignition has been switched off and on again. If a fault is interpreted when it is declared as stored, the conditions for applying fault finding appear in the Notes box. If the conditions are not met, use the fault finding procedure to check the circuit of the faulty component, since the fault is no longer present on the vehicle. Carry out the same procedure when a fault is declared as stored by the diagnostic tool but is only interpreted in the documentation as a present fault.

2 - CONFORMITY CHECK

The aim of the conformity check is to check data that does not produce a fault on the diagnostic tool because the data is inconsistent. Therefore, this stage is used to:
- perform fault finding on faults that do not have a fault display, and which may correspond to a customer complaint.
- check the reliability of the air conditioning system and ensures that a fault will not reappear after repair.

This section gives the fault finding procedures for statuses and parameters and the conditions for checking them. If a status is not behaving normally or a parameter is outside the permitted tolerance values, consult the corresponding fault finding page.

3 - PROCESSING THE CUSTOMER COMPLAINT

If the test with the diagnostic tool is OK but the customer complaint is still present, the fault should be dealt with by Customer complaints.
This section has fault finding charts (ALPs), which suggest a series of possible causes for the fault. Only use these charts in the following cases:
- no faults appear on the diagnostic tool,
- no faults are detected during the conformity check,
- the vehicle is not operating correctly.

GETtheMANUALS.org

DF001 PRESENT	COMPUTER

NOTES	**Special notes:** the climate control computer is supplied by the UCH.

Check the condition of the fuses.
Repair if necessary.

Check **the connection and condition** of the climate control control panel connectors.
Repair if necessary.

Check the supply of the climate control computer on **track 6** after ignition and **track 18** before ignition of connector A.
If there is no power supply, check the UCH.

Connect the bornier in place of the computer and check **the insulation, continuity and the absence of interference resistance** of the following connections:

- computer connector A **track 1** → **earth**
- computer connector A **track 16** → **earth**
- computer connector A **track 30** → **earth**
- computer connector A **track 6** → **UCH (see vehicle diagrams)**
- computer connector A **track 18** → **UCH (see vehicle diagrams)**

Repair if necessary.

If the fault is still present, **replace the climate control control panel** (computer).
(before replacing the computer, make a note of the configurations needed to re-program the new computer)

AFTER REPAIR	Reconfigure the computer (see the **help** section). Clear the fault memory. Deal with any other faults.

GETtheMANUALS.org

DF002 PRESENT	REFRIGERANT PRESSURE SENSOR CIRCUIT CO : open circuit CC : short circuit

NOTES	**Special notes:** The air conditioning compressor disengages if the condenser outlet pressure is below **2 bar** or above **27 bar** (relative). **Priority when dealing with a number of faults:** Deal with fault: **DF033 Refrigerant Charge** first, if it is present or stored.

Check **the connection and condition** of the refrigerant pressure sensor connector.
Replace the connector if necessary.

Connect the bornier to check the insulation, **continuity and the absence of interference resistance** on the following connections:

- computer connector A **track 8** → **track A** of the pressure sensor
- computer connector A **track 11** → **track B** of the pressure sensor
- computer connector A **track 3** → **track C** of the pressure sensor

Repair if necessary.

With the ignition switched on, check that the sensor is correctly supplied by the computer by measuring between: **track A** and **track B** of the sensor.
If there is no **5 V**, replace the climate control computer.

If the fault is still present, **replace** the pressure sensor.

AFTER REPAIR	Clear the fault memory. Deal with any other faults.

GETtheMANUALS.org

DF005 PRESENT OR STORED	HEATED REAR SCREEN RELAY CONTROL CIRCUIT CO : open circuit CC : short circuit

NOTES	**Conditions for applying the fault finding procedure to stored faults:** The fault is declared present after: – an attempt to activate the rear screen heating due to a short circuit to 12 volts. – the heated rear screen is inactive due to a short circuit at the earth or an open circuit.

Check for the **presence** of the heated rear screen relay.
Check **the condition of the clips** on the heated rear screen relay, located on the relay plate. Replace the clips if necessary.
With the ignition on, check **for + 12 volts** on **track 1**of the relay.
Connect the bornier in place of the computer and check **the insulation, continuity and the absence of interference resistance** of the connection: computer connector A **track 12** ⟶ **track 2** of the heated rear screen relay Repair if necessary.
Measure **the resistance** of the relay between: **track 1** and **track 2** of the heated rear screen relay and replace the relay if the resistance is not approximately: **60 Ω** at **20°C**.

AFTER REPAIR	Follow the instructions to confirm repair. Clear the fault memory. Deal with any other faults.

GETtheMANUALS.org

DF006 PRESENT OR STORED	HEATED WINDSCREEN RELAY CONTROL CIRCUIT CO : open circuit CC : short circuit

NOTES	Only to be taken into account if the vehicle is fitted with a heated windscreen (**LC005: Heated windscreen** should be **with**, if necessary carry out reconfigurations **CF050 Heated windscreen**). **Conditions for applying the fault finding procedure to stored faults:** The fault is declared present after: – an attempt to activate the electric windscreen due to a short circuit at 12 volts. – electric windscreen inactive due to a short circuit at the earth or an open circuit.

Check for the **presence** of the heated windscreen relay.
Check **the condition of the clips** on the heated windscreen relay, located on the relay plate. Replace the clips if necessary.
With the ignition on, check **for + 12 volts** on **track 1**of the relay.
Connect the bornier in place of the computer and check **the insulation, continuity and the absence of interference resistance** of the connection: computer connector A **track 4** ⟶ **track 2** of the heated windscreen relay Repair if necessary.
Measure **the resistance** of the relay between: **track 1** and **track 2** of the heated windscreen relay and replace the relay if the resistance is not approximately: **90 Ω** at **20°C**.

AFTER REPAIR	Follow the instructions to confirm repair. Clear the fault memory. Deal with any other faults.

GETtheMANUALS.org

DF007 PRESENT	INTERIOR TEMPERATURE SENSOR CIRCUIT CO : open circuit CC : short circuit

NOTES	**Special notes:** The interior temperature sensor is attached to a printed circuit with the humidity sensor. This component is located in the fixed casing below the interior rear-view mirror.

Check **the connection and condition** of the internal temperature sensor connector.
Replace the connector if necessary.

With the ignition on, check that the temperature sensor fan **is operating correctly**.
If not, check for **+ 12 volts** on **track 1** of the temperature sensor connector and an **earth** on **track 3**.
If the fan supply is correct and the fault is still present, replace the **sensors/fan** (the fan is not available separately).

Connect the bornier in place of the computer and check **the insulation, continuity and absence of interference resistance** of the connections:

computer connector A **track 29** → **track 4** of the temperature sensor
computer connector A **track 26** → **track 5** of the temperature sensor

Repair if necessary.

Check **the resistance value** of the sensor between:
track 4 and **track 5** of the internal temperature sensor connector and replace the sensor if the resistance is not approximately: **10 kΩ** at **25°C**.

If the fault is still present, **replace** the internal temperature sensor.

AFTER REPAIR	Clear the fault memory. Deal with any other faults.

GETtheMANUALS.org

DF018 PRESENT OR STORED	RIGHT-HAND MIXING MOTOR CIRCUIT

NOTES	**Conditions for applying the fault finding procedure to stored faults:** The fault is declared present after the air conditioning has been switched on and the right-hand temperature control has been operated.
	Special notes: The dashboard must be removed to allow access to check the mixer motor.

Use the bornier and check the **resistance value** of the motor as well as the **insulation to earth and to + 12 V** of the connections between:
Track 26 and **track 27** of computer connector B or tracks 11 and 12 of the new 2005 redesigned computer connector B.
The motor should have a resistance of approximately: **36** Ω at **20°C**.

If the value is incorrect, or if the fault is still present due to a poor or loose connection: **remove the dashboard** to gain access to the right-hand mixing motor.

Check **the connection and condition** of the right-hand mixing motor connector.
Replace the connector if necessary.

Check that the mixing motor flap is not **jammed**.
Repair if necessary.

Use the bornier to check the insulation, **continuity and the absence of interference resistance** on the following connections:

computer connector B **track 26** → **track A** of the right-hand mixing motor
computer connector B **track 27** → **track B** of the right-hand mixing motor
or
computer connector B **track 11** → **track A** of the right-hand mixing motor
computer connector B **track 12** → **track B** of the right-hand mixing motor
for the new 2005 redesigned computer.

Repair if necessary.

Check the resistance value of the right-hand mixing motor by measuring between:
track A and **track B** of the mixing motor; replace the motor if the resistance is not approximately: **36 Ω** at **20°C**.

If the fault is still present, **replace** the right-hand mixing motor.

AFTER REPAIR	Follow the instructions to confirm repair. Clear the stored faults. Deal with any other faults.

GETtheMANUALS.org

DF019 PRESENT OR STORED	LEFT-HAND MIXING MOTOR CIRCUIT

NOTES	**Conditions for applying the fault finding procedure to stored faults:** The fault is declared present after the air conditioning has been switched on and the left-hand side temperature control has been operated.
	Special notes: The dashboard must be removed to allow access to check the mixer motor.

Connect the bornier in place of the computer and check the **resistance value** of the motor as well as the **insulation from the earth and from + 12 V** of the connections by measuring between:
track 22 and **track 23** of computer connector B or tracks 7 and 8 of the new 2005 redesigned computer connector B.
The motor should have a resistance of approximately: **36** Ω at **20˚C**.

If the value is incorrect, or if the fault is still present due to a poor or loose connection: **remove the dashboard** to gain access to the left-hand mixing motor.

Check **the connection and condition** of the left-hand mixing motor.
Replace the connector if necessary.

Check that the mixing motor flap is not **jammed**.
Repair if necessary.

Use the bornier to check the **insulation, continuity and the absence of interference resistance** on the connections:

computer connector B **track 22** → **track A** of the left-hand mixing motor
computer connector B **track 23** → **track B** of the left-hand mixing motor
or
computer connector B **track 7** → **track A** of the left-hand mixing motor
computer connector B **track 8** → **track B** of the left-hand mixing motor
for the new 2005 redesigned computer.

Repair if necessary.

Check the resistance value of the left-hand mixing motor by measuring between:
track A and **track B** of the mixing motor; replace the motor if the resistance is not approximately: **36** Ω at **20˚C**.

If the fault is still present, **replace** the left-hand mixing motor.

AFTER REPAIR	Follow the instructions to confirm repair. Clear the stored faults. Deal with any other faults.

GETtheMANUALS.org

DF020 PRESENT	EVAPORATOR TEMPERATURE SENSOR CIRCUIT CO : open circuit CC : short circuit

NOTES	None.

Check **the connection and condition** of the evaporator temperature sensor connector.
Replace the connector if necessary.

Use the bornier to check the **insulation, continuity and the absence of interference resistance** on the connections:

computer connector B **track 28** → **track 1** of the temperature sensor
computer connector B **track 15** → **track 2** of the temperature sensor
or
computer connector B **track 13** → **track 1** of the temperature sensor
computer connector B **track 5** → **track 2** of the temperature sensor
for the new 2005 redesigned computer.

Repair if necessary.

Check the resistance value of the evaporator temperature sensor by measuring between:
track 1 and the **track 2** of the evaporator temperature sensor connector and replace the sensor if the resistance is not approximately: **30 kΩ** at **25°C**.

If the fault is still present, **replace** the evaporator temperature sensor.

AFTER REPAIR	Clear the fault memory. Deal with any other faults.

GETtheMANUALS.org

DF021 PRESENT OR STORED	RECIRCULATION MOTOR CIRCUIT

NOTES	**Conditions for applying the fault finding procedure to stored faults:** The fault is declared present after the climate control has been switched on and the air recirculation control has been activated.
	Special notes: The air recirculation motor is located beneath the particle filter and the base of the glove compartment has to be removed to gain access to it.

Check **the connection and condition** of the recirculation motor.
Replace the connector if necessary.

Check that the recirculation motor flap is not **jammed**.
Repair if necessary.

Connect the bornier in place of the computer and check **the insulation, continuity and absence of interference resistance** of the connections:

(left-hand drive)
computer connector B **track 29** → **track A** of the air recirculation motor
computer connector B **track 30** → **track B** of the air recirculation motor
or
computer connector B **track 14** → **track A** of the air recirculation motor
computer connector B **track 15** → **track B** of the air recirculation motor
for the new 2005 redesigned computer.

(right-hand drive)
computer connector B **track 29** → **track B** of the air recirculation motor
computer connector B **track 30** → **track A** of the air recirculation motor
or
computer connector B **track 14** → **track B** of the air recirculation motor
computer connector B **track 15** → **track A** of the air recirculation motor
for the new 2005 redesigned computer.

Repair if necessary.

Check the resistance value of the recirculation motor by measuring between:
track A and **track B** of the recirculation motor connector and replace the motor if the resistance is not approximately: **36** Ω at **20°C**.

If the fault is still present, **replace** the recirculation motor.

AFTER REPAIR	Follow the instructions to confirm repair. Clear the fault memory. Deal with any other faults.

GETtheMANUALS.org

DF026 PRESENT	SOLAR RADIATION SENSOR CIRCUIT CO : open circuit CC : short circuit

NOTES	**Special notes:** The sunlight sensor (a little black button) is located on top of the instrument panel, on the windscreen side.

Check that the solar radiation sensor is not hidden under something (nothing should be placed on top of the sensor).

Check **the connection and condition** of the solar radiation sensor connector.
Replace the connector if necessary.

Connect the bornier in place of the computer and check **the insulation, continuity and absence of interference resistance** of the connections:

computer connector A **track 26** → **track 1** of the solar radiation sensor
computer connector A **track 19** → **track 2** of the solar radiation sensor

Repair if necessary.

If the fault is still present, **replace** the solar radiation sensor.

AFTER REPAIR	Clear the fault memory. Deal with any other faults.

ACREGX731.0

GETtheMANUALS.org

DF027 PRESENT	HUMIDITY SENSOR CIRCUIT

NOTES	**Special notes:** The humidity sensor is attached to a printed circuit with the interior temperature sensor. This component is located in the fixed casing below the interior rear-view mirror.

Check **the connection and condition** of the humidity sensor connector.
Replace the connector if necessary.

With the ignition on, check that the humidity sensor fan **is operating correctly**.
If it is not operating, check for **+ 12 volts** on **track 1** of the humidity sensor connector and an **earth** on **track 3**.
If the fan supply is correct and the fault is still present, replace the **sensors/fan** (the fan is not available separately).

Connect the bornier in place of the computer and check **the insulation, continuity and absence of interference resistance** of the connections:

computer connector A **track 26** → **track 5** of the humidity sensor
computer connector A **track 22** → **track 6** of the humidity sensor

Repair if necessary.

If the fault is still present, **replace** the humidity sensor.

AFTER REPAIR	Clear the fault memory. Deal with any other faults.

GETtheMANUALS.org

DF028 PRESENT OR STORED	FOOTWELL/VENTILATION DISTRIBUTION MOTOR CIRCUIT

NOTES	**Conditions for applying the fault finding procedure to stored faults:** The fault is declared present after: the air conditioning has been switched on and the air distribution control has been operated.

Use the bornier and check the **resistance value** of the motor as well as the **insulation to earth and to + 12 V** of the connections between:
Track 24 and **track 25** of computer connector B or tracks 9 and 10 of the new 2005 computer connector B.
The motor should have a resistance of approximately: **36** Ω at **20°C**.

If the value is incorrect, or if the fault is still present due to a poor or loose connection: **remove the dashboard** to gain access to the footwell/ventilation distribution motor.

Check **the connection and condition** of the footwell distribution motor connector.
Replace the connector if necessary.

Check that the distribution motor flap is not **jammed**.
Repair if necessary.

Use the bornier to check the **insulation, continuity and the absence of interference resistance** on the connections:

computer connector B **track 24** → **track A** of the footwell air distribution motor
computer connector B **track 25** → **track B** of the footwell air distribution motor
or
computer connector B **track 9** → **track A** of the footwell air distribution motor
computer connector B **track 10** → **track B** of the footwell air distribution motor
for the new 2005 redesigned computer.

Repair if necessary.

Check the resistance value of the distribution motor by measuring between:
track A and **track B** of the distribution motor connector; replace the motor if the resistance is not approximately: **36 Ω** at **20°C**.

If the fault is still present, **replace** the footwell distribution motor.

AFTER REPAIR	Follow the instructions to confirm repair. Clear the stored faults. Deal with any other faults.

GETtheMANUALS.org

DF029 PRESENT OR STORED	DE-ICING DISTRIBUTION MOTOR CIRCUIT

NOTES	**Conditions for applying the fault finding procedure to stored faults:** The fault is declared present after: the air conditioning has been switched on and the air distribution control has been operated.

Connect the bornier in place of the computer and check the **resistance value** of the motor as well as the **insulation from earth and + 12 volts** of the connections by measuring between:
Track 20 and **track 21** of computer connector B.
The motor should have a resistance of approximately: **36** Ω at **20°C**.

If the value is incorrect, or if the fault is still present due to a poor or loose connection, **remove the dashboard** to gain access to the de-icing distribution motor.

Check the **connection and condition** of the de-icing distribution motor connector.
Replace the connector if necessary.

Check that the de-icing distribution motor flap is not **jammed**.
Repair if necessary.

Connect the bornier in place of the computer and check **the insulation, continuity and absence of interference resistance** of the connections:

computer connector B **track 20** ⟶ **track B** of the de-icing distribution motor
computer connector B **track 21** ⟶ **track A** of the de-icing distribution motor

Repair if necessary.

Check the resistance value of the distribution motor by measuring between:
track A and **track B** of the distribution motor connector; replace the motor if the resistance is not approximately: **36 Ω** at **20°C**.

If the fault is still present, **replace** the de-icing distribution motor.

AFTER REPAIR	Follow the instructions to confirm repair. Clear the fault memory. Deal with any other faults.

GETtheMANUALS.org

DF030 PRESENT	COMPRESSOR OUTPUT CONTROL CIRCUIT CO : open circuit CC : short circuit

NOTES	**Special notes:** The compressor output is controlled electrically by a control valve on F4R and G9T engines (Delphi Harrison v5E compressor). As V4Y and P9X engines (Calsonic Kansel and Denso) are not fitted with this control valve, the output is controlled pneumatically. This fault finding procedure **can therefore not be carried out** on vehicles fitted with V4Y and P9X engines.

Check the **connection and condition** of the compressor output control connector. Repair if necessary.
With the ignition on, check **for + 12 volts** on **track B** of the compressor output control connector. Repair if necessary.
Connect the bornier in place of the computer and check **the insulation, continuity and the absence of interference resistance** of the connection: computer connector A **track 7** ⟶ **track A** of the compressor output control connector. Repair if necessary.
Measure the resistance between: **track A** and **track B** of the compressor output control solenoid valve and replace the compressor if the resistance is not approximately: **18.5 Ω ± 0.5%** at **25˚C**.
If the fault is still present, the climate control computer may be damaged, contact Techline.

AFTER REPAIR	Clear the fault memory. Deal with any other faults.

ACREGX731.0

GETtheMANUALS.org

DF033 PRESENT OR STORED	REFRIGERANT FLUID CHARGE

NOTES	**Conditions for applying the fault finding procedure to stored faults:** Once the fault is stored, it is unlikely to reappear (six consecutive journeys, etc.), therefore, the fault finding procedure should be carried out even if the fault is only stored.
	Special notes: The refrigerant fill is measured following road tests at 54 mph (90 km/h) (maximum capacity). The fault will be confirmed after the 6th test, if the above conditions are observed. In vehicles with pneumatically controlled compressors, the compressor compensates for the loss of refrigerant by minimizing its capacity. Consequently, the air conditioning becomes less efficient. **Priority when dealing with a number of faults:** – First deal with the DF002 - refrigerant fill fault if it is present or stored.

Check that there are **no refrigerant fluid leaks** in the air conditioning system. Repair if necessary.
Check that the compressor is operating (belt broken). Repair if necessary.
Check the refrigerant level (for reference, the amount of liquid to use is **650 grams ± 25 g**).

AFTER REPAIR	Clear the fault memory. Deal with any other faults.

GETtheMANUALS.org

DF035 PRESENT	TOXICITY SENSOR CIRCUIT (CO) CO : open circuit CC : short circuit

NOTES	**Special notes:** The toxicity sensor is located behind the air recirculation motor (to the right of the particle filter) and the bottom of the glove compartment has to be removed to gain access to it. If a sensor needs to be replaced and the new sensor has been stored in a polluted environment, the ignition must be switched on and off five times after the sensor has been fitted in order to lower the pollution threshold.

Check **the connection and condition** of the toxicity sensor connector.
Replace the connector if necessary.

Connect the bornier in place of the computer and check **the insulation, continuity and absence of interference resistance** of the connections:

computer connector B **track 16** → **track 5** of the toxicity sensor
computer connector B **track 18** → **track 7** of the toxicity sensor
computer connector B **track 19** → **track 10** of the toxicity sensor
or
computer connector B **track 1** → **track 5** of the toxicity sensor
computer connector B **track 3** → **track 7** of the toxicity sensor
computer connector B **track 4** → **track 10** of the toxicity sensor
for the new 2005 redesigned computer.

Repair if necessary.

If the fault is still present, **replace** the toxicity sensor.

AFTER REPAIR	Clear the fault memory. Deal with any other faults.

GETtheMANUALS.org

DF036 PRESENT	TOXICITY SENSOR CIRCUIT (NO) CO : open circuit CC : short circuit

NOTES	**Special notes:** The toxicity sensor is located behind the air recirculation motor (to the right of the particle filter). The base of the glove compartment has to be removed to gain access to it. If a sensor needs to be replaced and the new sensor has been stored in a polluted environment, the ignition must be switched on and off five times after the sensor has been fitted in order to lower the pollution threshold.

Check **the connection and condition** of the toxicity sensor connector.
Replace the connector if necessary.

Connect the bornier in place of the computer and check **the insulation, continuity and absence of interference resistance** of the connections:

computer connector B **track 16** → **track 5** of the toxicity sensor
computer connector B **track 17** → **track 6** of the toxicity sensor
computer connector B **track 19** → **track 10** of the toxicity sensor
or
computer connector B **track 1** → **track 5** of the toxicity sensor
computer connector B **track 2** → **track 6** of the toxicity sensor
computer connector B **track 4** → **track 10** of the toxicity sensor
for the new 2005 redesigned computer.

Repair if necessary.

If the fault is still present, **replace** the toxicity sensor.

AFTER REPAIR	Clear the fault memory. Deal with any other faults.

ACREGX731.0

GETtheMANUALS.org

DF043 PRESENT	MULTIPLEX NETWORK DEF : apply the multiplex network fault finding procedure 1.DEF: Apply the multiplex network fault finding procedure

NOTES	None.

Check **the connection and condition** of the climate control control panel connectors.
Repair if necessary.

Connect the bornier in place of the computer and check **the insulation, continuity and absence of interference resistance** of the connections:

computer connector A **track 9** → **track CAN L** of the UCH
computer connector A **track 10** → **track CAN H** of the UCH
(refer to diagrams for the vehicle and model year concerned).

Repair if necessary.

If the fault is still present, **carry out fault finding** on the multiplex network.

AFTER REPAIR	Clear the fault memory. Deal with any other faults.

GETtheMANUALS.org

DF082 PRESENT OR STORED	FRONT PASSENGER COMPARTMENT VENTILATION CIRCUIT

NOTES	**Conditions for applying the fault finding procedure to stored faults:** The fault is declared present after: the ventilation is switched on.
	Special notes: An open circuit on track 27 (passenger compartment fan assembly power module control) will not be detected by the tool but a customer complaint is likely (**ALP7** and **ALP11**) as the passenger compartment ventilation and climate control will no longer operate.

Check **the condition and connection** of the black 2 × 5-track connector screwed under the glove compartment as well as **the connection and condition** of the following three connectors:
– the **blue 2-track** connector and the **black 4-track connector** of the fan assembly power module.
– the **black 2-track** connector of the fan.
Repair if necessary.

With the ignition on, check for **+12 volts** on **track B5** and an earth on **track B4** of the black 2 × 5-track connector of the passenger compartment fan assembly.

Connect the bornier in place of the computer and check **the insulation, continuity and absence of interference resistance** of the connections:
computer connector A **track 13** ⟶ **track A2** of the power module connector
computer connector A **track 27** ⟶ **track A3** of the power module connector
Repair if necessary.

Disconnect the black 2-track connector from the fan and **measure the resistance** of the fan between track A and track B.
Replace the fan if the resistance is not approximately: **0.2 Ω < R < 0.5 Ω**

If the fault is still present, **replace** the fan assembly power module.

AFTER REPAIR	Clear the fault memory. Follow the instructions to confirm repair. Deal with any other faults.

GETtheMANUALS.org

DF090 PRESENT	COMPRESSOR CONTROL CO : open circuit CC : short circuit

NOTES	**Conditions for applying the fault finding procedure to stored faults:** The fault is declared present after: – an attempt to activate the air conditioning due to a short circuit at 12 volts. – air conditioning inactive due to a short circuit at the earth or an open circuit.

Check the **connection and condition** of the compressor clutch connector.
Repair if necessary.

With the ignition on, check **for +12 volts** on **track B** of the compressor clutch connector for F4RT, G9T and P9X engines and on track 1 for V4Y engines.

Connect the bornier in place of the computer and check **the insulation, continuity and the absence of interference resistance** of the following connections:

computer connector A **track 15** ⟶ **track A** of the compressor clutch (for F4RT, G9T and P9X engines).

computer connector A **track 15** ⟶ **track 2** of the compressor clutch (for V4Y engines).

Repair if necessary.

Measure the resistance between **track A** and **track B** or track 1 and track 2 of the compressor clutch and replace the compressor if the resistance is not between 3 and 4 Ω.

AFTER REPAIR	Clear the fault memory. Deal with any other faults.

GETtheMANUALS.org

DF092 PRESENT	INJECTION MULTIPLEX SIGNAL ABSENT DEF : apply the multiplex network fault finding procedure 1.DEF: Apply the multiplex network fault finding procedure

NOTES	None.

Check **the connection and condition** of the climate control control panel connectors.
Repair if necessary.

Connect the bornier in place of the computer and check **the insulation, continuity and absence of interference resistance** of the connections:

computer connector A **track 9** → **track CAN L** of the UCH (refer to diagrams for the vehicle and model year concerned).

computer connector A **track 10** → **track CAN H** of the UCH (refer to diagrams for the vehicle and model year concerned).

Repair if necessary.

If the fault is still present, **carry out fault finding** on the multiplex network.

AFTER REPAIR	Clear the fault memory. Deal with any other faults.

GETtheMANUALS.org

DF093 PRESENT	NO UCH MULTIPLEX SIGNAL DEF : apply the multiplex network fault finding procedure 1.DEF: Apply the multiplex network fault finding procedure

NOTES	None.

Check **the connection and condition** of the climate control control panel connectors.
Repair if necessary.

Connect the bornier in place of the computer and check **the insulation, continuity and absence of interference resistance** of the connections:

computer connector A **track 9** → **track CAN L** of the UCH (refer to diagrams for the vehicle and model year concerned).

computer connector A **track 10** → **track CAN H** of the UCH (refer to diagrams for the vehicle and model year concerned).

Repair if necessary.

If the fault is still present, **carry out fault finding** on the multiplex network.

AFTER REPAIR	Clear the fault memory. Deal with any other faults.

GETtheMANUALS.org

DF094 PRESENT	NO ABS MULTIPLEX SIGNAL DEF : apply the multiplex network fault finding procedure 1.DEF: Apply the multiplex network fault finding procedure

NOTES	None.

Check **the connection and condition** of the climate control control panel connectors.
Repair if necessary.

Connect the bornier in place of the computer and check **the insulation, continuity and absence of interference resistance** of the connections:

computer connector A **track 9** → **track CAN L** of the UCH (refer to diagrams for the vehicle and model year concerned).

computer connector A **track 10** → **track CAN H** of the UCH (refer to diagrams for the vehicle and model year concerned).

Repair if necessary.

If the fault is still present, **carry out fault finding** on the multiplex network.

AFTER REPAIR	Clear the fault memory. Deal with any other faults.

GETtheMANUALS.org

MARKINGS ON FRONT FAN, TOXICITY SENSOR, LEFT-HAND MIXING MOTOR AND RIGHT-HAND MIXING MOTOR CONNECTOR WIRES

Black 4-track front fan power module connector, viewed from behind with the location notch on the top, from left to right:
– spare track
– track 3 fan unit control (computer connector A track 27)
– track 2 fan unit speed feedback signal (computer connector A track 13)
– track 1 12 volt supply

Toxicity sensor connector, viewed from behind with location notch on the top, from left to right:
– track 5 5-volt supply (computer connector B track 16, or computer connector B track 1 for the 2005 redesign)
– track 8 NOx signal (computer connector B track 17, or computer connector B track 2 for the 2005 redesign)
– track 7 CO signal (computer connector B track 18, or computer connector B track 3 for the 2005 redesign)
– spare track
– spare track
– track 10 earth (computer connector B track 19, or computer connector B track 4 for the 2005 redesign)

Left-hand mixing motor connector, viewed from behind with location notch on the top, from left to right:
– track 5 control 1 of the right-hand mixing motor (computer connector B track 22, or computer connector B track 7 for the 2005 redesign)
– track 6 control 2 of the right-hand mixing motor (computer connector B track 23, or computer connector B track 8 for the 2005 redesign)
– spare track
– spare track
– spare track
– spare track

Right-hand mixing motor connector, viewed from behind with location notch on the top, from left to right:
– track 5 control 1 of the right-hand mixing motor (computer connector B track 26, or computer connector B track 11 for the 2005 redesign)
– track 6 control 2 of the right-hand mixing motor (computer connector B track 27, or computer connector B track 12 for the 2005 redesign)
– spare track
– spare track
– spare track
– spare track

GETtheMANUALS.org

MEASURING THE CONTROL VOLTAGE OF THE FRONT PASSENGER COMPARTMENT FAN UNIT POWER MODULE

There are two ways to measure the control voltage of the passenger compartment blower power module:

1 / Measuring on a multimeter (in voltmeter position):

With the power module connector connected, measure across **track 3** of the module and the earth.
At speed 0, the voltage measured should be approximately **6 volts**.
At maximum speed (8) the voltage should be negligible (± **0.5 volts).**
At the seven intermediary speeds, the voltage varies between **0 and 6 volts**.

Examples of measurements taken with the voltmeter with the engine at idling speed (values given as a guide):

speed **0**	6 Volts
speed **1**	5.1 Volts
speed **2**	4.75 Volts
speed **3**	4.36 Volts
speed **4**	3.91 Volts
speed **5**	3.48 Volts
speed **6**	3.02 Volts
speed **7**	2.61 Volts
speed **8**	0.20 Volts

2 / Measuring using an oscilloscope (Optima 5800, Clip technique or NXR):

The fan power module is controlled by pulse width modulated control voltage (PWM).

This control voltage is always **6 Volts** whereas the control signal (square pulse signal) varies: the range and frequency do not move, the **high status (6 Volts)** varies in relation to the **low status (0 Volts)**.

To measure, connect the oscilloscope earth lead to the battery earth and the oscilloscope measuring lead to **track 3** of the power module (module connector connected). Adjust the time base on the oscilloscope to **2 ms** divisions with a gauge of **5-volt** divisions.

The signals obtained should be: a high status of **6 Volts** for **7.6 ms** and a low status of **0 Volts** for **0.4 mins** for speed 0 and a straight line at **0 Volts** for speed 8.

GETtheMANUALS.org

Example of measurements for the seven speeds in between (values given as a guide):

Fan unit speed	duration of high status	duration of low status
speed **1**	7.2 ms	0.8 ms
speed **2**	6.4 ms	1.6 ms
speed **3**	6 ms	2 ms
speed **4**	5.4 ms	2.4 ms
speed **5**	4.8 ms	3.2 ms
speed **6**	4 ms	4 ms
speed **7**	3.6 ms	4.4 ms

Using a multimeter in voltmeter position, measure the control voltage of the rear fan unit

With the fan unit connected, measure across **track B** of the fan unit and the earth.
At speed 0, the voltage measured should be **negligible**.
At maximum speed (3), the voltage should be **9.4 volts ± 0.5 volts**.
For the two intermediate speeds, the voltage varies between **0 and 9.4 volts**.

Examples of measurements taken with the voltmeter with the engine at idling speed (values given as a guide):

speed **0**	0 volts
speed **1**	4.6 volts
speed **2**	6.5 volts
speed **3**	9.4 volts

GETtheMANUALS.org

REPLACING THE CLIMATE CONTROL COMPUTER

– Note the computer configuration according to the optional equipment fitted on the vehicle.

– Ensure that the ignition is switched off.

– Replace the computer (control panel).

– Switch on the ignition and carry out a check using the diagnostic tool.

– Configure the computer according to the options available on the vehicle.

– Go to the read configuration menu and confirm that the configurations have been stored.

– Check for faults and carry out fault finding procedures on any faults that have recurred.

– Clear any stored faults.

– Start the engine, switch on the air conditioning and ensure that it is operating correctly.

COLOUR CODING OF COMPUTER CONNECTORS:

– the **grey 30-track** climate control computer connector is referred to in this section as: **connector A**.

– the **green 30-track** climate control computer connector is referred to in this section as: **connector B**.

– The green 15-track connector of the new 2005 redesigned climate control computer is also connector B of the new 2005 redesigned computer.

Method of recognising the 2005 redesigned computer:

– From the S23C31 software, software/calibration part number: 8 200 487 008.

– Visually, you can recognise this computer by looking at the rear side of the control panel: there should be a green 15-track connector, not a 30-track connector.

GETtheMANUALS.org

NOTES	Only carry out this conformity check after a **full check** using **the diagnostic tool** (the values shown in this conformity check are given as a guide only). **Test conditions**: engine off, ignition on, **air conditioning off**.

Function	Parameter or Status Check or action		Display and notes	Fault finding
Computer voltage supply.	**ET001:**	+ accessories	**PRESENT**	In the event of a fault occurring with the statuses and parameters, check the **insulation, continuity and resistance interference** of the computer earths and supplies (see wiring diagrams). If the fault is still present, carry out **fault finding on the charging circuit**.
	ET034:	**+ 12 V** battery	**PRESENT**	
	ET007:	Computer + after ignition feed	**PRESENT**	
	PR014:	computer feed voltage	**10 V** < **X** < **12.5 V**	
Front control panel lighting.	**ET002:**	**+ 12 V** side lights	**PRESENT** when the lights are lit and **ABSENT** otherwise	In the event of a lighting fault, see **ALP 15**.
	PR103:	voltage **0 volts** controlled by a dimmer	**7 V < X < 9 V** with minimum lighting **0 V** with maximum lighting	
	PR102:	LEDs lighting up	**- 4% < X < 6%** with minimum lighting **95% < X < 105%** with maximum lighting	
Rear control panel lighting	**ET002:**	+ 12 V side lights feed	**PRESENT:** when the lights are lit and **ABSENT:** otherwise	In the event of a lighting fault, see **ALP 16**.
Air conditioning inhibition	**ET003:**	AC inhibited by injection computer	**YES**	**YES** When the air conditioning is off.

GETtheMANUALS.org

NOTES	Only carry out this conformity check after a **full check** with the **diagnostic tool** (the values shown in this conformity check are given as a guide only). **Test conditions:** engine off, ignition on, **air conditioning off**.

Function	Parameter or Status Check or action		Display and notes	Fault finding
Air conditioning authorisation	**ET140:**	air conditioning request	**NO**	**None.**
Air conditioning operating modes	**ET033:**	**Automatic mode**	**YES** if the air conditioning request is in automatic mode (press on the **AUTO** button). **NO** otherwise	If the two statuses are not operating as indicated, refer to the interpretation of these statuses.
	ET050:	**Air conditioning mode**	**YES** if the air conditioning request is in automatic mode (press on the **AC** button) **NO** otherwise	
Compressor control	**ET020:**	compressor control	**ABSENT**	Compressor control absent when the engine is not running
Refrigerant pressure	**ET005:**	refrigerant under-pressure	**NO**	If the status displays: **STATUS 1 Pressure too low**, refer to the fault finding procedure for status **ET005**.
	ET006:	refrigerant overpressure	**NO**	If the status displays: **STATUS 1 Pressure too high**, refer to the fault finding procedure for status **ET006**.
	PR016:	refrigerant fluid pressure	**1 bar** < X < **15 bar**	In the event of a fault, **apply the fault finding procedure** for fault: **DF002** Refrigerant pressure sensor circuit.
Demisting and de-icing.	**ET022:**	heated rear screen command.	**ABSENT** (the control is only authorised when the engine is running).	**None.**
	ET053:	heated windscreen signal.	**ABSENT** (the control is only authorised when the engine is running).	**None.**
Compressor output control	**PR104:**	compressor output control	**0%** (no capacity control when engine not running).	**None.**

GETtheMANUALS.org

NOTES	Only carry out this conformity check after a **full check** with the **diagnostic tool** (the values shown in this conformity check are given as a guide only). **Test conditions:** engine off, ignition on, **air conditioning off**.

Function	Parameter or Status Check or action		Display and notes	Fault finding
Power absorbed signal	**PR005:**	power absorbed signal	**0 W < X < 300 W** (ambient temperature **23°C**)	For more information, refer to the fault finding procedure for parameter **PR005**.
Interior temperature	**PR001:**	interior temperature	**interior temperature ± 5°C**	In the event of a fault, **apply the fault finding procedure** for fault: **DF007** Interior temperature sensor circuit.
External temperature	**PR002:**	external temperature	**external temperature ± 5°C**	In the event of a fault, run **fault finding on the multiplex network**.
Evaporator temperature	**PR003:**	Evaporator temperature	**evaporator temperature ± 5°C** **0 > X < 5°C** if the engine is cold and: **- 5 > X < 15°C** if the engine has been running.	In the event of a fault, **apply the fault finding procedure** for fault: **DF020** Evaporator temperature sensor circuit.
Coolant temperature	**PR004:**	Coolant temperature	**engine coolant temperature ± 5°C**	In the event of a fault, **run fault finding on the multiplex network**
front passenger compartment blower assembly	**PR008:**	fan unit speed	**4%** to **95%**	To ensure consistency between the fan assembly setpoint and the fan assembly speed, refer to the fault finding procedure for parameters **PR008** and **PR019**. In the event of a fault **apply the fault finding procedure** for fault: **DF082** Passenger compartment ventilation motor circuit.
	PR019:	PWM value passenger compartment fan assembly (PWM: modulated control voltage).	**0** to **100%**	
Rear passenger compartment blower assembly	**PR024:**	rear fan unit speed	**0%** to **85%**	To ensure that there is consistency between the fan assembly setpoint and speed, refer to the information for parameter **PR024**.

GETtheMANUALS.org

NOTES	Only carry out this conformity check after a **full check** using the **diagnostic tool** (the values shown in this conformity check are given as a guide only). **Test conditions:** engine off, ignition on, **air conditioning off**.

Function	Parameter or Status Check or action		Display and notes	Fault finding
Position of air distribution flaps.	**PR022:**	position of distribution flap - de-icing	**0%** closed to **100%** open	To check the consistency of the positions of the distribution flaps, refer to the fault finding procedure for parameters **PR022** and **PR023**. In the event of a fault **apply the fault finding procedure** for faults: **DF028** Footwell/ ventilation distribution motor circuit and **DF029** Distribution/ de-icing motor circuit.
	PR023:	position of footwell/ ventilation distribution flaps	**0%** closed to **100%** open	
Position of left-hand mixing flap	**PR020:**	position of left-hand mixing flap	**0%** maximum cold to **100%** maximum hot	In the event of a fault **apply the fault finding procedure** for fault: **DF019** Left-hand mixing motor circuit.

GETtheMANUALS.org

NOTES	Only carry out this conformity check after a **full check** with the **diagnostic tool** (the values shown in this conformity check are given as a guide only). **Test conditions:** engine off, ignition on, **air conditioning off**.

Function	Parameter or Status Check or action		Display and notes	Fault finding
Position of right-hand mixing flap	**PR021:**	position of right-hand mixing flap	**0%** maximum cold to **100%** maximum hot	In the event of a fault **apply the fault finding procedure** for fault: **DF018** Right-hand mixing motor circuit.
Solar radiation	**PR006:**	solar radiation	From **0 W** for zero solar radiation to **500 W** for maximum solar radiation	In the event of a fault **apply the fault finding procedure** for fault: **DF026** Solar radiation sensor circuit.
Humidity	**PR007:**	humidity	**0** to **100%**	In the event of a fault **apply the fault finding procedure** for fault: **DF027** Humidity sensor circuit.
CO input toxicity	**PR017:**	CO inlet toxicity	**0** to **510 ppm** **(if 510 ppm is displayed, switch the ignition on and off six times and then wait a few seconds for the value to fall).**	In the event of a fault **apply the fault finding procedure** for fault: **DF035** CO toxicity sensor circuit.

GETtheMANUALS.org

NOTES	Only carry out this conformity check after a **full check** with the **diagnostic tool** (the values shown in this conformity check are given as a guide only). **Test conditions:** engine off, ignition on, **air conditioning off**.

Function	Parameter or Status Check or action		Display and notes	Fault finding
NO input toxicity	**PR018:**	NO inlet toxicity	**0** to **1 ppm**	In the event of a fault **apply the fault finding procedure** for fault: **DF036** NO toxicity sensor circuit.
Air recirculation motor command.	**ET021:**	air recirculation motor command	**STATUS 1** air recirculation motor: recirculation **STATUS 2** air recirculation motor: external air	In the event of a fault **apply the fault finding procedure** for fault: **DF021** Air recirculation motor circuit.

GETtheMANUALS.org

NOTES	Only carry out this conformity check after a **full check** with the **diagnostic tool** (the values shown in this conformity check are given as a guide only). **Test conditions:** engine at idle speed, **air conditioning on**.

Function	Parameter or Status Check or action		Display and notes	Fault finding
Computer electrical supply	**ET001:**	+ accessories	**PRESENT**	In the event of a fault occurring with these statuses and parameters, check the **insulation, continuity and the absence of interference resistance** on the computer earths and supplies (see wiring diagrams). If the fault is still present, run **fault finding on the charging circuit**.
	ET034:	**+ 12 V** battery	**PRESENT**	
	ET007:	Computer + after ignition feed	**PRESENT**	
	PR014:	computer feed voltage	**12.5 V < X < 14.4 V**	
Air conditioning inhibition	**ET003:**	AC inhibited by injection computer	**NON:** Air conditioning authorisation (when the air conditioning is switched on, the injection computer takes approximately 5 seconds to authorise the operation).	If **YES** no air conditioning possible (engine safety). The injection computer has inhibited the operation: carry out a fault finding test on the injection system.
Air conditioning authorisation	**ET140:**	air conditioning request	**YES**	**YES** when the air conditioning is off

GETtheMANUALS.org

NOTES	Only carry out this conformity check after a **full check** with the **diagnostic tool** (the values shown in this conformity check are given as a guide only). **Test conditions:** engine at idle speed, **air conditioning on**.

Function	Parameter or Status Check or action	Display and notes	Fault finding
Compressor	**ET020:** compressor control	**PRESENT**	In the event of a fault **carry out a fault finding procedure** on fault: **DF090** Compressor control.
Compressor output control	**PR104:** compressor output control	**0** to **100%** (for compressors controlled by solenoid valves) **0**% (for pneumatically controlled compressors)	In the event of a fault **carry out a fault finding procedure** on fault: **DF030** Compressor output control circuit.
Fast idle speed	**ET027:** fast idle speed control	**ABSENT or PRESENT**	Fast idle speed **present** if the condenser outlet pressure is above 13 bar. **Special note: present** when not under pressure conditions applicable to **F4RT** and **G9T** engines.
Engine cooling fan assembly	**ET023:** Low speed fan assembly	**ABSENT or PRESENT**	One of the two fan assemblies must be present. To find out which fan assembly should be present, refer to the fault finding procedure for statuses **ET023** and **ET024**. In the event of a fault, carry out a fault finding test on the injection system.
	ET024: high speed fan assembly	**ABSENT or PRESENT**	
Power consumed by the compressor	**PR005:** power absorbed signal	from **100 W** to **1700 W** at idle speed (at 23˚C, several seconds after the compressor has been actuated)	For more information, refer to the fault finding procedure for parameter **PR005**.

GETtheMANUALS.org

NOTES	Only carry out this conformity check after a **full check** with the **diagnostic tool** (the values shown in this conformity check are given as a guide only). **Test conditions:** engine at idle speed, **air conditioning on**.

Function	Parameter or Status Check or action		Display and notes	Fault finding
Refrigerant pressure	**ET005:**	refrigerant under-pressure	**NO**	In the event of a fault, refer to the fault finding procedure for status **ET005**.
	ET006:	refrigerant overpressure	**NO**	In the event of a fault, refer to the fault finding procedure for status **ET006**.
	PR016:	refrigerant fluid pressure	**3 bar < X < 25 bar** (not including the compressor jumps when the engine is started).	In the event of a fault **apply the fault finding procedure**for fault: **DF002** Refrigerant pressure sensor circuit.
Air recirculation mode	**ET071:**	automatic recirculation mode	**YES** if recirculation is controlled manually and **NO** otherwise.	**None.**
Automatic mode	**ET033:**	automatic mode	**YES** if air conditioning requested in automatic mode (**AUTO** pressed) and **NO** otherwise.	When the air conditioning system is operating (compressor engaged), one of the two statuses (or both) should display **YES**. If both statuses display **NO**, refer to the interpretation of these statuses.
Air conditioning mode	**ET050:**	air conditioning mode	**YES** if air conditioning requested in manual mode (press on the **AC** button) and NO otherwise.	
Rear passenger compartment blower assembly	**PR024:**	Rear blower speed	**0% < X < 85%**	To ensure that the rear fan assembly setpoint and speed are consistent, refer to the fault finding procedure for parameter **PR024**.

GETtheMANUALS.org

NOTES	Only carry out this conformity check after a **full check** with the **diagnostic tool** (the values shown in this conformity check are given as a guide only). **Test conditions:** engine at idle speed, **air conditioning on**.

Function	Parameter or Status Check or action		Display and notes	Fault finding
Evaporator temperature	**PR003:**	Evaporator temperature	**- 5 > X < 15°C** after running for a few minutes	In the event of a fault, **apply the fault finding procedure** for fault: **DF020** Evaporator temperature sensor circuit.
Coolant temperature	**PR004:**	Coolant temperature	**engine coolant temperature ± 5°C**	In the event of a fault, run **fault finding on the multiplex network**.
Interior temperature	**PR001:**	internal temperature	**internal temperature ± 5°C**	In the event of a fault **apply the fault finding procedure** for fault: **DF007** Internal temperature sensor circuit.
External temperature	**PR002:**	external temperature	**external temperature ± 5°C**	In the event of a fault, run **fault finding on the multiplex network**.
Demisting and de-icing	**ET022:**	heated rear screen switch	**PRESENT** when the heated rear screen is switched on (with the engine running) and **ABSENT** otherwise.	In the event of a fault, **carry out the fault finding procedure** for fault: **DF005** Heated rear screen relay control circuit.

GETtheMANUALS.org

NOTES	Only carry out this conformity check after a **full check** with the **diagnostic tool** (the values shown in this conformity check are given as a guide only). **Test conditions:** engine at idle speed, **air conditioning on** (compressor engaged).

Function	Parameter or Status Check or action		Display and notes	Fault finding
front passenger compartment blower assembly	**PR008:**	Fan speed	**4% < X < 95%**	In the event of a fault **apply the fault finding procedure** for fault: **DF082compartment ventilation motor circuit**. NOTE: To check the consistency of these signals, refer to the fault finding procedure for parameters **PR008** and **PR019**.
	PR019:	Passenger compartment fan assembly PWM setting (PWM: modulated control voltage).	**0% < X < 100%**	
NO input toxicity	**PR018:**	NO input toxicity	**0 ppm < X <1 ppm**	In the event of a fault, apply the fault finding procedure for fault: **DF036 NO toxicity sensor circuit**.
CO input toxicity	**PR017:**	CO input toxicity	**0 ppm < X < 510 ppm** NOTE: (if "510 ppm" is constantly displayed, switch the ignition off and on six times and wait a few seconds for the value to fall again).	In the event of a fault, apply the fault finding procedure for fault: **DF035 CO toxicity sensor circuit**.
Solar radiation	**PR006:**	Solar radiation	From **0 W** for zero solar radiation to **500 W** for maximum solar radiation	In the event of a fault apply the fault finding procedure for fault **DF026 Solar radiation sensor circuit**.
Humidity	**PR007:**	humidity	**0% < X < 100%**	In the event of a fault, apply the fault finding procedure for fault **DF027 Humidity sensor circuit**.

GETtheMANUALS.org

NOTES	Only carry out this conformity check after a **full check** with the **diagnostic tool** (the values shown in this conformity check are given as a guide only). **Test conditions:** engine at idle speed, **air conditioning on** (compressor engaged).

Function	Parameter or Status Check or action		Display and notes	Fault finding
Position of air distribution flaps.	**PR022:**	Position of distribution/de-icing flaps	**0 %** closed to **100 %** open	To check the consistency of the distribution flap position, refer to the fault finding procedure for parameters **PR022** and **PR023**. In the event of a fault, apply the fault finding procedure for faults **DF028 Footwell/ ventilation motor circuit** and **DF029, Distribution/de-icing motor circuit**.
	PR023:	Footwell/ventilation flap position	**0%** closed to **100%** open	
Position of right-hand mixer flaps	**PR020:**	Position of left-hand mixing flap	**0%** maximum cold to **100%** maximum heat	In the event of a fault, apply the fault finding procedure for fault **DF019 Left-hand mixing motor circuit**.
	PR021:	Position of right-hand mixing flap	**0%** maximum cold to **100%** maximum hot	In the event of a fault, **apply the fault finding procedure** for fault: **DF018 Right-hand mixing motor circuit**.
Air recirculation motor control	**ET021:**	Air recirculation motor control	**STATUS 1 air recirculation motor:** recirculation or **STATUS 2 air recirculation motor:** external air.	In the event of a fault, apply the fault finding procedure for fault **DF021 Recirculation motor circuit**.

GETtheMANUALS.org

ET005	REFRIGERANT: UNDER-PRESSURE

NOTES	The under-pressure status rises if the pressure reading taken by the sensor is **less than 2 bar**.
	There must be no present or stored faults. (in particular, faults: **DF033** Refrigerant level and **DF002** Refrigerant pressure sensor circuit).
	Special note: The under-pressure status **inhibits** climate control operation.

Check the **connection and condition** of the refrigerant pressure sensor connector.
Replace the connector if necessary.

Connect the bornier in place of the computer and check the **insulation, continuity and the absence of interference resistance** of the following connections:

computer connector A **track 8** → **track A** of the pressure sensor
computer connector A **track 11** → **track B** of the pressure sensor
computer connector A **track 3** → **track C** of the pressure sensor

Repair if necessary.

With the ignition switched on, check that the sensor is correctly supplied by the computer by measuring between: **track A** and **track B** of the sensor.
If the voltage is not **5 volts**, change the air conditioning computer.

Check that there are **no refrigerant fluid leak**s in the air conditioning system.

If the fault is still present, **check the refrigerant level (650 ± 25 grams)**.
Refill if necessary.

If the refrigerant level is correct, there are no leaks in the air conditioning system and the pressure sensor connections checks are all sound: **replace** the pressure sensor.

AFTER REPAIR	Repeat the conformity check from the start.

GETtheMANUALS.org

ET006	REFRIGERANT: OVERPRESSURE

NOTES	The overpressure status rises if the pressure measured by the sensor is **greater than 27 bar (relative)**.
	There must be no present or stored faults. (in particular, faults: **DF033** Refrigerant level, **DF030** Compressor output control circuit and **DF002** Refrigerant pressure sensor circuit).
	Special note: The overpressure status **prevents** air conditioning operation.

For electrically controlled output:
Check the **connection and condition** of the refrigerant pressure sensor connector.
Replace the connector if necessary.

Connect the bornier in place of the computer and check the **insulation, continuity and absence of interference resistance** of the following connections:

computer connector A **track 8** → **track A** of the pressure sensor
computer connector A **track 11** → **track B** of the pressure sensor
computer connector A **track 3** → **track C** of the pressure sensor

Repair if necessary.

Display parameter: **PR016** Refrigerant pressure and check that the pressure readings drop sharply (the parameter should not remain static) after the air conditioning has been turned off.
If the pressure does not fall, **replace** the refrigerant pressure sensor.

Check that **the output control is operating correctly** by displaying parameter:
PR104 Compressor output control

– When stopped, this parameter should display **0%** (maximum output).
– With the engine running and the air conditioning switched on, this parameter should display a value between **0** and **100%** (there is no standard control case because there are multiple conditions for this case).

AFTER REPAIR	Repeat the conformity check from the start.

GETtheMANUALS.org

ET006 **CONTINUED 1**	

If the capacity does not vary and the control solenoid valve is not faulty:
With the ignition on, check for a **supply** to **track B** of the output control solenoid valve.
Repair if necessary.

If the output still does not vary: **check the refrigerant level** (650 grams) as a shortage of refrigerant may be corrected by the air conditioning system by increasing the compressor output (in order to maintain air conditioning performance).
Refill if necessary.

If the refrigerant fluid is correct and the output control is operating correctly (presence of a supply on track B of the solenoid valve and an earth control on track A) there may be a compressor output control panel mechanical fault.
If this is the case **replace the air conditioning compressor**.

For pneumatically controlled capacity:
Check the **connection and condition** of the refrigerant pressure sensor connector.
Replace the connector if necessary.

Connect the bornier in place of the computer and check the **insulation, continuity and absence of interference resistance** of the following connections:

computer connector A **track 8** → **track A** of the pressure sensor
computer connector A **track 11** → **track B** of the pressure sensor
computer connector A **track 3** → **track C** of the pressure sensor

Repair if necessary.

Display parameter: **PR016** Refrigerant pressure, and check that the pressure readings drop sharply (the parameter should not remain static) after the air conditioning has been turned off.
If the pressure does not fall, **replace** the refrigerant pressure sensor.

AFTER REPAIR	Repeat the conformity check from the start.

GETtheMANUALS.org

ET006 **CONTINUED 2**	

Check the refrigerant level (650 grams) as a shortage of refrigerant can be corrected by the air conditioning system by decreasing the compressor output. **Refill if necessary.**
If the refrigerant level is correct, there may be a mechanical fault on the compressor control board. If this is the case **replace the air conditioning compressor**.

AFTER REPAIR	Repeat the conformity check from the start.

GETtheMANUALS.org

ET023 **ET024**	LOW-SPEED FAN ASSEMBLY HIGH-SPEED FAN ASSEMBLY

NOTES	If the fan assembly is not operating as normal, carry out a complete check on the fan assembly circuit (details under fault finding - injection).

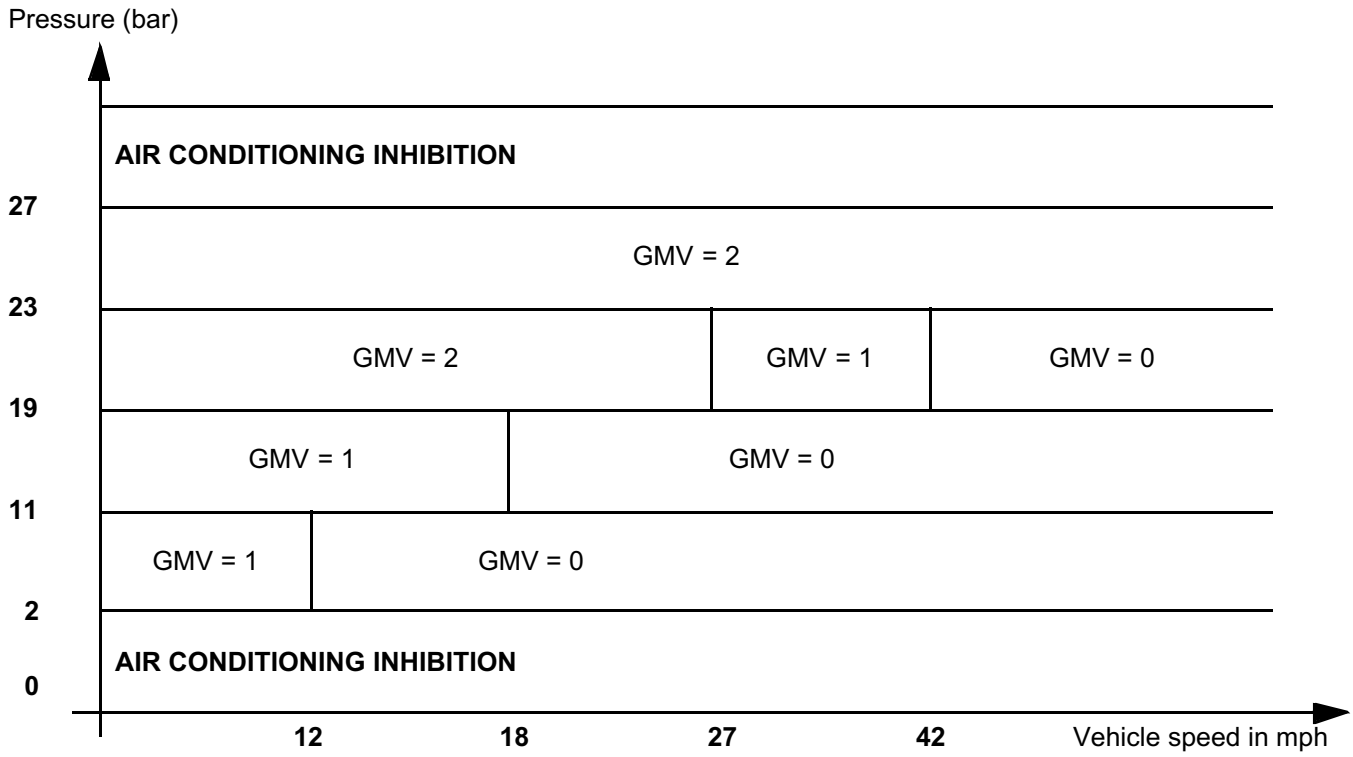

GMV = 1 Low speed cooling fan
GMV = 2 High speed cooling fan
GMV = 0 Cooling fan off

The fan assembly is not used for speeds greater than **42 mph (70 km/h)**.
Except in of rare cases where the pressure is greater than **23 bar** despite the high speed
example: (driving behind a lorry).
When the vehicle is stationary, the fan assembly is always used at low speed if the high pressure is less than **19 bar** (relative) and at high speed if not.
When the vehicle is being driven, the fan assembly may either not operate or operate at high or low speed depending on the condenser outlet pressure and the vehicle speed.

AFTER REPAIR	Repeat the conformity check from the start.

GETtheMANUALS.org

ET033 **ET050**	AUTOMATIC MODE AIR CONDITIONING MODE

NOTES	None.

ET033	The automatic mode is activated by pressing the **AUTO** button on the control panel. This mode comprises automatic operation of the air distribution, passenger compartment ventilation and compressor engagement functions according to the temperature requested. Only the temperature setpoint adjustment (left and right-hand) is made manually. After the **AUTO** button on the control panel is pressed, status **ET033** should display **YES**. If the status does not display this, check that the indicator light on the **AUTO** button lights up at the same time as indicator light on the **AC** button. If the indicator lights do not light up, take a fault reading and carry out a conformity check to check the conformity of the system. If the fault is still present, **contact the Techline**.

ET050	The air conditioning mode corresponds to the air conditioning manual mode. This mode is activated by pressing the **AUTO** button on the control panel. This mode relates to the engagement of the compressor (according to the temperature requested). Adjustments to the left-hand and right-hand temperature setpoints, air distribution, passenger compartment ventilation and air recirculation functions are made manually. When the **AC** button on the control panel is pressed, status **ET050** should display: **YES**. If the status does not display this, check that the indicator light on the **AC** button lights up. If the indicator light does not light up, take a fault reading and carry out a conformity check to check the conformity of the system. If the fault is still present, **contact the Techline**.

AFTER REPAIR	Repeat the conformity check.

GETtheMANUALS.org

PR008 **PR019**	FRONT FAN UNIT SPEED PASSENGER COMPARTMENT FRONT FAN UNIT PWM SETPOINT

NOTES	The values listed below are examples only.

Controlled values for engine stopped and engine running (tolerance ± 15%).

Blower speed	SPEED 0	SPEED 1	SPEED 2	SPEED 3	SPEED 4	SPEED 5	SPEED 6	SPEED 7	SPEED 8
Passenger compartment fan unit speed specification	**0 %**	**10 %**	**20 %**	**30 %**	**43 %**	**55 %**	**69 %**	**82 %**	**100 %**
Fan unit speed	**4 %**	**15 %**	**27 %**	**38 %**	**52 %**	**68 %**	**82 %**	**95 %**	**95 %**

AFTER REPAIR	Repeat the conformity check from the start.

GETtheMANUALS.org

PR022 **PR023**	DE-ICING DISTRIBUTION FLAP POSITION FOOTWELL VENTILATION FLAP POSITION

NOTES	The values listed below are only given as a guide (they depend on which way the flap is being moved).

Values checked with the engine stopped and engine running and air conditioning in manual mode (tolerance ± 15 %).

Position of flap controls		Position of de-icing distribution flap	Position of footwell ventilation flap
Demisting		**100 %**	**100 %**
Dashboard air vent		**6 %**	**6 %**
Footwell ventilation		**6 %**	**55 %**
Demisting + footwell ventilation		**100 %**	**55 %**
Footwell ventilation + dashboard air vent		**6 %**	**21 %**
Surround mode		**100 %**	**31 %**

AFTER REPAIR	Repeat the conformity check from the start.

ACREGX731.0

GETtheMANUALS.org

PR024	REAR FAN UNIT SPEED

NOTES	The values listed below are examples only.

Controlled values for engine off and engine running (tolerance ± 5%).

Blower speed	SPEED 0	SPEED 1	SPEED 2	SPEED 3
Fan unit speed	**0 %**	**28 %**	**55 %**	**85 %**

AFTER REPAIR	Repeat the conformity check from the start.

GETtheMANUALS.org

PR005	POWER ABSORBED SIGNAL

NOTES	The values listed below are examples only.

Whether the variable output compressor is<< pneumatic >> or electrically controlled, the power absorbed by the compressor can be anything from several hundred watts to approximately **6 kW** depending on weather conditions and vehicle speed, and also compressor rotation speed.

The power absorbed signal is a function of two parameters:
– continuous high pressure readings,
– compressor rotation speed.

The power absorbed value calculated by the climate control computer is transmitted to the engine management computer. This allows the engine management computer to anticipate the effect that the load variations induced by the compressor will have on the engine at idle speed and when in motion.

AFTER REPAIR	Repeat the conformity check from the start.

GETtheMANUALS.org

NOTES	Only refer to this customer complaint after a complete check using the diagnostic tool.

DIALOGUE FAULT

- NO DIALOGUE WITH THE COMPUTER — **ALP 0**

AIR DISTRIBUTION PROBLEM

- AIR DISTRIBUTION PROBLEM — **ALP 1**
- FAULTY FRONT AIR FLOW — **ALP 2**
- REAR AIR FLOW PROBLEM — **ALP 3**
- INEFFICIENT WINDSCREEN DEMISTING — **ALP 4**
- INEFFICIENT REAR SCREEN DE-ICING/DEMISTING — **ALP 5**
- POOR VENTILATION PERFORMANCE — **ALP 6**
- NO FRONT PASSENGER COMPARTMENT VENTILATION — **ALP 7**
- NO REAR PASSENGER COMPARTMENT FAN — **ALP 8**

HEATING FAULT

- NO HEATING OR INADEQUATE HEATING — **ALP 9**
- EXCESSIVE HEATING — **ALP 10**
- NO COLD AIR — **ALP 11**
- TOO MUCH COLD AIR — **ALP 12**

PASSENGER COMPARTMENT ODOURS

- UNPLEASANT ODOURS IN PASSENGER COMPARTMENT — **ALP 13**

GETtheMANUALS.org

NOTES	Only refer to this customer complaint after a complete check using the diagnostic tool.

WATER IN PASSENGER COMPARTMENT

WATER IS PRESENT IN PASSENGER COMPARTMENT — **ALP 14**

CONTROL PANEL FAULT

NO FRONT CONTROL PANEL LIGHTING — **ALP 15**

NO REAR CONTROL PANEL LIGHTING — **ALP 16**

COMPRESSOR NOISES

COMPRESSOR NOISES — **ALP 17**

GETtheMANUALS.org

ALP 0	No dialogue with the computer

NOTES	None.

Try the diagnostic tool on another vehicle.

Check:
– The connection between the **diagnostic tool** and the diagnostic socket (cable in good condition).
– That the fuses are sound.

Check for **+ 12 V battery feed** on **track 16,** and **+ 12 V after ignition feed** on **track 1** and an **earth** on **track 5** and on **track 4** of the diagnostic socket.
Repair if necessary.

Disconnect **connector A** from the air conditioning computer to check the **conformity of the computer feeds** and the **insulation, continuity and the absence of interference resistance** of the following connections:
Air conditioning computer connector A (grey, **30-track**)

Track 6 → **+ after ignition**
Track 18 → **+ before ignition**
Track 1 → **earth**
Track 16 → **earth**
Track 30 → **earth**
Track 5 → **track 7** of the diagnostic socket (K line)

Repair if necessary (see the vehicle wiring diagram).

AFTER REPAIR	Check that the system is operating correctly.

GETtheMANUALS.org

ALP 1	Air distribution fault

NOTES	Only consult this customer complaint after a **complete check with the diagnostic tool**.
	Special notes: Adjusting the air distribution or ventilation controls switches off automatic climate control mode.

Check that **the air circuit** (**particle filter**, scuttle panel grille, air vents, etc.) is not blocked.
Ensure that the fan blades are in good condition.
Repair, clean or replace the particle filter if necessary.

Ensure that the front fan unit is properly **sealed**.
Repair if necessary.

↓

Switch the front passenger compartment fan to full, the temperature control to very hot or very cold, and move the air distribution control.
Check that the air outlet is the one selected.

Is the air distribution correct?

YES → The air distribution is operating correctly.
If necessary, explain how the system works to the customer again.

NO

↓

Using the **diagnostic tool**, check the air distribution control by checking the distribution motor parameters.
PR022 → de-icing distribution flap position
PR023 → footwell distribution flap position

Do the flaps open 100%?

NO → Refer to the interpretation of parameters PR022 and PR023 Position of distribution flaps, and check how far the flaps open.
In the event of a problem occurring, refer to the Technical Note for fault finding strategies for distribution motors.

YES

↓

(A)

AFTER REPAIR	Check that the system is operating correctly.

ACREGX731.0

GETtheMANUALS.org

ALP 1 CONTINUED	

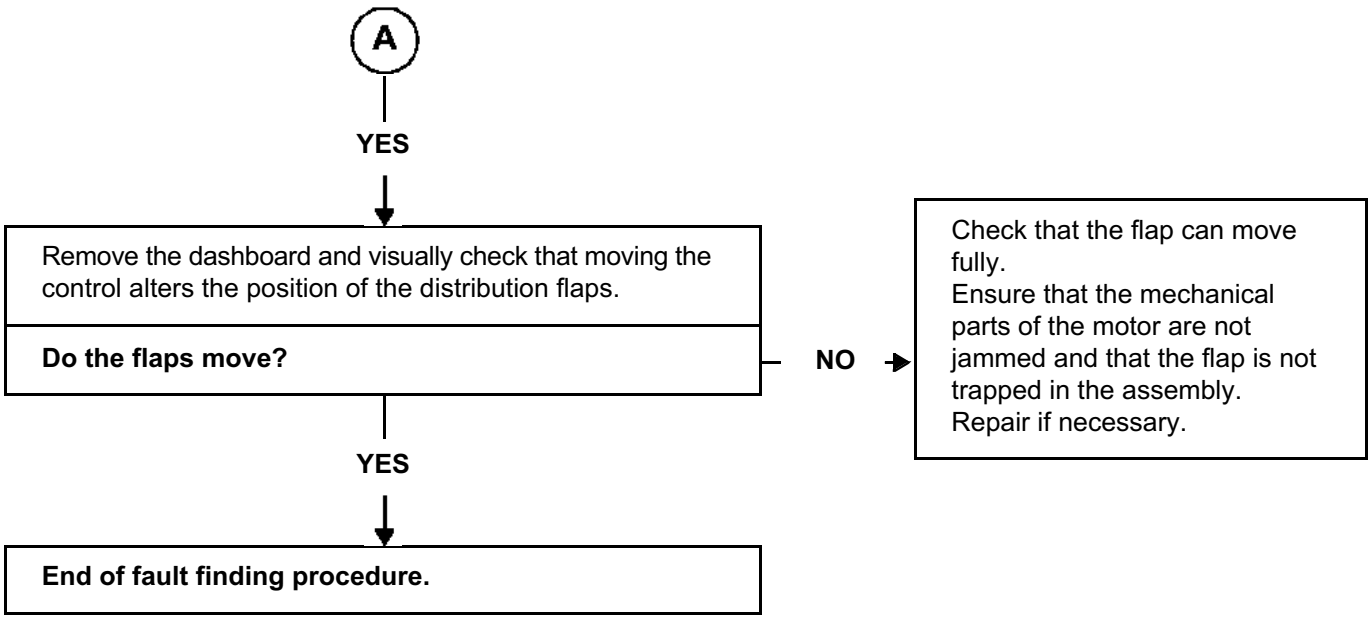

AFTER REPAIR	Check that the system is operating correctly.

ACREGX731.0

GETtheMANUALS.org

ALP 2	Faulty front air flow

NOTES	Only consult this customer complaint after a **complete check with the diagnostic tool**. Check that the customer knows how to work the air conditioning system properly.

Does the front passenger compartment fan **work**?

NO → Repair, see **ALP 7 No passenger compartment ventilation.**

YES

↓

Check that **the air circuit** (**particle filter**, scuttle panel grille, air vents and extractors, etc.) is not blocked.
Ensure that the fan blades are in good condition.
Repair, clean or replace the particle filter if necessary.

↓

Ensure that the front fan unit is properly **sealed**.
Repair if necessary.

↓

Using the **diagnostic tool**, check that the air recirculation flap is not stuck in air recirculation position using status check: **ET021** Air recirculation motor control.

↓

Does the fault disappear when the **air distribution** is changed?

YES → Ensure that all the air vents are open.
If the fault is still present, refer to **ALP 1**.

NO

↓

Run a **conformity check** as the fault may arise from a faulty signal from one of the sensors (temperature/ humidity, etc.).
Check that the internal air temperature sensor micro turbine is operating (if this is malfunctioning, the measurement could be incorrect).
Replace any faulty components.

↓

(A)

AFTER REPAIR	Check that the system is operating correctly.

ACREGX731.0

GETtheMANUALS.org

ALP 2

CONTINUED

(A)

Using the diagnostic tool, check that the fan speed corresponds to the setpoints provided by the computers (tolerance of ± 15%) by checking parameters:

PR019 → passenger compartment fan assembly modulated control voltage.

PR008 → fan assembly speed (fan speed feedback signal).

Refer to the Interpretation of parameters table **PR019** and **PR008** to ensure that the values obtained are consistent.

Does the speed correspond to the setpoint?

YES → **End of fault finding procedure.**

NO

Check that the modulated control voltage of the passenger compartment fan unit power module varies between **0** and **6 V** (from 0 to 100%) by measuring between **track A3** of the power module and the earth (connector connected).

Does the voltage vary correctly?

YES → **Replace** the power module.

NO

Check the **continuity and absence of interference resistance** of the connections:

computer connector B **track 27** → **track A3** of the power module

or the new 2005 computer connector B **track 12** → **track A3** of the module

Repair if necessary.

Is the fault still present?

NO → **End of fault finding procedure.**

YES

Replace the control panel. → **End of fault finding procedure.**

AFTER REPAIR	Check that the system is operating correctly.

ACREGX731.0

GETtheMANUALS.org

ALP 3	Faulty rear air flow

NOTES	Only consult this customer complaint after a **complete check with the diagnostic tool**. Check that the customer knows how to work the heating and ventilation properly.

does the rear passenger compartment fan **work**? — **NO** → repair, see **ALP 8**.

YES

↓

Check that **the air circuit** (**particle filter**, scuttle panel grille, air vents and extractors, etc.) is not blocked.
Ensure that the rear blower blades are in good condition.
Repair, clean or replace the particle filter if necessary.

↓

Ensure that the rear blower unit is properly **sealed**.
Repair if necessary.

↓

Check the resistance of the rear blower: **0.95 Ω**.
Replace the rear blower if necessary.

↓

Does the fault disappear when the **air distribution** is changed? — **YES** → Ensure that all the air vents are open.
If the fault is still present, refer to **ALP 1**.

↓

Using the **diagnostic tool**, check that the fan speed corresponds to the computer information (tolerance of **± 5%**) by checking parameters:
PR024 → rear fan assembly speed (fan unit speed return signal).
To ensure that the values obtained are consistent, refer to the Interpretation of parameters table **PR024**.

Does the speed comply with specifications? — **YES** → **End of fault finding procedure.**

NO

↓

(A)

AFTER REPAIR	Check that the system is operating correctly.

ACREGX731.0

GETtheMANUALS.org

ALP 3
CONTINUED

(A)

Check the resistors of the rear fan assembly resistor unit.

Replace the resistor unit if the resistances are not as follows (± **0.5 Ω**):

- V1: **5.0 Ω** (tracks C and B)
- V2: **2.4 Ω** (tracks A and B)
- V3: **0.8 Ω** (tracks D and B)

Are the resistances correct? — **NO** → **Replace** the resistor unit.

YES

Check the **continuity and absence of interference resistance** of the connections:
control unit **track B3** → **track D** of the resistance unit
control unit **track B2** → **track A** of the resistance unit
control unit **track A1** → **track C** of the resistance unit
Repair if necessary.

Is the fault still present? — **NO** → **End of fault finding procedure.**

YES

Using an ohmmeter, check that the rear fan assembly control unit works properly.

End of fault finding procedure.

AFTER REPAIR	Check that the system is operating correctly.

GETtheMANUALS.org

ALP 4	Inefficient windscreen demisting

NOTES	Only consult this customer complaint after a **complete check with the diagnostic tool**.
	Special notes: Check that the inside of the windows are not greasy, as this lowers the efficiency of the demister.

If the vehicle is fitted with a heated windscreen, use the **diagnostic tool** to check that the **computer is correctly configured** by using configuration readings: **LC015** ← Electrical windscreen.
Reconfigure the computer if necessary and ensure the heated windscreen is working correctly.

↓

Check that the air extraction vents are not blocked.
Repair if necessary.

Is the fault still present?? — **NO** → **End of fault finding procedure.**

YES

↓

Check that there are no **water leaks** into the passenger compartment which would significantly increase the humidity levels and reduce the effectiveness of demisting.
Repair if necessary (see **ALP14 Water in the passenger compartment**).

Is the fault still present?? — **NO** → **End of fault finding procedure.**

YES

↓

Check that the compressor is **working correctly** by using command: **AC021 Compressor clutch** or by switching on the air conditioning.
Repair if necessary

↓

(A)

AFTER REPAIR	Check that the system is operating correctly.

GETtheMANUALS.org

ALP 4 CONTINUED

(A)

Ensure that the water condenser outlet is not blocked up.
Repair if necessary.

Is it an **air distribution** fault? — **YES** → See **ALP 1**

NO

Is it an **air flow** fault? — **YES** → See **ALP 2.**

NO

Is it a **heater performance** fault? — **YES** → See **ALP 9 No heating or insufficient heating**

NO

Using the **diagnostic tool**, check that the air recirculation flap is in the **external air** position by checking status **ET021** Air recirculation motor control.
Repair if necessary.

Is the fault still present?

YES

Run a **conformity check** as the fault may arise from a faulty signal from one of the sensors (temperature/ humidity, etc.).
Check that the internal air temperature sensor micro turbine is operating (if this is malfunctioning, the measurement could be incorrect).
Replace any faulty components.

NO

End of fault finding procedure.

AFTER REPAIR — Check that the system is operating correctly.

ACREGX731.0

GETtheMANUALS.org

ALP 5	Inefficient rear screen de-icing/demisting

NOTES	Only consult this customer complaint after a **complete check with the diagnostic tool**.
	Special notes: – Check that the inside of the glass is not **greasy** as this lowers the de-icing efficiency. – The de-icing control is only authorised when the engine is running to save power. **Rear screen de-icing can be activated in two ways:** – Pressing the lower part of the heating switch on the control panel heats up the rear screen and the door mirrors. – Pressing the lower part of the heating switch on the control panel operates the demister (on the heated rear screen and door mirrors, ventilated windscreen and electrically heated windscreen, provided that the vehicle is fitted with these parts). Note: in both cases the activation of de-icing is only authorised when the engine is running.

Check that there are no water leaks into the passenger compartment which would significantly increase the humidity levels and reduce the effectiveness of demisting. Repair if necessary (see **ALP14 Water in the passenger compartment**).

Is the fault still present?

NO → **End of fault finding procedure.**

YES

↓

Use the **diagnostic tool** to check the heated rear screen control relay by checking statuses:
ET022 ⟶ Heated rear screen switch.
Repair if necessary (see **DF005**).

↓

(A)

AFTER REPAIR	Check that the system is operating correctly.

GETtheMANUALS.org

ALP 5 CONTINUED	

(A)

Remove the plastic pillars from the rear screen and check that **the heating wires have not been cut** by measuring their resistance (**0.5 to 1 Ω**).
Repair if necessary.

Check for an **earth** on the terminal located on the right-hand side of the heated rear screen and **+ 12 volts** (when de-icing switched on) on the left-hand side terminal.
If there is no supply to the screen, check **the continuity and interference resistance** of the connection:
Rear screen relay **track 5** → heated rear screen left-hand terminal connector
Repair if necessary.
If the fault is still present, **apply the fault finding procedure** for fault: **DF005** Heated rear screen relay control circuit.

Is the fault still present??

YES

Run a **conformity check** as the fault may arise from a faulty signal from one of the sensors (temperature/ humidity, etc).
Check that the internal air temperature sensor micro turbine is operating (if this is malfunctioning, the measurement could be incorrect).
Replace any faulty components.

NO

End of fault finding procedure.

AFTER REPAIR	Check that the system is operating correctly.

ACREGX731.0

GETtheMANUALS.org

ALP 6	Inefficient ventilation

NOTES	Only consult this customer complaint after a **complete check with the diagnostic tool**.

Is the **air flow** correct?

NO → See **ALP2** and **ALP 3**

YES

↓

Is the **air distribution** correct?

NO → See **ALP 1**

YES

↓

End of fault finding procedure.

AFTER REPAIR	Check that the system is operating correctly.

GETtheMANUALS.org

ALP 7	No front passenger compartment ventilation

NOTES	Only consult this customer complaint after a **complete check with the diagnostic tool**.

Check that the **fuses** are in good condition.

↓

Using the **diagnostic tool**, check that the fan assembly control setting displayed by the computer varies between **0** to **100%** by checking parameter **PR019 Passenger compartment fan assembly PWG setting**.

Does the value vary? — **NO** → Replace the control panel.

YES

↓

Check that the control voltage of the passenger compartment fan assembly power module varies between **0 and 6 V (from 0 to 100%)** by measuring between track A3 of the module and earth (connector connected).
Note:
For more information, consult the help to perform the measurement.

Does the voltage vary correctly?

YES → ↓

NO

↓

Connect the bornier in place of the computer and check the **insulation, continuity and absence of interference resistance** on the following connections:
computer connector A **track 27** → **track A3** of the front fan assembly power module
computer connector A **track 13** → **track A2** of the front fan assembly power module
Repair if necessary.

↓

With the ignition on, check for **+ 12 volts** on track **B5** and an **earth** on track **B4** of the black 2 x 5-track connector of the front fan assembly (screwed under the glovebox on the lower side of the console).
Repair if necessary.

↓

(A)

AFTER REPAIR	Check that the system is operating correctly.

ACREGX731.0

GETtheMANUALS.org

ALP 7 CONTINUED	

(A)

Check the **insulation, continuity and interference resistance** of the connections between:

black 2 x 5-track connector	**black 4-track connector of the power module**
track B1	**track A3**
track B2	**track A2**
track B3	**track A4**
track B5	**track A1**
track B4	**black 2-track connector of the fan assembly**
	track A
	track B
	blue 2-track connector of the power module
	track A
	track B

Repair if necessary.

Check that the fan assembly blade is not **broken or come away** from its shaft.
Check that there are no foreign bodies blocking the fan.
Repair or replace the fan assembly if necessary.

Disconnect the black 2-track connector from the fan and **check the resistance of the motor** between tracks A and B.
Replace the fan if its resistance is negligible or infinite.

Is the fault still present??

NO → **End of fault finding procedure.**

YES

Replace the power module.

AFTER REPAIR	Check that the system is operating correctly.

ACREGX731.0

GETtheMANUALS.org

ALP 8	No rear passenger compartment ventilation

NOTES	Only consult this customer complaint after a **complete check with the diagnostic tool**.

Check that the **fuses**are in good condition.

↓

With the ignition on, check for **12 V feed on track B1** of the rear fan assembly control unit.

Is there a supply?

NO ↓

Check the **continuity, insulation and the absence of interference resistance** on the following connection:
Rear control unit **Track B1** → Rear fan assembly relay **Track A5**
Repair if necessary

↓

With the ignition on, check for **+ 12 volts feed on track A1 and A3** of the rear fan assembly relay and an earth on **track A2**.
Repair if necessary (see wiring diagram).

YES ↓

↓

Check that the rear fan assembly relay is in correct working order.
Replace the relay if necessary.

↓

Using an ohmmeter, check that the rear fan assembly control unit is operating correctly:
Continuity between **track B1** and **track A1**.
Continuity between **track B1** and **track B2**.
Continuity between **track B1** and **track B3**.
Replace the rear fan assembly control unit if necessary.

↓

(A)

AFTER REPAIR	Check that the system is operating correctly.

GETtheMANUALS.org

ALP 8 CONTINUED 1	

(A)

Check the **insulation, continuity and the absence of interference resistance** of the following connection:
Rear control unit **track D** → **track B3** of the resistor unit
Rear control unit **track A** → **track B2** of the resistor unit
Rear control unit **track C** → **track A1** of the resistor unit
Repair if necessary.

Check the resistances of the rear fan assembly resistor unit (**± 0.5 Ω**).
– V1: **5.0 Ω** (tracks C and B)
– V2: **2.4 Ω** (tracks A and B)
– V3: **0.8 Ω** (tracks D and B)
Replace the resistor unit if the values measured do not correspond to those given above.

Check the consistency of the rear fan assembly control voltages according to the 3 control speeds:
Measure between **track 2** of the black 6-track intermediate connector and **earth** (refer to the **Help** section for information on taking the measurement).

Are the voltages correct?

NO

Check the **continuity, insulation and the absence of interference resistance** on the following connection:

Resistor unit	Black 6-track intermediate connector	Air conditioning computer connector A (30-track grey)
Track B	**Track2**	**Track 20**

Repair if necessary.
If the voltage is correct (or after adjusting it), disconnect the connector from **track A** of the fan assembly and repeat the previous test.

Are the voltages correct?

YES

Replace the resistor unit

(B)

AFTER REPAIR	Check that the system is operating correctly.

GETtheMANUALS.org

ALP 8 CONTINUED 2	

B

Check for an **earth on track 3** of the black 6-track intermediate connector.
Repair if necessary.

Check **the continuity, insulation and the absence of interference resistance** on the following connection:
Black 6-track intermediate connector
Track 3 → **Track 2** of the rear fan assembly relay
Track 3 → **Track A2** of the rear control panel
Track 3 → **Track B** of the rear fan assembly
Repair if necessary.

Check that the rear fan assembly blade has not **broken** or **come away** from its shaft.
Check that there are no foreign bodies blocking the fan.
Repair or replace the passenger compartment fan if necessary.

Disconnect the black **2-track** connector from the rear fan and check the resistance of the motor between **tracks A and B**.
Replace the fan if its resistance is negligible or infinite.

End of fault finding procedure.

AFTER REPAIR	Check that the system is operating correctly.

GETtheMANUALS.org

ALP 9	No heating or inadequate heating

NOTES	Only consult this customer complaint after a **complete check with the diagnostic tool**.

Is the **air flow** correct?
- **NO** → See **ALP 2**, air flow fault.
- **YES** ↓

Is the **air distribution** correct?
- **NO** → See **ALP 1**, air distribution fault.
- **YES** ↓

With a warm engine, set the heating to max.
Is the blown air hot?
- **YES** → If necessary, explain how the system works to the customer again.
- **NO** ↓

Using the diagnostic tool, check the air mixing control by checking the mixer motor parameters.
PR020 → Left-hand mixing flap position
PR021 → Right-hand mixing flap position

Do the flaps open fully?
(maximum hot position: 100% displayed on tool)
- **NO** → Run **a conformity check** on the mixing motors.
In the event of a fault, refer to the Technical Note for fault finding procedures for mixing motors (**DF018** and **DF019**).

Is the fault still present?
- **YES** → Run a **conformity check** as the fault may arise from a faulty signal from one of the sensors (temperature/humidity, etc.).
Check that the internal air temperature sensor micro turbine is operating (if this is malfunctioning, the measurement could be incorrect).
Replace any faulty components.
- **NO** → **End of fault finding procedure.**

(A)

AFTER REPAIR	Check that the system is operating correctly.

ACREGX731.0

GETtheMANUALS.org

ALP 9 CONTINUED

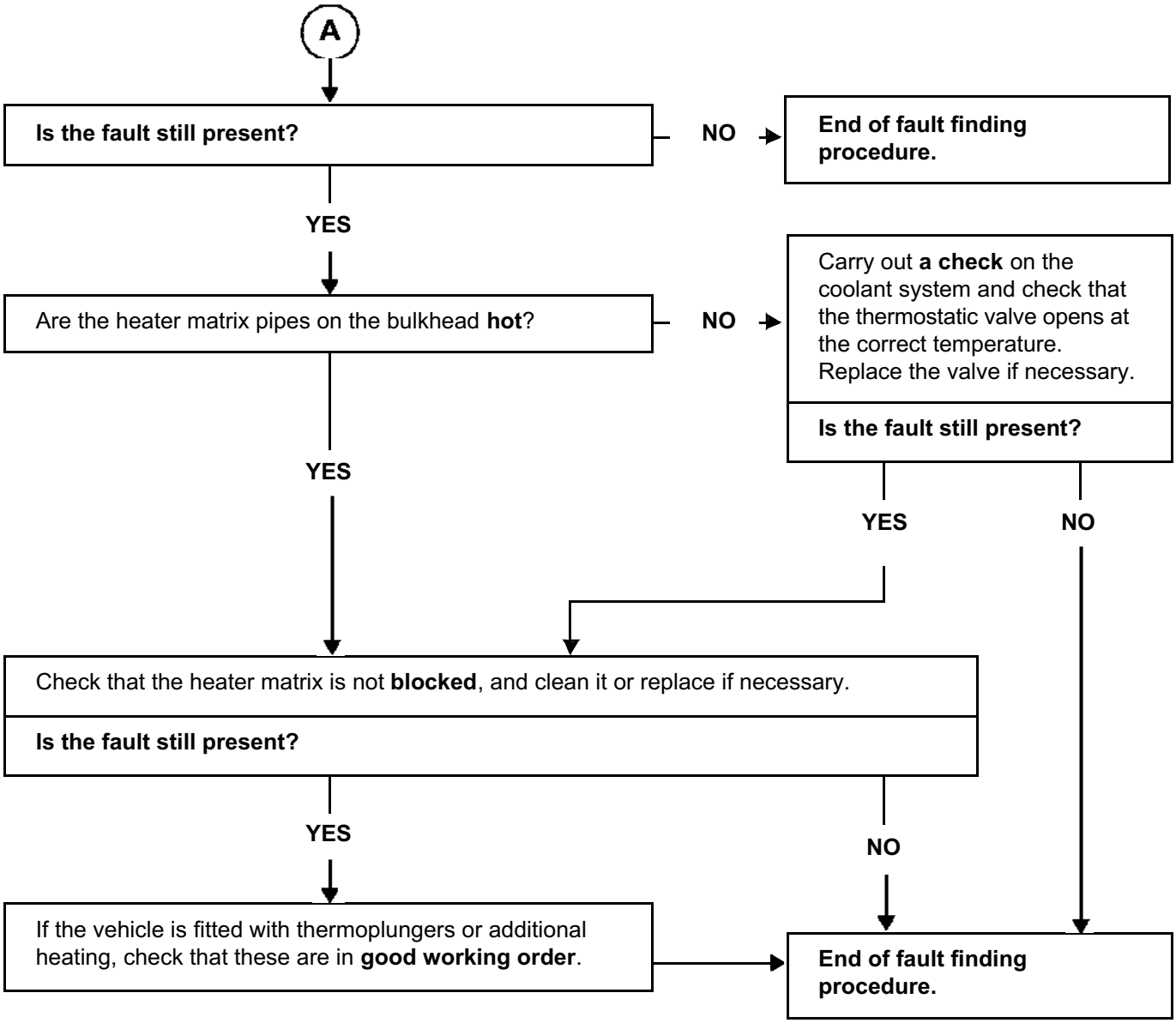

AFTER REPAIR	Check that the system is operating correctly.

ACREGX731.0

GETtheMANUALS.org

ALP 10	Too much hot air

NOTES	Only consult this customer complaint after a **complete check with the diagnostic tool**.

Is the **air flow** correct?

NO → See **ALP 2**, air flow fault.

YES

Is the **air distribution** correct?

NO → See **ALP 1**, air distribution fault.

YES

Using the diagnostic tool, check the air mixing control by checking the mixer motor parameters.
PR020 → Left-hand mixing flap position
PR021 → Right-hand mixing flap position

Do the flaps open fully?
(maximum hot position: 100% displayed on tool)

NO → Run **a conformity check** on the mixing motors.
In the event of a fault, refer to the Technical Note for fault finding procedures for mixing motors (**DF018** and **DF019**).

Is the fault still present?

YES → Run a **conformity check** as the fault may arise from a faulty signal from one of the sensors (temperature/humidity, etc).
Check that the internal air temperature sensor micro turbine is operating (if this is malfunctioning, the measurement could be incorrect).
Replace any faulty components.

→ (A)

NO → **End of fault finding procedure.**

AFTER REPAIR	Check that the system is operating correctly.

ACREGX731.0

GETtheMANUALS.org

ALP 10 CONTINUED	

(A)

Carry out **a check** on the coolant circuit and ensure that the thermostatic valve opens at the correct temperature.
Replace the valve if necessary

Is the fault still present?

YES

Using the **diagnostic tool**, check that the air recirculation flap is in the external air position by checking status **ET021 Air recirculation motor control**.
Repair if necessary (see **DF021 Air recirculation motor circuit**).

If the vehicle is fitted with thermoplungers or a self-contained heater (fuel heater), check that these are working correctly.

NO

End of fault finding procedure.

AFTER REPAIR	Check that the system is operating correctly.

ACREGX731.0

GETtheMANUALS.org

ALP 11	No cold air

NOTES	Only consult this customer complaint after a **complete check with the diagnostic tool**.

Start the engine and switch the air condition onto its coolest position while driving (minimum position left and right). Using **the diagnostic tool**, display status **ET140 Air conditioning request**. This status must be **ACTIVE**

Is the status ACTIVE?

NO → Run a **conformity check** and focus on the sensor temperature values (evaporator temperature, internal air temperature, etc.).

YES

Using **the diagnostic tool** and with the engine at idling speed, check that the injection computer authorises the air conditioning.
Status **ET003 AC inhibited by injection computer** should be **NO**.

Is the status NO?

NO → Carry out a **fault finding test on the injection** (faulty injection leading to a poor performance may prevent the air conditioning from working). Ensure that the engine cooling fan assembly is in correct working order.
Repair if necessary.

YES

Check **the condition** of the air conditioning compressor belt.
Replace it if necessary and check its **tension**.

Is the tension correct?

NO → **Tighten** the belt (see the repair procedures for engines without auto-tensioner).

YES

AFTER REPAIR	Check that the system is operating correctly.

ACREGX731.0

GETtheMANUALS.org

ALP 11
CONTINUED 1

(A)

Using the diagnostic tool, run command **AC021** Compressor clutch.

Does the compressor clutch jam?

YES →

NO

Check **for + 12 volts** on **track B** (**track 1** on V4Y) of the compressor clutch and on **track B** of the variable output solenoid valve (no electric solenoid valve on P9X and V4Y).
Repair if necessary.

Connect the bornier in place of the computer and check the **insulation, continuity and absence of interference resistance** of the following connections:
computer connector A **track 15** → **track A**of the compressor clutch(**track 2** on L7X).
computer connector A **track 7** → **track A** of the output control solenoid valve.
Repair if necessary.

Vary the position of the left and right mixer flaps from very cold to very hot (from minimum temperature position to maximum temperature position) and check subjectively whether there is a difference in temperature.

Can you feel the difference in temperature?

NO → Run **a conformity check** on the mixing motors.
In the event of a fault, refer to the Technical Note for fault finding procedures for mixing motors (**DF018** and **DF019**).

YES

(B)

AFTER REPAIR	Check that the system is operating correctly.

GETtheMANUALS.org

ALP 11
CONTINUED 2

B

Check the cold loop by checking the condition of the pipes and checking that the air conditioning system is not **leaking refrigerant** (carry out the check with the engine cold and then hot, using the electronic buzzer or a leak detecting product to avoid filling the air conditioning system twice in succession).
Repair if necessary.

Check the cleanliness of the condenser (presence of leaves, mud, etc.).
Clean the condenser if necessary.

With the air conditioning switched on (with the coldest setting selected), touch the refrigerant pipe between the pressure relief valve and the evaporator to make sure that it is **very cold**.

Is the refrigerant pipe cold?

NO → Check for the **pressure relief valve**.

Is the pressure relief valve present?

YES → **Replace the pressure relief valve.**

NO → **Replace the pipe** (between the condenser outlet and the evaporator inlet).

YES

Top up the refrigerant, referring to the Workshop Repair Manual (**650 gr ± 25 gr**).

Is the fault still present?

YES → Replace the compressor.

NO → **End of fault finding procedure.**

AFTER REPAIR — Check that the system is operating correctly.

ACREGX731.0

GETtheMANUALS.org

ALP 12	Too much cold air

NOTES	Only consult this customer complaint after a **complete check with the diagnostic tool**.

Start the engine and switch on the climate control: **Does the compressor operate?**

YES → **End of fault finding procedure.**

NO

Use the diagnostic tool to display the evaporator temperature (**PR 003**), with air conditioning switched on. Does the temperature drop below 0°C, which will disengage the compressor clutch?

YES → Does the compressor clutch disengage below **0°C**? (after a delay of one minute).

YES → **End of fault finding procedure.**

NO

If the compressor is not faulty and there are no mechanical faults on the compressor clutch, replace the air conditioning computer.

NO

Check that **the evaporator temperature sensor** is in the correct position (it is inserted approximately 20 mm into the evaporator air outlet).

Check **the resistance** of the evaporator sensor by measuring between **track 1** and **track 2** of the sensor. Replace the sensor if the resistance is not approximately: **30 KΩ** at **25°C**.

Is the fault still present?

NO → **End of fault finding procedure.**

A

AFTER REPAIR	Check that the system is operating correctly.

GETtheMANUALS.org

ALP 12 CONTINUED	

(A)

Run a **conformity check** as the fault may arise from a faulty signal from one of the sensors (temperature/ humidity, etc).
Check that the internal air temperature sensor micro turbine is operating (if this is malfunctioning, the measurement could be incorrect).
Replace any faulty components.

Using the diagnostic tool, check the air mixer control by checking the mixer motor parameters.
PR020 → Left-hand mixing flap position
PR021 → Right-hand mixing flap position

Is the mixing correct?
(0 % maximum cold, 100% maximum heat)

NO → Run **a conformity check** on the mixing motors.
In the event of a fault, refer to the Technical Note for fault finding procedures for mixing motors (**DF018** and **DF019**).

YES

Check the refrigerant level.

AFTER REPAIR	Check that the system is operating correctly.

ACREGX731.0

GETtheMANUALS.org

ALP 13	Unpleasant odours in the passenger compartment

NOTES	Only consult this customer complaint after a **complete check with the diagnostic tool**.

Ensure that the pollen filter is not blocked or worn.
Replace it if necessary.

Is the fault still present?

NO → **End of fault finding procedure.**

YES ↓

Ensure that **the evaporator outlet pipe** is not blocked.
Repair if necessary.

Is the fault still present?

NO → **End of fault finding procedure.**

YES ↓

Check that there are **no leaks on the heating unit** in relation to the engine compartment.
Repair if necessary.

Is the fault still present?

NO → **End of fault finding procedure.**

YES ↓

Place the vehicle on a lift.
Run an extension through the evaporator outlet pipe to apply the air conditioning freshener.
Spray the entire contents of the aerosol.
Leave the product to work for **15 minutes**.

AFTER REPAIR	Check that the system is operating correctly.

ACREGX731.0

GETtheMANUALS.org

ALP 14	Water is present in the passenger compartment

NOTES	Only consult this customer complaint after a **complete check with the diagnostic tool**.

Pressurise the cooling circuit.

Is there any coolant leaking into the vehicle?

YES → **Repair.**

NO

Ensure that **the evaporator outlet pipe** is not blocked.
Repair if necessary.

Is the fault still present?

NO → **End of fault finding procedure.**

YES

The fault may be caused by **ice** in the evaporator.
Does the customer complain of water droplets coming out of the air vents?

NO → The leak does not come from the heating and ventilation system.

YES

Use the diagnostic tool to display the evaporator temperature (**PR003**). Does it seem consistent? (in normal operation > **0˚C**, and the compressor is disengaged below this value after a delay of one minute).

YES → Run a **conformity check** as the fault may arise from a faulty signal from one of the sensors (temperature/humidity, etc.). Replace any faulty components.

NO

Check that **the evaporator temperature sensor** is in the correct position (it is inserted approximately 20 mm into the evaporator air outlet).

→ **End of fault finding procedure.**

AFTER REPAIR	Check that the system is operating correctly.

ACREGX731.0

GETtheMANUALS.org

ALP 15	No front control panel lighting

NOTES	Only consult this customer complaint after a complete check of the multiplex network and the air conditioning **with the diagnostic tool**.
	Special notes: The control panel is always lit but the buttons do not light up unless the side lights are operating, with or without contact. **Note:** If the display does not light up after 20 seconds there is a fault on the external temperature sensor.

Check the **connection and condition** of the computer output connectors.
Connect the bornier in place of the computer and check **the insulation, continuity and absence of interference resistance** of the connections:
computer connector A **track 14** → **track 2** of the lighting dimmer
earth → **track 3** of the lighting dimmer
Repair if necessary.

Is the fault still present?

NO → **End of fault finding procedure.**

YES

Check the **resistance** value of the dimmer by measuring between:
track 2 and **track 3** of the dimmer connector.
When the dimmer is operated, its resistance should vary between **0 to 1000 Ω ± 5%**.
Replace the dimmer if this is not the case.

Is the fault still present?

NO → **End of fault finding procedure.**

YES

* comp: computer

AFTER REPAIR	Check that the system is operating correctly.

ACREGX731.0

GETtheMANUALS.org

ALP 15 CONTINUED	

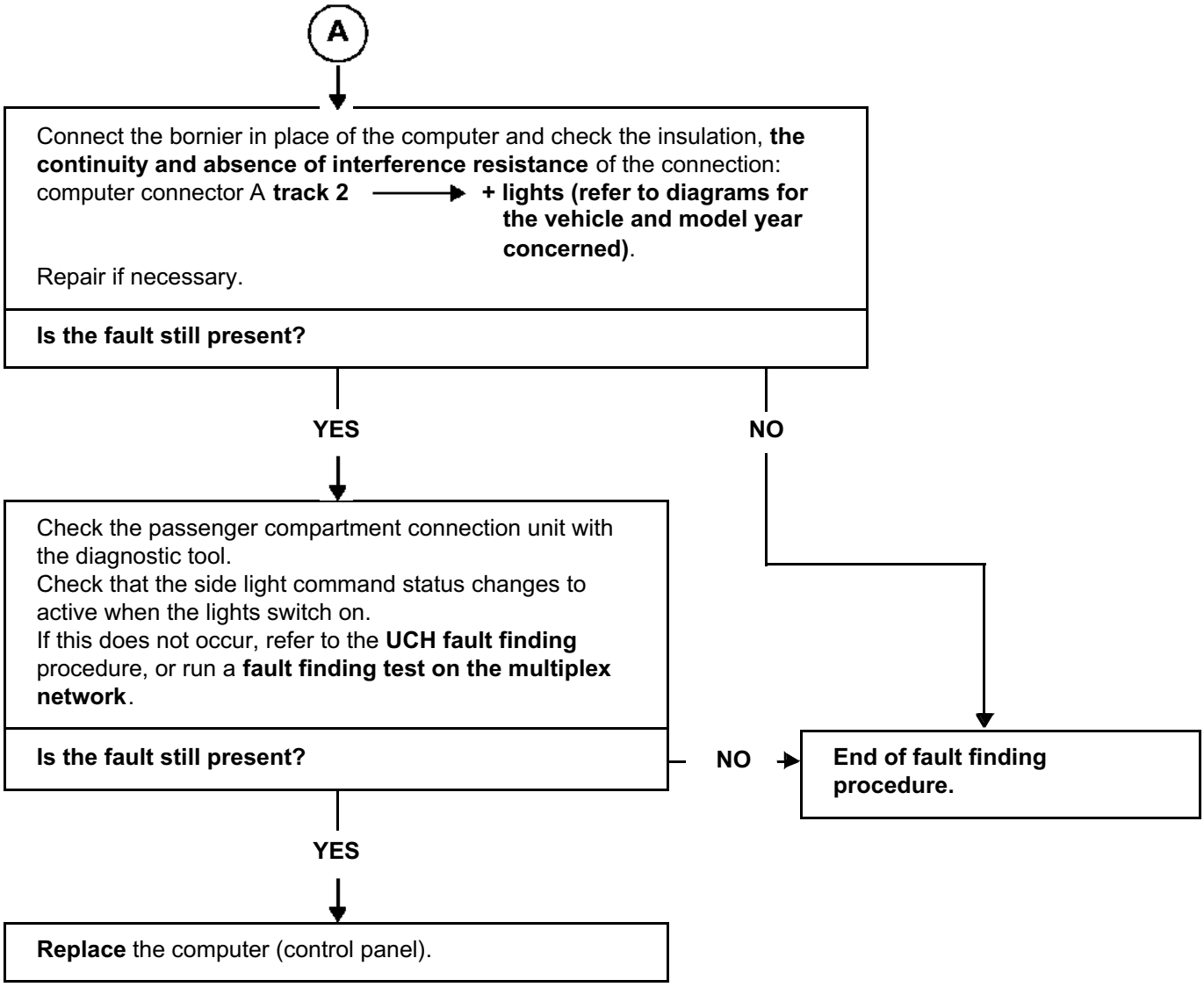

AFTER REPAIR	Check that the system is operating correctly.

ACREGX731.0

GETtheMANUALS.org

ALP 16	No rear control panel lighting

NOTES	**Special notes:** The control panel only lights up when the side lights are on.

Check the condition of the fuses.
Repair if necessary.

↓

Check the condition of the bulb.
Repair if necessary.

↓

Check the **connection and condition** of the rear fan assembly control unit connector.

Check **the insulation, continuity and absence of interference resistance** on the following connections:
track A3 of the control unit ⟶ UCH see diagrams of the vehicle concerned
track A2 of the control unit ⟶ **earth**
Repair if necessary.

↓

Check the 12 volt supply on track A3 of the rear fan assembly control unit.

Is there a supply? — **NO** → **End of fault finding procedure.**

↓ **NO**

Check the UCH.

↓

End of fault finding procedure.

AFTER REPAIR	Check that the system is operating correctly.

GETtheMANUALS.org

ALP 17	Noisy compressor

NOTES	Only consult this customer complaint after a complete check **with the diagnostic tool**.

Using the **diagnostic tool** configuration reading screen, check that **the drive ratio and the type of compressor are consistent with the vehicle equipment** by displaying the following information:
Information: **LC018** Drive ratio reading should indicate the type of engine fitted to the vehicle (the engine is associated with a drive ratio).
Information: **LC012** Compressor type should indicate the make of compressor fitted to the vehicle.
Reconfigure the climate control computer if necessary.

↓

Check that the **compressor belt is in good condition** and **check its tension** (for engines without automatic tensioner).
Replace the belt if necessary.

↓

Check that the compressor is **correctly positioned**.
Repair if necessary.

↓

Check the refrigerant fluid and look for leaks as the compressor may become noisy if it loses a significant volume of fluid.
Refill if necessary.

↓

For compressors fitted with an electric compressor output control valve (except V4Y and P9X engines), connect the bornier in place of the computer and check the **insulation, continuity and absence of interference resistance** on the connection:
computer connector A **track 7** ⟶ **track A** of the clutch solenoid valve
Repair if necessary.

↓

If the fault is still present, **replace** the air conditioning compressor.

AFTER REPAIR	Check that the system is operating correctly.

ACREGX731.0

GETtheMANUALS.org

VEL SATIS

6 Air conditioning

62B CLIMATE CONTROL

Program No.: 20
Vdiag No.: 09

Fault finding - Introduction	62B - 2
Fault finding - Allocation of computer tracks	62B - 7
Fault finding - Replacement of components	62B - 9
Fault finding - Configurations and programming	62B - 10
Fault finding - Fault summary table	62B - 11
Fault finding - Interpretation of faults	62B - 12
Fault finding - Conformity check	62B - 30
Fault finding - Status summary table	62B - 50
Fault finding - Interpretation of statuses	62B - 51
Fault finding - Parameter summary table	62B - 60
Fault finding - Interpretation of parameters	62B - 61
Fault finding - Help	62B - 67
Fault finding - Customer complaints	62B - 72
Fault finding charts (ALP)	62B - 73

V2 **Edition Anglaise**

"The repair procedures given by the manufacturer in this document are based on the technical specifications current when it was prepared.

The procedures may be modified as a result of changes introduced by the manufacturer in the production of the various component units and accessories from which his vehicles are constructed."

All rights reserved by Renault s.a.s.

Copying or translating, in part or in full, of this document or use of the service part reference numbering system is forbidden without the prior written authority of Renault s.a.s.

© Renault s.a.s. 2008

GETtheMANUALS.org

1. SCOPE OF THIS DOCUMENT

This document presents the fault finding procedure applicable to all computers with the following specifications:

Vehicle: Vel Satis Phase 1 and Phase 2 *Function concerned: Climate control*	*Computer name:* **Climate control** *Program No.: 20* *Vdiag No.:* **09**

2. PREREQUISITES FOR FAULT FINDING

Documentation type:

Fault finding procedures (this manual):
– Assisted fault finding (integrated into the **diagnostic tool**), Dialogys.
Wiring Diagrams:
– Visu-Schéma (CD-ROM), paper.

Type of diagnostic tools:

– **CLIP**

Special tooling required:

Special tooling required	
	Multimeter
Elé. 1681	Computer connection bornier

3. RECAP

Procedure

To save energy, the Vel Satis Phase 1 and Phase 2 UCH interrupts the + after ignition feed after **3 minutes** have elapsed.

To run fault finding on a computer, it is possible to force the + after ignition feed on for **1 hour** by applying the following procedure:
– Press the card unlocking button,
– insert the card in the reader,
– press the Start button (interrupting the timed + after ignition feed mode),
– press and hold the start button for over **5 seconds** until the engine immobiliser warning light starts to flash rapidly (4 Hz).

This forced + after ignition feed mode remains on for **1 hour**.

Pressing the start button or removing the card from the card reader cuts off the forced + after ignition feed, but does not interrupt the forced + after ignition feed mode timing. As long as the full time has not elapsed, switching on the + after ignition feed reactivates the forced + after ignition feed for the remaining time.

GETtheMANUALS.org

Faults

Faults are declared as either present or stored (depending on whether they appeared in a certain context and have disappeared since, or whether they remain present but have not been diagnosed within the current context).

The **present** or **stored** status of faults should be taken into consideration when the diagnostic tool is switched on after the + after ignition feed (without any system components being active).

For a **present fault**, apply the procedure described in the **Interpretation of faults** section.

For a **stored fault**, note the faults displayed and apply the instructions in the **Notes** section.

If the fault is **confirmed** when the instructions in the Notes section are applied, the fault is present. Deal with the fault

If the fault is **not confirmed**, check:
- the electrical lines which correspond to the fault,
- the connectors on these lines (corrosion, bent pins, etc.),
- the resistance of the component detected as faulty,
- the condition of the wires (melted or split insulation, wear).

Conformity check

The aim of the conformity check is to check data that does not produce a fault on the diagnostic tool because the data is inconsistent. Therefore, this stage is used to:
- carry out fault finding on faults that do not have a fault display, and which may correspond to a customer complaint.
- check that the system is operating correctly and that there is no risk of a fault recurring after repairs.

This section gives the fault finding procedures for statuses and parameters and the conditions for checking them.

If a status is not behaving normally or a parameter is outside the permitted tolerance values, consult the corresponding fault finding page.

Customer complaints - Fault finding chart

If the test with the diagnostic tool is OK but the customer complaint is still present, the fault should be processed by **customer complaint**.

A synopsis of the general procedure to follow is provided on the following page in the form of a flow chart.

GETtheMANUALS.org

4. FAULT FINDING PROCEDURE

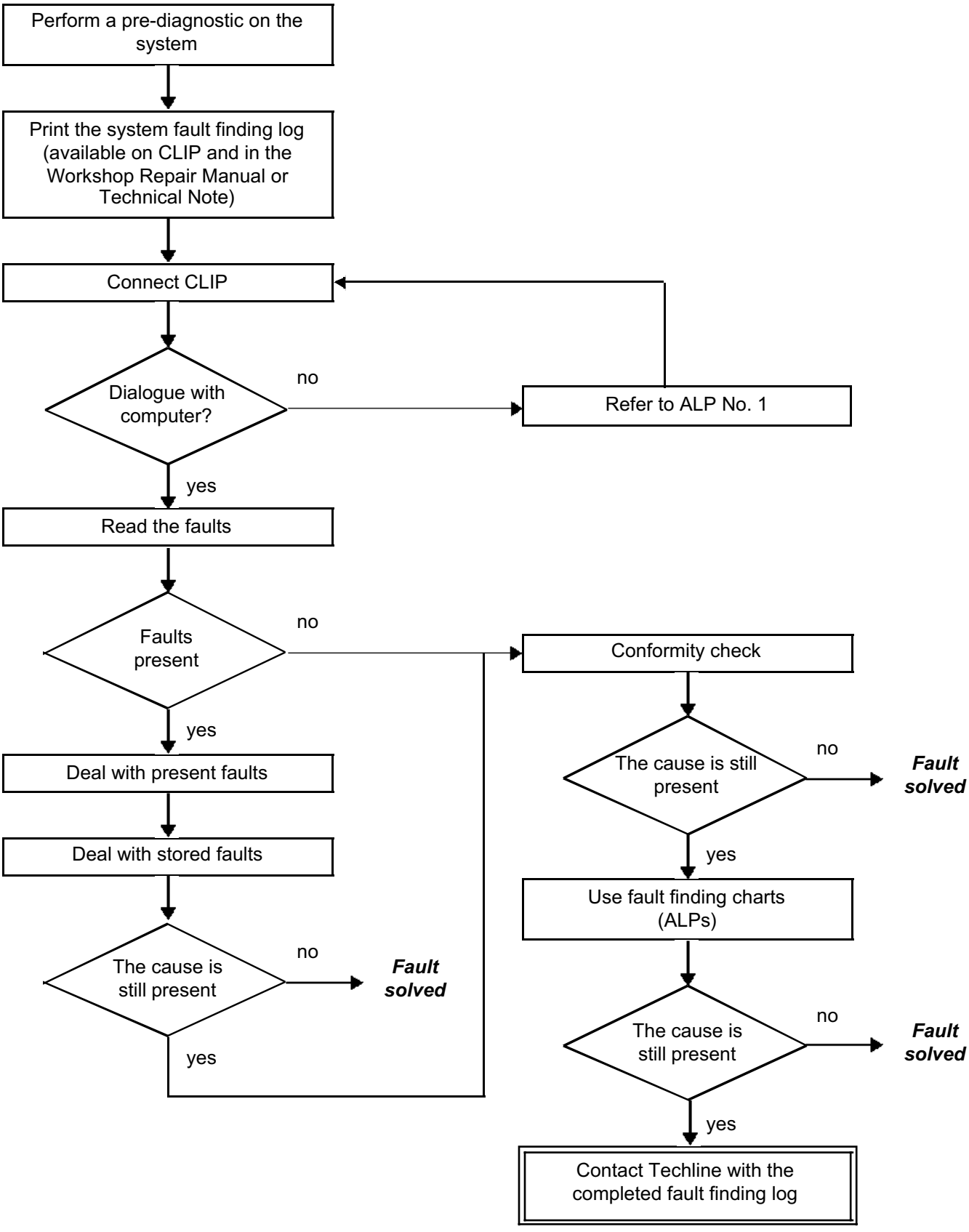

GETtheMANUALS.org

4. FAULT FINDING PROCEDURE (continued)

Wiring check

Fault finding problems
Disconnecting the connectors and/or manipulating the wiring harness may temporarily remove the cause of a fault.
Electrical voltage, resistance and insulation measurements are generally correct, especially if the fault is not present when the analysis is made (stored fault).

Visual inspection
Look for damage under the bonnet and in the passenger compartment.
Carefully check the fuses, insulators and wiring harness routing.
Look for signs of oxidation.

Tactile inspection
While manipulating the wiring harness, use the diagnostic tool to note any change in fault status from stored to present.
Make sure that the connectors are properly locked.
Apply light pressure to the connectors.
Twist the wiring harness.
If there is a change in status, try to locate the source of the fault.

Inspection of each component
Disconnect the connectors and check the appearance of the clips and tabs, as well as the crimping (no crimping on the insulating section).
Make sure that the clips and tabs are properly locked in the sockets.
Check that no clips or tabs have been dislodged during connection.
Check the clip contact pressure using an appropriate model of tab.

Continuity and insulation check
Check the continuity of entire lines, then section by section.
Look for a short circuit to earth, to **+ 12 V** or to another wire.

If a fault is detected, repair or replace the wiring harness.

GETtheMANUALS.org

5. FAULT FINDING LOG

IMPORTANT

IMPORTANT
Any fault on a complex system requires a full fault finding procedure with the appropriate tools. The FAULT FINDING LOG, which should be completed during the procedure, enables you to keep track of the procedure which is carried out. It is an essential document when consulting the manufacturer.

IT IS THEREFORE MANDATORY TO FILL OUT A FAULT FINDING LOG EACH TIME FAULT FINDING IS CARRIED OUT.

You will always be asked for this log:

- when requesting technical assistance from Techline,
- for approval requests when replacing parts for which approval is mandatory,
- to be attached to monitored parts for which reimbursement is requested. The log is needed for warranty reimbursement, and enables better analysis of the parts removed.

6. SAFETY ADVICE

Safety rules must be observed during any work on a component to prevent any damage or injury:

– check the battery voltage to avoid incorrect operation of computer functions,
– Use the proper tools.

GETtheMANUALS.org

CLIMATE CONTROL computer 30-track connector A

Computer track	Description
1	0 Volts
2	+ 12 V SIDE LIGHTS FEED
3	Cold loop pressure sensor signal
4	**Electrical windscreen command**
5	Diagnostic line K
6	**+ 12 V** after ignition feed
7	**Controlled capacity command**
8	0 V cold loop pressure signal
9	**CAN L**
10	Multiplex line H
11	**Cold loop pressure sensor feed**
12	Heated rear window control
13	Blower speed feedback signal
14	**0 V dimmer controlled**
15	Clutch compressor control
16	0 Volts
17	Power-Relay (engine running)
18	+ 12 Volts electronic BATT feed
19	Solar radiation sensor signal
20	Rear blower signal
21	+ 12 V side lights feed
22	Humidity sensor signal
23	Not used
24	Not used
25	Not used
26	0 V from humidity/temperature/solar radiation sensors
27	Blower speed setting
28	LED lighting command output
29	Interior temperature sensor signal
30	0 Volts

GETtheMANUALS.org

CLIMATE CONTROL computer 30-track B connector (tracks 1 to 14 are not used)

Computer track	Description
15	0 V evaporator sensor
16	Toxicity sensor feed
17	Toxicity sensor signal - NOX
18	Toxicity sensor signal - COX
19	0 V toxicity sensor
20	De-icing distribution actuator a
21	De-icing distribution actuator b
22	Left-hand mixing motor actuator a
23	Left-hand mixing motor actuator b
24	Footwell/ventilation distribution actuator a
25	Footwell/ventilation distribution actuator b
26	Right-hand mixing motor actuator a
27	Right-hand mixing motor actuator b
28	Evaporator sensor signal
29	Recirculation actuator a
30	Recirculation actuator b

New CLIMATE CONTROL Redesign 2005 computer 15-track connector B

Computer track	Description
1	Toxicity sensor feed
2	Toxicity sensor signal - NOX
3	Toxicity sensor signal - COX
4	0 V toxicity sensor
5	0 V evaporator sensor
6	Not used
7	Left-hand mixing motor actuator a
8	Left-hand mixing motor actuator b
9	Footwell/ventilation distribution actuator a
10	Footwell/ventilation distribution actuator b
11	Right-hand mixing motor actuator a
12	Right-hand mixing motor actuator b
13	Evaporator sensor signal
14	Recirculation actuator a
15	Recirculation actuator b

GETtheMANUALS.org

REPLACING THE CLIMATE CONTROL COMPUTER:

WARNING
Before replacing the climate control computer, check that it is faulty (read faults, conformity of variables, read customer complaints). Techline will authorise replacement of the computer after completion of a fault finding log (available in this manual and the diagnostic tool).

– Note the computer configuration according to the optional equipment fitted on the vehicle.
– Ensure that the ignition is switched off.
– After approval from the **Techline,** replace the computer.
– Switch on the ignition and carry out a check using the diagnostic tool.
– Configure the computer according to the vehicle specifications.
– Switch off the ignition and then back on for the configurations to register.
– Go to the Read configuration menu and confirm that the configurations have been stored.
– Check for faults and carry out the fault finding procedure corresponding to the possible faults shown on the diagnostic tool.
– Clear any stored faults.
– Start the engine, switch on the air conditioning and ensure that it is working correctly.

GETtheMANUALS.org

CLIMATE CONTROL COMPUTER CONFIGURATION: The climate control computer has several configurations. These configurations need to be set after replacing the computer.
These configurations are important as they ensure optimal air conditioning inside the vehicle (improved control of the climate control). If they are not entered correctly, cold air and warm air production will be severely affected.
Take configuration readings to ensure that the configurations have taken effect.

CONFIGURATION		CONFIGURATION READING	
CF044	VEHICLE TYPE	**LC013**	VEHICLE TYPE
CF111	TYPE OF POWER ASSISTED STEERING	**LC037**	TYPE OF POWER ASSISTED STEERING
CF112	EVAPORATOR TEMPERATURE SENSOR	**LC038**	EVAPORATOR TEMPERATURE SENSOR
CF050	ELECTRIC HEATED WINDSCREEN	**LC005**	ELECTRIC HEATED WINDSCREEN
CF076	Type of compressor	**LC012**	Type of compressor
CF110	DRIVE RATIO	**LC036**	DRIVE RATIO
		LC025	ENGINE MODEL
		LC045	COOLING FAN UNIT SIGNAL THROUGH INJECTION

GETtheMANUALS.org

Tool fault	Diagnostic tool title
DF001	Computer
DF002	Refrigerant pressure sensor circuit
DF007	Solar radiation sensor circuit
DF018	Right-hand mixing motor circuit
DF019	Left-hand mixing motor circuit
DF020	Evaporator temperature sensor circuit
DF021	Air recirculation motor circuit
DF026	Solar radiation sensor circuit
DF027	Humidity sensor circuit
DF028	Footwell/ventilation distribution motor circuit
DF030	Compressor output control circuit
DF033	Refrigerant charge
DF043	Multiplex network
DF082	Passenger compartment ventilation motor circuit
DF090	Compressor control
DF092	No injection multiplex signal
DF093	No UCH multiplex signal
DF094	No ABS system multiplex signal

GETtheMANUALS.org

DF001 PRESENT	COMPUTER

NOTES	None.

Check **the connection and condition** of the climate control control panel connectors.
Repair if necessary.

Connect the universal bornier in place of the computer and check the **insulation, continuity and the absence of interference resistance** on the following connections:

- computer connector A **track 1** → **earth**
- computer connector A **track 16** → **earth**
- computer connector A **track 30** → **earth**
- computer connector A **track 6** → **+ after ignition feed**
- computer connector A **track 18** → **+ after ignition feed**

Repair if necessary.

If the fault is still present, **replace the control panel** for the climate control system (before carrying out the replacement, record the configuration to program the new computer).

AFTER REPAIR	Reconfigure the computer (see the help section). Clear the stored faults. Deal with any other faults.

GETtheMANUALS.org

DF002 PRESENT	REFRIGERANT PRESSURE SENSOR CIRCUIT CO : open circuit CC : short circuit

NOTES	**Special notes:** The air conditioning compressor disengages if the condenser outlet pressure is below 2 bar or above 27 bar (relative).

Check the **connection and condition** of the refrigerant pressure sensor connector.
Replace the connector if necessary.

use the universal bornier to check the **insulation, continuity and the absence of interference resistance** on the following connections:

computer connector A **track 8** ⟶ **track A** of the pressure sensor
computer connector A **track 11** ⟶ **track B** of the pressure sensor
computer connector A **track 3** ⟶ **track C** of the pressure sensor

Repair if necessary.

With the ignition switched on, check that the sensor is correctly supplied by the computer by measuring between: **track A** and **track B** of the sensor.
If there is no **5 V**, replace the climate control computer.

If the fault is still present, **replace** the pressure sensor.

AFTER REPAIR	Clear the stored faults. Deal with any other faults.

GETtheMANUALS.org

DF007 PRESENT	INTERIOR TEMPERATURE SENSOR CIRCUIT CO : open circuit CC : short circuit

NOTES	**Special notes:** The interior temperature sensor is attached to a printed circuit with the humidity sensor. This component is located in the fixed casing below the interior rear-view mirror.

Check **the connection and condition** of the interior temperature sensor connector. Replace the connector if necessary.
With the ignition on, check that the temperature sensor fan **is operating correctly**. If it is not working, check for **+12 V** on **track 1** of the temperature sensor connector and **earth** on **track 3**. If the fan feed is correct and the fault is still present, replace the **sensors/fan** (the fan is not available separately).
Connect the universal bornier in place of the computer and check the **insulation, continuity and the absence of interference resistance** of the following connections: computer connector A **track 29** ⟶ **track 4** of the temperature sensor computer connector A **track 26** ⟶ **track 5** of the temperature sensor Repair if necessary.
Check **the resistance value** of the sensor across: **Track 4** and **track 5** of the internal temperature sensor connector and replace the sensor if the resistance is not approximately: **10 kΩ at 25°C**.
If the fault is still present, **replace** the internal temperature sensor.

AFTER REPAIR	Clear the stored faults. Deal with any other faults.

GETtheMANUALS.org

DF018 PRESENT OR STORED	RIGHT-HAND MIXING MOTOR CIRCUIT

NOTES	**Conditions for applying the fault finding procedure to stored faults:** The fault is declared present after the air conditioning has been switched on and the right-hand temperature control has been operated.
	Special notes: The dashboard must be removed to allow access to check the mixer motor.

Connect the universal bornier in place of the computer and check the **resistance value** of the motor as well as the **insulation against earth and against + 12 V** of the connections between:
Track 26 and **track 27** of computer connector B or **tracks 11** and **12** of the new 2005 computer connector B.
The motor should have a resistance of approximately: **36** Ω at 20˚C.

If the value is incorrect, or if the fault is still present due to a poor or loose connection: **remove the dashboard** to gain access to the right-hand mixing motor.

Check **the connection and condition of the** right-hand mixing motor.
Replace the connector if necessary.

Check that the mixing motor flap is not **jammed**.
Repair if necessary.

Connect the universal bornier in place of the computer and check the **insulation, continuity and the absence of interference resistance** of the following connections:

computer connector B **track 26** ⟶ **track 5** of the right-hand mixing motor
computer connector B **track 27** ⟶ **track 6** of the right-hand mixing motor

or:

computer connector B **track 11** ⟶ **track 5** of the right-hand mixing motor
computer connector B **track 12** ⟶ **track 6** of the right-hand mixing motor

For the new redesign 2005 computer.
Repair if necessary.

Check the resistance value of the right-hand mixing motor by measuring between:
track 5 and **track 6** of the mixing motor connector; replace the motor if the resistance is not approximately: **36** Ω at 20˚C.

If the fault is still present, **replace** the right-hand mixing motor.

AFTER REPAIR	Follow the instructions to confirm repair. Clear the stored faults. Deal with any other faults.

GETtheMANUALS.org

DF019 PRESENT OR STORED	LEFT-HAND MIXING MOTOR CIRCUIT

NOTES	**Conditions for applying the fault finding procedure to stored faults:** The fault is declared present after the climate control system has been switched on and the left-hand side temperature control has been operated.
	Special notes: The dashboard must be removed to allow access to check the mixer motor.

Connect the universal bornier in place of the computer and check the **resistance value** of the motor as well as the **insulation against earth and against + 12 V** of the connections between:
Track 22 and **track 23** of computer connector B or **tracks 7** and **8** of the new 2005 redesign computer connector B.
The motor should have a resistance of approximately: **36** Ω at 20˚C.

If the value is incorrect, or if the fault is still present due to a poor or loose connection: **remove the dashboard** to gain access to the left-hand mixing motor.

Check **the connection and condition of the** left-hand mixing motor.
Replace the connector if necessary.

Check that the mixing motor flap is not **jammed**.
Repair if necessary.

Connect the universal bornier in place of the computer and check the **insulation, continuity and the absence of interference resistance** of the following connections:

computer connector B **track 22** ⟶ **track 5** of the left-hand mixing motor
computer connector B **track 23** ⟶ **track 6** of the left-hand mixing motor

or:

computer connector B **track 7** ⟶ **track 5** of the left-hand mixing motor
computer connector B **track 8** ⟶ **track 6** of the left-hand mixing motor

For the new redesign 2005 computer.
Repair if necessary.

Check the resistance value of the left-hand mixing motor by measuring between:
track 5 and **track 6** of the mixing motor connector; replace the motor if the resistance is not approximately: **36 Ω** at 20˚C.

If the fault is still present, **replace** the left-hand mixing motor.

AFTER REPAIR	Follow the instructions to confirm repair. Clear the stored faults. Deal with any other faults.

GETtheMANUALS.org

DF020 PRESENT	EVAPORATOR TEMPERATURE SENSOR CIRCUIT CO : open circuit CC : short circuit

NOTES	None.

Check **the connection and condition** of the evaporator temperature sensor connector.
Replace the connector if necessary.

Connect the universal bornier in place of the computer and check the **insulation, continuity and the absence of interference resistance** of the following connections:

computer connector B **track 28** → **track 1** of the temperature sensor
computer connector B **track 15** → **track 2** of the temperature sensor

or:

computer connector B **track 13** → **track 1** of the temperature sensor
computer connector B **track 5** → **track 2** of the temperature sensor

For the new redesign 2005 computer.
Repair if necessary.

Check the resistance value of the evaporator temperature sensor by measuring between:
track 1 and **track 2** of the evaporator temperature sensor connector and replace the sensor if the resistance is not approximately: **30 kΩ** at 25˚C.

If the fault is still present, **replace** the evaporator temperature sensor.

AFTER REPAIR	Clear the stored faults. Deal with any other faults.

GETtheMANUALS.org

DF021 PRESENT OR STORED	RECIRCULATION MOTOR CIRCUIT

NOTES	**Conditions for applying the fault finding procedure to stored faults:** The fault is declared present after the climate control system has been switched on and the recirculation control has been operated. **Special notes:** The air recirculation motor is located beneath the particle filter and the base of the glove compartment must be removed to gain access to it.

Check **the connection and condition** of the air recirculation motor.
Replace the connector if necessary.

Check that the recirculation motor flap is not **jammed**.
Repair if necessary.

Connect the universal bornier in place of the computer and check the **insulation, continuity and the absence of interference resistance** of the following connections:

computer connector B **track 29** → **track A** of the air recirculation motor
computer connector B **track 30** → **track B** of the air recirculation motor

or:

computer connector B **track 14** → **track A** of the air recirculation motor
computer connector B **track 15** → **track B** of the air recirculation motor

For the new redesign 2005 computer.
Repair if necessary.

Check the resistance value of the recirculation motor by measuring between:
track A and **track B** of the recirculation motor connector and replace the motor if the resistance is not approximately: **36** Ω at 20˚C.

If the fault is still present, **replace** the recirculation motor.

AFTER REPAIR	Follow the instructions to confirm repair. Clear the stored faults. Deal with any other faults.

GETtheMANUALS.org

DF026 PRESENT	SOLAR RADIATION SENSOR CIRCUIT CO : open circuit CC : short circuit

NOTES	**Special notes:** The sunlight sensor (a little black button) is located on top of the instrument panel, on the windscreen side.

Check that the solar radiation sensor is not hidden under something (nothing should be placed on top of the sensor).
Check **the connection and condition of the** solar radiation sensor connector. Replace the connector if necessary.
Connect the universal bornier in place of the computer and check the **insulation, continuity and the absence of interference resistance** of the following connections: computer connector A **track 26** ⟶ **track 1** of the solar radiation sensor computer connector A **track 19** ⟶ **track 2** of the solar radiation sensor Repair if necessary.
If the fault is still present, **replace** the solar radiation sensor.

AFTER REPAIR	Clear the stored faults. Deal with any other faults.

GETtheMANUALS.org

DF027 PRESENT	HUMIDITY SENSOR CIRCUIT

NOTES	**Special notes:** The humidity sensor is attached to a printed circuit with the interior temperature sensor. This component is located in the fixed casing below the interior rear-view mirror.

Check **the connection and condition** of the humidity sensor connector.
Replace the connector if necessary.

With the ignition on, check that the humidity sensor fan **is operating correctly**.
If not, check for **+12 V** on **track 1** of the humidity sensor connector and an **earth** on **track 3**.
If the fan supply is correct and the fault is still present, replace the **sensors/fan** (the fan is not available separately).

Connect the universal bornier in place of the computer and check the **insulation, continuity and the absence of interference resistance** of the following connections:
computer connector A **track 26** ⟶ **track 5** of the humidity sensor
computer connector A **track 22** ⟶ **track 6** of the humidity sensor
Repair if necessary.

If the fault is still present, **replace** the humidity sensor.

AFTER REPAIR	Clear the stored faults. Deal with any other faults.

GETtheMANUALS.org

DF028 PRESENT OR STORED	FOOTWELL/VENTILATION DISTRIBUTION MOTOR CIRCUIT

NOTES	**Conditions for applying the fault finding procedure to stored faults:** The fault is declared present after the climate control has been activated and the air distribution control has been operated.

Connect the universal bornier in place of the computer and check the **resistance value** of the motor as well as the **insulation against earth and against + 12 V** of the connections between:
Track 24 and **track 25** of computer connector B or **tracks 9** and **10** of the new 2005 computer connector B.
The motor should have a resistance of approximately: **36** Ω at 20˚C.

If the value is incorrect, or if the fault is still present due to a poor or loose connection: **remove the dashboard** to gain access to the footwell/ventilation distribution motor.

Check **the connection and condition** of the footwell distribution motor connector.
Replace the connector if necessary.

Check that the distribution motor flap is not **jammed**.
Repair if necessary.

Connect the universal bornier in place of the computer and check the **insulation, continuity and the absence of interference resistance** of the following connections:

computer connector B **track 24** → **track A** of the footwell distribution motor
computer connector B **track 25** → **track B** of the footwell distribution motor

or:

computer connector B **track 9** → **track A** of the footwell distribution motor
computer connector B **track 10** → **track B** of the footwell distribution motor

For the new redesign 2005 computer.
Repair if necessary.

Check the resistance value of the distribution motor by measuring between:
track A and **track B** of the distribution motor connector and replace the motor if the resistance is not approximately: **36** Ω at 20˚C.

If the fault is still present, **replace** the footwell distribution motor.

AFTER REPAIR	Follow the instructions to confirm repair. Clear the stored faults. Deal with any other faults.

GETtheMANUALS.org

DF030 PRESENT	COMPRESSOR OUTPUT CONTROL CIRCUIT CO : open circuit CC : short circuit

NOTES	**Special notes:** The capacity of the compressor is electrically controlled by a control valve on the F4R, G9T, and M9R engines. V4Y and P9X engines are not fitted with this valve, the capacity is pneumatically controlled (CALSONIC V6 and Denso 7SBU16 compressors). This fault finding procedure **can therefore not be carried out on vehicles fitted with** V4Y and P9X engines.

Check **the connection and condition** of the compressor capacity control connector. Repair if necessary.
With the ignition on, check for **+ 12 V** on **track B** of the compressor output control connector. Repair if necessary.
Connect the universal bornier in place of the computer and check the **insulation, continuity and the absence of interference resistance** on the following connection: Computer connector A **track 7** ⟶ Output control solenoid valve **track A** Repair if necessary.
Measure the resistance between: **track A** and **track B** of the compressor output control solenoid valve; replace the compressor if the resistance is not approximately: **18.5 Ω** ± 0.5% at 25˚C.
If the fault is still present, the climate control computer may be damaged, contact Techline.

AFTER REPAIR	Clear the stored faults. Deal with any other faults.

GETtheMANUALS.org

DF033 PRESENT OR STORED	REFRIGERANT FLUID CHARGE

NOTES	**Conditions for applying the fault finding procedure to stored faults:** Once the fault is stored, it is difficult to reproduce (**6** consecutive journeys required); the fault finding procedure should be applied even if the fault is only stored.
	Special notes: The refrigerant fill is measured following road tests at 54 mph (90 km/h) (maximum capacity). The fault will be confirmed after the 6th test, if the above conditions are observed. This fault only concerns compressors with electrical capacity control. In vehicles with pneumatically controlled compressors, the compressor compensates for the loss of refrigerant by reducing its capacity. Consequently, the air conditioning becomes less efficient.
	Priorities when dealing with a number of faults: – Deal with fault **DF002 REFRIGERANT PRESSURE SENSOR CIRCUIT** first, if it is present or stored.

Then check for refrigerant leaks. Repair if necessary.
Check the **level of refrigerant** (for reference, the amount of refrigerant to use is 650 g ± 25 g).
Clear the refrigerant charge fault before starting the engine and carrying out any tests.

AFTER REPAIR	Clear the stored faults. Deal with any other faults.

GETtheMANUALS.org

DF043 PRESENT	MULTIPLEX NETWORK DEF : apply the multiplex network fault finding procedure 1.DEF: apply the multiplex network fault finding procedure

NOTES	None.

Check **the connection and condition** of the climate control control panel connectors.
Repair if necessary.

Connect the universal bornier in place of the computer and check the **insulation, continuity and the absence of interference resistance** of the following connections:

computer connector A **track 9** ⟶ **track CAN L** of the UCH
computer connector A **track 10** ⟶ **track CAN H** of the UCH
(refer to diagrams for the vehicle and model year concerned).

Repair if necessary.

If the fault is still present, **carry out fault finding** on the multiplex network.

AFTER REPAIR	Clear the stored faults. Deal with any other faults.

GETtheMANUALS.org

DF082 PRESENT OR STORED	PASSENGER COMPARTMENT BLOWER MOTOR CIRCUIT

NOTES	**Conditions for applying the fault finding procedure to stored faults:** The fault is declared present after: the ventilation is switched on.
	Special notes: An open circuit on track 27 (passenger compartment fan unit power module control) will not be detected by the diagnostic tool but will result in customer complaints (**ALP 6** and **ALP 9**) as the passenger compartment climate control will no longer work.

Check **the connection and condition** of the black 2 ∞ 5-track connector bolted underneath the glove compartment as well as **the connection and condition** of the following three connectors:
– the blue 2-track connector and the black 4-track connector of the fan unit power module.
– the black 2-track connector of the fan.
Repair if necessary.

With the ignition on, check for **+12 V** on **track B5** and an earth on **track B4** of the black 2 x 5-track connector of the passenger compartment fan unit.

Connect the universal bornier in place of the computer and check the **insulation, continuity and the absence of interference resistance** of the following connections:
computer connector A **track 13** ⟶ **track A2** of the power module
computer connector A **track 27** ⟶ **track A3** of the power module
Repair if necessary (refer to the diagram in the HELP section).

Disconnect the black 2-track blower connector and **measure the resistance** of the blower between track A and track B.
Replace the fan if its resistance is zero or infinite.

If the fault is still present, **replace** the fan unit power module.

AFTER REPAIR	Clear the stored faults. Follow the instructions to confirm repair. Deal with any other faults.

GETtheMANUALS.org

DF090 PRESENT	COMPRESSOR CONTROL CO : open circuit CC : short circuit

NOTES	**Conditions for applying the fault finding procedure to stored faults:** The fault is declared present after the ventilation is switched on.

Check **the connection and condition** of the compressor clutch connector. Repair if necessary.
With the ignition on, check for **+ 12 V** on **track B** of the compressor clutch connector.
Connect the universal bornier in place of the computer and check the **insulation, continuity and the absence of interference resistance** on the following connection: computer connector A **track 15** ⟶ **track A** of the compressor clutch Repair if necessary.
Measure the resistance between: **track A** and **track B** of the compressor clutch and replace the compressor if the resistance is not between 3 and 4 Ω.

AFTER REPAIR	Clear the stored faults. Deal with any other faults.

GETtheMANUALS.org

DF092 PRESENT	INJECTION MULTIPLEX SIGNAL ABSENT DEF : apply the multiplex network fault finding procedure 1.DEF: apply the multiplex network fault finding procedure

NOTES	None.

Check **the connection and condition** of the climate control control panel connectors.
Repair if necessary.

Connect the universal bornier in place of the computer and check the **insulation, continuity and the absence of interference resistance** on the following connections:

computer connector A **track 9** → **track CAN L** of the injection computer
computer connector A **track 10** → **track CAN H** of the injection computer
(refer to diagrams for the vehicle and model year in question).

Repair if necessary.

If the fault is still present, **perform fault finding** on the multiplex network and the injection system.

AFTER REPAIR	Clear the stored faults. Deal with any other faults.

GETtheMANUALS.org

DF093 PRESENT	NO UCH MULTIPLEX SIGNAL DEF : apply the multiplex network fault finding procedure 1.DEF: apply the multiplex network fault finding procedure

NOTES	None.

Check **the connection and condition** of the air conditioning control panel connectors.
Repair if necessary.

Connect the universal bornier in place of the computer and check the **insulation, continuity and the absence of interference resistance** on the following connections:

computer connector A **track 9** → **track CAN L** of the UCH
computer connector A **track 10** → **track CAN H** of the UCH
(refer to diagrams for the vehicle and model year in question).

Repair if necessary.

If the fault is still present, **carry out fault finding** on the multiplex network.

AFTER REPAIR	Clear the stored faults. Deal with any other faults.

GETtheMANUALS.org

DF094 PRESENT	NO ABS MULTIPLEX SIGNAL DEF : apply the multiplex network fault finding procedure 1.DEF: apply the multiplex network fault finding procedure

NOTES	None.

Check **the connection and condition** of the air conditioning control panel connectors.
Repair if necessary.

Connect the universal bornier in place of the computer and check the **insulation, continuity and the absence of interference resistance** of the following connections:

computer connector A **track 9** → **track CAN L** of the ABS computer
computer connector A **track 10** → **track CAN H** of the ABS computer
(refer to diagrams for the vehicle and model year in question).

Repair if necessary.

If the fault is still present, **carry out fault finding** on the multiplex network.

AFTER REPAIR	Clear the stored faults. Deal with any other faults.

GETtheMANUALS.org

NOTES	Only carry out this conformity check after a **full check** with the diagnostic tool (the values shown in this conformity check are given as a guide only). **Test conditions:** engine off, ignition on, **climate control switched off**.

Main screen

Order	Function	Parameter or Status checked or Action		Display and Notes	Fault finding
1	Air conditioning	**ET001:**	+ 12 V accessories feed	**PRESENT**	None
2		**ET007:**	Computer + after ignition feed	**PRESENT**	Check the **insulation, continuity and absence of interference resistance** on the computer earths and feeds:
3		**ET034:**	+ 12 V battery feed	**PRESENT**	**None.**
4		**ET035:**	heated rear screen through injection	NO	**This status is only for the Particle Filter (FAP) function.**
5		**ET036:**	with the engine running	NO	**None.**
6		**PR014:**	computer feed voltage	11 V < PR014 < 15 V	**None.**
7		**PR015:**	Engine speed	0 rpm	**None.**
8		**PR095:**	Vehicle speed	0 mph or km/h	**None.**

GETtheMANUALS.org

NOTES	Only carry out this conformity check after a **full check** with the diagnostic tool (the values shown in this conformity check are given as a guide only). **Test conditions:** engine off, ignition on, **climate control switched off**.

Function: Air conditioning
Sub-function: User selection

Order	Function	Parameter or Status checked or Action		Display and Notes	Fault finding
1	Air conditioning	**ET002:**	+ 12 V side lights feed	**PRESENT** when the lights are lit and **ABSENT** if not	In the event of a lighting fault, see **ALP 13**.
2		**ET007:**	Computer + after ignition feed	**PRESENT**	Check the **insulation, continuity and absence of interference resistance** on the computer earths and feeds
3		**ET022:**	heated rear screen command	**INACTIVE** (the control is only authorised when the engine is running)	In the event of a fault, refer to the interpretation of this status.
4		**ET028:**	electric heated windscreen control	**INACTIVE** (the control is only authorised when the engine is running)	In the event of a fault, consult the interpretation for this status.
5		**ET033:**	automatic mode	**YES** if climate control requested in automatic mode (**AUTO** pressed). **NO** if not.	In the event of a fault, consult the interpretation for this status.
6		**ET050:**	air conditioning mode	**YES** if climate control requested in manual mode (**AC** button pressed). **NO** if not.	In the event of a fault, refer to the interpretation of this status.

GETtheMANUALS.org

NOTES	Only carry out this conformity check after a **full check** with the diagnostic tool (the values shown in this conformity check are given as a guide only). **Test conditions:** engine off, ignition on, **climate control switched off**.

Function: Air conditioning
Sub-function: User selection (continued)

Order	Function	Parameter or Status checked or Action	Display and Notes	Fault finding
1	Air conditioning	**PR102:** LEDs lighting up	**Lights off: 100 %** **Lights on:** **1 %** ± 5 % with dim lighting **100 %** ± 5 % with full lighting	In the event of a lighting fault, see **ALP 13**.
2		**PR103:** 0 V controlled by dimmer	**Lights off: 0 V.** **Lights on:** **8 V + 1 V** minimum lighting **0 V** maximum lighting	In the event of a lighting fault, see **ALP 13**.

GETtheMANUALS.org

NOTES	Only carry out this conformity check after a **full check** with the diagnostic tool (the values shown in this conformity check are given as a guide only). **Test conditions:** engine off, ignition on, **climate control switched off**.

Function: Air conditioning
Sub-function: Passenger compartment fan

Order	Function	Parameter or Status checked or Action		Display and Notes	Fault finding
1	Air conditioning	**PR008:**	Fan speed	**from 4 % to 95 %**	In the event of a fault **apply the fault finding procedure** for fault: **DF082** Passenger compartment ventilation motor circuit. Note: To check the consistency of these signals, refer to the fault finding procedure for parameters **PR008** and **PR019**.
2		**PR019:**	PWM value Passenger compartment fan unit (PWM: modulated control voltage)	**0 to 100 %**	
3		**ET021:**	recirculation motor command	**STATUS 1** recirculation motor: recirculation or **STATUS 2** recirculation motor: external air	In the event of a fault **apply the fault finding procedure** for fault: **DF021** Recirculation motor circuit.
4		**PR023:**	position of footwell/ ventilation distribution flaps	**0 %** closed to **100 %** open	In the event of a fault **apply the fault finding procedure** for faults: **DF028** Footwell/ ventilation distribution motor circuit and **DF029**, Distribution/de-icing motor circuit.

GETtheMANUALS.org

NOTES	Only carry out this conformity check after a **full check** with the diagnostic tool (the values shown in this conformity check are given as a guide only). **Test conditions:** engine off, ignition on, **climate control switched off**.

Function: Air conditioning
Sub-function: Cold loop

Order	Function	Parameter or Status checked or Action	Display and Notes	Fault finding
1	Air conditioning	**ET003:** AC inhibited by injection computer	YES	YES normal when engine not running
2		**ET005:** refrigerant under-pressure	**NO**	If the status displays YES, consult the fault finding procedure for status **ET005**.
3		**ET006:** refrigerant over-pressure	**NO**	If the status displays YES, consult the fault finding procedure for status **ET006**.
4		**ET020:** compressor control	**INACTIVE**	Compressor control inactive when engine not running (inhibited).
5		**ET023:** Low-speed fan assembly	**INACTIVE**	**None.**
6		**ET024:** High-speed fan assembly	**INACTIVE**	**None.**
7		**ET027:** fast idle speed control	**INACTIVE**	**None.**
8		**ET037:** cooling fan assembly request by injection	**NO**	**None.**
9		**ET140:** air conditioning request	**INACTIVE**	**None.**

GETtheMANUALS.org

NOTES	Only carry out this conformity check after a **full check** with the diagnostic tool (the values shown in this conformity check are given as a guide only). **Test conditions:** engine off, ignition on, **climate control switched off**.

Function: Air conditioning
Sub-function: Cold loop (continued)

Order	Function	Parameter or Status checked or Action	Display and Notes	Fault finding
10	Air conditioning	**PR001:** internal temperature	**interior temperature ± 5 °C**	In the event of a fault **apply the fault finding procedure** for fault: **DF007** Internal temperature sensor circuit.
11		**PR002:** external temperature	**external temperature ± 5 °C**	In the event of a fault, run **fault finding on the multiplex network**.
12		**PR003:** evaporator temperature	**0 < X < 5 °C** if the engine is cold and: **- 10 < X < 15 °C** if the engine has been running.	In the event of a fault **apply the fault finding procedure** for fault: **DF020** Evaporator temperature sensor circuit.
13		**PR004:** coolant temperature	**engine coolant temperature ± 5 °C**	In the event of a fault, perform **fault finding on the injection system** (which is producing the signal).
14		**PR005:** power absorbed signal	**0 W < X < 300 W** (ambient temperature 23 °C)	For more information, refer to the fault finding procedure for parameter **PR005**.
15		**PR006:** solar radiation	from **0 W** for zero solar radiation to **500 W** for maximum solar radiation.	In the event of a fault **apply the fault finding procedure** for fault: **DF026** Solar radiation sensor circuit.
16		**PR007:** humidity	**0 to 100 %**	In the event of a fault **apply the fault finding procedure** for fault: **DF027** Humidity sensor circuit.

GETtheMANUALS.org

NOTES	Only carry out this conformity check after a **full check** with the diagnostic tool (the values shown in this conformity check are given as a guide only). **Test conditions:** engine off, ignition on, **climate control switched off**.

Function: Air conditioning
Sub-function: Cold loop (continued)

Order	Function	Parameter or Status checked or Action	Display and Notes	Fault finding
17	Air conditioning	**PR016:** refrigerant pressure	**1 bar < X < 15 bar**	In the event of a fault **apply the fault finding procedure** for fault: **DF002** Refrigerant pressure sensor circuit.
18		**PR017:** **CO** inlet toxicity	**0 to 100 %** Note: **If there is a fault with the sensor, the value displayed is 0 %**	In the event of a fault, **apply the procedure for this parameter**. **Special note:** The toxicity sensor may be fitted on the vehicle, depending on the equipment level.
19		**PR018:** **NO** inlet toxicity	**0 to 100 %** Note: **If there is a fault with the sensor, the value displayed is 0 %**	In the event of a fault, **apply the procedure for this parameter**. **Special note:** The toxicity sensor may be fitted on the vehicle, depending on the equipment level.
20		**PR020:** position of left-hand mixing flap	**0 %** maximum cold to **100 %** maximum heat	In the event of a fault **apply the fault finding procedure** for fault: **DF019** left-hand side mixing motor circuit.

GETtheMANUALS.org

NOTES	Only carry out this conformity check after a **full check** with the diagnostic tool (the values shown in this conformity check are given as a guide only). **Test conditions:** engine off, ignition on, **climate control switched off**.

Function: Air conditioning
Sub-function: Cold loop (continued)

Order	Function	Parameter or Status checked or Action	Display and Notes	Fault finding
21	Air conditioning	**PR021:** position of right-hand mixing flap	**0 %** maximum cold to **100 %** maximum heat	In the event of a fault **apply the fault finding procedure** for fault: **DF018** Right-hand mixing motor circuit.
22		**PR104:** compressor output control	**0 %** (no capacity control when the engine is stopped).	**None.**

GETtheMANUALS.org

NOTES	Only carry out this conformity check after a **full check** with the diagnostic tool (the values shown in this conformity check are given as a guide only). **Test conditions:** engine off, ignition on, **climate control switched off**.

Function: Air conditioning
Sub-function: Heating

Order	Function	Parameter or Status checked or Action	Display and Notes	Fault finding
1	Air conditioning	**PR001:** internal temperature	**interior temperature ± 5 °C**	In the event of a fault **apply the fault finding procedure** for fault: **DF007** Internal temperature sensor circuit.
2		**PR002:** external temperature	**external temperature ± 5 °C**	In the event of a fault, run **fault finding on the multiplex network**.
3		**PR003:** evaporator temperature	**0 < X < 5 °C** if the engine is cold and: **- 10 < X < 15 °C** if the engine has been running.	In the event of a fault **apply the fault finding procedure** for fault: **DF020** Evaporator temperature sensor circuit.
4		**PR004:** coolant temperature	**engine coolant temperature ± 5 °C**	In the event of a fault, perform **fault finding on the injection system** (which is producing the signal).
5		**PR020:** position of left-hand mixing flap	**0 %** maximum cold to **100 %** maximum heat	In the event of a fault **apply the fault finding procedure** for fault: **DF019** left-hand side mixing motor circuit.
6		**PR021:** position of right-hand mixing flap	**0 %** maximum cold to **100 %** maximum heat	In the event of a fault **apply the fault finding procedure** for fault: **DF018** Right-hand mixing motor circuit.

GETtheMANUALS.org

NOTES	Only carry out this conformity check after a **full check** with the diagnostic tool (the values shown in this conformity check are given as a guide only). **Test conditions:** engine off, ignition on, **climate control switched off**.

Function: Air conditioning
Sub-function: Heating (continued)

Order	Function	Parameter or Status checked or Action		Display and Notes	Fault finding
7	Air conditioning	**PR023:**	position of footwell/ ventilation distribution flaps	**0 %** closed to **100 %** open	In the event of a fault **apply the fault finding procedure** for faults: **DF028** Footwell/ ventilation distribution motor circuit and **DF029**, Distribution/de-icing motor circuit.
8		**ET021:**	recirculation motor command	**STATUS 1** recirculation motor: recirculation or **STATUS 2** air recirculation motor: external air	In the event of a fault **apply the fault finding procedure** for fault: **DF021** Recirculation motor circuit.
9		**ET022:**	heated rear screen command	**INACTIVE** (the control is only authorised when the engine is running)	In the event of a fault, consult the interpretation for this status.

GETtheMANUALS.org

NOTES	Only carry out this conformity check after a **full check** with the diagnostic tool (the values shown in this conformity check are given as a guide only). **Test conditions:** engine at idle speed, **air conditioning switched on**.

Main screen

Order	Function	Parameter or Status checked or Action		Display and Notes	Fault finding
1	Air conditioning	**ET001:**	+ 12 V accessories feed	**PRESENT**	None
2		**ET007:**	Computer + after ignition feed	**PRESENT**	Check the **insulation, continuity and absence of interference resistance** on the computer earths and feeds:
3		**ET034:**	+ 12 V battery feed	**PRESENT**	**None.**
4		**ET035:**	heated rear screen through injection	NO	**This status is only for the Particle Filter (FAP) function.**
5		**ET036:**	with the engine running	YES	**None.**
6		**PR014:**	computer feed voltage	11 V < PR014 < 15 V	**None.**
7		**PR015:**	Engine speed	Indicates the idle speed	**None.**
8		**PR095:**	Vehicle speed	0 mph or km/h	**None.**

GETtheMANUALS.org

NOTES	Only carry out this conformity check after a **full check** with the diagnostic tool (the values shown in this conformity check are given as a guide only). **Test conditions:** engine at idle speed, **air conditioning switched on**.

Function: Air conditioning
Sub-function: User selection

Order	Function	Parameter or Status checked or Action		Display and Notes	Fault finding
1	Air conditioning	**ET002:**	+ 12 V side lights feed	**PRESENT** when the lights are lit and **ABSENT** if not	In the event of a lighting fault, see **ALP 13**.
2		**ET007:**	Computer + after ignition feed	**PRESENT**	Check the **insulation, continuity and absence of interference resistance** on the computer earths and feeds:
3		**ET022:**	heated rear screen command	**ACTIVE** when a key is pressed and the engine running, **INACTIVE** otherwise	In the event of a fault, consult the interpretation for this status.
4		**ET028:**	electric heated windscreen control	**ACTIVE** when a key is pressed and the engine running, **INACTIVE** otherwise	In the event of a fault, refer to the interpretation of this status.
5		**ET033:**	automatic mode	**YES** if climate control requested in automatic mode (**AUTO** pressed). **NO** if not.	In the event of a fault, consult the interpretation for this status.
6		**ET050:**	air conditioning mode	**YES** if climate control requested in manual mode (**AC** button pressed). **NO** if not.	In the event of a fault, consult the interpretation for this status.

GETtheMANUALS.org

NOTES	Only carry out this conformity check after a **full check** with the diagnostic tool (the values shown in this conformity check are given as a guide only). **Test conditions:** engine at idle speed, **air conditioning switched on**.

Function: Air conditioning
Sub-function: User selection (continued)

Order	Function	Parameter or Status checked or Action	Display and Notes	Fault finding
1	Air conditioning	**PR102:** LEDs lighting up	**Lights off: 100 %** **Lights on:** **1 %** ± 5 % with dim lighting **100 %** ± 5 % with full lighting	In the event of a lighting fault, see **ALP 13**.
2		**PR103:** 0 volts controlled by dimmer	**Lights off: 0 V.** **Lights on:** **8 V + 1 V** minimum lighting **0 V** maximum lighting	In the event of a lighting fault, see **ALP 13**.

GETtheMANUALS.org

NOTES	Only carry out this conformity check after a **full check** with the diagnostic tool (the values shown in this conformity check are given as a guide only). **Test conditions:** engine at idle speed, **air conditioning switched on**.

Function: Air conditioning
Sub-function: Passenger compartment fan

Order	Function	Parameter or Status checked or Action	Display and Notes	Fault finding
1	Air conditioning	**PR008:** Fan speed	from **4 %** to **95 %**	In the event of a fault **apply the fault finding procedure** for fault: **DF082** Passenger compartment ventilation motor circuit. Note: To check the consistency of these signals, refer to the fault finding procedure for parameters **PR008** and **PR019**.
2		**PR019:** Passenger compartment blower unit PWM setpoint (PWM: pulse wave modulation)	**0** to **100 %**	
3		**ET021:** recirculation motor command	**STATUS 1** recirculation motor: recirculation or **STATUS 2** recirculation motor: external air	In the event of a fault **apply the fault finding procedure** for fault: **DF021** Recirculation motor circuit.
4		**PR023:** position of footwell/ ventilation distribution flaps	**0 %** closed to **100 %** open	In the event of a fault **apply the fault finding procedure** for faults: **DF028** Footwell/ ventilation distribution motor circuit and **DF029**, Distribution/de-icing motor circuit.

GETtheMANUALS.org

NOTES	Only carry out this conformity check after a **full check** with the diagnostic tool (the values shown in this conformity check are given as a guide only). **Test conditions:** engine at idle speed, **air conditioning switched on**.

Function: Air conditioning
Sub-function: Cold loop

Order	Function	Parameter or Status checked or Action		Display and Notes	Fault finding
1	Air conditioning	**ET003:**	AC inhibited by injection computer	NO	"NO" normal when engine not running.
2		**ET005:**	refrigerant under-pressure	**NO**	If the status displays YES, consult the fault finding procedure for status **ET005**.
3		**ET006:**	refrigerant over-pressure	**NO**	If the status displays YES, consult the fault finding procedure for status **ET006**.
4		**ET020:**	compressor control	**ACTIVE**	Compressor control inactive when engine not running (inhibited).
5		**ET023:**	Low-speed fan assembly	**ACTIVE or INACTIVE**	**None.**
6		**ET024:**	High-speed fan assembly	**ACTIVE or INACTIVE**	**None.**
7		**ET027:**	fast idle speed control	**ACTIVE or INACTIVE**	**None.**
8		**ET037:**	cooling fan assembly request by injection	**YES**	**None.**
9		**ET140:**	air conditioning request	**ACTIVE**	**None.**

GETtheMANUALS.org

NOTES	Only carry out this conformity check after a **full check** with the diagnostic tool (the values shown in this conformity check are given as a guide only). **Test conditions:** engine at idle speed, **air conditioning switched on**.

Function: Air conditioning
Sub-function: Cold loop (continued)

Order	Function	Parameter or Status checked or Action	Display and Notes	Fault finding
10	Air conditioning	**PR001:** internal temperature	**interior temperature ± 5 °C**	In the event of a fault **apply the fault finding procedure** for fault: **DF007** Internal temperature sensor circuit.
11		**PR002:** external temperature	**external temperature ± 5 °C**	In the event of a fault, run **fault finding on the multiplex network**.
12		**PR003:** evaporator temperature	**- 5 < X < 25 °C** after operating for a few minutes.	In the event of a fault **apply the fault finding procedure** for fault: **DF020** Evaporator temperature sensor circuit.
13		**PR004:** coolant temperature	**engine coolant temperature ± 5 °C**	In the event of a fault, perform **fault finding on the injection system** (which is producing the signal).
14		**PR005:** power absorbed signal	**100 W < X < 1700 W** (ambient temperature 23 °C)	For more information, refer to the fault finding procedure for parameter **PR005**.
15		**PR006:** solar radiation	From **0 W** for zero solar radiation to **500 W** for maximum solar radiation.	In the event of a fault **apply the fault finding procedure** for fault: **DF026** Solar radiation sensor circuit.
16		**PR007:** humidity	**0** to **100 %**	In the event of a fault **apply the fault finding procedure** for fault: **DF027** Humidity sensor circuit.

GETtheMANUALS.org

NOTES	Only carry out this conformity check after a **full check** with the diagnostic tool (the values shown in this conformity check are given as a guide only). **Test conditions:** engine at idle speed, **air conditioning switched on**.

Function: Air conditioning
Sub-function: Cold loop (continued)

Order	Function	Parameter or Status checked or Action	Display and Notes	Fault finding
17	Air conditioning	**PR016:** refrigerant pressure	**3 bar < X < 25 bar**	In the event of a fault **apply the fault finding procedure** for fault: **DF002** Refrigerant pressure sensor circuit.
18		**PR017:** **CO** inlet toxicity	**0 to 100 %** Note: **If there is a fault with the sensor, the value displayed is 0 %**	In the event of a fault, **apply the procedure for this parameter**. **Special note:** The toxicity sensor may be fitted on the vehicle, depending on the equipment level.
19		**PR018:** **NO** inlet toxicity	**0 to 100 %** Note: **If there is a fault with the sensor, the value displayed is 0 %**	In the event of a fault, **apply the procedure for this parameter**. **Special note:** The toxicity sensor may be fitted on the vehicle, depending on the equipment level.
20		**PR020:** position of left-hand mixing flap	**0 %** maximum cold to **100 %** maximum heat	In the event of a fault **apply the fault finding procedure for fault DF019** Left-hand mixing motor circuit.

GETtheMANUALS.org

NOTES	Only carry out this conformity check after a **full check** with the diagnostic tool (the values shown in this conformity check are given as a guide only). **Test conditions:** engine at idle speed, **air conditioning switched on**.

Function: Air conditioning
Sub-function: Cold loop (continued)

Order	Function	Parameter or Status checked or Action	Display and Notes	Fault finding
21	Air conditioning	**PR021:** position of right-hand mixing flap	**0 %** maximum cold to **100 %** maximum heat	In the event of a fault **apply the fault finding procedure** for fault: **DF018** Right-hand mixing motor circuit.
22		**PR104:** compressor output control	**0 to 100 %** for compressors controlled by solenoid valve. **0 %** for pneumatically controlled compressors.	**None.**

GETtheMANUALS.org

NOTES	Only carry out this conformity check after a **full check** with the diagnostic tool (the values shown in this conformity check are given as a guide only). **Test conditions:** engine at idle speed, **air conditioning switched on**.

Function: Air conditioning
Sub-function: Heating

Order	Function	Parameter or Status checked or Action	Display and Notes	Fault finding
1	Air conditioning	**PR001:** internal temperature	**interior temperature ± 5 °C**	In the event of a fault **apply the fault finding procedure** for fault: **DF007** Internal temperature sensor circuit.
2		**PR002:** external temperature	**interior temperature ± 5 °C**	In the event of a fault, run **fault finding on the multiplex network**.
3		**PR003:** evaporator temperature	**- 5 < X < 25 °C** after operating for a few minutes.	In the event of a fault **apply the fault finding procedure** for fault: **DF020** Evaporator temperature sensor circuit.
4		**PR004:** coolant temperature	**engine coolant temperature ± 5 °C**	In the event of a fault, perform **fault finding on the injection system** (which is producing the signal).
5		**PR020:** position of left-hand mixing flap	**0 %** maximum cold to **100 %** maximum heat	In the event of a fault **apply the fault finding procedure** for fault: **DF019** left-hand side mixing motor circuit.
6		**PR021:** position of right-hand mixing flap	**0 %** maximum cold to **100 %** maximum heat	In the event of a fault **apply the fault finding procedure** for fault: **DF018** Right-hand mixing motor circuit.

GETtheMANUALS.org

NOTES	Only carry out this conformity check after a **full check** with the diagnostic tool (the values shown in this conformity check are given as a guide only). **Test conditions:** engine at idle speed, **air conditioning switched on**.

Function: Air conditioning
Sub-function: Heating (continued)

Order	Function	Parameter or Status checked or Action		Display and Notes	Fault finding
7	Air conditioning	**PR023:**	position of footwell/ ventilation distribution flaps	**0 %** closed to **100 %** open	In the event of a fault **apply the fault finding procedure** for faults **DF028** Footwell/ ventilation distribution motor circuit and **DF029**, Distribution/de-icing motor circuit.
8		**ET021:**	recirculation motor command	**STATUS 1** recirculation motor: recirculation or **STATUS 2** air recirculation motor: external air	In the event of a fault **apply the fault finding procedure** for fault: **DF021** Recirculation motor circuit.
9		**ET022:**	heated rear screen command	**ACTIVE** when a key is pressed and the engine running, **INACTIVE** otherwise	In the event of a fault, consult the interpretation for this status.

GETtheMANUALS.org

Index	Diagnostic tool title
ET001	+ 12 V accessories feed
ET002	+ 12 V side lights feed
ET003	AC inhibited by injection computer
ET005	Refrigerant: underpressure
ET006	Refrigerant: over-pressure
ET007	+ after ignition computer feed
ET020	Compressor control
ET021	Air recirculation motor control
ET022	Heated rear screen switch
ET023	Low-speed fan assembly
ET024	High-speed fan assembly
ET027	Fast idle speed control
ET028	Electrically heated windscreen command
ET033	Automatic mode
ET034	+ 12 V battery feed
ET035	Heated rear screen through injection
ET036	Engine running
ET037	Cooling fan unit request through injection
ET050	Air conditioning mode
ET140	Air conditioning request

GETtheMANUALS.org

ET005	REFRIGERANT: UNDERPRESSURE

NOTES	The under-pressure status rises if the pressure reading taken by the sensor is **below 2 bar**.
	There must be no present or stored faults. (in particular, faults: **DF033** Refrigerant load and **DF002** Refrigerant pressure sensor circuit).
	Special note: The underpressure status **inhibits** air conditioning operation.

Check the **connection and condition** of the refrigerant fluid pressure sensor connector.
Replace the connector if necessary.

Connect the bornier in place of the computer and check the **insulation, continuity and the absence of interference resistance** on the following connections:

computer connector A **track 8** → **track A** of the pressure sensor
computer connector A **track 11** → **track B** of the pressure sensor
computer connector A **track 3** → **track C** of the pressure sensor

Repair if necessary.

With the ignition switched on, check that the sensor is correctly supplied by the computer across: **track A** and **track B** of the sensor.
If the voltage is not **5 V**, replace the climate control computer.

Ensure that there are no refrigerant fluid **leaks** in the climate control system.

If the fault is still present, **check the refrigerant fluid (650 g ± 25 g)**.
Refill if necessary.

If the refrigerant level is correct, there are no leaks in the climate control system and the pressure sensor connections checks are correct: **replace** the pressure sensor.

AFTER REPAIR	Repeat the conformity check from the start.

GETtheMANUALS.org

ET006	REFRIGERANT: OVERPRESSURE

NOTES	The overpressure status is set if the pressure reading taken by the sensor is **above 27 bar (relative)**.
	There must be no present or stored faults. (in particular faults: **DF033** Refrigerant charge, **DF030** Compressor capacity control circuit and **DF002** Refrigerant pressure circuit).
	Special note: The overpressure status **inhibits** air conditioning operation.

For electrically controlled capacity:
Check the **connection and condition** of the refrigerant fluid pressure sensor connector.
Replace the connector if necessary.

Connect the bornier in place of the computer and check the **insulation, continuity and the absence of interference resistance** of the following connections:

computer connector A **track 8** ⟶ **track A** of the pressure sensor
computer connector A **track 11** ⟶ **track B** of the pressure sensor
computer connector A **track 3** ⟶ **track C** of the pressure sensor

Repair if necessary.

Display parameter: **PR016** Refrigerant pressure, and check that the pressure readings drop sharply (the parameter should not remain static) after the climate control has been turned off.
If the pressure does not fall, **replace** the refrigerant pressure sensor.

Check that **the capacity control is being correctly carried out** by displaying parameter **PR104** Compressor capacity control:
– With the engine off, this parameter should display 0 % (maximum capacity).
– With the engine running and the air conditioning switched on, this parameter should display a value between 0 and 100 % (there is no standard control case because there are multiple conditions for this case).

AFTER REPAIR	Repeat the conformity check from the start.

GETtheMANUALS.org

ET006 **CONTINUED 1**	

If the capacity does not vary and the control solenoid valve is not faulty:
With the ignition on, check for **12 V feed** on **track B** of the capacity control solenoid valve.
Repair if necessary.

If the capacity still does not vary: **check the refrigerant level** (650 g ± 25 g) as a shortage of refrigerant may be corrected by the climate control system, which will raise the compressor capacity (in order to maintain climate control efficiency).
Refill if necessary.

If the refrigerant fluid level is correct and the capacity control is operating correctly (feed on track B of the solenoid valve and an earth control on track A) there may be a mechanical fault on the compressor capacity control card.
If this is the case **replace the air conditioning compressor**.

For pneumatically controlled capacity:
Check the **connection and condition** of the refrigerant pressure sensor connector.
Replace the connector if necessary.

Connect the bornier in place of the computer and check **the insulation, continuity and absence of interference resistance** on the following connections:

computer connector A **track 8** → **track A** of the pressure sensor
computer connector A **track 11** → **track B** of the pressure sensor
computer connector A **track 3** → **track C** of the pressure sensor

Repair if necessary.

Display parameter: **PR016** Refrigerant pressure, and check that the pressure readings drop sharply (the parameter should not remain static) after the climate control has been turned off.
If the pressure does not fall, **replace** the refrigerant pressure sensor.

If the refrigerant pressure is correct, there may be a mechanical fault on the compressor capacity control card.
If this is the case **replace the air conditioning compressor**.

AFTER REPAIR	Repeat the conformity check from the start.

GETtheMANUALS.org

ET022	HEATED REAR SCREEN CONTROL

NOTES	If the active/inactive status is inconsistent, apply the interpretation of this status.

Check for the **presence** of the heated rear screen relay.
Check **the condition of the clips** on the heated rear screen relay, located on the relay plate. Replace the clips if necessary.
With the ignition on, check for **+ 12 V** on **track 1** of the relay.
Connect the universal bornier in place of the computer and check the **insulation, continuity and the absence of interference resistance** on the following connection: computer connector A **track 12** ⟶ **track 2** of the heated rear screen relay Repair if necessary.
Measure **the resistance** of the relay between: **track 1** and **track 2** of the heated rear screen relay and replace the relay if the resistance is not approximately: **60 Ω** at 20 ˚C.

AFTER REPAIR	Follow the instructions to confirm repair. Clear the stored faults. Deal with any other faults.

GETtheMANUALS.org

ET023	LOW-SPEED FAN ASSEMBLY

NOTES	If the fan unit is not operating as normal, carry out a complete check on the fan unit circuit (details under fault finding - injection).

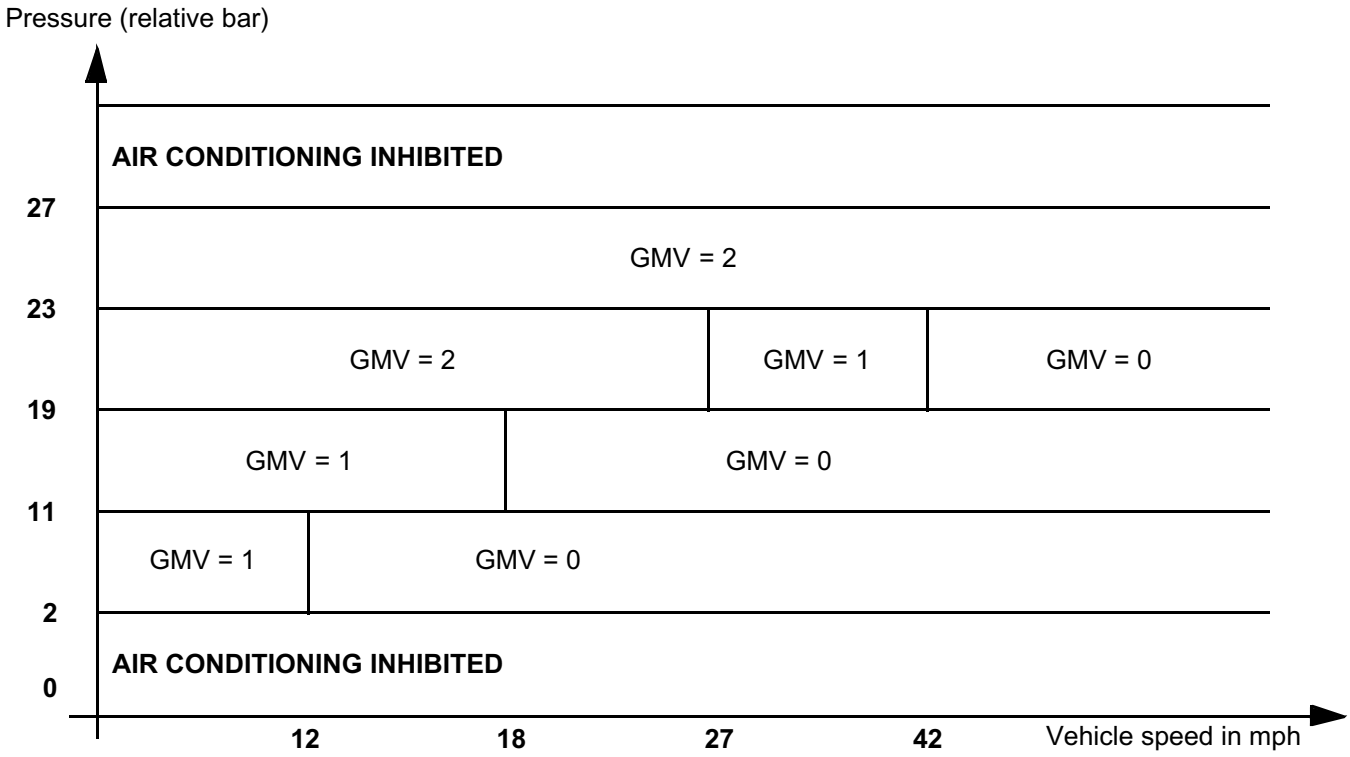

GMV = 1 Low-speed engine cooling fan
GMV = 2 High-speed engine cooling fan
GMV = 0 Cooling fan off

The fan unit is not used for vehicle speeds above 42 mph (70 km/h).
Except in rare cases, or despite the above speed being reached, the pressure is greater than 23 bar e.g.: (when driving behind a lorry).
When the vehicle is stationary, the fan unit is always used, and runs at low speed when the high pressure is lower than 19 bar (relative), and at high speed if not.
When the vehicle is being driven, the fan unit may either not operate or operate at high or low speed depending on the condenser outlet pressure and the vehicle speed.

AFTER REPAIR	Repeat the conformity check from the start.

GETtheMANUALS.org

ET024	HIGH-SPEED FAN ASSEMBLY

NOTES	If the fan unit is not operating as normal, carry out a complete check on the fan unit circuit (details under fault finding - injection).

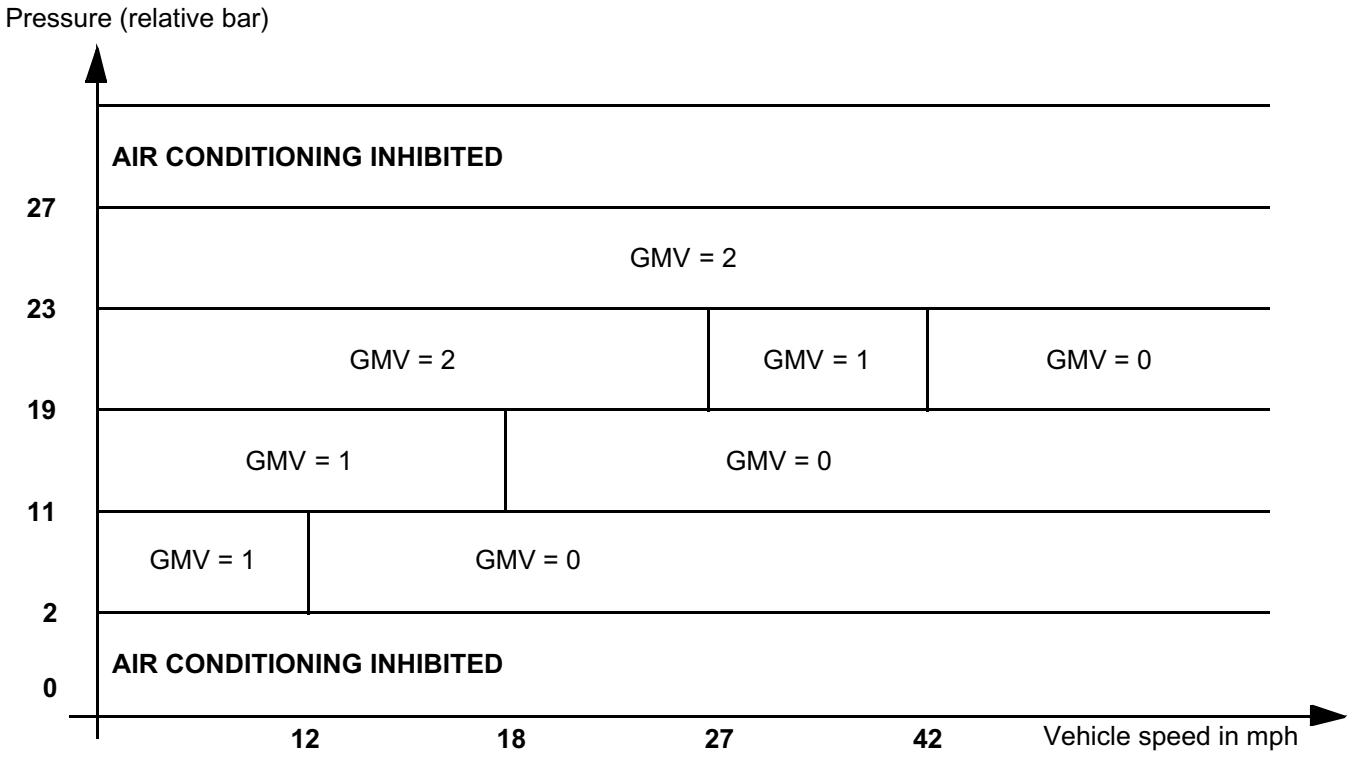

GMV = 1 Low-speed engine cooling fan
GMV = 2 High-speed engine cooling fan
GMV = 0 Cooling fan off

The fan unit is not used for vehicle speeds above 42 mph (70 km/h).
Except in rare cases, or despite the above speed being reached, the pressure is greater than 23 bar e.g.: (when driving behind a lorry).
When the vehicle is stationary, the fan unit always operates, and runs at low speed if the high pressure is lower than 19 bar (relative), and at high speed if not.
When the vehicle is being driven, the fan unit may either not operate or operate at high or low speed depending on the condenser outlet pressure and the vehicle speed.

AFTER REPAIR	Repeat the conformity check from the start.

GETtheMANUALS.org

ET028	HEATED WINDSCREEN COMMAND

NOTES	If the active/inactive status is inconsistent, apply the interpretation of this status.

Check for the **presence** of the heated windscreen relay.
Check **the condition of the clips** on the heated windscreen relay, located on the relay plate. Replace the clips if necessary.
With the ignition on, check for **+ 12 V** on **track 1** of the relay.
Connect the bornier in place of the computer and check **the insulation, continuity and absence of interference resistance** on the following connection: computer connector A **track 4** ⟶ **track 2** of the heated windscreen relay Repair if necessary.
Measure **the resistance** of the relay across **track 1** and **track 2** of the heated windscreen relay. Replace the relay if its resistance is zero or infinity (on average, the resistance should be between 60 to 90 Ω depending on the type of relay).

AFTER REPAIR	Follow the instructions to confirm repair. Clear the stored faults. Deal with any other faults.

GETtheMANUALS.org

ET033	AUTOMATIC MODE

NOTES	None

ET033 AUTOMATIC MODE:

The automatic mode is activated by pressing the **AUTO** button on the control panel. This mode comprises automatic operation of the air distribution, passenger compartment ventilation and compressor engagement functions according to the temperature requested. Only the temperature setpoint (left-hand and right-hand) is made manually.
After the **AUTO** button on the control panel is pressed, status **ET033** should display **YES**. If the status does not display this, check that the warning light on the **AUTO** button lights up at the same time as the **AC** button. If the warning lights do not light up, take a fault reading and carry out a conformity check to verify system conformity. If the fault is still present, contact your **Techline**.

AFTER REPAIR	Repeat the conformity check from the start.

GETtheMANUALS.org

ET050	AIR CONDITIONING MODE

NOTES	None

ET050 AIR CONDITIONING MODE:

The air conditioning mode corresponds to the climate control manual mode. This mode is activated by pressing the **AUTO** button on the control panel. This mode comprises engagement of the compressor (according to the temperature requested). Adjustments to the left-hand and right-hand temperature setpoints, air distribution, passenger compartment ventilation and compressor engagement functions are made manually.
After the **AC** button on the control panel is pressed, status **ET050** should display **YES**. If the status does not display this, check that the warning light on the **AC** button lights up. If the warning light does not light up, take a fault reading and carry out a conformity check to verify system conformity.
If the fault is still present, contact your **Techline**.

AFTER REPAIR	Repeat the conformity check from the start.

GETtheMANUALS.org

Tool parameter	Diagnostic tool title
PR001	Interior temperature
PR002	External temperature
PR003	Evaporator temperature
PR004	Coolant temperature
PR005	Power absorbed signal
PR006	Solar radiation
PR007	Humidity
PR008	Fan unit speed
PR014	Computer feed voltage
PR015	Engine speed
PR016	Refrigerant pressure
PR017	CO input toxicity
PR018	NO input toxicity
PR019	Passenger compartment fan PWM setting
PR020	Position of left-hand mixing flap
PR021	Position of right-hand mixing flap
PR023	Position of footwell/ventilation distribution flap.
PR095	Vehicle speed
PR102	LEDs lighting up
PR103	0 V controlled by dimmer
PR104	Compressor output control

GETtheMANUALS.org

PR005	POWER ABSORBED SIGNAL

NOTES	The values listed below are examples only.

Whether the variable capacity compressor is "pneumatic" or electrically controlled, the power absorbed by the compressor can be anything from several hundred watts to approximately 6 kW depending on weather conditions, vehicle speed and compressor rotation speed.

The power absorbed signal is a function of two parameters:
– The continuous high pressure readings.
– The compressor rotation speed.

The power consumed value calculated by the climate control computer is transmitted to the engine computer. This allows the engine computer to anticipate the effect that the load variations induced by the compressor will have on the vehicle at idle speed and when in motion.

GETtheMANUALS.org

PR008	FAN SPEED

NOTES	The values listed below are examples only.

Controlled values with engine stopped and engine running (tolerance ± 15 %).

Blower speed	SPEED 0	SPEED 1	SPEED 2	SPEED 3	SPEED 4	SPEED 5	SPEED 6	SPEED 7	SPEED 8
Passenger compartment fan PWM setting	**0 %**	**10 %**	**20 %**	**30 %**	**43 %**	**55 %**	**69 %**	**82 %**	**100 %**
Fan unit speed	**4 %**	**15 %**	**27 %**	**38 %**	**52 %**	**68 %**	**82 %**	**95 %**	**95 %**

GETtheMANUALS.org

PR017	CO INPUT TOXICITY

NOTES	**If the CO input toxicity sensor is faulty, the parameter value displayed is 0 %. Fault finding cannot be carried out on this sensor and therefore no fault is associated with it.**

Check the **connection and condition** of the CO input toxicity sensor
Replace the connector if necessary.

Use the universal bornier to check the **insulation, continuity and the absence of interference resistance** of the following connections:

computer connector B **track 16** → **track 5** of the sensor
computer connector B **track 18** → **track 7** of the sensor
computer connector B **track 19** → **track 10** of the sensor

or:

computer connector B **track 1** → **track 5** of the sensor
computer connector B **track 3** → **track 7** of the sensor
computer connector B **track 4** → **track 10** of the sensor

For the new redesign 2005 computer.
Repair if necessary.

If the fault is still present, **replace** the CO input toxicity sensor.

GETtheMANUALS.org

PR018	NO INPUT TOXICITY

NOTES	**If the NO input toxicity sensor is faulty, the parameter value displayed is 0 %. Fault finding cannot be performed on this sensor and therefore there is no associated fault.**

Check the **connection and condition** of the NO input toxicity sensor connector.
Replace the connector if necessary.

Use the universal bornier to check the **insulation, continuity and the absence of interference resistance** of the following connections:

computer connector B **track 16** → **track 5** of the sensor
computer connector B **track 17** → **track 6** of the sensor
computer connector B **track 19** → **track 10** of the sensor

or:

computer connector B **track 1** → **track 5** of the sensor
computer connector B **track 2** → **track 6** of the sensor
computer connector B **track 4** → **track 10** of the sensor

For the new redesign 2005 computer.
Repair if necessary.

If the fault is still present, **replace** the NO input toxicity sensor

GETtheMANUALS.org

PR019	PASSENGER COMPARTMENT FAN PWM SETTING

NOTES	The values listed below are examples only.

Controlled values with engine stopped and engine running (tolerance ± 15 %).

Blower speed	SPEED 0	SPEED 1	SPEED 2	SPEED 3	SPEED 4	SPEED 5	SPEED 6	SPEED 7	SPEED 8
Passenger compartment fan PWM setting	**0 %**	**10 %**	**20 %**	**30 %**	**43 %**	**55 %**	**69 %**	**82 %**	**100 %**
Fan unit speed	**4 %**	**15 %**	**27 %**	**38 %**	**52 %**	**68 %**	**82 %**	**95 %**	**95 %**

GETtheMANUALS.org

PR023	POSITION OF FOOTWELL/VENTILATION DISTRIBUTION FLAP.

NOTES	The values listed below are examples only (they depend on which way the flap is being moved).

Values checked with the engine stopped and engine running and climate control in manual mode (tolerance ± 15 %).

Position of flap controls		Position of de-icing distribution flap	Position of footwell ventilation flap
Demisting		**100 %**	**100 %**
Dashboard air vent		**6 %**	**6 %**
Footwell ventilation		**6 %**	**55 %**
Demisting + footwell ventilation		**100 %**	**55 %**
Footwell ventilation + dashboard air vent		**6 %**	**21 %**
Surround mode		**100 %**	**31 %**

GETtheMANUALS.org

LEFT-HAND MIXING MOTOR CONNECTOR (VIEW FROM REAR)

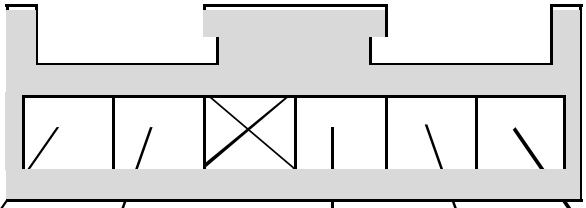

Control 1 of the left-hand mixing motor (computer connector **B track 22** or connector **B track 7** of the new redesign 2005 computer)

Potentiometer **5 V feed** (computer connector **B, track 14**).

Potentiometer earth (computer connector **B track 15** or connector **B track 5** of the new redesign 2005 computer).

Control 2 of the left-hand mixing motor (computer connector **B track 23** or connector **B track 8** of the new redesign 2005 computer)

Left-hand mixing flap position **feedback signal** (computer connector **B, track 4**).

RIGHT-HAND MIXING MOTOR CONNECTOR (VIEW FROM REAR)

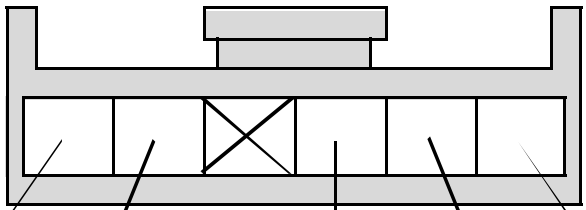

Control 1 of the right-hand mixing motor (computer connector **B track 26** or connector **B track 11** of new redesign 2005 computer)

Potentiometer **5 V feed** (computer connector **B, track 14**).

Potentiometer earth (computer connector **B track 15** or connector **B track 5** of the new redesign 2005 computer).

Control 2 of the right-hand mixing motor (computer connector **B track 27** or connector **B track 12** of the new redesign 2005 computer)

Right-hand mixing flap position **feedback signal** (computer connector **B, track 5**).

GETtheMANUALS.org

FAN POWER MODULE BLACK 4-TRACK CONNECTOR (VIEW FROM THE REAR)

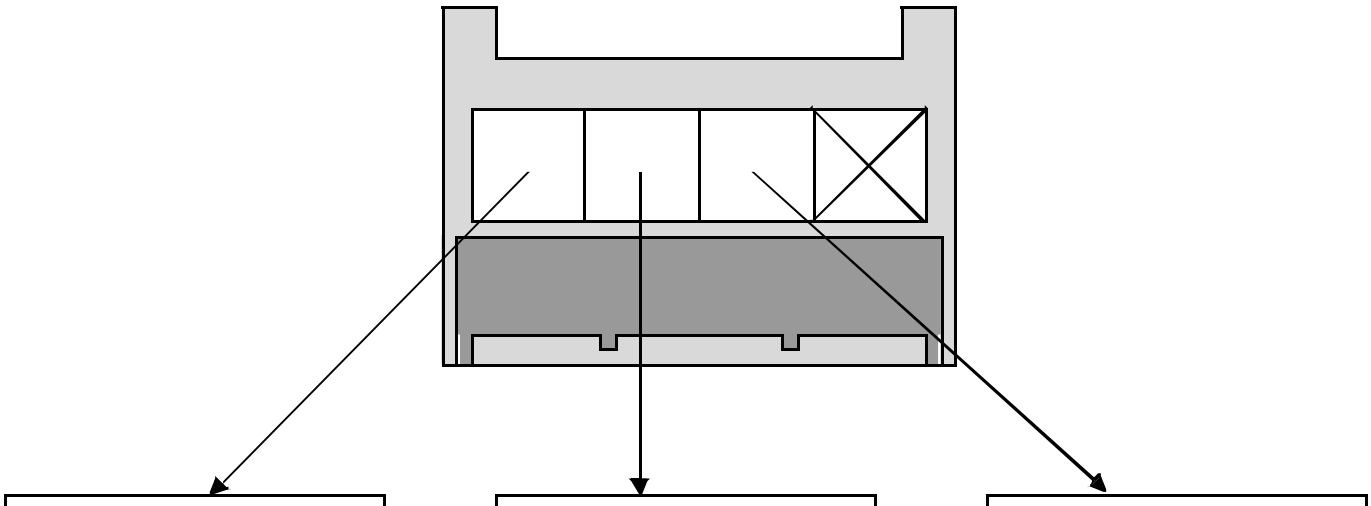

+ 12 V feed

Fan unit speed feedback signal (computer connector **A, track 13**)

Fan unit control (computer connector **A, track 27**)

TOXICITY SENSOR CONNECTOR (VIEW FROM REAR)

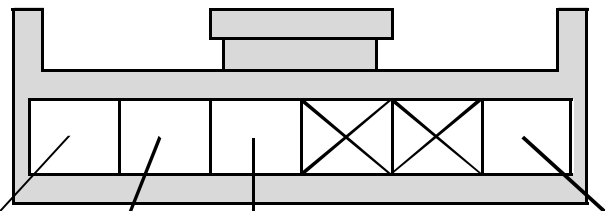

+ 5 V feed (computer connector **B track 16** or connector **B track 1** of the new redesign 2005 computer).

COX signal (computer connector **B track 18** or connector **B track 3** of the new redesign 2005 computer).

Earth (computer connector **B track 19** or connector **B track 4** of the new redesign 2005 computer)

NOx signal (computer connector **B track 17** or connector **B track 2** of the new design 2005 computer)

GETtheMANUALS.org

Passenger compartment fan unit sub-harness (beneath glove compartment)

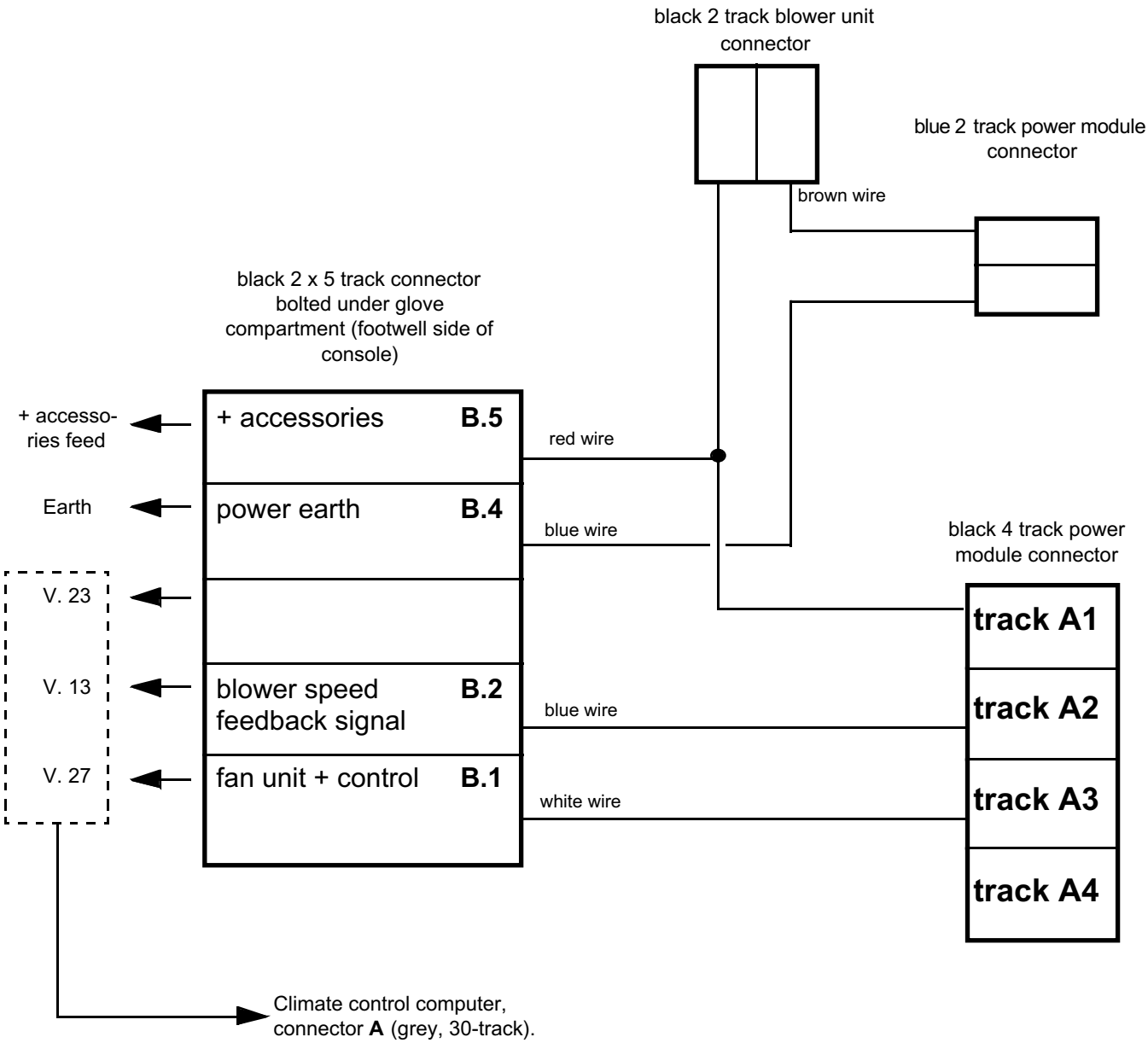

GETtheMANUALS.org

REPLACING THE CLIMATE CONTROL COMPUTER:

– Note the computer configuration according to the optional equipment fitted on the vehicle.

– Ensure that the ignition is switched off.

– Replace the computer (control panel).

– Switch on the ignition and carry out a check using the diagnostic tool.

– Configure the computer according to the optional equipment fitted on the vehicle (see Introduction).

– Go to the read configuration menu and confirm that the configurations have been stored.

– Check for faults and carry out fault finding procedures on any faults that have recurred.

– Clear any stored faults.

– Start the engine, switch on the air conditioning and ensure that it is working correctly.

COLOUR CODING OF COMPUTER CONNECTORS:
– The **grey 30 track** climate control computer connector is referred to in this note as: **connector A**.
– The **green 30 track** climate control computer connector is referred to in this note as: **connector B**.

– The green 15-track connector of the new 2005 redesign climate control computer is also connector B of the new redesign 2005 computer.

Method of recognising the 2005 redesign computer:
– From software 523C31 soft/calibration part no. **8 200 487 008**.
– Visually, you can recognise this computer by looking at the rear side of the control panel: there should be a green 15-track connector, not a 30-track connector.

GETtheMANUALS.org

MEASURING THE CONTROL VOLTAGE OF THE PASSENGER COMPARTMENT FAN UNIT POWER MODULE

There are two ways to measure the control voltage of the passenger compartment fan power module:

1 / Measuring with a multimeter (in voltmeter position):
With the power module connector connected, measure across **track 3** of the module and the earth.
At speed 0, the voltage measured should be approximately 6 V.
At maximum speed (8), the voltage should be zero (± 0.5 V).
The voltage varies between 0 and 6 V for the seven intermediate speeds.

Theoretical values:

speed **0**	6 V
speed **1**	5.1 V
speed **2**	4.75 V
speed **3**	4.3 V
speed **4**	3.9 V

speed **5**	3.5 V
speed **6**	3 V
speed **7**	2.6 V
speed **8**	0 V

2 / Measuring using an oscilloscope (Optima 5800, technical Clip or NXR):
The fan power module is controlled by pulse width modulated control voltage (PWM).
This control voltage is always **6 V**, whereas the control signal (square pulse signal) varies: the amplitude and frequency do not move but the **high status (6 V)** varies in relation to the **low status (0 V)**.
To measure, connect the oscilloscope earth lead to the battery earth and the oscilloscope measuring lead to **track 3** of the power module (module connector connected).
Adjust the time base on the oscilloscope to **2 ms** divisions with a gauge of **5 V** divisions.
The signals obtained should be: a high status of 6 V at 7.6 ms and a low status of 0 V at 0.4 ms for speed 0 and a straight line at 0 V for speed 8.
Example of measurements for the seven speeds in between (for information only):

Blower unit speed	Duration of high state	Duration of low state
speed **1**	7.2 ms	0.8 ms
speed **2**	6.4 ms	1.6 ms
speed **3**	6 ms	2 ms
speed **4**	5.4 ms	2.4 ms
speed **5**	4.8 ms	3.2 ms
speed **6**	4 ms	4 ms
speed **7**	3.6 ms	4.4 ms

GETtheMANUALS.org

NOTES	Only consult this customer complaint after a complete check with the diagnostic tool.

COMMUNICATION FAULT

- NO DIALOGUE WITH THE COMPUTER — ALP 0

AIR DISTRIBUTION FAULT

- AIR DISTRIBUTION FAULT — ALP 1
- FRONT AIR FLOW PROBLEM — ALP 2
- REAR AIR FLOW PROBLEM — ALP 3
- INEFFICIENT WINDSCREEN DEMISTING — ALP 4
- INEFFICIENT REAR SCREEN DE-ICING/DEMISTING — ALP 5
- INEFFICIENT VENTILATION — ALP 6
- NO FRONT PASSENGER COMPARTMENT VENTILATION — ALP 7
- NO REAR PASSENGER COMPARTMENT VENTILATION — ALP 8

HEATING FAULT

- NO HEATING OR INADEQUATE HEATING — ALP 9
- TOO MUCH HOT AIR — ALP 10
- NO COLD AIR — ALP 11
- TOO MUCH COLD AIR — ALP 12

ODOUR PROBLEM IN PASSENGER COMPARTMENT

- UNPLEASANT ODOURS IN PASSENGER COMPARTMENT — ALP 13

WATER IN PASSENGER COMPARTMENT

- WATER IS PRESENT IN PASSENGER COMPARTMENT — ALP 14

CONTROL PANEL FAULT

- NO FRONT CONTROL PANEL LIGHTING — ALP 15
- NO REAR CONTROL PANEL LIGHTING — ALP 16

COMPRESSOR NOISES

- NOISY COMPRESSOR — ALP 17

GETtheMANUALS.org

ALP 0	No dialogue with the computer

NOTES	**None.**

Try the diagnostic tool on another vehicle.

Check:
– The connection between the diagnostic tool and the diagnostic socket (lead in good condition).
– That the fuses are in good condition.

Check for a **+ 12 V battery feed** on **track 16**, and a **+ 12 V after ignition supply** on **track 1** and an **earth** on **track 5** and on **track 4** of the diagnostic socket.
Repair if necessary.

Disconnect **connector A** from the climate control computer to check the **conformity of the computer feeds** and the **insulation, continuity and absence of interference resistance** on the following connections:
Air conditioning connector A (grey, 30-track)

track 6 → **+ after ignition feed**
track 18 → **+ before ignition feed**
track 1 → **earth**
track 16 → **earth**
track 30 → **earth**
track 5 → **track 7** of the diagnostic socket (line K)

Repair if necessary (see the vehicle wiring diagram).

AFTER REPAIR	Check that the system is operating correctly.

GETtheMANUALS.org

ALP 1	Air distribution fault

NOTES	Only consult this customer complaint after a **complete check with the diagnostic tool**.
	Special notes: Adjusting the air distribution or ventilation controls switches off automatic air conditioning mode.

Make sure that **the air circuit** (**cabin filter**, scuttle panel grille, air ducts etc.) is not blocked.
Ensure that the blower blades are in good condition.
If necessary, repair, clean or replace the cabin filter.

Check that the blower unit **has no leaks**.
Repair if necessary.

↓

Switch the passenger compartment fan to full, the temperature control to maximum heat or maximum cold, and vary the air distribution.
Check that the air outlet is the one selected.

Is the **air distribution** correct?

YES → The air distribution is operating correctly. If necessary, explain how the system works to the customer again.

NO

↓

Using the diagnostic tool, check the air distribution control by checking the distribution motor parameters.
PR023 position of footwell/ventilation distribution flaps

Do the flaps open 100 %?

NO → Refer to the interpretation of parameter **PR023 Position of footwell/ventilation distribution flap**, and check how far the flap opens.
In the event of a fault, refer to the Technical Note for fault finding procedures for distribution motors.

YES

↓

(A)

AFTER REPAIR	Check that the system is operating correctly.

GETtheMANUALS.org

ALP 1 CONTINUED	

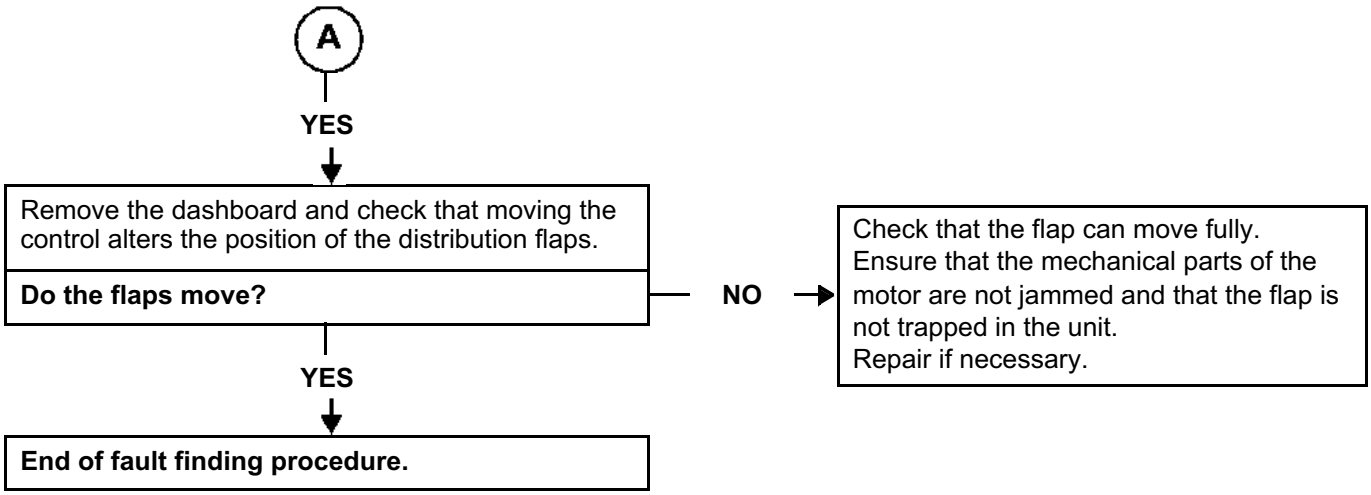

AFTER REPAIR	Check that the system is operating correctly.

GETtheMANUALS.org

ALP 2	Front air flow fault

NOTES	Only check the customer complaint after **a complete check with the diagnostic tool**. Check that the customer knows how to operate the air conditioning system properly.

Does the front passenger compartment fan **work**? — **NO** → Repair, see **ALP 7**.

YES

↓

Make sure that **the air circuit** (**cabin filter**, scuttle panel grille, air vents and extractors, etc.) is not blocked. Ensure that the blower blades are in good condition.
If necessary, repair, clean or replace the cabin filter.

↓

Ensure that the front fan unit is properly **airtight**.
Repair if necessary.

↓

Using the diagnostic tool, check that the recirculation flap is not closed in the recirculation position by checking status **ET021 Recirculation motor control**.
Repair if necessary.

↓

Does the fault disappear when the **air distribution** is changed? — **YES** → Ensure that all the air vents are open.
If the fault is still present, refer to **ALP 1**.

NO

↓

Run a **conformity check** as the problem may arise from a faulty signal from one of the sensors (temperature/ humidity, etc.).
Check that the interior air temperature sensor micro-turbine is in correct working order (if it is faulty it may falsify the measurement).
Replace any faulty components.

↓

AFTER REPAIR	Check that the system is operating correctly.

GETtheMANUALS.org

ALP 2

CONTINUED

(A)

Using the diagnostic tool, check that the fan speed corresponds to computer specifications (tolerance of ± 15 %) by checking parameters:
PR019 passenger compartment fan assembly PWM setpoint (modulated control voltage).
PR008 Fan unit speed
(fan unit speed return signal).
Refer to the Interpretation of parameters **PR019** and **PR008** table to ensure that the values obtained are consistent.

Does the speed comply with specifications?

YES → **End of fault finding procedure.**

NO

Check that the **PWM modulated control** (modulated control voltage) of the passenger compartment fan unit power module varies between 0 and 6 V (from 0 to 100 %) by measuring between track A3 of the module and earth (connector connected).
Note:
for a greater degree of precision, refer to the HELP section when taking the measurement.

Does the voltage vary correctly?

YES

Replace the power module.

NO

Check the **continuity and absence of interference resistance** of the following connection:
computer connector B **track 27** → **track A3** of the module
or
redesign 2005 computer connector B **track 12** → **track A3** of the module
Repair if necessary.

Is the fault still present?

NO → **End of fault finding procedure.**

YES

Replace the control panel. → **End of fault finding procedure.**

AFTER REPAIR	Check that the system is operating correctly.

GETtheMANUALS.org

ALP 3	Rear air flow problem

NOTES	Only check the customer complaint after **a complete check with the diagnostic tool**. Check that the customer knows how to operate the air conditioning system properly.

Does the rear passenger compartment fan **work**? — **NO** → Repair; refer to **ALP 8**.

YES ↓

Make sure that **the air circuit** (**cabin filter**, scuttle panel grille, air vents and extractors etc.) is not blocked.
Ensure that the blower blades are in good condition.
If necessary, repair, clean or replace the cabin filter.

↓

Ensure that the rear fan unit is properly **airtight**.
Repair if necessary.

↓

Check the resistance of the rear blower: **0.95 Ω**.
Replace the rear blower if necessary.

↓

Does the fault disappear when the **air distribution** is changed? — **YES** → Ensure that all the air vents are open.
If the fault is still present, refer to **ALP 1**.

NO ↓

Using the diagnostic tool, check that the fan speed corresponds to the computer signal (tolerance of ± 5 %) by checking parameters:
PR024 Rear fan speed (fan speed feedback signal).
Consult the interpretation of parameter **PR024**, to make sure that the values obtained are consistent.

Does the speed comply with specifications? — **YES** → **End of fault finding procedure.**

NO ↓

(A)

AFTER REPAIR	Check that the system is operating correctly.

GETtheMANUALS.org

ALP 3 CONTINUED	

(A)

Check the resistances of the rear fan resistor unit.
Replace the resistor unit if the resistances are not as follows (**± 0.5 Ω**):
- V1: **5.0 Ω** (tracks C and B)
- V2: **2.4 Ω** (tracks A and B)
- V3: **0.8 Ω** (tracks D and B)

Are the resistances correct? — **NO** → **Replace** the resistor unit.

YES

Check the continuity and absence of interference resistance on the following connections:
- Rear control unit **Track B3** → **Track D** of the resistor unit
- Rear control unit **Track B2** → **Track A** of the control unit
- Rear control unit **Track A1** → **Track C** of the resistor unit

Is the fault still present? — **NO** → **End of fault finding procedure.**

YES

Using an ohmmeter, check that the rear fan control unit is operating correctly.
Replace the unit if necessary. → **End of fault finding procedure.**

AFTER REPAIR	Check that the system is operating correctly.

GETtheMANUALS.org

ALP 4	Inefficient windscreen demisting

NOTES	Only check the customer complaint after **a complete check with the diagnostic tool**.
	Special notes: Check that the inside of the windows are not dirty, as this reduces the efficiency of the demister.

If the vehicle is fitted with a heated windscreen, use the diagnostic tool to check that the **computer is configured correctly** by reading configuration: **LC005 Heated windscreen**. Reconfigure the computer if necessary and check that the heated windscreen is working correctly (see Introduction).

↓

Check that the air extraction vents are not blocked.
Repair if necessary.

Is the fault still present?

NO → **End of fault finding procedure.**

YES

↓

Ensure that there are no **water leaks** in the passenger compartment which would significantly increase the moisture and reduce the effectiveness of the demisting function.
Repair if necessary (see **ALP 14**).

Is the fault still present?

NO → **End of fault finding procedure.**

YES

↓

Check that the compressor is in **correct working order** by using command: **AC021 Compressor clutch** or by switching on the climate control.
Repair if necessary.

↓

(A)

AFTER REPAIR	Check that the system is operating correctly.

GETtheMANUALS.org

ALP 4 CONTINUED	

(A)

Check that the condensation outlet (water from the evaporator) is not blocked.
Repair if necessary

Is it an **air distribution** fault? — **YES** → See **ALP 1**.

NO

Is it an **air flow** fault? — **YES** → See **ALP 2**

NO

Is it a **heater performance** fault? — **YES** → See **ALP 9**

NO

Using the diagnostic tool, check that the recirculation flap is in the **external air** position by checking status **ET021 Recirculation motor command**.
Repair if necessary.

Is the fault still present?

YES

Run a **conformity check** as the fault may arise from a faulty signal from one of the sensors (temperature/humidity, etc.).
Check that the interior air temperature sensor micro-turbine is in correct working order (if it is faulty it may falsify the measurement).
Replace any faulty components.

NO

End of fault finding procedure.

AFTER REPAIR	Check that the system is operating correctly.

GETtheMANUALS.org

ALP 5	Inefficient rear screen de-icing/demisting

NOTES	Only consult this customer complaint after a **complete check with the diagnostic tool**.
	Special notes: – Check that the inside of the windows are not **dirty** as this reduces the efficiency of the de-icing function. – **The de-icing control is only authorised when the engine is running to save power.** **Rear screen de-icing can be activated in two ways:** – Pressing the lower part of the de-icing switch on the control panel activates the heated rear screen and the door mirrors. – Pressing the upper part of the heating switch on the control panel operates the See clear function (heated rear screen and door mirrors, ventilated windscreen and electrically heated windscreen, if fitted to the vehicle). Note: **In both instances de-icing activation is only authorised with the engine running.**

Ensure that there are no water leaks in the passenger compartment which would significantly increase the moisture and reduce the effectiveness of the demisting function.
Repair if necessary (see **ALP 14**).

Is the fault still present?

NO → **End of fault finding procedure.**

YES

↓

Use the diagnostic tool to check the heated rear screen relay control, by checking status **ET022 Heated rear screen control**.
Repair if necessary (see **ET022**).

↓

(A)

AFTER REPAIR	Check that the system is operating correctly.

GETtheMANUALS.org

ALP 5 CONTINUED	

(A)

Remove the plastic pillars from the rear screen and check that **the heating wires have not been cut** by measuring their resistance (**0.5 to 1Ω**).
Repair if necessary.

Check for an **earth** on the terminal located on the right-hand side of the heated rear screen and **+ 12 V** (when the de-icing is switched on) on the left-hand side terminal.
If there is no supply to the screen, check **the continuity and absence of interference resistance** of the connection between:

Rear screen relay **track 5** → heated rear screen left-hand terminal connector

Repair if necessary.
If the fault is still present, **apply the fault finding procedure** for fault **ET022 Heated rear screen control**.

Is the fault still present?

YES

Carry out a **conformity check** as the fault may result from an incorrect signal from the external temperature sensor.
Check that the interior air temperature sensor micro-turbine is in correct working order (if it is faulty it may falsify the measurement).
Replace any faulty components.

NO

End of fault finding procedure.

AFTER REPAIR	Check that the system is operating correctly.

GETtheMANUALS.org

ALP 6	Inefficient ventilation

NOTES	Only check the customer complaint after **a complete check with the diagnostic tool**.

Is the **air flow** correct?
— **NO** → See **ALP 2** and **ALP 3**.

YES ↓

Is the **air distribution** correct?
— **NO** → See **ALP 1**.

YES ↓

End of fault finding procedure.

AFTER REPAIR	Check that the system is operating correctly.

GETtheMANUALS.org

ALP 7	No front passenger compartment fan

NOTES	Only consult this customer complaint after **a complete check with the diagnostic tool**.

Check that the **fuses** are in good condition.

Using the diagnostic tool, check that the fan unit control setpoint given by the computer varies from 0 to 100 % by checking parameter **PR019 Passenger compartment fan PWM setpoint**.

Does the value vary?

NO → Replace the control panel.

YES

Check that the **PWM modulated control** (modulated control voltage) of the passenger compartment fan unit power module varies between 0 and 6 V (from 0 to 100 %) by measuring between track A3 of the module and earth (connector connected).
Note:
For a greater degree of accuracy, refer to the HELP section when taking the measurement.

Does the voltage vary correctly?

YES

NO

Connect the bornier in place of the computer and check the **insulation, continuity and absence of interference resistance** of the following connections:

computer connector A **track 27** → **track A3** of the front fan unit power module
computer connector A **track 13** → **track A2** of the front fan unit power module

Repair if necessary.

With the ignition on, check for **+ 12 V** on track **B5** and **earth** on track **B4** of the black 2 x 5 track connector of the blower unit (screwed under the glove compartment on the console base side).
Repair if necessary.

(A)

AFTER REPAIR	Check that the system is operating correctly.

GETtheMANUALS.org

ALP 7 CONTINUED	

A

Check the **insulation, continuity and interference resistance** on the following connections:

black 2 x 5-track connector	**black 4-track connector of the power module**
track B1	**track A3**
track B2	**track A2**
track B3	**track A4**
track B5	**track A1**
track B4	**black 2-track fan connector**
	track A
	track B
	blue 2-track connector of the power module
	track A
	track B

Repair if necessary.

Check that the passenger compartment fan blades have not **broken or come away** from their shaft. Ensure that there are no foreign bodies blocking the fan.
Repair or replace the passenger compartment fan if necessary.

Disconnect the fan unit black 2-track connector and **check the resistance of the motor** across tracks A and B. Replace the fan unit if there is zero or infinite resistance.

Is the fault still present?

NO → End of fault finding procedure.

YES

Replace the power module.

AFTER REPAIR	Check that the system is operating correctly.

GETtheMANUALS.org

ALP 8	No rear passenger compartment fan

NOTES	Only check the customer complaint after **a complete check with the diagnostic tool**.

Check that the **fuses** are in good condition.

With the ignition on, check for 12 V feed on **track B1** of the rear fan control unit.

Is there a feed?

YES

NO

Check the **insulation, continuity and absence of interference resistance** on the following connection:

Rear control unit — **Track B1** → **Rear fan unit relay** — **Track A5**

Repair if necessary.

With the ignition on, check for + 12 volts feed on **track A1** and **A3** of the rear fan unit relay and an earth on **track A2**.
Repair if necessary (see wiring diagram).

Check that the rear fan unit relay is in correct working order.
Replace the relay if necessary.

Using an ohmmeter, check that the rear fan control unit is operating correctly:
Speed 1: Continuity between **track B1** and **track A1**.
Speed 2: Continuity between **track B1** and **track B2**.
Speed 3: Continuity between **track B1** and **track B3**.
Replace the rear fan unit control unit if necessary.

(A)

AFTER REPAIR	Check that the system is operating correctly.

GETtheMANUALS.org

ALP 8 CONTINUED 1	

(A)

Check the **insulation, continuity and absence of interference resistance** of the following connections:
- Rear control unit **Track D** → **Track B3** of the resistor unit
- Rear control unit **Track A** → **Track B2** of the resistor unit
- Rear control unit **Track C** → **Track A1** of the resistor unit

Repair if necessary.

Check the resistances of the rear fan resistor unit (**± 0.5 Ω**):

– V1: **5.0 Ω** (tracks C and B) – V2: **2.4 Ω** (tracks A and B) – V3: **0.8 Ω** (tracks D and B)

Replace the resistor unit if the values measured do not correspond to those given above.

Check the consistency of the rear fan unit control voltages according to the 3 control speeds: Measure between **track 2** of the black 6-track intermediary connector and **earth** (refer to the HELP section for information on taking the measurement).

Are the voltages correct?

YES →

NO ↓

Check the **insulation, continuity and absence of interference resistance** on the following connection:

Resistor unit	Black 6-track intermediary connector	Climate control computer connector A (grey, 30-track)
Track B	Track 2	Track 20

Repair if necessary.
If the connection is correct (or after adjusting it), disconnect the connector from **track A** of the fan unit and repeat the previous test.

Are the voltages correct?

NO ↓

Replace the resistor unit.

YES ↓

(B)

AFTER REPAIR	Check that the system is operating correctly.

GETtheMANUALS.org

ALP 8 CONTINUED 2	

B

Check for an **earth** on **track 3** of the black 6-track intermediary connector.
Repair if necessary.

Check the **insulation, continuity and absence of interference resistance** of the following connection:
Black 6-track intermediary connector

Track 3 → **Track 2** of the rear fan unit relay
→ **Track A2** of the rear control panel
→ **Track B** of the rear fan unit

Repair if necessary.

Check that the rear fan unit blades have not **broken or come away** from their shaft.
Ensure that there are no foreign bodies blocking the fan.
Repair or replace the passenger compartment fan if necessary.

Disconnect the black 2-track connector from the rear fan and **check the resistance of the motor** across **tracks A** and **B**.
Replace the fan if the resistance is zero or infinite.

End of fault finding procedure.

AFTER REPAIR	Check that the system is operating correctly.

GETtheMANUALS.org

ALP 9	No heating or inadequate heating

NOTES	Only check the customer complaint after **a complete check with the diagnostic tool**.

Is the **air flow** correct?
- **NO** → See **ALP 2**, air flow fault.
- **YES** ↓

Is the **air distribution** correct?
- **NO** → See **ALP 1**, air distribution fault.
- **YES** ↓

With a warm engine, set the heating to max.
Is the air supplied hot?
- **YES** → If necessary, explain how the system works to the customer again.
- **NO** ↓

Using the diagnostic tool, check the air mixing control by checking the mixing motor parameters.
PR020 Left-hand mixing flap position
PR021 Right-hand mixing flap position

Do the flaps open fully? (maximum heat position: 100 % displayed on tool)
- **NO** → Run **a conformity check** on the mixing motors.
  In the event of a fault, refer to the mixing motor diagnostic procedures in the Technical Note (**DF018** and **DF019**).

  Is the fault still present?
  - **YES** → Run a **conformity check** on the sensors as the problem may arise from a faulty signal from one of the sensors (temperature/humidity, etc.). Check that the interior air temperature sensor micro-turbine is in correct working order (if it is faulty it may falsify the measurement). Replace any faulty components.
  - **NO** → **End of fault finding procedure.**
- **YES** ↓

Run a **conformity check** on the sensors as the problem may arise from a faulty signal from one of the sensors (temperature/humidity, etc.). Check that the interior air temperature sensor micro-turbine is in correct working order (if it is faulty it may falsify the measurement). Replace any faulty components.

↓ (A)

AFTER REPAIR	Check that the system is operating correctly.

GETtheMANUALS.org

ALP 9 CONTINUED	

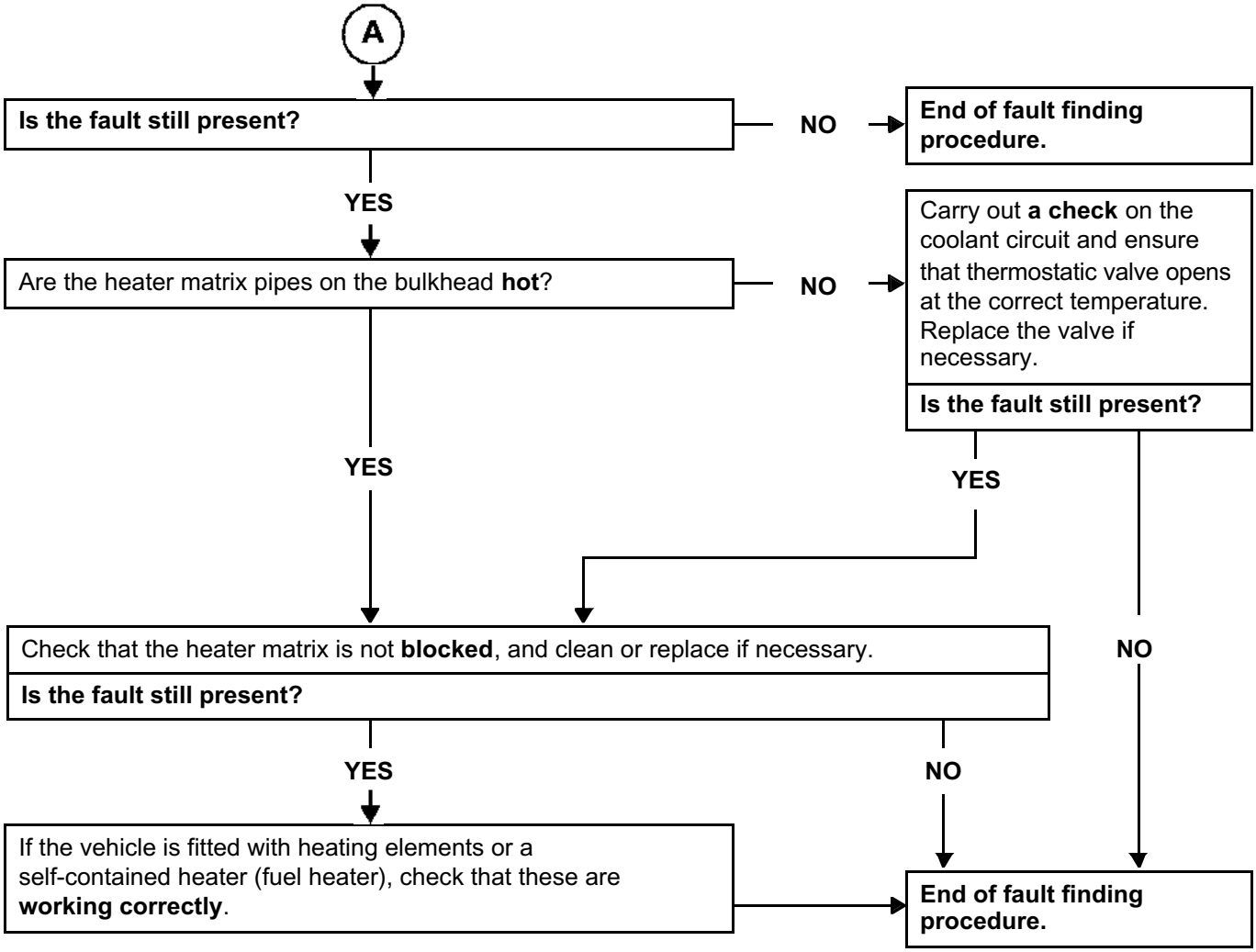

AFTER REPAIR	Check that the system is operating correctly.

GETtheMANUALS.org

ALP 10	Too much hot air

NOTES	Only check the customer complaint after **a complete check with the diagnostic tool**.

Is the **air flow** correct?
- **NO** → See **ALP 2**, Air flow problem
- **YES** ↓

Is the **air distribution** correct?
- **NO** → See **ALP 1**, air distribution fault.
- **YES** ↓

Using the diagnostic tool, check the air mixing control by checking the mixing motor parameters.
- **PR020** → **Position of left-hand mixing flap**
- **PR021** → **Position of right-hand mixing flap**

Do the flaps open fully? (maximum heat position: 100 % displayed on tool)
- **NO** → Run **a conformity check** on the mixing motors. In the event of a fault, refer to the mixing motor diagnostic procedures in the Technical Note (**DF018** and **DF019**).

Is the fault still present?
- **YES** → ↓
- **NO** → **End of fault finding procedure.**

YES ↓

Run a **conformity check** on the sensors as the problem may arise from a faulty signal from one of the sensors (temperature/humidity, etc.). Check that the interior air temperature sensor micro-turbine is in correct working order (if it is faulty it may falsify the measurement). Replace any faulty components.

↓ (A)

AFTER REPAIR	Check that the system is operating correctly.

GETtheMANUALS.org

ALP 10 CONTINUED	

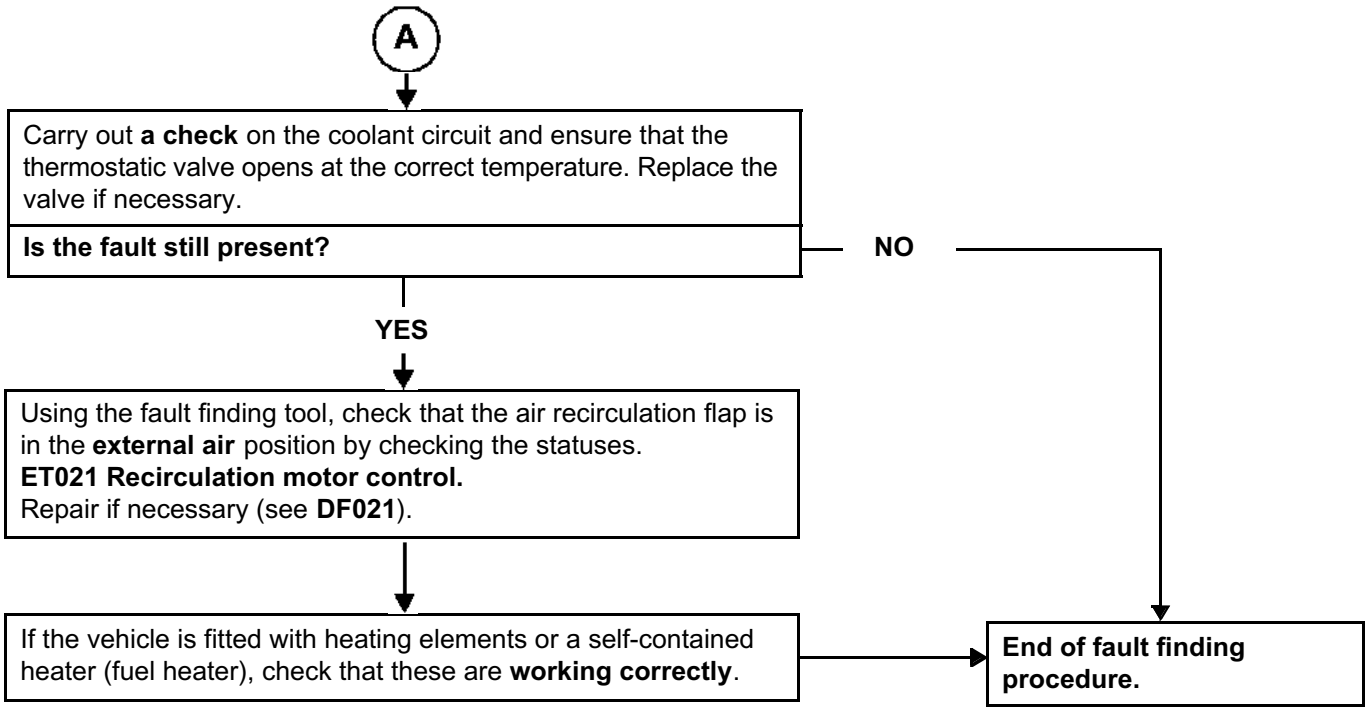

AFTER REPAIR	Check that the system is operating correctly.

GETtheMANUALS.org

ALP 11	No cold air

NOTES	Only refer to this customer complaint after a **complete check using the diagnostic tool**

Start the engine, switch on the climate control (compressor engaged by pressing and holding AC button) with a very cold temperature request (minimum position on the left and right). Using the fault finding tool, display status **ET140 Air conditioning request**; this status should display **YES**.

Is the status YES?

NO → Carry out **a conformity check**, referring mainly to the sensor temperature values (evaporator temperature, interior air temperature, the refrigerant fluid pressure, etc.)

YES ↓

Using the diagnostic tool and with the engine at idle speed, check that the injection computer authorises air conditioning.
The status **ET003 AC inhibited by the injection computer** should display **NO**.

Is the correct status displayed?

NO → Carry out **fault finding on the injection** (faulty injection leading to a substandard performance may prevent the climate control from functioning). Ensure that the fan unit motor is in correct working order. Repair if necessary.

YES ↓

Check the condition of the **climate control compressor belt**.
Replace it if necessary and check the **tension**.

Is the tension correct?

NO → **Replace** the belt (refer to the repair procedures).

YES ↓

(A)

AFTER REPAIR	Check that the system is operating correctly.

GETtheMANUALS.org

ALP 11 CONTINUED 1	

(A)

Using the diagnostic tool, select command **AC021 Compressor clutch**.

Does the compressor clutch stick? — **YES** →

NO ↓

Check for **+ 12 V** on **track B** (**track 2** on the V4Y engine) of the compressor clutch and on **track B** of the variable capacity control solenoid valve (not the electric control solenoid valve on the V4Y and P9X engines).
Repair if necessary.

Connect the bornier in place of the computer and check the **insulation, continuity and the absence of interference resistance** on the following connections:

computer connector A **track 15** → **track A** of the compressor clutch
computer connector A **track 7** → **track A** of the variable capacity control solenoid valve.

Repair if necessary

Vary the position of the left-hand and right-hand mixing flaps from very cold to very hot (from minimum temperature position to maximum temperature position) and check subjectively whether there is a difference in temperature.

Can you feel the difference in temperature? — **NO** → Run **a conformity check** on the mixing motors. In the event of a fault, refer to the mixing motor diagnostic procedures in the Technical Note (**DF018** and **DF019**).

YES ↓

(B)

AFTER REPAIR	Check that the system is operating correctly.

GETtheMANUALS.org

ALP 11

CONTINUED 2

B

Check the cold loop by examining the condition of the pipes and ensuring that the climate control system is not **leaking refrigerant** (carry out the check with the engine cold and then hot, using the electronic buzzer or a leak detecting product to avoid charging the climate control system twice in succession).
Repair if necessary.

Check that the condenser is clean (no leaves, mud, etc.).
Clean the condenser if necessary.

With the climate control switched on (on a very cold setting), touch the refrigerant pipe between the calibrated choke and the evaporator to make sure that it is **very cold**.

Is the refrigerant pipe cold?

NO → Check that there is a **calibrated jet**.

Is the calibrated jet present?

YES → **Replace the calibrated choke**

NO → **Replace the pipe** (between the condenser outlet and the evaporator inlet).

YES (from "Is the refrigerant pipe cold?")

Top up the refrigerant, referring to the Workshop Repair Manual (650 g ± 25 g).

Is the fault still present?

YES → Replace the compressor

NO → **End of fault finding procedure.**

AFTER REPAIR	Check that the system is operating correctly.

GETtheMANUALS.org

ALP 12	Too much cold air

NOTES	Only consult this customer complaint after a **complete check with the diagnostic tool**.

Start the engine and switch on the climate control system (engage the compressor by pressing the AC button):
Does the compressor operate?

YES

NO

Use the diagnostic tool to display the evaporator temperature (**PR003**), with the climate control operational. Does the temperature drop below 0 ˚C (the point at which the compressor clutch is disengaged)?

YES

Does the compressor clutch disengage when the temperature is below 0 ˚C? (1 minute delay).

YES

NO

If the compressor is not faulty and there are no mechanical faults on the compressor clutch, replace the climate control computer.

NO

Ensure that **the evaporator temperature sensor** is in the correct position (it is inserted approximately 20 mm into the evaporator air outlet).

Check **the resistance** of the evaporator sensor between **track 1** and **track 2** of the sensor.
Replace the sensor if the resistance is not approximately:
30 KΩ at 25 ˚C.

Is the fault still present?

NO

End of fault finding procedure.

A

AFTER REPAIR	Check that the system is operating correctly.

GETtheMANUALS.org

ALP 12 CONTINUED	

(A)

Run a **conformity check** on the sensors as the problem may arise from a faulty signal from one of the sensors (interior temperature, external temperature, engine coolant temperature, evaporator temperature, etc.). Check that the interior air temperature sensor micro-turbine is in correct working order (if it is faulty it may falsify the measurement).
Replace any faulty components.

↓

Using the fault finding tool, examine the air mixer control by checking the mixing motor parameters.
PR020 Left-hand mixing flap position
PR021 Right-hand mixing flap position

Is the mixing correct?
(0 % maximum cold, 100 % maximum heat)

NO → Run **a conformity check** on the mixing motors.
In the event of a fault, refer to the mixing motor diagnostic procedures in the Technical Note (**DF018** and **DF019**).

YES

↓

Check the refrigerant level.

AFTER REPAIR	Check that the system is operating correctly.

GETtheMANUALS.org

ALP 13	Unpleasant odours in the passenger compartment

NOTES	Only check the customer complaint after a complete check with the diagnostic tool.

Check that the cabin filter is not blocked or damaged.
Replace it if necessary.

Is the fault still present?

NO → **End of fault finding procedure.**

YES ↓

Check that the condensate **drain pipe** (water from the evaporator) is not blocked.
Repair if necessary.

Is the fault still present?

NO → **End of fault finding procedure.**

YES ↓

Check that **the heating unit is completely sealed and there are no leaks** into the engine compartment.
Repair if necessary.

Is the fault still present?

NO → **End of fault finding procedure.**

YES ↓

Place the vehicle on a lift.
Apply the climate control cleaning product using the extension piece through the condensation (evaporator water evacuation pipe) outlet pipe.
Spray the entire contents of the aerosol.
Leave the product to work for **15 minutes**.

AFTER REPAIR	Check that the system is operating correctly.

GETtheMANUALS.org

ALP 14	Water is present in the passenger compartment

NOTES	Only refer to this customer complaint section after a complete check using the diagnostic tool.

Pressurize the cooling circuit.

Is there any coolant leaking into the vehicle? — **YES** → **Repair.**

NO

Check that the condensation **evacuation pipe** (water from the evaporator) is not blocked.
Repair if necessary.

Is the fault still present? — **NO** → **End of fault finding procedure.**

YES

The fault may be caused by **ice** in the evaporator.
Does the customer complain of water droplets coming out of the air vents? — **NO** → The leak is not coming from the air conditioning system.

YES

Use the diagnostic tool to display the evaporator temperature (**PR003**). Does it seem consistent? (in normal operation, temperature should be > **0 °C**, and the compressor should disengage for one minute when it falls below this value). — **YES** → Run a **conformity check** as the fault may arise from a faulty signal from one of the sensors (temperature/ humidity, etc.).
Replace any faulty components.

NO

Ensure that **the evaporator temperature sensor** is in the correct position (it is inserted approximately 20 mm into the evaporator air output).

→ **End of fault finding procedure.**

AFTER REPAIR	Check that the system is operating correctly.

GETtheMANUALS.org

ALP 15	No front control panel lighting

NOTES	Only follow up this customer complaint after a full check of the multiplex network and the air conditioning with the diagnostic tool.
	Special notes: The control panel is permanently lit but the buttons only light up when the side lights are switched on.
	Note: A delay in the climate control panel lighting could be due to an external temperature sensor malfunction.

Check the **connection and condition** of the computer output connectors.
Connect the bornier in place of the computer and check **the insulation, continuity and absence of interference resistance** of the following connections:

computer connector A **track 14** → **track 2** of the lighting dimmer

earth → **track 3** of the dimmer

Repair if necessary.

Is the fault still present?

NO → **End of fault finding procedure.**

YES

Check the **resistance** value of the dimmer by measuring across: **track 2** and **track 3** of the dimmer connector.
When the dimmer is operated, its resistance should vary between **0 and 1000 Ω** ± 5 %.
Replace the lighting dimmer if this is not the case.

Is the fault still present?

NO → **End of fault finding procedure.**

YES

(A)

AFTER REPAIR	Check that the system is operating correctly.

GETtheMANUALS.org

ALP 15 CONTINUED	

(A)

Connect the bornier in place of the computer and check the **insulation, continuity and absence of interference resistance** of the connection:

computer connector A **track 2** → **+ side lights feed (see diagram for the vehicle and model year concerned)**

Repair if necessary.

Is the fault still present?

YES

Check the passenger compartment connection unit with the diagnostic tool.
Check that the side light command status changes to active when the lights switch on.
If this does not occur, refer to the **UCH fault finding** procedure, or run **fault finding on the multiplex network**.

Is the fault still present?

NO → **End of fault finding procedure.**

YES

Replace the computer (control panel).

NO

AFTER REPAIR	Check that the system is operating correctly.

GETtheMANUALS.org

ALP 16	No rear control panel lighting

NOTES	**Special notes:** The control panel only lights up when the side lights are switched on.

Check the condition of the fuses.
Repair if necessary.

↓

Check the condition of the bulb.
Repair if necessary.

↓

Check the **connection and condition** of the rear fan control unit connector. Check the **insulation, continuity and absence of interference resistance** of the following connections:

track A3 of the control unit → **UCH** (see diagram)
track A2 of the control unit → **earth**

Repair if necessary.

↓

Check for 12 V feed on **track A3** of the rear fan control unit.

Is there a 12 V supply? — **YES** → **End of fault finding procedure.**

NO

↓

Carry out fault finding on the UCH.

AFTER REPAIR	Check that the system is operating correctly.

GETtheMANUALS.org

ALP 17	Noisy compressor

NOTES	Only consult this customer complaint after a complete check with the diagnostic tool.

Using the screen for reading configurations on the diagnostic tool, check that **the drive ratio and compressor type match the vehicle equipment** by displaying the following information:
The **LC036 Read drive ratio** information should indicate the type of engine fitted to the vehicle (the engine is associated with a drive ratio).
The information **LC012 Compressor type** information should indicate the type of compressor fitted to the vehicle.
Reconfigure the climate control computer if necessary.

↓

Check that the compressor **belt is in good condition** and **check its tension** (for engines without automatic tensioner).
Replace the belt if necessary.

↓

Check that the compressor is **correctly mounted**.
Repair if necessary.

↓

Check **the refrigerant level** and look for leaks as the compressor may become noisy if a significant volume of fluid is lost.
Refill if necessary.

↓

For compressors fitted with an electric compressor capacity control valve (except V4Y and P9X engines), connect the bornier in place of the computer and check the **insulation, continuity and absence of interference resistance** of the following connection:
computer connector A **track 7** ⟶ **track A** of the variable capacity control solenoid valve.
Repair if necessary.

↓

If the fault is still present, **replace** the air conditioning compressor.

AFTER REPAIR	Check that the system is operating correctly.

GETtheMANUALS.org

VEL SATIS

8 Electrical equipment

80C XENON LAMPS

ABBREVIATIONS	80C - 1
Fault finding - Introduction	80C - 2
Fault finding - Fault Interpretation	80C - 3
Fault finding - Help	80C - 16
Fault finding - Conformity check	80C - 19
Fault finding - Parameter interpretation	80C - 21
Fault finding - Command interpretation	80C - 23

BJ0E - BJ0J - BJ0K - BJ0M - BJ0P - BJ0V

77 11 311 302 **FEBRUARY 2006** **EDITION ANGLAISE**

"The repair procedures given by the manufacturer in this document are based on the technical specifications current when it was prepared.

The methods may be modified as a result of changes introduced by the manufacturer in the production of the various component units and accessories from which his vehicles are constructed."

All rights reserved by Renault s.a.s.

Copying or translating, in part or in full, of this document or use of the service part reference numbering system is forbidden without the prior written authority of Renault s.a.s.

© Renault s.a.s. 2006

GETtheMANUALS.org

ABBREVIATIONS	MEANING OF ABBREVIATION
ABS	Anti-lock braking system
ALP	Fault finding chart
APC	After ignition
AVC	Before ignition
BVA	Automatic gearbox
BVM	Manual gearbox
BVR	Sequential gearbox
CAN	Controller Area Network
AC	Air conditioning
CD	Compact disc
PAS	Power assisted steering (hydraulic)
EPAS	Electric power assisted steering
DVD	Digital versatile disc
DTC	Fault finding code
EGR	Exhaust gas recirculation
ESP	Electronic Stability Program
GMV	Motor-driven fan assembly
CNG	Compressed natural gas
LPG	Liquefied petroleum gas
HLE	High yield strength
MAG	Metal active gas (for welding steel)
MIG	Metal inert gas (for welding aluminium)
MR	Workshop repair manual
TN	Technical Note
OBD	On board diagnostics
SER	Resistance welding
SSPP	Tyre pressure monitoring system
THLE	Very high yield strength
TM	Labour time
UCH	Passenger compartment unit
UPC	Protection and switching unit
UCT	Roof control unit
UHLE	Ultra high yield strength
VIN	Vehicle identification number

GETtheMANUALS.org

This document presents the fault finding procedures applicable to all Xenon lamp computers fitted on the VEL SATIS.

To run diagnostics on this system, it is essential have the following items:

- **The Workshop Repair Manual for the vehicle concerned,**
- **The circuit diagram for the function of the vehicle concerned,**
- **The tools listed under the heading Special tooling required.**

GENERAL APPROACH TO FAULT FINDING

– Use of one of the diagnostic tools to identify the system installed in the vehicle (reading the type of xenon lamp computer).

– Locate the Fault finding documents corresponding to the system identified.

– Refer to the information in the Introduction.

– Read the faults stored in the computer memory and refer to the Fault interpretation section of the documents.

Reminder: Each fault is interpreted for a particular type of storage (fault present, fault stored in memory, fault present or stored). The specified checks for dealing with each fault are therefore only to be performed if the fault declared by the diagnostic tool can be identified in the document by its type. The way in which the fault is stored should be considered when using the diagnostic tool following switching off and switching on the ignition again
If a fault is interpreted when it is declared stored, the conditions for application of the diagnostic routine appear in the NOTES box. When these conditions are not satisfied, use the fault finding procedure to check the circuit of the faulty part, since the fault is no longer present on the vehicle. Perform the same operation when a fault is declared as stored by the diagnostic tool but is only interpreted in the documentation as a present fault.

– Carry out the conformity check (appearance of possible faults not yet identified by the system's auto-diagnostic procedure) and apply the relevant fault finding strategies according to the results.

– Confirm the repair (problem reported by customer disappears).

SPECIAL TOOLING REQUIRED FOR WORKING ON THE DISCHARGE LAMP SYSTEM:

– **Diagnostic tools: CLIP or NXR (only).**
– **Multimeter.**
– **Headlight beam adjuster.**

GETtheMANUALS.org

DF001 PRESENT OR STORED	COMPUTER 1.DEF : Replace the computer.

NOTES	**Conditions for applying the fault finding procedure to stored faults:** Where the fault reappears as present following: – clearance of the fault, – the ignition being switched off and on again.

Replace the computer/front sensor (see illustration in the **Help** section) by following:
- the removal method specified in **section 80** of the Workshop Repair Manual.
- the programming and calibration procedures specified in the **Help** section.

AFTER REPAIR	Deal with any other possible faults. Erase the stored faults. Switch off the ignition and carry out a road test followed by a test using the diagnostic tool.

GETtheMANUALS.org

DF005 PRESENT OR STORED	ACTUATORS 1.DEF : Internal electronic fault.

NOTES	**Conditions for applying the fault finding procedure to stored faults:** Where the fault reappears as present following: – clearance of the fault, – the ignition being switched off and on again followed by dipped headlights being switched on.

Park the vehicle facing a wall. Switch off the ignition. Switch on the ignition and turn on the dipped headlights.

Replace the lens unit actuator which is not operating correctly (light beam moving downwards, then to the correct height, just after switching on the ignition), following the actuator replacement method specified in **section 80** of the Workshop Repair Manual.

Then enter command **AC012**: Actuator high and low positions, to check that they are functioning correctly.

Adjust the lights using a headlight beam angle adjuster.

AFTER REPAIR	Deal with any other possible faults. Erase the stored faults. Switch off the ignition and carry out a road test followed by a test using the diagnostic tool.

GETtheMANUALS.org

DF009 PRESENT OR STORED	REAR HEIGHT SENSOR CIRCUIT CC.0 : Short circuit to earth CC.1 : Short-circuit to **+12 volts** CO : Open circuit, absence of signal.

NOTES	**Conditions for applying the fault finding procedure to stored faults:** If the fault is declared present after: – clearance of the fault, – switching the ignition off and on again. **Special notes:** If a system component is replaced, it is essential to follow the calibration procedure specified in the **Help** section.

CC.0	***NOTES***	None

Check the Xenon lamp computer connections, repair if necessary.
Check the rear sensor connections, repair if necessary (**see illustration in Help section).**
Check the condition of the rear sensor harness (pinching/kinking, continuity, etc.). Repair if necessary.
Ensure continuity and insulation **against earth** to the connection between:
Front sensor computer **track 3** ⟶ Rear height sensor **track 6**
Also ensure continuity of the connection between:
Front sensor computer **track 8** ⟶ Rear height sensor **track 5**
If the problem persists, replace the rear sensor.

CC.1	***NOTES***	None

Check the computer connections, repair if necessary.
Check the rear sensor connections, repair if necessary.
Check the condition of the rear sensor harness (pinching/kinking, continuity, etc.). Repair if necessary.
Ensure continuity and insulation **from + 12 volts** of the connection between:
Front sensor computer **track 3** ⟶ Rear height sensor **track 6**
If the problem persists, replace the rear sensor.

AFTER REPAIR	Deal with any other possible faults. Erase the stored faults. Switch off the ignition and carry out a road test followed by a test using the diagnostic tool.

GETtheMANUALS.org

DF009 **CONTD.**	REAR HEIGHT SENSOR CIRCUIT

CO	***NOTES***	See general instructions on previous pages.

Check the Xenon lamp computer connections, repair if necessary.
Check the rear sensor connections, repair if necessary.
Check the condition of the rear sensor harness (pinching/kinking, continuity, etc.). Repair if necessary.
Ensure **continuity** of the connection between:
Front sensor computer **track 3** ⟶ Rear height sensor **track 6**
If the problem persists, replace the rear sensor.

AFTER REPAIR	Deal with any other possible faults. Erase the stored faults. Switch off the ignition and carry out a road test followed by a test using the diagnostic tool.

GETtheMANUALS.org

DF010 PRESENT OR STORED	REAR SENSOR SIGNAL 1.DEF : Frequency outside permitted values. 2.DEF : Signal outside permitted values on initialisation. 3.DEF : Signal constant. 4.DEF : Signal outside lower limit. 5.DEF : Signal outside upper limit.

NOTES	**Conditions for applying the fault finding procedure to stored faults:** If the fault is declared present after: – clearance of the fault, – switching the ignition off and on again. **Special notes:** If a system component is replaced, it is essential to follow the calibration procedure specified in the Help section.

1.DEF	***NOTES***	**Special notes:** The frequency of the signal sent to the computer is **200 Hz ± 25%**

Check the Xenon lamp computer connections, repair if necessary.
Check the rear sensor connections, repair if necessary.
Check the condition of the rear sensor harness (pinching/kinking, continuity, etc.). Repair if necessary.
Ensure **the continuity** and insulation against **+12 volts** of the connection between:
Front sensor computer **track 3** ⟶ **track 6** rear sensor connector
Ensure good earthing connections.
If the problem persists, replace the rear sensor (see the removal and refitting method specified in **section 80** of the Workshop Repair Manual).

2.DEF ***4.DEF*** ***5.DEF***	***NOTES***	**Conditions for applying the fault finding procedure to stored faults:** Where the fault is declared present following clearing of the fault and a road test. **Special notes:** Vehicle not on lift, jack or axle stand.

The sensor is fitted with upper and lower stops, these faults can only occur following a severe impact to the axle or sensor mounting:
Ensure there is a mechanical connection between the sensor and the axle via the lever arm and the control lever. Repair if necessary.
Check that the control lever is in good condition. Replace if necessary.
Check the condition of the rear sensor mounting and its upper and lower stops. Replace if necessary.
If the control lever has not exceeded its upper and lower stops, and the mounting does not show signs of deformation, replace the rear sensor (see removal and refitting method specified in **section 80** of the Workshop Repair Manual).

AFTER REPAIR	Deal with any other possible faults. Erase the stored faults. Switch off the ignition and carry out a road test followed by a test using the diagnostic tool.

GETtheMANUALS.org

DF010 **CONTD.**	REAR SENSOR SIGNAL

3.DEF	***NOTES***	**Conditions for applying the fault finding procedure to stored faults:** If the fault is declared present following clearance of the fault and a road test with the dipped headlights on.

Ensure there is a mechanical connection between the sensor and the axle via the lever arm and the control lever. Repair if necessary.
If the fault persists, replace the rear sensor.

AFTER REPAIR	Deal with any other possible faults. Erase the stored faults. Switch off the ignition and carry out a road test followed by a test using the diagnostic tool.

GETtheMANUALS.org

DF011 PRESENT OR STORED	FRONT SENSOR SIGNAL 1.DEF : Signal outside permitted values on initialisation. 2.DEF : Signal constant. 3.DEF : Signal outside lower limit. 4.DEF : Signal outside upper limit. 5.DEF : Internal electronic fault.

NOTES	**Special notes:** If the front sensor/computer has to be replaced, follow the removal method specified in **section 80** of the Workshop Repair Manual, and apply the programming and calibration procedures specified in the Help section

1.DEF	***NOTES***	**Conditions for applying the fault finding procedure to stored faults:** If the fault reappears stored after: – clearance of the fault, – switching the ignition off and on again.

Perform a configuration read to check that the computer has been programmed correctly.
Modify the programming if necessary. (See procedure in the Help section)
Ensure there is a mechanical connection between the sensor and the axle via the lever arm and the control lever. Repair if necessary.
Check that the control lever is in good condition. Replace if necessary.
Check the condition of the front sensor mounting and its upper and lower stops. Replace if necessary.
Perform a calibration, refer to the **help** section for information on this procedure.If there is still a fault, and:
– the control lever has not exceeded its stops,
– the mounting shows no sign of deformation.
then replace the sensor/ front computer

2.DEF	***NOTES***	**Conditions for applying the fault finding procedure to stored faults:** If the fault is declared present following clearance of the fault and a road test.

Ensure there is a mechanical connection between the sensor and the axle via the lever arm and the control lever. Repair if necessary.
If the fault persists, replace the sensor/front computer

AFTER REPAIR	Deal with any other possible faults. Erase the stored faults. Switch off the ignition and carry out a road test followed by a test using the diagnostic tool.

GETtheMANUALS.org

DF011 **CONTD.**	

4.DEF ***3.DEF***	***NOTES***	**Conditions for applying the fault finding procedure to stored faults:** If the fault is declared present after: – clearance of the fault, – switching the ignition off and on again.

The sensor is fitted with upper and lower stops, these faults can only occur following a severe impact to:
– the front axle, or
– to the sensor mounting.
Ensure there is a mechanical connection between the sensor and the axle via the lever arm and the control lever. Repair if necessary.
Check that the control lever is in good condition. Replace if necessary.
Check the condition of the front sensor mounting and its upper and lower stops. Replace if necessary.
If the control lever has not exceeded its upper and lower stops, and the mounting shows no signs of deformation, replace the front sensor.

5.DEF	***NOTES***	**Conditions for applying the fault finding procedure to stored faults:** If the fault is declared present after: – clearance of the fault, – switching the ignition off and on again.

Change the sensor/front computer.

AFTER REPAIR	Deal with any other possible faults. Erase the stored faults. Switch off the ignition and carry out a road test followed by a test using the diagnostic tool.

GETtheMANUALS.org

DF012 PRESENT OR STORED	COMPUTER CONNECTIONS 1.CO : Dipped beam signal line in open circuit. 2.CO : Actuator control line in open circuit. CC.0 : Actuator control line in short circuit to earth. CC.1 : Actuator control line in short circuit to **+ 12 volts**.

NOTES	**Conditions for applying the fault finding procedure to stored faults:** If the fault reappears stored after: – clearance of the fault memory and – actuator control **AC007 or AC008 or AC012 - high, low, high and low actuator control positions.**

1.CO	***NOTES***	**Conditions for application of the diagnostic:** **Only if the fault is present** when the dipped headlights are on.

Check the Xenon lamp computer connections, repair if necessary.

Check the UCH connections, repair if necessary.

Ensure **continuity of the connection** between:

Discharge lamp computer connector **track 6** → track **3B2** UCH black connector

Ensure fuse **F7** (**15A**) on the UCH is intact

2.CO	***NOTES***	None

Check the computer connections, repair if necessary.

Check the actuator connections. Repair if necessary.

Ensure **continuity of the connections** between:

sensor/front computer connector **track 7** → **track 2** Left lens unit actuator connector

→ **track 2** Right lens unit actuator connector

Carry out the required repairs.

AFTER REPAIR	Deal with any other possible faults. Erase the stored faults. Switch off the ignition and carry out a road test followed by a test using the diagnostic tool.

GETtheMANUALS.org

DF012 **CONTD.**	COMPUTER CONNECTIONS

CC.0	***NOTES***	**Conditions for applying the fault finding procedure to stored faults:** If the fault reappears stored after: – the fault memory is cleared – actuator control **AC007 or AC008 or AC 012 - high, low, high and low actuator positions.**

Check the Xenon lamp computer connections, repair if necessary.

Check the actuator connections. Repair if necessary.

Ensure the continuity and insulation against earth of the connections between:

Sensor connector/front computer **track 7** → **track 2** Left lens unit actuator connector

→ **track 2** Right lens unit actuator connector

Carry out the required repairs.

CC.1	***NOTES***	**Conditions for applying the fault finding procedure to stored faults:** If the fault reappears stored after: – the fault memory is cleared – actuator control **AC007 or AC008 or AC 012 - high, low, high and low actuator positions.**

Check the Xenon lamp computer connections, repair if necessary.

Check the actuator connections, repair if necessary.

Ensure the following connections are insulated against **+ 12 volts**:

Sensor connector/ front computer **track 7** → **track 2** Left lens unit actuator connector

→ **track 2** Right lens unit actuator connector

Carry out the required repairs.

AFTER REPAIR	Deal with any other possible faults. Erase the stored faults. Switch off the ignition and carry out a road test followed by a test using the diagnostic tool.

GETtheMANUALS.org

DF013 PRESENT OR STORED	VEHICLE SPEED SIGNAL 1.DEF : Error in speed information coming from the ABS.

1.DEF	***NOTES***	**Conditions for applying the fault finding procedure to stored faults:** If the fault is declared present after: Clearance of fault memory and a road test.

Check the Xenon lamp computer connections. Repair if necessary.
Check the ABS/ESP computer connections.Repair if necessary.
Check that the ABS or ESP fuse is intact: (F10 - 30A, on engine fuse and relay unit).
Ensure the continuity and insulation against **earth** of the connection between:
Sensor connector/front computer **track 4** ⟶ **track 39** ABS/ESP computer connector.
Carry out the required repairs.
If the problem persists, go to the fault finding **parameter PR019.**

AFTER REPAIR	Deal with any other possible faults. Erase the stored faults. Switch off the ignition and carry out a road test followed by a test using the diagnostic tool.

GETtheMANUALS.org

DF014 PRESENT	INITIALISATION ERROR 1.DEF : Initialisation not performed. 2.DEF : Vehicle configuration not performed. 3.DEF : Poor conditions at time of initialisation.

NOTES	**Special notes:** When replacing the sensor/front computer follow the removal method specified in **section 80** of the repair manual and apply the programming and calibration procedures defined in the **Help** part of this section.

1.DEF ***3.DEF***	***NOTES***	**Special notes:** During this operation no one must be on board the vehicle.

Check the programming of the computer in the configuration read menu.
Adjust if necessary, following the procedure specified in the **Help** section.
Ensure that there is a mechanical connection between the sensors and the axles via the lever arms and the control levers.
Repair if necessary.
Check that the conditions required for initialisation are fully met:
– Front and rear sensors are at the correct height range(The vehicle must be on a horizontal surface under normal load conditions (luggage compartment empty)).
– Vehicle is stationary (vehicle speed zero).
Clear the fault memory.
Enter command **AC010.**
The computer will initialise: it will store the reference heights and set the actuators to the reference position.
If the fault reappears replace the computer/front sensor.

2.DEF	***NOTES***	None

Clear the fault memory.
– Go into diagnostic mode,
– Configure the vehicle type,
– Exit diagnostic mode and switch off the ignition to confirm the modification.
– Return to diagnostic mode and check that the configuration has been accepted.
If the fault reappears replace the computer/front sensor.

AFTER REPAIR	Deal with any other possible faults. Erase the stored faults. Switch off the ignition and carry out a road test followed by a test using the diagnostic tool.

GETtheMANUALS.org

DF015 PRESENT OR STORED	COMPUTER SUPPLY VOLTAGE TOO LOW

NOTES	**Conditions for applying the fault finding procedure to stored faults:** If the fault is declared present after: The fault memory is cleared and the engine has been running for **30 seconds** **Special notes**: It is possible to perform a complete check of the charging circuit using the **Optima 5800**, referring to the technical note on **charge circuit fault finding**.

Check that fuse **F3 (10A)** is intact (corrosion, poor contacts, poor/faulty crimping of the wires on the terminals...).
Check there is no interference resistance on the AP40 supply wire:
UCH, green connector **track 4B3** ⟶ **track 2** computer connector - front computer
Check there is no interference resistance on the sensor/front computer earth line:
electronic earth ⟶ **track 1** sensor connector/front computer.

If the problem persists:
Carry out the operations necessary to obtain the correct computer power supply:
11 volts < operating voltage < 14.5 volts.

– Check the battery charge,
– Check the charge circuit,
– Check the tightness and condition of the battery terminals,
– Check the chassis and engine earths.

AFTER REPAIR	Deal with any other possible faults. Erase the stored faults. Switch off the ignition and carry out a road test followed by a test using the diagnostic tool.

GETtheMANUALS.org

Reminder:

Even though there are different methods of fitting the actuators to VEL SATIS and LAGUNA on one hand and SAFRANE and ESPACE on the other, these vehicles all have the same computer, therefor **e it is essential to program the computer** to recognise which vehicle it has been installed on.This operation allows the movement type of the actuator to be selected during the actuator initialisation operation (actuator rod movement in or out).

If this procedure is not performed, the computer generates a **sensors outside permitted values on initialisation fault**
For safety reasons, it will then be impossible to input an actuator command (risk of damaging the actuator).

Each time it is switched on, the computer performs an initialisation operation which operates the actuators (the light beam moves downwards then returns to the correct ride height setting).
This actuator initialisation can be seen by switching on the ignition and turning on the headlights in the dipped beam position. If there is no actuator movement, this may indicate that the computer has been incorrectly programmed and/ or incorrectly calibrated.

Calibration (initialisation) of the system is essential for correct operation. It consists of defining a reference plane which will be used to determine variations in ride height requiring a correction of the dip angle. Without calibration, there is no actuator initialisation and the actuators will remain in a fixed position.

VP006: COMPUTER PROGRAMMING PROCEDURE

After replacing the computer/front sensor, perform the following procedure before beginning any other other work

- Establish dialogue with the diagnostic tool, go into command mode then configuration command, configure vehicle type using command: **VP006.**
- **Exit diagnostic mode**:
- **on CLIP, go back to the test computer screen,**
- **on NXR, go back to the system screen, for the relevant vehicle** .
- **Switch the ignition off and on** to confirm the modification.
- Go back into diagnostic mode,
- Check that the configuration has been accepted (command mode menu; read configuration; vehicle type).

AC010: COMPUTER CALIBRATION PROCEDURE

After removing, refitting or replacing a component of the system carry out the following procedure:

Check that the conditions required for calibration (or initialisation) are satis fied.

If these conditions are not satisfied, the unsatisfactory condition(s) will be stored in the fault memory (initialisation error fault), and initialisation will not be possible.

- Computer programmed for the correct vehicle.
- **Vehicle at kerb weight**. (kerb weight: tank full, vehicle empty, normal equipment)
- Speed zero, **handbrake released**.
- On a horizontal surface

Enter command AC010.

The computer performs the initialisation process: it stores the reference heights and sets the actuators to the reference position (284).
Turn on the dipped headlights and check the beam using the headlight beam adjuster.Adjust if necessary

GETtheMANUALS.org

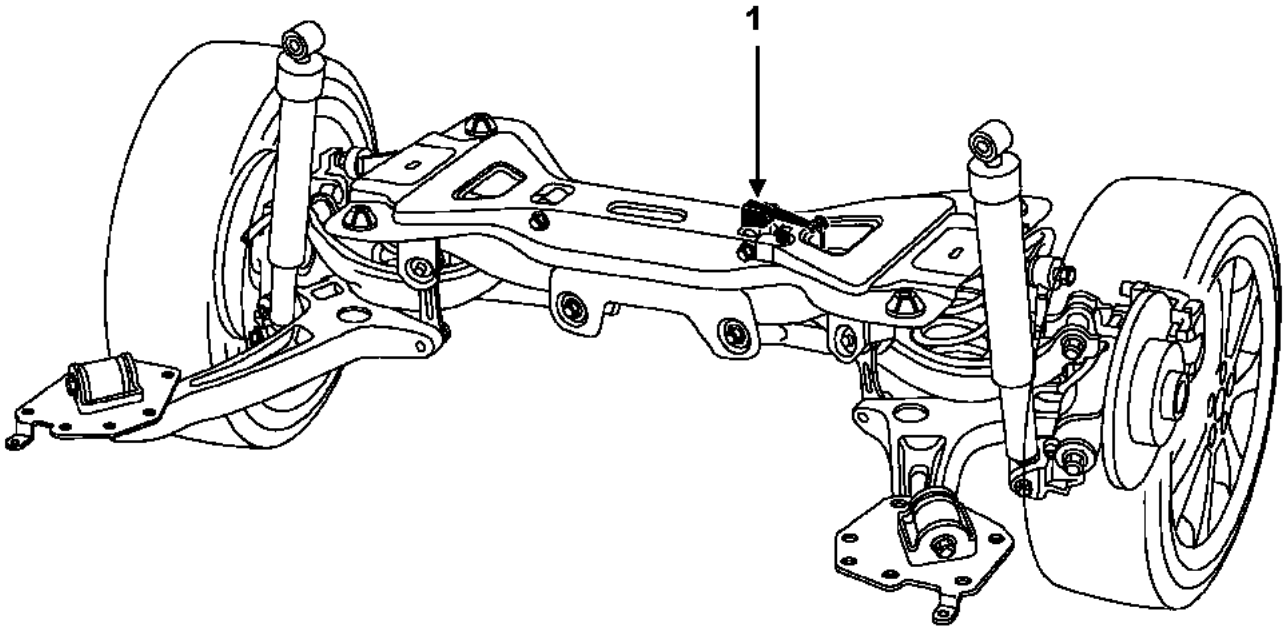

1 Rear actuator

GETtheMANUALS.org

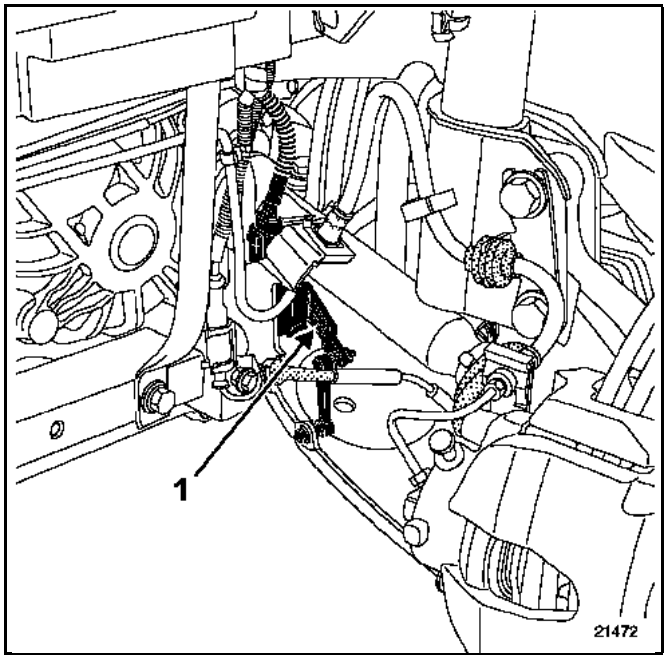

1 Front actuator computer

GETtheMANUALS.org

NOTES	**:Test conditions: ignition on and engine stopped.**

Order	Function	Parameter or state Check or action	Display and notes	Fault finding
1	Body heights	**PR004** Initial front height	**X ≅ 68.2**	These two values remain fixed and result from calibration (initialisation). If there is a problem refer to the fault finding procedures for these parameters. **PR 017, 018 and 021** should change according to the variations in body height.
		PR005 Initial rear height	**X ≅ 39.3**	
		PR017 Front height	**PR017 = PR04 ± 50 pas**	
		PR018 Rear height	**PR018 = PR004 ± 50 pas**	
		PR021 Attitude	**284 %**	
2	Vehicle speed signal	**PR019** Vehicle speed	**X = 0 mph**	If this parameter displays a value other than 0 mph when the engine is switched off, refer to the ABS/ESP fault finding procedures.
3	Actuator positions	**PR020** Actuator positions	**X = 284** (pitch) (after calibration)	This value varies as a function of **PR 021** once calibration has been completed.

GETtheMANUALS.org

NOTES	**Test conditions: ignition on and engine stopped.**

Order	Function	Parameter or state Check or action	Display and notes	Fault finding
4	Actuator commands	**AC007** High position **AC008** Low position **AC012** Check high and low position	Park the vehicle facing a wall, switch on the dipped headlights and confirm that the light beam shifts in the direction indicated by the command. **Wait until the beam has returned to the initial position (20 seconds) before issuing another command.**	In the event of a problem consult the diagnostic procedures for these commands
5	System initialisation	**AC010** Computer calibration	Wait **20 seconds before issuing another command.**	In the event of a problem refer to the calibration procedure in the **Help** section.

GETtheMANUALS.org

PR004	INITIAL FRONT HEIGHT

NOTES	Perform this diagnostic after noting an inconsistency in the initial front height value.
	Special note: With ignition on and engine stopped.

If the value indicated by **PR004** is incorrect:
Check the condition of the mounting and attachments of the front sensor unit - control lever (torsion,penetration). Repair if necessary.
Enter the command **AC010: computer calibration** follow the procedure specified in the **Help** section
If the problem persists, check the front body height using the method specified in **section 07** of the Workshop Repair Manual. Rectify if necessary, then repeat the operation from the beginning.

PR005	INITIAL REAR HEIGHT

NOTES	Perform this diagnostic after noting an inconsistency in the initial rear height value.
	Special note: With ignition on and engine stopped.

If the value indicated by **PR005** is incorrect:
Check the condition of the linkage mounting and attachments of the rear sensor unit (torsion,identation)Repair if necessary.
Enter the command **AC010: computer calibration** following the procedure specified in the **Help** section.
If the problem persists, check the front body height using the method specified in **section 07** of the Workshop Repair Manual. Rectify if necessary, then repeat the operation from the beginning.

AFTER REPAIR	**Restart the conformity check from the beginning.**

GETtheMANUALS.org

PR019	VEHICLE SPEED

NOTES	Perform this diagnostic after having detected a malfunction during the conformity check or following non-resolution of fault **DF013**.

1 - Begin a multiplex network test.
If no network fault is detected, perform a diagnostic of the ABS. If a fault is found, follow the relevant diagnostic procedure, then go to step 2.
If there is a network fault, follow the relevant breakdown procedure and go to stage 2.

2 - Clear the fault memory, perform a road test and check that the fault has disappeared. If it has not, proceed as follows:

3 - Clear the fault memory, unplug the radio connectors and perform a new road test. Has the fault disappeared?
YES → Perform a diagnostic on the radio then return to step 2.
NO

4 - Clear the fault memory, reconnect the radio, disconnect the parking aid computer and perform a new road test. Has the fault disappeared?
YES → Perform a diagnostic on the parking aid computer then return to step 2.
NO

5 - Clear the fault memory, reconnect the parking aid computer, disconnect the sunroof motor/computer and carry out another road test Has the fault disappeared?
YES → Perform a diagnostic on the sun roof motor/computer then go to stage 2.
NO

6 - Clear the fault memory, reconnect the parking aid computer, disconnect the sunroof motor/computer and carry out another road test.Has the fault disappeared?
YES → Perform a diagnostic on the navigation system computer then return to step 2.
NO

7 - Reconnect the navigation system computer.
Perform a diagnostic on the computers mentioned in steps 3, 4, 5 and 6:
– **If vehicle** speed signal fault is displayed replace the xenon lamp computer then follow the programming and initialisation procedures described in the **Help** sectionPerform a new road test to confirm the repair is successful.
– **If all these computers have a speed signal fault**, replace the ABS computer then return to step 2.

AFTER REPAIR	**Repeat the conformity check from the beginning.**

GETtheMANUALS.org

AC007 **AC008** **AC012**	HIGH POSITION ACTUATOR COMMAND LOW POSITION ACTUATOR COMMAND HIGH AND LOW ACTUATOR POSITION COMMAND

NOTES	**No faults should be present or stored** Perform this diagnostic after noting a malfunction during the conformity check.
	Special note: initialisation correct, ignition on and engine stopped.

If these commands are ineffective, check the computer programming .
If the problem persists,
check the condition of fuse no. 3,
supply to the actuators, **+ 12 volts** between **tracks 1 and 3** of the left and right actuator connectors.

+ 12 Volts ⟶ **track 3**
Earth ⟶ **track 1**

Measure the line resistance of the following connections:

UCH, green connector, track **4B3** ⟶ **Track 3** left actuator connectors and right

Earth ⟶ **Track 1** actuator connectors left and right

Carry out the necessary operations if the resistance is abnormally high.

Check continuity between:

Xenon lamp computer **track 7** ⟶ **track 2** left and right actuator connectors.

If the problem persists, ensure there is a **mechanical connection between each actuator and its lamp unit**.
Repair if necessary.
Also ensure that the reflector can move inside the lamp unit (jamming, hard point, etc.).

AFTER REPAIR	**Restart the conformity check from the beginning.**

GETtheMANUALS.org

VEL SATIS

8 Electrical equipment

80C XENON BULBS

Program No.: V010
Vdiag No.: 05

Fault finding – Introduction	80C - 2
Fault finding – System operation	80C - 6
Fault finding – Component replacement	80C - 9
Fault finding – Configurations and programming	80C - 10
Fault finding – Fault summary table	80C - 13
Fault finding – Interpretation of faults	80C - 14
Fault finding – Conformity check	80C - 26
Fault finding – Interpretation of statuses	80C - 29
Fault finding – Parameter summary table	80C - 30
Fault finding – Interpretation of parameters	80C - 31
Fault finding – Customer complaints	80C - 34
Fault finding – Fault finding charts	80C - 35

V2 **Edition Anglaise**

"The repair procedures given by the manufacturer in this document are based on the technical specifications current when it was prepared.

The procedures may be modified as a result of changes introduced by the manufacturer in the production of the various component units and accessories from which his vehicles are constructed."

All rights reserved by Renault s.a.s.

Copying or translating, in part or in full, of this document or use of the service part reference numbering system is forbidden without the prior written authority of Renault s.a.s.

© Renault s.a.s. 2007

GETtheMANUALS.org

1. SCOPE OF THIS DOCUMENT

This document presents the fault finding procedure applicable to all computers with the following specifications:

Vehicle(s): **Scénic II, Laguna II ph1, Velsatis ph1, Espace IV ph1**

Function concerned: **xenon bulbs**

Name of computer: **Xenon bulb computer**
Program No.: ***V010***
VDIAG No.: ***05***

2. PREREQUISITES FOR FAULT FINDING

Documentation type:

Fault finding procedures (this document):
–Assisted fault finding (integrated into the diagnostic tool), Dialogys.

Wiring Diagrams:
–Visu-Schéma (CD-ROM).

Type of diagnostic tools:

–CLIP + multiplex line sensor

Special tooling required

Special tooling required
Diagnostic tool
Multimeter
CLIP + CAN probe (Elé. 1674)

3. REMINDERS

Procedure

To run fault finding on the vehicle's computers, switch on the ignition in fault finding mode (forced + after ignition feed).

Proceed as follows:
– Renault card in the card reader (keyless vehicle scenario 1, entry level, not hands-free and scenario 2, top of the range, hands-free),
– press and hold Start button (longer than **5 seconds**) with start-up conditions not fulfilled,
– connect the diagnostic tool and perform the required operations.

To **cut off + after ignition feed**, proceed as follows:
– disconnect the diagnostic tool,
– Press the start button twice briefly (less than **3 seconds**),
– Check that the + after ignition feed has been cut off by checking that the computer warning lights on the instrument panel have gone out.

GETtheMANUALS.org

Faults

Faults are classed as either present or stored (having appeared in a certain situation and then disappeared, or being still present but not diagnosed in the current situation).

The **present** or **stored** status of faults should be taken into consideration when the diagnostic tool is switched on following + after ignition feed being activated (without any system components being active).

For a **present fault**, apply the procedure described in the **Interpretation of faults** section.

For a **stored fault**, note the faults displayed and apply the instructions in the **Notes** section.

If the fault is **confirmed** when the notes are applied, the fault is present. Deal with the fault.

If the fault is **not confirmed**, check:
– The electric lines on which there is a fault;
– The connectors on those lines (corrosion, bent pins, etc.);
– The resistance of the faulty component;
– The condition of the wires (insulation melted or split, chafing, etc.).

Conformity check

The aim of the conformity check is to check statuses and parameters that do not produce a fault display on the diagnostic tool when they are inconsistent. Therefore, this stage is used to:
– perform fault finding on faults that do not have a fault display, and which may correspond to a customer complaint.
– check that the system is operating correctly and that there is no risk of a fault recurring after repairs.

This section features the fault finding procedures for statuses and parameters, and the conditions for checking them.

If a status is not behaving normally or a parameter is outside the permitted tolerance values, consult the corresponding fault finding page.

Customer complaints - Fault finding chart

If the diagnostic tool check is correct, but the customer complaint is still present, it should be dealt with according to the **customer complaint**.

A summary of the overall procedure to follow is provided on the following page in the form of a flow chart.

GETtheMANUALS.org

4. FAULT FINDING PROCEDURE

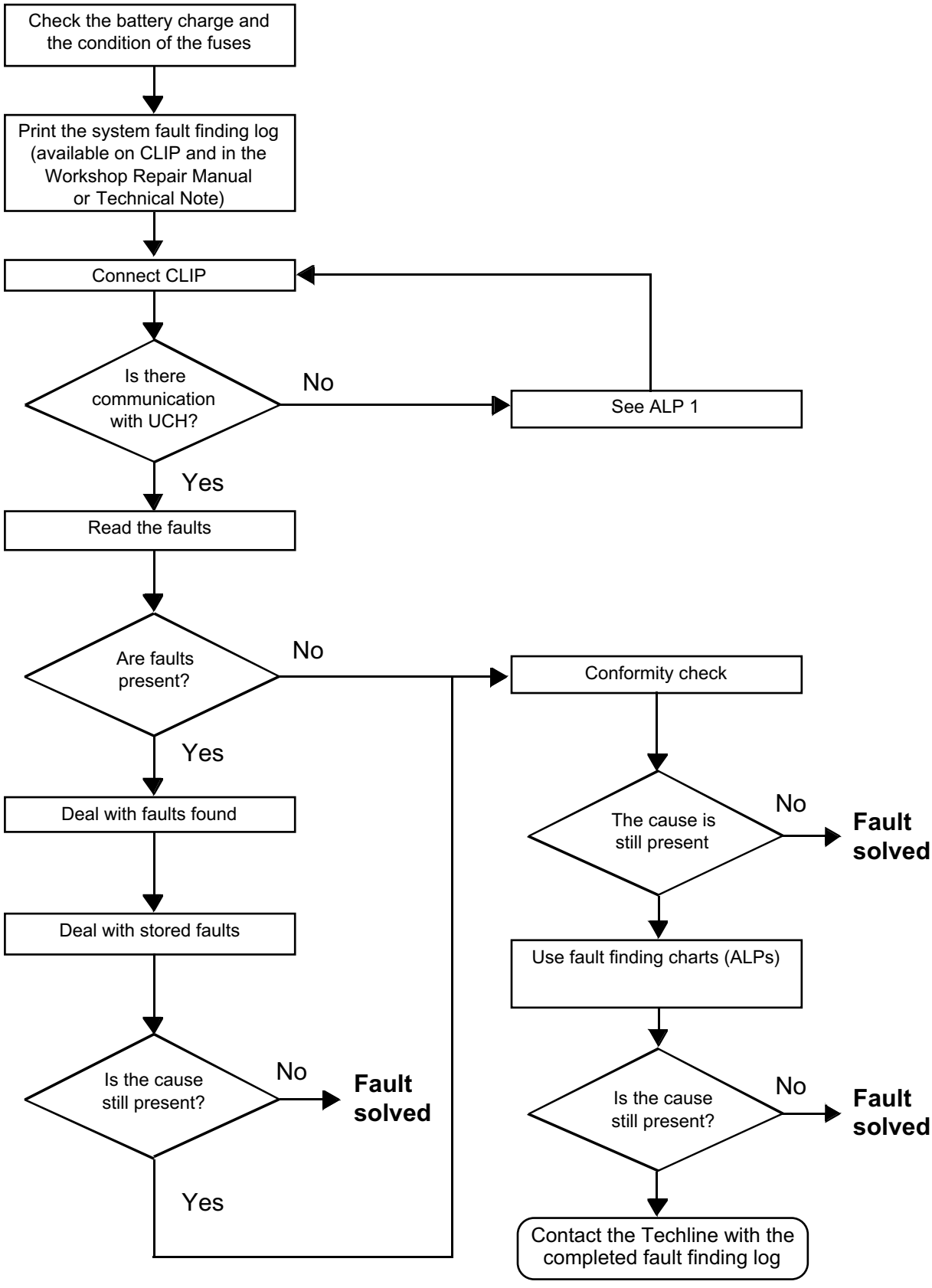

GETtheMANUALS.org

5. FAULT FINDING LOG

IMPORTANT

IMPORTANT
All faults involving a complex system call for thorough diagnostics with the appropriate tools. The FAULT FINDING LOG, which should be completed during the fault finding procedure, ensures a record is kept of the procedure carried out. It is an essential item for communication with the manufacturer.

IT IS THEREFORE OBLIGATORY TO FILL A FAULT FINDING LOG WHENEVER THE TECHLINE OR THE WARRANTY RETURNS DEPARTMENT REQUESTS IT.

You will always be asked for this log:
– when requesting technical assistance from Techline,
– for approval requests when replacing parts for which approval is mandatory,
– to be attached to monitored parts for which reimbursement is requested. The log is needed for warranty reimbursement, and enables better analysis of the parts removed.

6. SAFETY INSTRUCTIONS

All work on components requires that the safety rules be obeyed to prevent damage or injury:
– Check the battery voltage to avoid incorrect operation of computer functions.
– Use the appropriate tools.
– Do not touch the discharge bulbs.
– Never work on the discharge bulb system while it is in operation: the voltage is **20,000 V** or more.

GETtheMANUALS.org

1. COMPONENTS OF THE XENON BULB SYSTEM

The system consists of the following components:
– Front vehicle level sensor (the xenon bulb computer is built into this sensor).
– Rear vehicle level sensor.
– Right and left-hand headlight adjustment motor.
– Bulb high-voltage power unit (ballast).
– Xenon bulbs.

The K line can be used for fault finding. The system is not multiplexed.

2. SYSTEM OPERATION

When the control lever is in position (dipped headlights), it sends a signal to the UCH. The UCH processes the signal and, through the CAN network, asks the Protection and Switching Unit to turn on the xenon bulbs.

When the bulbs come on, the adjustment motor moves through three positions: low, high, initial.
This is its **initialisation**.
If the vehicle is travelling above **6 mph** (10 km/h) when the bulbs come on, there is no initialisation.

The computer manages various signals to adjust the amount of light:
– Vehicle speed: Signal provided by the ABS computer. Above **18 mph** (30 km/h), the adjustment motors raise the bulbs to provide optimum lighting for the driver.
– Vehicle front and rear height: signals from the front and rear height sensors. These sensors track the angular motion of the vehicle's body (deceleration, acceleration, vehicle loaded). The computer then controls the motors to adjust the beam and provide optimum lighting.

– System initialisation:
When the vehicle is unlocked, even if the dipped headlights are off, the system moves the adjustment motors to the low position and then the initial position.
This initialises the system.

GETtheMANUALS.org

3. CONFIGURATION-CALIBRATION OF THE SYSTEM

To calibrate and configure a new computer on a vehicle, follow the configuration procedures in the following order.

a. Vehicle type (CF003)

This configuration activates the adjustment strategies designed for the body type.
The new strategies only take effect after the ignition is switched off and the doors are locked.

Perform configuration as follows:

– Enter the xenon bulbs fault finding mode.

– Make sure that the initial vehicle position indicated by the front and rear sensors is within the allowed range.

– Run configuration **CF003** according to the vehicle type:
  – Scénic II Strd* (5-seater MPV)
  – Scenic II Long (7-seater extended MPV)
  – Espace IV
  – Velsatis
  – Laguna II

– Exit fault finding mode.
– Switch off the ignition.
– Lock the doors using the card.
– The vehicle type has been programmed.
– After unlocking the doors, turn the ignition back on.
– See that the vehicle type has been properly identified by reading configuration **LC001, Vehicle type**.

b. Computer calibration (CF001)

This calibration must be performed when a system component is replaced (e.g. sensor, headlight etc.).

It enables the computer to store the vehicle's reference level.

To ensure proper configuration and calibration, follow this procedure:

– Check tyre pressure and adjust if faulty.
– Park the vehicle on a level surface under normal driving conditions (luggage compartment empty).
– Vehicle stopped, solid base (no door rattling).
– Driver on board.
– Fuel tank full.

Once computer calibration has been performed, check conformity of the light beam.
If it is incorrect, adjust the headlights manually.

GETtheMANUALS.org

4. DEFECT MODE

If a system component is defective, **no indicator lights up on the instrument panel**.
The system then switches to defect mode.
If the computer detects a system fault, it sets the adjustment motors to the low or initial position.
If the computer detects a fault, there is no longer any initialisation when the lights are turned on.

* Strd: standard

XENON BULBS

Fault finding – Component replacement

GETtheMANUALS.org

The xenon bulbs fitted to the system require a voltage of **20,000 V** when switched on, then run on **85 V** AC.

You must **always** disconnect the battery before doing any work on the headlights, bulbs, and high-voltage headlight power transformer units.

To follow the method of removal-refitting of the constituent components of the system, see **MR 370 (Scenic II) or MR 361 (Espace IV) or MR 353 (Velsatis), Mechanical systems, 80C - Xenon Bulbs, Xenon bulb computer: Removal – Refitting** or **MR 339 (Laguna II), Mechanical systems, 80 – Headlights, Xenon headlights.**

It is forbidden to supply a bulb if it is not installed in the headlight (danger that you might damage your eyes).

The computer must be calibrated using **CF001computer calibration** (see **Configuration and programming**) each time a front or rear level sensor is replaced.

The following procedure should be applied **before** adjusting the headlight beam:
– check that there are no faults
– configure the vehicle type using command **CF003 Vehicle type** (see **Configuration and programming**)
– calibrate the computer using command **CF001** (see **Configuration and programming**)

Next adjust the headlights manually, (see **MR 370 (Scenic II) or MR 361 (Espace IV) or MR 353 (Velsatis), Mechanical systems, 80C - Xenon bulbs, Xenon headlight: Adjustment** or **MR 339 (Laguna II), Mechanical systems, 80 – Headlights, Xenon headlights)**.

GETtheMANUALS.org

CF001	COMPUTER CALIBRATION

NOTES	This configuration enables the computer to store the vehicle's reference level. Begin by configuring the vehicle type; then calibrate the vehicle level. The vehicle must be stationary. Also, the front and rear sensor values must be within the permissible range.

To calibrate the computer, proceed as follows:
- Check tyre pressure and adjust if faulty.
- Park the vehicle on a level horizontal surface.
- Make sure that the headlights have been properly adjusted manually.
- Position the vehicle with the wheels set straight ahead, engine switched off, driver behind the wheel and dipped headlights on.
- Turn on the ignition and enter **xenon bulbs** fault finding mode.
- Select **Configuration** mode.
- Run configuration **CF001**.
- When calibration is complete, exit fault finding mode.
- Lock and unlock the vehicle doors with the card.
- The computer has now been calibrated.
- Check status **LC010**, which should indicate **Completed**.

LC010	COMPUTER CALIBRATION Not completed Completed

The configuration reading **LC010** can have either of two statuses:
- **Not completed**: The computer has not been calibrated, the vehicle's reference level is unknown, and the maximum and minimum body height levels have not been programmed.
- **Completed**: The computer has been calibrated. Normal system operation. The sensor reference levels have been programmed.

AFTER REPAIR	Turn on dipped-beam headlights. Check that the system performs its initialisation to verify that the computer has no faults. Adjust the headlights manually.

GETtheMANUALS.org

CF003	VEHICLE TYPE

NOTES	This configuration is performed after replacing the computer.

Configuration procedure:
- Connect the CLIP tool and turn on the ignition.
- Enter **Xenon bulbs** fault finding mode.
- Select configuration **CF003 Vehicle type**.
- Select the type of vehicle.
- Confirm the configuration.
- Exit fault finding mode and switch off the ignition.
- Lock and unlock the vehicle doors with the card.
- Re-enter **"Discharge bulbs"** fault finding mode and read **LC001 "Vehicle type"**.
- See that the vehicle type has been properly identified by reading configuration **LC001**.

LC001	VEHICLE TYPE Not defined Scénic II Strd* Scénic II long Velsatis Laguna II Espace IV

Configuration **LC001** can have one of six statuses:
- **Not defined:** Configuration **CF003 Vehicle type**, has been completed, but the vehicle type programmed does not match the vehicle diagnosed.
- **Scénic II Strd*:** Configuration correct: the vehicle type is Scénic.
- **Scénic II long:** Configuration correct: the vehicle type is the extended Scénic.
- **Velsatis:** Configuration correct: the vehicle type is Velsatis.
- **Laguna II:** Configuration correct: the vehicle type is Laguna II.
- **Espace IV:** Configuration correct: the vehicle type is Espace IV.

* Strd: standard

AFTER REPAIR	Turn on dipped-beam headlights. Check that the system performs its initialisation to verify that the computer has no faults. Adjust the headlights manually.

GETtheMANUALS.org

AC012	ACTUATOR HIGH AND LOW POSITION CHECK

NOTES	Before running this command, make sure that the vehicle level has been calibrated. This command tests actuator control following a malfunction or customer complaint.

Use the CLIP tool to check whether the xenon bulb computer has any faults.
If fault **DF018 Actuator** is present, consult procedure for dealing with **DF018**.

If the actuators fail to move after the command is run, proceed as follows:

– Check **the continuity and absence of interference resistance** between:

Right-hand adjustment motor **track 2**	→	**track 7** of the discharge bulb computer
Left-hand adjustment motor **track 2**	→	**track 7** of the discharge bulb computer

If necessary, repair the connections.
Check the condition of the adjustment motors and xenon bulb computer connections.
Repair if necessary.
If the command still fails to move the adjustment motors, replace them.

AFTER REPAIR	Turn on dipped-beam headlights. Check that the system performs its initialisation to verify that the computer has no faults. Adjust the headlights manually.

LAD_V05_AC012

GETtheMANUALS.org

List of faults and related DTCs:

Tool fault	Associated DTC	Diagnostic tool title
DF001	**9003**	Computer
DF008	**9002**	Front height sensor circuit
DF009	**9001**	Rear height sensor circuit
DF018	**9004**	Actuator

GETtheMANUALS.org

DF001 PRESENT OR STORED	COMPUTER C.O.: Dipped headlights signal line circuit open 1.DEF: Speed signal above maximum threshold 2.DEF: Speed signal in open or short circuit to + 12 V 3.DEF: Speed signal short circuit to earth detected while driving 4.DEF: Speed greater than 0 during initialisation 5.DEF: Computer not calibrated 6.DEF: Incorrect vehicle configuration 7.DEF: Internal electronic fault 8.DEF: Actuator control line open circuit 9.DEF: Actuator control line short circuit to earth 10.DEF: Actuator control line short circuit at + 12 V 11.DEF: Battery voltage too low

NOTES	The fault is declared present after the dipped headlights are switched on, or during a road test.

C.O	***NOTES***	Priority when dealing with a number of faults.

Run a fault finding procedure on the UCH (see **87B, Passenger compartment connection unit**) or UPC (for Scénic) (see **87G, Engine compartment connection unit**) to check the correct operation of the stalk.
Check the condition of the contacts and make sure that the xenon bulb computer is properly connected.
Check the continuity and absence of interference resistance in the following connection:

For Scénic II: Black 6-track connector for the Protection and switching unit connector **track 5** **For Vel Satis/Espace or Laguna II:** Black, 6-track connector of the UCH **track 3B2**	→	**Track 6** of the xenon bulb computer.

If the fault is still present after these checks, replace the dipped headlights control stalk.

AFTER REPAIR	Turn on the dipped headlights and check that initialisation is performed. If there is no initialisation, deal with the system faults. Adjust the headlights manually after each computer calibration. Carry out a road test followed by a check with the diagnostic tool.

LAD_V05_DF001

GETtheMANUALS.org

DF001 CONTINUED 1	

1.DEF	*NOTES*	None.

Make sure that parameter **PR019 Vehicle speed** is accurate, and that the value lies within the permissible range.
Check the faults of the ABS circuit (see **38C, Anti-lock braking system**). If any faults are present, deal with them first.
Then check the continuity and absence of interference resistance between:

ABS computer **track 23**.	→	Xenon bulb computer **track 4**.

2.DEF	*NOTES*	Only take this fault into consideration if the vehicle's power supply is + after ignition.

Check the continuity and for the absence of interference resistance between:

ABS computer **track 23**.	→	Xenon bulb computer **track 4**.

Check the condition of the computer connections and repair if necessary.
Then check the insulation against **+ 12 V** of the above connection.

AFTER REPAIR	Turn on the dipped headlights and check that initialisation is performed. If there is no initialisation, deal with the system faults. Adjust the headlights manually after each computer calibration. Carry out a road test followed by a check with the diagnostic tool.

GETtheMANUALS.org

DF001 CONTINUED 2	

3.DEF	*NOTES*	None.

Check the insulation against **+ 12 V** of the connection between:		
ABS computer **track 23**	→	Xenon bulb computer **track 4**
Check the condition of the computer connections and repair if necessary.		

4.DEF	*NOTES*	None.

Make sure that parameter **PR019 Vehicle speed** is consistent. Check the faults of the ABS circuit (see **38C, Anti-lock braking system**). If any faults are present, deal with them first. Then check the continuity and absence of interference resistance between:		
ABS computer **track 23**.	→	Xenon bulb computer **track 4**.

5.DEF	*NOTES*	This fault reappears every time configuration **CF003 Vehicle type** is run.

If the computer has not been calibrated, it indicates fault **DF001 Computer fault**.
In this case, consult command **CF001 Computer calibration**.
If the fault is still present contact Techline.

AFTER REPAIR	Turn on the dipped headlights and check that initialisation is performed. If there is no initialisation, deal with the system faults. Adjust the headlights manually after each computer calibration. Carry out a road test followed by a check with the diagnostic tool.

GETtheMANUALS.org

DF001 CONTINUED 3	

6.DEF	*NOTES*	None.

If the vehicle configuration has not been done, the computer indicates fault **DF001 Computer fault**.
In this case, consult command **CF003 Vehicle type**, and configure the computer for the type of vehicle involved.
If the problem is still present, contact the Techline.

7.DEF	*NOTES*	Deal with other system faults first.

If fault **DF001**appears with **Internal computer error** status, contact the Techline.

8.DEF	*NOTES*	None.

Check the continuity and for the absence of interference resistance between:		
Right-hand headlight adjustment motor **track 2**	→	Xenon bulb computer **track 7**
Left-hand headlight adjustment motor **track 2**	→	Xenon bulb computer **track 7**
Check the condition of the connections as well as the xenon bulb computer and adjustment motor connections. Repair if necessary.		

AFTER REPAIR	Turn on the dipped headlights and check that initialisation is performed. If there is no initialisation, deal with the system faults. Adjust the headlights manually after each computer calibration. Carry out a road test followed by a check with the diagnostic tool.

GETtheMANUALS.org

DF001 CONTINUED 4	

9.DEF	*NOTES*	None.

Check the insulation from earth of the connection:		
Right-hand headlight adjustment motor **track 2**	→	Xenon bulb computer **track 7**
Left-hand headlight adjustment motor **track 2**	→	Xenon bulb computer **track 7**
Check the condition of the connections as well as the xenon bulb computer and adjustment motor connections. Repair if necessary.		

10DEF	*NOTES*	None.

Check the insulation against **+ 12 V** of the connection between:		
Right-hand headlight adjustment motor **track 2**	→	Xenon bulb computer **track 7**
Left-hand headlight adjustment motor **track 2**	→	Xenon bulb computer **track 7**
Check the condition of the connections as well as the xenon bulb computer and adjustment motor connections. Repair if necessary.		

11.DEF	*NOTES*	None.

If the battery voltage is too low (**<10 V**), check the condition of the battery and recharge or replace if necessary. Then check the vehicle's charge circuit.

AFTER REPAIR	Turn on the dipped headlights and check that initialisation is performed. If there is no initialisation, deal with the system faults. Adjust the headlights manually after each computer calibration. Carry out a road test followed by a check with the diagnostic tool.

GETtheMANUALS.org

DF008 PRESENT OR STORED	FRONT HEIGHT SENSOR CIRCUIT 1.DEF: Signal outside upper limit 2.DEF: Signal outside lower limit 3.DEF:Signal outside permitted limit on initialisation 4.DEF: Internal electronic fault

NOTES	The fault is declared present after a road test.

1.DEF	***NOTES***	None.

Check the front height sensor connections.
Repair if necessary.
Check the condition of the sensor linkage rod.
If it is damaged, the signal will be outside the limits.
Check the condition of the front sensor connection harness (pinching, breaks, etc.).
Repair if necessary.

2.DEF	***NOTES***	None.

Check the front height sensor connections.
Repair if necessary.
Check the condition of the sensor linkage rod.
If it is damaged, the signal will be outside the limits.
Check the condition of the front sensor connection harness (pinching, breaks, etc.).
Repair if necessary.

AFTER REPAIR	Turn on the dipped headlights and check that initialisation is performed. If there is no initialisation, deal with the system faults. Adjust the headlights manually after each computer calibration. Carry out a road test followed by a check with the diagnostic tool.

LAD_V05_DF008

GETtheMANUALS.org

DF008 CONTINUED	

3.DEF	*NOTES*	None.

Check the front height sensor connections.
Repair if necessary.
Check the condition of the sensor linkage rod.
If it is damaged, the signal will be outside the limits.
Check the condition of the front sensor connection harness (pinching, breaks, etc.).
Repair if necessary.

4.DEF	*NOTES*	None.

If fault **DF008** appears with the **Internal electronic fault** status, contact the Techline.

AFTER REPAIR	Turn on the dipped headlights and check that initialisation is performed. If there is no initialisation, deal with the system faults. Adjust the headlights manually after each computer calibration. Carry out a road test followed by a check with the diagnostic tool.

GETtheMANUALS.org

DF009 PRESENT OR STORED	REAR HEIGHT SENSOR CIRCUIT CC.0: Short circuit to earth CC.1: Short circuit to + 12 V 1.DEF: No signal 2.DEF : Signal outside upper limit 3.DEF: Signal outside lower limit. 4.DEF: Signal outside limit on initialisation 5.DEF: Inconsistent signal

NOTES	The fault is declared present after a road test.

CC.0	***NOTES***	None.

Check the condition of the contacts and connections of the xenon bulb computer and rear height sensor.
Check the continuity and insulation against earth between:

Track 6 of the rear level sensor connector	→	**Track 3** of the xenon bulb computer connector
Track 5 of the rear level sensor connector	→	**Track 8** of the xenon bulb computer connector

Then check the insulation of this connection against earth.
If the problem is still present, contact the Techline.

CC.1	***NOTES***	None.

Check the condition of the contacts and connections of the xenon bulb computer and rear level sensor.
Check the continuity and insulation against **+ 12 V** between:

Track 6 of the rear level sensor connector	→	**Track 3** of the xenon bulb computer connector
Track 5 of the rear level sensor connector	→	**Track 8** of the xenon bulb computer connector

Then check the insulation of this connection against earth.
If the problem is still present, contact the Techline.

AFTER REPAIR	Turn on the dipped headlights and check that initialisation is performed. If there is no initialisation, deal with the system faults. Adjust the headlights manually after each computer calibration. Carry out a road test followed by a check with the diagnostic tool.

LAD_V05_DF009

GETtheMANUALS.org

DF009 CONTINUED 1	

1.DEF	*NOTES*	None.

Check the condition of the contacts and connections of the xenon bulb computer and rear height sensor.
Check the continuity and absence of interference resistance between:

Track 6 of the rear level sensor connector	→	**Track 3** of the xenon bulb computer connector
Track 5 of the rear level sensor connector	→	**Track 8** of the xenon bulb computer connector
Track 1 of the rear level sensor connector	→	Vehicle earth

If the problem is still present, contact the Techline.

2.DEF	*NOTES*	None.

Check the condition of the rear sensor linkage and that it is correctly fitted.
Replace if necessary.
Check the condition of the contacts and connections of the xenon bulb computer and rear level sensor.
Check the continuity and absence of interference resistance between:

Track 6 of the rear level sensor connector	→	**Track 3** of the xenon bulb computer connector
Track 5 of the rear level sensor connector	→	**Track 8** of the xenon bulb computer connector

Next check the insulation of these connections against earth, and then against **+ 12 V**.
If the problem is still present, contact the Techline.

AFTER REPAIR	Turn on the dipped headlights and check that initialisation is performed. If there is no initialisation, deal with the system faults. Adjust the headlights manually after each computer calibration. Carry out a road test followed by a check with the diagnostic tool.

GETtheMANUALS.org

DF009 CONTINUED 2	

3.DEF	*NOTES*	None.

Check the condition of the rear sensor linkage and that it is correctly fitted.
Replace if necessary.
Check the condition of the contacts and connections of the xenon bulb computer and rear level sensor.
Check the continuity and absence of interference resistance between:

Track 6 of the rear level sensor connector	→	**Track 3** of the xenon bulb computer connector
Track 5 of the rear level sensor connector	→	**Track 8** of the xenon bulb computer connector

Next check the insulation of these connections against earth, and then against **+ 12 V**.
If the problem is still present, contact the Techline.

4.DEF	*NOTES*	None.

Check the condition of the rear sensor linkage and that it is correctly fitted.
Replace if necessary.
Check the condition of the contacts and connections of the xenon bulb computer and rear level sensor.
Check the continuity and absence of interference resistance between:

Track 6 of the rear level sensor connector	→	**Track 3** of the xenon bulb computer connector
Track 5 of the rear level sensor connector	→	**Track 8** of the xenon bulb computer connector

Next check the insulation of these connections against earth, and then against **+ 12 V**.
If the problem is still present, contact the Techline.

AFTER REPAIR	Turn on the dipped headlights and check that initialisation is performed. If there is no initialisation, deal with the system faults. Adjust the headlights manually after each computer calibration. Carry out a road test followed by a check with the diagnostic tool.

GETtheMANUALS.org

DF009 CONTINUED 3	

5.DEF	*NOTES*	None.

Check the condition of the rear level sensor linkage.
Replace if necessary.
Check the condition of the contacts and connections of the xenon bulb computer and rear level sensor.
Check the continuity and absence of interference resistance between:

Track 6 of the rear level sensor connector	→	**Track 3** of the xenon bulb computer connector
Track 5 of the rear level sensor connector	→	**Track 8** of the xenon bulb computer connector

Next check the insulation of these connections against earth, and then against **+ 12 V**.
If the problem is still present, contact the Techline.

AFTER REPAIR	Turn on the dipped headlights and check that initialisation is performed. If there is no initialisation, deal with the system faults. Adjust the headlights manually after each computer calibration. Carry out a road test followed by a check with the diagnostic tool.

GETtheMANUALS.org

DF018 PRESENT OR STORED	ACTUATOR 1.DEF: Actuator motor fault

NOTES	**Conditions for applying the fault finding procedure to stored faults:** If the fault appears as present after: – the fault has been cleared, – the ignition is switched off and on again, then the dipped headlights are switched on.

Park the vehicle facing a wall. Switch off the ignition. Switch on the ignition and turn on the dipped headlights. Run command **AC012 Check actuator high and low positions** to make sure that the actuators are working properly.

Check the lens unit which does not initialise by doing the following.
Check the condition of the computer connections and the actuator connections in the headlights.
Check the continuity and for the absence of interference resistance between:

computer connector **track 7**	→	**track 2** of the actuator connector in the right-hand headlight
computer connector **track 7**	→	**track 2** of the actuator connector in the right-hand headlight
Track 1 of the actuator connector		vehicle earth
Track 3 of the actuator connector		+ after ignition feed

If one or more of these checks fails, replace the defective adjustment motor(s).

AFTER REPAIR	Turn on the dipped headlights and check that initialisation is performed. If there is no initialisation, deal with the system faults. Adjust the headlights manually after each computer calibration. Carry out a road test followed by a check with the diagnostic tool.

LAD_V05_DF018

GETtheMANUALS.org

NOTES	Only carry out this conformity check after a complete check with the **diagnostic tool**. Prerequisite: dipped headlights on.

MAIN SCREEN

Parameter or Status Checked or Action	**Function**	**Display and notes**	**Fault finding**
ET001	Computer calibration	Completed	Normal operating mode
		Not completed	Run **CF001 Computer calibration**
PR020	Actuator positions	15 steps < PR020 < 520 steps	If the value is incorrect, refer to the interpretation of fault **DF018 Actuator and run command AC012 Check actuator high and low position, to see if they work properly**
PR019	Vehicle speed	0 mph (0 km/h) < PR019 < 132 mph (220 km/h)	If the value is incorrect, see the interpretation of fault **DF001 Computer**

GETtheMANUALS.org

NOTES	Only carry out this conformity check after a complete check with the **diagnostic tool**. Prerequisite: dipped headlights on.

SUB-FUNCTION: LIGHTING POSITION

Parameter or Status Checked or Action	Function	Display and notes	Fault finding
PR017	Front height	8° < PR117 < 115.5°	If the value is incorrect, consult the interpretation of faults **DF008 Front height sensor circuit** and **DF009 Rear height sensor circuit**
PR018	Rear height	9° < PR018 < 110°	
PR020	Actuator positions	15 steps < PR020 < 520 steps	If the value is incorrect, refer to the interpretation of fault **DF018 Actuator and run command AC012 Check actuator high and low position, to see if they work properly**
PR032	Front reference height	23° < PR032 < 85.6°	If the value is incorrect, refer to the interpretation of faults **DF008 Front height sensor circuit** and **DF009 Rear height sensor circuit status 4.DEF**
PR033	Rear reference height	23° < PR032 < 89.5°	
PR019	Vehicle speed	0 mph (0 km/h) < PR019 < 132 mph (220 km/h)	If the value is incorrect, see the interpretation of fault **DF001 Computer**

GETtheMANUALS.org

NOTES	Only carry out this conformity check after a complete check with the **diagnostic tool**. Prerequisite: dipped headlights on.

SUB-FUNCTION: LIGHTING CONTROL

Parameter or Status Checked or Action	Function	Display and notes	Fault finding
PR020	Actuator positions	15 steps < PR020 < 520 steps	If the value is incorrect, refer to the interpretation of fault **DF018 Actuator and run command AC012 Check actuator high and low position, to see if they work properly**

SUB-FUNCTION: LIGHTING MANAGEMENT

Parameter or Status Checked or Action	Function	Display and notes	Fault finding
ET001	Computer calibration	Completed	Normal operating mode
		Not completed	Run **CF001 Computer calibration**

GETtheMANUALS.org

ET001	COMPUTER CALIBRATION Not completed Completed

NOTES	There must be no present or stored faults.
	Special notes: The vehicle must be stationary, parked on a level surface with a driver behind the wheel and the fuel tank full.

Not completed	Status **ET001** must indicate **not done** if the computer has not yet been calibrated and the vehicle reference heights have not been programmed. If status **ET001** remains stuck on the "not done" status, run the full fault finding procedure because a component may be defective.

Completed	Status **ET001** must indicate **Done** if the computer has been calibrated and the vehicle reference heights have been programmed. This is normal operation status.

AFTER REPAIR	Carry out another fault finding check on the system. Clear the fault memory. Deal with any other faults.

LAD_V05_ET001

GETtheMANUALS.org

Tool parameter	Diagnostic tool title
PR017	Front height
PR018	Rear height
PR019	Vehicle speed
PR020	Actuator positions
PR032	Front reference height
PR033	Rear reference height

GETtheMANUALS.org

PR017 AND PR018	FRONT HEIGHT REAR HEIGHT

NOTES	There must be no present or stored faults. Carry out fault finding only if the values of this parameter are inconsistent.

If the values indicated by the vehicle do not match those of the conformity check, see faults **DF008 Front height sensor circuit** and **DF009 Rear height sensor circuit**, and follow the fault finding procedure.

AFTER REPAIR	Carry out another fault finding check on the system. Clear the fault memory. Deal with any other faults.

LAD_V05_PR017 / LAD_V05_PR018

GETtheMANUALS.org

PR019	VEHICLE SPEED

NOTES	There must be no present or stored faults. Carry out fault finding only if the values of this parameter are inconsistent.

If the values indicated by the vehicle do not match those of the conformity check, see fault **DF001 Computer 3.DEF and 4.DEF** and apply the fault finding procedure.

AFTER REPAIR	Carry out another fault finding check on the system. Clear the fault memory. Deal with any other faults.

LAD_V05_PR019

GETtheMANUALS.org

PR020	ACTUATOR POSITIONS

NOTES	There must be no present or stored faults. Carry out fault finding only if the values of this parameter are inconsistent.

IMPORTANT
Even though a height sensor or actuator is defective, the value of parameter **PR020** will always be determined by the computer.

Parameter **PR020** will therefore always be within a range of allowed values even if a component is defective.

If the values indicated by the vehicle do not match those of the conformity check, see fault **DF018, Actuators**, and follow the fault finding procedure.
To find out if an actuator is malfunctioning, see command **AC012 Check actuator high and low position**.

AFTER REPAIR	Carry out another fault finding check on the system. Clear the fault memory. Deal with any other faults.

LAD_V05_PR020

XENON BULBS

Fault finding – Customer complaints

GETtheMANUALS.org

NOTES	Only refer to the customer complaints after a full check with the **diagnostic tool**.

NO COMMUNICATION WITH THE COMPUTER	**ALP 1**
NO HEIGHT ADJUSTMENT ON EITHER OR BOTH HEADLIGHTS, REGARDLESS OF VEHICLE LOAD	**ALP 2**
GLARE OR BEAM TOO HIGH	**ALP 3**
THE LEFT AND RIGHT LOW-BEAM HEADLIGHTS DO NOT LIGHT AT THE SAME HEIGHT	**ALP 4**

GETtheMANUALS.org

ALP 1	**No dialogue with the computer**

NOTES	Only refer to this customer complaint after a complete check with the **diagnostic tool**.

Check the **1K (5A)** fuse of the passenger compartment relay and fuse box.
Replace it if necessary.

Turn on dipped-beam headlights.
If the bulbs light but the system does not perform initialisation and no communication is possible, perform the following checks:

Remove the timed power supply **40A relay A** located in the passenger compartment fuse and relay box.
Check the condition of the connections and repair if necessary.

Measure the following resistance values:
– **Power circuit:** Resistance between **tracks 85** and **86** of the relay.
If the resistance is not **65 ± 5** Ω, replace relay A.

– **Control circuit:** Resistance between **tracks 30** and **87A** of the relay.
If the resistance is not **approximately 1** Ω, replace relay A.

Check the battery voltage and carry out the operations necessary to obtain a suitable voltage (**9.5 V < battery voltage <14.4 V**).

Check for:
a **+ 12 V supply before ignition** on **track 16** of the diagnostic socket,
a **+ 12 V supply after ignition** on **track 1** of the diagnostic socket,
earth on **tracks 4** and **5** of the diagnostic socket.

Repair if necessary.

If the fault is still present, contact the Techline.

AFTER REPAIR	Perform a check using the diagnostic tool. Deal with any faults found.

LAD_V05_ALP1

GETtheMANUALS.org

ALP 2	**No correction of the height of the one or both headlights whatever the vehicle load**

NOTES	Only refer to this customer complaint after a complete check with the **diagnostic tool**.

Confirm that initialisation is performed when the dipped headlights are switched on. If it is not, the actuators or a circuit component may be defective.
Check the condition of fuse **F1K (5A)** located in the vehicle's glovebox. Repair if necessary. Run command **AC012 Check actuator high and low position** to find out which headlight is faulty.
Check for mechanical blockage of the headlight (ball joint popped out, reflector stuck, actuator seized). Make sure that the sensors are properly positioned and mounted on the body, and check the condition of the linkage.
If all the checks described above fail to solve the fault, replace the faulty adjustment motor(s).

AFTER REPAIR	Perform a check using the diagnostic tool. Deal with any faults found.

LAD_V05_ALP2

GETtheMANUALS.org

ALP 3	**Glare, or beam too high**

NOTES	Only refer to this customer complaint after a complete check with the **diagnostic tool**.

Check that headlights are mounted correctly.

Check that the right-hand and left-hand headlights light at the same level.
If the headlights differ in height, adjust the headlights manually.

Check the condition of system mechanical components (sensor mounting, links).

Check whether the initial front and rear heights **PR032 Reference front height** and **PR033 Reference rear height** are similar.
If there is a major difference between these two parameters, perform a computer calibration (**CF001 Computer calibration** described in the **Configurations and Programming** section).

Run actuator command **AC012 Check actuator high and low position**.

If the light beam moves: adjust the headlights manually.

If the light beam does not move:
Check that the adjustment motors are actuated when the command is run (motor noise + vibration).

If the motors are actuated but the beam does not move, check the condition of the adjustment motor/headlight coupling rods. Replace the faulty headlight(s).

AFTER REPAIR	Perform a check using the diagnostic tool. Deal with any faults found.

LAD_V05_ALP3

GETtheMANUALS.org

ALP 4	**The left-hand and right-hand dipped headlight beams do not light at the same height**

NOTES	Only refer to this customer complaint after a complete check with the **diagnostic tool**.

Check that headlights are mounted correctly.

Check that the right-hand and left-hand headlights light at the same level.
If the headlights differ in height, adjust the headlights manually.

Check the condition of system mechanical components (sensor mounting, links).

Check whether the initial front and rear heights **PR032 Reference front height** and **PR033 Reference rear height** are similar.
If there is a major difference between these two parameters, perform a computer calibration (**CF001 Computer calibration** described in the **Configurations and Programming** section).

Run actuator command **AC012 Check actuator high and low position**.

If the light beam moves: adjust the headlights manually.

If the light beam does not move:
Check that the adjustment motors are actuated when the command is run (motor noise + vibration).

If the motors are actuated but the beam does not move, check the condition of the adjustment motor/headlight coupling rods. Replace the faulty headlight(s).

AFTER REPAIR	Perform a check using the diagnostic tool. Deal with any faults found.

LAD_V05_ALP4

GETtheMANUALS.org

VEL SATIS

8 Electrical equipment

80C XENON BULBS

Program no.: V010
VDIAG No.: 05

Fault finding - Introduction	80C - 1
Fault finding - System operation	80C - 7
Fault finding - Component replacement	80C - 9
Fault finding - Allocation of computer tracks	80C - 10
Fault finding - Configurations and programming	80C - 11
Fault finding - Fault summary table	80C - 14
Fault finding - Interpretation of faults	80C - 15
Fault finding - Conformity check	80C - 26
Fault finding - Interpretation of statuses	80C - 28
Fault finding - Parameter summary table	80C - 29
Fault finding - Interpretation of parameters	80C - 30
Fault finding - Customer complaints	80C - 33
Fault finding - Fault finding charts	80C - 34

BJ0E - BJ0J - BJ0K - BJ0M - BJ0P - BJ0V

77 11 311 302 **FEBRUARY 2006** **EDITION ANGLAISE**

"The repair procedures given by the manufacturer in this document are based on the technical specifications current when it was prepared.

The methods may be modified as a result of changes introduced by the manufacturer in the production of the various component units and accessories from which his vehicles are constructed."

All rights reserved by Renault s.a.s.

Copying or translating, in part or in full, of this document or use of the service part reference numbering system is forbidden without the prior written authority of Renault s.a.s.

© Renault s.a.s. 2006

XENON BULBS
Fault finding - Introduction

GETtheMANUALS.org

1. SCOPE OF THIS DOCUMENT

This document presents the fault finding procedure applicable to all computers with the following specifications:

Vehicle(s): Laguna II, Velsatis, Espace IV *Function concerned: Xenon bulbs*	*Name of computer: Xenon bulb computer* *Program no.: V010* *VDIAG No: 05*

2. PREREQUISITES FOR FAULT FINDING

Documentation type:

Fault finding procedures (this manual):
– Assisted fault finding (integrated into the diagnostic tool), Dialogys.

Wiring Diagrams:
– Visu-Schéma (CD-ROM), paper version.

Diagnostic tools type:
– CLIP + multiplex line sensor

Special tooling required:

Special tooling required
Multimeter
CLIP + multiplex line sensor (Elé. 1674)

GETtheMANUALS.org

3. RECAP

Procedure

To run fault finding on the vehicle's computers, switch on the ignition in fault finding mode (forced + after ignition feed).

Proceed as follows:
- vehicle card in card reader (scenario 1: keyless vehicle, entry level model, no hands-free; and scenario 2: top of the range, hands-free),
- Press and hold Start button (longer than **5 seconds**) with start-up conditions not fulfilled,
- connect the diagnostic tool and perform the required operations.

To **cut off + after ignition**, proceed as follows:
- disconnect the diagnostic tool,
- Press the start button twice briefly (less than **3 seconds**),
- Check that the + after ignition feed has been cut off by checking that the computer warning lights on the instrument panel have gone out.

Faults

Faults are classed as either present or stored (having appeared in a certain situation and then disappeared, or being still present but not diagnosed in the current situation).

The **present** or **stored** status of faults should be taken into consideration when the diagnostic tool is switched on following the + after ignition feed being activated (without any system components being active).

For a **present fault**, apply the procedure described in the **Interpretation of faults** section.

For a **stored fault**, note the faults displayed and apply the **notes** section.

If the fault is **confirmed** when the notes are applied, the fault is present. Deal with the fault

If the fault is **not confirmed**, check:
- The electric lines on which there is a fault;
- The connectors on those lines (corrosion, bent pins, etc.);
- The resistance of the faulty component;
- The condition of the wires (insulation melted or split, chafing, etc.).

Conformity check

The aim of the conformity check is to check statuses and parameters that do not produce a fault display on the diagnostic tool when they are inconsistent. Therefore, this stage is used to:
- perform fault finding on faults that do not have a fault display, and which may correspond to a customer complaint.
- check that the system is operating correctly and that there is no risk of a fault recurring after repairs.

This section features the fault finding procedures for statuses and parameters, and the conditions for checking them.

If a status is not behaving normally or a parameter is outside the permitted tolerance values, consult the corresponding fault finding page.

Customer complaints - Fault finding chart

If the diagnostic tool check is correct, but the customer complaint is still present, it should be dealt with according to the **customer complaint**.

A summary of the overall procedure to follow is provided on the following page in the form of a flow chart.

GETtheMANUALS.org

4. FAULT FINDING PROCEDURE

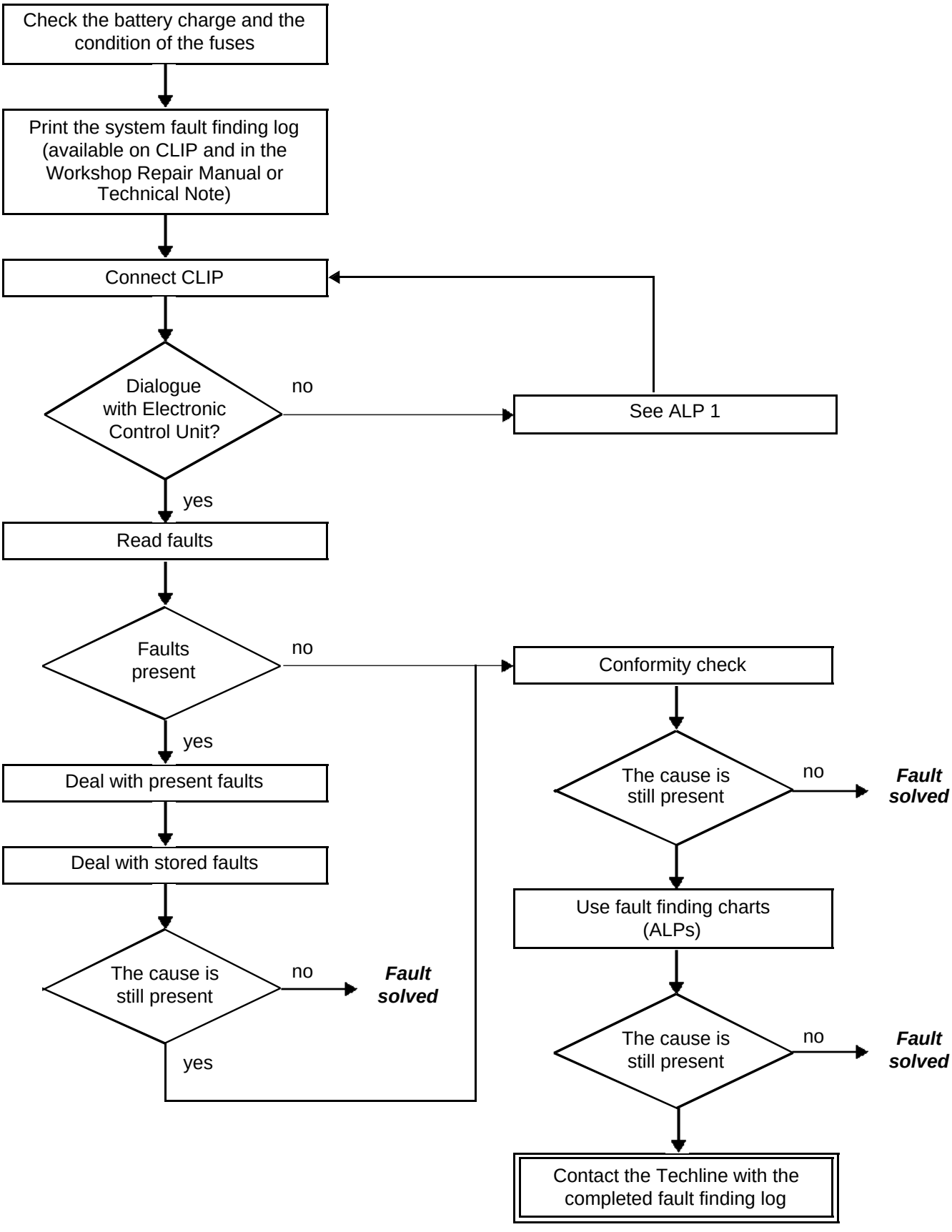

GETtheMANUALS.org

5. FAULT FINDING LOG

IMPORTANT!

IMPORTANT
Any fault on a complex system requires thorough fault finding with the appropriate tools. The FAULT FINDING LOG, which should be completed during the procedure, enables you to keep track of the procedure which is carried out. It is an essential item for communication with the manufacturer.

IT IS THEREFORE MANDATORY TO FILL OUT A FAULT FINDING LOG EACH TIME FAULT FINDING IS CARRIED OUT.

You will always be asked for this log:
– when requesting technical assistance from the Techline,
– for approval requests when replacing parts for which approval is obligatory,
– to be attached to monitored parts for which reimbursement is requested. The log is needed for warranty reimbursement, and enables better analysis of the parts removed.

6. SAFETY ADVICE

All work on components requires that the safety rules be obeyed to prevent damage or injury:
– Make sure the battery is properly charged to avoid damaging the computers with a low load.
– Use the appropriate tools.
– Do not touch the xenon bulbs.
– Never work on the xenon bulb system while it is on: the voltage is **20,000 V** or more.

GETtheMANUALS.org

FAULT FINDING LOG

System: Xenon bulbs

List of monitored parts: ***Computer***

● Administrative identification

Date	2 0
Log completed by	
VIN	
Engine	
Diagnostic tool	CLIP
Update version	

● Customer complaint

	1079	No automatic adjustment of the dipped headlights		1081	Erratic automatic adjustment		1082	The dipped headlights do not switch on
	1080	The dipped headlights do not switch off		1083	The dipped headlights come on intermittently		1084	The headlight range is too weak

Other — Your comments

● Conditions under which the customer complaint occurs

	005	While driving		011	When the ignition is switched on		009	Sudden fault
	003	When stationary		004	Intermittently		999	When switching on the main beam headlights

Other — Your comments

● Documentation used in fault finding

Fault finding procedure used	
Type of diagnostic manual:	Workshop Repair Manual ❑ Technical Note: ❑ Assisted fault finding ❑
Fault finding manual no:	
Wiring diagram used	
Wiring Diagram Technical Note No:	
Other documentation	
Title and/or part number:	

RENAULT

FD 19
Fault finding log

GETtheMANUALS.org

FAULT FINDING LOG

System: Xenon bulbs

● Computer identification and system parts replaced

Part 1 part no.	
Part 2 part no.	
Part 3 part no.	
Part 4 part no.	
Part 5 part no.	

To be read with the diagnostic tool (Identification screen):

Computer part no.	
Supplier no.	
Program no.	
Software version	
Calibration no.	
VDIAG	

● Faults found with the diagnostic tool

Fault no.	Present	Stored	Fault name	Specification

● Conditions under which fault occurs

Status or parameter no.	Parameter name	Value	Unit

● System-specific information

Description:

● Additional information

What factors led you to replace the computer? What other parts were replaced?	
Other defective functions?	
Your comments:	

RENAULT

FD 19
Fault finding log

GETtheMANUALS.org

1 - XENON BULB SYSTEM COMPONENTS

The system consists of the following components:
- Front vehicle level sensor (the xenon bulb computer is built into this sensor).
- Rear vehicle level sensor.
- Right and left-hand headlight adjustment motor.
- Bulb high-voltage power unit (ballast).
- Xenon bulbs.

The K line can be used for fault finding; the system is not multiplexed.

2 - OPERATING THE SYSTEM

When the control lever is in position (dipped headlights), it sends a signal to the UCH. The UCH deals with this signal and requests the xenon bulbs to come on.

When the bulbs come on, the adjustment motor moves through three positions: low, high, initial.
This is its **initialisation**.
If the vehicle is travelling above 6 mph (10 km/h) when the bulbs come on, there is no initialisation.

The computer manages various signals to adjust the amount of light:
- Vehicle speed: signal from the ABS computer. Above 18 mph (30 km/h), the adjustment motors raise the bulbs to provide optimum lighting for the driver.
- Vehicle front and rear height: signals from the front and rear height sensors. These sensors track the angular motion of the vehicle's body (deceleration, acceleration, vehicle loaded). The computer then controls the motors to adjust the beam and provide optimum lighting.

- System initialisation:

When the vehicle is unlocked, even if the dipped headlights are off, the system moves the adjustment motors to the low position and then the initial position.
This initialises the system.

GETtheMANUALS.org

3 - SYSTEM CONFIGURATION/CALIBRATION

To calibrate and configure a new computer on a vehicle, follow the configuration procedures in the following order.

a - Vehicle type (CF003)

This configuration activates the adjustment strategies designed for the body type.
The new strategies only take effect after the ignition is switched off and the doors are locked.

Perform configuration as follows:

– Enter the xenon bulbs fault finding mode.

– Make sure that the initial vehicle position indicated by the front and rear sensors is within the allowed range.

– Run configuration **CF003** according to the vehicle type:
  – J84 (MPV 5 seats)
  – R84 (MPV 7 seats LWB)
  – SUV84 (MPV 4x4)
  – Espace IV
  – Velsatis
  – Laguna II

– Exit fault finding mode.
– Switch off the ignition.
– Lock the doors using the card.
– The vehicle type has been programmed.
– After unlocking the doors, turn the ignition back on.
– See that the vehicle type has been properly identified by reading configuration **LC001, Vehicle type**.

b - Computer calibration CF001

This calibration must be performed when a system component is replaced (e.g. sensor, headlight etc.).

It enables the computer to store the vehicle's reference level.

To ensure proper configuration and calibration, follow this procedure:

– Check tyre pressure and adjust if faulty.
– Park the vehicle on a level surface under normal driving conditions (luggage compartment empty).
– Vehicle stopped, no variation in attitude (no door rattling).
– Driver aboard.
– Fuel tank full.

Once computer calibration has been performed, check conformity of the light beam.
If it is incorrect, adjust the headlights manually.

4 - DEFECT MODE

If a system component is defective, **no indicator lights up on the instrument panel**.
The system then switches to defect mode.
If the computer detects a system fault, it sets the adjustment motors to the low or initial position.
If the computer detects a fault, there is no longer any initialisation when the lights are turned on.

GETtheMANUALS.org

The system's xenon bulbs require a voltage of **20,000 V** when switched on, then run on **85 V** AC.

The battery **must without fail** be disconnected before any work on the headlights, bulbs, and high-voltage headlight power transformer units.

See the Workshop Repair Manual for how to remove and refit the system components.

It is forbidden to power a bulb if it is not installed in the headlight (dangerous for your eyes).

Whenever the front or rear level sensor is replaced, the computer must be calibrated with **CF003**.

GETtheMANUALS.org

Xenon bulb computer 8-track black connector

Track	Description
1	Earth
2	Timed +12 V power supply
3	Vehicle rear height signal from rear level sensor
4	Vehicle speed signal from ABS computer.
5	Fault finding signal
6	Dipped headlights signal
7	Right-hand and left-hand headlight adjustment motor control signal
8	Rear level sensor + power supply from xenon bulb computer

GETtheMANUALS.org

CF001	COMPUTER CALIBRATION

NOTES	This configuration enables the computer to store the vehicle's reference level. Begin by configuring the vehicle type; then calibrate the vehicle level. The vehicle must be stationary. Also, the front and rear sensor values must be within the permissible range.

To calibrate the computer, proceed as follows:
- Check tyre pressure and adjust if faulty.
- Park the vehicle on a level horizontal surface.
- Make sure that the headlights have been properly adjusted manually.
- Position the vehicle with the wheels set straight ahead, engine switched off, driver behind the wheel and dipped headlights on.
- Turn on the ignition and enter **xenon bulbs** fault finding mode.
- Select **Configuration** mode.
- Run configuration **CF001**.
- When calibration is complete, exit fault finding mode.
- Lock and unlock the doors with the card.
- The computer has now been calibrated.
- Check status **LC010**, which should indicate **Completed**.

LC010	COMPUTER CALIBRATION Status 1:Not completed Status 2:Completed

The configuration **LC010** reading can have one of two statuses:

- **Not completed:** The computer has not been calibrated, the vehicle's reference level is unknown, and the maximum and minimum body height levels have not been programmed.

- **Completed:** The computer has been calibrated. Normal system operation. The sensor reference levels have been programmed.

AFTER REPAIR	Turn on the dipped beam headlights. Check that the system performs its initialisation to verify that the computer has no faults. Adjust the headlights manually.

GETtheMANUALS.org

CF003	VEHICLE TYPE

NOTES	This configuration is performed after replacing the computer.

Configuration procedure:

- Connect the CLIP tool and turn on the ignition.
- Enter **Xenon bulbs** fault finding mode.
- Select configuration **CF003 Vehicle type**.
- Select the type of vehicle.
- Confirm the configuration.
- Exit fault finding mode and switch off the ignition.
- Lock and unlock the vehicle doors with the card.
- Re-enter **Xenon bulbs** fault finding mode and read **LC001 Vehicle type**.
- See that the vehicle type has been properly identified by reading configuration **LC001**.

LC001	VEHICLE TYPE Not defined J84 R84 SUV 84 Velsatis Laguna II Espace IV

Configuration **LC001** can have one of four statuses:
- **Not defined:** Configuration **CF003 Vehicle type,** has been completed, but the vehicle type programmed does not match the vehicle diagnosed.
- **J84:** Configuration correct: the vehicle type is Scénic.
- **R84:** Configuration correct: the vehicle type is the LWB Scénic.
- **SUV84:** Configuration correct: the vehicle type is Scénic 4x4.
- **Velsatis:** Configuration correct: the vehicle type is Velsatis.
- **Laguna II:** Configuration correct: the vehicle type is Laguna II.
- **Espace IV:** Configuration correct: the vehicle type is Espace IV.

AFTER REPAIR	Turn on the dipped beam headlights. Check that the system performs its initialisation to verify that the computer has no faults. Adjust the headlights manually.

GETtheMANUALS.org

AC012	ACTUATOR HIGH AND LOW POSITION CHECK

NOTES	Before running this command, make sure that the vehicle level has been calibrated. This command tests actuator control following a malfunction or customer complaint.

Use the CLIP tool to check whether the xenon bulb computer has any faults.
If fault **DF018 Actuator** is present, consult procedure for dealing with **DF018**.

If the actuators fail to move after the command is run, proceed as follows:

– Check **the continuity and absence of interference resistance** between:
Right-hand adjustment motor **track 2** ⟶ **track 7** of the xenon bulb computer
Left-hand adjustment motor **track 2** ⟶ **track 7** of the xenon bulb computer

If necessary, repair the connections.
Check the condition of the adjustment motors and xenon bulb computer connections.
Repair if necessary.
If the command still fails to move the adjustment motors, replace them.

AFTER REPAIR	Turn on the dipped beam headlights. Check that the system performs its initialisation to verify that the computer has no faults. Adjust the headlights manually.

GETtheMANUALS.org

List of faults and related DTCs:

Tool fault	Associated DTC	Diagnostic tool title
DF001	**9003**	Computer
DF008	**9002**	Front height sensor circuit
DF009	**9001**	Rear height sensor circuit
DF018	**9004**	Actuators

GETtheMANUALS.org

DF001 PRESENT	COMPUTER C.O. : Dipped headlights signal circuit open 1.DEF : Speed signal above maximum threshold 2.DEF : Speed signal open circuit or short circuit to + 12 V 3.DEF : Speed signal short circuit to earth detected while driving 4.DEF : Speed greater than 0 during initialisation 5.DEF : Computer not calibrated 6.DEF : Incorrect vehicle configuration 7.DEF : Internal electronic fault. 8.DEF : Actuator control line open circuit 9.DEF : Actuator control line short circuit to earth 10.DEF : Actuator control line short circuit to + 12 V 11.DEF : Battery voltage too low

NOTES	The fault is declared present after the dipped headlights are switched on, or during a road test.

C.O.	***NOTES***	Priority when dealing with a number of faults

Replace if necessary.
Carry out fault finding on the UCH to make sure that the stalk works properly.
Check the condition of the contacts and make sure that the xenon bulb computer is properly connected.
Check the continuity and make sure there is no interference resistance on the following connection:
UCH black connector **track 3B2 (AP3)** ⟶ **Track 6** of the xenon bulb computer
If the fault is still present after these checks, replace the dipped headlights control stalk.

1.DEF	***NOTES***	None

Make sure that parameter **PR019 Vehicle speed** is accurate, and that the value lies within the permissible range.
Check the ABS circuit for faults. If any faults are present, deal with them first.
Then check the continuity and absence of interference resistance between:
ABS computer **track 23** ⟶ Xenon bulb computer **track 4**

AFTER REPAIR	Turn on the dipped headlights and check that initialisation is performed. If there is no initialisation, deal with the system faults. Adjust the headlights manually after each computer calibration. Carry out a road test, then check with the diagnostic tool.

GETtheMANUALS.org

DF001 PRESENT **CONTINUED 1**	

2.DEF	***NOTES***	Only take this fault into consideration if the vehicle's power supply is + after ignition.

Check the continuity and absence of interference resistance between:
ABS computer **track 23** → Xenon bulb computer **track 4**
Check the condition of the computer connections and repair if necessary.
Then check the insulation against + 12 V on the connection below.

3.DEF	***NOTES***	None

Check the insulation against **+12 V** of the connection between:
ABS computer **track 23** → Xenon bulb computer **track 4**
Check the condition of the computer connections and repair if necessary.

4.DEF	***NOTES***	None

Make sure that parameter **PR019 Vehicle speed** is consistent.
Check the ABS circuit for faults. If any faults are present, deal with them first.
Then check the continuity and absence of interference resistance between:
ABS computer **track 23** → Xenon bulb computer **track 4**

5.DEF	***NOTES***	This fault reappears every time configuration **CF003 Vehicle type** is run.

If the computer has not been calibrated, it indicates fault **DF001 Computer fault**.
In this case, consult command **CF001 Computer calibration**.
If the fault persists, contact the **Techline**.

AFTER REPAIR	Turn on the dipped headlights and check that initialisation is performed. If there is no initialisation, deal with the system faults. Adjust the headlights manually after each computer calibration. Carry out a road test, then check with the diagnostic tool.

GETtheMANUALS.org

DF001 PRESENT **CONTINUED 2**	

6.DEF	***NOTES***	None

If the vehicle configuration has not been done, the computer indicates fault **DF001 Computer fault**.
In this case, consult command **CF003 Vehicle type**, and configure the computer for the type of vehicle involved.
If the fault is still present, contact the Techline.

7.DEF	***NOTES***	Deal with other system faults first.

If fault **DF001** appears with **Internal computer error** status, contact the Techline.

8.DEF	***NOTES***	None

Check the continuity and absence of interference resistance between:
Right-hand headlight adjustment motor **track 2** → Xenon bulb computer **track 7**
Left-hand headlight adjustment motor **track 2** → Xenon bulb computer **track 7**
Check the condition of the connections as well as the xenon bulb computer and adjustment motor connections.
Repair if necessary.

AFTER REPAIR	Turn on the dipped headlights and check that initialisation is performed. If there is no initialisation, deal with the system faults. Adjust the headlights manually after each computer calibration. Carry out a road test, then check with the diagnostic tool.

GETtheMANUALS.org

DF001 PRESENT **CONTINUED 3**	

9.DEF	***NOTES***	None

Check the insulation against earth on the following connection:
Right-hand headlight adjustment motor **track 2** → Xenon bulb computer **track 7**
Left-hand headlight adjustment motor **track 2** → Xenon bulb computer **track 7**
Check the condition of the connections as well as the xenon bulb computer and adjustment motor connections.
Repair if necessary.

10.DEF	***NOTES***	None

Check the insulation against **+12 V** of the connection:
Right-hand headlight adjustment motor **track 2** → Xenon bulb computer **track 7**
Left-hand headlight adjustment motor **track 2** → Xenon bulb computer **track 7**
Check the condition of the connections as well as the xenon bulb computer and adjustment motor connections.
Repair if necessary.

11.DEF	***NOTES***	None

If the battery voltage is too low (< 10 V), check the condition of the battery and recharge or replace if necessary.
Then check the vehicle's charge circuit.

AFTER REPAIR	Turn on the dipped headlights and check that initialisation is performed. If there is no initialisation, deal with the system faults. Adjust the headlights manually after each computer calibration. Carry out a road test, then check with the diagnostic tool.

GETtheMANUALS.org

DF008 PRESENT OR STORED	FRONT HEIGHT SENSOR CIRCUIT 1.DEF: Signal outside upper limit 2.DEF: Signal outside lower limit 3.DEF : Signal outside limit on initialisation 4.DEF : Internal electronic fault.

NOTES	The fault is declared present after a road test.

1.DEF	***NOTES***	None.

Check the front height sensor connections.
Repair if necessary.
Check the condition of the sensor linkage rod.
If it is damaged, the signal will be outside the limits.
Check the condition of the front sensor connection harness (pinching, breaks, etc.).
Repair if necessary.

2.DEF	***NOTES***	None

Check the front height sensor connections.
Repair if necessary.
Check the condition of the sensor linkage rod.
If it is damaged, the signal will be outside the limits.
Check the condition of the front sensor connection harness (pinching, breaks, etc.).
Repair if necessary.

AFTER REPAIR	Turn on the dipped headlights and check that initialisation is performed. If there is no initialisation, deal with the system faults. Adjust the headlights manually after each computer calibration. Carry out a road test, then check with the diagnostic tool.

GETtheMANUALS.org

DF008 PRESENT **CONTINUED 1**	

3.DEF	***NOTES***	None

Check the front height sensor connections.
Repair if necessary.
Check the condition of the sensor linkage rod.
If it is damaged, the signal will be outside the limits.
Check the condition of the front sensor connection harness (pinching, breaks, etc.).
Repair if necessary.

4.DEF	***NOTES***	None

If fault **DF008** appears with the **Internal electronic fault** status, contact the Techline.

AFTER REPAIR	Turn on the dipped headlights and check that initialisation is performed. If there is no initialisation, deal with the system faults. Adjust the headlights manually after each computer calibration. Carry out a road test, then check with the diagnostic tool.

GETtheMANUALS.org

DF009 PRESENT OR STORED	REAR HEIGHT SENSOR CIRCUIT CC.0 : Short circuit to earth CC.1 : Short circuit to +12 V 1.DEF: Signal absent 2.DEF: Signal outside upper limit 3.DEF: Signal outside lower limit 4.DEF : Signal outside limit on initialisation 5.DEF: Inconsistent signal

NOTES	The fault is declared present after a road test.

CC.0	***NOTES***	None.

Check the condition of the contacts and the xenon bulb computer and rear height sensor connections.
Check the continuity and insulation against earth between:
Track 6 of the rear level sensor connector → **Track 3** of the xenon bulb computer connector
Track 5 of the rear level sensor connector → **Track 8** of the xenon bulb computer connector
Then check the insulation of this connection against earth.
If the fault is still present, contact the Techline.

CC.1	***NOTES***	None.

Check the condition of the contacts and the xenon bulb computer and rear level sensor connections.
Check the continuity and insulation against +12 V between:
Track 6 of the rear level sensor connector → **Track 3** of the xenon bulb computer connector
Track 5 of the rear level sensor connector → **Track 8** of the xenon bulb computer connector
Then check the insulation of this connection against earth.
If the fault is still present, contact the Techline.

AFTER REPAIR	Turn on the dipped headlights and check that initialisation is performed. If there is no initialisation, deal with the system faults. Adjust the headlights manually after each computer calibration. Carry out a road test, then check with the diagnostic tool.

GETtheMANUALS.org

DF009 **CONTINUED 1**	

1.DEF	***NOTES***	None

Check the condition of the contacts and the xenon bulb computer and rear level sensor connections.
Check the continuity and absence of interference resistance between:

- **Track 6** of the rear level sensor connector → **Track 3** of the xenon bulb computer connector
- **Track 5** of the rear level sensor connector → **Track 8** of the xenon bulb computer connector
- **Track 1** of the rear level sensor connector → Vehicle earth

If the fault is still present, contact the Techline.

2.DEF	***NOTES***	None

Check the condition of the rear sensor linkage and that it is correctly fitted.
Replace if necessary.
Check the condition of the contacts and the xenon bulb computer and rear level sensor connections.
Check the continuity and absence of interference resistance between:

- **Track 6** of the rear level sensor connector → **Track 3** of the xenon bulb computer connector
- **Track 5** of the rear level sensor connector → **Track 8** of the xenon bulb computer connector

Next check the insulation of these connections against earth, and then against **+12 V**.
If the fault is still present, contact the Techline.

AFTER REPAIR	Turn on the dipped headlights and check that initialisation is performed. If there is no initialisation, deal with the system faults. Adjust the headlights manually after each computer calibration. Carry out a road test, then check with the diagnostic tool.

GETtheMANUALS.org

DF009 **CONTINUED 2**	

3.DEF	***NOTES***	None

Check the condition of the rear sensor linkage and that is correctly fitted.
Replace if necessary.
Check the condition of the contacts and the xenon bulb computer and rear level sensor connections.
Check the continuity and absence of interference resistance between:
Track 6 of the rear level sensor connector → **Track 3** of the xenon bulb computer connector
Track 5 of the rear level sensor connector → **Track 8** of the xenon bulb computer connector
Next check the insulation of these connections against earth, and then against **+12 V**.
If the fault is still present, contact the Techline.

4.DEF	***NOTES***	None

Check the condition of the rear sensor linkage and that it is correctly fitted.
Replace if necessary.
Check the condition of the contacts and the xenon bulb computer and rear level sensor connections.
Check the continuity and absence of interference resistance between:
Track 6 of the rear level sensor connector → **Track 3** of the xenon bulb computer connector
Track 5 of the rear level sensor connector → **Track 8** of the xenon bulb computer connector
Next check the insulation of these connections against earth, and then against **+12 V**.
If the fault is still present, contact the Techline.

AFTER REPAIR	Turn on the dipped headlights and check that initialisation is performed. If there is no initialisation, deal with the system faults. Adjust the headlights manually after each computer calibration. Carry out a road test, then check with the diagnostic tool.

GETtheMANUALS.org

DF009 **CONTINUED 3**	

5.DEF	***NOTES***	None

Check the condition of the rear level sensor linkage.
Replace if necessary.
Check the condition of the contacts and the xenon bulb computer and rear level sensor connections.
Check the continuity and absence of interference resistance between:

Track 6 of the rear level sensor connector → **Track 3** of the xenon bulb computer connector
Track 5 of the rear level sensor connector → **Track 8** of the xenon bulb computer connector

Next check the insulation of these connections against earth, and then against **+12 V**.
If the fault is still present, contact the Techline.

AFTER REPAIR	Turn on the dipped headlights and check that initialisation is performed. If there is no initialisation, deal with the system faults. Adjust the headlights manually after each computer calibration. Carry out a road test, then check with the diagnostic tool.

GETtheMANUALS.org

DF018 PRESENT OR STORED	ACTUATORS 1.DEF: Actuator motor fault

1.DEF	***NOTES***	**Conditions for applying the fault finding procedure to stored faults:** If the fault appears as present after: – the fault has been cleared – the ignition is switched off and on again, then the dipped headlights are switched on.

Park the vehicle facing a wall. Switch off the ignition. Switch on the ignition and turn on the dipped headlights. Run command **AC012 Check actuator high and low positions** to make sure that the actuators are working properly.

Check the lens unit which does not initialise by doing the following.
Check the condition of the computer connections and the actuator connections in the headlights.
Check the continuity and absence of interference resistance between:

- computer connector **track 7** → **track 2** of the actuator connector in the right-hand headlight
- computer connector **track 7** → **track 2** of the actuator connector in the left-hand headlight
- **Track 1** of the actuator connector → vehicle earth
- **Track 3** of the actuator connector → + after ignition feed

If one or more of these checks fail, replace the defective **adjustment motor(s)**.

AFTER REPAIR	Turn on the dipped headlights and check that initialisation is performed. If there is no initialisation, deal with the system faults. Adjust the headlights manually after each computer calibration. Carry out a road test, then check with the diagnostic tool.

GETtheMANUALS.org

NOTES	Only check the conformity after a complete check with the diagnostic tool. **Prerequisite: dipped headlights on.**

SUB-FUNCTION: LIGHTING POSITION

Order	Parameter or Status checked or Action	Function	Display and Notes	Fault finding
1	PR017	Front height	8° < PR117 < 115.5°	If the value is incorrect, consult the interpretation of faults **DF008 Front height sensor circuit** and **DF009 Rear height sensor circuit**
	PR018	Rear height	9° < PR018 < 110°	
2	PR020	Actuator positions	15 steps < PR020 < 520 steps	If the value is incorrect, refer to the interpretation of fault **DF018 Actuator and run command AC012 Check actuator high and low position, to see if they work properly**
3	PR032	Front reference height	23° < PR032 < 85.6°	If the value is incorrect, refer to the interpretation of faults **DF008 Front height sensor circuit** and **DF009 Rear height sensor circuit status 4.DEF**
	PR033	Rear reference height	23° < PR032 < 89.5°	
4	PR019	Vehicle speed	0 mph (0 km/h) < PR019 < 132 mph (220 km/h)	If the value is incorrect, see the interpretation of fault **DF001 Computer**

GETtheMANUALS.org

NOTES	Only check the conformity after a complete check with the diagnostic tool. **Prerequisite: dipped headlights on.**

SUB-FUNCTION: LIGHTING CONTROL

Order	Parameter or Status checked or Action	Function	Display and Notes	Fault finding
1	PR020	Actuator positions	15 steps < PR020 < 520 steps	If the value is incorrect, refer to the interpretation of fault **DF018 Actuator and run command AC012 Check actuator high and low position, to see if they work properly**

SUB-FUNCTION: LIGHTING MANAGEMENT

Order	Parameter or Status checked or Action	Function	Display and Notes	Fault finding
1	ET001	Computer calibration	Completed	Normal operating mode
			Not completed	Run **CF001 Computer calibration**

GETtheMANUALS.org

ET001	COMPUTER CALIBRATION Status 1:Not completed Status 2:Completed

NOTES	There must be no present or stored faults.
	Special notes: The vehicle must be stationary, parked on a level surface with a driver behind the wheel and the fuel tank full.

Not completed	Status **ET001** should be **Not completed** if the computer has not yet been calibrated and the vehicle reference heights have not been programmed. If status **ET001** remains stuck at Not completed, carry out fault finding on the entire system as a component may be defective.
Completed	Status **ET001** should be **Completed** if the computer has been calibrated and the vehicle reference heights have been programmed. This is normal operation status.

AFTER REPAIR	Carry out another fault finding check on the system. Clear the fault memory. Deal with any other faults.

GETtheMANUALS.org

Tool parameter	Diagnostic tool title
PR020	Actuator positions
PR032	Front reference height
PR017	Front height
PR033	Rear reference height
PR018	Rear height
PR019	Vehicle speed

GETtheMANUALS.org

PR017 and PR018	FRONT HEIGHT REAR HEIGHT

NOTES	There must be no present or stored faults. Carry out fault finding only if the values of this parameter are inconsistent.

If the values indicated by the vehicle do not match those of the conformity check, see faults **DF008 Front height sensor circuit and DF009 Rear height sensor circuit**, and follow the fault finding procedure.

AFTER REPAIR	Carry out another fault finding check on the system. Clear the fault memory. Deal with any other faults.

GETtheMANUALS.org

PR019	VEHICLE SPEED

NOTES	There must be no present or stored faults. Carry out fault finding only if the values of this parameter are inconsistent.

If the values indicated by the vehicle do not match those of the conformity check, see fault **DF001 Computer 3.DEF and 4.DEF** and apply the fault finding procedure.

AFTER REPAIR	Carry out another fault finding check on the system. Clear the fault memory. Deal with any other faults.

GETtheMANUALS.org

PR020	ACTUATOR POSITIONS

NOTES	There must be no present or stored faults. Carry out fault finding only if the values of this parameter are inconsistent.

IMPORTANT
Even though a height sensor or actuator is defective, the value of parameter **PR020** will always be determined by the computer.

Parameter **PR020** will therefore always be within a range of permissible values even if one of the components is defective.

If the values indicated by the vehicle do not match those of the conformity check, refer to fault **DF018 Actuators**, and follow the diagnostic procedure.
To find out if an actuator is malfunctioning, see command **AC012 Check actuator high and low position**.

AFTER REPAIR	Carry out another fault finding check on the system. Clear the fault memory. Deal with any other faults.

XENON BULBS
Fault finding - Customer complaints

GETtheMANUALS.org

NOTES	Only check the customer complaint after performing a complete check with the diagnostic tool.

NO COMMUNICATION WITH THE COMPUTER — **ALP 1**

NO HEIGHT ADJUSTMENT ON EITHER OR BOTH HEADLIGHTS, REGARDLESS OF VEHICLE LOAD — **ALP 2**

DIPPED HEADLIGHT BEAMS TOO HIGH — **ALP 3**

THE LEFT AND RIGHT-HAND DIPPED BEAM HEADLIGHTS DO NOT LIGHT AT THE SAME HEIGHT — **ALP 4**

GETtheMANUALS.org

ALP 1	No dialogue with the computer

NOTES	Only check the customer complaint after performing a complete check with the diagnostic tool.

Check fuse **1K (5A)** of the passenger compartment fuse and relay box.
Replace it if necessary.

Turn on dipped-beam headlights.
If the bulbs light but the system does not perform initialisation and no communication is possible, perform the following checks:

Remove the timed power supply **40A relay A** located in the passenger compartment fuse and relay box.
Check the condition of the connections and repair if necessary.

Measure the following resistance values:
– **Power circuit:** Resistance between **tracks 85** and **86** of the relay.
If the resistance is not **65 Ω ± 5 Ω**, replace relay A.

– **Control circuit:** Resistance between **tracks 30** and **87A** of the relay.
If the resistance is not **approximately 1 Ω**, replace relay A.

Check the battery voltage and carry out the operations necessary to obtain a suitable voltage (**9.5 V < battery voltage <14.4 V**).

Check for:

+12 V before ignition feed on **track 16** of the diagnostic socket,
+12 V after ignition feed on **track 1** of the diagnostic socket,
earth on **tracks 4** and **5** of the diagnostic socket.

Repair if necessary.

If the fault is still present, contact the Techline.

AFTER REPAIR	Turn on the dipped beam headlights. If the system does not perform initialisation, deal with the system faults.

GETtheMANUALS.org

ALP 2	No height adjustment on either or both headlights, regardless of vehicle load

NOTES	Only consult this customer complaint after a complete check with the diagnostic tool.

Confirm that initialisation is performed when the dipped headlights are switched on. If it is not, the actuators or a circuit component may be defective.
Check the condition of fuse F1K (5A) located in the vehicle's glovebox. Repair if necessary. Run command **AC012 Check actuator high and low position** to find out which headlight is faulty.
Check for mechanical blockage of the headlight (ball joint popped out, reflector stuck, actuator seized). Make sure that the sensors are properly positioned and mounted on the body, and check the condition of the linkage.
If all the checks described above fail to solve the fault, replace the faulty adjustment motor(s).

AFTER REPAIR	Turn on the dipped beam headlights. If the system does not perform initialisation, deal with the system faults.

GETtheMANUALS.org

ALP 3	Glare, or beam too high

NOTES	Only consult this customer complaint after a complete check with the diagnostic tool.

Check that headlights are mounted correctly.

Check that the right-hand and left-hand headlights light at the same level.
If the headlights differ in height, adjust the headlights manually.

Check the condition of system's mechanical components (sensor mounting, linkages).

Check whether the initial front and rear heights **PR032 Reference front height** and **PR033 Reference rear height** are similar.
If there is a major difference between these two parameters, perform computer calibration (**CF001** described in the **Configurations and Programming** section).

Run actuator command **AC012 Check actuator high and low position**.

If the light beam moves: adjust the headlights manually.

If the light beam does not move:
Check that the adjustment motors are actuated when the command is run (motor noise + vibration).

If the motors are actuated but the beam does not move, check the condition of the adjustment motor/headlight coupling rods. Replace the faulty headlight(s).

AFTER REPAIR	Carry out a check using the diagnostic tool. Deal with any faults found.

GETtheMANUALS.org

ALP 4	The left-hand and right-hand dipped headlight beams do not light at the same height

NOTES	Only consult this customer complaint after a complete check with the diagnostic tool.

Check that headlights are mounted correctly.

Check that the right-hand and left-hand headlights light at the same level.
If the headlights differ in height, adjust the headlights manually.

Check the condition of system's mechanical components (sensor mounting, linkages).

Check whether the initial front and rear heights **PR032 Reference front height** and **PR033 Reference rear height** are similar.
If there is a major difference between these two parameters, perform computer calibration (**CF001** described in the **Configurations and Programming** section).

Run actuator command **AC012 Check actuator high and low position**.

If the light beam moves: adjust the headlights manually.

If the light beam does not move:
Check that the adjustment motors are actuated when the command is run (motor noise + vibration).

If the motors are actuated but the beam does not move, check the condition of the adjustment motor/headlight coupling rods. Replace the faulty headlight(s).

AFTER REPAIR	Carry out a check using the diagnostic tool. Deal with any faults found.

GETtheMANUALS.org

VEL SATIS

8 Electrical equipment

83A INSTRUMENT PANEL

Vdiag No: 08

Fault finding - Introduction	83A - 1
Fault finding - Fault Interpretation	83A - 3
Fault finding - Conformity check	83A - 5
Fault finding - Interpretation of statuses	83A - 7
Fault finding - Commands	83A - 24
Fault finding - Configurations	83A - 26
Fault finding - Customer complaints	83A - 27
Fault finding - Fault finding charts	83A - 29

BJ0E - BJ0J - BJ0K - BJ0M - BJ0P - BJ0V

77 11 311 302 **FEBRUARY 2006** **EDITION ANGLAISE**

"The repair procedures given by the manufacturer in this document are based on the technical specifications current when it was prepared.

The methods may be modified as a result of changes introduced by the manufacturer in the production of the various component units and accessories from which his vehicles are constructed."

All rights reserved by Renault s.a.s.

Copying or translating, in part or in full, of this document or use of the service part reference numbering system is forbidden without the prior written authority of Renault s.a.s.

© Renault s.a.s. 2006

INSTRUMENT PANEL
Fault finding - Introduction

GETtheMANUALS.org

This generic fault finding strategy is valid for all the instrument panels for which the VDIAG is no. 08.

The values given in this repair manual are only indications.

It is essential to use: The vehicle wiring diagram

DESCRIPTION OF THE FAULT FINDING STAGES

FAULT CHECKING:

It is essential to start with this stage before any work is done on the vehicle.

1 - Order of priority

You should deal with electrical faults declared as present first, then those stored.
Other priorities are dealt with in the NOTES section in the fault finding procedure for the fault in question.
In any case, it is vital to check the status of the battery before starting fault finding as a low battery voltage risks interfering with the computer.

2 - Fault:

a) Present:

Deal with the fault as described in the
INTERPRETATION OF FAULTS section.

b) Stored:

Note the faults displayed.
Follow the instructions in the NOTES section of the fault in question.

If the fault is confirmed in the Notes section:
The fault is present once again. In this case, deal with the fault.

If the fault is not confirmed by the Notes section:
Carry out basic checks. Check:
- the electrical lines which correspond to the fault,
- the connectors for these lines (for oxidation, bent pins...),
- the resistance of the faulty component,
- the condition of the wires (insulation melted or cut, chafing...).

3 - Absence of faults:

If no more faults are indicated by the diagnostic tool, you should carry out a conformity check. This may help in detecting a problem.

GETtheMANUALS.org

CONFORMITY CHECK

The aim of the conformity check is to check statuses and parameters that do not produce a fault display on the diagnostic tool when they are outside the permitted tolerance values. Therefore, this phase is used:

– to run fault finding on faults that do not have a fault display, and which may correspond to a customer complaint,

– to check that the instrument panel is operating correctly and that there is no risk of a fault recurring shortly after repairs.

This section gives the fault finding procedures for statuses and parameters and the conditions for checking them.

If a status is not operating normally or a parameter is outside permitted tolerance values, you should consult the corresponding fault finding page.

CORRECT DIAGNOSTIC TOOL TEST

If the check using the diagnostic tool is satisfactory, but the customer complaint is still present, the problem should be dealt with using the **Customer complaint** diagnostic.

CONFIGURING AN INSTRUMENT PANEL

If replacing a top of the range instrument panel, **all the parameters** contained in this section have to be configured.

GETtheMANUALS.org

DF007 PRESENT OR STORED	FUEL GAUGE CIRCUIT CO : Open circuit CC : Short circuit between the **two tracks**, to earth or to **+12 V**

NOTES	Switch on the ignition, wait for **two minutes** to confirm the fault.

Check the connection of the instrument panel and fuel gauge connectors.
Check the wiring between the gauge and the instrument panel.

In particular, check **the insulation and continuity** of the connections between:

gauge **track A1** ⟶ instrument panel **track 22** of the grey connector
gauge **track B1** ⟶ instrument panel **track 25** of the grey connector

Disconnect the fuel gauge connector;
measure the resistance between **tracks A1** and **B1** of the gauge (it must be between **10** and **350 ohms**: **10 W** full, **350 W**: empty)
Check the installation of the gauge.

AFTER REPAIR	Run fault finding on the system. Clear the fault memory. Deal with any other possible faults.

tdbX731.0

GETtheMANUALS.org

DF016 PRESENT OR STORED	OIL LEVEL SENSOR CIRCUIT CO : Open circuit CC : Short circuit between the **two tracks**, to earth or to +12 V

NOTES	Switch on the ignition, wait for **two minutes** to confirm the fault.

Check the connection of the instrument panel and the oil level sensor connectors.
Check the wiring between the sensor and the instrument panel.

In particular, check **the insulation and continuity** of the connections between:

sensor **track 3** ⟶ instrument panel **track 26** of the grey connector
sensor **track 4** ⟶ instrument panel **track 21** of the grey connector

Disconnect the connector of the oil level sensor;
measure the resistance between **tracks 3** and **4** (it must be between **7** and **20 ohms**)
Check the installation of the oil level sensor.

AFTER REPAIR	Run fault finding on the system. Clear the fault memory. Deal with any other possible faults.

tdbX731.0

GETtheMANUALS.org

NOTES	The values indicated in this conformity check are given for reference purposes only. It is therefore essential to consult the corresponding chapter of this Repair Manual. **Test conditions:** ignition on.

Order	Function	Parameter or status Check or action		Display and notes	Fault finding
STATUSES WINDOW					
1	Voice synthesiser	**ET002:**	**+12 V** After ignition feed	**Status Active**	**In the event of a problem: Consult the fault finding procedure for the status opposite.**
		ET031:	Mute button: button pressed	**Status Active**	
		ET033:	Repeat button: button pressed	**Status Active**	
		ET018:	Bonnet open	**Status Confirmed**	
		ET037:	Seat belt contact: fasten driver's seat belt	**Status Active**	
2	Warning light control	**ET014:**	Windscreen washer level low	**Status not Confirmed** (if reservoir is full)	**In the event of a problem: Consult the fault finding procedure for the status opposite.**
		ET019:	Brake fluid level low	**Status not Confirmed** (if reservoir is full)	
		ET058:	Battery charge	**Status Inactive** (engine running)	
		ET007:	Oil pressure	**Status Inactive** (engine speed **> 1600 rpm**)	
		ET055:	Heated seats: press each of the heated seat buttons in succession	**Status Confirmed**	
		ET056:	No coolant temperature signal	**Status not Confirmed**	
		ET057:	Fuel flow signal absent	**Status not Confirmed**	
		AC003:	Opening elements warning light	**Opening elements warning light comes on**	
		AC004:	Seat belt warning light	**Seat belt warning light comes on**	

GETtheMANUALS.org

NOTES	The values indicated in this conformity check are given as examples. It is therefore essential to consult the corresponding chapter of this Repair Manual. **Test conditions:** ignition on.

Order	Function	Parameter or status Check or action		Display and notes	Fault finding
STATUSES WINDOW					
3	Others	**ET030:**	Trip computer scroll button, button pressed	**Status Active**	
		ET016:	Driver's door open	**Status Confirmed**	
		ET004:	Side lights control	**Status Confirmed**	
		ET008:	Vehicle speed signal **< 9mph (15 km/h)**: drive at more than **9mph (15 km/h)**	**Status Confirmed**	
		ET011:	Engine speed signal **< 500 rpm**: accelerate to **1000 rpm**.	**Status Confirmed**	

GETtheMANUALS.org

ET002	+12 V AFTER IGNITION FEED

NOTES	No faults should be present or stored Switch on ignition, status must be active.

Check **the insulation and continuity** of the wiring of **track 16 of the grey connector** on the instrument panel.
Check the instrument panel fuse in the passenger compartment fuse and relay box.
Check the connectors of the passenger compartment fuse and relay box.

AFTER REPAIR	Repeat the fault finding procedure on the system. Clear the fault memory. Deal with any other possible faults.

GETtheMANUALS.org

ET004	SIDE LIGHTS CONTROL

NOTES	There must be no faults present or stored. Switch on the ignition, turn the lighting control stalk: the status must be active. **IMPORTANT** The ignition circuit varies according to the vehicle equipment. Obtain a suitable diagram before starting the checks.

Check **the insulation and continuity** of the wiring between **track 27 of the grey connector** on the instrument panel and the passenger compartment fuse and relay box connector CGB2 **track B7**.
Check the side lights fuse on the passenger compartment fuse and relay box.
Check the connectors of the passenger compartment fuse and relay box.
Check the **insulation and continuity** of the connection between the stalk (**track B1**) and the passenger compartment fuse and relay box connector CGB5 **track B2**.
Check the supplies to the stalk (+ battery feed on **track B6**).
IMPORTANT
On some vehicles, the lights come on when the ignition is switched on, this is done through a relay on the fuse box and an optional relay.
This relay is controlled by the UCH.
In this case, consult the fault finding procedure for the vehicle's **passenger compartment connection unit**.

AFTER REPAIR	Repeat the fault finding procedure on the system. Clear the fault memory. Deal with any other possible faults.

tdbX731.0

GETtheMANUALS.org

ET007	OIL PRESSURE

NOTES	There must be no faults present or stored. Switch on ignition, start the engine (the engine speed must be above **1600 rpm**); the status must be inactive if the warning light is off.

Check **the insulation and continuity** of the wiring between **track 18 of the grey connector** on the instrument panel and the corresponding track of the oil pressure sensor.
Check the instrument panel connector and the oil pressure sensor connector.
Consult the Technical Note for the engine to check if the pressure switch has been installed properly and repair any oil leaks.

AFTER REPAIR	Repeat the fault finding procedure on the system. Clear the fault memory. Deal with any other possible faults.

GETtheMANUALS.org

ET008	VEHICLE SPEED SIGNAL < 9 mph (15 KM/H)

NOTES	There must be no faults present or stored. Switch on the ignition, drive.

In the event of failure, carry out a fault finding procedure on the multiplex network and the ABS.

AFTER REPAIR	Repeat the fault finding procedure on the system. Clear the fault memory. Deal with any other possible faults.

GETtheMANUALS.org

ET011	ENGINE SPEED SIGNAL < 500 rpm. The engine speed threshold value is an indicative value.

NOTES	There must be no faults present or stored. Switch on the ignition.

Increase the engine speed to **1000 rpm**.
If the computer has not detected that the engine speed threshold has been passed, carry out a fault finding procedure on the multiplex network and on the injection system.

AFTER REPAIR	Repeat the fault finding procedure on the system. Clear the fault memory. Deal with any other possible faults.

GETtheMANUALS.org

ET014	SCREEN WASH LEVEL LOW

NOTES	There must be no faults present or stored. Switch on ignition, fill up the washer fluid reservoir: the status must be inactive.

Check **the insulation and continuity** of the wiring between **track 13 of the grey connector** on the instrument panel and **track A** of the washer fluid reservoir (pay attention to the connection between the passenger compartment wiring loom and the front-end wiring loom).
Check the instrument panel connector and the washer fluid reservoir connector.
Check that there is an earth connection to the reservoir (**track B**)
Check that the reservoir's two tracks are not short-circuiting.
If necessary, replace the reservoir.

AFTER REPAIR	Repeat the fault finding procedure on the system. Clear the fault memory. Deal with any other possible faults.

tdbX731.0

GETtheMANUALS.org

ET016	DRIVER'S DOOR OPEN

NOTES	There must be no faults present or stored. Switch on the ignition, open the door.

Check **the insulation and continuity** between the instrument panel (**track 1 of the grey connector**) and the lock.
Check the driver's door wiring loom union.
Check the earth connection to the lock. (Caution. There are several locks. Refer to the corresponding driver's door diagram for the vehicle)

Check that the lock is working and in particular that it engages properly in the striker.

AFTER REPAIR	Repeat the fault finding procedure on the system. Clear the fault memory. Deal with any other possible faults.

tdbX731.0

GETtheMANUALS.org

ET018	BONNET OPEN

NOTES	There must be no faults present or stored. Switch on ignition, open the bonnet: the status must be active.

Check **the insulation and continuity** of the wiring between **track 19 of the grey connector** of the instrument panel; and the bonnet contact (track A).
Check **the insulation and continuity** of the wiring between earth and **track B** of the bonnet contact.
Check the instrument panel connector and the bonnet connector.
Check that the bonnet switch is firmly attached to the bodywork and that it operates properly.

AFTER REPAIR	Repeat the fault finding procedure on the system. Clear the fault memory. Deal with any other possible faults.

GETtheMANUALS.org

ET019	BRAKE FLUID LEVEL LOW

NOTES	There must be no faults present or stored. Switch on the ignition, check the brake fluid level in the reservoir.

Check **the insulation and continuity** of the wiring between **track 30 of the grey connector** on the instrument panel and **track 2** of the brake fluid reservoir.
Check the instrument panel connector and the reservoir connector.
Check that there is an earth connection to the sensor (**track 1**).
If necessary, replace the reservoir.

AFTER REPAIR	Repeat the fault finding procedure on the system. Clear the fault memory. Deal with any other possible faults.

GETtheMANUALS.org

ET030	TRIP COMPUTER SCROLL BUTTON

NOTES	There must be no faults present or stored. Switch on ignition, press the button: the status must be active.

Check **the insulation and continuity** of the wiring between **track 6 of the red connector** on the instrument panel and **track B7** of the windscreen wiper stalk.
Check the instrument panel connector and the windscreen wiper stalk connector.
Check that there is an earth connection to the stalk.
If necessary, replace the stalk.

AFTER REPAIR	Repeat the fault finding procedure on the system. Clear the fault memory. Deal with any other possible faults.

GETtheMANUALS.org

ET031	MUTE BUTTON

NOTES	No faults should be present or stored The vehicle must be equipped with a voice synthesiser. Switch on ignition, press the button: the status must be active.

Check **the insulation and continuity** of the wiring between **track 2 of the grey connector** on the instrument panel and **track A3** of the voice synthesiser control.
Check the instrument panel connector and the voice synthesiser control connector.
Check that there is an earth connection to the control system (**track A2**).
If necessary, change the set of buttons.

AFTER REPAIR	Repeat the fault finding procedure on the system. Clear the fault memory. Deal with any other possible faults.

GETtheMANUALS.org

ET033	REPEAT BUTTON

NOTES	There must be no faults present or stored. The vehicle must be equipped with a voice synthesiser. Switch on ignition, press the button: the status must be active.

Check **the insulation and continuity** of the wiring between **track 28 of the grey connector** on the instrument panel and **track A1** of the voice synthesiser control.
Check the instrument panel connector and the voice synthesiser control connector.
Check that there is an earth connection to the control system (**track A1**).
If necessary, change the set of buttons.

AFTER REPAIR	Repeat the fault finding procedure on the system. Clear the fault memory. Deal with any other possible faults.

GETtheMANUALS.org

ET037	SEAT BELT CONTACT

NOTES	There must be no faults present or stored. Switch on ignition, fasten the seat belt: the status must be active.

Check **the insulation and continuity** of the wiring between **track 6 of the grey connector** on the instrument panel and the driver's seat belt buckle **track A3** (also check the automatic connection between the passenger compartment wiring loom and the seat wiring loom).
Check the instrument panel connector and the seat belt anchorage stirrup connector.
Check that there is an earth connection to the seat belt anchorage stirrup (**track A1**).
If necessary, change the seat belt anchorage stirrup.

AFTER REPAIR	Repeat the fault finding procedure on the system. Clear the fault memory. Deal with any other possible faults.

GETtheMANUALS.org

ET055	HEATED SEATS

NOTES	There must be no faults present or stored. Switch on the ignition.

Check the instrument panel connection and the connectors.
Check **the insulation and continuity** between **track 15 of the grey connector** on the instrument panel and the heated seat switches (driver and passenger).
Ensure that the seats are correctly installed and that the automatic connector between the seat wiring loom and the passenger compartment wiring loom is secure.
Also check that there is an earth connection to the switches.

AFTER REPAIR	Repeat the fault finding procedure on the system. Clear the fault memory. Deal with any other possible faults.

GETtheMANUALS.org

ET056	COOLANT TEMPERATURE SIGNAL ABSENT

NOTES	There must be no faults present or stored. Switch on the ignition, start the engine.

Carry out a fault finding procedure on the multiplex network and the injection system.

AFTER REPAIR	Repeat the fault finding procedure on the system. Clear the fault memory. Deal with any other possible faults.

GETtheMANUALS.org

ET057	FUEL FLOW SIGNAL ABSENT

NOTES	There must be no faults present or stored. Switch on the ignition.

Carry out a fault finding procedure on the multiplex network and the injection system.

AFTER REPAIR	Repeat the fault finding procedure on the system. Clear the fault memory. Deal with any other possible faults.

GETtheMANUALS.org

ET058	BATTERY CHARGE

NOTES	There must be no faults present or stored. Switch on ignition, start the engine (the engine speed must be above **1000 rpm**); the status must be inactive if the warning light is off.

Check **the insulation and continuity** of the wiring between **track 14 of the grey connector** on the instrument panel and **track 1** of the black connector on the alternator.
Check the instrument panel connector and the alternator connector.
Check the alternator installation and mountings.
Check that the alternator is recharging the battery.

For more information on the alternator and the regulator, refer to the Technical Note for the vehicle's engine.

AFTER REPAIR	Repeat the fault finding procedure on the system. Clear the fault memory. Deal with any other possible faults.

GETtheMANUALS.org

AC003	OPENING ELEMENTS WARNING LIGHT

NOTES	This command only works on vehicles without navigation systems. Switch on the ignition, and run the command. The opening elements warning light comes on.

Check the + after ignition feed on **track A1** of the opening elements - belt alert module.

Verify **continuity and insulation** between:
Instrument panel **track 1** red connector → opening elements - belt alert module **track A3**

↓

Connect **track A3** of the opening elements - belt alert module to earth to test the opening elements warning light.
Change the module.

AFTER REPAIR	Repeat the fault finding procedure on the system. Clear the fault memory. Deal with any other possible faults.

tdbX731.0

GETtheMANUALS.org

AC004	SEAT BELT WARNING LIGHT

NOTES	This command only works on vehicles without navigation systems. Switch on the ignition, and run the command. The seat belt warning light comes on.

Check the + after ignition feed on **track A1** of the opening elements - belt alert module.

Verify **continuity and insulation** between:
Instrument panel **track 3** red connector → opening elements - belt alert module **track A2**

↓

Connect **track A2** of the opening elements - belt alert module to earth to test the opening elements warning light.
Change the module.

AFTER REPAIR	Repeat the fault finding procedure on the system. Clear the fault memory. Deal with any other possible faults.

tdbX731.0

GETtheMANUALS.org

NOTES	When the instrument panel has been configured disconnect and reconnect the battery so that the new configurations are taken into account.

No.	Configuration	Notes
CF125	**Language version:** **French** **English** **Italian** **German** **Spanish** **Dutch** **Portuguese** **Turkish**	
CF132	**Engine/gearbox type**	4 possibilities: P9X automatic gearbox P9X manual gearbox other automatic gearboxes other manual gearboxes
CF067 or CF068	**With proximity control** **Without proximity control**	To select whether or not cruise control with proximity control (front radar) is fitted
CF072 or CF071	**Type of vehicle:** **Laguna** **VEL SATIS**	To select the vehicle in which the instrument panel is to be installed.
CF069 or CF070	**Tyre pressure in bar** **Tyre pressure in psi**	To select the unit of measurement that the tyre pressures will be displayed in.

GETtheMANUALS.org

NOTES	Run fault finding on the multiplex network. In the case of a top-of-the-range instrument panel (with central display), carry out a fault finding procedure on the function.

One or more of the needles does/do not move	**ALP 1**
One or more of the needles does/do not move in accordance with the scale divisions	**ALP 1**
The display on the on board computer or central display is incomplete or blurred	**ALP 1**
Some of the on-board computer data is incorrect	**ALP 1**
Some of the on-board computer data has been replaced with dashes	**ALP 1**
The warning lights do not come on or messages are not displayed when there is a fault	**ALP 2**
The warning lights come on although there is no fault	**ALP 2**
The fuel gauge (apart from LPG) displays an implausible value	**ALP 1**
The oil gauge displays an incorrect measurement	**ALP 1**

GETtheMANUALS.org

Voice synthesiser does not work	**ALP 3**
The radio does not cut out when the voice synthesiser is issuing a message	**ALP 4**
The voice synthesiser messages are inconsistent (different language...)	**ALP 5**
Messages are issued when they should not be	**ALP 6**
The lighting dimmer on the instrument panel does not work	**ALP 7**
The panel does not light up when the side lights are on	**ALP 7**
The door open indicator light does not come on when the door is opened	**ALP 8**
Instrument panel self-test procedure	**PRO 1**

GETtheMANUALS.org

ALP 1	**One or more of the needles does/do not move** **One or more of the needles does/do not move in accordance with the scale divisions** **The display on the on board computer or central display is incomplete or blurred** **Some of the on-board computer data is incorrect** **Some of the on-board computer data has been replaced with dashes** **The fuel gauge (apart from LPG) displays an implausible value** **The oil gauge displays an incorrect measurement**

Run the instrument panel self-test procedure (**PRO 1**)

AFTER REPAIR	If an instrument panel has been replaced: remember to run a self-test procedure, to clear the faults, and to program the instrument panel.

GETtheMANUALS.org

ALP 2	**The warning lights do not come on or messages are not displayed when there is a fault** **The warning lights come on although there is no fault**

NOTES	Run fault finding on the multiplex network. Apply a fault finding procedure to the system that controls the warning light/message. Switch on the ignition.

List of warning lights lit up by a wire connection and not via the multiplex network:

Oil pressure fault (Caution. The engine speed must be **> 1600 rpm**; it is received via the CAN)
Washer fluid fault
Battery charge fault
Brake fluid fault
Dipped headlights on
Main beam headlights on
Front fog lights on
Rear fog lights on
Turn signals
Heated seat warning light
Immobiliser warning light
Minimum fuel level

If these warning lights do not come on or come on when they should not:
– check the continuity of the electrical wiring between the warning light and the warning light control (sensor, lighting stalk, alternator) and the instrument panel,
– check that the control system is working properly, that there is a feed to it and that there are no short-circuits on the connection.

The UCH detects if there is a bulb failure and transmits the bulb status on the multiplex network.

Replace the instrument panel

AFTER REPAIR	If an instrument panel has been replaced: remember to run a self-test procedure, to clear the faults, and to program the instrument panel.

tdbX731.0

GETtheMANUALS.org

ALP 3	Voice synthesiser does not work

NOTES	Switch on the ignition. Press the repeat button, check if a message is issued. Carry out a fault finding procedure on the multiplex network, in particular check that the network linking the instrument panel to the voice synthesiser is correct). Carry out fault finding on the instrument panel. Check the (language) configurations. Check that the presses of the repeat and mute buttons have been detected.

Check the feed (+ battery feed, earth and + ignition feed) to the instrument panel and the voice synthesiser.

↓

If the radio does not mute, check the multiplex network.
Switch off the ignition, disconnect and reconnect the battery. Switch the ignition back on so that the instrument panel is reconfigured correctly.

↓

Check the wiring between the voice synthesiser and the speaker:
- **track 14** of the voice synthesiser ⟶ **track 1** of the speaker
- **track 15** of the voice synthesiser ⟶ **track 2** of the speaker

Check the speaker

IMPORTANT
For vehicles fitted with a navigation or telematics system, the speaker used for the voice synthesiser is the same as that for the central communications unit.
Check that the central communications unit can output messages then check the wiring between the central communications unit and the voice synthesiser:
- **track 14** of the voice synthesiser ⟶ **track 14** green connector of the central communications unit
- **track 15** of the voice synthesiser ⟶ **track 15** green connector of the central communications unit

↓

Replace the voice synthesiser computer.
If the fault persists, replace the instrument panel.

AFTER REPAIR	If an instrument panel has been replaced: remember to run a self-test procedure, to clear the faults, and to program the instrument panel.

tdbX731.0

GETtheMANUALS.org

ALP 4	**The radio does not cut out when the voice synthesiser is issuing a message**

NOTES	Check that the radio is working correctly. Switch on the ignition.

Check the wiring between the voice synthesiser (**track 10**) and the radio (**track 3** of the black connector).
IMPORTANT
For vehicles with a navigation system or a telematics system, check the wiring between the voice synthesiser (**track 10**) and the central communications unit (**track 14** green connector of the central communications unit).

Disconnect the voice synthesiser.
Connect **track 10** of the connector to earth.
If the radio mutes, replace the voice synthesiser; if not, replace the radio.

AFTER REPAIR	If an instrument panel has been replaced: remember to run a self-test procedure, to clear the faults, and to program the instrument panel.

GETtheMANUALS.org

ALP 5	**The voice synthesiser messages are inconsistent (different language...)**

NOTES	Run fault finding on the multiplex network. Run fault finding on the instrument panel. Carry out a fault finding procedure on the systems that the messages refer to. Switch on the ignition.

Replace the voice synthesiser computer.
If the problem persists, replace the instrument panel.

AFTER REPAIR	If an instrument panel has been replaced: remember to run a self-test procedure, to clear the faults, and to program the instrument panel.

GETtheMANUALS.org

ALP 6	**Messages are issued when they should not be**

NOTES	Run fault finding on the multiplex network. Carry out a fault finding procedure on the system that the message refers to.

Replace the instrument panel.
If the problem persists, replace the voice synthesiser.

AFTER REPAIR	If an instrument panel has been replaced: remember to run a self-test procedure, to clear the faults, and to program the instrument panel.

GETtheMANUALS.org

ALP 7	**The lighting dimmer on the instrument panel does not work** **The panel does not light up when the side lights are on**

NOTES	Switch on the ignition. Switch on the side lights. Carry out a fault finding procedure on the instrument panel (check that the side lights are active).

Check that the voltage on **track 27** of the grey connector of the instrument is **12 V** when the side lights are switched.

Check **the continuity and insulation** of the connections between:

Instrument panel **track 5** of the red connector → Dimmer **track 2**

Dimmer **track 3** → Earth

Check that the resistance of the dimmer changes when the wheel is moved.
(resistance between **0** and **1000 ohms**).
If not, check that the air conditioning light varies and refer to the air conditioning fault finding procedure.

AFTER REPAIR	If an instrument panel has been replaced: remember to run a self-test procedure, to clear the faults, and to program the instrument panel.

GETtheMANUALS.org

ALP 8	**The door open indicator light does not come on when the door is opened**

NOTES	Switch on the ignition. Open a door.

Test the multiplex network.
Run fault finding on the door management system and check that the statuses for the doors change when the doors are opened and closed.

↓

Check the + after ignition feed on **track A1** of the opening elements - belt alert module.

Check **insulation and continuity** between:
track 1 of the instrument panel red connector → **track A3** of the opening elements - belt alert module

↓

Change the opening elements - belt alert module.

AFTER REPAIR	If an instrument panel has been replaced: remember to run a self-test procedure, to clear the faults, and to program the instrument panel.

tdbX731.0

GETtheMANUALS.org

PRO 1	Instrument panel self-test procedure

NOTES	There must be no faults present or stored. Press the button of the on-board computer (trip computer scroll button on the windscreen wiper stalk) Holding the button down, switch on the ignition (card inserted into the reader up to the stop). As soon as the needles begin to move, the test mode is run for **5 minutes**. Release the button. To skip from one screen to another on the on-board computer, briefly press the trip computer scroll button again. Press the km reset button to exit from the mode and **clear the faults**.

Check that the rev counter, speedometer, coolant temperature gauge and fuel level gauge needles are moving properly and following all the scale divisions.
If not, replace the instrument panel.

Check that all the digits on the on-board computer are lit up.
If not, replace the instrument panel.

The image on the central display changes every time the trip computer scroll button is pressed.
Replace the instrument panel if some images are blurred.

AFTER REPAIR	Carry out fault finding on the instrument panel. Rerun the self-test.

tdbX731.0

GETtheMANUALS.org

VEL SATIS

8 Electrical equipment

83A INSTRUMENT PANEL

Vdiag No.: 11

Fault finding - Introduction	83A - 2
Fault finding - System operation	83A - 7
Fault finding - Allocation of instrument panel tracks	83A - 10
Fault finding - Replacement of components	83A - 12
Fault finding - Configurations and programming	83A - 13
Fault finding - Fault summary table	83A - 19
Fault finding - Interpretation of faults	83A - 20
Fault finding - Conformity check	83A - 26
Fault finding - Status summary table	83A - 33
Fault finding - Interpretation of statuses	83A - 34
Fault finding - Parameter summary table	83A - 49
Fault finding - Interpretation of parameters	83A - 50
Fault finding - Command summary table	83A - 52
Fault finding - Interpretation of commands	83A - 53
Fault finding - Customer complaints	83A - 55
Diagnostic - Fault finding chart	83A - 57

V2 **Edition Anglaise**

"The repair procedures given by the manufacturer in this document are based on the technical specifications current when it was prepared.

The procedures may be modified as a result of changes introduced by the manufacturer in the production of the various component units and accessories from which his vehicles are constructed."

All rights reserved by Renault s.a.s.

Copying or translating, in part or in full, of this document or use of the service part reference numbering system is forbidden without the prior written authority of Renault s.a.s.

© Renault s.a.s.

GETtheMANUALS.org

1. SCOPE OF THIS DOCUMENT

This document presents the fault finding procedure applicable to all computers with the following specifications:

Vehicle(s): **VEL SATIS** *Function concerned:* **Instrument panel**	*Name of computer:* **Instrument panel** *Vdiag No.:* **11**

2. PREREQUISITES FOR FAULT FINDING

Documentation type

Fault finding procedures (this manual):
– Assisted fault finding (integrated into the diagnostic tool), Dialogys.
Wiring Diagrams:
– Visu-Schéma (CD-ROM), paper.

Type of diagnostic tools

CLIP + CAN probe

Special tooling required

Special tooling required	
	Multimeter
Elé. 1681	Universal bornier

3. RECAP

Procedure

In order to save energy, the Laguna II Phase 2 UCH cuts off the + after ignition feed after 3 minutes.

To perform fault finding on a computer, it is possible to force the + after ignition feed for 1 hour by applying the following procedure:
– press the card unlocking button,
– insert the card in the reader,
– if the ignition is switched on, press the Start button (interruption of timed + after ignition feed),
– press and hold the Start button for over 5 seconds until the engine immobiliser warning light starts to flash rapidly (4 Hz).

This forced + after ignition feed mode remains active for 1 hour.

Pressing the Start button or removing the card from the reader cuts off the forced + after ignition feed but does not cut off the timed forced + after ignition feed mode. As long as one hour has not elapsed the + after ignition feed function restarts the forced + after ignition feed for the remaining time.

GETtheMANUALS.org

Faults

Faults are declared as either present or stored (depending on whether they appeared in a certain context and have disappeared since, or whether they remain present but have not been diagnosed within the current context).

The **present** or **stored** status of faults should be taken into consideration when the diagnostic tool is used following the + after ignition supply being switched on (without acting on the system components).

For a **present fault**, apply the procedure described in the **Interpretation of faults** section.

For a **stored fault**, note the faults displayed and apply the instructions in the **Notes** section.

If the fault is **confirmed** when the instructions in the Notes section are applied, the fault is present. Deal with the fault.

If the fault is **not confirmed**, check:
- the electrical lines which correspond to the fault,
- the connectors on these lines (corrosion, bent pins, etc.),
- the resistance of the component detected as faulty,
- the condition of the wires (melted or split insulation, wear).

Conformity check

The aim of the conformity check is to check data that does not produce a fault display on the diagnostic tool when it is inconsistent. Therefore, this stage is used to:
- carry out fault finding on faults that do not have a fault display, and which may correspond to a customer complaint.
- check that the system is operating correctly and that there is no risk of a fault recurring after repair.

This section provides the fault finding procedures for statuses and parameters and the conditions for testing them.

If a status is not behaving normally or a parameter is outside the permitted tolerance values, consult the corresponding fault finding page.

Customer complaints - Fault finding chart

If the test with the diagnostic tool is OK but the customer complaint is still present, the fault should be treated by **Customer complaints**.

A summary of the overall procedure to follow is provided on the following page in the form of a flow chart

GETtheMANUALS.org

4. FAULT FINDING PROCEDURE

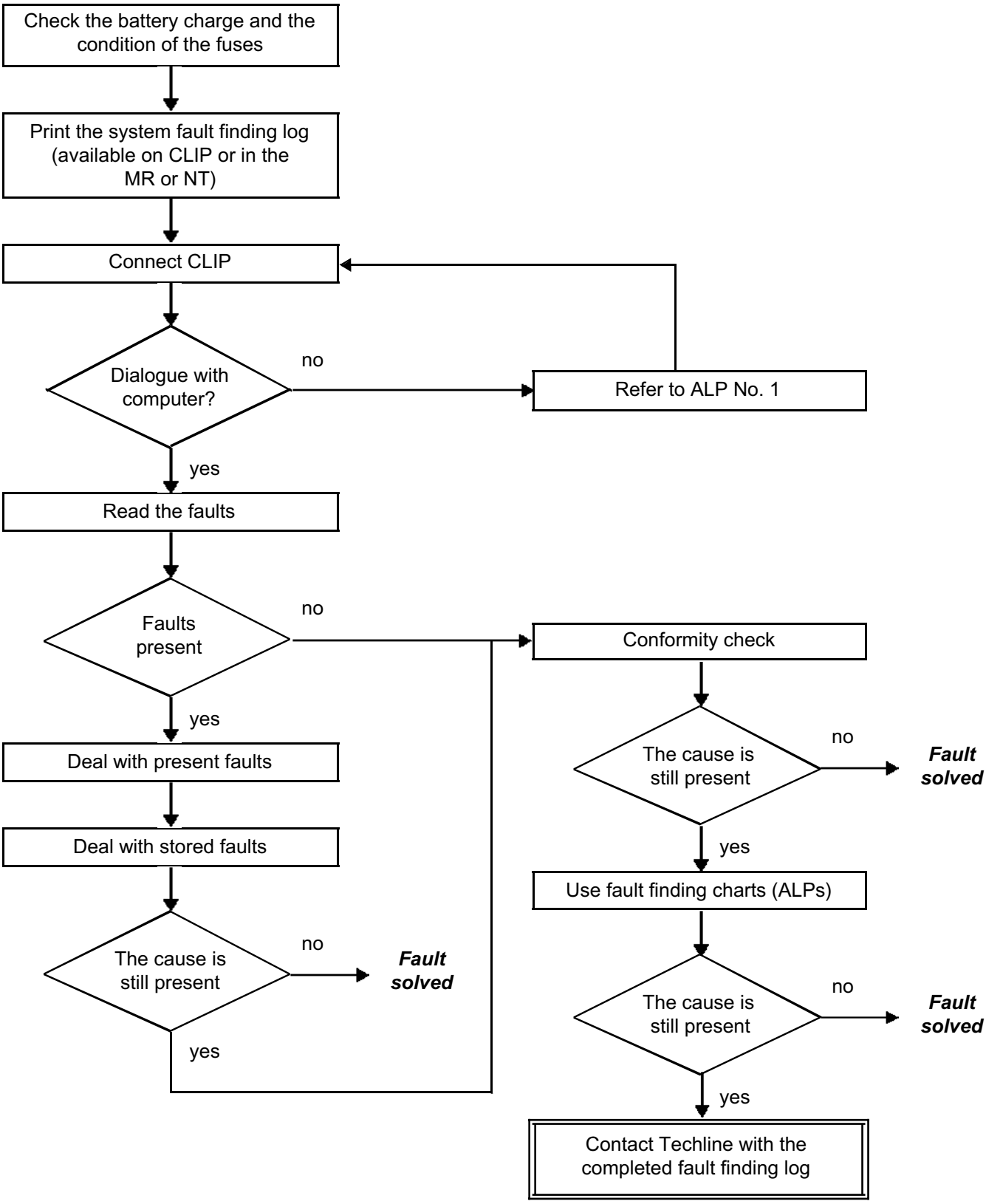

GETtheMANUALS.org

4. FAULT FINDING PROCEDURE (continued)

Wiring check

Fault finding problems

Disconnecting the connectors and/or manipulating the wiring harness may temporarily remove the cause of a fault.
Electrical measurements of voltage, resistance and insulation are generally correct, especially if the fault is not present when the analysis is made (stored fault).

Visual inspection

Look for damage under the bonnet and in the passenger compartment.
Carefully check the fuses, insulators and wiring harness routing.
Look for signs of oxidation.

Tactile inspection

While manipulating the wiring harness, use the diagnostic tool to note any change in fault status from stored to present.
Make sure that the connectors are properly locked.
Apply light pressure to the connectors.
Twist the wiring harness.
If there is a change in status, try to locate the source of the fault.

Inspection of each component

Disconnect the connectors and check the appearance of the clips and tabs, as well as their crimping (no crimping on the insulating section).
Make sure that the clips and tabs are properly locked in the sockets.
Make sure that no clips or tabs have been dislodged during connection.
Check the clip contact pressure using an appropriate model of tab.

Resistance check

Check the continuity of entire lines, then section by section.
Look for a short circuit to earth, to **+ 12 V** or to another wire.

If a fault is detected, repair or replace the wiring harness.

GETtheMANUALS.org

5. FAULT FINDING LOG

IMPORTANT

IMPORTANT
Any fault on a complex system requires thorough fault finding with the appropriate tools. The FAULT FINDING LOG, which should be completed during the fault finding procedure, ensures a record is kept of the procedure carried out. It is an essential document when consulting the manufacturer.

IT IS THEREFORE ESSENTIAL THAT THE FAULT FINDING LOG IS FILLED OUT EVERY TIME IT IS REQUESTED BY TECHLINE OR THE WARRANT RETURNS DEPARTMENT.

You will always be asked for this log:
- when requesting technical assistance from the Techline.
- for approval requests when replacing parts for which approval is obligatory.
- to be attached to monitored parts for which reimbursement is requested. The log is needed for warranty reimbursement, and enables better analysis of the parts removed.

6. SAFETY GUIDELINES

Safety rules must be observed during any work on a component to prevent any damage or injury:
- Check that the battery is properly charged to avoid damaging the computers in the event of a low load,
- Do not smoke,
- Use the appropriate tools.

GETtheMANUALS.org

1. Instrument panel functions:

– Features on petrol versions:
  - gas (LPG) indicator light,
  - rev counter up to **7125 rpm**.

– Features on diesel versions:
  - Exhaust particle filter indicator light,
  - rev counter up to **5000 rpm**.

– Needle gauge displays:
  - vehicle speed,
  - rev counter,
  - fuel level (petrol, diesel or gas),
  - engine coolant temperature.

– LCD displays:
  - mileometer and trip mileometer: ABS/ESP signal via the CAN,
  - oil level,
  - Trip Computer:
    - fuel consumed (petrol or diesel),
    - average consumption (petrol or diesel),
    - instantaneous consumption (petrol or diesel),
    - fuel range (petrol or diesel),
    - gas consumed,
    - average gas consumption,
    - fuel range,
    - distance travelled,
    - average speed,
    - mileage before oil change.

– Display on a single-colour dot matrix display informing the driver of the operating status of the vehicle using a system of colours:
  – white: status message (cruise control, keyless vehicle, etc.),
  – amber: hazard warning (tyre pressure monitor sensor not operational, etc.),
  – red: danger warning (coolant temperature, etc.).

– The information display is used for the following functions:
  - keyless vehicle,
  - tyre pressure monitor,
  - opening element statuses,
  - Automatic transmission indicator (option),
  - etc. (approximately 70 messages per language - 4 lines of 13 characters).

Notes
It is possible to enter instrument panel **self-test mode.** To do this, it is necessary to **switch on the ignition** while pressing the **trip computer scroll button** on the end of the wiper stalk.

GETtheMANUALS.org

– Management of a multifunction buzzer:
  The audible alert is used for the following functions:
  - indicating the operation of the direction indicator,
  - indicating that the lights have been left on accidentally,
  - indicating to the driver the activation/deactivation of automatic locking when driving,
  - indicating the failure of the childproof lock system,
  - indicating that the driver's position is stored,
  - indicating that the parking brake is not applied,
  - indicating that the driver's or passenger's seat belts are not fastened when driving,
  - signalling the start of the display of all the level 1 warnings (associated with the STOP warning light):
    – severe injection failure,
    – brake circuit or Electronic Braking Distribution fault,
    – battery charge circuit fault,
    – oil pressure fault,
    – engine coolant temperature warning,
    – immobiliser system fault,
    – lock fault,
    – parking brake fault,
  - indicating a first level tyre pressure monitor fault: major air leak or puncture,
  - low fuel warning,
  - indicating that a door or the tailgate is not correctly closed,
  - indicating that the handbrake is applied while the vehicle is being driven,
  - indicating a request to manage the cruise control,
  - indicating activation or deactivation of the cruise control,
  - indicating that a speed has been exceeded, for Arabian versions, where an overspeed warning is legally required.

  The audible alert is operational as soon as the instrument panel is started.
  The following buzzers can sound:
  - lights on,
  - direction indicators,
  - card left in reader,
  - automatic parking brake.

– Instrument panel dimmer: the instrument panel brightness can be adjusted using a button when the side lights are switched on.
– Certain functions or configurations are set by programming with the diagnostic tool.

– The oil level is measured after a set period; the voltage difference being measured across the terminals of the oil level sensor. This difference in voltage is processed by a circuit board, which sends this signal to the level indicator.

– For the "Change oil" and "Change oil as soon as possible" messages:
  The oil service interval distance and time values and the mileage before oil change are reinitialised after an oil change in accordance with two parameters: "Initial mileage before oil change and "Initial time before oil change".

  Reaching the 1st warning level: Oil change required soon
  When the mileage before oil change falls to 9,000 miles (1,500 km) OR the time interval falls to 2 months, the first warning level is reached: "Oil change required soon".

  Reaching the 2nd warning level: Change oil as soon as possible
  When the mileage before oil change OR the time before oil change to 0, the second warning level is reached and "Change oil as soon as possible" is displayed (with the SERVICE warning light coming on)

GETtheMANUALS.org

2. Display following defect mode

Trip Computer parameters	Fuel consumed fault present	ABS stored fault present	ECU stored fault present	LPG/CNG stored absence fault	petrol/ diesel sender stored fault present	Gas sender fault	fault(s) Currently being detected
Petrol/diesel consumed	dashes flashing at 2 Hz	no effect	dashes flashing at 2 Hz	no effect	no effect	no effect	Value remains unchanged
Petrol/diesel average consumption	dashes flashing at 2 Hz	dashes flashing at 2 Hz	dashes flashing at 2 Hz	no effect	no effect	no effect	Value remains unchanged
Petrol/diesel instantaneous consumption	dashes flashing at 2 Hz	dashes flashing at 2 Hz	dashes flashing at 2 Hz	no effect	no effect	no effect	Value remains unchanged
Petrol/diesel fuel range	dashes flashing at 2 Hz	dashes flashing at 2 Hz	dashes flashing at 2 Hz	no effect	dashes flashing at 2 Hz	no effect	Value remains unchanged
Gas consumed	dashes flashing at 2 Hz	no effect	dashes flashing at 2 Hz	dashes flashing at 2 Hz	no effect	no effect	Value remains unchanged
Average gas consumption	dashes flashing at 2 Hz	dashes flashing at 2 Hz	dashes flashing at 2 Hz	dashes flashing at 2 Hz	no effect	no effect	Value remains unchanged
Gas fuel range	dashes flashing at 2 Hz	dashes flashing at 2 Hz	dashes flashing at 2 Hz	dashes flashing at 2 Hz	no effect	dashes flashing at 2 Hz	Value remains unchanged
Distance travelled	no effect	dashes flashing at 2 Hz	no effect	no effect	no effect	no effect	Value remains unchanged
Average speed	no effect	dashes flashing at 2 Hz	no effect	no effect	no effect	no effect	Value remains unchanged
Oil service interval	no effect	dashes flashing at 2 Hz	no effect	no effect	no effect	no effect	Value remains unchanged
Miscellaneous	Letter "d" displayed on the 3rd digital line in Test mode	no effect	no effect	no effect	Letter "j" displayed on the 2nd digital line in test mode	no effect	no effect

GETtheMANUALS.org

Instrument panel computer, 30-track connector:

Tracks	Description
1	Driver's door
2	Right-hand direction indicator
3	Left-hand direction indicator
4	+ battery feed
5	Verlog Led control
6	Driver's seat belt
7	Safety Line output
8	Dipped headlights
9	Main beam headlights
10	Seat belt warning light supply
11	Rear fog lights
12	Front fog lights
13	Minimum washer fluid
14	Battery charge
15	Heated seats
16	+ After ignition feed
17	**RESERVE PHASE 1**
18	Oil pressure
19	Bonnet input
20	Not used
21	+ Oil level sensor
22	+ Fuel sender feed
23	Not used
24	Earth
25	- Fuel sender
26	- Oil level sensor
27	+ Side light feed
28	Repeat button
29	Parking brake input
30	Nivocode input

GETtheMANUALS.org

Instrument panel computer, 15-track connector:

Tracks	Description
1	Opening element indicator light output
2	Mute button
3	Negative seat belt warning light output
4	Not used
5	Dimmer
6	Odometer/trip computer scroll
7	Not used
8	Vehicle CAN_H copy output
9	Not used
10	Vehicle CAN_H
11	Vehicle CAN_L
12	**RESERVE PHASE 1**
13	Vehicle CAN_L copy output
14	Negative AIRBAG OFF warning light output
15	Positive AIRBAG OFF warning light feed

GETtheMANUALS.org

1. REPLACING, PROGRAMMING OR REPROGRAMMING THE INSTRUMENT PANEL:

For any operation involving the replacement of the instrument panel, follow the procedure described in the following paragraph (see **Configuration and programming**).

NOTE
After programming, reprogramming or replacing the instrument panel, it is essential to run the command **VP011 Fuel sender calibration**.

GETtheMANUALS.org

1. CONFIGURATIONS:

If the instrument panel has never been configured, the **NO PROG** message appears on the display when the ignition is switched on.

WARNING
It is necessary to take into account the configurations, in order that the new configuration values are used by the system.

CF or LC No.	Configuration	Note:
CF018 or LC001	**Reserve tank capacity**	
	→ LAGUNA II phase 2 (and phase 1)	= 6 l
	→ VELSATIS phase 2 (and phase 1)	= 9 l
CF019 or LC003	**Trip Computer display type**	
	→ Europe (l/100 km) → GB (miles/gallon) → Brazil (km/l)	Check the presence or absence of the instantaneous consumption trip computer screen
CF035 or LC006	**Tank capacity**	
	→ LAGUNA II phase 2 (phase 1)	= 70 l
	→ VELSATIS phase 2 (phase 1)	= 80 l
CF039 or LC065	**UCH**	
	→ VELSATIS → VELSATIS phase 2	
CF040 or LC066	**Particle filters**	
	→ None → With	If the vehicle is a VELSATIS phase 1, always configure CF040 to WITHOUT even if the vehicle is fitted with a particle filter.
CF049 or LC070	**Oil pressure warning threshold**	
	→ P9X/V4Y → Others	

GETtheMANUALS.org

CF050 or LC071	**Oil measurement temperature threshold**		
	→	V4Y	
	→	Others	
CF053 or LC072	**Oil measurement delay**		
	→	V4Y	
	→	Others	
CF054 or LC073	**Parking distance control function**		
	→	None	Front parking distance control configuration.
	→	With	
CF125 or LC002	**Language version**		
	→	French	
	→	English	
	→	Italian	
	→	German	
	→	Spanish	
	→	Dutch	
	→	Portuguese	
	→	Turkish	
	→	Japanese	
	→	Russian	
CF136 or LC047	**Tyre pressure units**		
	→	Bar	To select the unit of measurement that the tyre pressures will be displayed in.
	→	Psi	
CF137 or LC030	**Vehicle type**		
	→	VELSATIS	To select the vehicle in which the instrument panel is to be installed.

GETtheMANUALS.org

CF138 or LC049	**Type of fuel**	
	→ Petrol → Diesel	Petrol: Check that the rev counter indicates the scale to a maximum of 7000 rpm. Diesel: Check that the rev counter indicates the scale to a maximum of 6000 rpm, and that the preheating warning light comes on when the ignition is switched on. **IMPORTANT** **This check is important, because it also determines the correct operation of the gauges.**
CF139 or LC050	**Voice synthesiser**	
	→ None → With	**(VELSATIS only)**
CF140 or LC051	**Unit of distance**	
	→ Km → Miles	
CF141 or LC052	**Overspeed function - Arabia**	
	→ None → With	Driving **at more than 78 mph (130 km/h)**, you should hear a warning
CF142 or LC053	**Electronic stability program (ESP)**	
	→ With	If the vehicle is equipped with ESP: check, by pushing on the ESP OFF button, that "ESP deactivated" message definitely appears.
CF145 or LC056	**Tyre pressure monitor**	
	→ None → With	If the vehicle is equipped with a tyre pressure monitoring system: check that the vehicle profile does not remain displayed without the wheels and that there is no "Pressure not monitored" message (message indicating the absence of the tyre pressure monitoring system packets).

GETtheMANUALS.org

CF146 or LC057	**Automatic parking brake**	
	→ With	**IMPORTANT** If the instrument panel is configured **without automatic parking brake** and the vehicle is equipped with this function, the instrument panel displays **NO PROG** on the matrix display.
CF148 or LC059	**Automatic headlighting**	
	→ With → None	Disconnect the automatic headlights, and check that the "Auto Headlights Off" message is displayed.
CF149 or LC029	**Gearbox type**	
	→ Automatic gearbox connection → Sequential gearbox → Manual gearbox	If the vehicle has an automatic transmission or sequential gearbox, check that the instrument panel shows the gear selected. If the vehicle is not equipped with an automatic transmission or sequential gearbox, check that there is no "Check gearbox" message (this message indicates the absence of the automatic transmission frames if the instrument panel has been configured for an automatic transmission or sequential gearbox).
CF150 or LC061	**Cruise control/speed limiter**	
	→ With → None → Distance control/speed limiter (automatic)	If the vehicle is equipped with a Cruise Control - Speed Limiter function: check that the cruise control or speed limiter warning light comes on when the cruise control/ speed limiter button is pressed.
CF158 or LC064	**Seat belt reminder buzzer**	
	→ With → None	
CF196 or LC101	**Forward strategy on cruise control/speed limiter**	
	→ With → None	For vehicles fitted with cruise control: If this has been incorrectly configured, a difference in speed will appear between the regulator speed setpoint and the vehicle speed displayed by the instrument panel.

GETtheMANUALS.org

Oil service interval:

– The time and mileage before oil change displayed need to be reinitialised after the oil is changed in accordance with the two parameters which can be configured with the CLIP tool, **VP008 Distance before oil change: current in km** and **VP009 Time before oil change: current value in months**.

Reaching the 1st warning level: Oil change required soon

– When the mileage before oil change falls to 900 miles (1,500 km) OR the time before next oil change falls to **2 months** the first warning level is reached **Oil change A**

Reaching the 2nd warning level: Change oil as soon as possible

– When the mileage before oil change OR oil change interval reaches zero, the second warning level is reached and "Change oil as soon as possible" is displayed (with the **SERVICE** warning light coming on)

Oil change frequency:

This configuration must only be used if the instrument panel is **new**.
This configuration updates the new instrument panel, in accordance with two parameters which can be configured by the CLIP tool, **VP006 Oil change frequency in KM** and **VP007 Oil change frequency in months** from the old instrument panel.
Refer the driver's handbook for the vehicle for the mileage and time interval for the vehicle according to the country.
Ignition on, engine off. Run command **VP006 Oil change frequency in KM**.
Enter the Oil service interval in km.

Example of entry:
Using the Clip numeric keypad, type 20 to display 20,000 kilometres
or
enter 30 to display 30,000 kilometres

Special features of UK versions:
The new instrument panel is supplied configured, by default, in kilometres.
In addition to the language configuration **CF125 "Language version" (KM → Miles**), carry out the calculation below to allow the instrument panel to display consistent values between the **distance** before next oil change and the desired **oil service interval frequency**.
To display the oil service intervals in **Miles, multiply** the value in miles indicated in the maintenance service booklet by **10** then **divide** by **6**, to find the exact figure in **kilometres**.
After the value has been entered, the computer automatically performs the conversion into **miles** for the **oil change frequency**.
It is imperative to use the following procedure for correct functioning of the range and oil change frequency.

Example:
18,000 miles x 10 = 180,000 miles, then divide by 6 = 30,000 Km (**Enter 30**)

GETtheMANUALS.org

Odometer

This configuration must only be used if the instrument panel is **new**.
This configuration updates the mileometer on the new instrument panel, in accordance with a parameter configured by the CLIP tool, **VP010 Update mileometer**.
The update counter increments every time the instrument panel mileage is updated (maximum 15). This update counter is in the EEPROM and can only be reinitialised by the production or After-Sales services. The value of the update counter corresponds to a reset EEPROM value.

Calibration of the fuel sender

This configuration must only be used if the instrument panel is **new**.
This configuration reinitialises the measurement of the fuel level on the new instrument panel, in accordance with a parameter configured by the CLIP tool **VP011 Fuel sender calibration**.
Ignition on, engine off. Run command **VP011 Fuel sender calibration**.
The range of the nominal measurement is from **15 Ω** to **320 Ω** and the instrument panel converts the resistance value into litres.

2. PROGRAMMING:

None concerned.

GETtheMANUALS.org

Tool fault	Associated DTC	Diagnostic tool title
DF007	**9402**	Fuel sender circuit
DF009	**9407**	Oil pressure sensor circuit
DF016	**9401**	Oil level sensor circuit
DF018	**9405**	Instrument panel
DF019	**9404**	Battery voltage
DF020	**9406**	Steering column lock circuit

GETtheMANUALS.org

DF007 PRESENT OR STORED	FUEL SENDER CIRCUIT CO : Open circuit CC : Short circuit 1.DEF: Internal electronic fault 2.DEF: Voltage outside tolerance range

NOTES	**Conditions for applying the fault finding procedure to stored faults:** The fault is declared present when the ignition is switched on. Wait **2 minutes** to confirm the fault.

Manipulate the wiring harness between the fuel sender and the instrument panel until a change in fault status is produced. (Present ↔ Stored).
Look for possible damage to the harness, and check the **connection and condition** of the fuel sender unit and its connections.
Repair if necessary.

Check the **continuity and insulation** of the following connections:
Fuel sender unit **track A1** ⟶ **track 22 of the 30-track** instrument panel connector
Fuel sender unit **track B1** ⟶ **track 25 of the 30-track** instrument panel connector
Repair if necessary.

Measure the **resistance** between **tracks A1 and B1** of the fuel sender unit.
Replace the fuel sender unit if the **resistance** value is not: **350 Ω fuel tank in reserve**
10 Ω full tank

If the fault is still present, **contact Techline**.

AFTER REPAIR	Clear the computer memory. Carry out a road test and then recheck with the diagnostic tool.

GETtheMANUALS.org

DF009 PRESENT OR STORED	OIL PRESSURE SENSOR CIRCUIT 1.DEF: Signal incoherence

NOTES	**Conditions for applying the fault finding procedure to stored faults:** Switch on the ignition, start the engine (the speed should be above **500 rpm**); the status should be inactive if the indicator light is not lit.

Manipulate the wiring harness between the instrument panel and the oil level sensor in order to produce a change in fault status (Present ↔ Stored).
Look for possible damage to the harness, and check **the connection and condition** of the oil level sensor and its connections.
Repair if necessary.

Check **the condition and connection** of the instrument panel 30-track connector, bent tabs, oxidised, broken, etc.
Repair if necessary.

Check the **insulation** and **continuity** of the following connections:

- Pressure switch, transparent connector, **track 1** → **track 18 on the 30-track** instrument panel connector
- Pressure switch, grey connector, **track 2** → **track 18 on the 30-track** instrument panel connector

If the fault is still present, check the **R262 intermediate connector** on **track C5**.
Repair if necessary.

Check that the pressure switch is correctly fitted and check if there are any leaks (see **MR 353 or 402 Mechanical, 10A, Engine and peripherals**).

If the fault is still present, **contact Techline**.

AFTER REPAIR	Clear the computer memory. Carry out a road test followed by another check with the diagnostic tool.

GETtheMANUALS.org

DF016 PRESENT OR STORED	OIL LEVEL SENSOR CIRCUIT CO : Open circuit CC : Short circuit 1.DEF: Inconsistent current value 2.DEF: Internal electronic fault 3.DEF: Battery voltage out of range

NOTES	**Conditions for applying the fault finding procedure to stored faults:** The fault is declared present when the ignition is switched on. Wait **2 minutes** to confirm the fault.

Manipulate the wiring harness between the instrument panel and the oil level sensor in order to produce a change in fault status (Present ↔ Stored).
Look for possible damage to the harness, and check **the connection and condition** of the oil level sensor and its connections.
Repair if necessary.

Check **the condition and connection** of the instrument panel 30-track connector, bent tabs, oxidised, broken, etc.
Repair if necessary.

Check the **insulation and continuity** of the connections:
Oil level sensor **track 2** ⟶ **track 26** of the 30-track instrument panel connector
Oil level sensor **track 1** ⟶ **track 21** of the 30-track instrument panel connector
If the fault is still present, check the **R262 intermediate connector** on **tracks C6** and **C7**.
Repair if necessary.

Measure the resistance between the **tracks 3** and **4** of the oil level sensor.
Replace the oil level sensor if the **resistance** is not between **7** and **20 Ω**.

If the fault is still present, **contact Techline**.

AFTER REPAIR	Clear the computer memory. Carry out a road test and then recheck with the diagnostic tool.

GETtheMANUALS.org

DF018 PRESENT OR STORED	INSTRUMENT PANEL 1.DEF : EEPROM fault 2.DEF : Battery voltage too low

NOTES	**Special notes:** An EEPROM fault is declared when the instrument panel has detected an anomaly in the odometer control in EEPROM*. The mileage is no longer guaranteed to be correct. **Conditions for applying the fault finding procedure to stored faults:** The fault is declared present after the ignition is switched on if the battery voltage is below **5 V** or above **12 V**.

1.DEF	***NOTES***	None

If the fault is still present, contact Techline.

2.DEF	***NOTES***	None

Manipulate the wiring harness between the instrument panel and the battery until a change in fault status is produced (Present ↔ Stored).
Look for any damage to the wiring and check the **connection and condition** of the battery and its connections.
Repair if necessary.

Check **the condition and connection** of the instrument panel 30-track connector, bent tabs, oxidised, broken, etc.
Repair if necessary.

Check **the condition of the battery** and **the charge circuit**.
Check the **condition** of the vehicle **earths**.

Check for **+ 12 V** on **track 4 of the 30-track** instrument panel connector.
Repair if necessary.
With the ignition on, check for **+ 12 V** on **track 16 of the 30-track** instrument panel connector.
Repair if necessary.
Check for an **earth** on **track 24** of the **30-track** instrument panel connector.
Repair if necessary.

* EEPROM = Computer memory.

AFTER REPAIR	Clear the computer memory. Carry out a road test and then recheck with the diagnostic tool.

GETtheMANUALS.org

DF019 PRESENT OR STORED	BATTERY VOLTAGE 1.DEF: Voltage too weak 7 V 2.DEF: Feed voltage too high (between 16 and 18 volts) 3.DEF: Feed voltage too high (above 18 V) 4.DEF: Internal electronic fault

NOTES	**Special note:** If the battery voltage is greater than **18 V** due to a polarity inversion, check that the instrument panel is not damaged.

Manipulate the wiring harness between the instrument panel and the battery until a change in fault status is produced (Present ↔ Stored). Look for any damage to the wiring and check the **connection and condition** of the battery and its connections. Repair if necessary.
Check **the condition and connection** of the instrument panel 30-track connector, bent tabs, oxidised, broken, etc. Repair if necessary.
Check **the condition of the battery** and **the charge circuit**. Check the **condition** of the vehicle **earths**.
Check for **+ 12 V** on **track 4 of the 30-track** instrument panel connector. Repair if necessary. With the ignition on, check for **+ 12 V** on **track 16 of the 30-track** instrument panel connector. Repair if necessary. Check for an **earth** on **track 24** of the **30-track** instrument panel connector. Repair if necessary.
If the fault is still present, contact Techline.

AFTER REPAIR	Clear the computer memory. Carry out a road test followed by another check with the diagnostic tool.

GETtheMANUALS.org

DF020 PRESENT OR STORED	STEERING LOCK CIRCUIT CC.0 : Short circuit to earth

NOTES	**Conditions for applying the fault finding procedure to stored faults:** The fault is declared present after the ignition has been switched on.

Manipulate the wiring harness between the instrument panel and the electric steering lock in order to produce a change in fault status (Present ⇔ Stored).
Look for possible damage to the harness, and check the **condition and connection** of the electric steering column lock and its connections.
Repair if necessary.

Check the **insulation** and **continuity** of the connection:
Instrument panel, **30-track connector, track 7** ⟶ **track 5** of the electric steering column lock
Repair if necessary.

If the fault is still present, contact Techline.

AFTER REPAIR	Clear the computer memory. Carry out a road test and then recheck with the diagnostic tool.

GETtheMANUALS.org

NOTES	Only check the conformity after a **complete check** with the diagnostic tool. The values indicated in this conformity check are given as examples. **Application condition:** Engine **stopped, ignition on**.

MAIN COMPUTER STATUSES AND PARAMETERS

Order	Function	Parameter, Status checked or Action		Display and Notes	Fault finding
1	Power supply	**ET002:**	+ 12 V after ignition feed	**With the ignition on, the status should be PRESENT**	In the event of a fault, refer to the interpretation of status **ET002 + 12 V after ignition feed**.
2	Battery voltage	**PR110:**	Battery voltage	**8 V < PR110 < 16 V**	If there is a fault, consult the interpretation of fault **DF019 Battery voltage**.
3		**ET058:**	Battery charge	**OK**	In the event of a fault, refer to the interpretation of status **ET058 Battery charge**.
4	Vehicle speed	**ET008:**	Vehicle speed signal < 9 mph (15 km/h)	**YES**	In the event of a fault, refer to the interpretation of status **ET008 Vehicle speed signal < 9 mph (15 km/h)**.
5	Temperature	**ET056:**	Coolant temperature: no signal	**NO**	In the event of a fault consult the interpretation for status **ET056 Coolant temperature: no signal**.

GETtheMANUALS.org

NOTES	Only check the conformity after a **complete check** with the diagnostic tool. The values indicated in this conformity check are given as examples. **Application condition:** Engine **stopped, ignition on**.

TRIP COMPUTER

Order	Function	Parameter, Status checked or Action		Display and Notes	Fault finding
1	Radio	**ET030:**	Trip computer scroll button	**DEPRESSED RELEASED**	In the event of a fault, consult the interpretation of status **ET030 Trip computer scroll button**.
2		**ET034:**	Trip Computer reset button	**DEPRESSED RELEASED**	If the fault is still present, contact Techline.
3		**ET031:**	Mute button	**DEPRESSED RELEASED**	In the event of a fault, refer to the interpretation of status **ET031 Mute button**.
4		**ET033:**	Repeat button	**DEPRESSED RELEASED**	In the event of a fault, refer to the interpretation of status **ET033 Repeat button**.
5	Fuel	**PR003:**	Fuel consumption.	**Indicates the fuel consumption.**	If there is a fault, consult the interpretation for fault **DF007 Fuel sender unit circuit**.
6		**PR004:**	LPG fuel consumption	**Indicates the LPG fuel consumption.,**	
7		**PR112:**	Fuel flow	**Indicates fuel flow.**	
8	Instrument panel	**AC011:**	Symbol display	**This command allows the matrix information display to be viewed in three colours.**	If the fault is still present, contact Techline.
9		**AC015:**	Voice synthesiser	**With the ignition on and engine stopped, the voice synthesiser emits a message.**	

GETtheMANUALS.org

NOTES	Only check the conformity after a **complete check** with the diagnostic tool. The values indicated in this conformity check are given as examples. **Application condition:** Engine **stopped, ignition on**.

DISPLAY

Order	Function	Parameter, Status checked or Action		Display and Notes	Fault finding
1	Vehicle speed	**ET008:**	Vehicle speed signal < 9 mph (15 km/h)	**YES**	In the event of a fault, refer to the interpretation of status **ET008 Vehicle speed signal < 9 mph (15 km/h)**.
2	Washer fluid	**ET014:**	minimum washer fluid level	**Indicates the screen washer fluid level.** **YES:** Level too low **NO:** Level sufficient	In the event of a fault consult the interpretation of status **ET014 Minimum washer fluid level**.
3	Central door locking	**ET016:**	Driver's door open	**YES:** Door open **NO:** Door closed	In the event of a fault, refer to the interpretation of status **ET016 Driver's door open**.
4		**ET018:**	Bonnet open	**YES:** Bonnet open **NO:** Bonnet closed	In the event of a fault, refer to the interpretation of status **ET018 Bonnet open**.
5	Brake fluid level light	**ET019:**	minimum brake fluid level	**Indicates the brake fluid level.** **YES:** Level too low **NO:** Level sufficient	In the event of a fault, consult the interpretation of status **ET019 Minimum brake fluid level**.
6	Heated seat	**ET055:**	Heated seat	**Turn on the heated seat function, the status should be ACTIVE.**	In the event of a fault, refer to the interpretation of status **ET055 Heated seat**.
7	Oil pressure	**ET096:**	Oil pressure contact	**CLOSED** **OPEN**	If the event of a fault, consult the interpretation for fault **DF009 Oil pressure sensor circuit**.

GETtheMANUALS.org

NOTES	Only check the conformity after a **complete check** with the diagnostic tool. The values indicated in this conformity check are given as examples. **Application condition:** Engine **stopped, ignition on**.

DISPLAY (continued 1)

Order	Function	Parameter, Status checked or Action	Display and Notes	Fault finding
8	Parking brake	**ET097:** Parking brake	**Indicates parking brake position (APPLIED/RELEASE) except for automatic parking brakes; in which case the status is INACTIVE**	In the event of a fault, refer to the interpretation of status **ET097 Parking brake**.
9	Seat belt	**ET098:** Driver's seat belt contact	**With the ignition on, trigger the driver's seat belt, the status should be OPEN.**	In the event of a fault, refer to the interpretation of status **ET098 Driver's seat belt contact**.
10		**ET156:** Passenger seat belt contact	**With the ignition on, trigger the passenger seat belt, the status should be OPEN.**	In the event of a fault, perform fault finding on the airbag and pretensioner computer (see **38C, ABS**).
11	Exterior lighting	**ET157:** Dipped headlights signal	**PRESENT**	In the event of a fault, perform fault finding on the UCH (see **87B, Passenger compartment connection unit**).
12		**ET158:** Side lights signal		
13		**ET159:** Front fog light signal		
14		**ET160:** Rear fog light signal		
15	Instrument panel lighting	**ET107:** Lighting dimmer wheel	**With the ignition on, dipped headlights lit, the brightness will vary, the status should be CONNECTED.**	In the event of a fault contact Techline.

GETtheMANUALS.org

NOTES	Only check the conformity after a **complete check** with the diagnostic tool. The values indicated in this conformity check are given as examples. **Application condition:** Engine **stopped, ignition on**.

DISPLAY (continued 2)

Order	Function	Parameter, Status checked or Action		Display and Notes	Fault finding
16		**AC009:**	Instrument panel warning lights	**The instrument panel warning lights are activated in several stages. The warning lights are lit one after another, then the command lights all the warning lights.**	If the fault is still present, contact Techline.
17		**AC008:**	Instrument panel needle gauges	**With the ignition switched on and the engine stopped, the needles should move.**	
18		**AC005:**	Display test	**With the ignition switched on and the engine stopped, all the displays on the instrument panel light up.**	
19		**AC010:**	Lighting	**Following activation of all the instrument panel warning lights, the brightness will vary between 25 %, 50 %, 75 % then 100 % of the maximum brightness for 4 seconds each time.**	
20		**AC004:**	Seat belt warning light	**Seat belt warning light lighting.**	
21		**AC003:**	Opening element indicator light	**Opening element indicator light lighting.**	
22	Buzzer	**AC006:**	Buzzer	**With the ignition on and engine off, the buzzer should sound.**	

GETtheMANUALS.org

NOTES	Only check the conformity after a **complete check** with the diagnostic tool. The values indicated in this conformity check are given as examples. **Application condition:** Engine **stopped, ignition on**.

GAUGES

Order	Function	Parameter, Status checked or Action	Display and Notes	Fault finding
1	Fuel	**ET110:** Fuel sender defect mode	**NO** **Warns of a fuel level fault**	In the event of a fault, apply the fault finding procedure **DF007 Fuel sender circuit**.
2		**PR002:** Fuel sender resistance	**PR002 empty = 5 Ω** **PR002 full = 350 Ω**	
3		**PR010:** Tank capacity	**Indicates the volume of fuel contained in the tank.** **0 < PR010 < 80 l**	In the event of a fault, check that configuration **LC006 Fuel tank capacity** has been performed. If the fault is still present, contact the Techline.
4	Oil level	**PR011:** Oil level sensor voltage	**Maximum oil level:** **≤ 190 mV** **Minimum oil level:** **≥ 440 mV**	If there is a fault, consult the interpretation for fault **DF016 Oil level sensor circuit**.

GETtheMANUALS.org

NOTES	Only check the conformity after a **complete check** with the diagnostic tool. The values indicated in this conformity check are given as examples. **Application condition:** Engine **stopped, ignition on**.

MILEOMETER

Order	Function	Parameter, Status checked or Action		Display and Notes	Fault finding
1	Oil change frequency	**PR005:**	Oil change frequency in km	**Indicates the oil change frequency in km.**	If the fault is still present, contact Techline.
2		**PR006:**	Oil change frequency in months	**Indicates the oil change frequency in months.**	
3	Oil service interval	**PR007:**	Oil service interval: current value in km	**Indicates the distance remaining to the oil service in km. (this value should be equal to or below the frequency). PR005 - PR009 = PR007**	
4		**PR008:**	Oil service interval: actual value in months	**Indicates the oil service interval in months. (this value should be equal to or below the frequency).**	
5	Odometer	**PR009:**	Odometer	**Indicates the counter value in km.**	

GETtheMANUALS.org

Tool status	Diagnostic tool title
ET002	+ 12 V after ignition feed
ET008	Vehicle speed signal < 9 mph (15 km/h)
ET014	Minimum washer fluid level
ET016	Driver's door open
ET018	Bonnet open
ET019	Minimum brake fluid level
ET030	Trip computer scroll button
ET031	Mute button
ET033	Repeat button
ET034	Trip Computer reset button
ET055	Heated seats
ET056	Coolant temperature: no signal
ET058	Battery charge
ET096	Oil pressure contact
ET097	Parking brake
ET098	Driver's seat belt contact
ET107	Lighting dimmer wheel
ET110	Fuel sender defect mode
ET156	Passenger seat belt contact
ET157	Dipped headlights signal
ET158	Side lights signal
ET159	Front fog light signal
ET160	Rear fog light signal

GETtheMANUALS.org

ET002	+ 12 V AFTER IGNITION FEED

NOTES	There must be no present or stored faults. Switch on the ignition, status **ET002** should be **PRESENT**.

Check instrument panel fuse **F11 (20A)** on the Passenger Compartment Fuse and Relay Board.
Check the passenger compartment fuse and relay box connectors.

Check **the insulation and continuity** of the wiring between:

Fuse and relay box, **green connector, track 1** → **Track B9, black connector,** passenger compartment fuse and relay box

Passenger compartment fuse and relay box, **black connector, track J5** → **Track 4** of the instrument panel **30-track connector**

Observe the Verlog diode.
Repair if necessary.

AFTER REPAIR	Carry out another fault finding check on the system. Deal with any other faults. Clear the stored faults.

GETtheMANUALS.org

ET008	VEHICLE SPEED SIGNAL < 9 MPH (15 KM/H)

NOTES	There must be no present or stored faults. Switch on the ignition and carry out a road test.

In the event of a fault, **carry out a fault finding procedure on the multiplex network** and the **ABS** (see **88B, Multiplex network** and **38C, ABS**).

AFTER REPAIR	Carry out another fault finding check on the system. Deal with any other faults. Clear the stored faults.

GETtheMANUALS.org

ET014	SCREEN WASH LEVEL MINIMUM

NOTES	There must be no present or stored faults. Switch on the ignition, fill the washer fluid reservoir: status **ET014** should be **YES**.

Check the instrument panel connector and the washer fluid reservoir connector.
Check that the **earth** is properly connected to the reservoir on **track 2**. Repair if necessary.
Check **the insulation and continuity** of the connection: Instrument panel, **30-track connector, track 13** ⟶ **track 1** of the washer fluid reservoir If the fault is still present, check **intermediate connector R265** on **track C7**. Repair if necessary.
Check that the reservoir's two tracks are not short-circuiting. If necessary, replace the reservoir.

IMPORTANT
The warning message is only displayed for 30 seconds on activation of the after ignition feed if the fault is already present, otherwise 8 seconds in fault finding.
The fault is confirmed after 30 seconds.

AFTER REPAIR	Carry out another fault finding check on the system. Deal with any other faults. Clear the stored faults.

GETtheMANUALS.org

ET016	DRIVER'S DOOR OPEN

NOTES	There must be no present or stored faults. Switch on the ignition, open the door, status **ET016** should be **YES**.

Check the driver's door wiring harness connector.
Check the **earth** on **track D** of the lock.
IMPORTANT
There are several locks (see **Wiring Diagram Technical Note, Velsatis**).

Check **the continuity and insulation** between:
Instrument panel, **30-track connector, track 1** ⟶ **Track C** of the driver's door locking function
If the fault is still present, check **intermediate connector R153** on **track B10**.
Repair if necessary.

Check that the lock is working and in particular that it engages properly in the striker.

AFTER REPAIR	Carry out another fault finding check on the system. Deal with any other faults. Clear the stored faults.

GETtheMANUALS.org

ET018	BONNET OPEN

NOTES	There must be no present or stored faults. Switch on the ignition, open the bonnet, status **ET018** should be **YES**.

Check the instrument panel connector and the bonnet connector. Check that the bonnet switch is firmly attached to the bodywork and that it operates properly.
Check **the insulation and continuity** of the wiring between: Instrument panel **30-track connector, track 19** ⟶ **Track 2** of the bonnet switch Repair if necessary.
Check **the insulation and continuity** of the wiring between: Bonnet switch **track 1** ⟶ Vehicle earth If the fault is still present, check **intermediate connector R265** on **track B1**. Repair if necessary.

AFTER REPAIR	Carry out another fault finding check on the system. Deal with any other faults. Clear the stored faults.

GETtheMANUALS.org

ET019	MINIMUM BRAKE FLUID LEVEL

NOTES	There must be no present or stored faults. Switch on the ignition, check the brake fluid level in the reservoir.

Check the instrument panel connector and the reservoir connector.
Check **the insulation and continuity** of the wiring between: Instrument panel **30-track connector, track 30** ⟶ **track 2** of the brake fluid reservoir Repair if necessary.
Check that the earth is properly connected to **track 1** of the brake fluid reservoir level sensor. If necessary, replace the reservoir.

AFTER REPAIR	Carry out another fault finding check on the system. Deal with any other faults. Clear the stored faults.

GETtheMANUALS.org

ET030	TRIP COMPUTER SCROLL BUTTON

NOTES	There must be no present or stored faults. Switch on the ignition, press the button: status **ET030** should be **PRESSED**.

Check the instrument panel connector and the wiper stalk connector.
Check **the insulation and continuity** of the wiring between: Instrument panel, **15-track connector, track 6** ⟶ **track B7** of the windscreen wiper stalk Repair if necessary.
Check that the **earth** on **track B5** is properly connected to the stalk. If necessary, replace the stalk.

AFTER REPAIR	Carry out another fault finding check on the system. Deal with any other faults. Clear the stored faults.

GETtheMANUALS.org

ET031	MUTE BUTTON

NOTES	There must be no present or stored faults. The vehicle must be equipped with a voice synthesiser. Switch on the ignition, press the button: status **ET031** should be **PRESSED**.

Manipulate the wiring harness between the instrument panel connector and the voice synthesis control connector, to produce a change in fault status.
Look for any damage to the wiring harness, check the **connection and condition** of the voice synthesis computer and its connections.
Repair if necessary.

Carry out a fault finding procedure on the multiplex network (see **88B Multiplex network**).

Check **the insulation and continuity** of the wiring between:
Instrument panel, **15-track connector, track 2** ⟶ **track A3** of the voice synthesis control
Repair if necessary.

Check that the **earth** is properly connected to control **track A2**.
If necessary, change the set of buttons.

AFTER REPAIR	Carry out another fault finding check on the system. Deal with any other faults. Clear the stored faults.

GETtheMANUALS.org

ET033	REPEAT BUTTON

NOTES	There must be no present or stored faults. The vehicle must be equipped with a voice synthesiser. Switch on the ignition, press the button: status **ET033** should be **PRESSED**.

Manipulate the wiring harness between the instrument panel connector and the voice synthesis control connector, to produce a change in fault status.
Look for any damage to the wiring harness, check the **connection and condition** of the voice synthesis computer and its connections.
Repair if necessary.

Carry out a fault finding procedure on the multiplex network (see **88B Multiplex network**).

Check **the insulation and continuity** of the wiring between:
Instrument panel, **30-track connector, track 28** ⟶ **track A1** of the voice synthesis control
Repair if necessary.

Check that the earth is properly connected to control on **track A2**.
If necessary, change the set of buttons.

AFTER REPAIR	Carry out another fault finding check on the system. Deal with any other faults. Clear the stored faults.

GETtheMANUALS.org

ET055	HEATED SEAT

NOTES	There must be no present or stored faults. Switch on the ignition, press the heated seat button: status **ET031** should be **ACTIVE**.

Check the instrument panel connection and the connectors.
Check **the continuity and insulation** between: Instrument panel, **30-track connector, track 15** ⟶ **Track A1** of the heated seat switches (driver's and passenger) If the fault is still present, check the **R334** and **R335 intermediate connectors** on **track 16**. Repair if necessary.
Check that the seats are properly installed and that the automatic connectors (**R334** and **R335**) between the seat wiring harness and the passenger compartment wiring harness are correctly locked.
Also check that the **earth** on **track B1** is connected to these switches.

AFTER REPAIR	Carry out another fault finding check on the system. Deal with any other faults. Clear the stored faults.

GETtheMANUALS.org

ET056	COOLANT TEMPERATURE SIGNAL ABSENT

NOTES	There must be no present or stored faults. Switch on the ignition, start the engine.

Perform fault finding on the **multiplex network** and the **injection** (see **88B, Multiplex network** and **17B, Petrol injection** or **13B, Diesel injection**).

AFTER REPAIR	Carry out another fault finding check on the system. Deal with any other faults. Clear the stored faults.

GETtheMANUALS.org

ET058	BATTERY CHARGE

NOTES	There must be no present or stored faults. Switch on the ignition, start the engine (the speed should be above **1000 rpm**); status **ET058** should be **OK** if the warning light is not lit. Check that the speed is above **400 rpm** for more than **10 seconds** before registering a possible fault.

Manipulate the wiring harness between the instrument panel connector and the alternator connector, in order to produce a change in status.
Look for any harness damage, and check **the condition and connection** of the alternator and its connections.
Repair if necessary.

Check the alternator installation and mountings.
Check that the alternator is recharging the battery.

Check **the insulation and continuity** of the wiring between:
Instrument panel, **30-track connector, track 14** ⟶ **track 1** of the alternator black connector
If the fault is still present, check **intermediate connector R262** on **track C4**.
Repair if necessary.

If status **ET058** does not change to "**INACTIVE**", check the operation signals of the alternator (see **MR 355 or 402 Mechanical, 16A, Starting - Charging**).

AFTER REPAIR	Carry out another fault finding check on the system. Deal with any other faults. Clear the stored faults.

GETtheMANUALS.org

ET097	PARKING BRAKE

NOTES	There must be no present or stored faults. Switch on the ignition, apply the brake: status **ET097** should be **APPLIED**.
	Special Note Check whether the vehicle is fitted with an automatic parking brake by referring to configuration **LC057 Automatic parking brake**. If it does have this function, status **ET097** is **RELEASED**.

Manipulate the wiring harness between the instrument panel connector and the handbrake connector in order to produce a change in status.
Look for possible damage to the harness, and check the **connection and condition** of the handbrake and its connections.
Repair if necessary.

Check that the handbrake is firmly attached to the bodywork and that it operates correctly.

Check **the insulation and continuity** of the wiring between:
Instrument panel, **30-track connector, track 29** ⟶ **Track 1** of the handbrake
Repair if necessary.

AFTER REPAIR	Carry out another fault finding check on the system. Deal with any other faults. Clear the stored faults.

GETtheMANUALS.org

ET098	DRIVER'S SEAT BELT CONTACT

NOTES	There must be no present or stored faults. Switch on the ignition, fasten the seat belt: status **ET098** should be **OPEN**.

Check the instrument panel connector and the seat belt anchorage stirrup connector.
Manipulate the wiring harness between the instrument panel connector and the stirrup/seat belt anchorage, to produce a change in fault status.
Look for possible damage to the harness, and check **the connection and the condition** of the stirrup/seat belt anchorage and its connections.
Repair if necessary.

Check **the insulation and continuity** of the wiring between:
Instrument panel, **30-track connector, track 6** ⟶ **track A2** of the driver's seat belt clamp
If the fault is still present, check the **R335 intermediate connector** on **track 2**.
Repair if necessary.

Check that there is an earth connection on the seat belt anchorage/stirrup (**track A1**).
If necessary, change the seat belt anchorage stirrup.

AFTER REPAIR	Carry out another fault finding check on the system. Deal with any other faults. Clear the stored faults.

GETtheMANUALS.org

ET110	DRIVER'S SEAT BELT CONTACT

NOTES	If in short circuit for over 100 seconds, the needle fluctuates between full and half-full. If in open circuit for over 100 seconds, the needle fluctuates between half-full and 0.

Check the **insulation and continuity** of the connections:
Instrument panel, **30-track connector, track 22** ⟶ track A1 of the fuel sender
Instrument panel, **30-track connector, track 25** ⟶ track B1 of the fuel sender
Repair if necessary.

AFTER REPAIR	Carry out another fault finding check on the system. Deal with any other faults. Clear the stored faults.

GETtheMANUALS.org

Tool parameter	Diagnostic tool title
PR002	Fuel sender unit resistance
PR003	Fuel consumption
PR004	LPG fuel consumption
PR005	Oil change frequency in km
PR006	Oil change frequency in months
PR007	Distance to next oil service: current value in km
PR008	Time to next oil service: current value in months
PR009	Odometer
PR010	Fuel tank capacity
PR011	Oil level sensor voltage
PR110	Battery voltage
PR112	Fuel flow

GETtheMANUALS.org

PR110	BATTERY VOLTAGE

NOTES	None

Check that there are no faults.
If the voltage is at minimum:
Check the battery and the charge circuit.
If the voltage is at maximum:
Check that the charging voltage is correct with and without electrical consumers switched on.

Check the **insulation, continuity and the absence of interference resistance** on the following connection:
Instrument panel, **30-track connector, track 04** ⟶ **+ battery feed**
Repair if necessary.

GETtheMANUALS.org

PR112	FUEL FLOW

NOTES	With the engine idling, the flow should be around **0**. Vary the engine speed to confirm the increase in flow.
	Note: A fuel flow signal fault causes an inconsistency in trip computer operation.

Perform a **multiplex network** and **injection test** (see **88B, Multiplex network** and **17B, Petrol injection** or **13B, Diesel injection**).

GETtheMANUALS.org

Tool commands	Diagnostic tool title
SC001	Oil service interval
RZ001	Fault memory
AC003	Opening element indicator light
AC004	Seat belt warning light
AC005	Display test
AC006	Audible Alert (Buzzer)
AC008	Instrument panel needle gauges
AC009	Instrument panel warning lights
AC010	Lighting
AC011	Symbol display
AC015	Voice synthesiser
VP002	Enter VIN
VP006	Oil change frequency in km
VP007	Oil change frequency in months
VP008	Distance to next oil service: current value in km
VP009	Time to next oil service: current value in months
VP010	Mileometer updating
VP011	Fuel tank sender unit calibration

GETtheMANUALS.org

CLEARING

RZ001: Fault memory
This command is used for clearing the computer's stored faults.

ACTIVATION

AC003: Opening element indicator light
This command enables the opening element indicator lights to be tested.

Switch on the ignition and run command **AC003**.
The buzzer should be heard.

AC004: Seatbelt warning light
This command enables the seat belt warning light to be tested.

Switch on the ignition and run command **AC004**.
The buzzer should be heard.

AC005: Display test
This command enables the entire display assembly to be tested.

Switch on the ignition and run command **AC005**.
All the display elements on the instrument panel should light up.

AC006: Audible warning (Buzzer)
This command is for testing the buzzer function.

Switch on the ignition and run command **AC006**.
The buzzer should be heard.

AC008: Instrument panel needles
This command enables the needles to be tested (rev counter, speedometer, oil and coolant temperature).

Switch on the ignition and run command **AC008**.
The buzzer should be heard.

AC009: Instrument panel indicator/ warning lights
This command enables the all the instrument panel warning lights to be tested.

The warning lights come on and then go out:
– make sure that lighting of one warning light does not cause the lighting, even partially, of another warning light.
The indicator lights are all lit:
– make that sure the lighting is correct.

GETtheMANUALS.org

ACTUATION (continued)

AC010: Lighting
This command enables the instrument panel lighting to be tested.

Switch on the ignition and run command **AC010**.
The instrument panel lights up; change the lighting brightness.

AC011: Symbol display
This command enables the matrix display to be tested.

Switch on the ignition and run command **AC011**.
All the matrix display pixels should be red.

AC015: Voice synthesiser
This command enables the voice synthesiser to be tested.

Switch on the ignition and run command **AC015**.
A voice synthesis message should be heard.

GETtheMANUALS.org

NOTES	**Only consult the customer complaints after a complete check using the diagnostic tool.** **Run fault finding on the multiplex network.** **Run fault finding on the instrument panel.** **In the case of a top of the range instrument panel (with central display), run fault finding on the function.**

ONE OR MORE OF THE NEEDLES DOES/DO NOT MOVE	**ALP 1**
ONE OR MORE OF THE NEEDLES DOES/DO NOT MOVE IN ACCORDANCE WITH THE SCALE DIVISIONS	**ALP 1**
THE DISPLAY ON THE TRIP COMPUTER OR CENTRAL DISPLAY IS INCOMPLETE OR BLURRED	**ALP 1**
SOME OF THE TRIP COMPUTER DATA IS INCORRECT	**ALP 1**
SOME OF THE TRIP COMPUTER DATA HAS BEEN REPLACED WITH DASHES	**ALP 1**
THE FUEL SENDER (APART FROM LPG) DISPLAYS AN IMPLAUSIBLE VALUE	**ALP 1**
THE OIL GAUGE DISPLAYS AN INCORRECT READING	**ALP 1**
THE TRIP COMPUTER DOES NOT WORK WHEN THE BUTTON IS PRESSED	**ALP 2**
THE WARNING LIGHTS DO NOT COME ON OR MESSAGES ARE NOT DISPLAYED WHEN THERE IS A FAULT	**ALP 3**
THE WARNING LIGHTS COME ON WHEN THERE IS NO FAULT	**ALP 3**
THE VOICE SYNTHESISER DOES NOT WORK	**ALP 4**
THE RADIO DOES NOT CUT OUT WHEN THE VOICE SYNTHESISER IS DELIVERING A MESSAGE	**ALP 5**
THE VOICE MESSAGES CANNOT BE UNDERSTOOD (DIFFERENT LANGUAGE, ETC.)	**ALP 6**

GETtheMANUALS.org

MESSAGES ARE ISSUED WHEN THEY SHOULD NOT BE	ALP 7
THE INSTRUMENT PANEL BACKLIGHTING DOES NOT WORK	ALP 8
THE INSTRUMENT PANEL DOES NOT LIGHT UP WHEN THE SIDE LIGHTS ARE ON	ALP 8
INSTRUMENT PANEL SELF-TEST PROCEDURE	PRO 1

GETtheMANUALS.org

ALP 1	**One or more of the needles does/do not move** **One or more of the needles does/do not move in accordance with the scale divisions** **The display on the on trip computer or central display is incomplete or blurred** **Some of the trip computer data is incorrect** **Some of the trip computer data has been replaced with dashes** **The fuel gauge (apart from LPG) displays an implausible value** **The oil gauge displays an incorrect measurement**

NOTES	None.

Run the instrument panel self-test procedure (**PRO 1**).

AFTER REPAIR	If an instrument panel has been replaced: Remember to run a self-test and clear the faults. Remember to configure the instrument panel.

GETtheMANUALS.org

ALP 2	The trip computer does not work when the button is pressed

NOTES	Carry out a fault finding procedure on the multiplex network (see **88B Multiplex network**). Switch on the ignition.

Run the instrument panel self-test procedure (**PRO 1**).
Check the **insulation and continuity** of the connection between: Instrument panel, **15-track connector, track 6** ⟶ **track B7** of the windscreen wiper stalk Repair if necessary.
Check the **earth** on **track B5** of the wiper stalk connector.
Check that the voltage on **track 6** is zero when the button is pressed. If necessary, repair the wiring or replace the windscreen wiper control.
Replace the instrument panel.

AFTER REPAIR	If an instrument panel has been replaced: Remember to run a self-test and clear the faults. Remember to configure the instrument panel.

GETtheMANUALS.org

ALP 3	**The warning lights do not come on or messages are not displayed when there is a fault** **The warning lights come on although there is no fault**

NOTES	Carry out a fault finding procedure on the multiplex network (see **88B Multiplex network**). Carry out a fault finding procedure on the system that controls the warning light / message. Switch on the ignition.

List of warning/indicator lights lit up by a wire connection and not via the multiplex network:
- brake fluid fault,
- dipped headlights on,
- main beam headlights on,
- front fog lights on,
- rear fog lights on,
- direction indicators,
- heated seat indicator light,
- immobiliser warning light,
- parking brake,
- driver's seat belt.

If these warning/indicator lights do not come on or come on when they should not:
- check the continuity of the wiring between the warning/indicator light control (sensor, lighting stalk, alternator, etc.) and the instrument panel,
- check that the control system is working properly, that there is a feed to it and that there are no short-circuits on the connection.

The UCH detects if there is a bulb failure and transmits the bulb status on the multiplex network.

Replace the instrument panel.

AFTER REPAIR	If an instrument panel has been replaced: Remember to run a self-test and clear the faults. Remember to configure the instrument panel.

GETtheMANUALS.org

ALP 4	Voice synthesiser does not work

NOTES	Switch on the ignition. Press the repeat button, check if a message is issued. Carry out a fault finding procedure on the multiplex network, in particular check that the network linking the instrument panel to the voice synthesiser is correct). Carry out fault finding on the instrument panel. Check the (language) configurations. Check that the presses on the repeat and mute buttons have been detected.

Check the feed (+ battery feed, earth and + ignition feed) to the instrument panel and the voice synthesiser.
If the radio does not mute, check the multiplex network. Switch off the ignition, disconnect and reconnect the battery. Switch the ignition back on so that the instrument panel is reconfigured correctly.
Check the **continuity and insulation** of the following connections: Voice synthesiser **track 14** ⟶ **track A1** of the speaker Voice synthesiser **track 15** ⟶ **track A2** of the speaker Check the speaker. Repair if necessary.
Replace the voice synthesiser computer. If the fault persists, replace the instrument panel.

AFTER REPAIR	If an instrument panel has been replaced: Remember to run a self-test and clear the faults. Remember to configure the instrument panel.

GETtheMANUALS.org

ALP 5	**The radio does not cut out when the voice synthesiser is issuing a message**

NOTES	Check that the radio is working correctly. Switch on the ignition.

Check **the continuity and insulation** of the following connection:
Voice synthesiser **track 10** ⟶ **Track 3, black connector** for the radio
Repair if necessary.

Disconnect the voice synthesiser.
Connect **track 10** of the connector to earth.
If the radio mutes, replace the voice synthesiser; if not, replace the radio.

AFTER REPAIR	If an instrument panel has been replaced: Remember to run a self-test and clear the faults. Remember to configure the instrument panel.

GETtheMANUALS.org

ALP 6	The voice synthesiser messages are inconsistent (different language...)

NOTES	Carry out a fault finding procedure on the multiplex network (see **88B Multiplex network**). Carry out fault finding on the instrument panel. Carry out a fault finding procedure on the systems that the messages refer to. Switch on the ignition.

Replace the voice synthesiser computer.
If the fault is still present, replace the instrument panel.

AFTER REPAIR	If an instrument panel has been replaced: Remember to run a self-test and clear the faults. Remember to configure the instrument panel.

GETtheMANUALS.org

ALP 7	Messages are issued when they should not be

NOTES	Carry out a fault finding procedure on the multiplex network (see **88B Multiplex network**). Carry out a fault finding procedure on the system that the message refers to.

Replace the instrument panel.
If the fault is still present, replace the voice synthesiser.

AFTER REPAIR	If an instrument panel has been replaced: Remember to run a self-test and clear the faults. Remember to configure the instrument panel.

GETtheMANUALS.org

ALP 8	**The lighting dimmer on the instrument panel does not work** **The panel does not light up when the side lights are on**

NOTES	Switch on the ignition. Switch on the side lights. Carry out a fault finding procedure on the instrument panel (check that the side lights are active).

Check that the voltage on **track 27 of the 30-track** instrument panel connector is **12 V** when the side lights are switched.

Check **the continuity and insulation** of the connections between:

Instrument panel, **15-track connector, track 5** ⟶ **track 2** of the dimmer

Dimmer **track 3** ⟶ Earth

Repair if necessary.

Check that the resistance of the dimmer varies between **0** and **1000 Ω** when the wheel is moved.
If not, check that the climate control varies and refer to the fault finding procedure for the climate control (see **62B, Regulated air conditioning**).

AFTER REPAIR	If an instrument panel has been replaced: Remember to run a self-test and clear the faults. Remember to configure the instrument panel.

GETtheMANUALS.org

PRO 1	Instrument panel self-test procedure

NOTES	There must be no present or stored faults. The warning lights run by the instrument panel should be lit. Press the button of the trip computer (trip computer scroll button on the windscreen wiper stalk). Holding the button down, switch on the ignition (card inserted into the reader up to the stop). As soon as the needles begin to move, the test mode runs for **5 minutes**. Release the button. To skip from one screen to another on the trip computer, briefly press the trip computer scroll button again. Press the km reset button to exit from the mode and **clear the faults**.

Check that the rev counter, speedometer, coolant temperature gauge and fuel level gauge needles are moving properly and following all the scale divisions. If not, replace the instrument panel.
Check that all the digits on the trip computer are lit up. If not, replace the instrument panel.
Each time the Trip computer scroll button is pressed, the image on the central display changes. Replace the instrument panel if some images are unclear.

AFTER REPAIR	If an instrument panel has been replaced: Remember to run a self-test and clear the faults. Remember to configure the instrument panel.

GETtheMANUALS.org

VEL SATIS

8 Electrical equipment

86A RADIO

General information	86A - 1
Security code recovery procedure	86A - 7
Protection code	86A - 8
Replacement of components	86A - 11
Configuration - Settings	86A - 12
Connections	86A - 13
Self-test procedure	86A - 14
Radio fault finding: Customer complaints	86A - 15
Fault finding chart	86A - 16
Recovering a jammed CD	86A - 30

BJ0E - BJ0J - BJ0K - BJ0M - BJ0P - BJ0V

77 11 311 302 **FEBRUARY 2006** **EDITION ANGLAISE**

"The repair procedures given by the manufacturer in this document are based on the technical specifications current when it was prepared.

The methods may be modified as a result of changes introduced by the manufacturer in the production of the various component units and accessories from which his vehicles are constructed."

All rights reserved by Renault s.a.s.

Copying or translating, in part or in full, of this document or use of the service part reference numbering system is forbidden without the prior written authority of Renault s.a.s.

© Renault s.a.s. 2006

GETtheMANUALS.org

The tuner-amplifier has a test menu (see radio self-test procedure) to carry out repair operations or fault finding.

The radio will operate for approximately 20 minutes without the ignition being switched to the accessories position. The radio beeps then switches off.

Diagram:

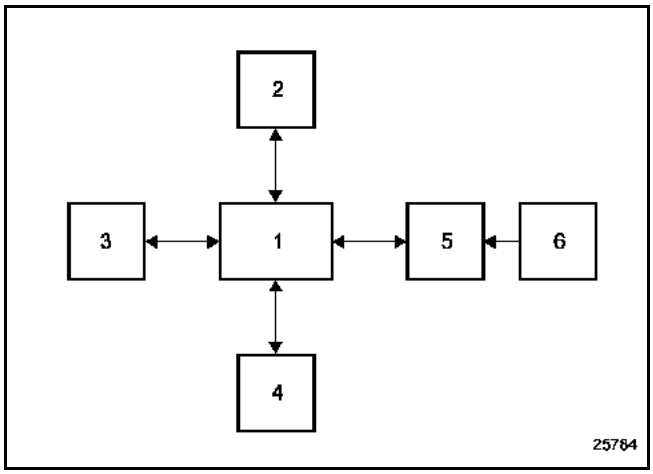

1 Radio
2 Aerial
3 CD changer
4 Speakers/tweeter speakers
5 Display
6 Steering wheel control

GETtheMANUALS.org

Special features of radios in the PN range:
PN0: radio with integrated display.
PN1: radio with remote display.
PN2: radio and cassette player with integrated display.
PN3: radio and cassette player with remote display.
PN4: radio and CD player with integrated display.
PN5: radio and CD player with remote display.

Notes:
- All radios are designed to control a CD changer.
- There is a special procedure for replacing the CD changer located in the dashboard front panel.
- According to the vehicle version, the remote displays may have a 24 or 30-track connector or two 15-track connectors. This display may be integrated into the instrument panel.

GETtheMANUALS.org

The radio features allow you to:
– listen to the radio (four geographical zones can be programmed for FM radio)
– display the name of the station using RDS which automatically switches to the best transmitter (AF function),
– receive traffic news (**I Traffic** function),
– receive news flashes and emergency bulletins (**I News** function).
– receive public safety emergency bulletins (**PTY 31**).

RADIO FUNCTION

The tuner has three selection modes displayed on the screen and accessible from the radio front panel:
– manual mode (MANU),
– preset mode (PRESET),
– alphabetical mode (LIST).

CASSETTE FUNCTION

The cassette plays automatically once cassette mode has been selected using the steering wheel control or the front panel.

Only the Dolby fast-forward and rewind with search controls can be selected by specific buttons.

Note:
The "Mute" function accessed via the voice synthesiser or the steering wheel control stops the cassette playing.

CD FUNCTION

The CD player can play conventional discs and any audio tracks on a CD-ROM.

CDs can be played in order or at random.

If a CD changer is being used, random play is possible on only one of the possible 6 compact discs.

THERMAL PROTECTION

If the radio temperature is too high for it to function properly, the volume is automatically reduced (without changing the volume shown in the display).

Should one of the speaker tracks short circuit, the supply to the amplifier will be cut off.

GETtheMANUALS.org

VOLUME CONTROL

The volume can be increased according to the vehicle speed. To operate this function:
select the desired volume adjustment curve by using the **expert** mode (press and hold the **source** button until a bleep is heard): **SPEED 5** for maximum increase, **0** to cancel the increase.

GETtheMANUALS.org

FAULT FINDING LOG

System: Radio

List of monitored parts: ***Radio system***

Administrative identification

Date	2 0
Log completed by/tel.	
Dealership details	
VIN	Mileage
Repair Order	Engine

System configurations

Radio	Renault part number:	
	series number	FAULT FINDING LOG
CD changer	Renault part number:	
	series number	FAULT FINDING LOG
Display	Renault part number:	
	series number	FAULT FINDING LOG

Customer complaint

	1165	Faulty control on radio front panel		1166	Sound fault on a speaker		1167	Faulty control on steering wheel
	1168	Screen display fault (**give details**)		1169	Reception fault (FM, LW, MW)		999	The radio does not switch on
	999	Fault with adjusting the volume according to speed		999	The radio does not switch off		999	The code is always requested when the radio is switched on
	999	Some of the radio's buttons do not work		999	Cassette playing fault (**give details**)		999	CD-ROM read fault (**give details**)
	999	The CD changer does not switch on		999	CD changer has no sound			

Description of customer complaint:

Customer complaint reproduced:	YES ❑	NO ❑
Are there any retrofitted accessories on the vehicle?	YES ❑	NO ❑
If yes, which:		

Conditions under which the customer complaint occurs

	999	Permanent fault		999	Intermittent frequency (when fault occurs)		999	Low temperatures
	999	Very high temperatures		999	Ambient heat		999	Engine running or warm
	011	When the ignition is switched on		999	When starting		005	While driving
	009	Sudden fault						

Others

Comments:

RENAULT

FD 99
Fault finding log

GETtheMANUALS.org

FAULT FINDING LOG

System: Radio

- **Documentation used in fault finding**

Fault finding procedure used	
Type of fault finding manual:	Workshop Repair Manual ❑ Technical Note ❑ Assisted fault finding ❑
Fault finding manual number	
Wiring diagram used	
Wiring Diagrams Technical Note Number:	
Other documentation	
Title and/or part number:	

- **Workshop fault finding**

- **Conditions under which fault disappears**

- **Parts returned**

Parts:	Radio ❑	CD changer ❑	Speakers ❑	Screen ❑

Note:
Complete and send off a fault finding log for each component that is removed and returned.

RENAULT

GETtheMANUALS.org

Recovering a security pre-code is carried out by removing the **TUNER-AMPLIFIER** and noting down the four characters that follow the letter T on the barcode. Below are two photos of barcodes displayed on the radios:

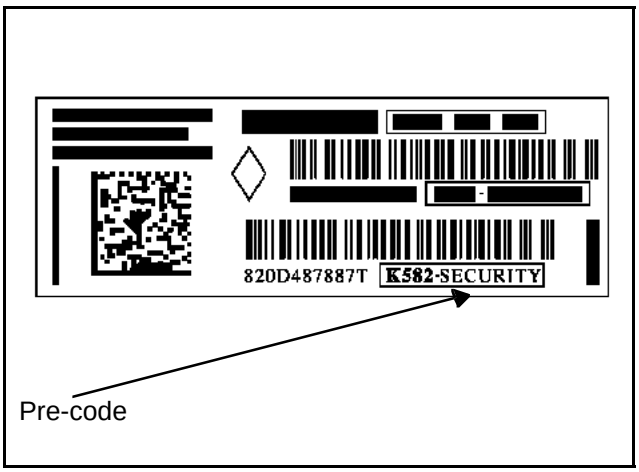

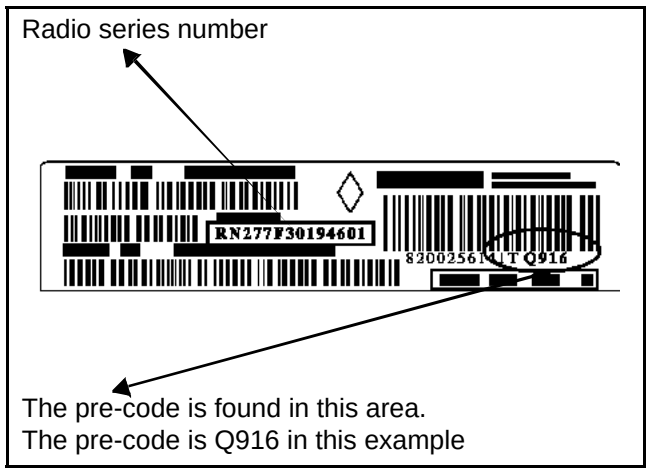

THE VIN MUST BE ENTERED IN ALL 4 SOLUTIONS

4 solutions to recover the radio code:

1 **Only the VIN is available**: connect to code management on Renault Net and enter the number. The code server gives the original radio code entered in the World Vehicle Database (BVM).

If the code has not been entered in the World Vehicle Database or is incorrect when the code is entered in the radio, then follow the procedure below:

2 **The pre-code is available**: go back into code management on Renault.Net, enter the pre-code (see photos) then obtain the radio code. **For radios in the NR range, the pre-code is obtained in the self-test procedure mode by pressing buttons 1, 6 and i**.

3 For older vehicles which do not have a radio pre-code, enter the series number of the radio again. For example, for Philips radio, this code starts with RN. In the photo of the radio, this code is RN277F30194601.

If this code is correct, the radio operates again; if it does not operate, follow the procedure below:

4 Write a help message to be sent to the assistance unit.

IF A NEW CODE IS CREATED, THE VIN IS UNKNOWN; SEND A HELP MESSAGE TO RENAULT NET CODE MANAGEMENT TO UPDATE THE DATABASE.

GETtheMANUALS.org

The radio is protected by a four digit code. This code must be entered via the control satellite or the radio keypad each time the battery is disconnected.

Entering the code with the control on the steering wheel:
Press the bottom button on the control to confirm an entry.

Entry via the radio:
Enter the digits using buttons 1, 2, 3 and 4, and then confirm with button 6.

If the code is entered incorrectly, the radio will be locked
(1 minute for the first error, 2 minutes for the second error,
4 minutes for the third error, etc. 32 minutes maximum).

Some configurations must be set after the code has been entered for the first time (see the **Configuration** Section). These settings are stored when the battery is disconnected.

Reminder:
The radio will operate for approximately 2 minutes in scrambled mode without the code having been entered (with regular warning beeps).

If the vehicle is equipped with a CD changer in the front panel, a code is exchanged between the CD changer and the radio.
– If a new CD changer is fitted, the radio code is programmed when the battery or CD changer is connected.
– If the radio is replaced, enter the security code of the old radio connected to the CD changer. The CD changer is programmed with the code for the new radio.
– If the old radio code is lost, the changer code can be cleared using the clearing code. The clearing code is issued by the Techline, server etc.

Note:
If there is a configuration error, you can return to scrambled mode by pressing the 2 and 5 buttons at the same time as switching the power on. Then wait 2 minutes.

Note:
The CD changer is supplied uncoded. When it is installed in the vehicle, the CD changer is programmed with the radio supply code.

Reminder:
The radio will operate for approximately 2 minutes in scrambled mode without the code having been entered (with regular warning beeps).

IMPORTANT
If the vehicle is fitted with a top of the range navigation system (ITS), enter the radio code in the following way:
1. switch on the system by activating the vehicle's + after ignition feed,
2. wait 2 minutes: scrambled mode with beeps from the speakers, then code request screen appears,
3. enter the radio code using the ITS keypad: move the cursor with the central control and press to confirm,
4. switch off the ignition.

GETtheMANUALS.org

THE DISPLAY SHOWS "CODE" OR "0000"

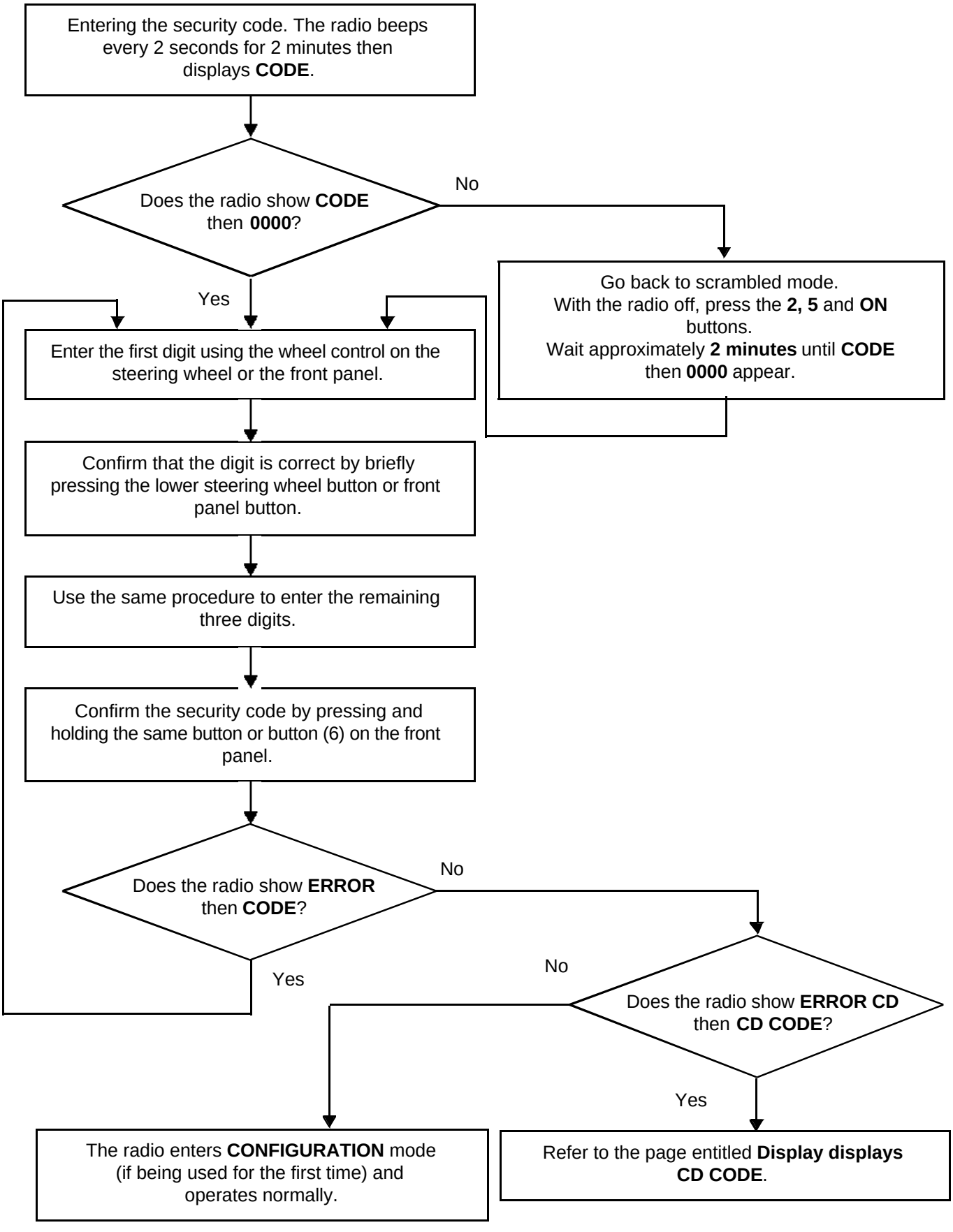

GETtheMANUALS.org

THE DISPLAY SHOWS "CD CODE"

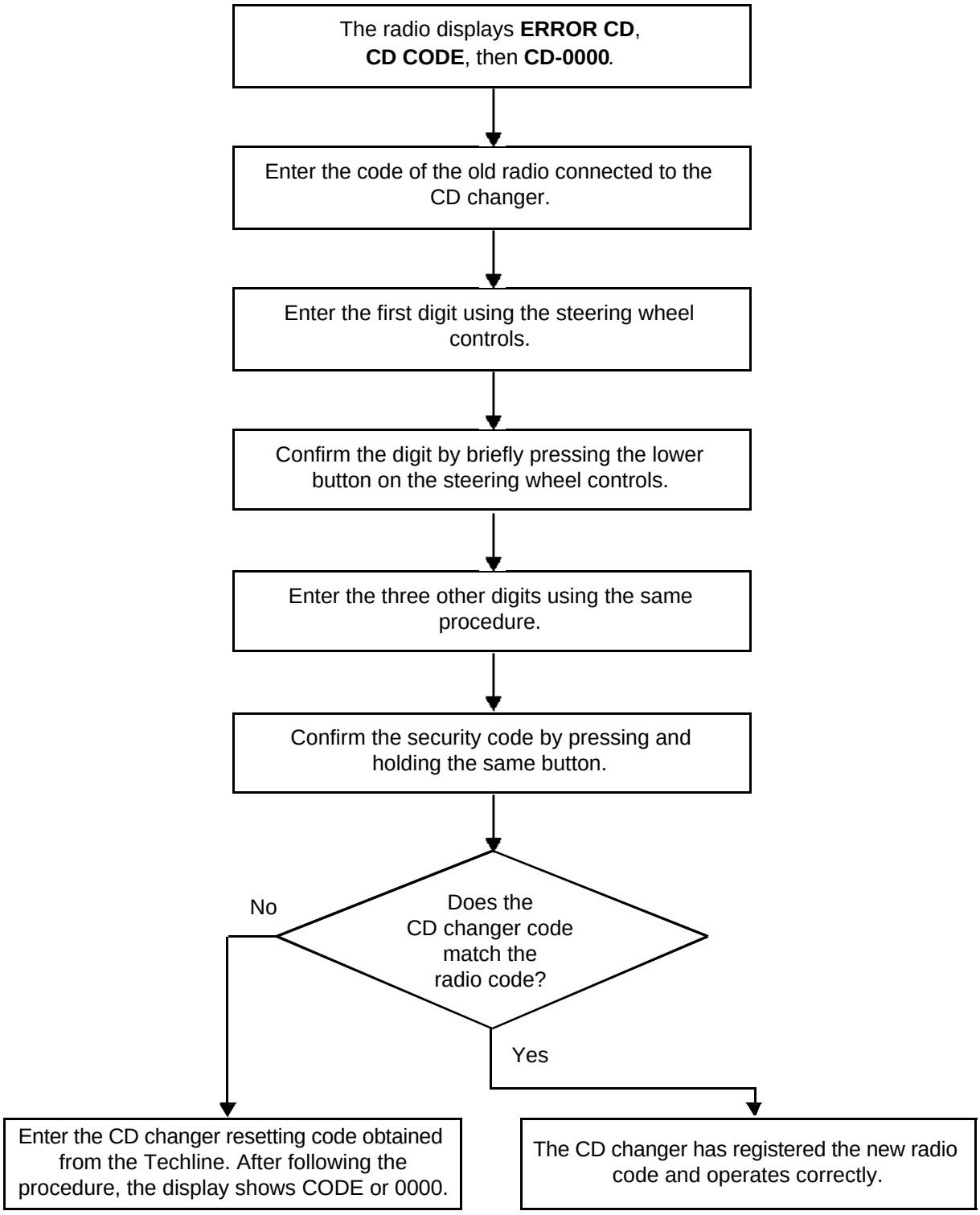

GETtheMANUALS.org

AFTER DISCONNECTING THE BATTERY OR REMOVING THE RADIO:

- **Enter the security code** (see **security code**).
- **Setting the time:**

  For displays not equipped with time setting buttons, proceed as follows:
  - Press and hold the satellite time setting button (left-hand button): the hour flashes and can be set with the +/- buttons.
  - Briefly press the satellite time setting button (left-hand button): the minutes flash and can be set with the +/- buttons.
  - Briefly press the satellite time setting button (left-hand button): exit time setting.

  For displays equipped with time setting buttons, proceed as follows:
  - Briefly press the right-hand display button to select hours then use the left-hand button to select the desired hour. Press the right-hand button to confirm. Use this procedure to set the minutes.

After a component has been replaced, reconfigure and set the parameters for the radio (see **Configuration - Settings**), enter the security code (see **security code**).

GETtheMANUALS.org

CONFIGURATIONS

NOTE:
To select the zone in which the Tuner is to be used, press buttons **2** and **5**, at the same time as the equipment is switched on. Then wait for approximately 2 minutes. Enter the four digit code then:

- select the tone curve appropriate for the vehicle
  - 0: no regulation
  - 1: Twingo
  - 2: Clio
  - 3: Mégane/Scénic
  - 4: Laguna
  - 5: Vel Satis - Espace

- select the relevant zone:
  - **America**
  - **Japan**
  - **Asia**
  - **Arabia**
  - **Others** (Europe, Africa, other)

Note:
These configurations are not required when the secret code is entered after the power supply has been cut.

SETTINGS

To enter configuration mode (**Expert** mode), press and hold the **source** button (four seconds) until you hear a bleep. This allows you to adjust the following functions:

NR range:
- AF mode activation (automatic retuning),
- vehicle speed-dependent volume control (5 for maximum regulation, 0 to cancel regulation),
- **Loudness** mode activation.

PN range:
- AF mode activation (automatic retuning),
- vehicle speed-dependent volume control (5 for maximum regulation, 0 to cancel regulation),
- **Loudness** mode activation,
- **Assisted tuner** mode activation,
- configuration of the number of **speakers** (2 or 4),
- manual or dynamic list selection.

PN6 radio:
- AF mode activation (automatic retuning),
- vehicle speed-dependent volume control (5 for maximum regulation, 0 to cancel regulation),
- **Loudness** mode activation,
- **Assisted tuner** mode activation,
- configuration of the number of **speakers** (2 or 4),
- manual or dynamic list selection.
- activation of data storage in accordance with the Renault Card: **CARD ON/OFF**. To operate, the radio must be accompanied by the navigation system.

GETtheMANUALS.org

To allocate the tracks for the different functions that are connected to the radio (CD changer, steering wheel control, display, aerial), refer to the Wiring Diagrams Technical Note corresponding to the vehicle.

Radio: see Wiring diagrams Technical Note, vehicle, code **261**

CD changer: see Wiring diagrams Technical Note, vehicle, code **1272**

Display: see Wiring diagrams Technical Note, vehicle, code **1127**
For displays which are connected to the instrument panel, the code is **247**

Steering wheel control: see Wiring diagrams Technical Note, vehicle, code **325**

Aerial: see Wiring diagrams Technical Note, vehicle, code **886**

GETtheMANUALS.org

The self-test procedure mode of the previous generation radios (PN0-6) allows certain main functions to be tested:

- by pressing buttons 2 and 4 at the same time, the speakers can be tested. They are supplied one by one; the display enables the connections and signals from each speaker to be checked,
- by pressing buttons 1 and 6 at the same time, the reception level can be tested (after frequency is displayed),
  - 9 or letter: good reception,
  - less than 3: poor reception,
  - if 2: total loss of stereo.

The self-test procedure mode of the new generation radios (NR4/5) enables certain main functions to be tested using the combination of buttons 1, 6 and i. The messages will be displayed in the following way:

- **Radio pre-code displays one letter and three digits to avoid removal of the radio**,
- speaker test with two bleeps (bass - treble) from the speakers, with the tested speakers shown on the display (front left-hand H01, front right-hand H02, rear right-hand H03, rear left-hand H04),
- displays the frequencies and levels of the radio sensors,
- software version displayed, displays fault finding for the connected aerial if the aerial is supplied by a coaxial cable; in this case, the display shows H15 with X = 0, 1 or 2 depending on the aerial status (0: open circuit, 1: short circuit to earth, 2: power consumption),
- audio test loudness OFF (H08), cuts any loudness for an audio test.

Note:
Also displays source use time and total time in 10 minute slots (Tuner (H09)/CD (H10)/cassette (H11)/CD changer (H12)/auxiliary (13)/MP (H14)/Total (H15)).

GETtheMANUALS.org

THE RADIO BEEPS APPROXIMATELY EVERY 2 SECONDS	ALP 1
THE RADIO DOES NOT WORK (NO SOUND) WHEN THE RADIO ON BUTTON IS PRESSED	ALP 2
THE RADIO DOES NOT SWITCH ON AUTOMATICALLY WHEN "+ ACCESSORIES FEED" IS SWITCHED ON OR SWITCHES OFF AFTER 20 MINUTES	ALP 3
THE RADIO IS SWITCHED ON, BUT THE DISPLAY AND SATELLITE CONTROLS DO NOT WORK	ALP 4
THE SATELLITE CONTROLS DO NOT WORK	ALP 5
RADIO RECEPTION FAULTS	ALP 6
THE VOLUME DOES NOT INCREASE WITH THE VEHICLE SPEED	ALP 7
LIGHTING DOES NOT CHANGE WHEN THE VEHICLE LIGHTS ARE SWITCHED ON	ALP 8
NO SOUND CUT-OUT DURING CARMINAT OR HANDS-FREE KIT MESSAGES	ALP 9
THE INFRARED REMOTE CONTROL DOES NOT WORK	ALP 10

GETtheMANUALS.org

ALP 1	The radio beeps approximately every 2 seconds

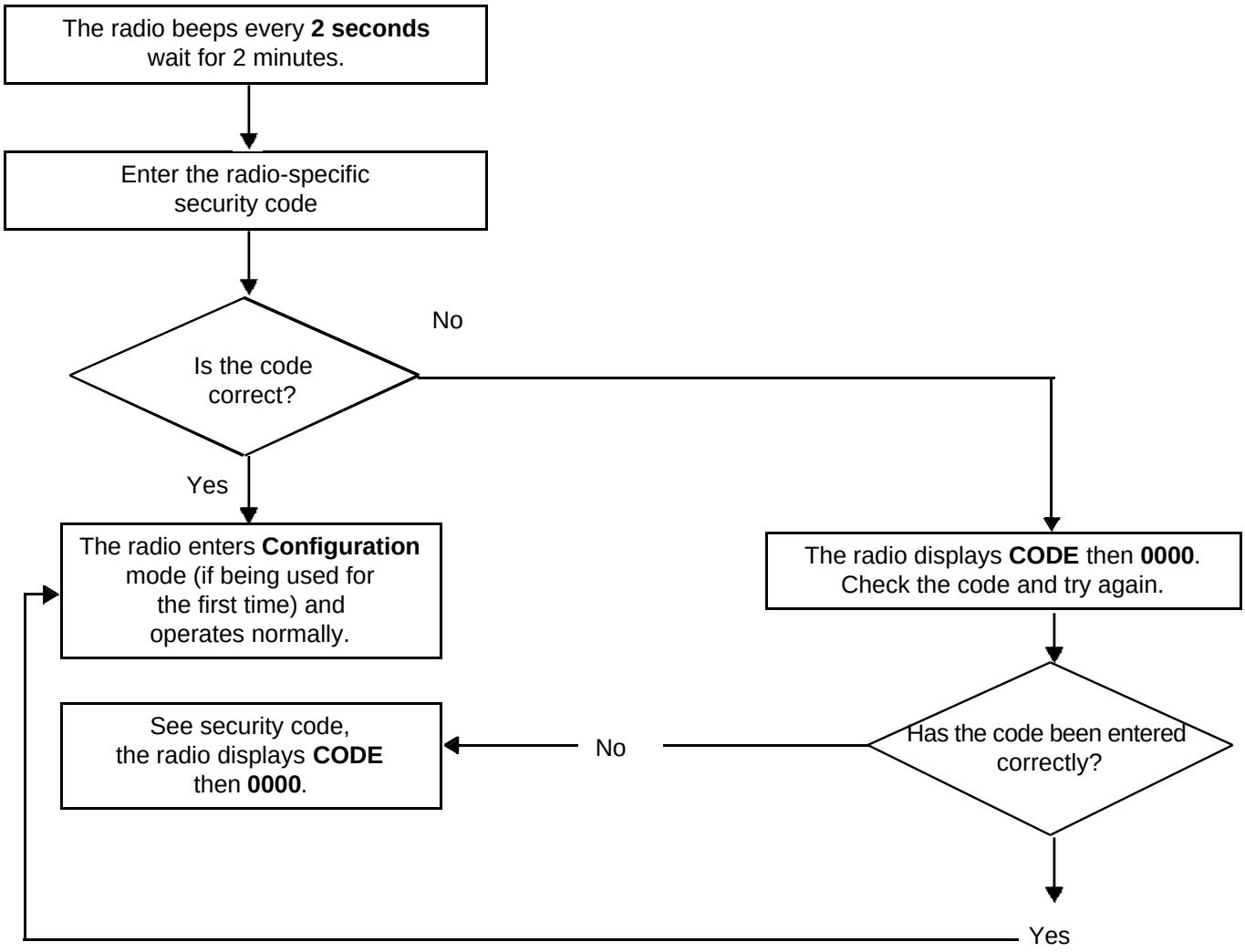

GETtheMANUALS.org

ALP 2	The radio does not operate when the ON button is pressed

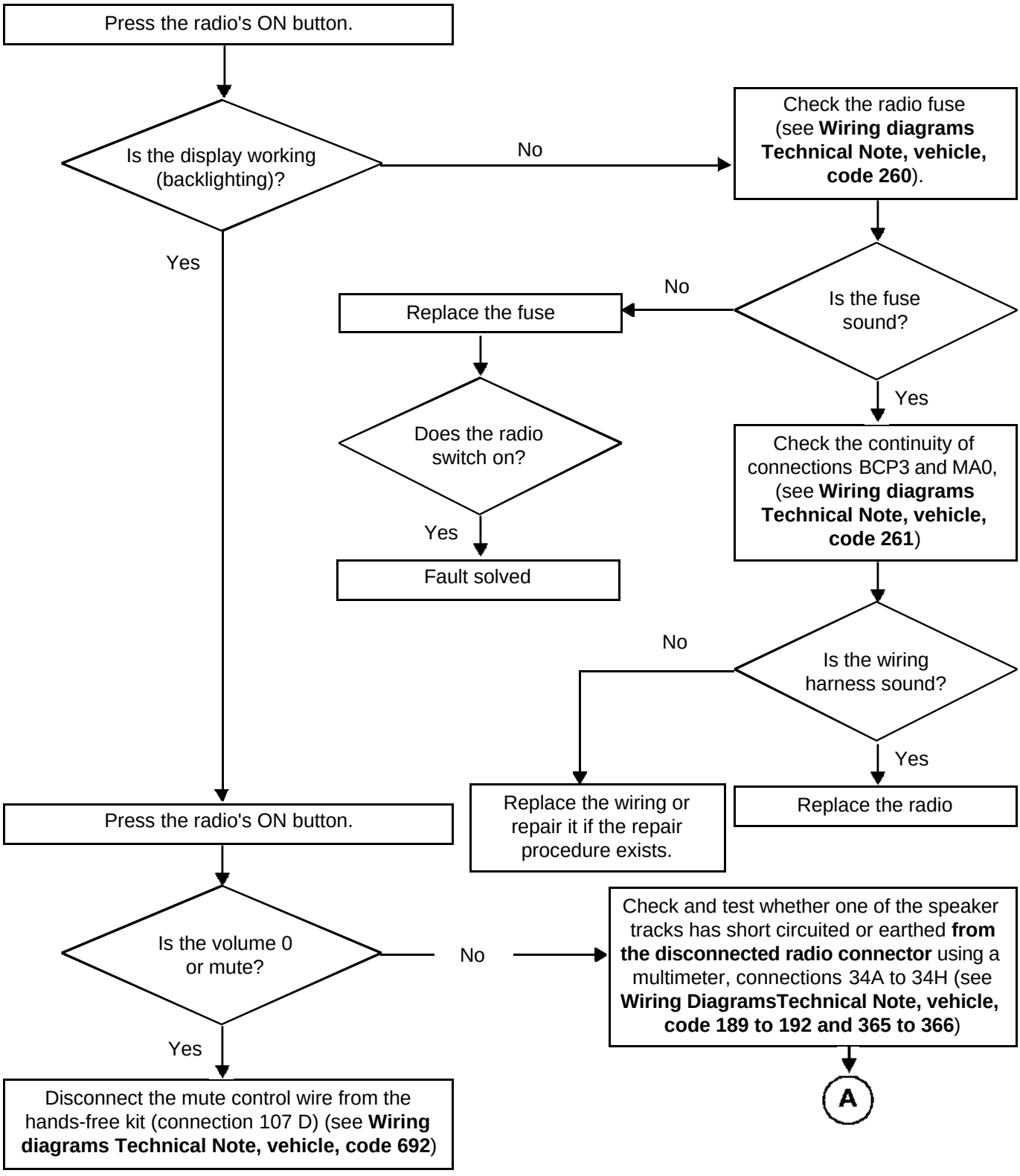

GETtheMANUALS.org

ALP 2 CONTINUED	

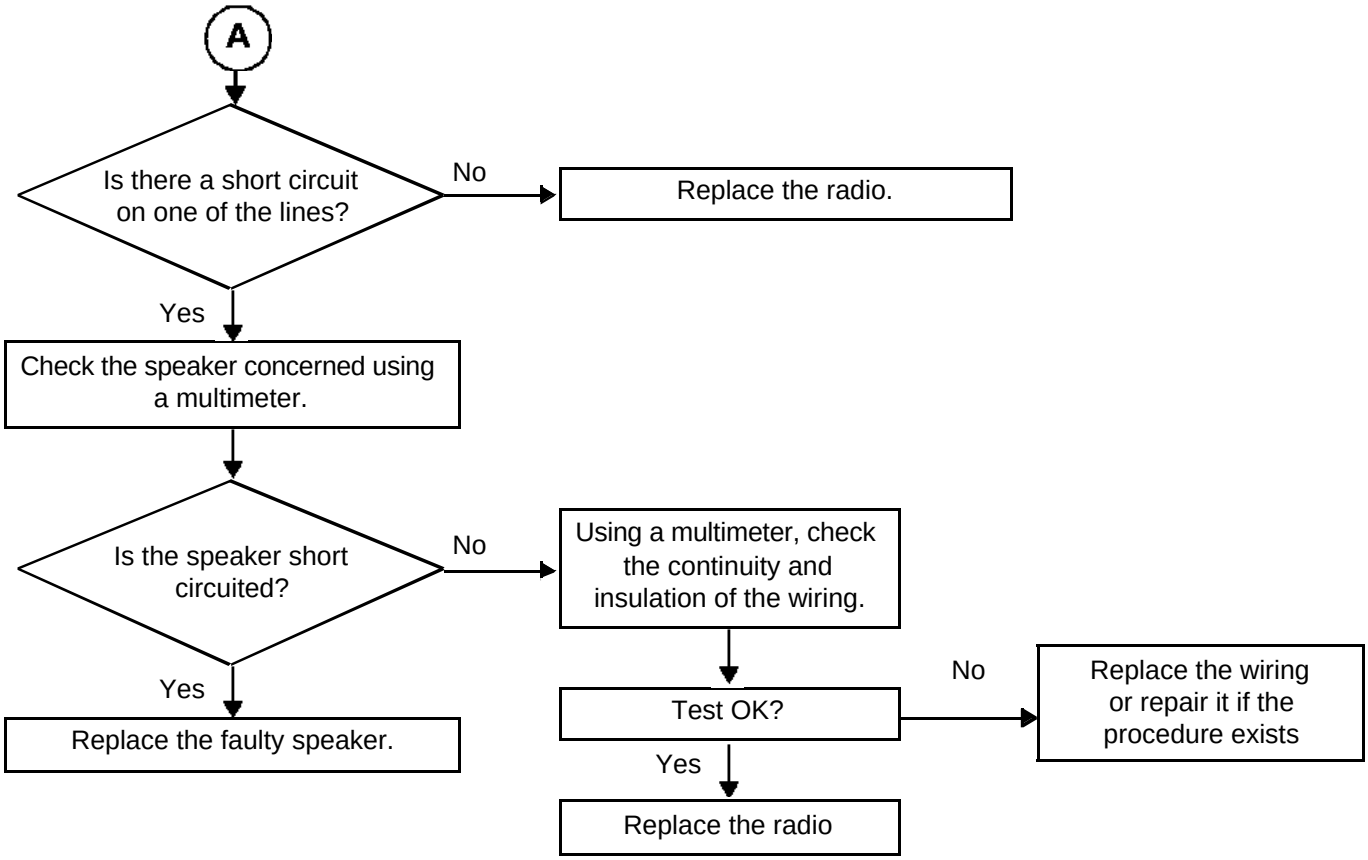

GETtheMANUALS.org

ALP 3	The radio does not switch on automatically or switches off after 20 minutes

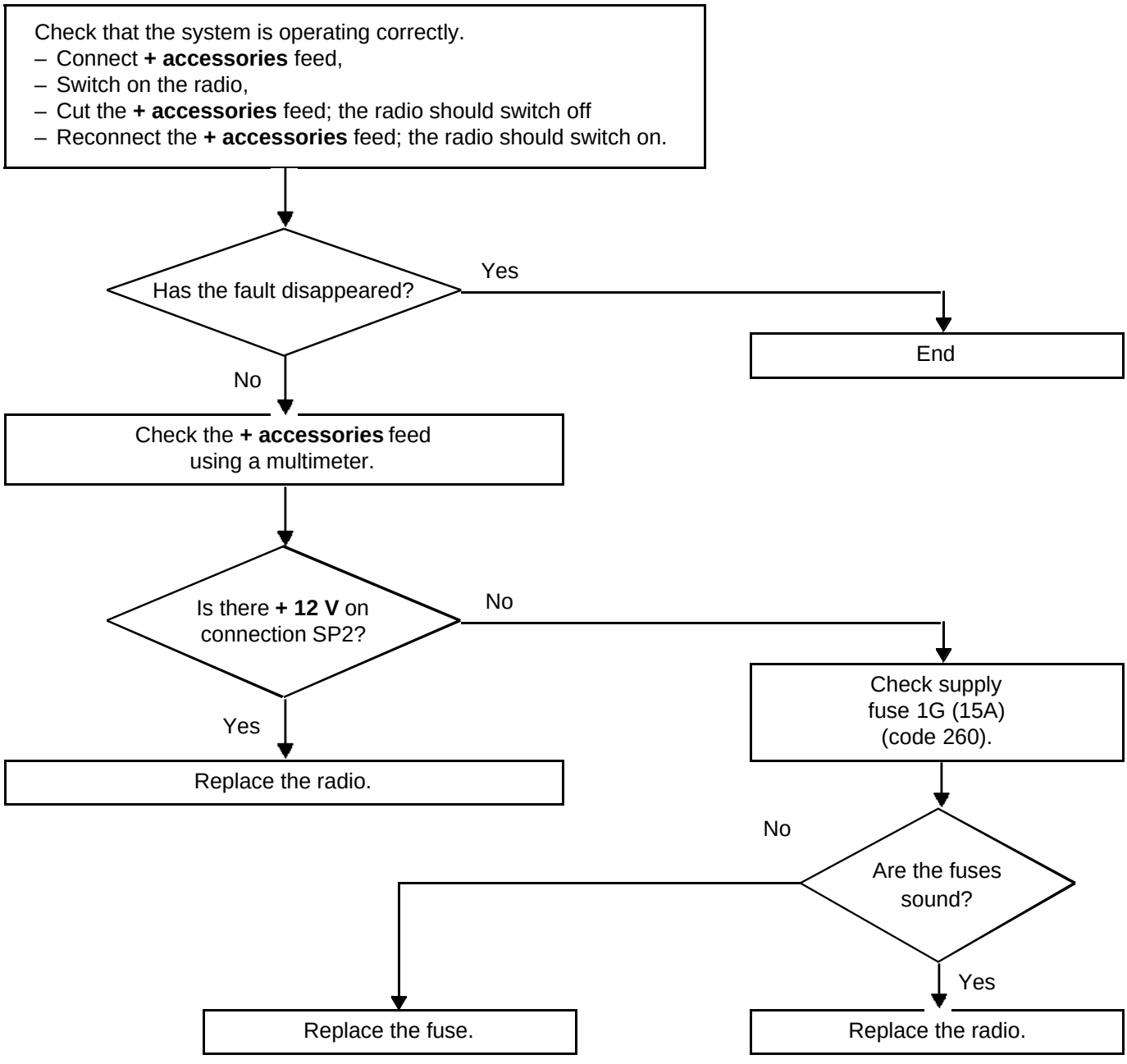

GETtheMANUALS.org

EXCEPT ESPACE IV, SCENIC II

ALP 4	The radio is switched on, but the display and control satellite do not operate

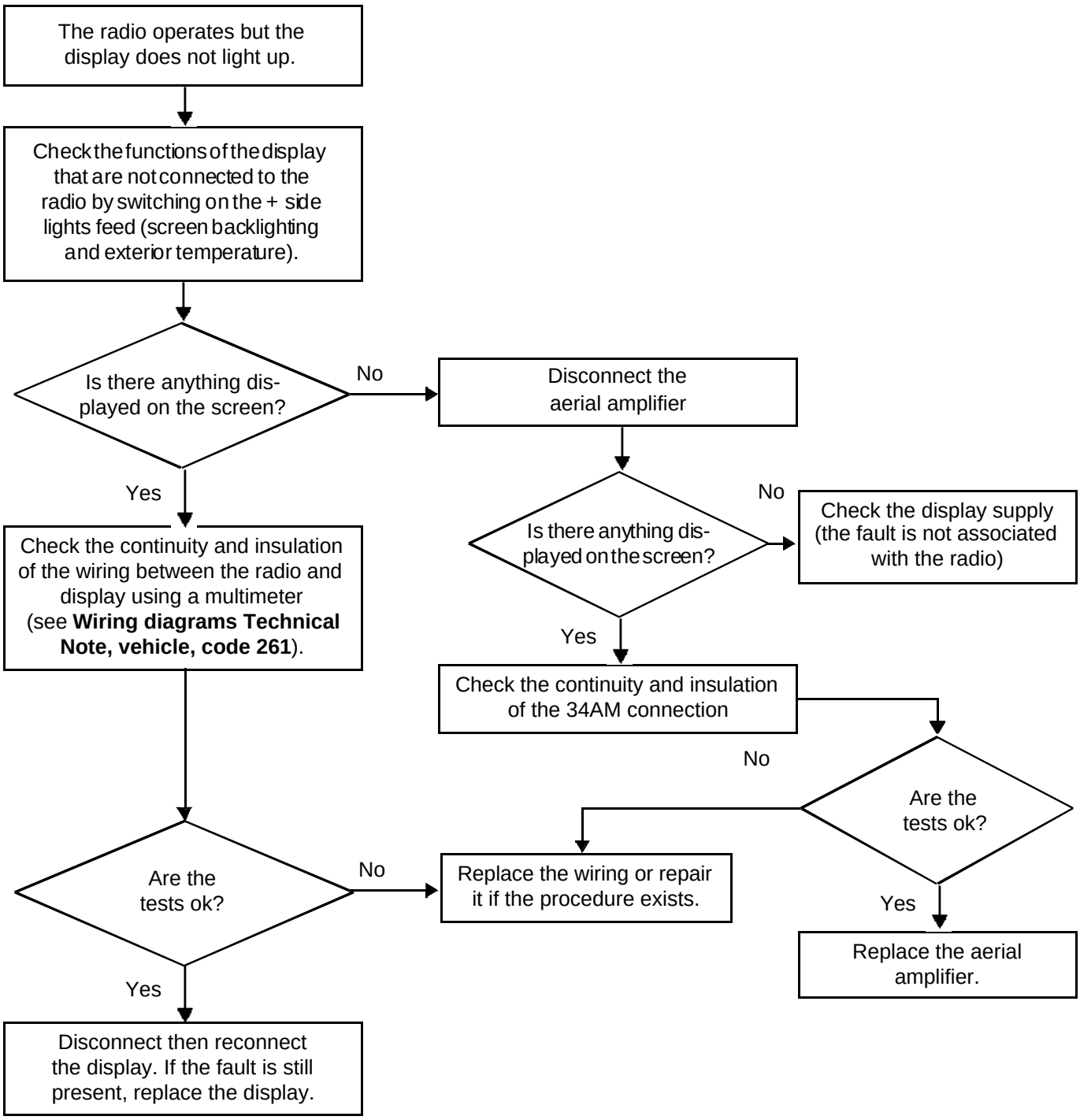

GETtheMANUALS.org

ESPACE IV, SCENIC II

ALP 4	The radio is switched on, but the display and control satellite do not operate

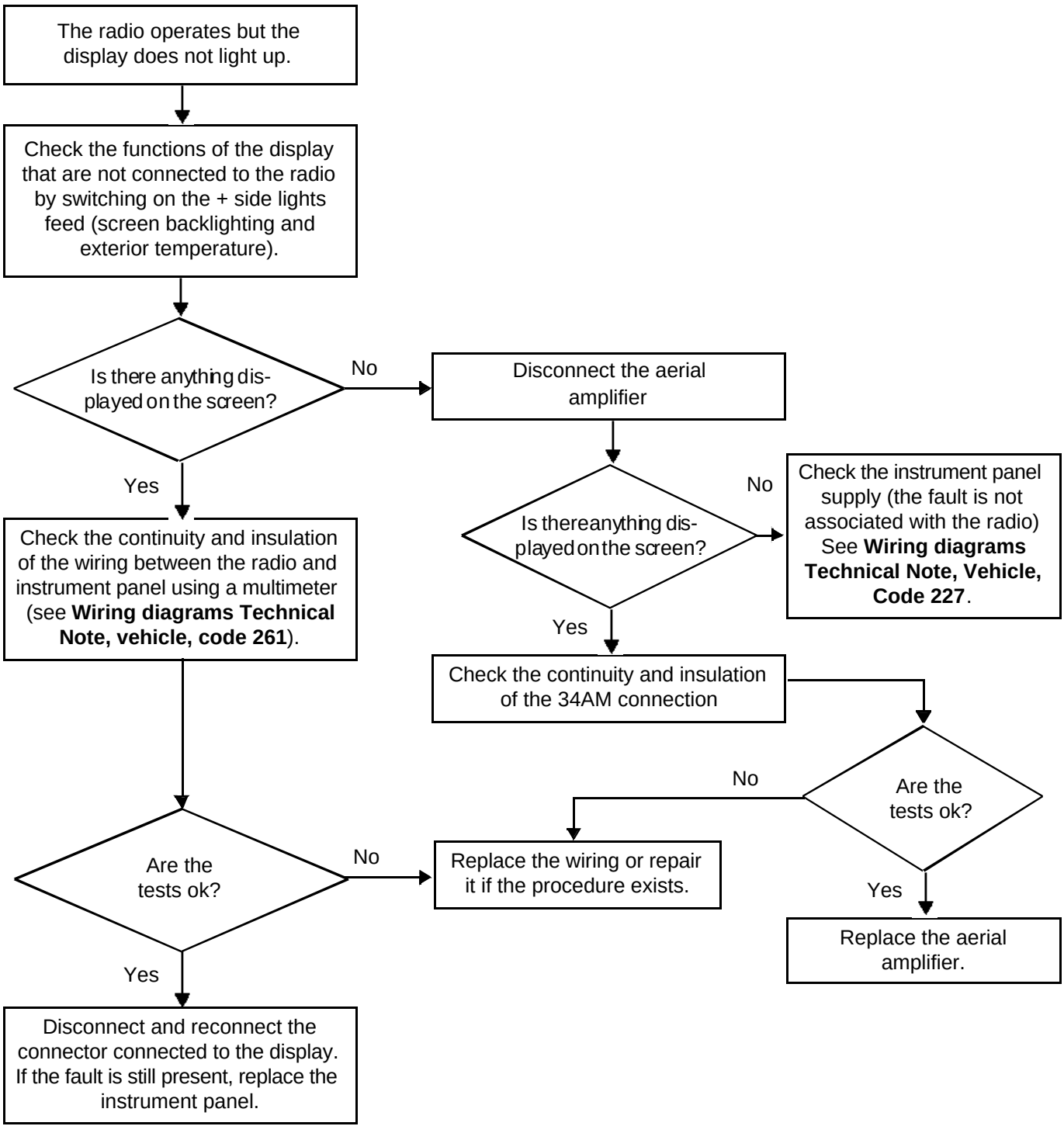

GETtheMANUALS.org

ALP 5	The radio control satellite does not operate

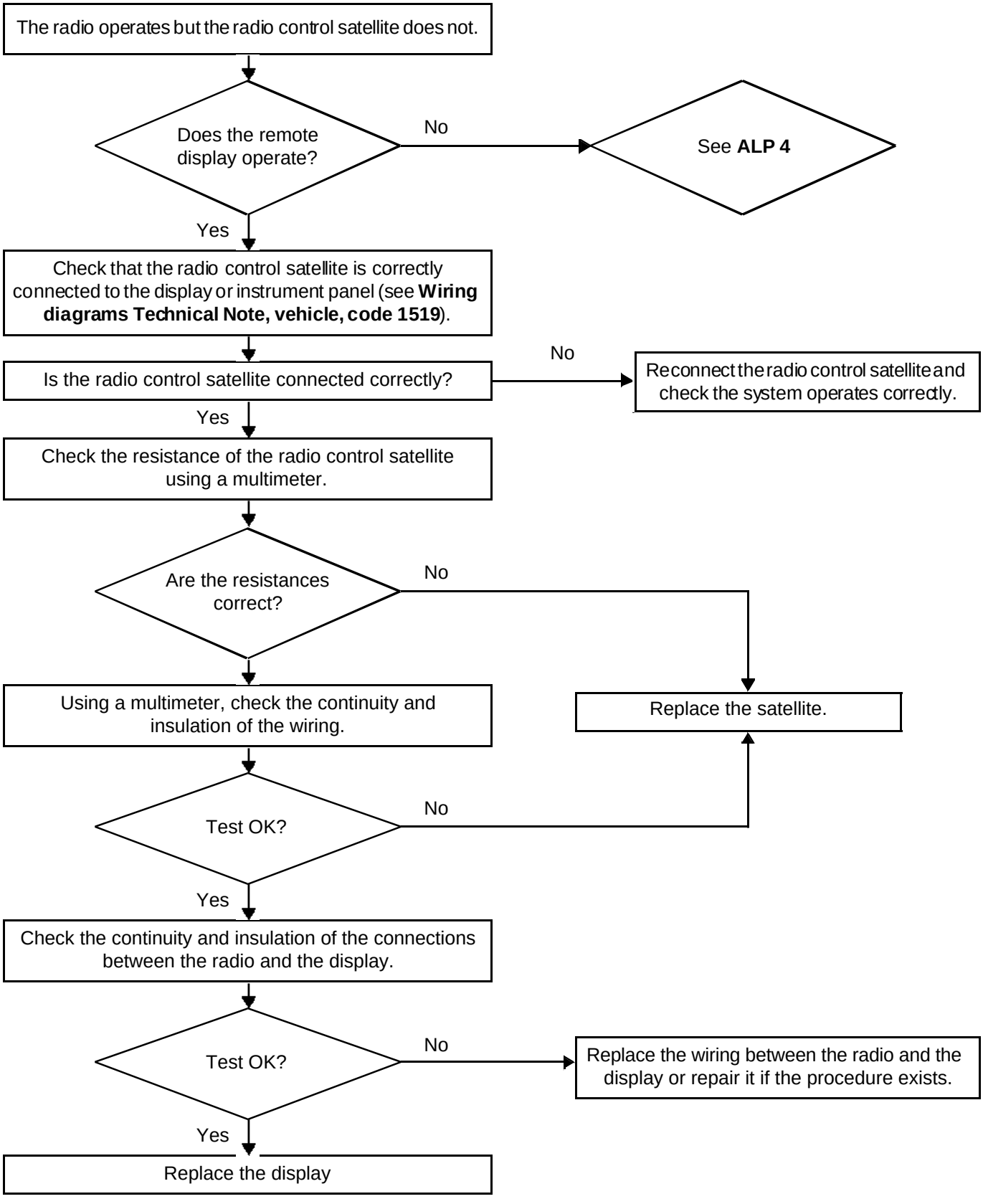

GETtheMANUALS.org

ALP 6	Radio reception faults

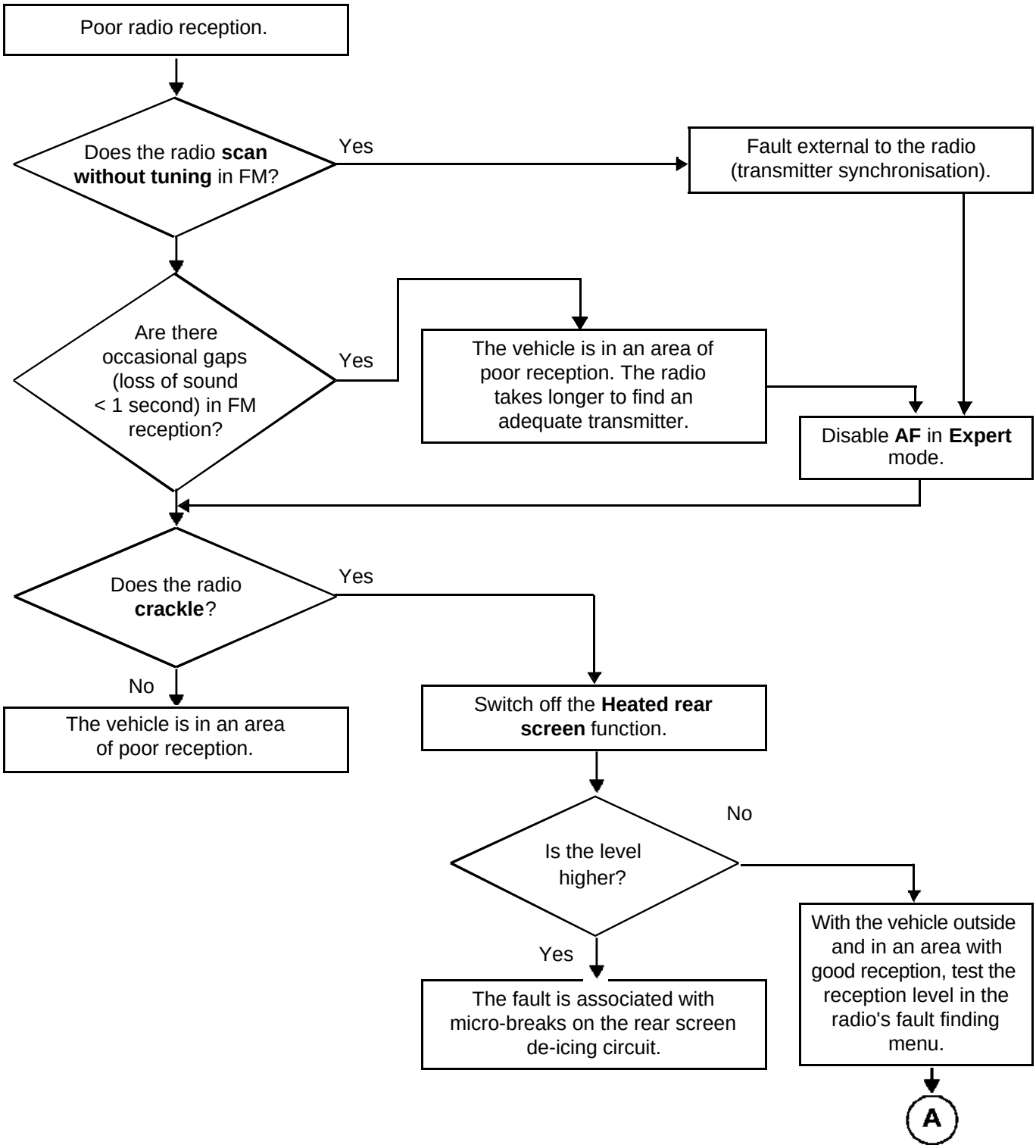

GETtheMANUALS.org

ALP 6 CONTINUED 1	

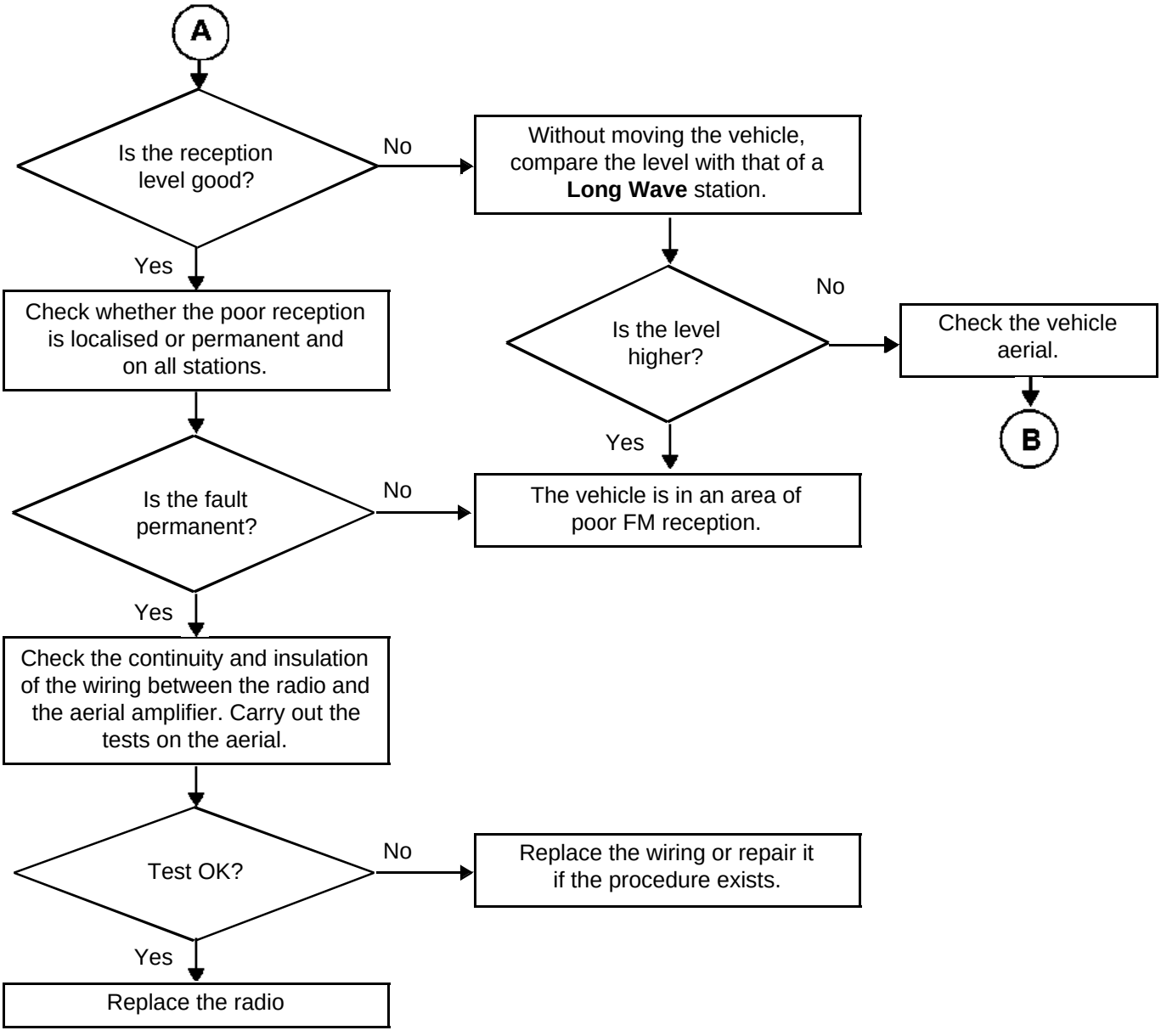

GETtheMANUALS.org

ALP 6 CONTINUED 2	

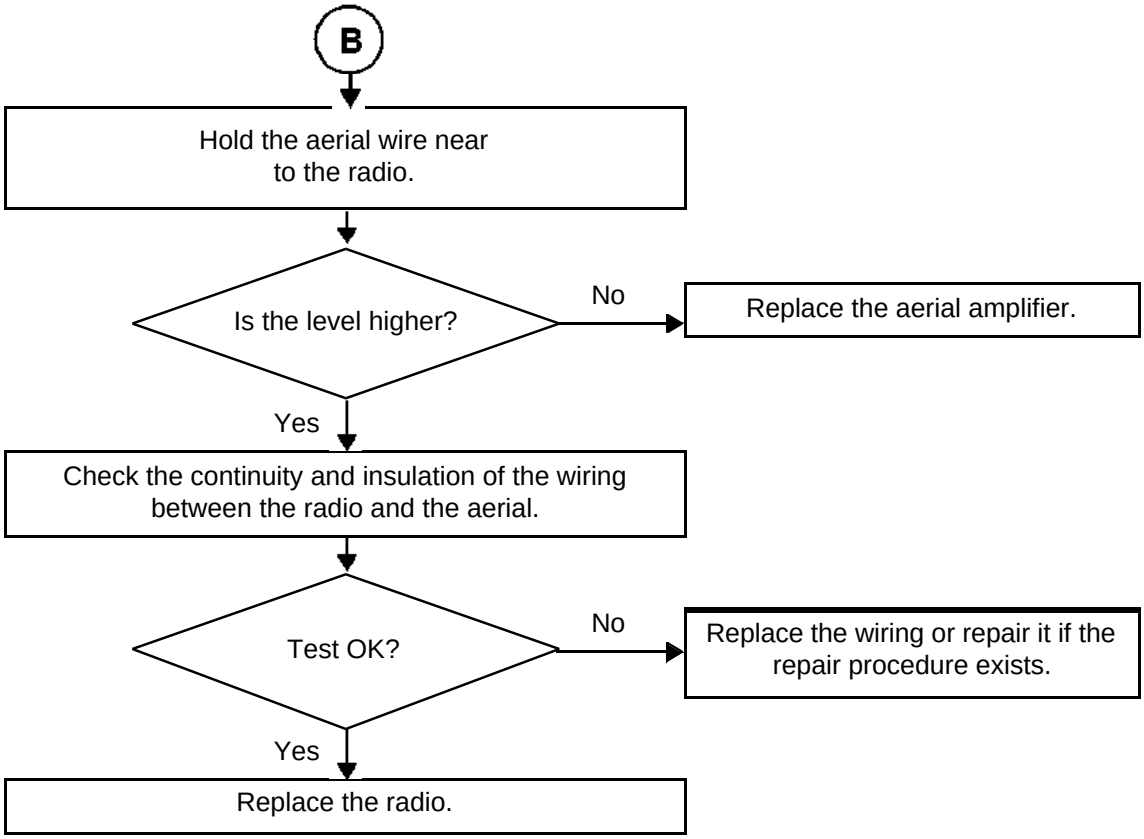

GETtheMANUALS.org

ALP 7	The volume does not increase with the vehicle speed

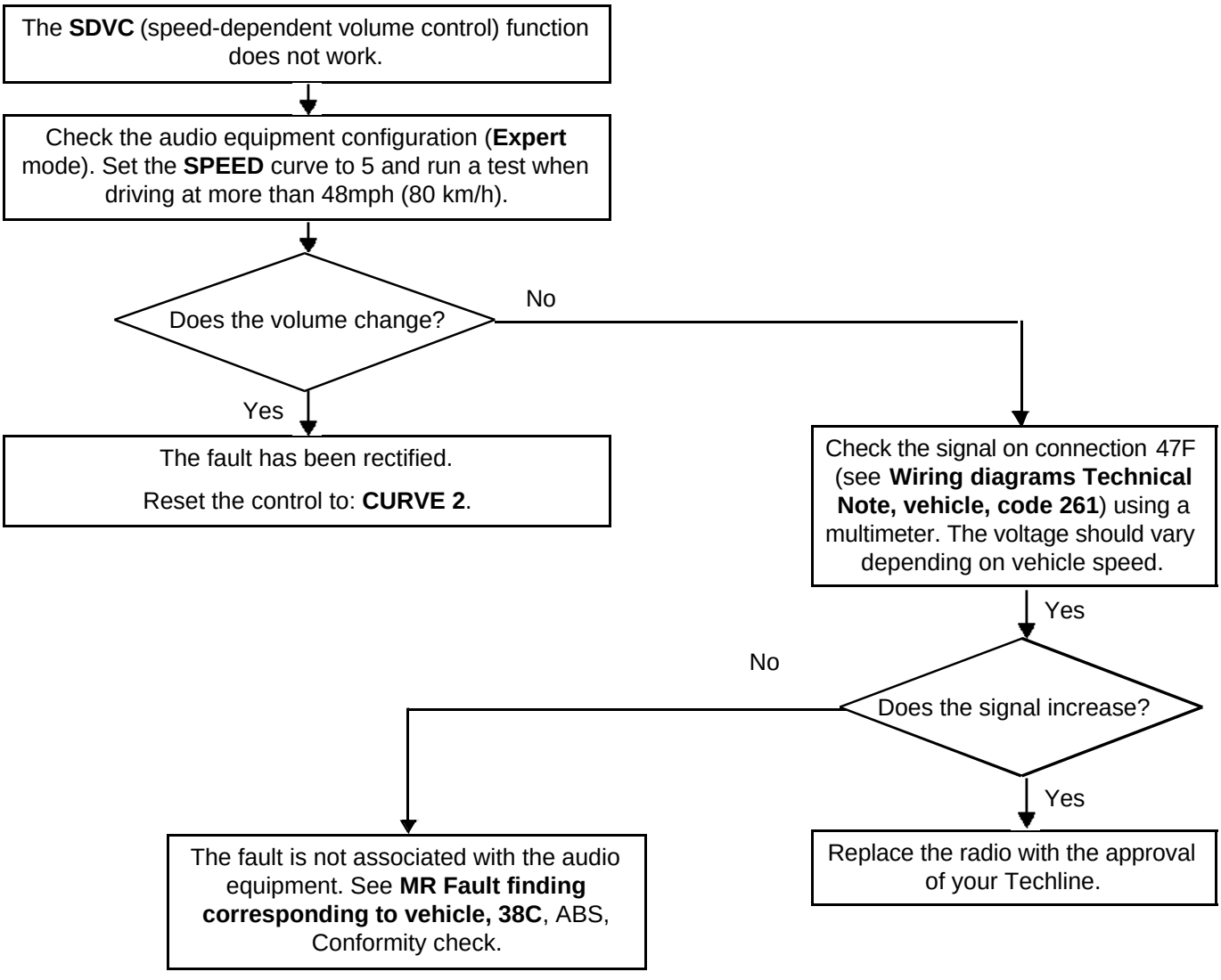

GETtheMANUALS.org

ALP 8	Lighting does not change when the vehicle lights are switched on

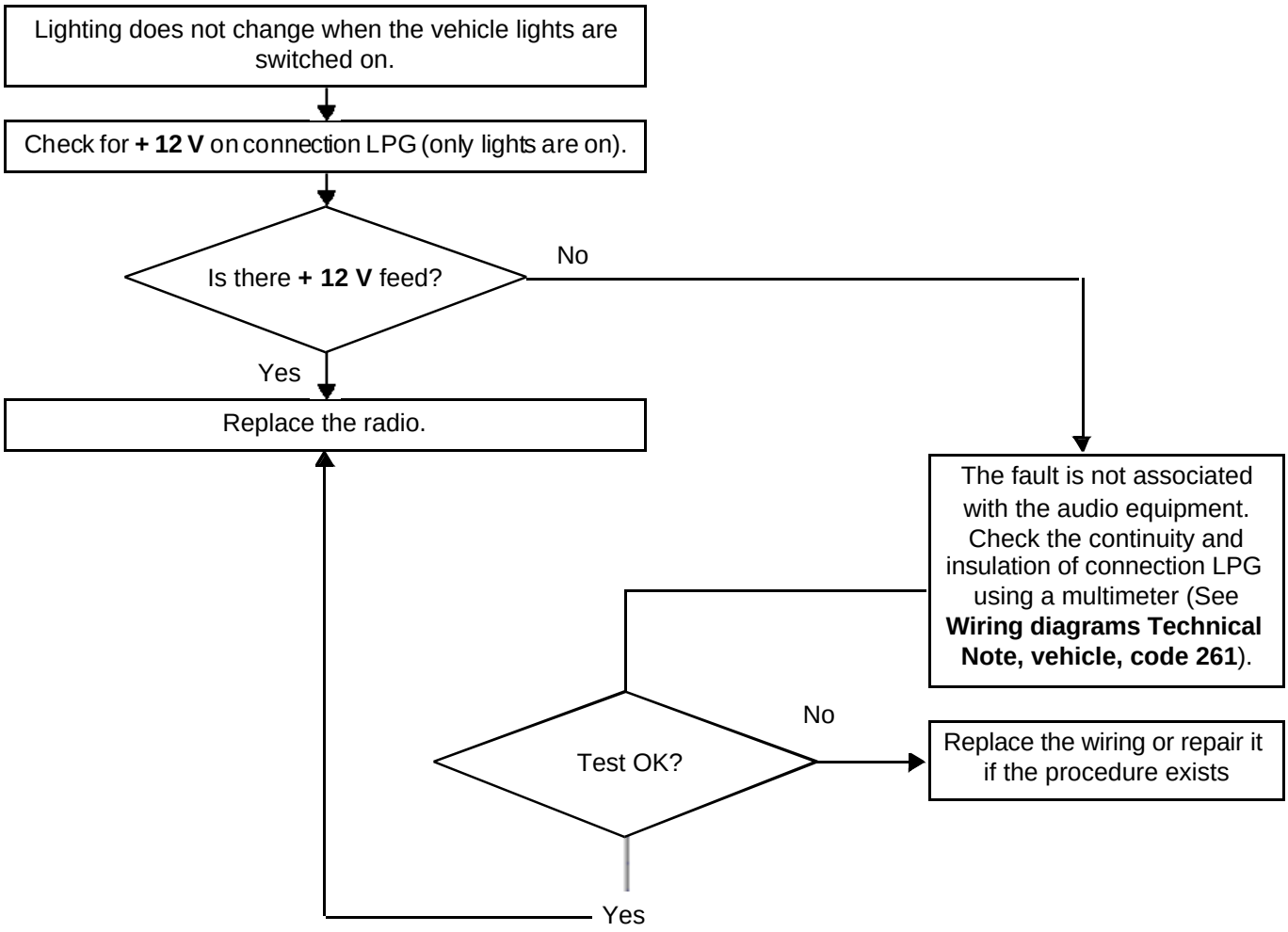

GETtheMANUALS.org

ALP 9	No sound muting during Carminat, voice synthesiser or hands-free kit messages

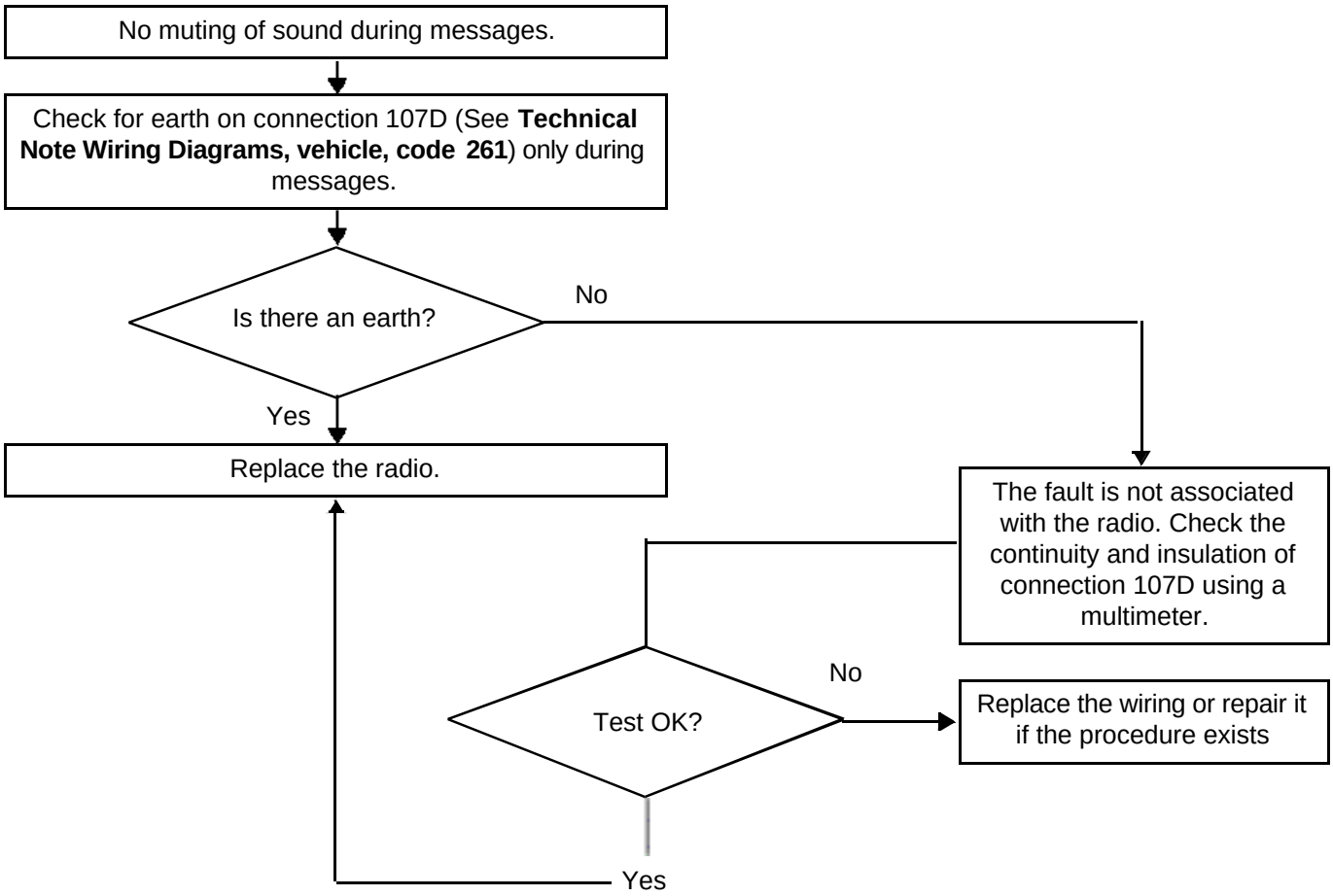

GETtheMANUALS.org

ALP 10	The infrared remote control does not operate (PN6)

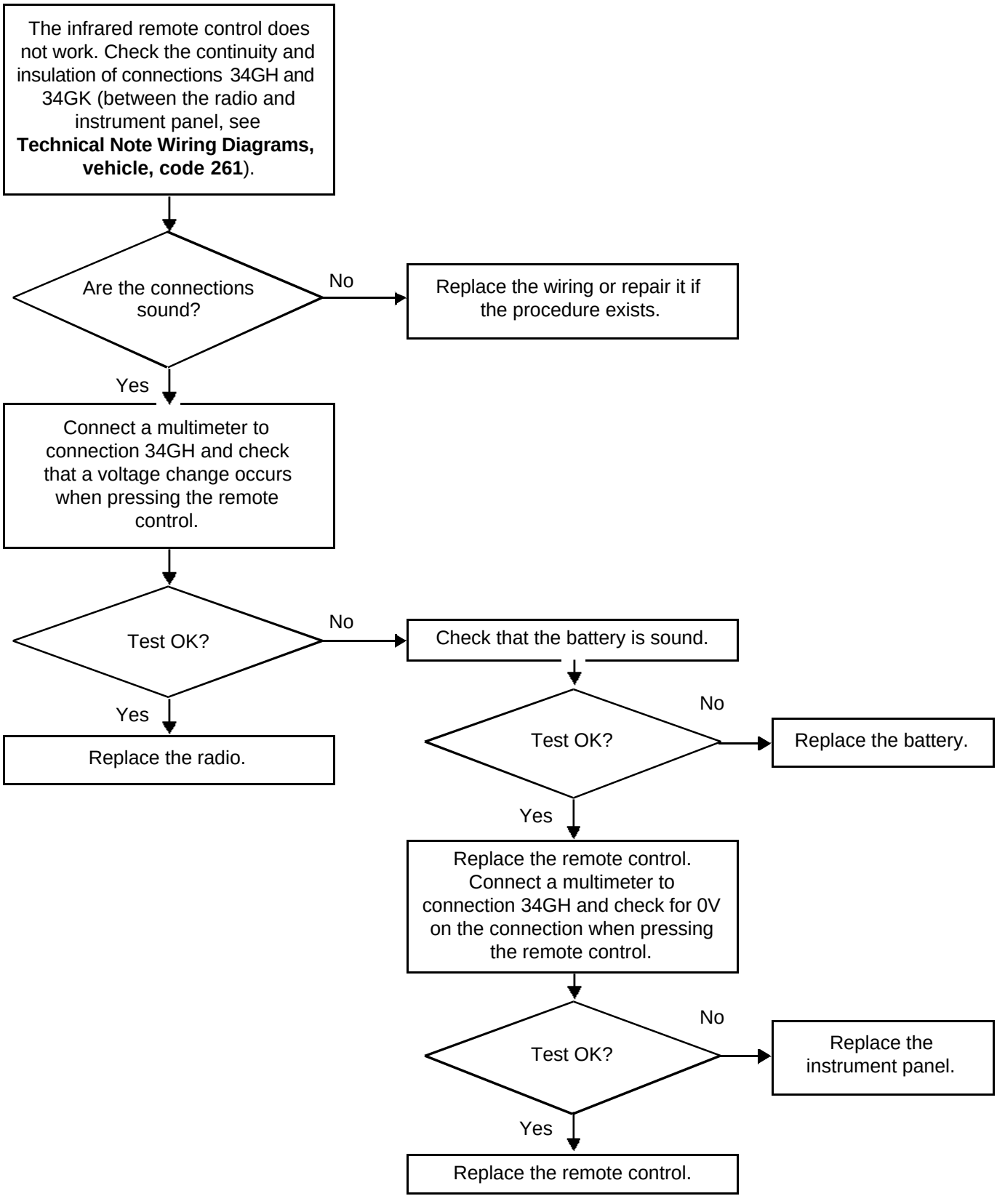

GETtheMANUALS.org

RADIO

First solution

If the electric ejector motor is operational, eject the CD using a **4.5 V** battery to supply the electric motor (**B**) (attach the + wire to contact (**1**) and the - wire to contact (**2**) when ejecting the CD).

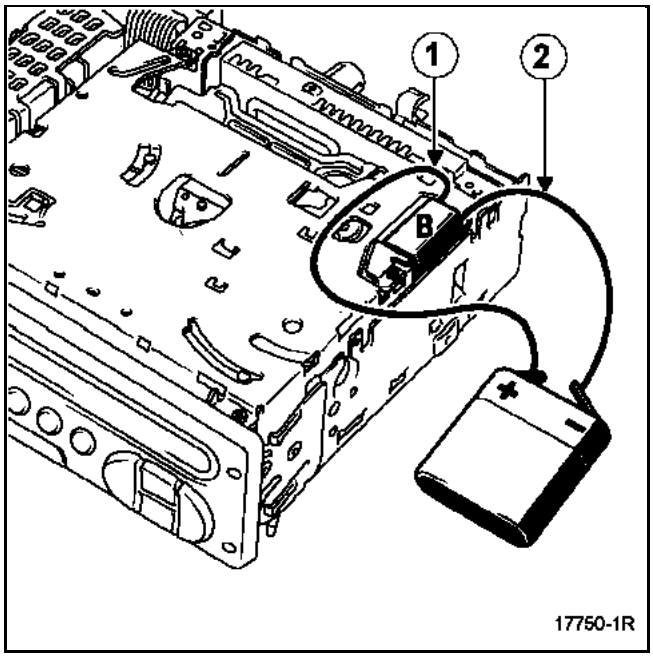

GETtheMANUALS.org

RADIO

Second solution

If the electric ejector motor is not operational, remove the screw (**C**) and release the electric motor (**B**).

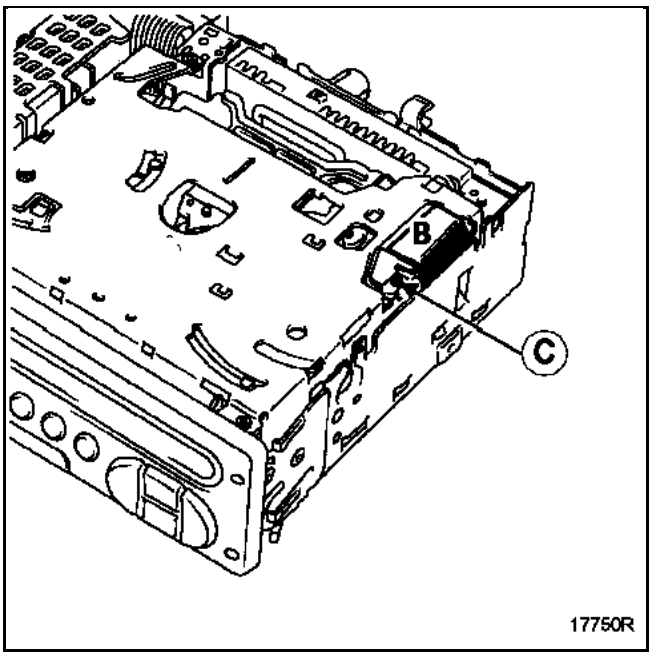

Turn toothed wheel (**D**) by hand in a clockwise direction until the CD is ejected.

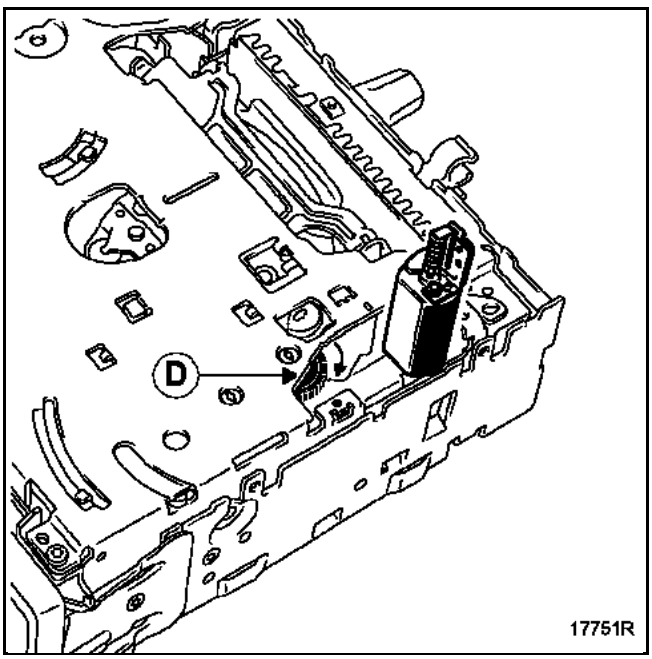

Before refitting the radio:

- refit the electric motor and attach it using the bolt (second solution only),
- refit the casing.

GETtheMANUALS.org

CHANGER IN THE DASHBOARD

REMOVAL

Remove the two screws (**A**).

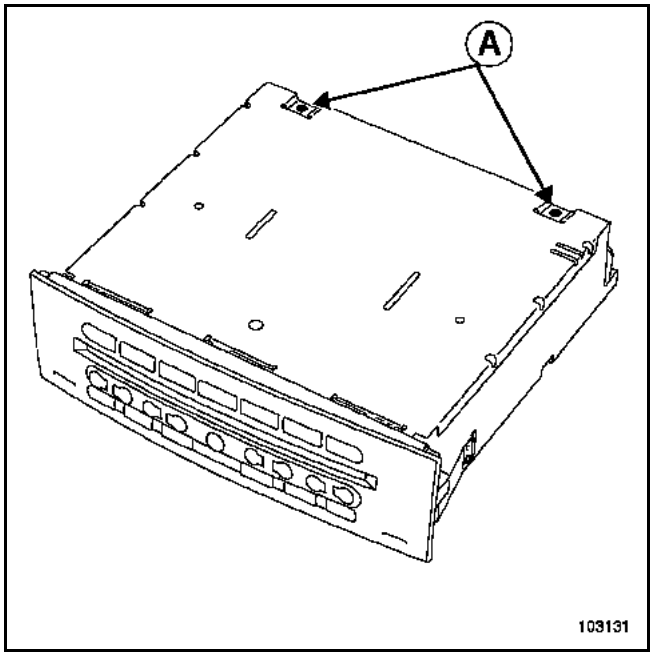

Turn the CD changer upside down.
Remove the 6 screws (**B**).

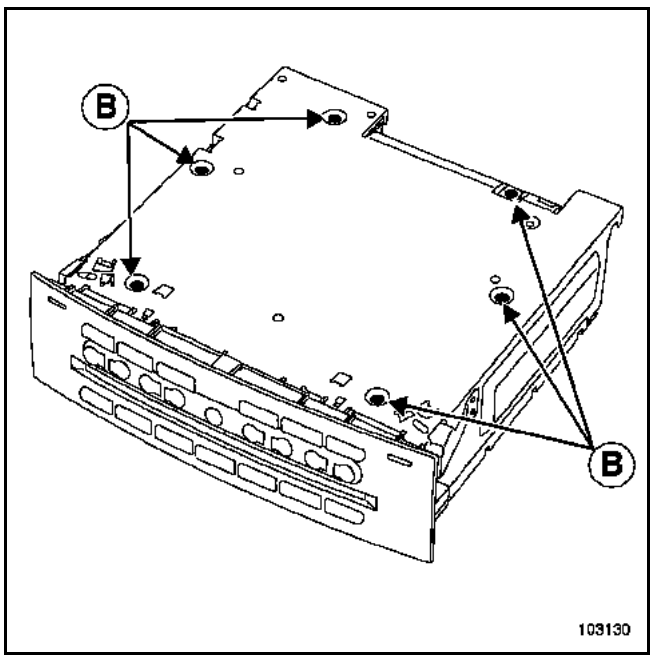

Turn the CD changer upside down.
Remove the cover.

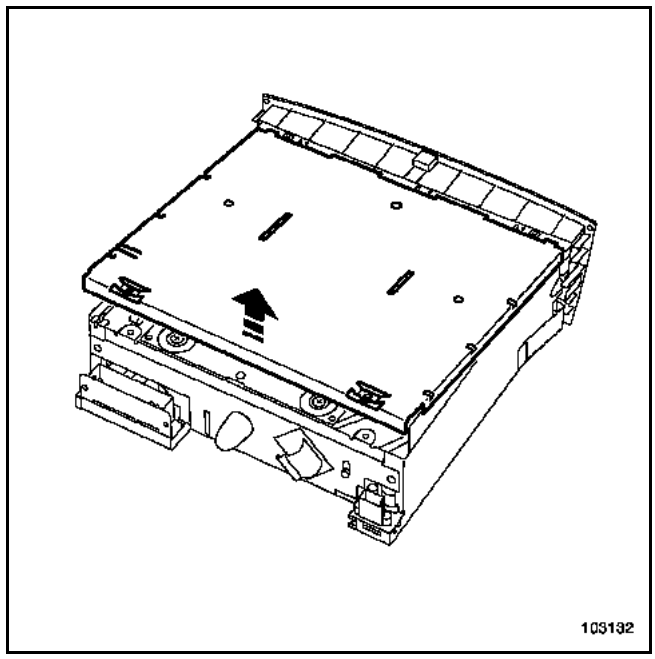

Remove the mechanism from its housing.

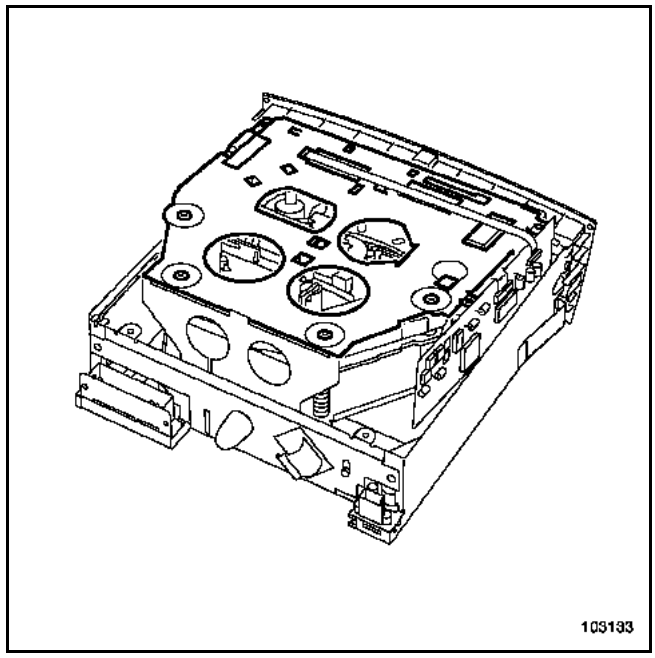

GETtheMANUALS.org

CHANGER IN THE DASHBOARD

Remove the two bolts (**C**).

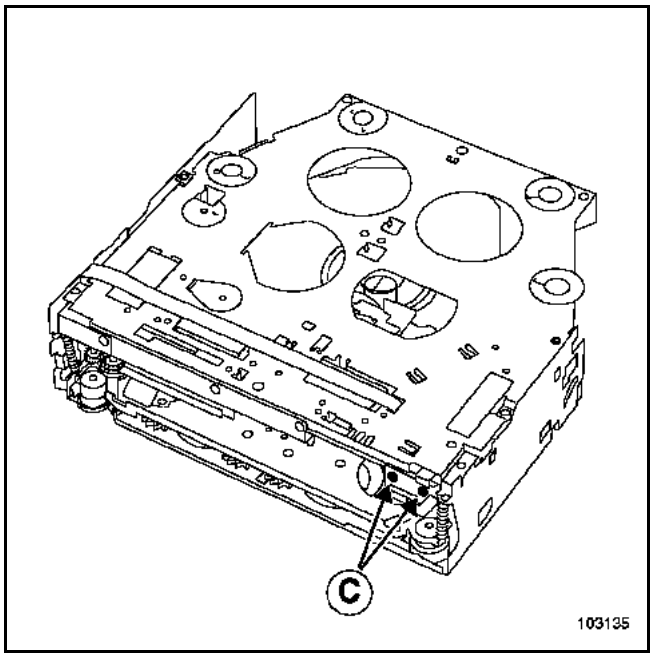

Remove the CD guide arm.
Disconnect connector (**D**).

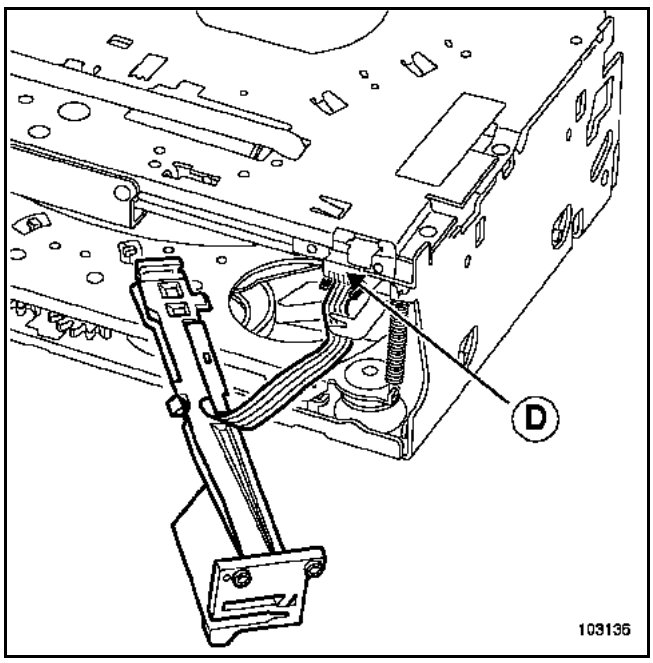

Remove the eight screws (**E**),

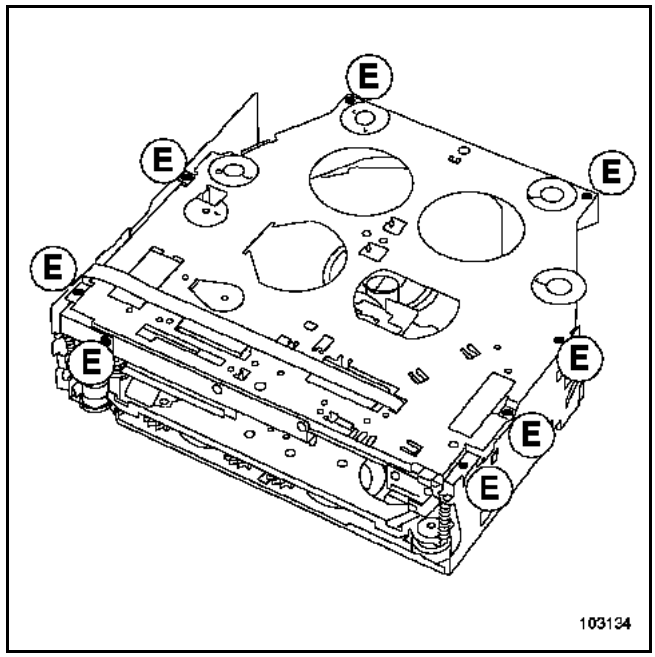

Remove both clips from the two connectors.

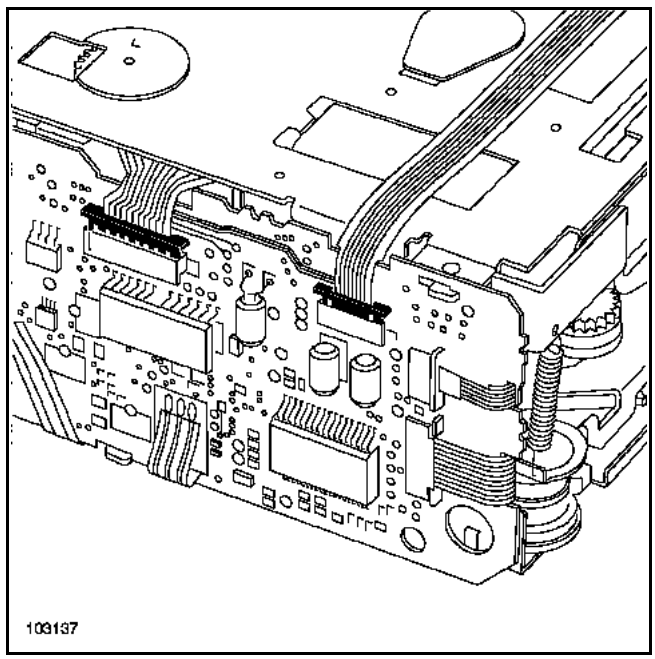

GETtheMANUALS.org

CHANGER IN THE DASHBOARD

Remove both ribbon cables.

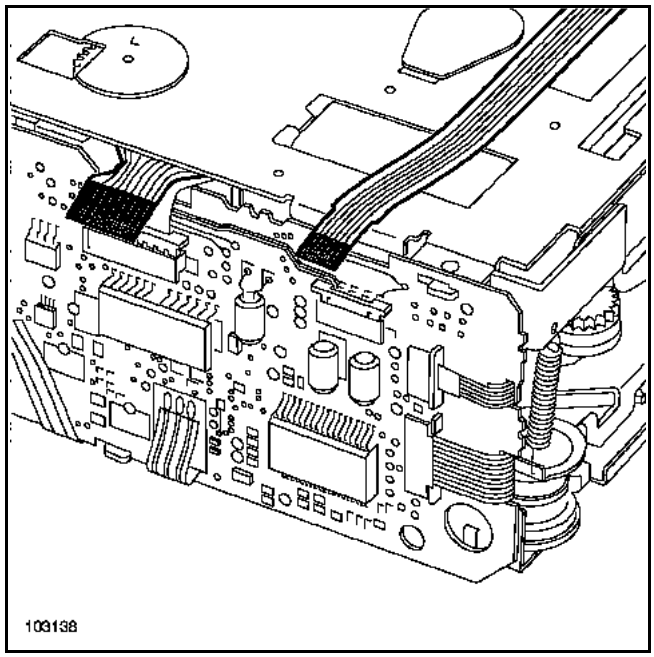

Remove the upper section of mechanism.

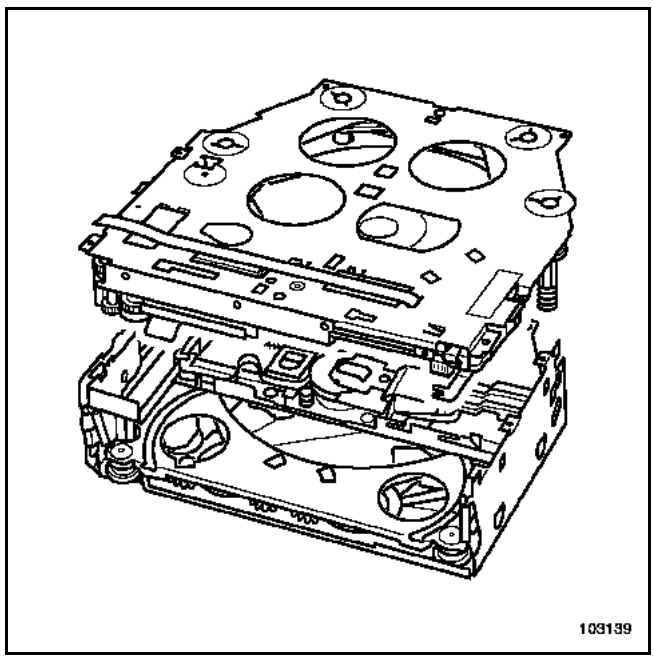

Turn the guides and push the mechanism as shown in the diagram in order to raise or lower the CDs.

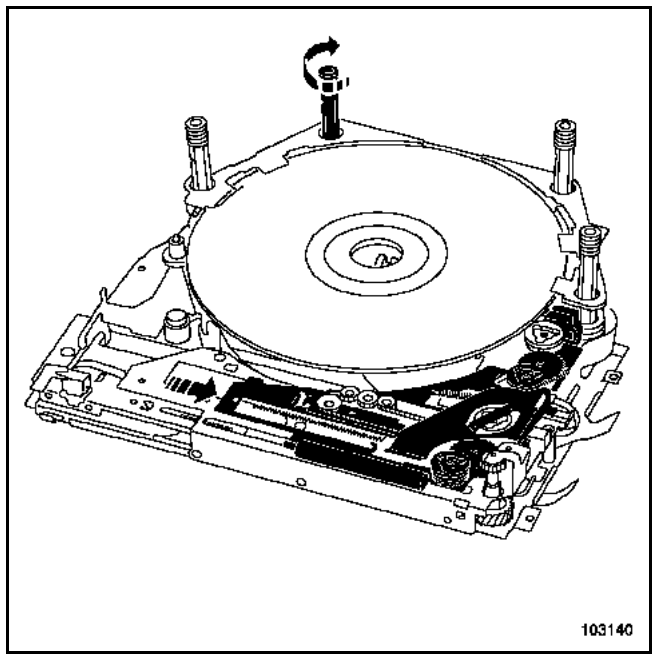

The CDs can now be accessed.

NOTE
Never refit the changer mechanism once it has been removed.

GETtheMANUALS.org

CHANGER IN THE BOOT

Remove:
– the three screws (**1**) located underneath the unit,

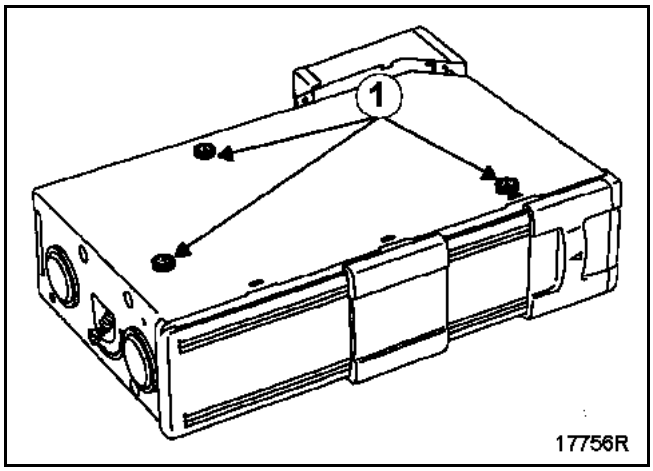

– the two springs (**2**) after bringing them to the upper position,

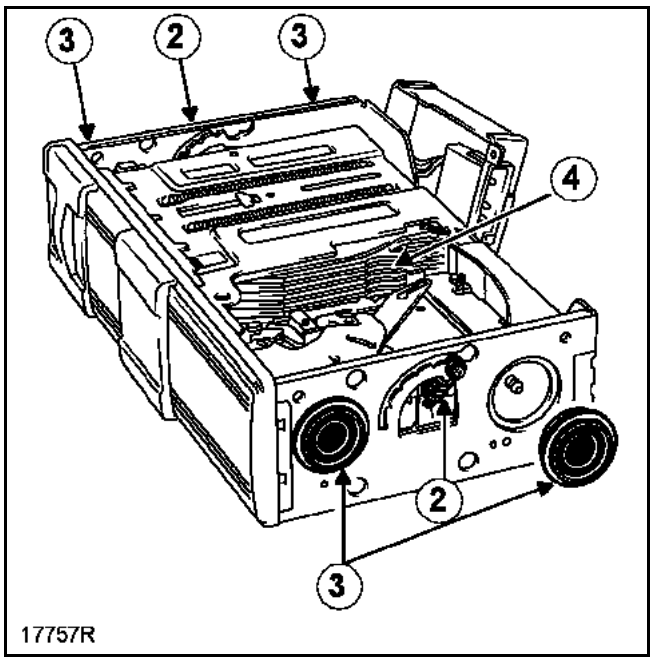

– the four dampers (**3**) (clipped on).

Remove the electronic module from the mounting and refit it to the side.

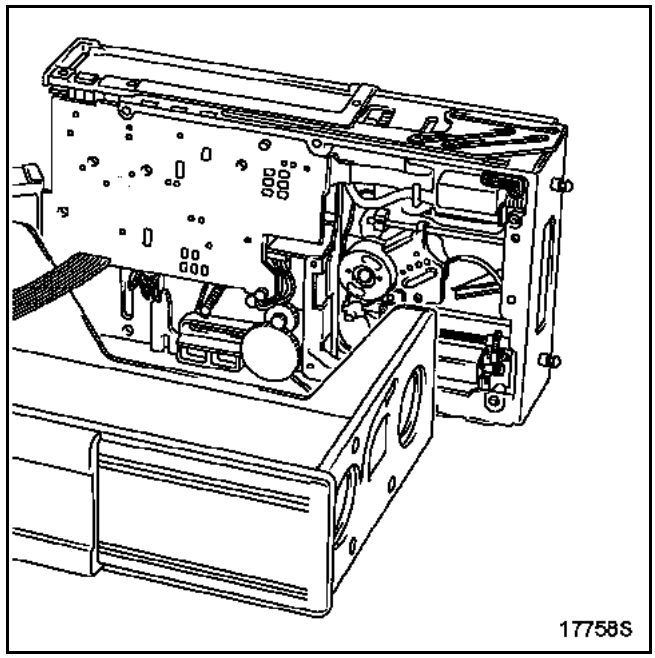

First solution

If the electric motors are operating:

1 Reinsert the CD and its drawer into the changer (**4**) using a 4.5 V battery to supply the electric motor (**3**), (attach the + wire to contact (**1**) and the - wire to contact (**2**)).
2 Eject the changer by moving lever (**4**).

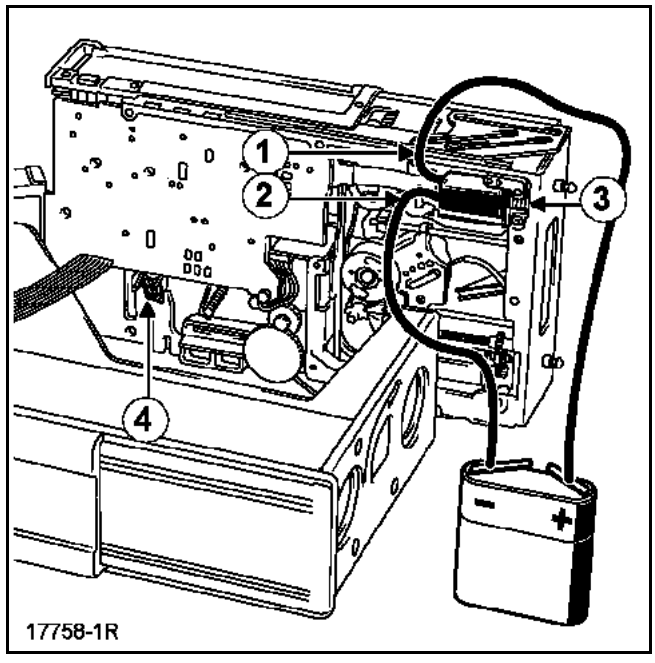

GETtheMANUALS.org

CHANGER IN THE BOOT

Second solution

If the electric motors are not operational:

1 To reinsert the CD and its drawer into changer (**5**), remove the pinion mounting (**6**) by its screw,

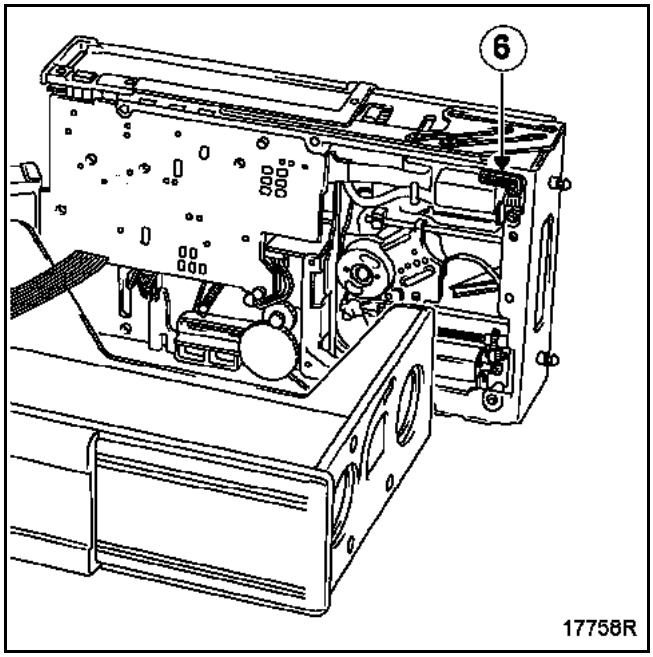

turn the toothed wheel (**7**) by hand in an anticlockwise direction until the drawer is turned completely upside down in the changer (**5**).

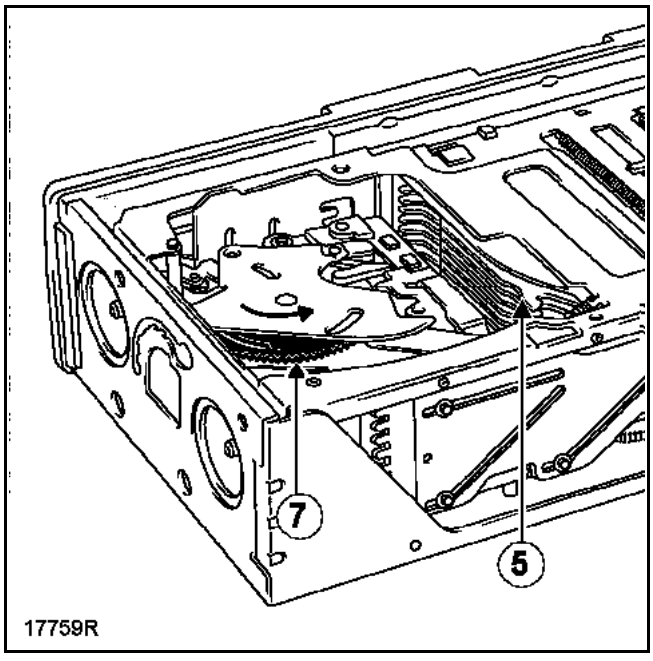

2 Eject the CD changer by moving the lever (**8**).

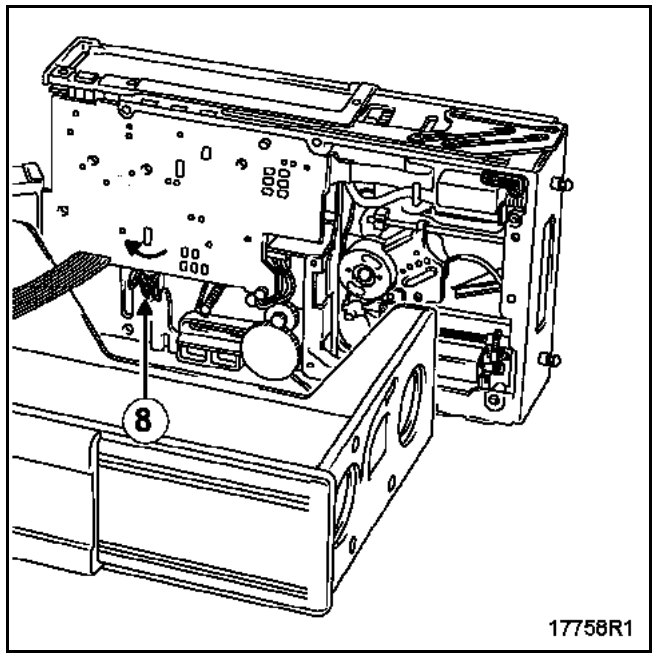

Before replacing the radio:

- refit the module in its unit, replace the four dampers and the two springs,
- attach the module to the unit using the three bolts,
- re-close the changer, attach its cover and refit the rear section.

GETtheMANUALS.org

VEL SATIS

8 Electrical equipment

83D SPEED CONTROL

ACC
Vdiag No.: 04
Vel Satis

Fault finding - Introduction	83D - 1
Fault finding - Fault check	83D - 3
Fault finding - Conformity check	83D - 32
Fault finding - Customer complaints	83D - 34
Fault finding - Fault finding chart	83D - 35

BJ0E - BJ0J - BJ0K - BJ0M - BJ0P - BJ0V

77 11 311 302 **FEBRUARY 2006** **EDITION ANGLAISE**

"The repair procedures given by the manufacturer in this document are based on the technical specifications current when it was prepared.

The methods may be modified as a result of changes introduced by the manufacturer in the production of the various component units and accessories from which his vehicles are constructed."

All rights reserved by Renault s.a.s.

Copying or translating, in part or in full, of this document or use of the service part reference numbering system is forbidden without the prior written authority of Renault s.a.s.

© Renault s.a.s. 2006

SPEED CONTROL
Fault finding - Introduction

GETtheMANUALS.org

This fault finding procedure is applicable to the VEL SATIS Vdiag 04 distance control function.

The values given in this Workshop Repair Manual are only guidelines.

It is essential to use: the vehicle wiring diagram and the relevant section in the Workshop Repair Manual for the part of your vehicle which needs to be repaired

DESCRIPTION OF THE FAULT FINDING STAGES

FAULT CHECKING:

It is essential to start with this stage before starting any work on the vehicle.

1 - Order of priority

You should deal with electrical faults declared as present first, then those stored. Other priorities are dealt with in the NOTES section in the diagnostic test for the fault in question. In any case, it is vital to check the condition of the battery before starting the diagnostic test as a low battery voltage risks interfering with the computer.

2 - Fault

a) Present:

Deal with the fault as specified in the FAULT INTERPRETATION section.

b) Stored:

Note the faults displayed. Follow the guidelines in the NOTES section for the fault in question.

If the fault is confirmed in the Notes section:

The fault is present once again. In this case, deal with the fault.

If the fault is not confirmed by the Notes section:

Carry out the basic checks. Check:

- the electrical lines which correspond to the fault,
- the connectors for these lines (for oxydation, bent pins, etc.),
- the resistance of the faulty component,
- the wiring protection (insulation melted or cut, friction, etc.).

3 - Absence of faults:

If no more faults are indicated by the diagnostic tool, you should carry out a conformity check. This may help in detecting a problem.

GETtheMANUALS.org

CONFORMITY CHECK

The aim of the conformity test is to check the states which do not display a fault on the diagnostic tool when they are outside the permitted tolerance values. This stage:

– diagnoses faults that do not have a fault display, and which may correspond to a customer complaint.

– checks that the radar is functioning correctly and ensures that the fault will not appear after repair.

This section gives the fault finding procedures for states and parameters and the conditions for checking them.

If a state is not operating normally or a parameter is outside permitted tolerance values, you should consult the corresponding fault finding page.

CORRECT DIAGNOSTIC TOOL TEST

If the check using the diagnostic tool is satisfactory, but the customer complaint is still present, the problem should be dealt with using the **Customer complaint** diagnostic.

IT IS ESSENTIAL TO ALIGN THE RADAR EACH TIME THE WHEEL ALIGNMENT IS ADJUSTED, THE COMPUTER IS CHANGED, OR THE PROXIMITY CONTROL FUNCTIONS ABNORMALLY.

BEFORE ADJUSTING, IT IS VITAL TO CHECK THAT THE BATTERY IS WELL CHARGED.

GETtheMANUALS.org

DF001 PRESENT OR STORED	BATTERY VOLTAGE TOO LOW 1.DEF: Supply voltage too low

NOTES	None.

Ensure that **the battery terminals are not oxidised.** Clean the terminals if necessary.
Check the voltage at the battery terminals. Recharge the battery if necessary. Using parameter **PR013 (computer feed voltage) check the computer feed voltage.**
Check **the condition of the radar connector**. Repair or replace the connector if necessary.
Check the connection between **track 3 of the black fuse and relay box 9-track connector** and **track 12 of the radar connector.** Repair or replace the harness if necessary.
Check the wiring between **the alternator and the battery.** Repair or replace the wiring if necessary.
Check the voltage supplied by the **regulator**. Replace the regulator if necessary.

AFTER REPAIR	Clear the computer memory, road test the vehicle and test again with the fault finding tool.

GETtheMANUALS.org

DF002 PRESENT OR STORED	OVERVOLTAGE 1.DEF: Supply voltage too high

NOTES	None.

Using parameter **PR013 (computer feed voltage) check the computer feed voltage.**
Check the voltage at the **battery terminals**.
Check that **the battery follows the recommendations.** Replace the battery if necessary.
Check the voltage supplied by **the regulator** and **the connection between the alternator and the battery.** Replace the regulator if necessary.

AFTER REPAIR	Clear the computer memory, road test the vehicle and test again with the fault finding tool.

GETtheMANUALS.org

DF003 PRESENT OR STORED	INTERNAL ELECTRONICAL FAULT 1.DEF: Internal electronical fault.

NOTES	None.

Using the diagnostic tool check **the parameters PR033** (voltage feed during a fault) and **PR036** (radar internal temperature) **to confirm that they are not the cause of the fault**.

Important: these parameters are stored when the fault appears. Select and confirm the fault in order to display them on the screen.

Erase the faults with the fault finding tool.

Turn the ignition on and off **3 three times** to make sure that **no electrical disturbance is interfering with the radar.**

If the fault persists, replace the radar.

AFTER REPAIR	Clear the computer memory, road test the vehicle and test again with the fault finding tool.

GETtheMANUALS.org

DF004 PRESENT OR STORED	COMPUTER OVERHEATING 1.DEF: This fault results from a rise in temperature in the computer linked to the external temperature

NOTES	None.

Using parameter PR036 (radar internal temperature) **check the internal temperature of the radar**.

The temperature **should not be above 120°C.**

Let it cool down if necessary.

Important: this parameter is stored when the fault appears. Select and confirm the fault to display it on the screen.

Check **the computer mounting** (heat exchange).
Repair if necessary.

Check **the conformity of the vehicle equipment** (engine compartment cooling).
Repair if necessary.

If the fault persists, replace the radar.

AFTER REPAIR	Clear the computer memory, road test the vehicle and test again with the fault finding tool.

GETtheMANUALS.org

DF005 PRESENT OR STORED	MULTIPLEX NETWORK 1.DEF: Short circuit on the multiplex network: check the multiplex network using the fault finding procedure

NOTES	None.

Carry out a **multiplex network test** using the diagnostic tool.
Repair or replace any faulty components.

AFTER REPAIR	Clear the fault memory. Carry out a new multiplex network test in order to confirm the repair.

GETtheMANUALS.org

DF006 PRESENT OR STORED	NO INJECTION MULTIPLEX SIGNAL 1.DEF: Inconsistent data 2.DEF: No signal

NOTES	None.

1.DEF	Using the diagnostic tool, carry out a **multiplex network test.** Repair if necessary.
	Using the diagnostic tool, carry out an **injection system test**. Repair if necessary.

2.DEF	Check **the condition of radar connector**. Repair if necessary.
	Using the diagnostic tool, carry out a **multiplex network test.** Repair if necessary.
	Ensure that there are no faults present or stored on the injection system.

AFTER REPAIR	Clear the fault memory. Carry out a new multiplex network test in order to confirm the repair.

GETtheMANUALS.org

DF007 PRESENT OR STORED	NO ABS MULTIPLEX SIGNAL 1.DEF: Inconsistent data 2.DEF: No signal

NOTES	None.

1.DEF	Using the diagnostic tool, carry out a **multiplex network test.** Repair if necessary.
	Using the diagnostic tool, carry out an **ABS test**. Repair if necessary.

2.DEF	Check **the condition of the radar connector**. Repair if necessary.
	Using the diagnostic tool, carry out a **multiplex network test.** Repair if necessary.
	Ensure that there are no faults present or stored on the ABS system.

AFTER REPAIR	Clear the fault memory. Carry out a new multiplex network test in order to confirm the repair.

GETtheMANUALS.org

DF008 PRESENT OR STORED	INSTRUMENT PANEL MULTIPLEX SIGNAL ABSENT 1.DEF: Inconsistent data 2.DEF: No signal

NOTES	None.

1.DEF	Using the diagnostic tool, carry out a **multiplex network test.** Repair if necessary.
	Using the diagnostic tool, carry out an **instrument panel test.** Repair if necessary.

2.DEF	Check **the condition of the radar connector**. Repair if necessary.
	Using the diagnostic tool, carry out a **multiplex network test.** Repair if necessary.
	Ensure that there are no faults present or stored on the instrument panel.

AFTER REPAIR	Clear the fault memory. Carry out a new multiplex network test in order to confirm the repair.

GETtheMANUALS.org

DF009 PRESENT OR STORED	INVALID INJECTION MULTIPLEX SIGNALS 1.DEF: Inconsistent data

NOTES	None.

Using the diagnostic tool, carry out a **multiplex network test.** Repair if necessary.
Perform a **complete check of the injection system** using the diagnostic tool. Repair if necessary.

AFTER REPAIR	Clear the fault memory. Carry out a new multiplex network test in order to confirm the repair.

GETtheMANUALS.org

DF010 PRESENT OR STORED	INVALID ABS MULTIPLEX SIGNALS 1.DEF: Inconsistent data

NOTES	None.

Using the diagnostic tool, carry out a **multiplex network test.** Repair if necessary.
Perform a **complete check of the ABS system** using the diagnostic tool. Repair if necessary.

AFTER REPAIR	Clear the fault memory. Carry out a new multiplex network test in order to confirm the repair.

GETtheMANUALS.org

DF011 PRESENT OR STORED	INVALID AUTOMATIC TRANSMISSION MULTIPLEX SIGNALS. 1.DEF: Inconsistent data

NOTES	None.

Using the diagnostic tool, carry out a **multiplex network test.** Repair if necessary.
Perform a **complete check of the automatic transmission** using the diagnostic tool. Repair if necessary.

AFTER REPAIR	Clear the fault memory. Carry out a new multiplex network test in order to confirm the repair.

GETtheMANUALS.org

DF012 PRESENT OR STORED	INVALID INSTRUMENT PANEL MULTIPLEX SIGNALS 1.DEF: Inconsistent data

NOTES	None.

Using the diagnostic tool, carry out a **multiplex network test.** Repair if necessary.
Perform a **complete check of the instrument panel** using the diagnostic tool. Repair if necessary.

AFTER REPAIR	Clear the fault memory. Carry out a new multiplex network test in order to confirm the repair.

GETtheMANUALS.org

DF013 PRESENT OR STORED	COMPUTER CALIBRATION 1.DEF: Storage memory area fault

NOTES	None.

Using the diagnostic tool, **clear the stored faults**.
If the fault persists, **replace the radar**.

AFTER REPAIR	Carry out a road test to confirm that the radar is functioning correctly.

GETtheMANUALS.org

DF014 PRESENT OR STORED	INJECTION MULTIPLEX SIGNALS CONSISTENCY. 1.DEF: Inconsistent data

NOTES	None.

Using the diagnostic tool, carry out a **multiplex network test.** Repair if necessary.
Perform a **complete check of the injection system** using the diagnostic tool. Repair if necessary.

AFTER REPAIR	Clear the fault memory. Switch on the ignition in order to confirm the repair.

GETtheMANUALS.org

DF015 PRESENT OR STORED	ABS MULTIPLEX SIGNALS CONSISTENCY. 1.DEF: Inconsistent data

NOTES	None.

Using the diagnostic tool, carry out a **multiplex network test.** Repair if necessary.
Perform a **complete check of the ABS system** using the diagnostic tool. Repair if necessary.

AFTER REPAIR	Clear the fault memory. Switch on the ignition in order to confirm the repair.

GETtheMANUALS.org

DF016 PRESENT OR STORED	INJECTION FAULT DETECTION 1.DEF: Unidentified electrical fault

NOTES	None.

Using the diagnostic tool, carry out a **multiplex network test.**
Repair if necessary.

Carry out a **complete check of the injection system** using the diagnostic tool.
Repair if necessary.

AFTER REPAIR	Clear the fault memory. Switch on the ignition in order to confirm the repair.

GETtheMANUALS.org

DF017 PRESENT OR STORED	ABS FAULT DETECTION 1.DEF: Unidentified electrical fault

NOTES	None.

Using the diagnostic tool, carry out a **multiplex network test.** Repair if necessary.
Perform a **complete check of the ABS system** using the diagnostic tool. Repair if necessary.

AFTER REPAIR	Clear the fault memory. Switch on the ignition in order to confirm the repair.

GETtheMANUALS.org

DF018 PRESENT OR STORED	AUTOMATIC GEARBOX FAULT DETECTION 1.DEF: Unidentified electrical fault

NOTES	None.

Using the diagnostic tool, carry out a **multiplex network test.** Repair if necessary.
Perform a **complete check of the automatic transmission** using the diagnostic tool. Repair if necessary.

AFTER REPAIR	Clear the fault memory. Switch on the ignition in order to confirm the repair.

GETtheMANUALS.org

DF019 PRESENT OR STORED	INSTRUMENT PANEL FAULT DETECTION 1.DEF: Unidentified electrical fault

NOTES	None.

Using the diagnostic tool, carry out a **multiplex network test.** Repair if necessary.
Perform a **complete check of the instrument panel** using the diagnostic tool. Repair if necessary.

AFTER REPAIR	Clear the fault memory. Switch on the ignition in order to confirm the repair.

GETtheMANUALS.org

DF020 PRESENT OR STORED	BRAKE PEDAL 1.DEF : brake switch signal through CAN

NOTES	None.

Carry out a **multiplex network test.**
Repair if necessary.

Using the diagnostic tool, **check the ABS system and the condition of the brake pedal.**
Adjust the brake pedal connector if necessary.

AFTER REPAIR	Clear the fault memory. Switch on the ignition in order to confirm the repair.

GETtheMANUALS.org

DF022 PRESENT OR STORED	BRAKE LIGHTS DEF: faults linked to a fuse or a brake light bulb

NOTES	The radar disengages when the UCH detects a brake lighting fault.

Check that the brake lights are on.
Check the bulbs if necessary.

Using the diagnostic tool, carry out a fault finding procedure on the PASSENGER COMPARTMENT INTERCONNECTION UNIT, check the faults.

AFTER REPAIR	Repeat the test with the diagnostic tool.

GETtheMANUALS.org

DF023 PRESENT OR STORED	COMMAND NOT UNDERSTOOD BY INJECTION OR ABS 1.DEF: Unidentified electrical fault

NOTES	None.

Carry out a test on the multiplex network and a fault finding procedure on the injection and ABS.
Repair if necessary.

AFTER REPAIR	Repeat the test with the diagnostic tool.

GETtheMANUALS.org

DF024 PRESENT OR STORED	CRUISE CONTROL STATE 1.DEF: Inconsistent data

NOTES	Switch on the ignition.

1.DEF	Using the diagnostic tool, carry out a **multiplex network test.** Repair if necessary.
	Using the diagnostic tool, carry out an **injection system test and check that the states correspond with the buttons pressed on the regulator (+, -, ...).** Repair if necessary.

AFTER REPAIR	Clear the fault memory. Carry out a new multiplex network test in order to confirm the repair.

GETtheMANUALS.org

DF025 PRESENT OR STORED	RADAR MISALIGNED 1.DEF : radar misaligned

NOTES	None.

Click on the fault to display the radar misalignment (the radar sends back a misalignment range - in degrees - but does not indicate the direction of misalignment).

Using the diagnostic tool, apply the radar alignment procedure.
Specific command: SC001 (radar alignment with alignment tool).

AFTER REPAIR	Clear the faults and the misalignment.

GETtheMANUALS.org

DF026 PRESENT OR STORED	NO UCH MULTIPLEX SIGNAL. 1.DEF: Inconsistent data 2.DEF: No signal

NOTES	Switch on the ignition.

1.DEF	Using the diagnostic tool, carry out a **multiplex network test.** Repair if necessary.
	Using the diagnostic tool, carry out a **INTERCONNECTION UNIT AND IMMOBILISER test.** Repair if necessary.

2.DEF	Check **the condition of the radar connector**. Repair if necessary.
	Using the diagnostic tool, carry out a **multiplex network test.** Repair if necessary.
	Ensure that there are no faults present or stored in the IMMOBILISER and INTERCONNECTION UNIT.

AFTER REPAIR	Clear the fault memory. Carry out a new multiplex network test in order to confirm the repair.

GETtheMANUALS.org

DF028 PRESENT OR STORED	NO AUTOMATIC GEARBOX MULTIPLEX SIGNAL. 1.DEF: Inconsistent data 2.DEF: No signal

NOTES	Switch on the ignition.

1.DEF	Using the diagnostic tool, carry out a **multiplex network test.** Repair if necessary.
	Test **the automatic transmission using the diagnostic tool.** Repair if necessary.

2.DEF	Check **the condition of the radar connector**. Repair if necessary.
	Using the diagnostic tool, carry out a **multiplex network test.** Repair if necessary.
	Ensure that there are no faults present or stored on the automatic transmission.

AFTER REPAIR	Clear the fault memory. Carry out a new multiplex network test in order to confirm the repair.

GETtheMANUALS.org

DF029 PRESENT OR STORED	YAW SPEED SENSOR DEF: Transversal acceleration and yaw speed sensor (dual sensor) signals not present on dedicated ABS mutliplex network

NOTES	None.

Carry out a **multiplex network test.**
Repair if necessary.

Using the diagnostic tool, **check the ABS and the calibration and operation of the yaw and transversal acceleration sensor.**

AFTER REPAIR	Clear the fault memory. Switch on the ignition in order to confirm the repair.

GETtheMANUALS.org

DF030 PRESENT OR STORED	YAW SPEED CONSISTENCY 1.DEF: Transversal acceleration and yaw speed sensor (dual sensor) signals not present on dedicated ABS mutliplex network

NOTES	None.

Carry out a **multiplex network test.**
Repair if necessary.

Using the diagnostic tool, **check the ABS and the calibration and operation of the yaw and transversal acceleration sensor.**

AFTER REPAIR	Clear the fault memory. Switch on the ignition in order to confirm the repair.

GETtheMANUALS.org

DF031 PRESENT OR STORED	STEERING COLUMN CONTROLS DEF: Inconsistent data

NOTES	None.

Carry out a **multiplex network test.**
Repair if necessary.

Using the diagnostic tool, **check the injection computer and the steering column controls are operating correctly.**

AFTER REPAIR	Clear the fault memory. Switch on the ignition in order to confirm the repair.

GETtheMANUALS.org

NOTES	Only check the conformity after a **complete check** with the diagnostic tool. **Test conditions: engine stopped, ignition on.**

Order	Function	Parameter or state Check or action	Display and notes	Fault finding
1	Computer electrical supply	**PR013:** computer supply voltage	**10 v < x < 15 v**	**If there is a problem,** carry out the fault finding procedure **DF001**: battery voltage too low **DF002**: overvoltage
2	Proximity control	**ET004:** proximity control	**OFF**	Switch on centre console in middle position.
			INACTIVE	Waiting for a cruising speed and headway to be selected.
			DEACTIVATED	**System updated following:** – driver braking – a vehicle speed below the limit of the system engine speed range of **18 mph (30 km/h)**
			STATE 1	only brakes in operation
			STATE 2	Maintaining speed and distance
			STATE 3	Inhibited by acceleration
			FAULTY	System faulty
3	Headway	**PR014:** headway	**1 second**	Headway: short
			1.4 seconds	Headway: medium
			2 seconds	Headway:long

SPEED CONTROL
Fault finding - Conformity check

GETtheMANUALS.org

NOTES	Only check the conformity after a **complete check** with the diagnostic tool. **Test conditions: engine stopped, ignition on**.

Order	Function	Parameter or state Check or action	Display and notes	Fault finding
4	radar misalignment	**PR015:** radar misalignment	**X degrees**	Refer to the Workshop Repair Manual for information on how to adjust the radar.

GETtheMANUALS.org

RECORDED FAULTS

ERRATIC ACCELERATION	CHART 1
ERRATIC BRAKING (COLLISION ADJUSTMENT)	CHART 2
DELAY IN DETECTING TARGET	CHART 3
NO DECELERATION WHEN TARGET APPEARS	CHART 4
MOMENTARY LOSS OF TARGET	CHART 5
DISTANCE ERROR	CHART 6
SUDDEN CHANGE IN HEADWAY	CHART 7
DISCONNECTION WITHOUT DRIVER INTERVENTION	CHART 8
SYSTEM CONTINUALLY ACTIVE	CHART 9
NO SIGNALS (VISUAL AND/OR SOUND)	CHART 10
INCORRECT SIGNAL DISPLAYED	CHART 11
SYSTEM CANNOT BE ACTIVATED	CHART 12
CONTROLS INCONSISTENT	CHART 13

GETtheMANUALS.org

CHART 1	Erratic acceleration

NOTES	Check that there are no present or stored faults. Carry out a fault finding procedure of the multiplex network and the ESP.

If the problem persists, replace the radar.

AFTER REPAIR	

GETtheMANUALS.org

CHART 2	Erratic braking (impact compensation)

NOTES	Check that there are no present or stored faults. Carry out a fault finding procedure of the multiplex network and the ESP.

Realign the radar.
If the problem persists, replace the radar.

AFTER REPAIR	

GETtheMANUALS.org

CHART 3	Delay in detecting target

NOTES	Check that there are no present or stored faults.

Realign the radar.
If the problem persists, replace the radar.

AFTER REPAIR	

GETtheMANUALS.org

CHART 4	No deceleration when a target appears

NOTES	Check that there are no present or stored faults. Perform a fault finding procedure on the ABS and: – check that there are no faults, – test the brake servo.

Take the driving conditions into account: It may be that the radar is losing the target around bends or when a car pulls out, etc.

↓

Realign the radar.
If the problem persists, replace the radar.

AFTER REPAIR	

GETtheMANUALS.org

CHART 5	Momentary loss of target

NOTES	Check that there are no present or stored faults.

Take the driving conditions into account: It may be that the radar is losing the target around bends or the car is moving in zigzags, etc.

↓

Realign the radar.
If the problem persists, replace the radar.

AFTER REPAIR	

GETtheMANUALS.org

CHART 6	Distance error

NOTES	Check that there are no present or stored faults. Check the headway distance selected.

Replace the radar.

AFTER REPAIR	

GETtheMANUALS.org

CHART 7	Sudden change in headway

NOTES	Check that there are no present or stored faults. Check the parameter headway distance selected.

Carry out a fault finding procedure on the UCH and check that the lighting and wiper states are consistent.

↓

Replace the radar.

AFTER REPAIR	

GETtheMANUALS.org

CHART 8	Disconnection without driver intervention

NOTES	The radar may become disconnected: – if the target vehicle is travelling at a speed of below **12 mph (20km/h)**, – if the ESP (Electronic stabilty program) is adjusting, – if the brake lights are blown, etc. If, however, the radar cannot be activated, refer to chart 12.

Check that there are no faults.
Carry out a fault finding procedure on the injection and the ESP, check that the states correspond with the commands selected on the distance regulator (+, - , ...).

Replace the radar.

AFTER REPAIR	

GETtheMANUALS.org

CHART 9	System continually active

NOTES	None.

Check that there are no faults.
Carry out a fault finding procedure on the injection and check that the states correspond with the commands selected on the distance regulator (+, - , ...).
Carry out a fault finding procedure on the UCH and check that the states correspond to the indicators.

↓

Replace the radar.

AFTER REPAIR	

GETtheMANUALS.org

CHART 10	No signals (visual and / or sound)

NOTES	None.

Check that there are no faults.
Carry out the fault finding procedure for the multiplex network and the instrument panel.
Carry out a self-diagnostic test on the instrument panel and check the images on the display (the self-diagnostic test is initiated by pressing the driving assistance button while switching on the ignition at the same time.To scroll through the images, press the driving assistance button).

↓

Replace the radar.

AFTER REPAIR	

GETtheMANUALS.org

CHART 11	Incorrect signal displayed

NOTES	None.

Check that there are no faults.
Carry out a fault finding procedure for the multiplex network and the instrument panel.
Carry out a self-diagnostic test on the instrument panel and check the images on the display (the self-diagnostic test is initiated by pressing the driving assistance button while switching on the ignition. To scroll through the images, press the driving assistance button.

↓

Replace the radar.

AFTER REPAIR	

GETtheMANUALS.org

CHART 12	System cannot be activated proximity control unavailable

NOTES	Switch off the ignition and wait for the end of the power latch and switch the ignition back on.

Check that there are no faults.
Carry out a fault finding procedure on the multiplex network, the injection and the ABS/ESP on the automatic gearbox and the UCH.
Carry out a self-diagnostic test on the instrument panel and check the images on the display (the self-diagnostic test is initiated by pressing the driving assistance button while switching on the ignition. To scroll through the images, press the driving assistance button.

↓

Replace the radar.

AFTER REPAIR	

GETtheMANUALS.org

CHART 13	Controls inconsistent

NOTES	None.

Check that there are no faults.
Carry out a fault finding procedure on the multiplex network and the injection system.
Check that the controls are responding correctly.

↓

Replace the radar.

AFTER REPAIR	

GETtheMANUALS.org

VEL SATIS

8 Electrical equipment

86A RADIO

General Information	86A - 2
Security code recovery procedure	86A - 6
Anti-theft code	86A - 7
Configuration - Settings	86A - 10
Connections	86A - 11
Self-test procedure	86A - 12
Radio fault finding: Customer complaints	86A - 13
Fault finding chart	86A - 14
Recovering a jammed CD	86A - 28

V1 **Edition Anglaise**

"The repair procedures given by the manufacturer in this document are based on the technical specifications current when it was prepared.

The procedures may be modified as a result of changes introduced by the manufacturer in the production of the various component units and accessories from which his vehicles are constructed."

All rights reserved by Renault s.a.s.

Copying or translating, in part or in full, of this document or use of the service part reference numbering system is forbidden without the prior written authority of Renault s.a.s.

© Renault s.a.s.

GETtheMANUALS.org

The tuner-amplifier has a test menu (see radio self-test procedure) to carry out repair operations or fault finding.

The radio will operate for approximately 20 minutes without the ignition being switched to the accessories position. The radio beeps then switches off.

Diagram:

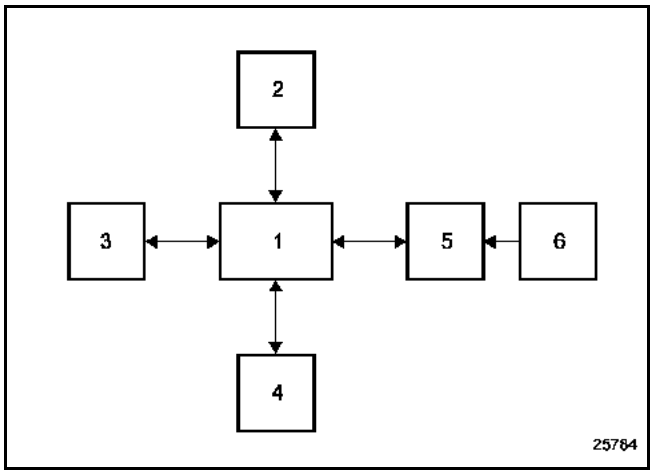

1 Radio
2 Aerial
3 CD changer
4 Speakers/tweeter speakers
5 Display
6 Steering wheel controls

GETtheMANUALS.org

Special features of radios in the PN range:
PN0: radio with built-in display.
PN1: radio with remote display.
PN2: radio and cassette player with built-in display.
PN3: radio and cassette player with remote display.
PN4: radio and CD player with built-in display.
PN5: radio and CD player with remote display.

Notes:
- All radios are designed to control a CD changer.
- There is a special procedure for replacing the CD changer located in the dashboard front panel.
- According to the vehicle version, the remote displays may have a 24 or 30-track connector or two 15-track connectors. This display may be built into the instrument panel.

GETtheMANUALS.org

The radio features allow you to:
– listen to the radio (four geographical zones can be programmed for FM radio)
– display the name of the station using RDS which automatically switches to the best transmitter (AF function),
– receive traffic news (**I Traffic** function),
– receive news flashes and emergency bulletins (**I News** function).
– receive public safety emergency bulletins (**PTY 31**).

RADIO FUNCTION

The tuner has three selection modes displayed on the screen and accessible from the radio front panel:
– manual mode (MANU),
– preset mode (PRESET),
– alphabetical mode (LIST).

CASSETTE FUNCTION

The cassette plays automatically once cassette mode has been selected using the steering wheel control or the front panel.

Only the Dolby fast-forward and rewind with search controls can be selected by specific buttons.

Note:
The Mute function, accessed via the voice synthesiser or the steering wheel control, stops the cassette playing.

CD FUNCTION

The CD player can play conventional discs and any audio tracks on a CD-ROM.

CDs can be played in order or tracks can be chosen at random.

If a CD changer is being used, random play is possible on only one of the possible 6 compact discs.

THERMAL PROTECTION

If the radio temperature is too high for it to function properly, the volume is automatically reduced (without changing the volume shown in the display).

Should one of the speaker tracks short circuit, the supply to the amplifier will be cut off.

GETtheMANUALS.org

VOLUME CONTROL

The volume can be increased according to the vehicle speed. To operate this function:
select the desired volume adjustment curve by using the **Expert** mode (press and hold the **Source** button until a bleep is heard): **SPEED 5** for maximum increase, **0** to cancel the increase.

GETtheMANUALS.org

2 methods for recovering the pre-code (1 letter and 3 digits):

1 For **PN** type radios:
The pre-code is recovered by removing the **RECEIVER** and noting the four characters on the barcode that follow the letter T (see photo no. 114936).
On older versions, note the series number at (**B**) and the pre-code after the letter T at (**C**).
2 For **NR** type radios
The pre-code is recovered **without removal**, by applying the following procedure:
- Switch on the radio.
- Press buttons 1 and 6 simultaneously for approximately 2 seconds.
- The pre-code appears on the display.

Note: on NR type radios, the pre-code remains visible at (A) on the radio (see photo no. 114937).

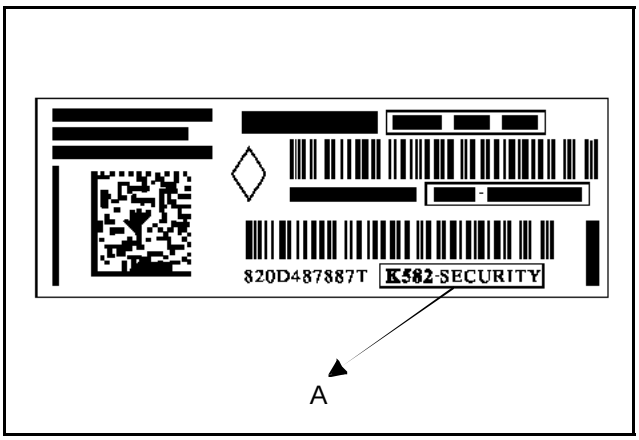

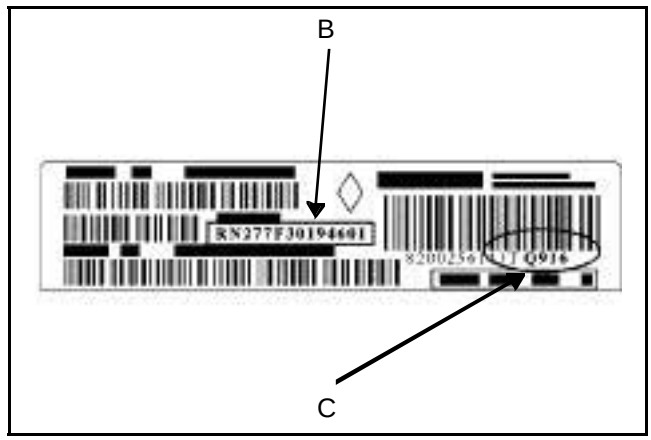

THE VIN MUST BE ENTERED IN ALL 4 SOLUTIONS

4 methods for recovering the radio code (4 digits):

1 **Only the VIN is available**: connect to code management on Renault.Net and enter the VIN. The code server gives the original radio code entered in the World Vehicle Database (BVM).

If the code has not been entered in the World Vehicle Database or is incorrect when the code is entered in the radio, follow the procedure below:
2 **The pre-code is available**: go back to code management on Renault.Net, enter the pre-code and obtain the radio code.
3 For older vehicles which do not have a radio pre-code, enter the series number of the radio again. For example, for Philips radio, this code starts with RN. In the photo of the radio, this code is RN277F30194601.

If this code is correct, the radio will operate again; if not, follow the procedure below:
4 On Renault.Net, write a help message to be sent to the assistance unit.

WHEN REPLACING PARTS, OR FOR AN UNKNOWN VIN, WRITE A HELP MESSAGE IN CODE MANAGEMENT ON RENAULT.NET TO UPDATE THE DATABASE.

GETtheMANUALS.org

The radio is protected by a four digit code. This code must be entered via the control satellite or the radio keypad each time the battery is disconnected.

Entering the code with the control on the steering wheel:
Press the lower button on the control to confirm an entry.

Entry via the radio:
Enter the digits using buttons 1, 2, 3 and 4, and then confirm with button 6.

If the code is entered incorrectly, the radio will be locked (1 minute for the first error, 2 minutes for the second error, 4 minutes for the third error, etc. 32 minutes maximum).

Some configurations must be set after the code has been entered for the first time (see the **Configuration** Section). These settings are stored when the battery is disconnected.

Reminder:
The radio will operate for approximately 2 minutes in scrambled mode without the code having been entered (with regular warning beeps).

If the vehicle is equipped with a CD changer in the front panel, a code is exchanged between the CD changer and the radio.
– If a new CD changer is fitted, the radio code is programmed when the battery or CD changer is connected.
– If the radio is replaced, enter the security code of the old radio connected to the CD changer. The CD changer is programmed with the code for the new radio.
– If the old radio code is lost, the changer code can be cleared using the clearing code. The clearing code is issued by the Techline, server, etc.

Note:
If there is a configuration error, you can return to scrambled mode by pressing the 2 and 5 buttons at the same time as switching the power on. Then wait 2 minutes.

Note:
The CD changer is supplied uncoded. When it is installed in the vehicle, the CD changer is programmed with the radio supply code.

Reminder:
The radio will operate for approximately 2 minutes in scrambled mode without the code having been entered (with regular warning beeps).

IMPORTANT
If the vehicle is fitted with a top of the range navigation system (ITS), enter the radio code in the following way:
1. switch on the system by activating the vehicle's + after ignition feed,
2. wait 2 minutes: scrambled mode with beeps from the speakers, then code request screen appears,
3. enter the radio code using the ITS keypad: move the cursor with the central control and press to confirm.
4. switch off the ignition.

GETtheMANUALS.org

THE DISPLAY SHOWS 'CODE' OR '0000'

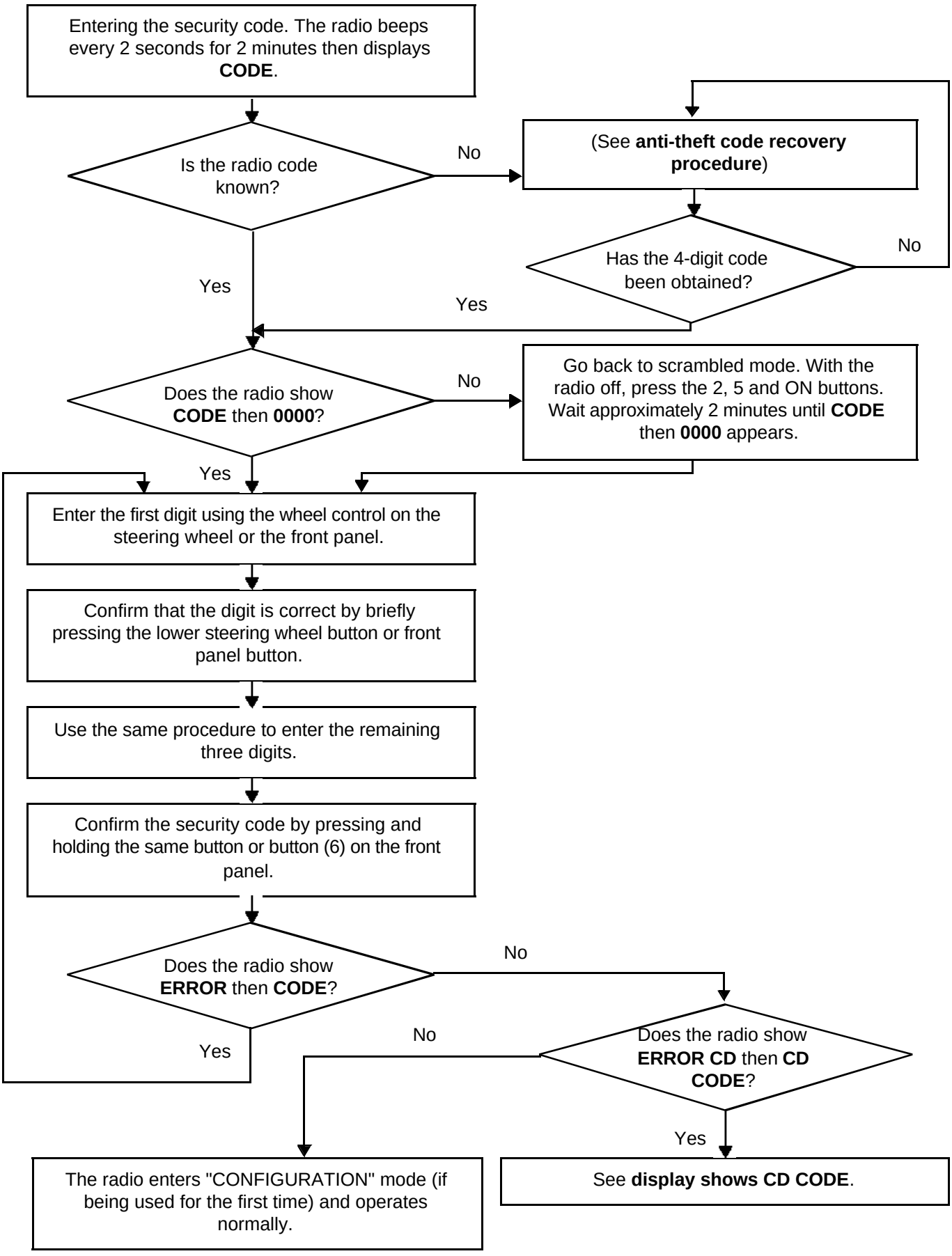

GETtheMANUALS.org

THE DISPLAY SHOWS "CD CODE"

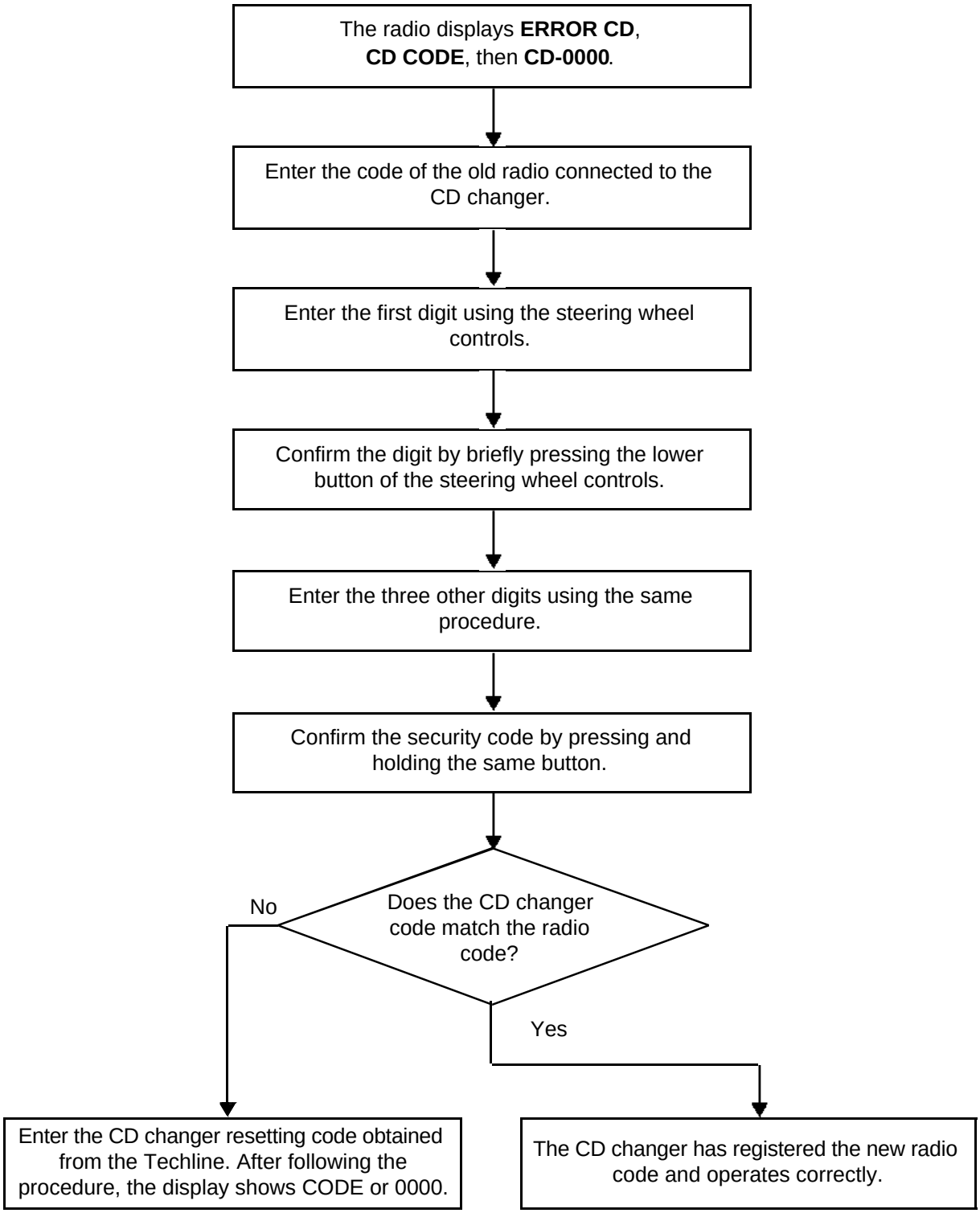

GETtheMANUALS.org

CONFIGURATIONS

NOTE:
To select the zone in which the radio is to be used, press the buttons **2** and **5** while switching the power on. Then wait approximately 2 min. Enter the four digit code and then:

- select the tone curve appropriate for the vehicle
  - 0: no regulation
  - 1: Twingo
  - 2: Clio
  - 3: Mégane / Scénic
  - 4: Laguna
  - 5: Vel Satis - Espace

- select the relevant zone:
  - **America**
  - **Japan**
  - **Asia**
  - **Arabia**
  - **Others** (Europe, Africa, other)

Note:
These configurations are not required when the secret code is entered after the power supply has been cut.

SETTINGS

To enter configuration mode (**Expert** mode), press and hold the **Source** button (4 seconds) until you hear a bleep. This allows you to adjust the following functions:

NR range:
- AF mode activation (automatic retuning),
- vehicle speed-dependent volume control (5 for maximum regulation, 0 to cancel regulation),
- **Loudness** mode activation.

PN range:
- AF mode activation (automatic retuning),
- vehicle speed-dependent volume control (5 for maximum regulation, 0 to cancel regulation),
- **Loudness** mode activation,
- **Assisted tuner** mode activation,
- configuration of the number of **speakers** (2 or 4),
- manual or dynamic list selection.

PN6 radio:
- AF mode activation (automatic retuning),
- vehicle speed-dependent volume control (5 for maximum regulation, 0 to cancel regulation),
- **Loudness** mode activation,
- **Assisted tuner** mode activation,
- configuration of the number of **speakers** (2 or 4),
- manual or dynamic list selection.
- activation of data storage in accordance with the RENAULT Card: **CARD ON/OFF**. To operate, the radio must be accompanied by the navigation system.

GETtheMANUALS.org

To allocate the tracks for the different functions that are connected to the radio (CD changer, steering wheel control, display, aerial), refer to the Wiring Diagrams Technical Note corresponding to the vehicle.

Radio: see Wiring diagrams Technical Note, vehicle, code **261**

CD changer: see Wiring diagrams Technical Note, vehicle, code **1272**

Display: see Wiring diagrams Technical Note, vehicle, code **1127**
For displays which are connected to the instrument panel, the code is **247**

Steering wheel control: see Wiring diagrams Technical Note, vehicle, code **325**

Aerial: see Wiring diagrams Technical Note, vehicle, code **886**

GETtheMANUALS.org

The self-test procedure mode of the previous generation radios (PN0-6) allows certain main functions to be tested:

- by pressing buttons 2 and 4 at the same time, the speakers can be tested. They are supplied one by one; the display enables the connections and signals from each speaker to be checked,
- by pressing buttons 1 and 6 at the same time, the reception level can be tested (after frequency is displayed),
  - 9 or letter: good reception,
  - less than 3: poor reception,
  - if 2: total loss of stereo.

The self-test procedure mode of the new generation radios (NR4/5) enables certain main functions to be tested using the combination of buttons 1, 6 and i. The messages will be displayed in the following way:

- **Radio pre-code displays one letter and 3 digits to avoid removal of the radio**,
- speaker test with two bleeps (bass - treble) from the speakers, with the tested speakers shown on the display (front left-hand H01, front right-hand H02, rear right-hand H03, rear left-hand H04),
- displays the frequencies and levels of the tuner sensors,
- software version displayed, displays fault finding for the connected aerial if the aerial is supplied by a coaxial cable; in this case, the display shows H15 with X = 0, 1 or 2 depending on the aerial status (0: open circuit, 1: short circuit to earth, 2: power consumption),
- audio test loudness OFF (H08), cuts any loudness for an audio test.

Note:
Also displays source use time and total time in 10 minute slots (Tuner (H09)/CD (H10)/cassette (H11)/CD changer (H12)/auxiliary (13)/MP (H14)/Total (H15)).

GETtheMANUALS.org

THE RADIO BEEPS APPROXIMATELY EVERY 2 SECONDS	ALP 1
THE RADIO DOES NOT WORK (NO SOUND) WHEN THE RADIO ON BUTTON IS PRESSED	ALP 2
THE RADIO DOES NOT SWITCH ON AUTOMATICALLY WHEN + ACCESSORIES FEED IS SWITCHED ON OR SWITCHES OFF AFTER 20 MINUTES	ALP 3
THE RADIO IS SWITCHED ON, BUT THE DISPLAY AND SATELLITE CONTROLS DO NOT WORK	ALP 4
THE PLANET WHEEL CONTROLS DO NOT WORK	ALP 5
RADIO RECEPTION FAULTS	ALP 6
THE VOLUME DOES NOT INCREASE WITH THE VEHICLE SPEED	ALP 7
LIGHTING DOES NOT CHANGE WHEN THE VEHICLE LIGHTS ARE SWITCHED ON	ALP 8
NO SOUND CUT-OUT DURING CARMINAT OR HANDS-FREE KIT MESSAGES	ALP 9
THE INFRARED REMOTE CONTROL DOES NOT WORK	ALP 10

GETtheMANUALS.org

ALP 1	The radio beeps approximately every 2 seconds

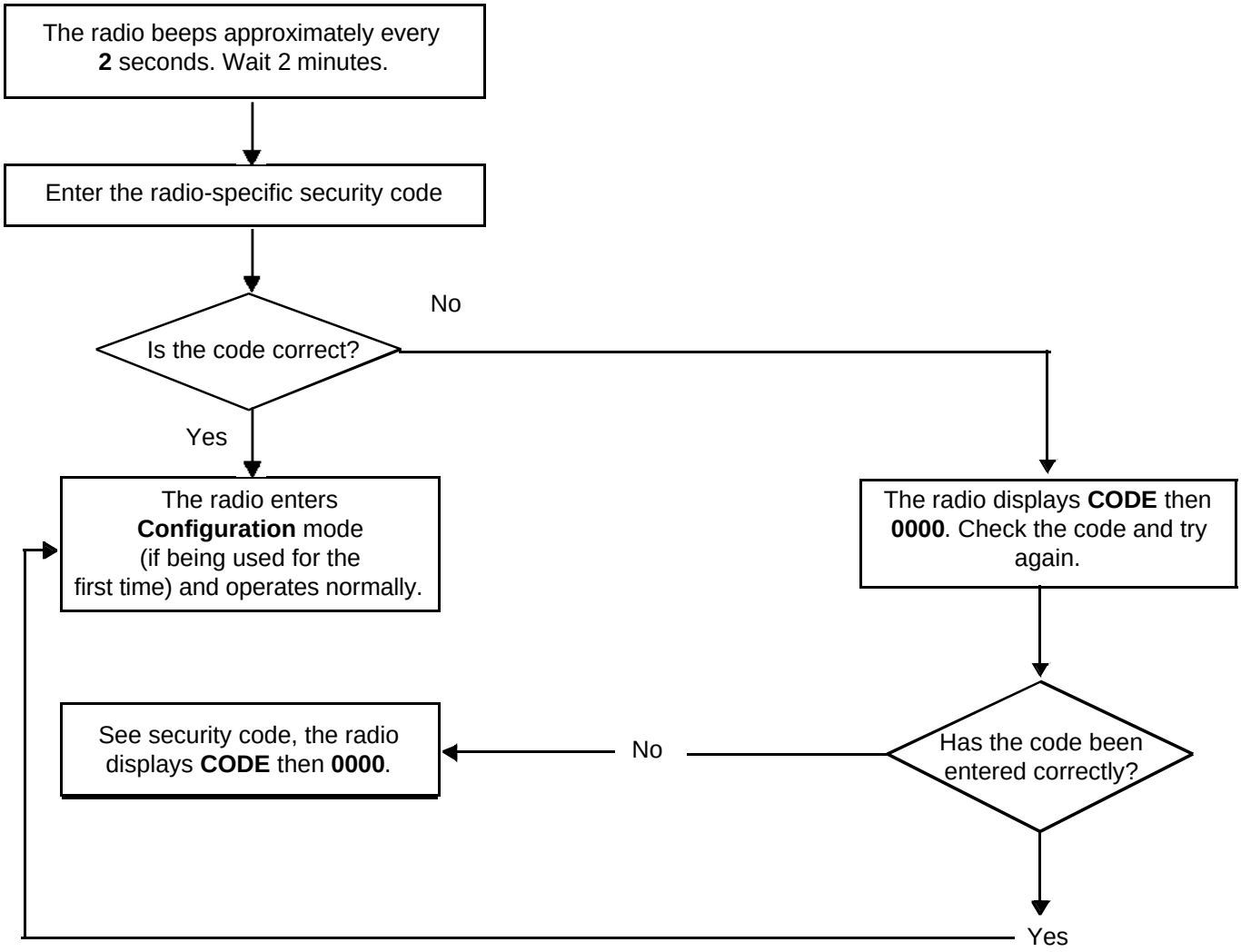

GETtheMANUALS.org

ALP 2	The radio does not operate when the ON button is pressed

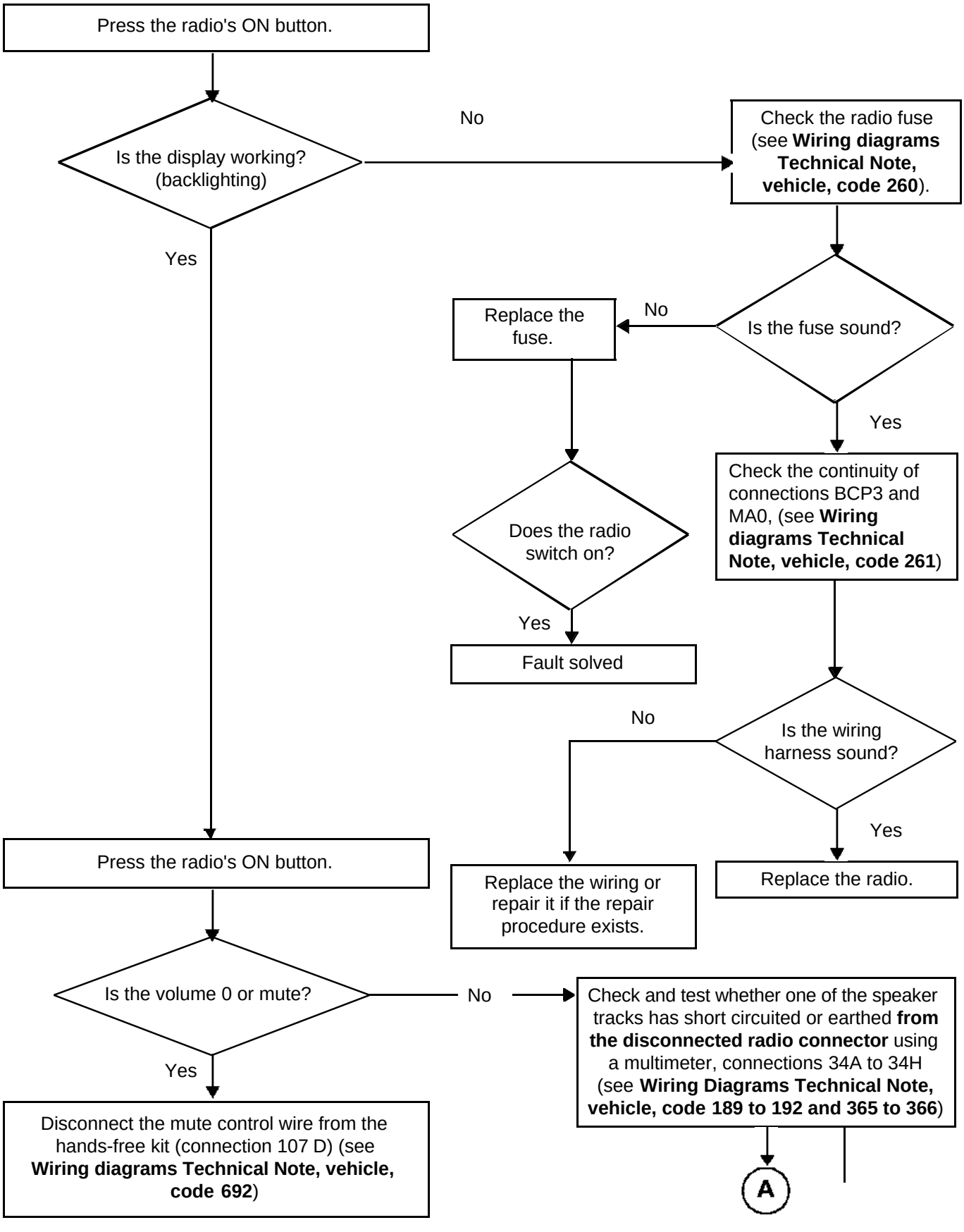

GETtheMANUALS.org

ALP 2 CONTINUED	

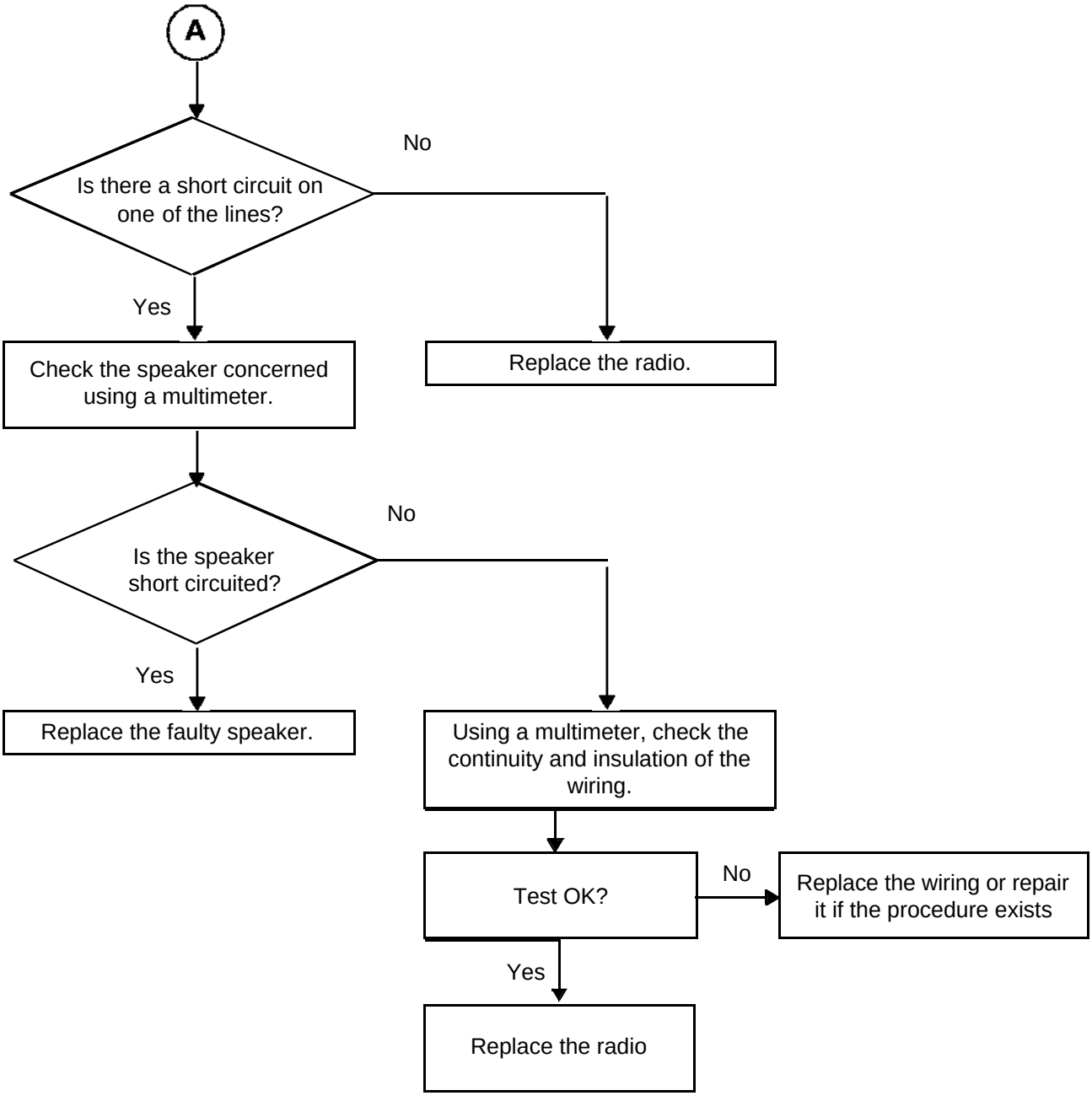

GETtheMANUALS.org

ALP 3	The radio does not switch on automatically or switches off after 20 minutes

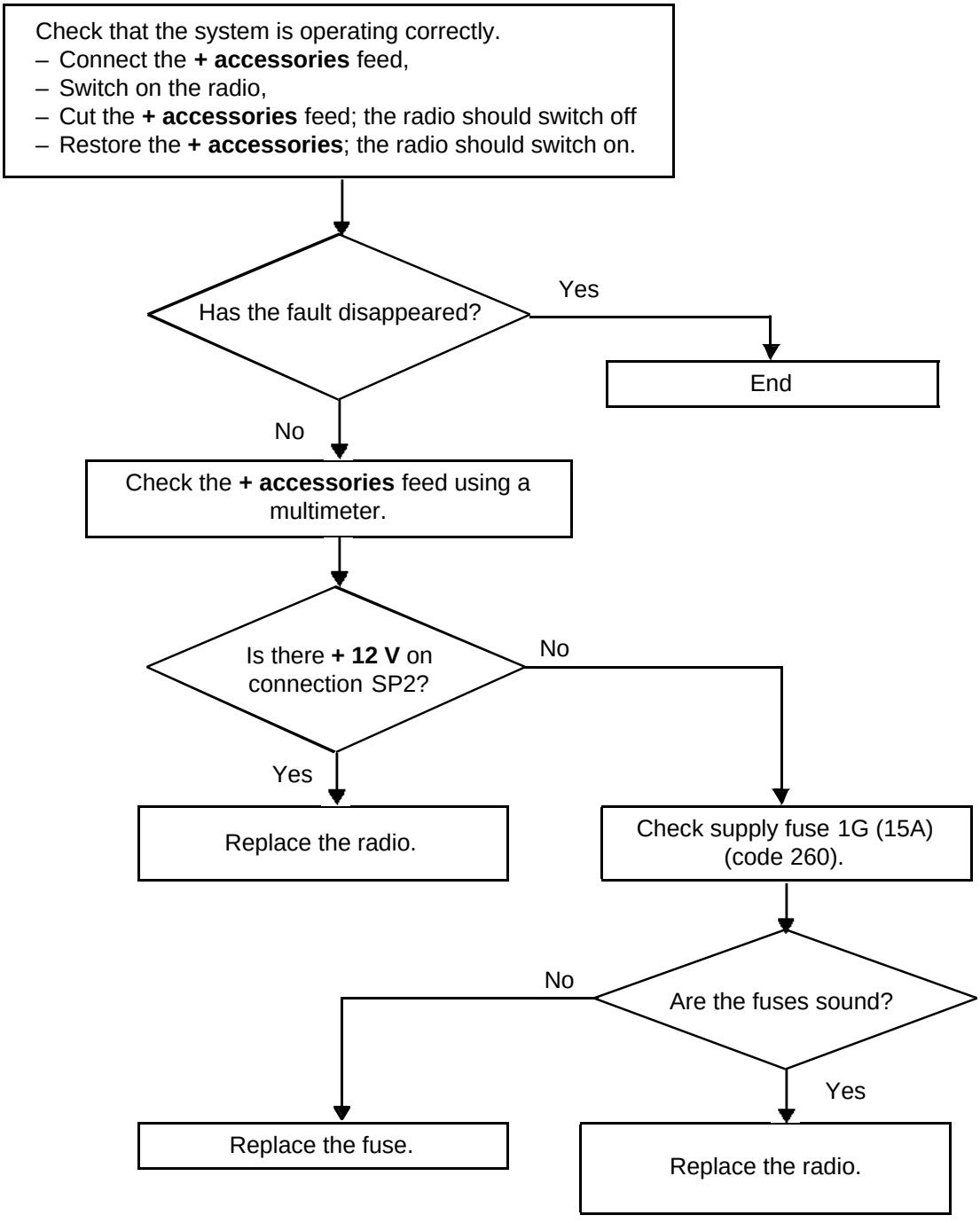

GETtheMANUALS.org

EXCEPT ESPACE IV, SCENIC II

ALP 4	**The radio is switched on, but the display and control satellite do not operate**

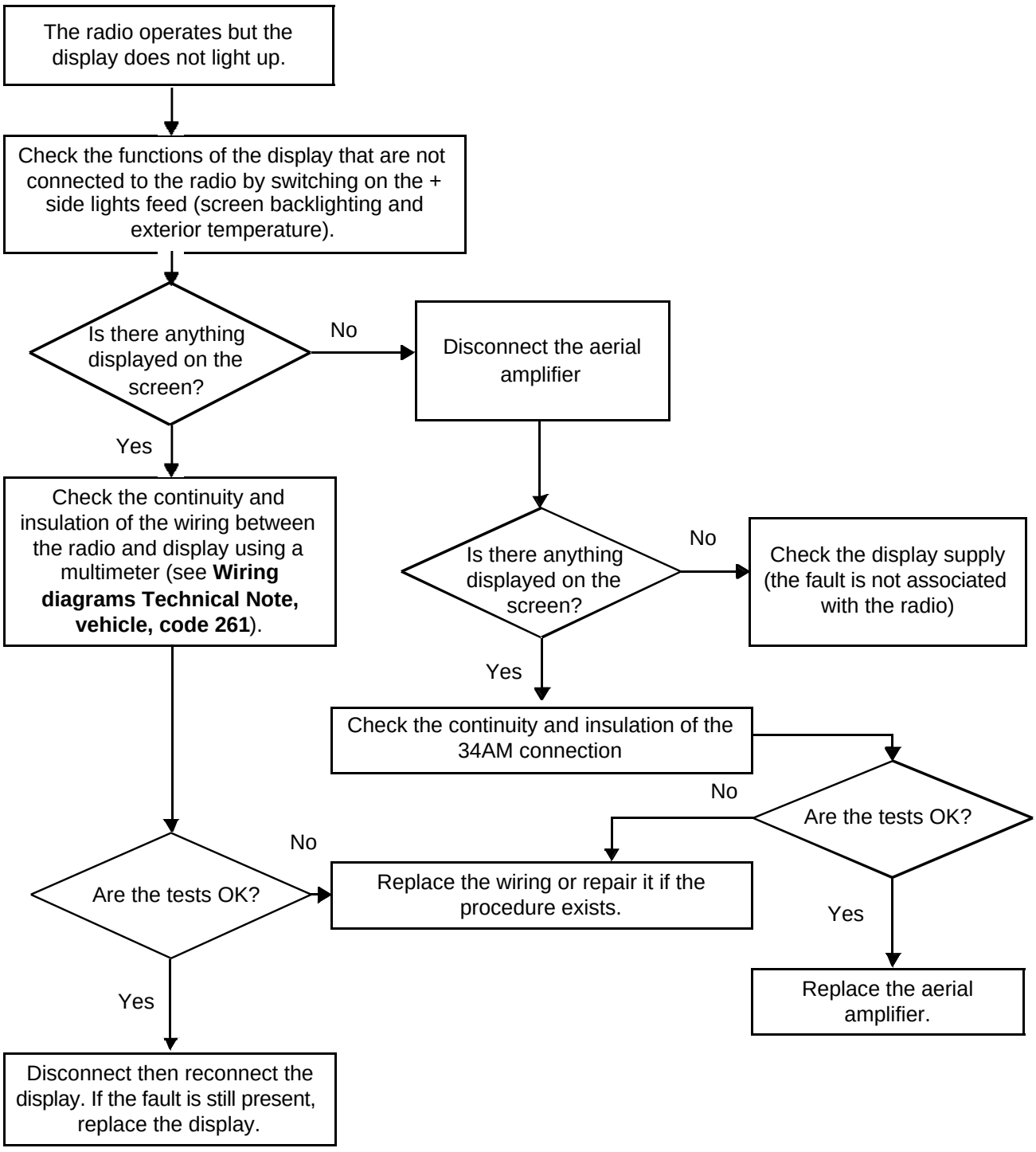

GETtheMANUALS.org

ESPACE IV, SCENIC II

ALP 4	The radio is switched on, but the display and control satellite do not operate

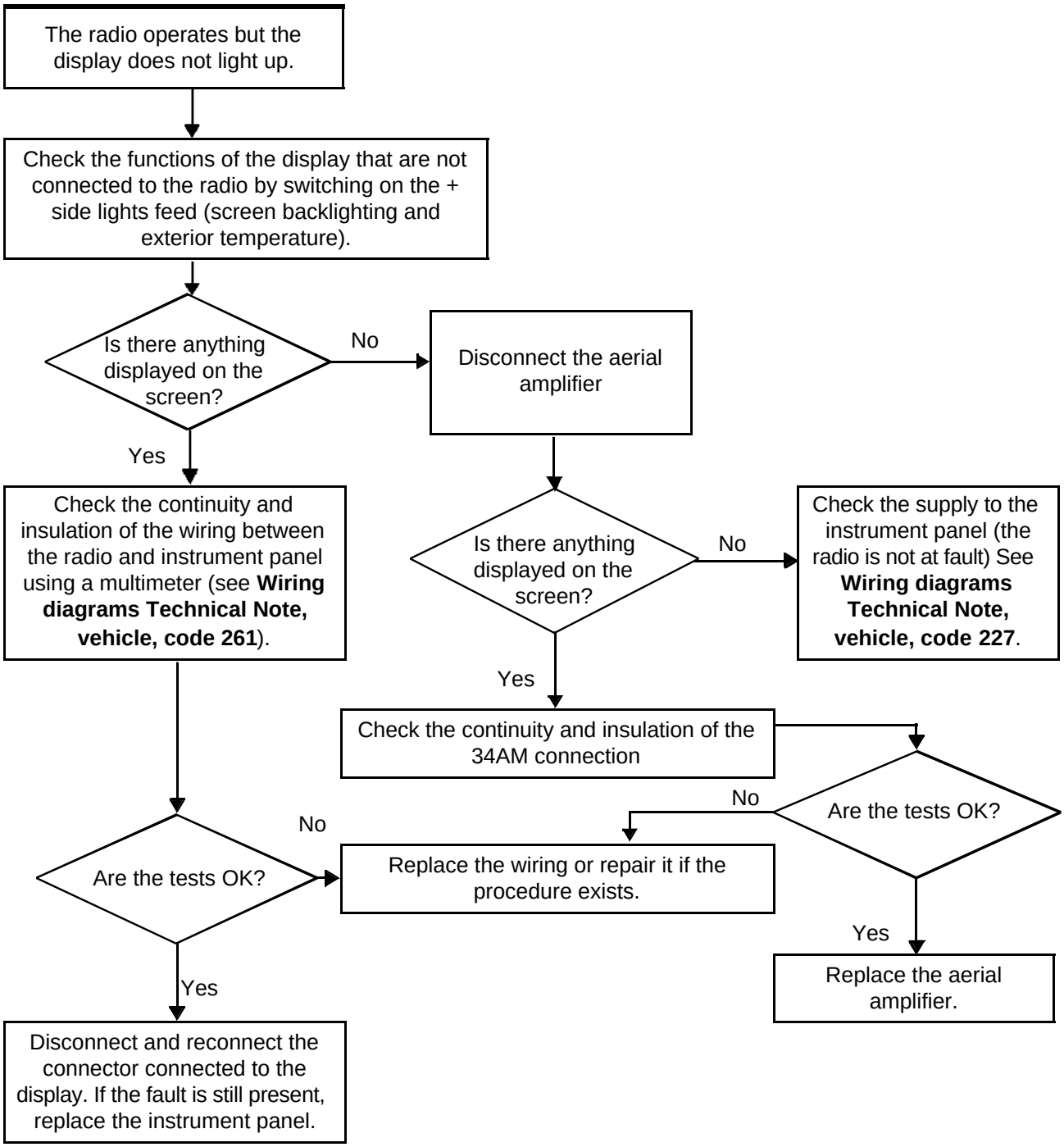

GETtheMANUALS.org

ALP 5	The satellite controls do not work

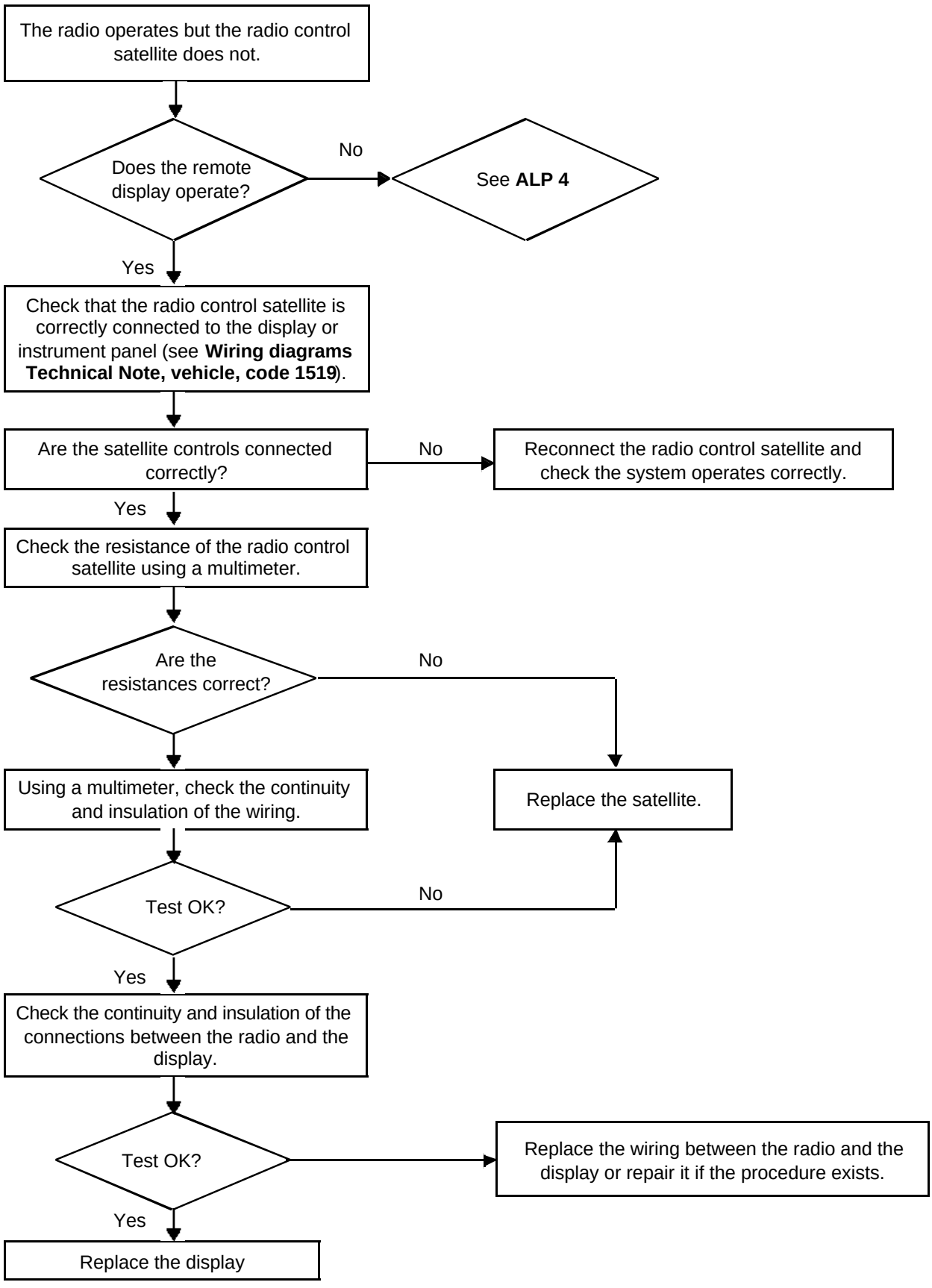

GETtheMANUALS.org

ALP 6	Radio reception faults

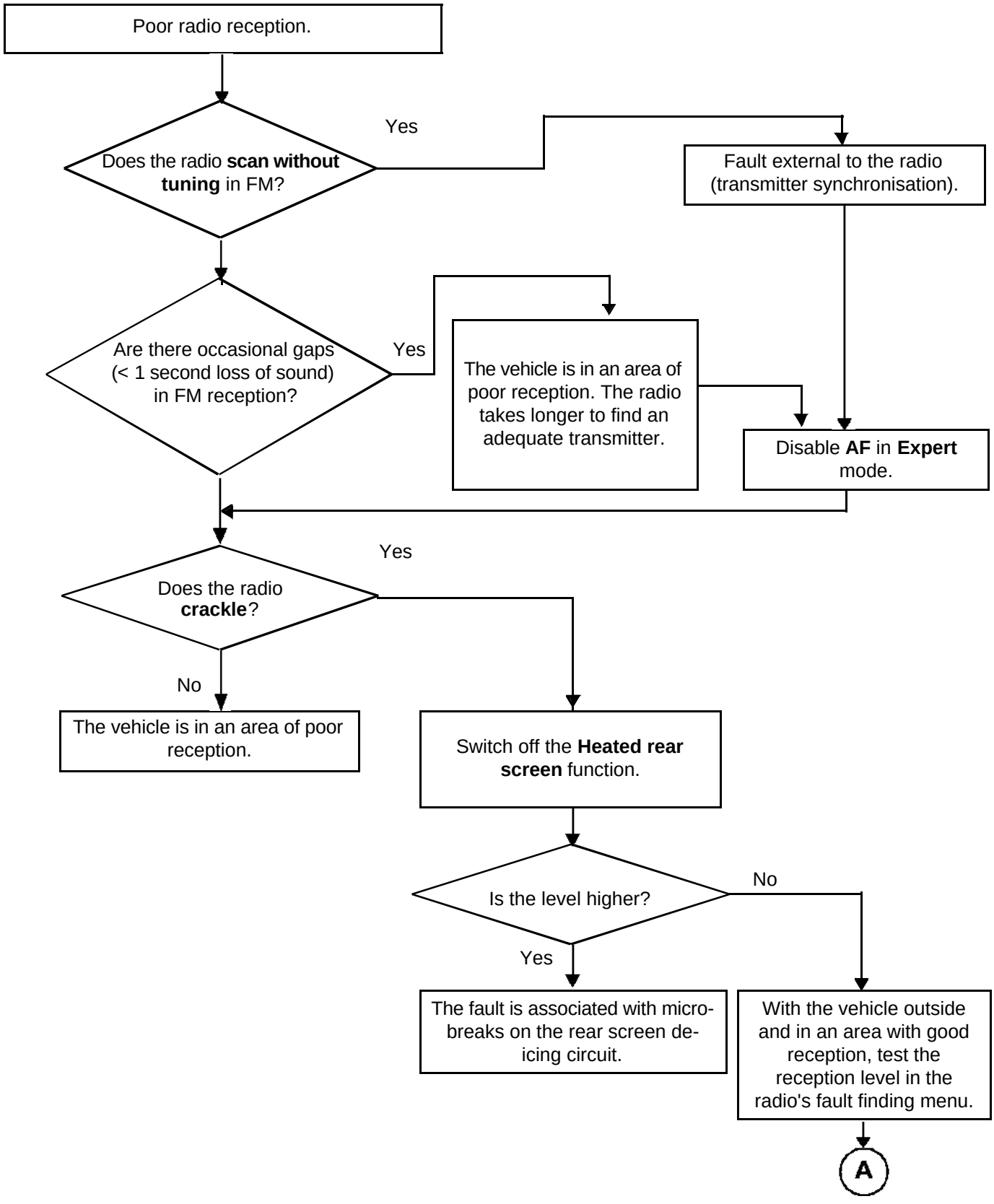

GETtheMANUALS.org

ALP 6 CONTINUED 1	

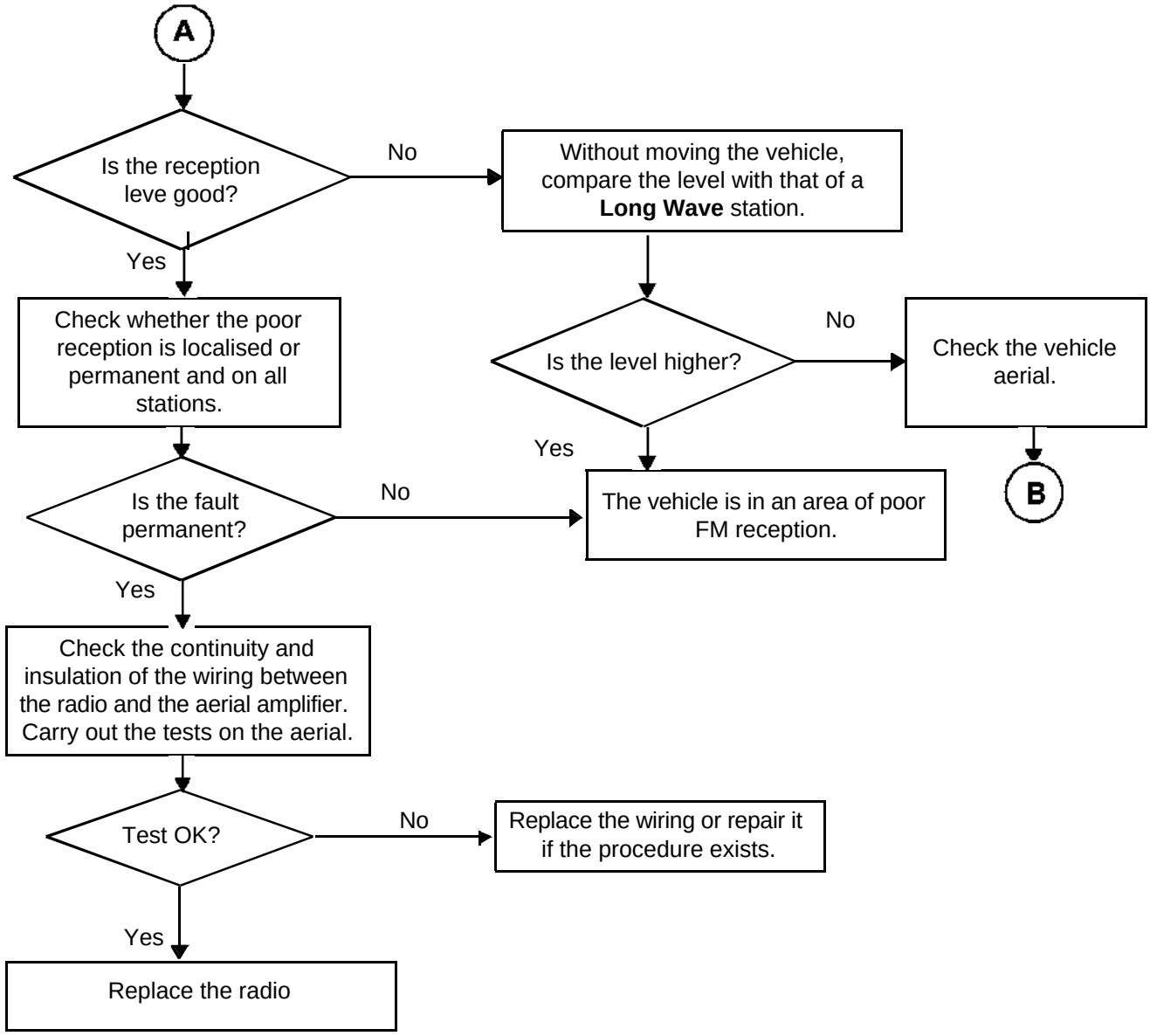

GETtheMANUALS.org

ALP 6 CONTINUED 2	

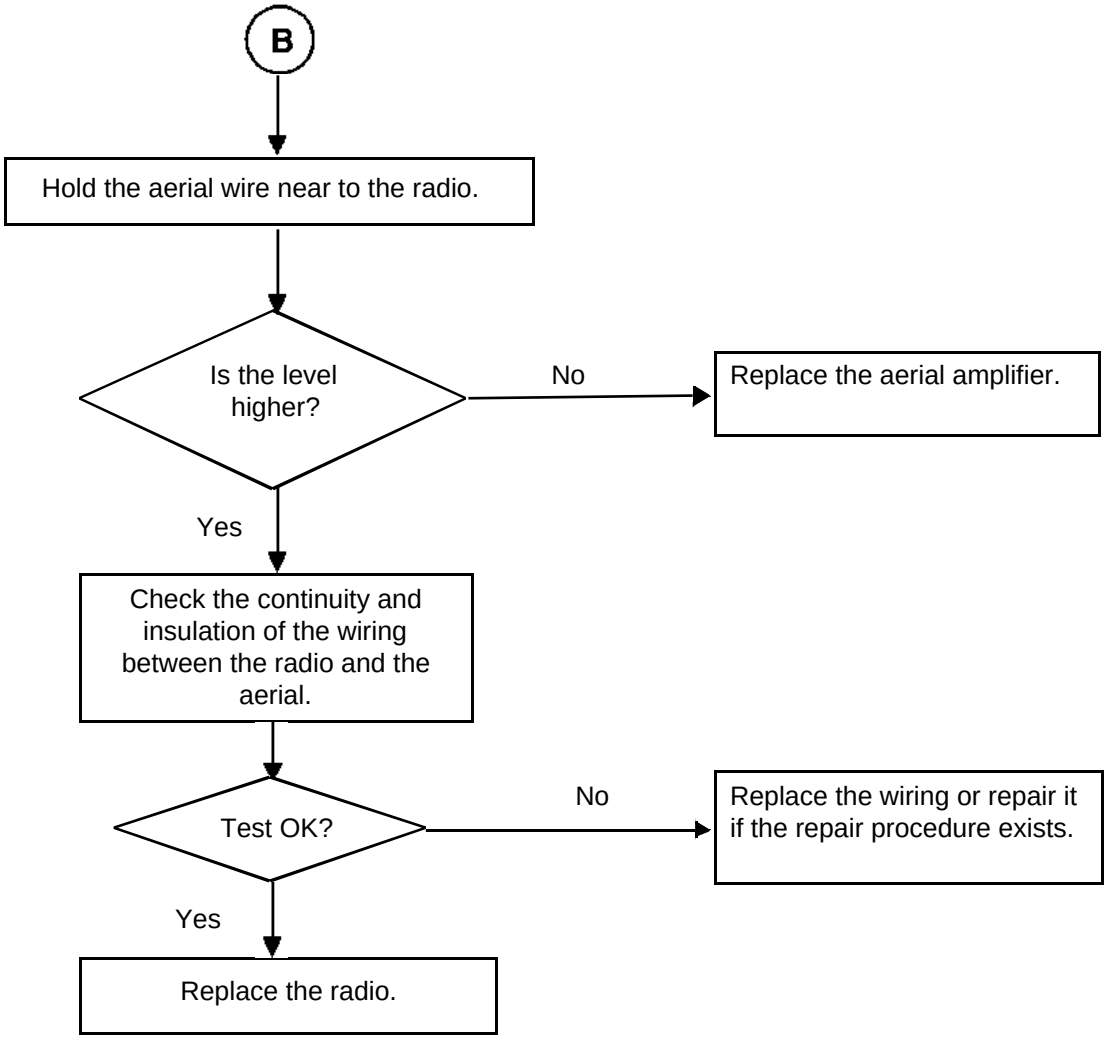

GETtheMANUALS.org

ALP 7	**The volume does not increase with the vehicle speed**.

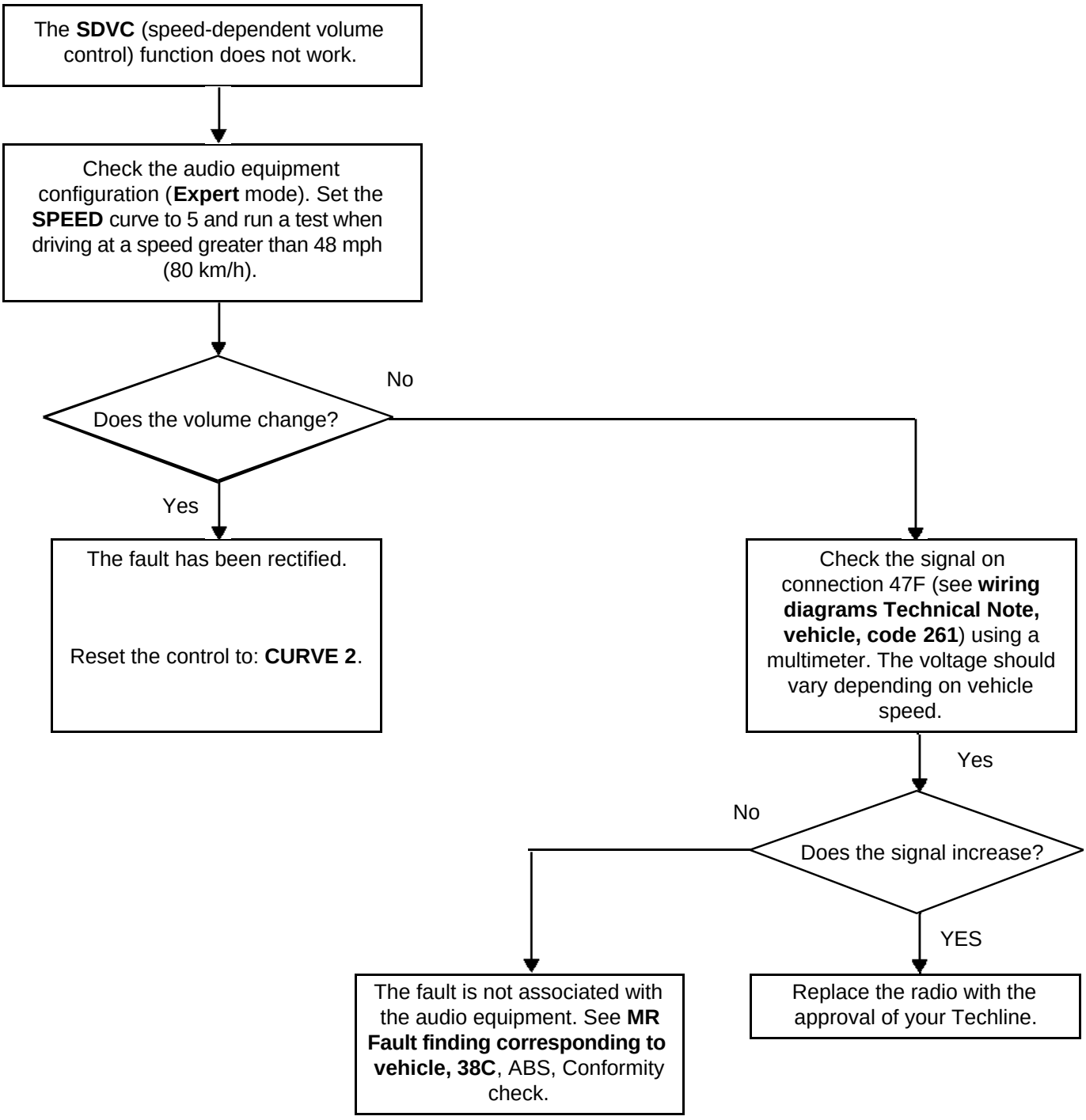

GETtheMANUALS.org

ALP 8	Lighting does not change when the vehicle lights are switched on

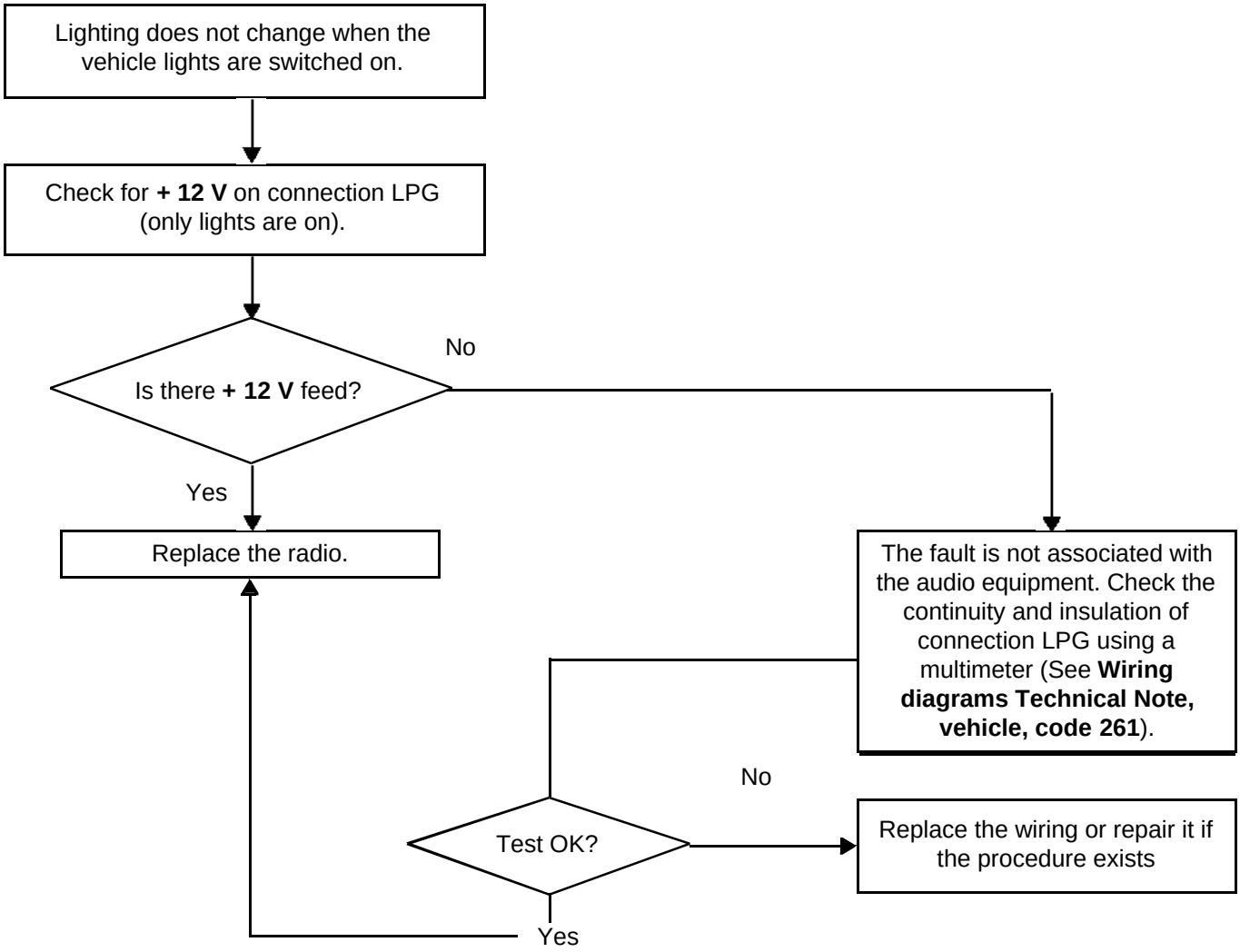

GETtheMANUALS.org

ALP 9	No sound muting during Carminat messages, voice synthesiser or hands-free kit

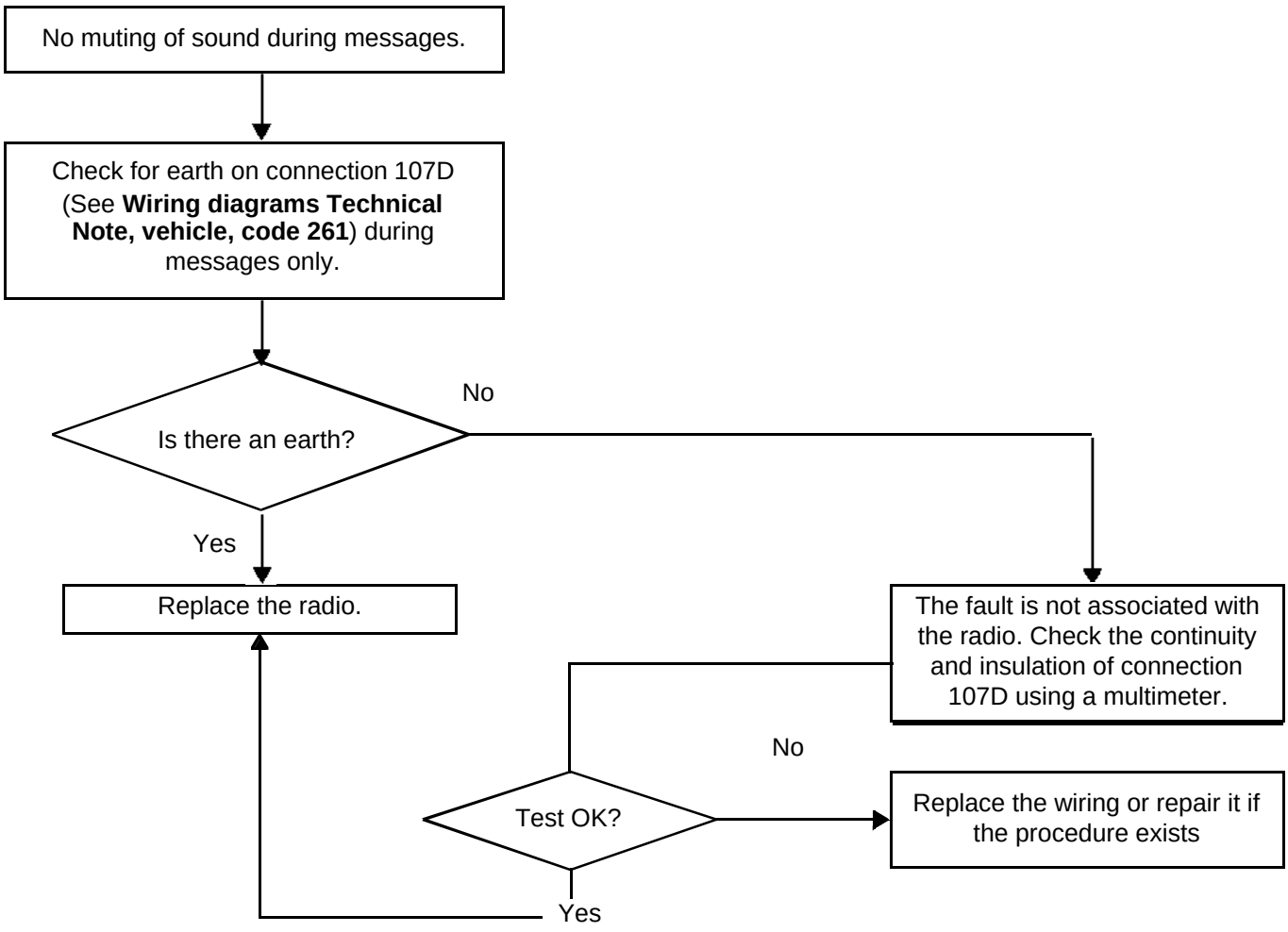

GETtheMANUALS.org

ALP 10	The infrared remote control does not operate (PN6)

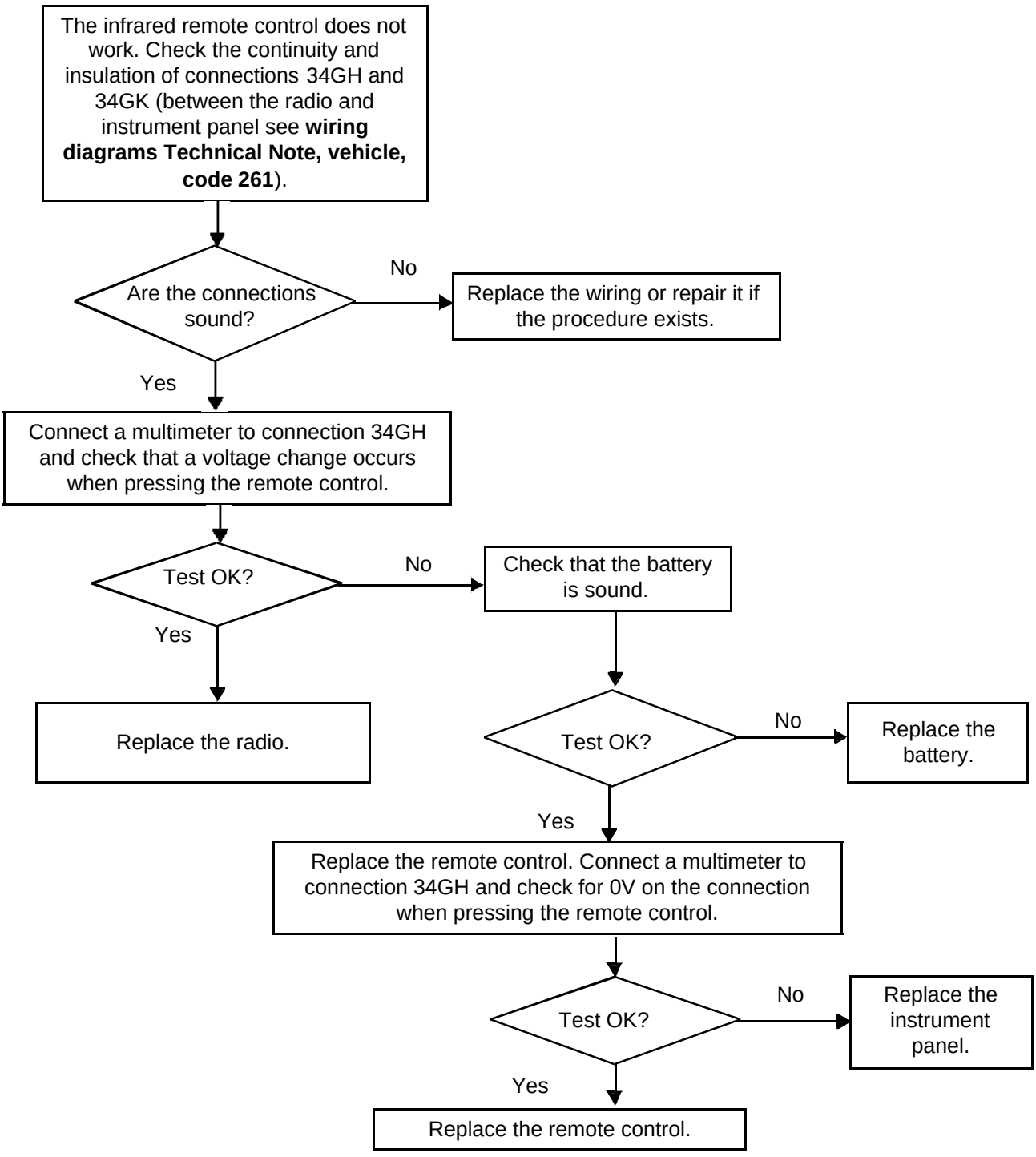

GETtheMANUALS.org

RADIO

First solution

If the electric ejector motor is operational, eject the CD using a **4.5 V** battery to supply the electric motor (**B**) (attach the + wire to contact (**1**) and the - wire to contact (**2**) when ejecting the CD).

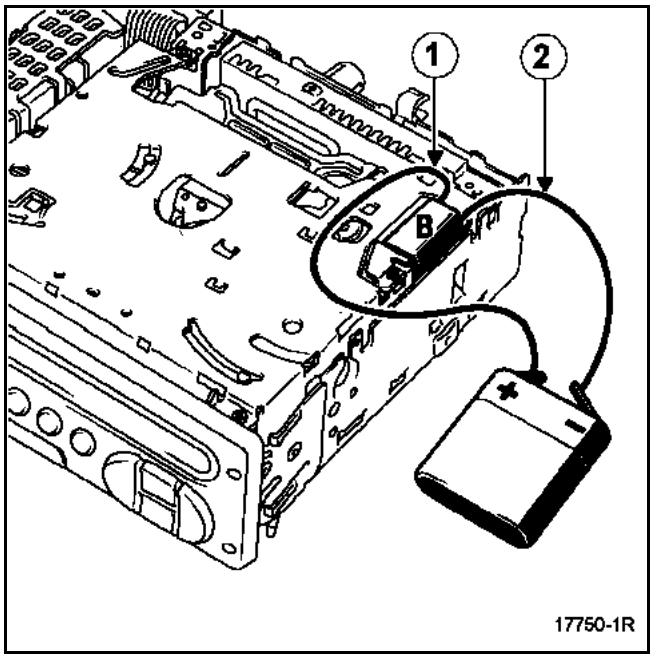

GETtheMANUALS.org

RADIO

Second solution

If the electric ejector motor is not operational, remove the bolt (**C**) and release the electric motor (**B**).

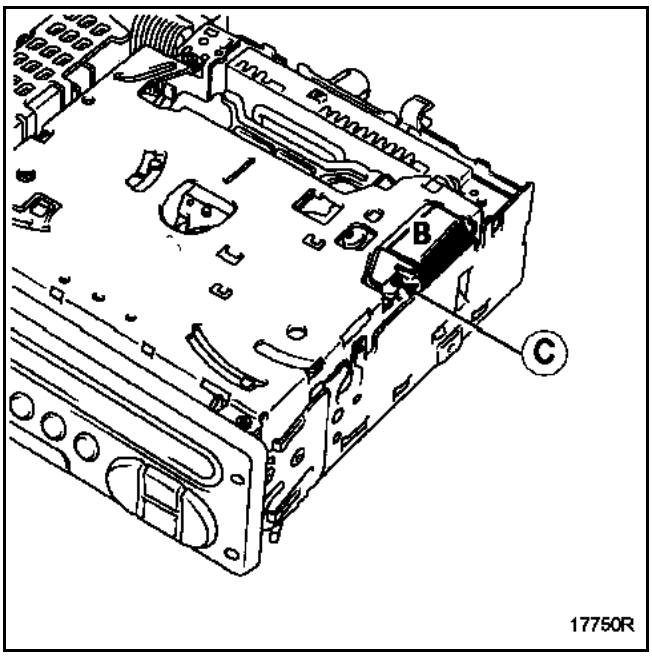

Turn toothed wheel (**D**) by hand in a clockwise direction until the CD is ejected.

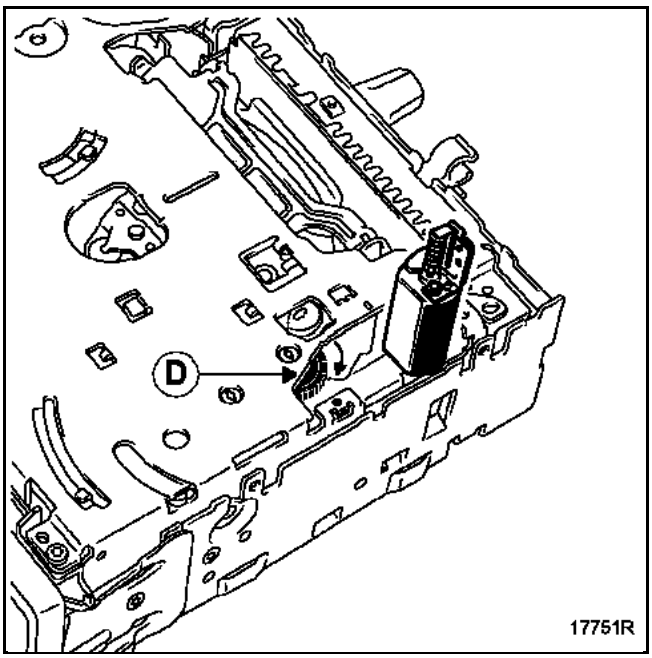

Before replacing the radio:

- refit the electric motor and attach it using the bolt (second solution only),
- refit the casing.

GETtheMANUALS.org

CHANGER IN THE DASHBOARD

REMOVAL

Remove the two bolts (**A**).

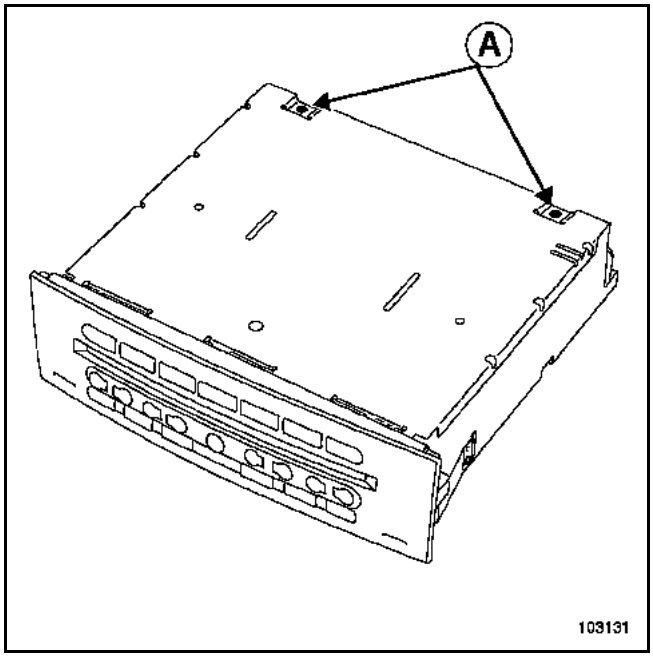

Turn the CD changer upside down.
Remove the 6 bolts (**B**).

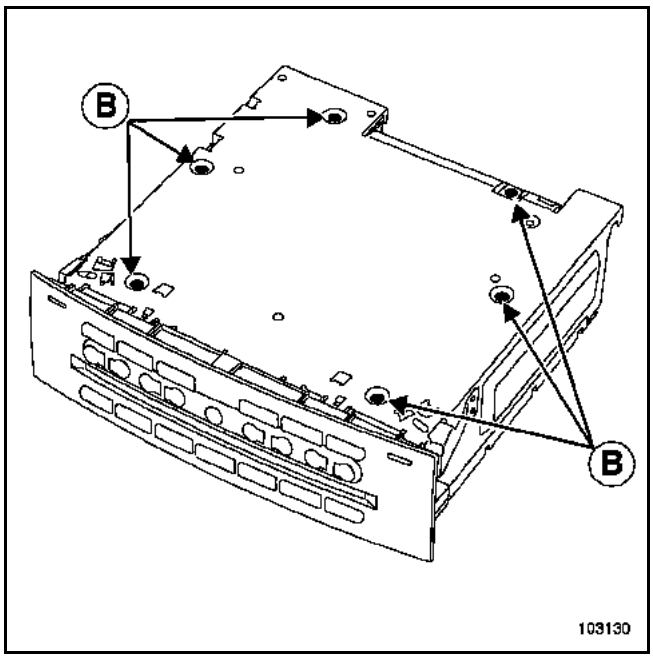

Turn the CD changer upside down.
Remove the cover.

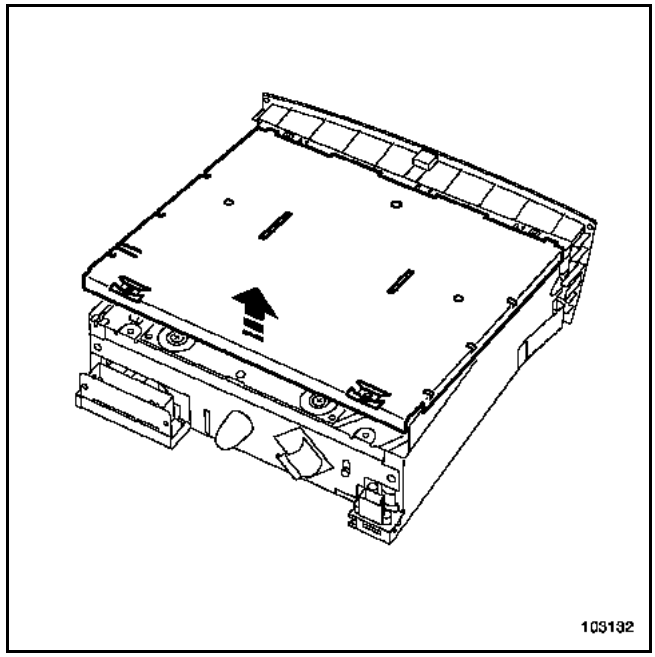

Remove the mechanism from its housing.

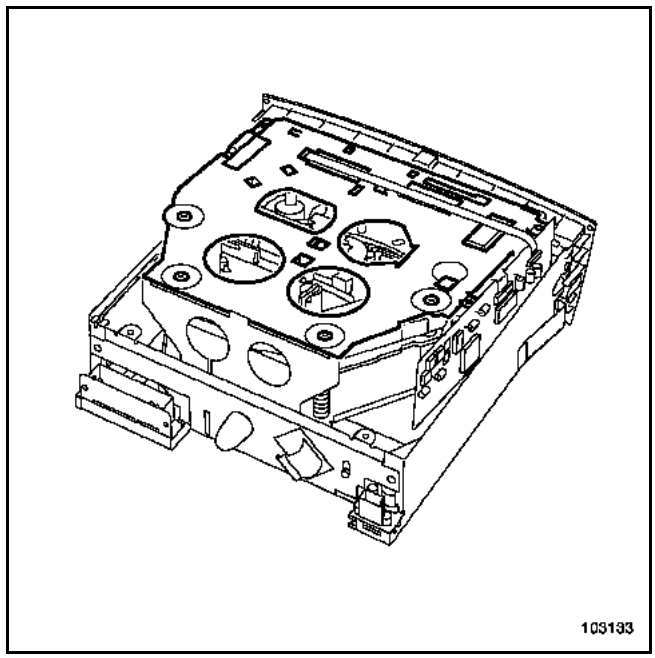

GETtheMANUALS.org

CHANGER IN THE DASHBOARD

Remove the two bolts (**C**).

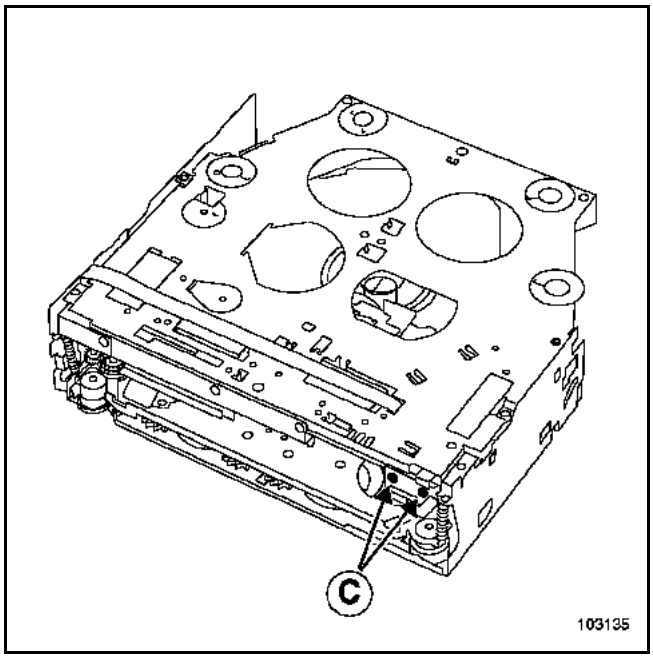

Remove the CD guide arm.
Disconnect connector (**D**).

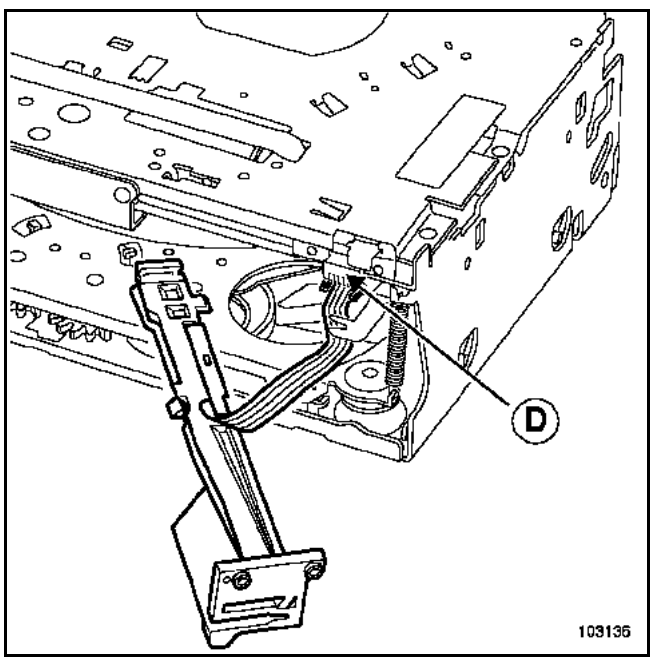

Remove the eight bolts (**E**),

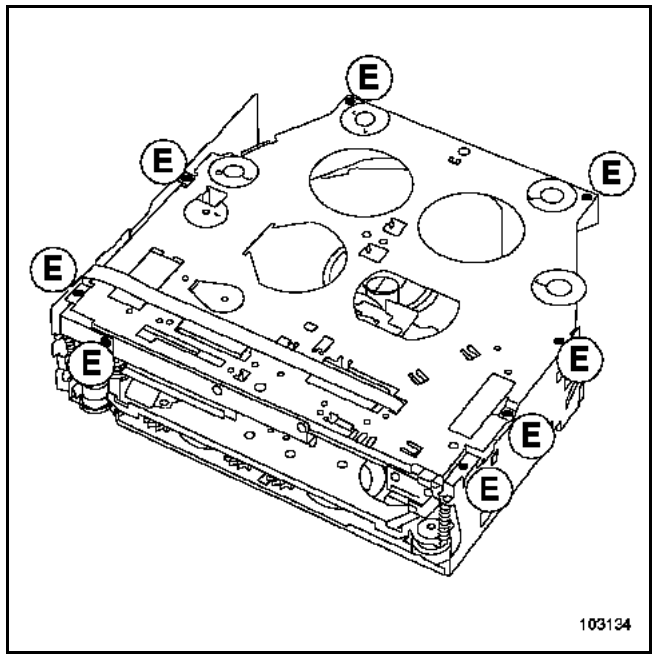

Remove both clips from the two connectors.

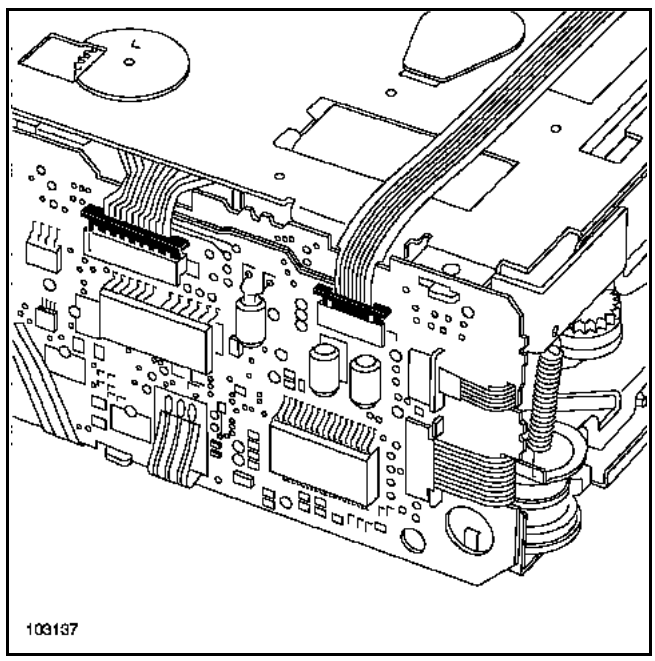

GETtheMANUALS.org

CHANGER IN THE DASHBOARD

Remove both ribbon cables.

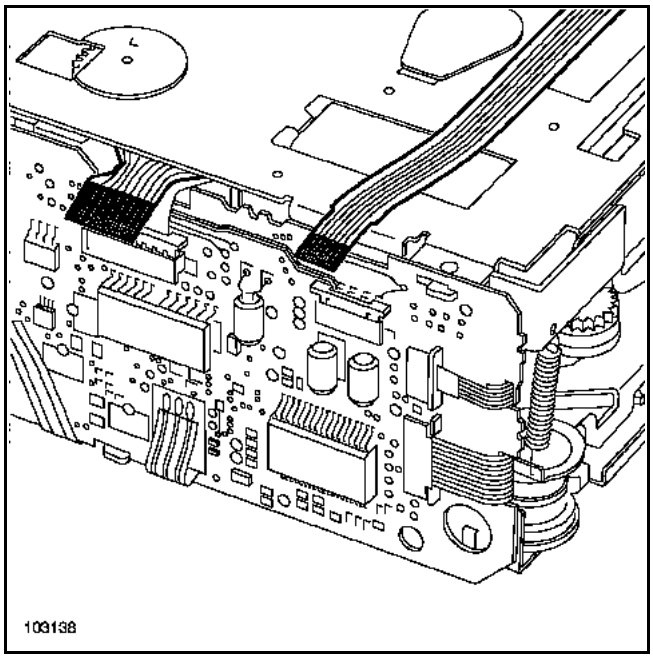

Remove the upper section of mechanism.

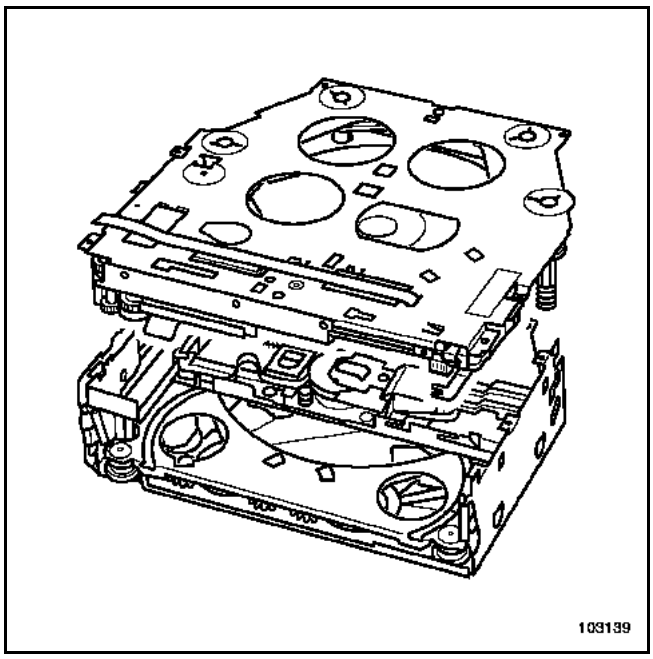

Turn the guides and push the mechanism as shown in the diagram in order to raise or lower the CDs.

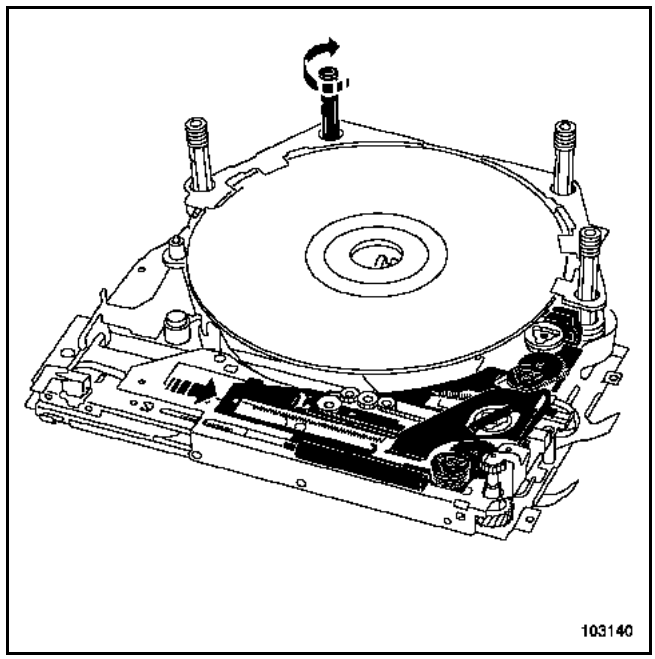

The CDs can now be accessed.

IMPORTANT
Never refit the changer mechanism once it has been removed.

GETtheMANUALS.org

CHANGER IN THE BOOT

Remove:
– the three bolts (**1**) located underneath the unit,

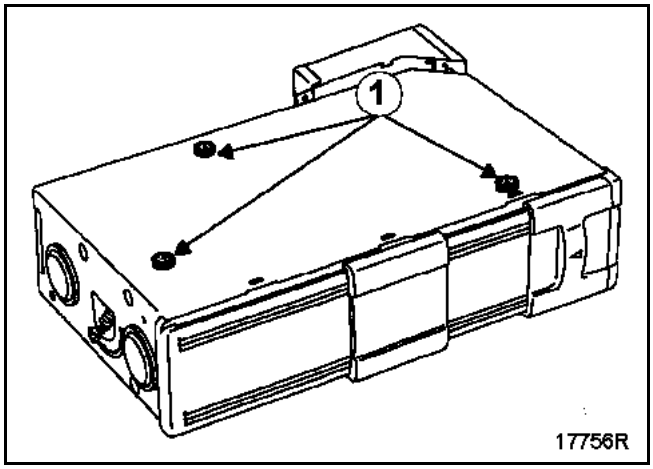

– the two springs (**2**) after bringing them to the upper position,

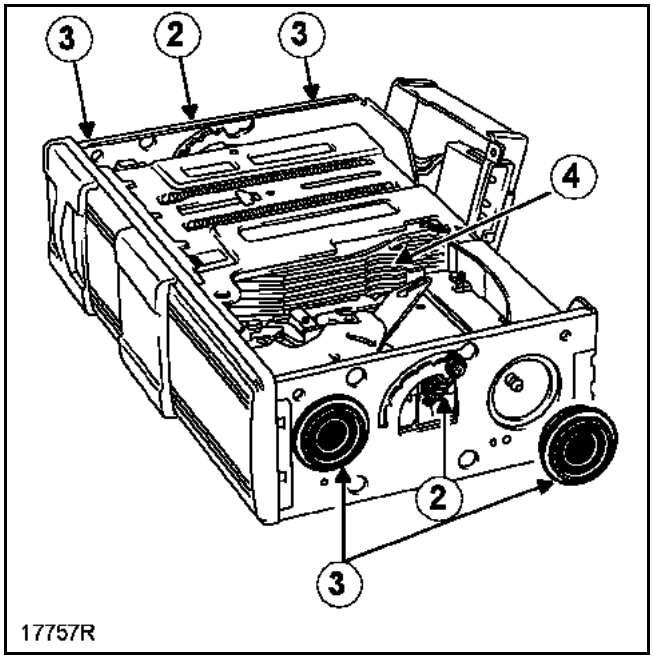

– the four dampers (**3**) (clipped on).

Remove the electronic module from the mounting and place it to the side.

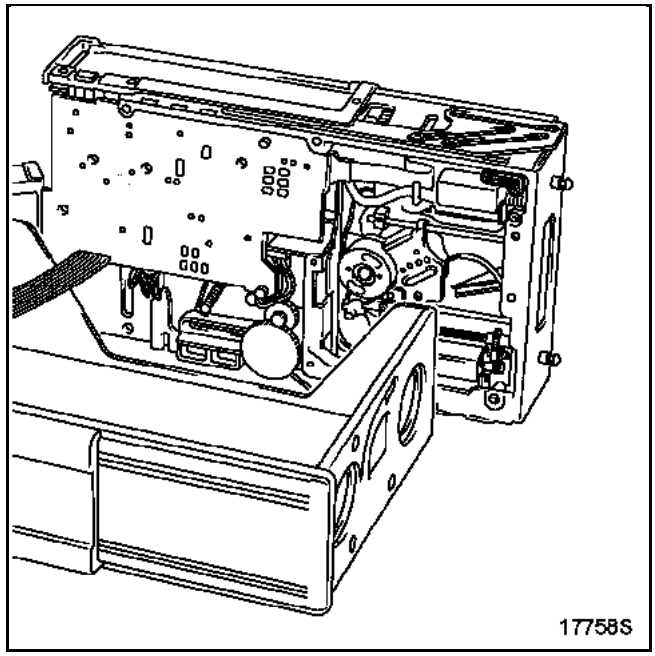

First solution

If the electric motors are operating:

1 Reinsert the CD and its drawer into the changer (**4**) using a 4.5 V battery to supply the electric motor (**3**), (attach the + wire to contact (**1**) and the - wire to contact (**2**)).
2 Eject the changer by moving lever (**4**).

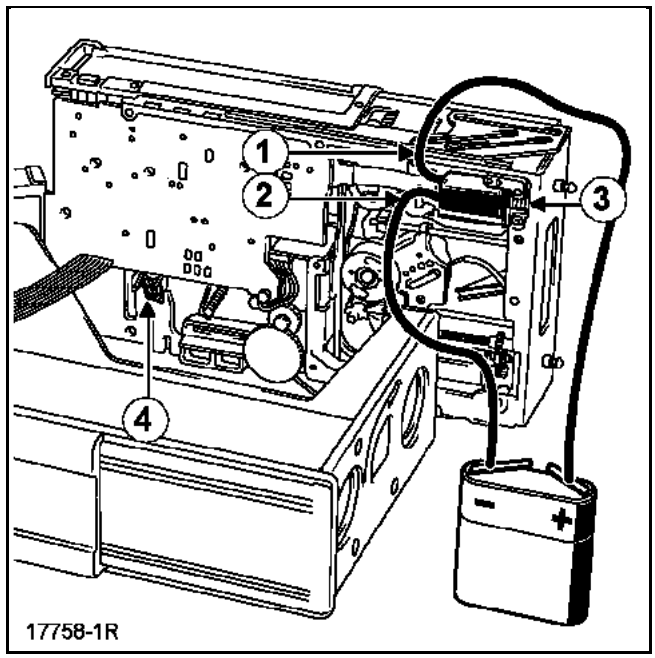

GETtheMANUALS.org

CHANGER IN THE BOOT

Second solution

If the electric motors are not operational:

1 To reinsert the CD and its drawer into changer (**5**), remove the pinion mounting (**6**) by its bolt,

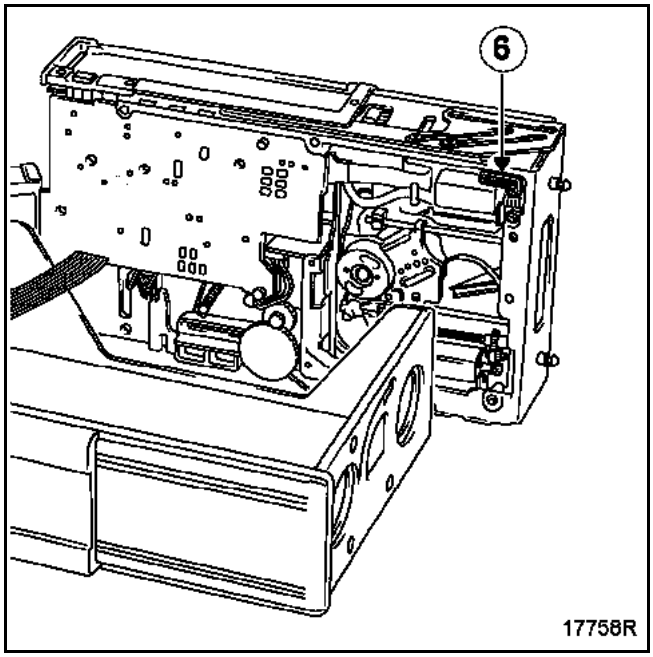

turn the toothed wheel (**7**) by hand in an anticlockwise direction until the drawer is turned completely upside down in the changer (**5**).

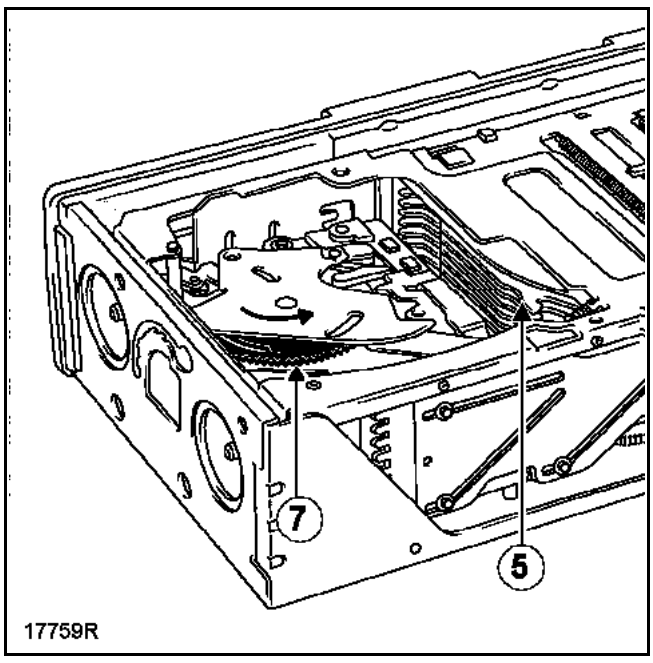

2 Eject the CD changer by moving the lever (**8**).

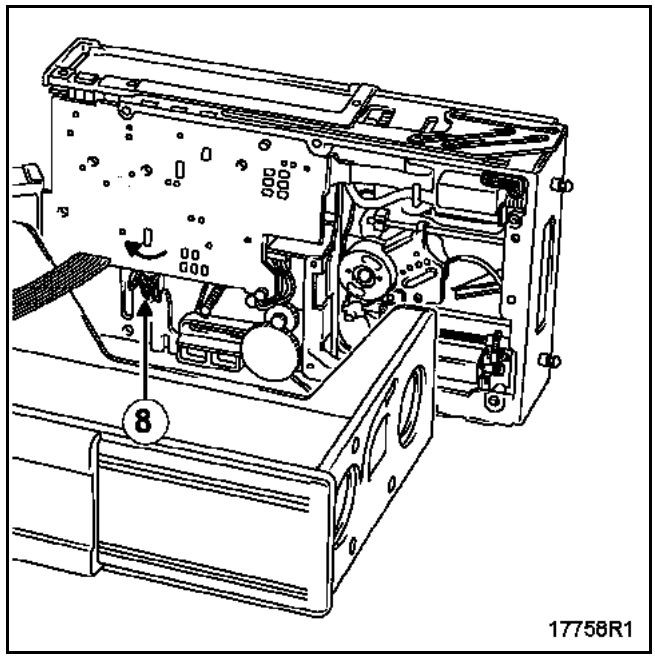

Before replacing the radio:

- refit the module in its unit, replace the four dampers and the two springs,
- attach the module to the unit using the three bolts,
- re-close the changer, attach its cover and refit the rear section.

GETtheMANUALS.org

VEL SATIS

8 Electrical equipment

86B CAR PHONE

Vdiag No: 04

Fault finding - Introduction	86B - 2
Fault finding - System operation	86B - 7
Fault finding - Allocation of computer tracks	86B - 10
Fault finding - Replacement of components	86B - 13
Fault finding - Configurations and programming	86B - 14
Fault finding - Fault summary table	86B - 15
Fault finding - Interpretation of faults	86B - 16
Fault finding - Conformity check	86B - 32
Fault finding - Status summary table	86B - 36
Fault finding - Interpretation of statuses	86B - 37
Fault finding - Parameter summary table	86B - 51
Fault finding - Interpretation of parameters	86B - 52
Fault finding - Command summary table	86B - 55
Fault finding - Interpretation of commands	86B - 56
Fault finding - Customer complaints	86B - 65
Fault finding - Fault finding charts (ALPs)	86B - 66

V2 **Edition Anglaise**

"The repair procedures given by the manufacturer in this document are based on the technical specifications current when it was prepared.

The procedures may be modified as a result of changes introduced by the manufacturer in the production of the various component units and accessories from which his vehicles are constructed."

All rights reserved by Renault s.a.s.

Copying or translating, in part or in full, of this document or use of the service part reference numbering system is forbidden without the prior written authority of Renault s.a.s.

© Renault s.a.s.

GETtheMANUALS.org

1. SCOPE OF THIS DOCUMENT

This document presents the fault finding procedure applicable to all computers with the following specifications:

Vehicle(s): **Velsatis Phase 1 and 2** *Function concerned:* **Car phone**	*Name of computer:* **Integrated Hands-Free Phone** *Vdiag No.:* **04**

2. PREREQUISITES FOR FAULT FINDING

Documentation type

Fault finding procedures (this manual):
– Assisted fault finding (integrated into the diagnostic tool), Dialogys.
Wiring Diagrams:
– Visu-Schéma (CD-ROM), paper.

Type of diagnostic tools

– CLIP

Special tooling required

Special tooling required	
	Multimeter
Elé. 1681	Computer connection bornier
Elé. 1737	Test adapter

3. RECAP

Procedure

To save energy, the Velsatis Phase 1 and 2 UCH interrupts the + after ignition feed after 3 minutes have elapsed.

When performing fault finding on a computer, it is possible to force the + after ignition feed for 1 hour by applying the following procedure:
– Press the card unlocking button,
– insert the card in the reader,
– press the Start button (interrupting the timed + after ignition feed mode),
– press and hold the Start button for over 5 seconds until the engine immobiliser warning light starts to flash rapidly (4 Hz).

This forced + after ignition feed mode remains active for 1 hour.
Pressing the Start button or removing the card from the reader cuts off the forced + after ignition feed but does not cut off the timed forced + after ignition feed mode. As long as one hour has not elapsed the + after ignition feed function restarts the forced + after ignition feed for the remaining time.

GETtheMANUALS.org

Faults

Faults are declared as either present or stored (depending on whether they appeared in a certain context and have disappeared since, or whether they remain present but have not been diagnosed within the current context).

The **present** or **stored** status of faults should be taken into consideration when the diagnostic tool is switched on after the + after ignition feed (without any system components being active).

For a **present fault**, apply the procedure described in the **Interpretation of faults** section.

For a **stored fault**, note the faults displayed and apply the instructions in the **Notes** section.

If the fault is **confirmed** when the instructions in the Notes section are applied, the fault is present. Deal with the fault

If the fault is **not confirmed**, check:
- the electrical lines which correspond to the fault,
- the connectors for these lines (for oxidation, bent pins, etc.),
- the resistance of the component detected as faulty,
- the condition of the wires (melted or split insulation, wear).

Conformity check

The aim of the conformity check is to check data that does not produce a fault on the diagnostic tool because the data is inconsistent. Therefore, this stage is used to:
- carry out fault finding on faults that do not have a fault display, and which may correspond to a customer complaint.
- check that the system is operating correctly and that there is no risk of a fault recurring after repairs.

This section gives the fault finding procedures for statuses and parameters and the conditions for checking them.

If a status is not behaving normally or a parameter is outside the permitted tolerance values, consult the corresponding fault finding page.

Customer complaints - Fault finding chart

If the test with the diagnostic tool is OK but the customer complaint is still present, the fault should be processed by **customer complaint**.

A synopsis of the general procedure to follow is provided on the following page in the form of a flow chart.

GETtheMANUALS.org

4. FAULT FINDING PROCEDURE

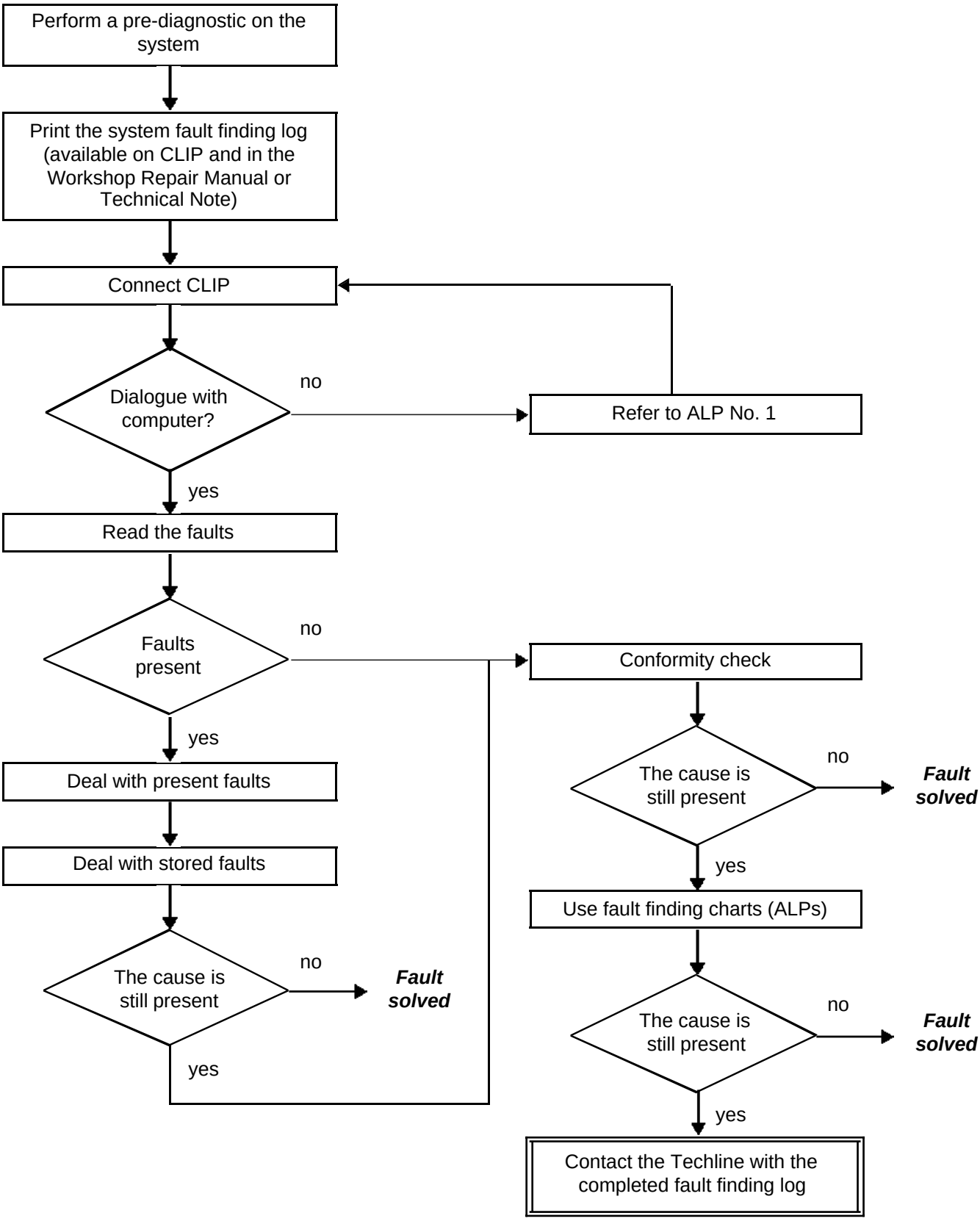

GETtheMANUALS.org

4. FAULT FINDING PROCEDURE (continued)

Wiring check

Fault finding problems
Disconnecting the connectors and/or manipulating the wiring harness may temporarily remove the cause of a fault.
Electrical measurements of voltage, resistance and insulation are generally correct, especially if the fault is not present when the analysis is made (stored fault).

Visual inspection
Look for damage under the bonnet and in the passenger compartment.
Carefully check the fuses, insulators and wiring harness routing.
Look for signs of oxidation.

Tactile inspection
While manipulating the wiring harness, use the diagnostic tool to note any change in fault status from stored to present.
Make sure that the connectors are properly locked.
Apply light pressure to the connectors.
Twist the wiring harness.
If there is a change in status, try to locate the source of the fault.

Inspection of each component
Disconnect the connectors and check the appearance of the clips and tabs, as well as the crimping (no crimping on the insulating section).
Make sure that the clips and tabs are properly locked in the sockets.
Check that no clips or tabs have been dislodged during connection.
Check the clip contact pressure using an appropriate model of tab.

Continuity and insulation check
Check the continuity of entire lines, then section by section.
Look for a short circuit to earth, to **+ 12 V** or to another wire.

If a fault is detected, repair or replace the wiring harness.

GETtheMANUALS.org

5. FAULT FINDING LOG

IMPORTANT

IMPORTANT
Any fault on a complex system requires thorough fault finding with the appropriate tools. The FAULT FINDING LOG, which should be completed during the procedure, enables you to keep track of the procedure which is carried out. It is an essential document when consulting the manufacturer.

IT IS THEREFORE MANDATORY TO FILL OUT A FAULT FINDING LOG EACH TIME FAULT FINDING IS CARRIED OUT.

You will always be asked for this log:

- when requesting technical assistance from Techline,
- for approval requests when replacing parts for which approval is mandatory,
- to be attached to monitored parts for which reimbursement is requested. The log is needed for warranty reimbursement, and enables better analysis of the parts removed.

6. SAFETY ADVICE

Safety rules must be observed during any work on a component to prevent any damage or injury:
– check the battery voltage to avoid incorrect operation of computer functions,
– Use the proper tools.

GETtheMANUALS.org

WARNING
Only use this fault finding manual if the vehicle is not fitted with a Carminat navigation and communication system.
Fault finding is performed on the Hands-Free Telephone integrated Control system using the telephone icon on the diagnostic tool desktop
This application must never be opened at the same time as the CLIP application (RENAULT icon) and inversely, never open the CLIP application (RENAULT icon) at the same time as the Hands-Free Kit (HFK) fault finding.

Note:
The **Integrated Hands-Free Telephone** system is also called the **M**odified **H**ands **F**ree **K**it (HFK).

FUNCTIONS CARRIED OUT BY THE HANDS-FREE KIT:

The **H**ands **F**ree **K**it system allows the customer to use their telephone in hands-free mode (without holding the telephone).
The customer can use their telephone in two ways: with the radio satellite control buttons or with the voice recognition mode (if configured: see **Configurations and programming**).
For more information, consult the user manual for the **H**ands **F**ree **K**it.

The **H**ands **F**ree **K**it system is used for the following functions:
– to receive or make calls,
– to alter the volume of calls (by deleting echo and reducing unwanted noise),
– to scroll through the telephone functions (directory, calls received, etc.) using the satellite control or voice recognition,
– to display the telephone screen information on the vehicle display,
– to recharge the telephone battery (using the telephone cradle),
– to use the vehicle's aerial for improved call reception,
– to use the vehicle's speakers instead of the telephone's speaker,
– to switch the radio off when making or receiving calls.

GETtheMANUALS.org

CONTENTS OF THE HANDS-FREE KIT SYSTEM

The system is made up of the following components:
– a computer (**Hands-Free Kit**),
– a telephone cradle (telephone adapter) fitted onto the vehicle base plate,
– a vehicle base plate designed to hold the telephone cradle (i.e. the part fitted onto the base of the centre console),
– a microphone (between the sun visors),
– a call button (a button at the end of the indicator stalk),
– the customer's telephone (specific models: see Owner's Manual).

The system uses radio components on the vehicle:
– radio;
– satellite control under the steering wheel,
– display,
– vehicle speakers,
– radio aerial.

Note:
A test adapter (Elé. 1737) is used to check the conformity of serial and audio connections between the telephone cradle and the computer. This adapter is used with the **VP005 Series connections tests** and **VP006 Audio connections tests** commands (see interpretation of these commands).

GETtheMANUALS.org

SYSTEM DESCRIPTION

The Hands-Free Kit system allows the customer's mobile telephone resources to be used via the vehicle's multimedia equipment (Radio, Display, Satellite control, Microphone). The Velsatis Phase II Hands-Free Kit system is never fitted with a navigation system and can be fitted with two different types of radio:

Without navigation:
– Top of the range Auditorium radio without navigation (PN6) and with or without a C.D. multi-changer.
– Middle of the range radio without navigation (NR5) and without a C.D. multi-changer.

Note:
The vehicle can be fitted with a navigation system as well as the Carminat Navigation and Communication system which has a different computer to the one dealt with in this document. Fault finding can also be run on this computer. In the event of a fault with the Hands-Free Kit on a vehicle fitted with the navigation system, refer to the section on Carminat Navigation and Communication system fault finding.

FLOWCHART FOR SYSTEM WITHOUT NAVIGATION

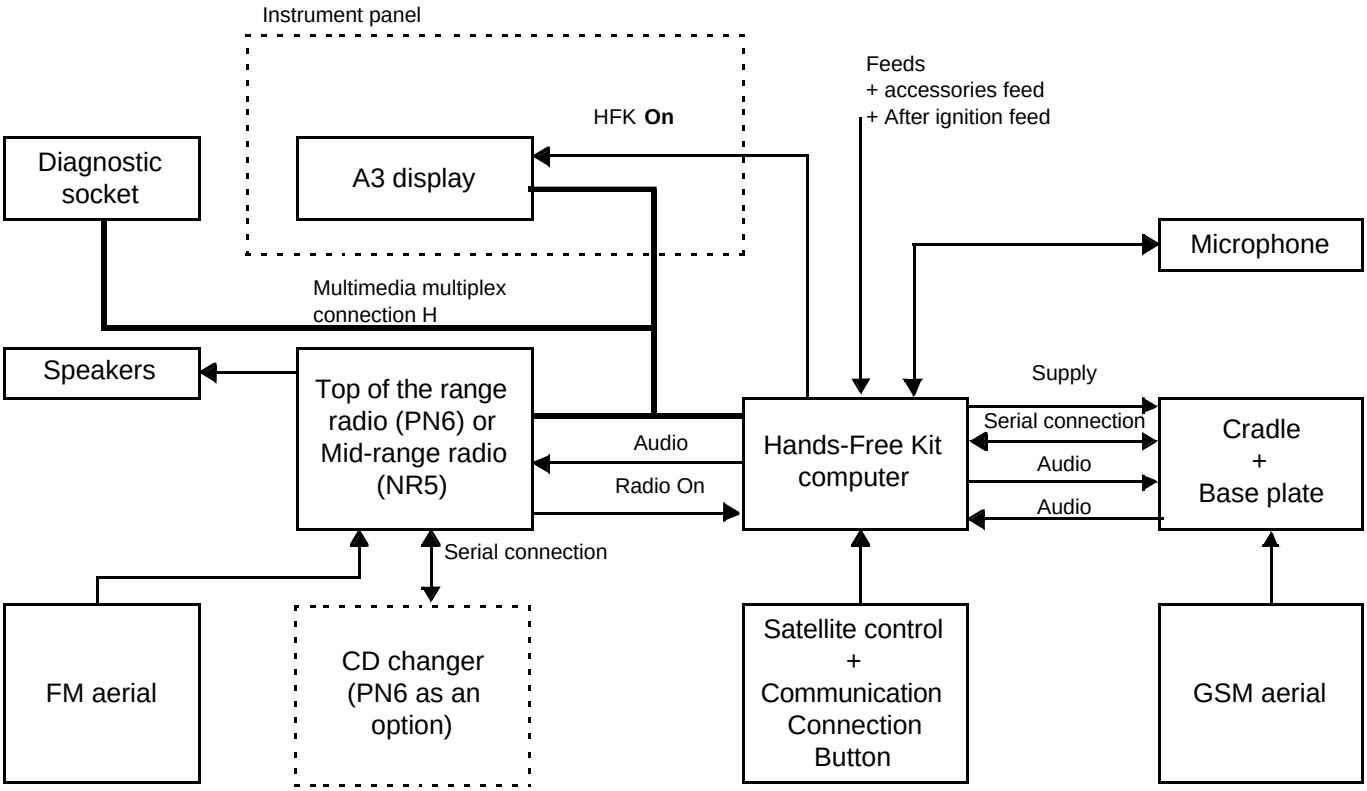

HFK On: Signal that activates the display.

Radio On: Signal that activates the Hands-Free Kit (except with + Accessories feed) and therefore starts up the audio system.

GETtheMANUALS.org

HANDS-FREE KIT computer 40-track connector:

Computer track	Description	Destination	
1	Not used		
2	HFK ON (signal to activate display)	Display	
3	Not used		
4	**+ 12 V** before ignition feed	Unit fuse	
5	Not used		
6	**+ 12 V** accessories feed	Passenger compartment fuse box	
7	**+ 12 V** after ignition feed	Passenger compartment fuse box	
8	Not used		
9	**EARTH**	EARTH	
10	Not used		
11	**CAN L** multimedia 1	Radio	
12	Telephone shunt multiplex line L		
13	Not used		
14	**Multimedia multiplex connection H** 1	Radio	
15	Telephone shunt multiplex line H		
16	Not used		
17	Communication connection button	Lighting stalk	
18	RADIO ON (activating signal for the HFK)	Radio	
19	Not used		
20	Radio control connection (signal L0)	Track **B1**	Radio controls on steering wheel (satellite control)
21	Radio control connection (IN2 signal)	Track **A3**	
22	Radio control connection (L1 signal)	Track **B2**	
23	Radio control connection (IN0 signal)	Track **B3**	
24	Radio control connection (L2 signal)	Track **A2**	
25	Radio control connection (IN1 signal)	Track **A1**	
26	Not used		
27	Not used		
28	+ signal from the microphone	Track 2 microphone	
29	+ signal from the microphone	Track 1 microphone	
30	Not used		
31	Multiplex line H terminating resistance		
32	Not used		
33	Not used		
34	Multiplex line L terminating resistance		
35	Audio connection 5	Radio	
36	Not used		
37	Audio connection 6	Radio	
38	Audio connection shielding	Radio	
39	Not used		
40	Not used		

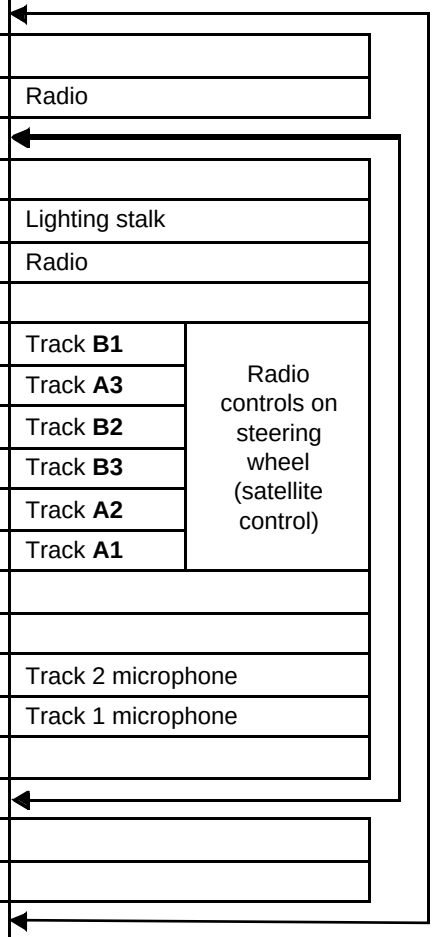

GETtheMANUALS.org

HANDS-FREE KIT computer 24-track connector:

Computer track	Description	Telephone base plate track
1	Not used	
2	Not used	
3	Audio connection 1	2
4	Audio connection 2	11
5	Audio connection shielding	
6	Audio connection 3	3
7	Audio connection 4	12
8	Not used	
9	Not used	
10	Not used	
11	Not used	
12	Not used	
13	+ 12 V telephone base plate	4
14	Telephone base plate EARTH	6
15	Not used	
16	Not used	
17	Serial connection 1	8
18	Serial connection 2	9
19	Not used	
20	Not used	
21	Serial connection 3	13
22	Serial connection 4	14
23	Not used	
24	Not used	

GETtheMANUALS.org

Telephone base plate 14-track connector:

Telephone base plate track	Description	HFK computer track
1	Not used	
2	Audio connection 1	3
3	Audio connection 3	6
4	+ 12 V telephone base plate	13
5	Not used	
6	Telephone base plate EARTH	14
7	Not used	
8	Serial connection 1	17
9	Serial connection 2	18
10	Not used	
11	Audio connection 2	4
12	Audio connection 4	7
13	Serial connection 3	21
14	Serial connection 4	22

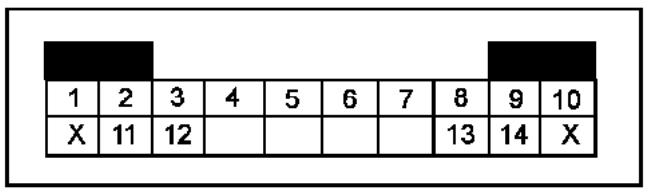

Illustration of the 14-Track connector coming from the telephone base plate (Front view).

Illustration of the 6-Track Black connector from the steering wheel satellite control:

View of the remote control:

A1	A2	A3
B1	B2	B3

ACTION	Track
Lower button (mode/OK)	A3/B1
Volume decrease	B3/B1
Volume increase	A1/B1
Telephone button	A3/B2
Audio source button	B3/B2
Tumblewheel (1st position)	A3/A2
Tumblewheel (2nd position)	B3/A2
Tumblewheel (3rd position)	A1/A2

GETtheMANUALS.org

WARNING
Before replacing the Hands-Free Phone Kit computer, check that it is faulty (read faults, conformity of variables, read customer complaints). Computer replacement is subject to authorisation by the Techline after a fault finding log has been completed and submitted.

Replacing the Hands-Free Phone computer:
- Note the computer configuration according to the optional equipment fitted on the vehicle.
- Ensure that the ignition is switched off.
- After approval from the **Techline,** replace the computer.
- Switch on the ignition and carry out a check using the diagnostic tool.
- **It is essential* to calibrate and activate computer VP011** according to the optional equipment fitted on the vehicle (see **Configurations and programming**).
- Switch off the ignition and then back on for the configurations to register.
- Go to the Read configuration menu and confirm that the configurations have been stored.
- Check for faults and carry out the fault finding procedure which corresponds to possible faults shown on the diagnostic tool.
- Clear any stored faults.
- Write the VIN by running command **VP002 Write VIN**.
- Enter the After-Sales operation date by running command **VP001 Write last After-Sales operation date**.
- Check that the **H**ands **F**ree **K**it is operating correctly.

*** WARNING**
Do not run commands **CF009 Language** and **VP011 Computer calibration and commissioning** if the part number for the computer from the Parts Department is 82 00 214 822 or 82 00 433 328: **RISK OF DAMAGING THE SYSTEM** (see identification screen).
For all other part numbers from the Parts Department, the two commands above must be run for the system to operate correctly.

GETtheMANUALS.org

SUMMARY TABLE

CONFIGURATION		OPTIONS	CONFIGURATION READING	
VP011	COMPUTER CALIBRATION AND COMMISSIONING	VEHICLE TYPE TYPE OF RADIO SCREEN TYPE EQUIPMENT LEVEL LANGUAGE (directly accessible)	**LC001**	RADIO GENERATION
			LC002	TYPE OF RADIO
			LC003	DISPLAY GENERATION
			LC004	TYPE OF DISPLAY
			LC005	HANDS-FREE KIT GENERATION
			LC006	TYPE OF HANDS-FREE KIT
			LC007	VEHICLE TYPE
CF009	LANGUAGE * (also accessible with command VP011)	FRENCH ENGLISH GERMAN ITALIAN PORTUGUESE DUTCH SPANISH	**LC009**	LANGUAGE

Note:
– Following configuration, switch the ignition off and then back on for the configurations to register.
– As this fault finding is the same as the Laguna II Phase II and Espace IV, ignore the configurations not indicated above.
– Acoustic configuration is automatic on computer calibration and commissioning.

*** WARNING**
Do not run commands **CF009 Language** and **VP011 Computer calibration and commissioning** if the part number for the computer from the Parts Department is 82 00 214 822 or 82 00 433 328: **RISK OF DAMAGING THE SYSTEM** (see identification screen).
For all other part numbers from the Parts Department, the two commands above must be run for the system to operate correctly.

– Command **VP011 Computer calibration and commissioning** enables the type of radio, vehicle type, screen type, language options, equipment level and acoustic specifications to be defined for the vehicle.

– The **CF009 Language** configuration **is used to activate voice recognition** in the language selected.

– The acoustic specifications enable adjustment of the echo/noise reduction and voice recognition functions depending on the vehicle's interior volume.

GETtheMANUALS.org

Tool fault	Associated DTC	Diagnostic tool title
DF001	**93 00**	Computer
DF002	**93 01**	Computer/display connection
DF003	**93 02**	Computer supply
DF004	**93 03**	Computer/microphone connection
DF005	**93 04**	Telephone cradle power supply
DF006	**93 11**	Computer/telephone cradle connection
DF007	**93 12**	Telephone signal
DF008	**93 2A**	Inconsistent acoustic configuration
DF011	**93 A2**	No radio multiplex signal
DF012	**93 A3**	No display multiplex signal
DF013	**93 23**	Incorrect configuration of audio equipment
DF014	**93 24**	Incorrect display configuration
DF015	**93 21**	Computer configuration
DF016	**93 16**	Computer

GETtheMANUALS.org

DF001 PRESENT OR STORED	COMPUTER 1.DEF: internal electronic fault

NOTES	**Priority in the event of a number of faults:** Firstly, deal with fault **DF003 Computer supply voltage**, if it is present or stored.

If the fault is stored:
Clear the fault, switch off the ignition and disconnect the computer supply fuse (see wiring diagram).
Reconnect the fuse and switch on the ignition again (forced + after ignition feed).

If the fault reappears as **stored** when the ignition is switched on:
Check the **connection, condition and conformity** of the Hands-Free Kit computer connectors and their clips.
Repair if necessary.

Disconnect the Hands-Free Kit computer 40-track connector and check the conformity of the electrical supplies (they must be the same as the battery voltage).
In the event of a fault, check the **insulation, continuity and the absence of interference resistance** on the following connections:

Hands-Free Kit computer 40-track connector

Track 9	→	**Earth**
Track 4	→	**+ 12 V before ignition feed**
Track 6	→	**+ 12 V accessories feed**
Track 7	→	**+ 12 V after ignition feed**

Repair if necessary.

If the fault is present or if it cannot be dealt with, fill in the **fault finding log** and contact the **Techline**.

AFTER REPAIR	If the computer was replaced (**at the request of the Techline**): reconfigure the computer (see **Configurations and programming**). Deal with any other faults.

GETtheMANUALS.org

DF002 PRESENT OR STORED	COMPUTER/DISPLAY CONNECTION CO.1 : open circuit or short circuit to + 12 V CC.0 : short circuit to earth

NOTES	**Priorities when dealing with a number of faults:** First deal with fault **DF014 Incorrect display configuration**.

Check the **connection, condition and conformity** of the Hands-Free Kit computer 40-track connector and its clips.
Repair if necessary.

Check the **connection, condition and conformity** of the instrument panel 24-track connector and its clips.
Repair if necessary.

Disconnect the Hands-Free Kit computer 40-track connector and the A3 display 24-track connector to check the **insulation, continuity and the absence of interference resistance** of the connection:

Hands-Free Kit computer Black 40-track connector		**A3 display Black 24-track connector**
Track 2	→	**Track 16**

Repair if necessary.

AFTER REPAIR	Clear the stored faults. Deal with any other faults. Check that the system is operating correctly.

GETtheMANUALS.org

DF003 PRESENT OR STORED	COMPUTER SUPPLY VOLTAGE 1.DEF: undervoltage 2.DEF: excess voltage

NOTES	**Special notes:** The undervoltage fault appears if the computer supply voltage is equal to or less than **8.5 V**. The excess voltage fault appears if the computer supply voltage is equal to or greater than **16 V**.

Check the conformity of the battery voltage (**10 V < X < 14.4 V**).
If the voltage is not correct, run fault finding on the battery and the charge circuit.

Check that the fuses are in good condition: F23 of 10A (+ 12 V accessories feed), F28 of 20A (+ 12 V after ignition feed) and F50 of 20A (+ 12 V before ignition feed): see wiring diagram.

Check the **connection, condition and conformity** of the Hands-Free Kit computer connectors and their clips.
Repair if necessary.

Disconnect the Hands-Free Kit computer 40-track connector and check the conformity of the electrical supplies (they must be the same as the battery voltage).
In the event of a fault, check the **insulation, continuity and the absence of interference resistance** on the following connections:

Hands-Free Kit computer 40-track connector

Track 9	→	**Earth**
Track 4	→	**+ 12 V before ignition feed** (see vehicle diagram)
Track 6	→	**+ 12 V accessories feed** (see vehicle diagram)
Track 7	→	**+ 12 V after ignition feed** (see vehicle diagram)

Repair if necessary.

AFTER REPAIR	Clear the stored faults. Deal with any other faults. Check that the system is operating correctly.

GETtheMANUALS.org

DF004 PRESENT OR STORED	COMPUTER/MICROPHONE CONNECTION CO : open circuit CC.0 : short circuit to earth CC.1 : short circuit to + 12 V

NOTES	**Special notes:** The microphone is located in the middle of the sun visor.

Run the **VP004 Test microphone** command (repair mode of the diagnostic tool, parameter setting tab): see the interpretation of this command.

If the result from the test is 0 %, check **the connection, condition and conformity** of the Hands-Free Kit computer 40-track connector and its clips and **the connection, condition and conformity** of the microphone's grey 6-track connector and its clips.
Repair if necessary.

Switch off the ignition and disconnect the aforementioned connectors to check the insulation, continuity and absence of interference resistance on the following connections:

Hands-Free Kit computer 40-track connector		**Microphone 6-track connector**
Track 28 (+ Microphone)	→	**Track 2**
Track 29 (- Microphone)	→	**Track 1**

Repair if necessary (refer to vehicle wiring diagrams).

AFTER REPAIR	Clear the stored faults. Deal with any other faults. Check that the system is operating correctly.

GETtheMANUALS.org

DF005 PRESENT OR STORED	TELEPHONE CRADLE POWER SUPPLY CO.1 : open circuit or short circuit to + 12 V CC.0 : short circuit to earth

NOTES	**Priorities when dealing with a number of faults:** Firstly, deal with fault **DF003 Computer supply voltage**, if it is present or stored. **Special notes:** The telephone cradle is located in the centre console.

Check the conformity of the battery voltage (**10 V < X < 14.4 V**).
If the voltage is not correct, run fault finding on the battery and the charge circuit.

Check that the fuses are in good condition: F23 of 10A (+ 12 V accessories feed), F28 of 20A (+ 12 V after ignition feed) and F50 of 20A (+ 12 V before ignition feed): see wiring diagram.

Check the **connection, condition and conformity** of the telephone base plate connector (behind the gear lever) as well as the condition of the electrical contacts between the base plate in the vehicle and the telephone cradle. Repair if necessary.

Check the insulation, continuity and the absence of interference resistance on the following connections:

Hands-Free Kit computer Black 24-track connector		**Telephone cradle 14-track connector**
Track 13	→	**Track 4 (+ 12 V)**
Track 14	→	**Track 6 (earth)**

Repair if necessary.

If the connections checked before and the power supplies are fine but the fault is still present: replace the telephone base plate.

AFTER REPAIR	Clear the stored faults. Deal with any other faults. Check that the system is operating correctly.

GETtheMANUALS.org

DF006 PRESENT OR STORED	COMPUTER/TELEPHONE CRADLE CONNECTION 1.DEF: absence of or poor response from telephone cradle to the computer

NOTES	**Priorities when dealing with a number of faults:** Firstly, deal with fault **DF005 Telephone cradle supply voltage**, if present or stored.
	Special notes: The connections between the computer and the telephone base plate comprise wire connections. The telephone base plate is located in the centre console.

Activate the **VP005 Series connections test** command (repair mode of the diagnostic tool, setting tab).

If the command result displays Incorrect:
Check the **connection, condition and conformity** of the telephone base plate connector (behind the gear lever) as well as the condition of the electrical contacts between the base plate in the vehicle and the telephone cradle.
Repair if necessary.

Check the **connection, condition and conformity** of the Hands-Free Kit computer 24-track connector and its clips.
Repair if necessary.

Disconnect the computer 24-track connector and that of the telephone base plate and check **the insulation, continuity and absence of interference resistance** on the following serial connections:

Hands-Free Kit computer 24-track connector		**Telephone base plate 14-track connector**
Track 17	→	**Track 8**
Track 18	→	**Track 9**
Track 21	→	**Track 13**
Track 22	→	**Track 14**

Repair if necessary.

AFTER REPAIR	Clear the stored faults. Deal with any other faults. Check that the system is operating correctly.

GETtheMANUALS.org

DF007 PRESENT OR STORED	TELEPHONE SIGNAL 1.DEF: signal incoherence

NOTES	**Processing priority in the event of a number of faults:** Firstly, deal with fault **DF006 Computer/telephone connection**, if it is present or stored.
	Special notes: The telephone base plate is located in the centre console. This fault indicates either an absence of communication or poor communication between the telephone (or the telephone cradle and not the base plate) and the computer.

Check **the connection and the status** of the telephone cradle base plate connector. Repair if necessary.
Check the condition of the telephone base plate and the telephone cradle contacts (gold-plated contacts). Replace the vehicle base plate or the telephone cradle if necessary.
Put the telephone in its cradle and check on the navigation screen that the telephone is detected ("Tel" non barred symbol). If the fault is still present, check that the customer telephone still works.

AFTER REPAIR	Clear the stored faults. Deal with any other faults. Check that the system is operating correctly.

GETtheMANUALS.org

DF008 PRESENT OR STORED	INCONSISTENT ACOUSTIC CONFIGURATION 1.DEF: incorrect acoustic parameters

NOTES	**Special note:** This fault indicates that the acoustic parameters in the computer's memory are not correct for the vehicle to which the system is fitted.

Set the acoustic parameters in the computer by running command **VP011 Computer calibration and commissioning** (see **Configurations and programming**).

AFTER REPAIR	Clear the stored faults. Deal with any other faults. Check that the system is operating correctly.

GETtheMANUALS.org

DF010 PRESENT OR STORED	HANDS FREE KIT MULTIPLEX NETWORK 1.DEF: No computer multiplex signal

NOTES	**Processing priority in the event of a number of faults:** Deal with fault **DF013 Incorrect audio equipment configuration** first, if present or stored.

PN6 top of the range radio

Disconnect the 40-track connector from the Hands-Free Phone unit, and the 15-track radio connector (PN6) to check the insulation, **continuity and the absence of interference resistance** on the following connections:

Hands-Free Phone computer 40-track connector		**PN6 Radio Black 15-track connector**
Track 14	→	**Track 3**
Track 11	→	**Track 4**
PN6 Radio Black 15-track connector		**Diagnostic socket**
Track 1	→	**Track 13**
Track 2	→	**Track 12**

Repair if necessary.

NR5 mid-range radio

Disconnect the 40-track connector from the Hands-Free Phone unit, and the yellow 6-track radio connector (NR5) to check the insulation, **continuity and the absence of interference resistance** on the following connections:

Hands-Free Phone computer 40-track connector		**NR5 radio Yellow 6-track connector**
Track 14	→	**Track 2**
Track 11	→	**Track 1**
NR5 radio Black 15-track connector		**Diagnostic socket**
Track 1	→	**Track 12**
Track 2	→	**Track 13**

Repair if necessary.

AFTER REPAIR	Clear the stored faults. Deal with any other faults. Check that the system is operating correctly.

GETtheMANUALS.org

DF011 PRESENT OR STORED	NO RADIO MULTIPLEX SIGNAL

NOTES	**Processing priority in the event of a number of faults:** Deal with fault **DF013 Incorrect audio equipment configuration** first, if present or stored.

PN6 top of the range radio

Disconnect the 40-track connector from the Hands-Free Phone unit, and the 15-track radio connector (PN6) to check the insulation, **continuity and the absence of interference resistance** on the following connections:

Hands-Free Phone computer 40-track connector		**PN6 Radio Black 15-track connector**
Track 14	→	**Track 3**
Track 11	→	**Track 4**

PN6 Radio Black 15-track connector		**Diagnostic socket**
Track 1	→	**Track 13**
Track 2	→	**Track 12**

Repair if necessary.

NR5 mid-range radio

Disconnect the 40-track connector from the Hands-Free Phone unit, and the yellow 6-track radio connector (NR5) to check the insulation, **continuity and the absence of interference resistance** on the following connections:

Hands-Free Phone computer 40-track connector		**NR5 radio Yellow 6-track connector**
Track 14	→	**Track 2**
Track 11	→	**Track 1**

NR5 radio Black 15-track connector		**Diagnostic socket**
Track 1	→	**Track 12**
Track 2	→	**Track 13**

Repair if necessary.

AFTER REPAIR	Clear the stored faults. Deal with any other faults. Check that the system is operating correctly.

GETtheMANUALS.org

DF012 PRESENT OR STORED	NO DISPLAY MULTIPLEX SIGNAL

NOTES	**Processing priority in the event of a number of faults:** Deal with fault **DF014 Incorrect display configuration** first, if present or stored.

Check that the computer is configured correctly; reconfigure if necessary (see **Configurations and programming**).
In the event of a fault, run **fault finding on the multiplex network**.

Check the connection and the condition of the Hands-Free Kit computer 40-track connectors and the display's 24-track connector.

PN6 top of the range radio

Disconnect the radio (PN6) black 15-track connector, the Hands-Free Kit computer black 40-track connector and the A3 display black 24-track connector, to check the insulation, continuity and absence of interference resistance on the following connections:

A3 display 24-track connector		**PN6 Radio 15-track connector**	**Hands-Free Kit computer 40-track connector**		
Track 11	→	**Track 2**	**Track 4**	→	**Track 11**
Track 12	→	**Track 1**	**Track 3**	→	**Track 14**

PN6 Radio Black 15-track connector		**Diagnostic socket**
Track 1	→	**Track 13**
Track 2	→	**Track 12**

Repair if necessary.

AFTER REPAIR	Clear the stored faults. Deal with any other faults. Check that the system is operating correctly.

GETtheMANUALS.org

DF012 **CONTINUED**	

NR5 mid-range radio

Disconnect the radio (NR5) yellow 6-track connector and the Hands-Free Kit computer black 40-track connector to check the insulation, continuity and the absence of interference resistance on the following connections:

A3 display 24-track connector		**NR5 radio 6-track connector**
Track 11	→	**Track 1**
Track 12	→	**Track 2**

NR5 radio Black 15-track connector		**Diagnostic socket**
Track 1	→	**Track 12**
Track 2	→	**Track 13**

Repair if necessary.

AFTER REPAIR	Clear the stored faults. Deal with any other faults. Check that the system is operating correctly.

GETtheMANUALS.org

DF013 PRESENT	INCORRECT CONFIGURATION OF AUDIO EQUIPMENT

NOTES	**None.**

Configure the Hands-Free Kit computer by running command **VP011 Computer calibration and commissioning** (see **Configurations and programming**).
Following configuration, switch the ignition off and then back on for the configurations to register.

AFTER REPAIR	Clear the stored faults. Deal with any other faults. Check that the system is operating correctly.

GETtheMANUALS.org

DF014 PRESENT	INCORRECT DISPLAY CONFIGURATION

NOTES	**None.**

Configure the Hands-Free Kit computer by running command **VP011 Computer calibration and commissioning** (see **Configurations and programming**).
Following configuration, switch the ignition off and then back on for the configurations to register.

AFTER REPAIR	Clear the stored faults. Deal with any other faults. Check that the system is operating correctly.

GETtheMANUALS.org

DF015 PRESENT	COMPUTER CONFIGURATION 1.DEF: blank or incomplete configuration

NOTES	**None.**

Configure the Hands-Free Kit computer by running command **VP011 Computer calibration and commissioning** (see **Configurations and programming**).
Following configuration, switch the ignition off and then back on for the configurations to register.

AFTER REPAIR	Clear the stored faults. Deal with any other faults. Check that the system is operating correctly.

GETtheMANUALS.org

DF016 PRESENT OR STORED	COMPUTER 1.DEF: inconsistencies in computer software

NOTES	**Priority in the event of a number of faults:** Firstly, deal with fault **DF003 Computer supply voltage**, if it is present or stored.

If the fault is stored, clear the fault, switch off the ignition and disconnect the computer's supply fuse (see wiring diagram).
Reconnect the fuse and switch on the ignition again (forced + after ignition feed).

If the fault reappears as **stored** when ignition is switched on, check the **connection, condition and conformity** of the Hands-Free Kit computer connectors and their clips.
Repair if necessary.

Disconnect the Hands-Free Kit computer 40-track connector and check the conformity of the electrical supplies (they must be the same as the battery voltage).
In the event of a fault, check the **insulation, continuity and the absence of interference resistance** on the following connections:

Hands-Free Kit computer 40-track connector

Track 9	→	**Earth**
Track 4	→	**+ 12 V before ignition feed**
Track 6	→	**+ 12 V accessories feed**
Track 7	→	**+ 12 V after ignition feed**

Repair if necessary.

If the fault is present or if it cannot be dealt with, fill in the **fault finding log** and contact the **Techline**.

AFTER REPAIR	If the computer was replaced (**at the request of the Techline**): reconfigure the computer (see **Configurations and programming**). Deal with any other faults.

GETtheMANUALS.org

NOTES	Carry out this conformity check after a full check using the diagnostic tool (fault reading and configuration checks). **Conditions of use:** ignition on.

MAIN COMPUTER STATUSES AND PARAMETERS

Order	Function	Parameter or Status checked or Action		Display and notes	Fault finding
1	Main computer statuses and parameters	**ET002:**	RADIO ON SIGNAL	**PRESENT** when the radio is switched on. **ABSENT** if not.	In the event of a fault, **consult the interpretation for this status**.
		ET003:	+ 12 V after ignition feed	**PRESENT** **ABSENT**	In the event of a fault, **consult the interpretation for this status**.
		ET004:	+ 12 V accessories feed	**PRESENT** **ABSENT**	In the event of a fault, **consult the interpretation for this status**.
		PR003:	Battery voltage	**10 V < X < 14.4 V**	In the event of a fault, **consult the interpretation for this parameter**.
		PR004:	Vehicle speed	**X mph (km/h)**	In the event of a fault, **consult the interpretation for this parameter**.

GETtheMANUALS.org

NOTES	Carry out this conformity check after a full check using the diagnostic tool (fault reading and configuration checks). **Conditions of use:** ignition on.

DRIVER SELECTION SUB-FUNCTION

Order	Function	Parameter or Status checked or Action	Display and notes	Fault finding
1	Radio satellite control buttons	**ET006:** + button	**PRESSED** if the + button is pressed on the satellite control. **RELEASED** otherwise.	In the event of a fault, refer to **the interpretation of this status**.
		ET007: - button	**PRESSED** if the - button is pressed on the satellite control. **RELEASED** otherwise.	In the event of a fault, refer to **the interpretation of this status**.
		ET008: Upper button	**PRESSED** if the top satellite control button is pressed. **RELEASED** otherwise.	In the event of a fault, refer to **the interpretation of this status**.
		ET009: Upper button	**PRESSED** if the upper satellite control button is pressed. **RELEASED** otherwise.	In the event of a fault, refer to **the interpretation of this status**.
		ET010: Lower button	**PRESSED** if the bottom satellite control button is pressed. **RELEASED** otherwise.	In the event of a fault, refer to **the interpretation of this status**.
		ET011: Wheel action	**INACTIVE** if the wheel is inactive, **UPWARDS** or **DOWNWARDS** depending on the action on the wheel.	In the event of a fault, refer to **the interpretation of this status**.
		ET013: Communication connection button	**PRESSED** if the communication connection button is pressed. **RELEASED** otherwise.	In the event of a fault, refer to **the interpretation of this status**.

GETtheMANUALS.org

NOTES	Carry out this conformity check after a full check using the diagnostic tool (fault reading and configuration checks). **Conditions of use:** ignition on and telephone in its cradle.

TELEPHONE SUB-FUNCTION

Order	Function	Parameter or Status checked or Action		Display and notes	Fault finding
2	Telephone	**ET002:**	"Radio on" signal	**PRESENT** when the radio is switched on. **ABSENT** otherwise.	In the event of a fault, refer to **the interpretation of this status**.
		ET014:	Telephone	**PRESENT** when the telephone is present. **ABSENT** otherwise.	In the event of a fault, refer to **the interpretation of this status**.
		ET021:	Telephone operation	**OFF** when the telephone is switched off. **ON** otherwise.	In the event of a fault, refer to **the interpretation of this status**.
		ET015:	PIN Code	**VALID** if the code is correct. **WRONG** if not.	In the event of a fault, refer to **the interpretation of this status**.
		ET016:	Telephone network	**PRESENT** if the telephone network is present (telephone in its cradle). **ABSENT** otherwise.	In the event of a fault, refer to **the interpretation of this status**.
		PR001:	Telephone signal	**0 % < X < 100 %** (to find out the signal level, the telephone must be in its cradle).	If there is a fault, refer to the **interpretation of this parameter**

GETtheMANUALS.org

NOTES	Carry out this conformity check after a full check using the diagnostic tool (fault reading and configuration checks). **Conditions of use:** ignition on.

RING TONE TESTS SUB-FUNCTION

Order	Function	Parameter or Status checked or Action	Display and notes	Fault finding
3	Ring tones	**AC001:** Telephone ring tone	The telephone's ring tone must be audible.	In the event of a fault, refer to the **interpretation of this command**.
		AC003: Low-pitched tone	A low-pitched tone should be heard.	In the event of a fault, refer to the **interpretation of this command**.
		AC002: High-pitched tone	A high-pitched tone should be heard.	In the event of a fault, refer to the **interpretation of this command**.

GETtheMANUALS.org

Tool status	Diagnostic tool title
ET002	"Radio on" signal
ET003	+ 12 V after ignition feed
ET004	+ 12 V accessories feed
ET006	+ button
ET007	- button
ET008	Top button
ET009	Upper button
ET010	Lower button
ET011	Wheel action
ET013	Communication connection button
ET014	Telephone
ET015	PIN Code
ET016	Telephone network
ET021	Telephone operation

GETtheMANUALS.org

ET002	RADIO ON SIGNAL

NOTES	**Special notes:** **ET002 RADIO ON SIGNAL** has two specifications: – present, – absent.

PN6 auditorium radio

This signal activates the Hands-Free Kit (except with + Accessories feed) and therefore starts up the audio system. It passes between the Hands-Free Kit computer and the radio.

If the signal is **Absent** when the radio is switched on, disconnect the Hands-Free Kit computer 40-track connector and the top of the range radio black 15-track PN6 connector to check the **insulation, continuity and absence of interference resistance** of the connection:

Hands-Free Kit computer 40-track connector		**Top of the range radio Black 15-track connector**
Track 18	→	**Track 8**

Repair if necessary.

NR5 mid-range radio

This signal activates the Hands-Free Kit (outside + accessories feed) thereby turning on the audio system; the signal passes between the Hands-Free Kit computer and the radio.

If the signal is **Absent** when the radio is switched on, disconnect the 40-track Hands-Free Kit computer connector and the middle of the range black/yellow 6-track NR5 radio connector to check the **insulation, continuity and absence of interference resistance** on the following connections:

Hands-Free Kit computer 40-track connector		**Mid-range radio Yellow 6-track connector**
Track 18	→	**Track 5**

Repair if necessary.

AFTER REPAIR	Repeat the conformity check from the start.

GETtheMANUALS.org

ET003	+ 12 V AFTER IGNITION

NOTES	**Special notes:** The **ET003 + 12 V after ignition feed** has two specifications: – present, – absent. If the status is absent when ignition is switched on, apply the interpretation for this status.

The **+ 12 V** after ignition feed to the Hands-Free Kit computer is supplied via track 7 of the 40-track connector.
With the ignition switched on, check the presence and conformity of the **+ 12 V** after ignition feed on track 7 of the Hands-Free Kit computer.
If the feed is not correct:
– check the 20A F28 fuse located in the passenger compartment fuse and relay box (replace it if necessary),
– use the universal bornier to check the **insulation, continuity and the absence of interference resistance** on the following connection:

Passenger compartment fuse and relay box
White 18-track green clip connector, Track 3
→
40-track Hands-Free Kit computer connector, track 7

Repair if necessary.

Reconnect the passenger compartment fuse and relay box and connectors and the Hands-Free Kit computer connectors.

If the fault is still present, carry out fault finding on the charge circuit.

AFTER REPAIR	Repeat the conformity check from the start.

GETtheMANUALS.org

ET004	+ 12 V ACCESSORIES

NOTES	**Special notes:** **ET004 + 12 V accessories feed** has two specifications: – present, – absent. If the status is absent when ignition is switched on, apply the interpretation for this status.

The **+ 12 V** accessories feed to the Hands-Free Kit computer is supplied via track 6 of the 40-track connector.
With the ignition switched on, check the presence and conformity of the **+ 12 V** accessories feed on track 6 of the Hands-Free Kit computer.
If the feed is not correct:
– check the 10 A F23 fuse located in the passenger compartment fuse and relay box (replace it if necessary).
– use the universal bornier to check the **insulation, continuity and the absence of interference resistance** on the following connection:

Passenger compartment fuse and relay box **Black 27-track connector, track 7**	→	**Hands-Free Kit computer** Track 6, 40-track connector

Repair if necessary.

Reconnect the passenger compartment fuse and relay box and connectors and the Hands-Free Kit computer connectors.

If the fault is still present, carry out fault finding on the charge circuit.

AFTER REPAIR	Repeat the conformity check from the start.

GETtheMANUALS.org

ET006	+ BUTTON

NOTES	**Special notes:** **ET006 + button** has two specifications: – pressed, – released. If the specification of the status is not the same as the action on the button, apply this fault finding procedure. For the allocation of the satellite tracks (see the Allocation of computer tracks section).

Disconnect the connector from the satellite control and run the following check using an ohmmeter:
- **+** button pressed: continuity (**R < 150 Ω**) between track **A1** and track **B1**,
- **+** button released: no continuity between track **A1** and track **B1**,

If the button does not operate as indicated, replace the radio satellite control.

If the satellite control is operating correctly, disconnect the Hands-Free Kit computer 40-track connector to check **the insulation, continuity and absence of interference resistance** on the following connections:

Hands-Free Kit computer 40-track connector		**Radio satellite control**
Track 20	→	**Track B1**
Track 25	→	**Track A1**

Repair if necessary.

AFTER REPAIR	Repeat the conformity check from the start.

GETtheMANUALS.org

ET007	- BUTTON

NOTES	**Special notes:** **ET007 - button** has two specifications: – pressed, – released. If the specification of the status is not the same as the action on the button, apply this fault finding procedure. For the allocation of the satellite tracks (see the Allocation of computer tracks section).

Disconnect the connector from the satellite control and run the following check using an ohmmeter:
– **-** button pressed: continuity (**R < 150 Ω**) between track **B3** and track **B1**,
– **-** button released: no continuity between track **B3** and track **B1**,
If the button does not operate as indicated, replace the radio satellite control.

If the satellite control is operating correctly, disconnect the Hands-Free Kit computer 40-track connector to check **the insulation, continuity and absence of interference resistance** on the following connections:

Hands-Free Kit computer 40-track connector		**Radio satellite control**
Track 20	→	**Track B1**
Track 23	→	**Track B3**

Repair if necessary.

AFTER REPAIR	Repeat the conformity check from the start.

GETtheMANUALS.org

ET008	TOP BUTTON

NOTES	**Special notes:** **ET008 Upper button** has two specifications: – pressed, – released. If the specification of the status is not the same as the action on the button, apply this fault finding procedure.
	Note: The upper button has the words Audio Source on it (button near to the steering wheel). For the allocation of the satellite tracks (see the Allocation of computer tracks section).

Disconnect the connector from the satellite control and run the following check using an ohmmeter:
- Upper button pressed: continuity (**R < 150 Ω**) between track **B3** and track **B2**,
- Upper button released: no continuity between track **B3** and track **B2**.

If the button does not operate as indicated, replace the radio satellite control.

If the satellite control is operating correctly, disconnect the Hands-Free Kit computer 40-track connector to check **the insulation, continuity and absence of interference resistance** on the following connections:

Hands-Free Kit computer 40-track connector		**Radio satellite control**
Track 23	→	**Track B3**
Track 22	→	**Track B2**

Repair if necessary.

AFTER REPAIR	Repeat the conformity check from the start.

GETtheMANUALS.org

ET009	TOP BUTTON

NOTES	**Special notes:** The **ET009 Top button** has two specifications: – pressed, – released. If the specification of the status is not the same as the action on the button, apply this fault finding procedure. For the allocation of the satellite tracks (see the Allocation of computer tracks section). Note: The top button is the button with a telephone symbol.

Disconnect the connector from the satellite control and run the following check using an ohmmeter:
- Top button pressed: continuity (**R < 150 Ω**) between track **A3** and track **B2**,
- Top button released: no continuity between track **A3** and track **B2**.

If the button does not operate as indicated, replace the radio satellite control.

If the satellite control is operating correctly, disconnect the Hands-Free Kit computer 40-track connector to check **the insulation, continuity and absence of interference resistance** on the following connections:

Hands-Free Kit computer 40-track connector		**Radio satellite control**
Track 21	→	**Track A3**
Track 22	→	**Track B2**

Repair if necessary.

AFTER REPAIR	Repeat the conformity check from the start.

GETtheMANUALS.org

ET010	LOWER BUTTON

NOTES	**Special notes:** **ET010 Lower button** has two specifications: – pressed, – released. If the specification of the status is not the same as the action on the button, apply this fault finding procedure. For the allocation of the satellite tracks (see the Allocation of computer tracks section).
	Note: The lower button is the lower button on the satellite control.

Disconnect the connector from the satellite control and run the following check using an ohmmeter:
- Lower button pressed: continuity (**R < 150 Ω**) between track **A3** and track **B1**,
- Lower button released: no continuity between track **A3** and track **B1**.

If the button does not operate as indicated, replace the radio satellite control.

If the continuity on the satellite control is correct when a button is pressed, disconnect the Hands-Free Kit computer 40-track connector to check the insulation, continuity and absence of interference resistance on the following connections:

Hands-Free Kit computer 40-track connector		**Radio satellite control**
Track 21	→	**Track A3**
Track 20	→	**Track B1**

Repair if necessary.

AFTER REPAIR	Repeat the conformity check from the start.

GETtheMANUALS.org

ET011	TUMBLEWHEEL ACTION

NOTES	**Special notes:** **ET011 Tumblewheel action** has three specifications: – inactive, – upwards, – downwards, If the status specification is inactive when the tumblewheel is activated, apply the interpretation of this status. For the allocation of the satellite tracks (see the Allocation of computer tracks section).

Check the operation of the satellite control by referring to Steering wheel control in Section 86A of the Electrical equipment MR.

- Tumblewheel 1st position: continuity (**R = 1.5 Ω ± 0.5**) between track **A3** and track **A2**,
- Tumblewheel 2nd position: continuity between track **B3** and track **A2**,
- Tumblewheel 3rd position: continuity between track **A1** and track **A2**,

If the button does not operate as indicated, replace the radio satellite control.

If the satellite control is operating correctly, disconnect the Hands-Free Kit computer 40-track connector to check **the insulation, continuity and absence of interference resistance** on the following connections:

Hands-Free Kit computer 40-track connector		**Radio satellite control**
Track 24	→	**Track A2**
Track 21	→	**Track A3**
Track 23	→	**Track B3**
Track 25	→	**Track A1**

Repair if necessary.

AFTER REPAIR	Repeat the conformity check from the start.

GETtheMANUALS.org

ET013	COMMUNICATION CONNECTION BUTTON

NOTES	**Special notes:** **ET013 Communication connection button** has two specifications: – pressed, – released. If the specification of the status is not the same as the action on the button, apply this fault finding procedure.
	Note: The communication connection button is located on the end of the lighting stalk.

Disconnect the Hands-Free Kit computer 40-track connector to check the insulation, continuity and absence of interference resistance on the following connection:

Hands-Free Kit computer 40-track connector		**Lighting stalk black 3-track connector**
Track 17	⟶	**Track 2**

Repair if necessary.

AFTER REPAIR	Repeat the conformity check from the start.

GETtheMANUALS.org

ET014	TELEPHONE

NOTES	**Special notes:** **ET014 Telephone** has two specifications: – present, – absent. If the specification of the status is not the same as the status of the system, apply this fault finding procedure.
	Note: This status is only active if the telephone is in its cradle.

Check the status and connection of the 14-track base plate connector. Repair if necessary.
Check the condition of the contacts between the vehicle base plate and the telephone cradle. Replace the base plate or the cradle if necessary.
If the fault is still present, check that the telephone is operating.

AFTER REPAIR	Repeat the conformity check from the start.

GETtheMANUALS.org

ET015	PIN CODE

NOTES	**Special notes:** **ET015 PIN code** has two specifications: – valid, – incorrect. If the specification of the status is not the same as the status of the system, apply this fault finding procedure.
	Note: This status is only active if the telephone is in its cradle.

Make sure that the PIN code entered in the telephone is correct.
If not, re-enter the correct PIN code.

AFTER REPAIR	Repeat the conformity check from the start.

GETtheMANUALS.org

ET016	TELEPHONE NETWORK

NOTES	**Special notes:** **ET016 Telephone network** has two specifications: – present, – absent. If the specification of the status is not the same as the status of the system, apply this fault finding procedure.
	Note: – This status is only active if the telephone is in its cradle. – Check on the telephone that the telephone network is present (bargraph on the telephone). If the telephone cannot detect the network, change position before interpreting this status.

Fit the **Elé. 1737** test adapter in the place of the telephone cradle to check the aerial connection: Adapter warning light is green: the connection is fine. Adapter warning light is red: the connection is incorrect.
If the adapter warning light is red, check the insulation, **continuity and absence of interference resistance** on the connection between the aerial and the vehicle base plate. Note: This connection is ensured by a coaxial cable that joins the aerial directly to the base plate.
If the status does not operate as indicated, check the condition of the contacts between the base plate on the vehicle and the telephone cradle
If the fault is still present, check that the telephone is operating.

AFTER REPAIR	Repeat the conformity check from the start.

GETtheMANUALS.org

ET021	TELEPHONE OPERATION

NOTES	**Special notes:** **ET021 Telephone operation** has two specifications: – on, – off. If the specification of the status is not the same as the status of the system, apply this fault finding procedure.
	Note: – This status is only active if the telephone is in its cradle. – Check the operation of the telephone before interpreting this status.

If the status does not operate as indicated, check the condition of the contacts between the base plate on the vehicle and the telephone cradle
If the fault is still present, check that the telephone is operating.

AFTER REPAIR	Repeat the conformity check from the start.

GETtheMANUALS.org

Tool parameter	Diagnostic tool title
PR001	Telephone signal
PR003	Battery voltage
PR004	Vehicle speed

GETtheMANUALS.org

PR001	TELEPHONE SIGNAL

NOTES	**Special notes:** – This parameter only operates if the telephone is in its cradle. – Check on the telephone that the telephone network is indeed present (bargraphs on the telephone). If the system is not detected by the telephone, change position before interpreting this parameter.

Fit the **Elé. 1737** test adapter in the place of the telephone cradle to check the aerial connection: Adapter warning light is green: the connection is fine. Adapter warning light is red: the connection is incorrect.
If the adapter warning light is red, check the insulation, **continuity and absence of interference resistance** on the connection between the aerial and the vehicle base plate. Note: This connection is ensured by a coaxial cable that joins the aerial directly to the base plate.
If the parameter does not operate as indicated in the conformity check, check the condition of the contacts between the vehicle base plate and the telephone cradle.
If the fault is still present, check that the telephone is operating.

AFTER REPAIR	Repeat the conformity check from the start.

GETtheMANUALS.org

PR003	BATTERY VOLTAGE

NOTES	None

Check the conformity of the battery voltage (**10 V < X < 14.4 V**).
If the voltage is not correct, run fault finding on the battery and the charge circuit.

Check that the fuses are in good condition: F23 of 10A (+ 12 V accessories feed), F28 of 20A (+ 12 V after ignition feed) and F50 of 20A (+ 12 V before ignition feed): see wiring diagram.

Check the **connection, condition and conformity** of the Hands-Free Kit computer connectors and their clips.
Repair if necessary.

Disconnect the Hands-Free Kit computer 40-track connector and check the conformity of the electrical supplies (they must be the same as the battery voltage).
In the event of a fault, check the **insulation, continuity and the absence of interference resistance** on the following connections:

- Computer connector **Track 9** → **Earth**
- Computer connector **Track 4** → **+ 12 V before ignition feed** (see vehicle diagram)
- Computer connector **Track 6** → **+ 12 V accessories feed** (see vehicle diagram)
- Computer connector **Track 7** → **+ 12 V after ignition feed** (see vehicle diagram)

Repair if necessary.

AFTER REPAIR	Repeat the conformity check from the start.

GETtheMANUALS.org

PR004	VEHICLE SPEED

NOTES	None

If this parameter is inconsistent, carry out fault finding on the ABS system.

AFTER REPAIR	Repeat the conformity check from the start.

GETtheMANUALS.org

Tool command	Diagnostic tool title
RZ001	Fault memory
AC001	Telephone ring tone
AC002	High-pitched tone
AC003	Low-pitched tone
VP001	Enter last After-Sales service date
VP002	Write VIN
VP004	Microphone test
VP005	Serial connections test
VP006	Audio connections test
VP011	Computer calibration and commissioning

GETtheMANUALS.org

AC001	TELEPHONE RING TONE

NOTES	**Special notes:** With the ignition on, this command is accessible in the tool's fault finding mode (actuator command tab).

The telephone ring tone should be heard during this command.
Running this command confirms the connections between the Hands-Free Kit computer, the radio and the speakers.

PN6 auditorium radio

If, during this command, the telephone's ring tone cannot be heard, disconnect the **40-track** Hands-Free Kit computer connector and the **transparent, 15-track** top of the range radio connector to check **the insulation, continuity and absence of interference resistance** on the following connections:

Hands-Free Kit computer 40-track connector		**Top of the range radio 15-track connector**
Track 35	→	**Track 28**
Track 36	→	**Track 30**
Track 37	→	**Track 29**

Repair if necessary.

NR5 mid-range radio

If, during this command, the telephone's ring tone cannot be heard, disconnect the **40-track** Hands-Free Kit computer connector and the **green 6-track** NR5 radio connector to check **the insulation, continuity and absence of interference resistance** on the following connections:

Hands-Free Kit computer 40-track connector		**NR5 radio Green 6-track connector**
Track 35	→	**Track 7**
Track 36	→	**Track 5**
Track 38	→	**Track 9**

Repair if necessary.

AFTER REPAIR	Repeat the conformity check from the start.

GETtheMANUALS.org

AC001 **CONTINUED**	

If the command remains mute after this step, check the continuity of the connections between the top of the range radio and the speakers by operating the radio. If it remains mute, disconnect the radio ISO B 8-track connector to check the insulation, continuity and absence of interference resistance on the following connections:

Top of the range radio 8-track connector		**Speakers**
Track 1	→	**+ rear right-hand**
Track 2	→	**- rear right-hand**
Track 3	→	**+ front right-hand**
Track 4	→	**- front right-hand**
Track 5	→	**+ front left-hand**
Track 6	→	**- front left-hand**
Track 7	→	**+ rear left-hand**
Track 8	→	**- rear left-hand**

Repair if necessary.

AFTER REPAIR	Repeat the conformity check from the start.

GETtheMANUALS.org

AC002	HIGH-PITCHED TONE

NOTES	**Special notes:** With the ignition on, this command is accessible in the tool's fault finding mode (actuator command tab).

A high-pitched tone should be heard during this command.
Running this command confirms the connections between the Hands-Free Kit computer, the radio and the speakers.

PN6 auditorium radio

If, during this command, the telephone's ring tone cannot be heard, disconnect the **40-track** Hands-Free Kit computer connector and the **transparent, 15-track** top of the range radio connector to check **the insulation, continuity and absence of interference resistance** on the following connections:

Hands-Free Kit computer 40-track connector		**Top of the range radio 15-track connector**
Track 35	→	**Track 28**
Track 36	→	**Track 30**
Track 37	→	**Track 29**

Repair if necessary.

NR5 mid-range radio

If, during this command, the telephone's ring tone cannot be heard, disconnect the **40-track** Hands-Free Kit computer connector and the **green 6-track** NR5 radio connector to check **the insulation, continuity and absence of interference resistance** on the following connections:

Hands-Free Kit computer 40-track connector		**NR5 radio Green 6-track connector**
Track 35	→	**Track 7**
Track 36	→	**Track 5**
Track 38	→	**Track 9**

Repair if necessary.

AFTER REPAIR	Repeat the conformity check from the start.

GETtheMANUALS.org

AC002 **CONTINUED**	

If the command remains mute after this step, check the continuity of the connections between the top of the range radio and the speakers by operating the radio. If it remains mute, disconnect the radio ISO B 8-track connector to check the insulation, continuity and absence of interference resistance on the following connections:

Top of the range radio 8-track connector		**Speakers**
Track 1	→	**+ rear right-hand**
Track 2	→	**- rear right-hand**
Track 3	→	**+ front right-hand**
Track 4	→	**- front right-hand**
Track 5	→	**+ front left-hand**
Track 6	→	**- front left-hand**
Track 7	→	**+ rear left-hand**
Track 8	→	**- rear left-hand**

Repair if necessary.

AFTER REPAIR	Repeat the conformity check from the start.

GETtheMANUALS.org

AC003	LOW-PITCHED TONE

NOTES	**Special notes:** With the ignition on, this command is accessible in the tool's fault finding mode (actuator command tab).

A low-pitched tone should be heard during this command.
Running this command confirms the connections between the Hands-Free Kit computer, the radio and the speakers.

PN6 auditorium radio

If, during this command, the telephone's ring tone cannot be heard, disconnect the **40-track** Hands-Free Kit computer connector and the **transparent, 15-track** top of the range radio connector to check **the insulation, continuity and absence of interference resistance** on the following connections:

Hands-Free Kit computer 40-track connector		**Top of the range radio 15-track connector**
Track 35	→	**Track 28**
Track 36	→	**Track 30**
Track 37	→	**Track 29**

Repair if necessary.

NR5 mid-range radio

If, during this command, the telephone's ring tone cannot be heard, disconnect the **40-track** Hands-Free Kit computer connector and the **green 6-track** NR5 radio connector to check the **insulation, continuity and absence of interference resistance** on the following connections:

Hands-Free Kit computer 40-track connector		**NR5 radio Green 6-track connector**
Track 35	→	**Track 7**
Track 36	→	**Track 5**
Track 38	→	**Track 9**

Repair if necessary.

AFTER REPAIR	Repeat the conformity check from the start.

GETtheMANUALS.org

AC003 **CONTINUED**	

If the command remains mute after this step, check the continuity of the connections between the top of the range radio and the speakers by operating the radio. If it remains mute, disconnect the radio ISO B 8-track connector to check the insulation, continuity and absence of interference resistance on the following connections:

Top of the range radio 8-track connector		**Speakers**
Track 1	→	**+ rear right-hand**
Track 2	→	**- rear right-hand**
Track 3	→	**+ front right-hand**
Track 4	→	**- front right-hand**
Track 5	→	**+ front left-hand**
Track 6	→	**- front left-hand**
Track 7	→	**+ rear left-hand**
Track 8	→	**- rear left-hand**

Repair if necessary.

AFTER REPAIR	Repeat the conformity check from the start.

GETtheMANUALS.org

VP004	MICROPHONE TEST

NOTES	**Special notes:** With the ignition on, this command is accessible in the tool's repair mode (parameter setting tab). To perform this test, the technician must be seated in the driver's seat and speak **normally**.

Running this command confirms the following connections:

HFK computer ⟶ Microphone ⟶ HFK computer

The electrical connections comply if the test result displays a percentage which is equal to or above 4. If the test result displays a percentage of less than 4:
Disconnect the **40-track** Hands-Free Kit computer connector as well as the **6-track** microphone connector in order to check the **insulation, continuity and absence of interference resistance** on the following connections:

Hands-Free Kit computer 40-track connector		**Microphone 6-track connector**
Track 28	⟶	**Track 2**
Track 29	⟶	**Track 1**

Repair if necessary.

AFTER REPAIR	Repeat the conformity check from the start.

GETtheMANUALS.org

VP005	SERIAL CONNECTIONS TEST

NOTES	**Special notes:** With the ignition on, this command is accessible in the tool's repair mode (parameter setting tab).

Running this command confirms the following serial connections:

HFK computer → Telephone base plate → Test adapter → Telephone base plate → HFK computer

Before running this command, fit the test adapter (Elé. 1737) in the place of the telephone cradle.
When running this command, the Hands-Free Kit sends data via the serial connections. This data is looped back to the base plate by the test adapter, and sent on to the Hands-Free Kit which analyses it.
This data cannot be displayed. The electrical connections comply if the test result displays: **CORRECT**.
If the test result displays: **INCORRECT**, disconnect the **24-track** Hands-Free Kit computer connector as well as the **14-track** telephone cradle base plate connector in order to check the **insulation, continuity and absence of interference resistance** on the following connections:

Hands-Free Kit computer 24-track connector		**Telephone base plate 14-track connector**
Track 17	→	**Track 8**
Track 18	→	**Track 9**
Track 21	→	**Track 13**
Track 22	→	**Track 14**

Repair if necessary.

AFTER REPAIR	Repeat the conformity check from the start.

GETtheMANUALS.org

VP006	AUDIO CONNECTIONS TEST

NOTES	**Special notes:** With the ignition on, this command is accessible in the tool's repair mode (parameter setting tab).

Running this command confirms the following audio connections:

HFK → telephone base plate → Test adapter → telephone base plate → HFK → Radio → Speakers

Before running this command, fit the test adapter (Elé. 1737) in the place of the telephone cradle.
This command is confirmed by a sound from the speakers: if it is absent, carry out a continuity check on the system component connections:
Disconnect the **24-track** Hands-Free Kit computer connector as well as the **14-track** telephone cradle base plate connector in order to check for **the insulation, continuity and absence of interference resistance** on the following connections:

Hands-Free Kit computer 24-track connector		**Telephone base plate 14-track connector**
Track 3	→	**Track 2**
Track 4	→	**Track 11**
Track 6	→	**Track 3**
Track 7	→	**Track 12**

Repair if necessary.

AFTER REPAIR	Repeat the conformity check from the start.

GETtheMANUALS.org

COMMUNICATION FAULT

NO DIALOGUE WITH THE COMPUTER — **ALP 1**

GETtheMANUALS.org

ALP1	No dialogue with the computer

NOTES	Before applying this procedure, check that the radio is working.

Check the conformity of the battery voltage (**10 V < X < 14.4 V**).
If the voltage is not correct, run fault finding on the battery and the charge circuit.

Check that the fuses are in good condition: F23 of 10A (+ 12 V accessories feed), F28 of 20A (+ 12 V after ignition feed) and F50 of 20A (+ 12 V before ignition feed): see wiring diagram.

Check:
– the connection between the diagnostic tool and the diagnostic sensor (lead in good condition),
– the connection between the diagnostic head and the diagnostic socket (wiring in good condition).
Repair if necessary.

Check that there is **+ 12 V before ignition feed** on **track 16**, **+ 12 V after ignition feed** on **track 1** and an earth on **tracks 4 and 5** of the vehicle's diagnostic socket.
Repair if necessary.

Test the diagnostic tool on another vehicle (to make sure the tool is not the problem).
Repair if necessary.

Check **the continuity, insulation and absence of interference resistance** on the connections to check the conformity of the Hands-Free Kit computer feeds and earths.

40-track HFK computer connector

Track 6	→	**+ 12 V accessories feed**
Track 4	→	**+ 12 V battery feed**
Track 7	→	**+ 12 V after ignition feed**
Track 9	→	**Earth**
Track 11	→	**Radio (see diagram for the radio fitted on the vehicle)**
Track 14	→	**Radio (see diagram for the radio fitted on the vehicle)**
Radio (see diagram for the radio fitted on the vehicle)	→	**Track 12 (diagnostic socket)**
	→	**Track 13 (diagnostic socket)**

Repair if necessary.

If the fault is still present, contact the Techline.

GETtheMANUALS.org

VEL SATIS

8 Electrical equipment

86C MULTIMEDIA SYSTEM

Video system	86C - 1
Infrared remote control	86C - 4
Video controls	86C - 6
Video screen	86C - 8
Anti-theft code	86C - 9
Self-test procedure	86C - 10
Customer complaints	86C - 11
Fault finding chart	86C - 12

BJ0E - BJ0J - BJ0K - BJ0M - BJ0P - BJ0V

77 11 311 302 **FEBRUARY 2006** **EDITION ANGLAISE**

"The repair procedures given by the manufacturer in this document are based on the technical specifications current when it was prepared.

The methods may be modified as a result of changes introduced by the manufacturer in the production of the various component units and accessories from which his vehicles are constructed."

All rights reserved by Renault s.a.s.

Copying or translating, in part or in full, of this document or use of the service part reference numbering system is forbidden without the prior written authority of Renault s.a.s.

© Renault s.a.s. 2006

GETtheMANUALS.org

GENERAL INFORMATION

The video system for the rear seats consists of:
– a DVD player located under the rear seat base,
– a video control (A) behind the rear face of the console with an on/off button as well as headset and accessory sockets,
– a screen attached to a fold-out motor,
– a **top of the range** radio,
– an infrared remote control for the controls.

The video system can play DVDs, audio CDs, or take input from accessories (game consoles, video cameras etc.).

Diagram

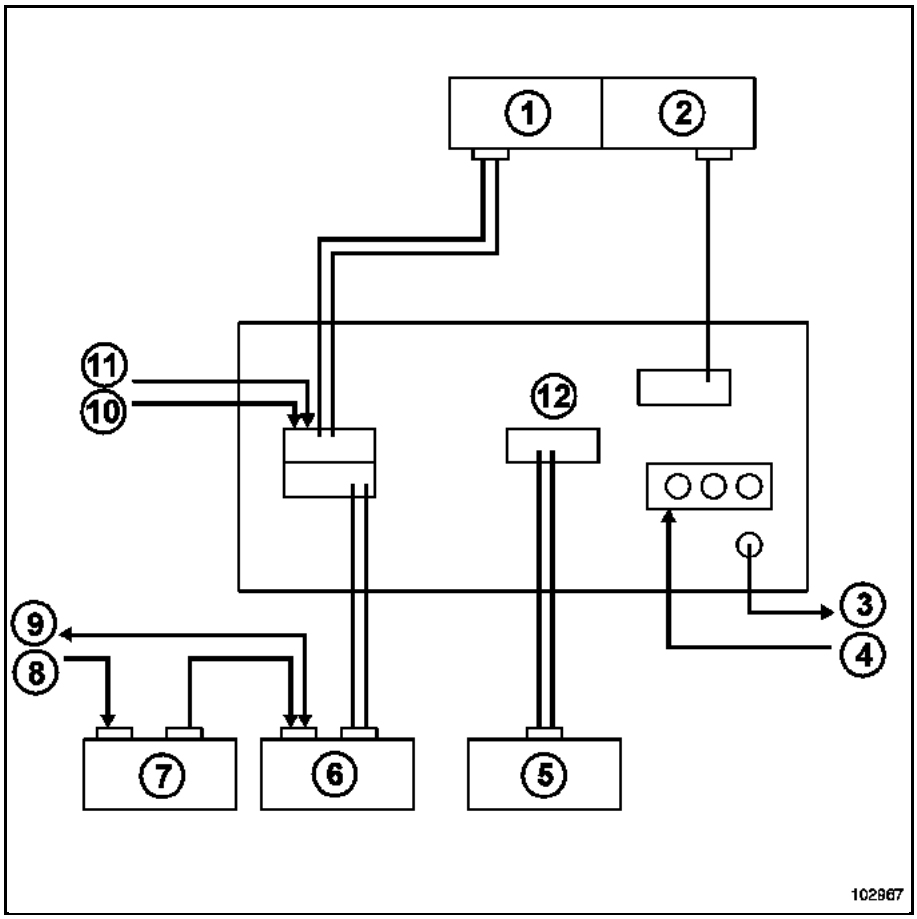

1 Retractable case
2 Screen
3 Headset socket
4 Accessories input
5 DVD player
6 Tuner-amplifier
7 CD changer
8 + battery feed,
9 Vehicle signal (+ accessories, + after ignition feed)
10 + battery feed
11 Vehicle signal (+ accessories, + after ignition feed)
12 Video controls

GETtheMANUALS.org

For repairs, the system has a built-in self-test menu, see **self-test**. Never try to repair a system component. Malfunctioning components must be replaced.

GETtheMANUALS.org

OPERATION

The battery voltage must be between **11** and **15 V** for the system to operate correctly. Outside of that range, it will only function for a limited time or not at all.

In high temperatures, its operation is impaired or impossible.

For the system to work, the card must be in the **+ accessories** position. Press the on/off button on the video or remote control to fold out the screen.

Once the power to the **+ accessories** system is cut off, the screen automatically retracts after a few seconds.

The system is protected by a four digit code. This code can be changed; see **Anti-theft code**. After the power is cut off, the code must be entered each time.

The system has a self-test function.

MENU

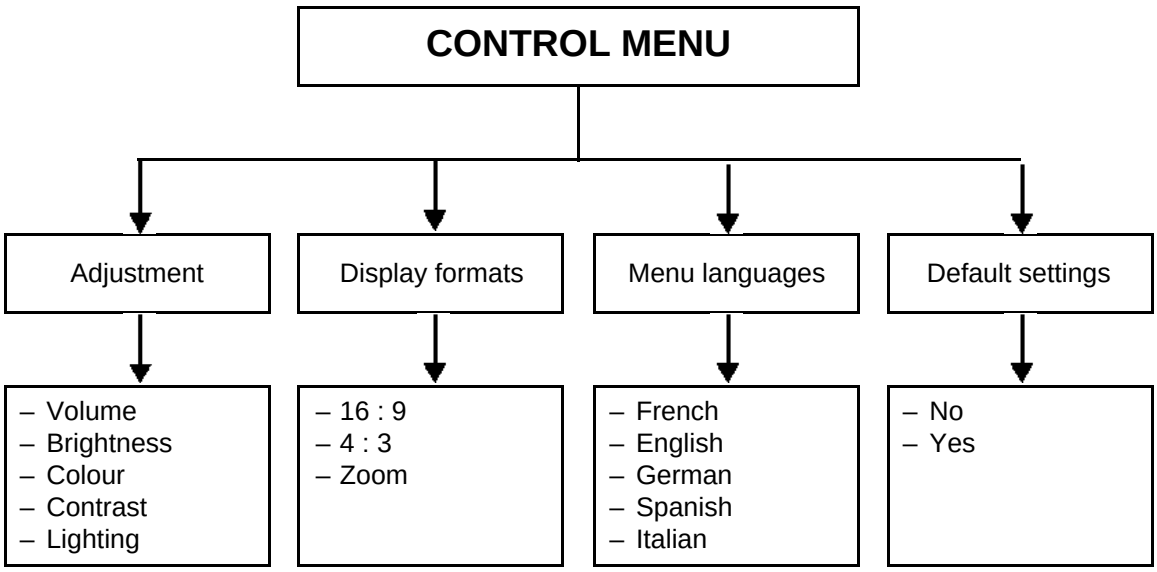

GETtheMANUALS.org

DESCRIPTION OF THE REMOTE CONTROL:

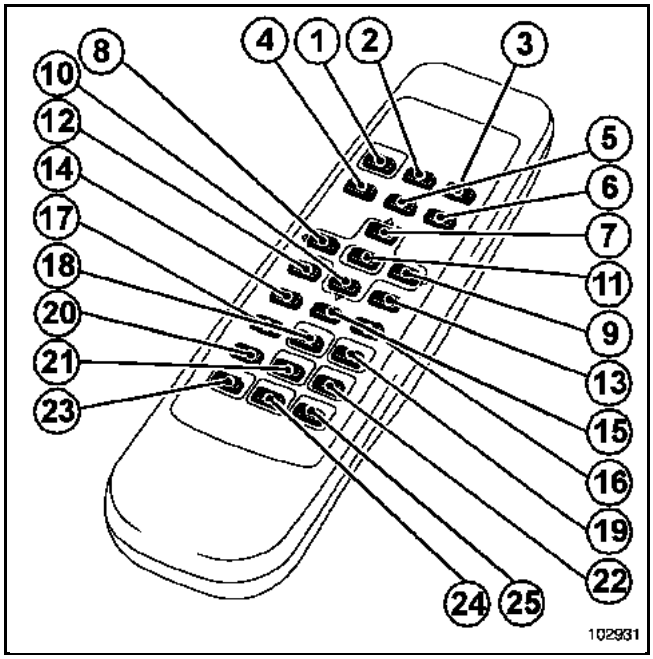

1 System on/off
2 Screen tilt control
3 Screen on and off
4 Access to control configuration menus
5 Video input selection
6 Access to video system menus
7 Menu navigation control
8 Menu navigation control
9 Menu navigation control
10 Menu navigation control
11 Confirmation key
12 Image format and zoom selector
13 Numeric keypad access
14 DVD soundtrack language selection
15 Control to adjust volume, brightness, contrast, etc.
16 Control to adjust volume, brightness, contrast, etc.
17 DVD subtitles language selection
18 Fast rewind
19 Fast forward
20 DVD camera angle selection
21 Skip to previous track
22 Skip to next track
23 Stop player
24 Freeze frame
25 Normal DVD or audio CD play

The remote control is not coded, so is interchangeable with another vehicle (Espace).

To operate the system with the remote control, point it at one of the infrared sensors on the controls or on the CD changer on the front of the dashboard.

Some functions such as subtitling, camera angle, zoom or language are not accessible. They depend on the DVD menu.

GETtheMANUALS.org

CONNECTION

14-track connector (to video control)

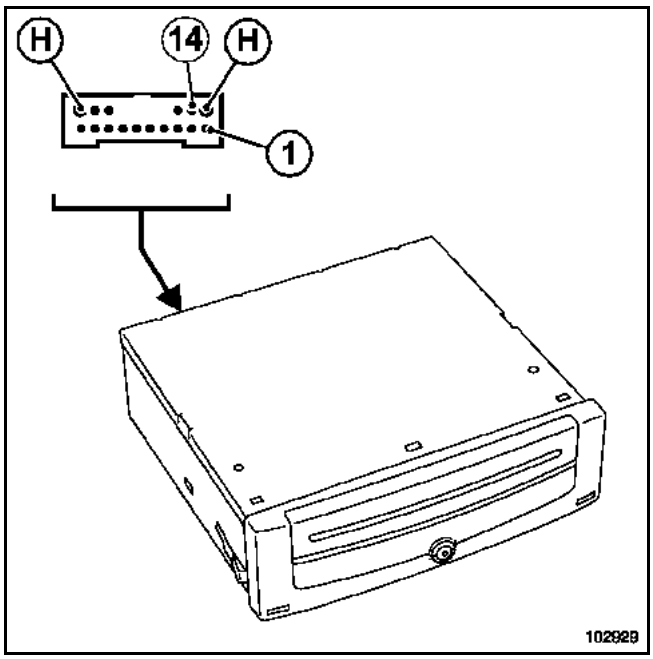

The system's resistance can be controlled:
– resistance of Y signal: **75 Ω** between connections 34CP and 34CQ,
– resistance of C signal: **75 Ω** between connections 34CS and 34CT,
– resistance of audio outputs: **100 kΩ** between connections 34CK and 34CL and between connections 34CM and 34CN.

See Technical Note wiring diagrams, Velsatis, code 1280.

Note:
The 2 big clips on the connectors are guides (H).

GETtheMANUALS.org

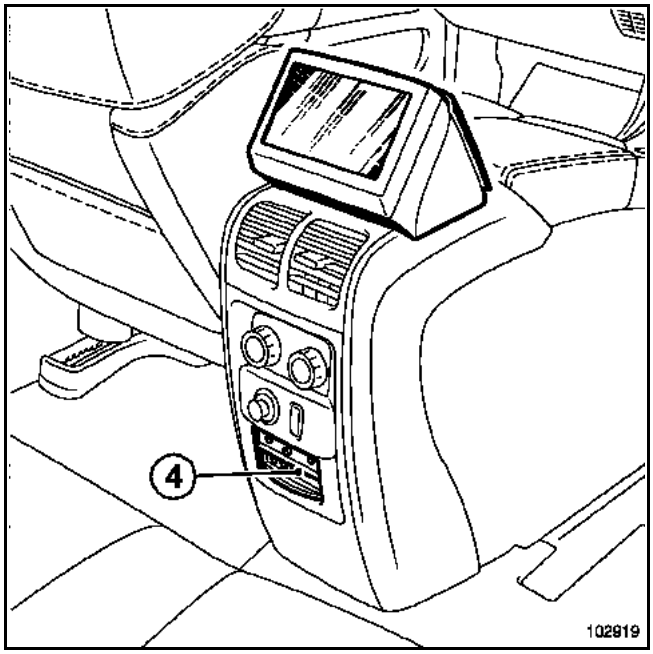

The video control (**4**) is the only part of the system protected by a code (see **Anti-theft code**).

The controls have a self-test mode (see **Self-test procedure**).

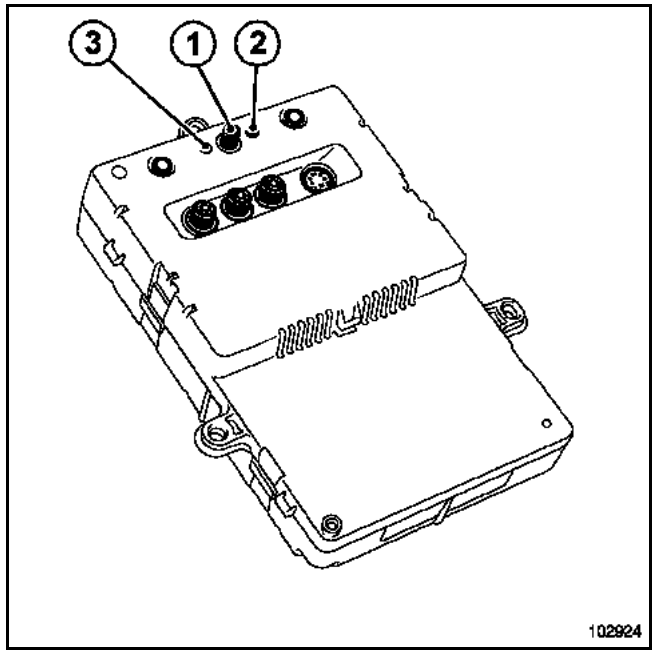

The controls consist of:
– an on/off switch (**1**),
– the operation indicator light (**2**),
– an infrared receiver (**3**),
– two headset sockets (right and left),
– audio and video accessory inputs.

GETtheMANUALS.org

CONNECTION

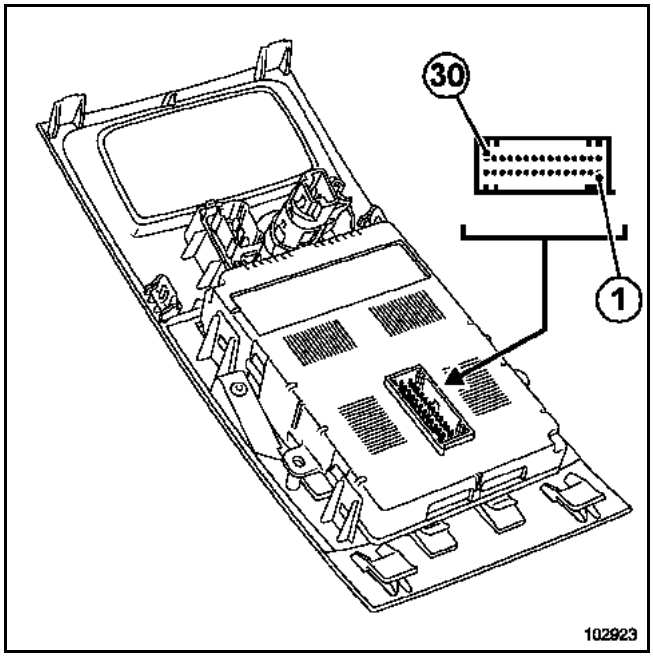

See Technical Note wiring diagrams, Velsatis, code 1273.

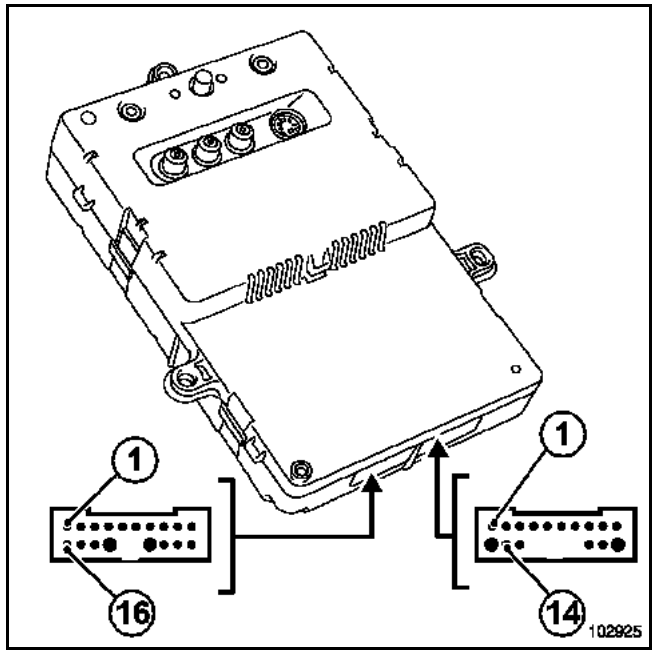

Screen on/off control
– off: **0 V**
– on: **12 V**

The brightness output should be between **0** and **5 V**.

GETtheMANUALS.org

CONNECTION

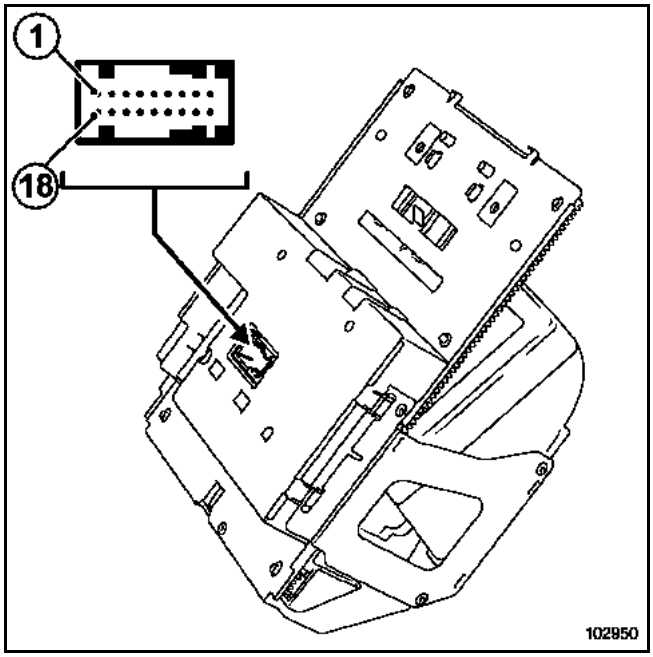

See Technical Note wiring diagrams, Velsatis, code 1303.

GETtheMANUALS.org

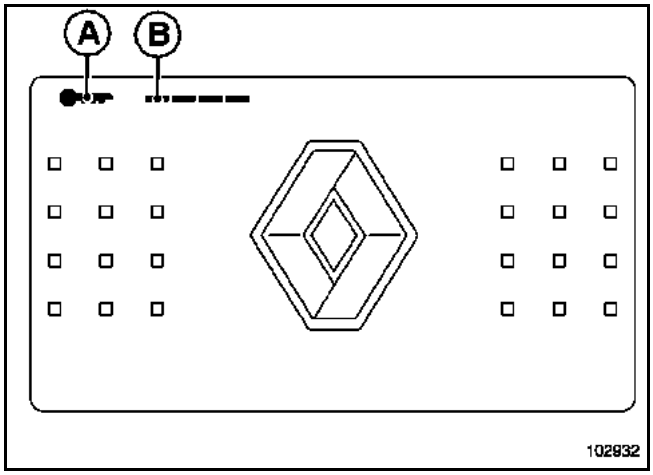

A Lock indicator key:
– White key: system locked after power cut off. Enter anti-theft code.
– Red key: system locked after five failed attempts to enter code. Perform unlocking procedure.
B Numeric keypad to enter code (for dashes, press **Shift** on the remote control).

Procedure for entering the anti-theft code

– Turn on the control unit (screen folds out and displays RENAULT badge and white key) (**A**)).

– Press **Shift** on the remote control to display the dashes (**B**).

– Enter the four digit code then confirm.

Note:
The system locks after 5 failed attempts to enter the code.

Unlocking procedure:

– Turn on the control unit. The badge and red key (**A**) appear,

– press **Shift** on the remote control. The dashes (**B**) appear on the screen,

– enter 6401 (which is the code for all the video controls),

– the control generates a four-digit code (numerical), if the code only has 2 digits, add two 0 digits (e.g.: 24 → 0024),

– go to the server of the VIN code and the code generated by the video control. In the Return video control code menu, enter the VIN and the code. The server will give the unlocking code,

– press Shift on the remote control. The dashes (**B**) appear on the screen,

– enter the unlocking code,

– the control displays New Code, enter a new code (for example, the radio code to prevent several codes being used), enter the code twice,

– the video control is unlocked and operational (key no longer displayed).

GETtheMANUALS.org

SELF-TEST

Press **Shift** 6 times to access the numeric keypad.

The code for launching the test is **1046**.

Diagnostic messages now start displaying on the screen, or the indicator light flashes:

– **1 flash** of the indicator light and message **1** Running self-test is displayed.

– **2 flashes** of the indicator light and message **2** Controls out of order is displayed.

– **3 flashes** of the indicator light and message **3** DVD player out of order is displayed.

– **4 flashes** of the indicator light and message **4** Retractable unit out of order is displayed.

– **5 flashes** of the indicator light and message **5** Self-test completed is displayed.

– **6 flashes** of the indicator light and message **6** No fault is displayed.

Note:
Each time a button on the remote control is pressed, the indicator light on the control unit should flash.

GETtheMANUALS.org

NO SOUND FROM RADIO SPEAKERS	ALP 1
VOLUME INCREASES SUDDENLY	ALP 2
NO IMAGE (BLACK SCREEN) - OR SCREEN FROZEN ON WELCOME PAGE	ALP 3
NO IMAGE CHANGE WHEN LIGHTS SWITCHED ON	ALP 4
SCREEN DOES NOT FOLD OUT	ALP 5
REMOTE CONTROL DOES NOT WORK	ALP 6

IMPORTANT
The faults may often be bugs in the video system software. For example, frozen image, faulty display or sound etc. This type of fault can often be fixed simply by disconnecting the video system and reconnecting a few seconds later (with the controls connector or battery).
Carry out this operation before checking the wiring harness and before replacing a system component.
Similarly, rule out any disc faults: damaged disc, unrecognised format (the player cannot read MP3 or DIV X files, non-Region 2 DVDs, or some burned discs). To make sure it is a system fault, try another disc before any removal or fault finding procedure.

GETtheMANUALS.org

ALP 1	No sound from radio speakers

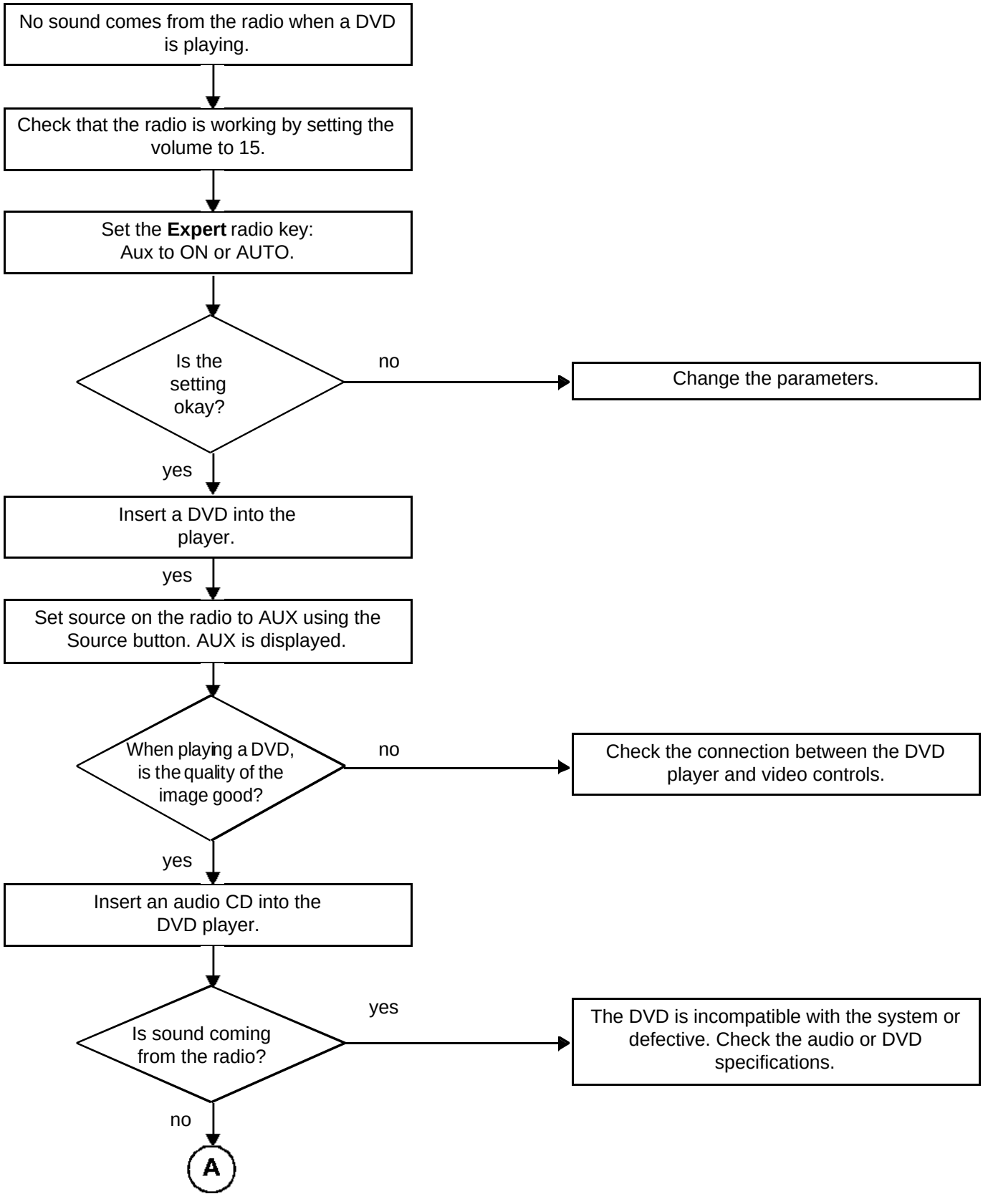

GETtheMANUALS.org

ALP 1

CONTINUED

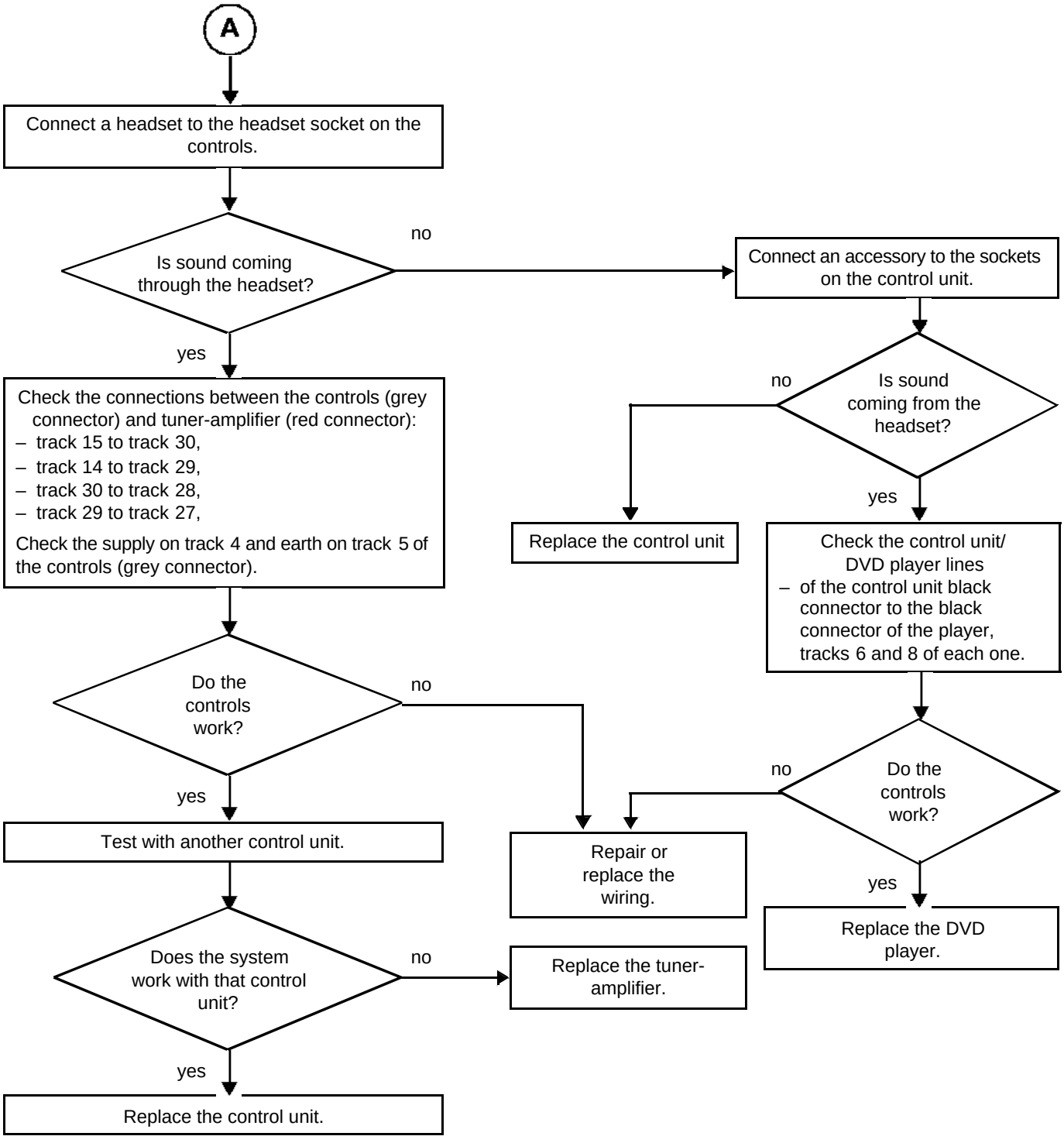

GETtheMANUALS.org

ALP 2	The volume increases suddenly

The sound increases suddenly or with the vehicle's speed

↓

Check the radio settings

↓

The settings can be adjusted after a long press on the **Expert** button on the front of the CD changer

↓

Select **Speed**, volume adjustment in accordance with speed

↓

Select the desired speed curve:
– SPEED 0: no adjustment
– SPEED 5: maximum adjustment.

↓

Confirm with the **Expert** button

GETtheMANUALS.org

ALP 3	No image (black screen - blue screen - or screen frozen on welcome page)

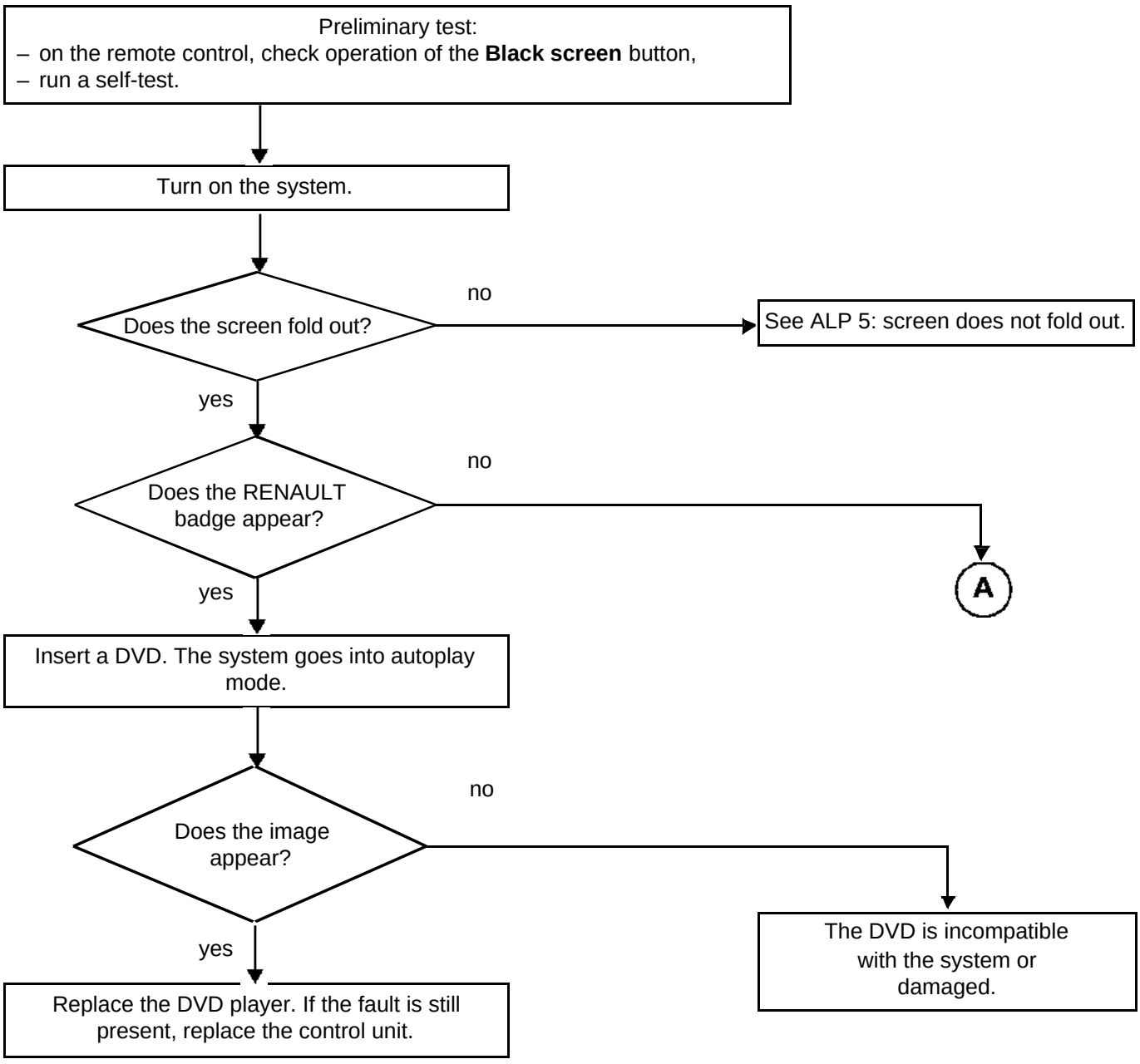

GETtheMANUALS.org

ALP 3 CONTINUED	

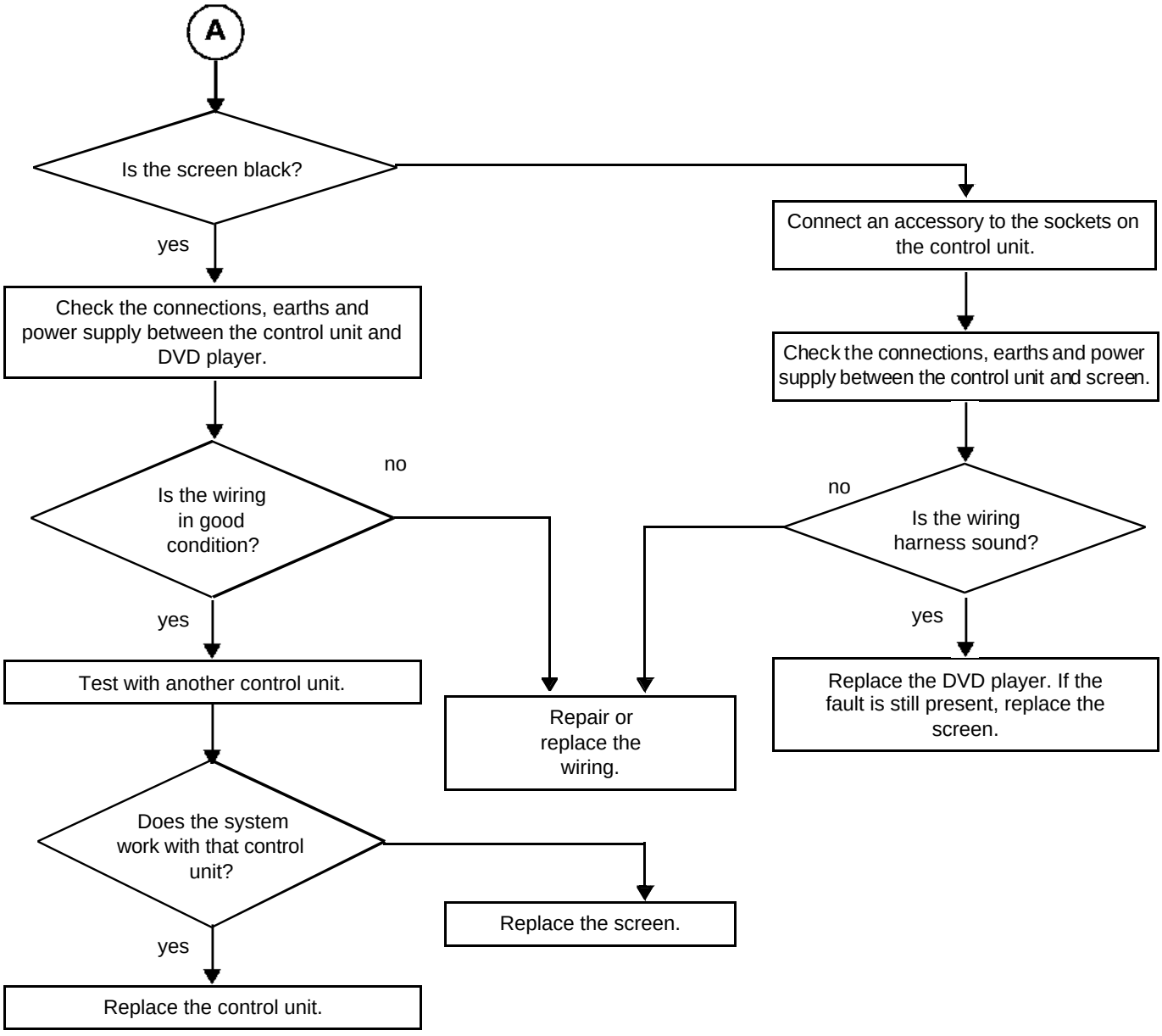

GETtheMANUALS.org

ALP 4	No image change when lights switched on

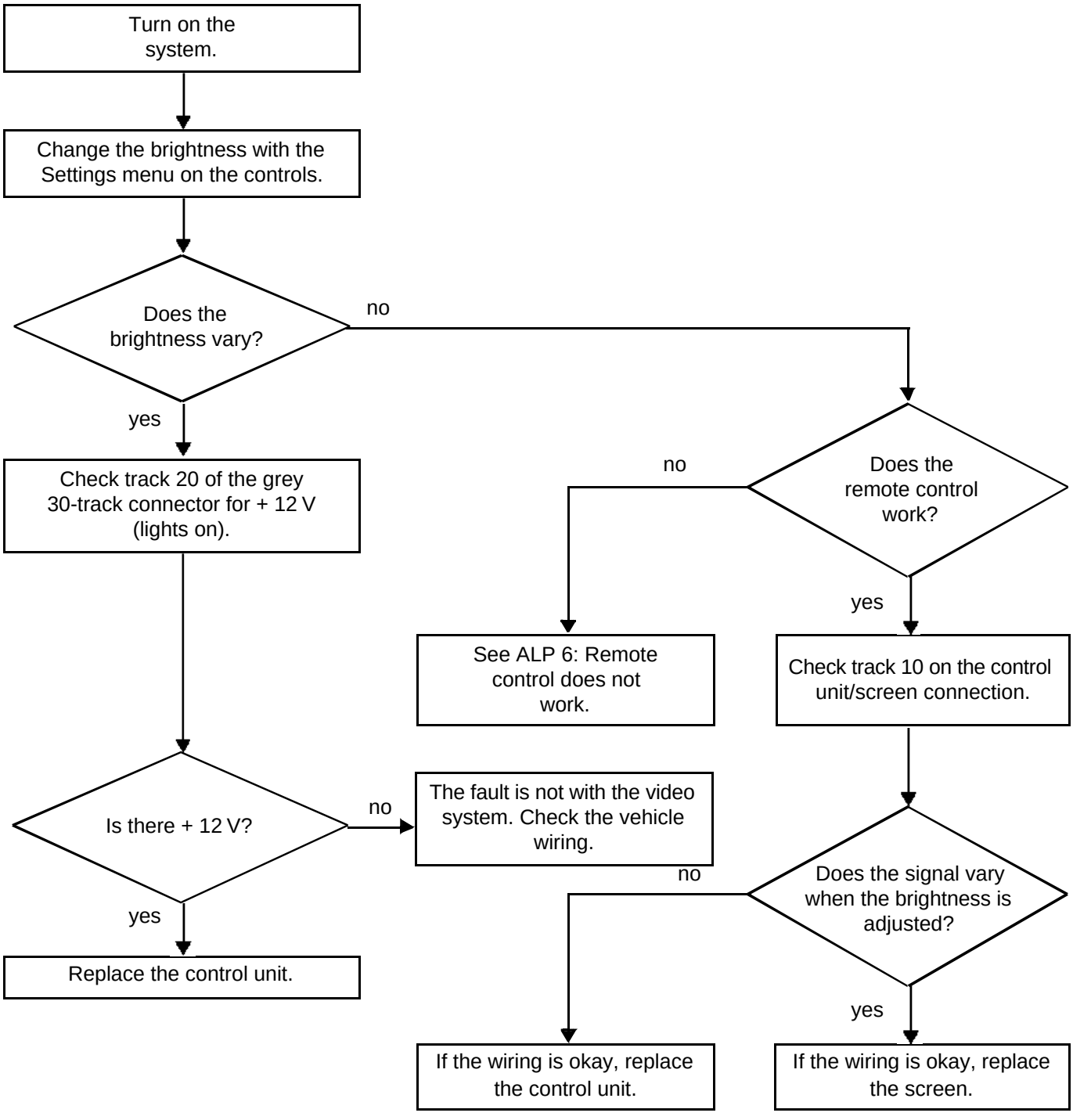

GETtheMANUALS.org

ALP 5	Screen does not fold out

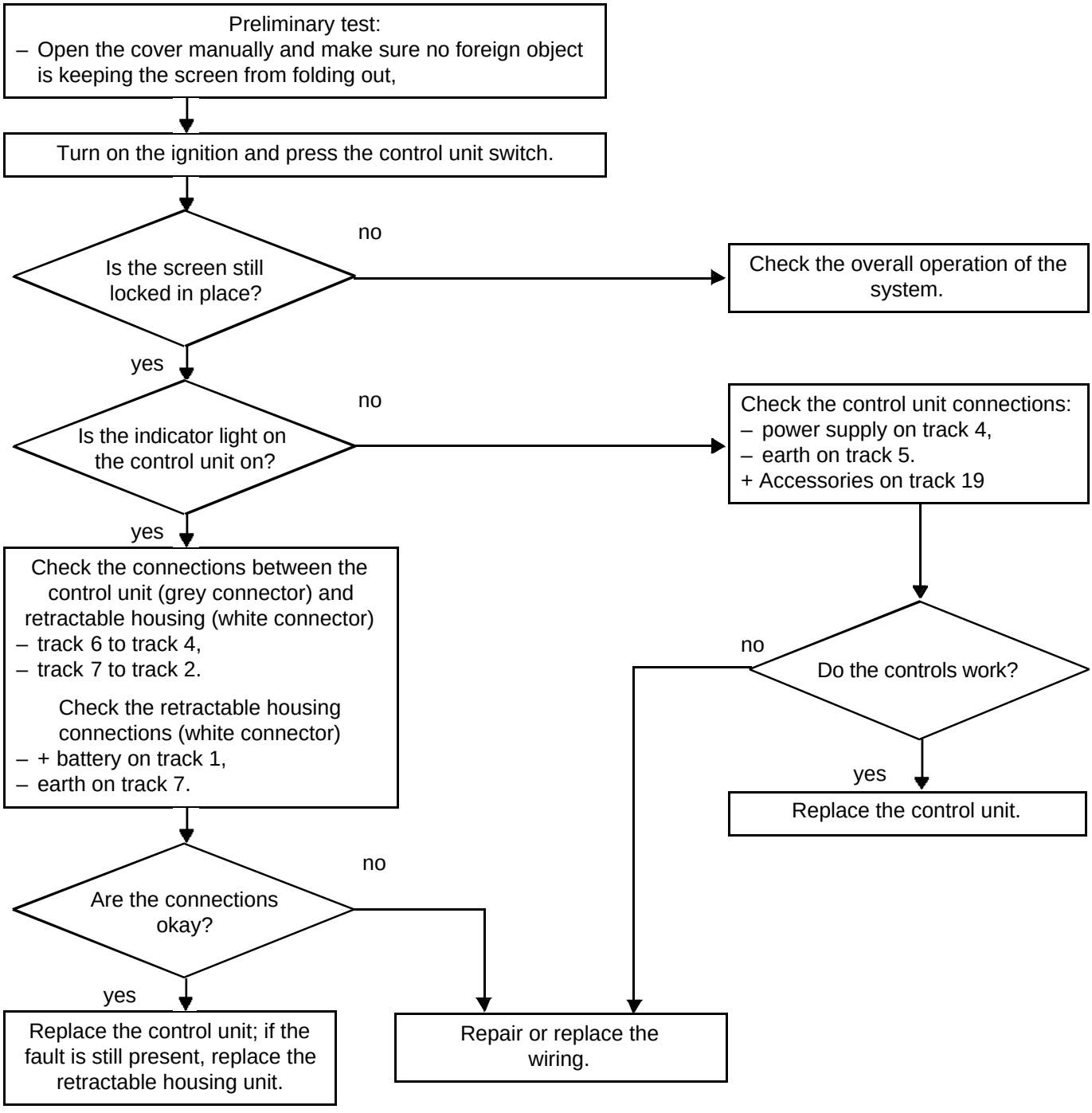

GETtheMANUALS.org

ALP 6	The video system remote control does not work (occasionally or not at all)

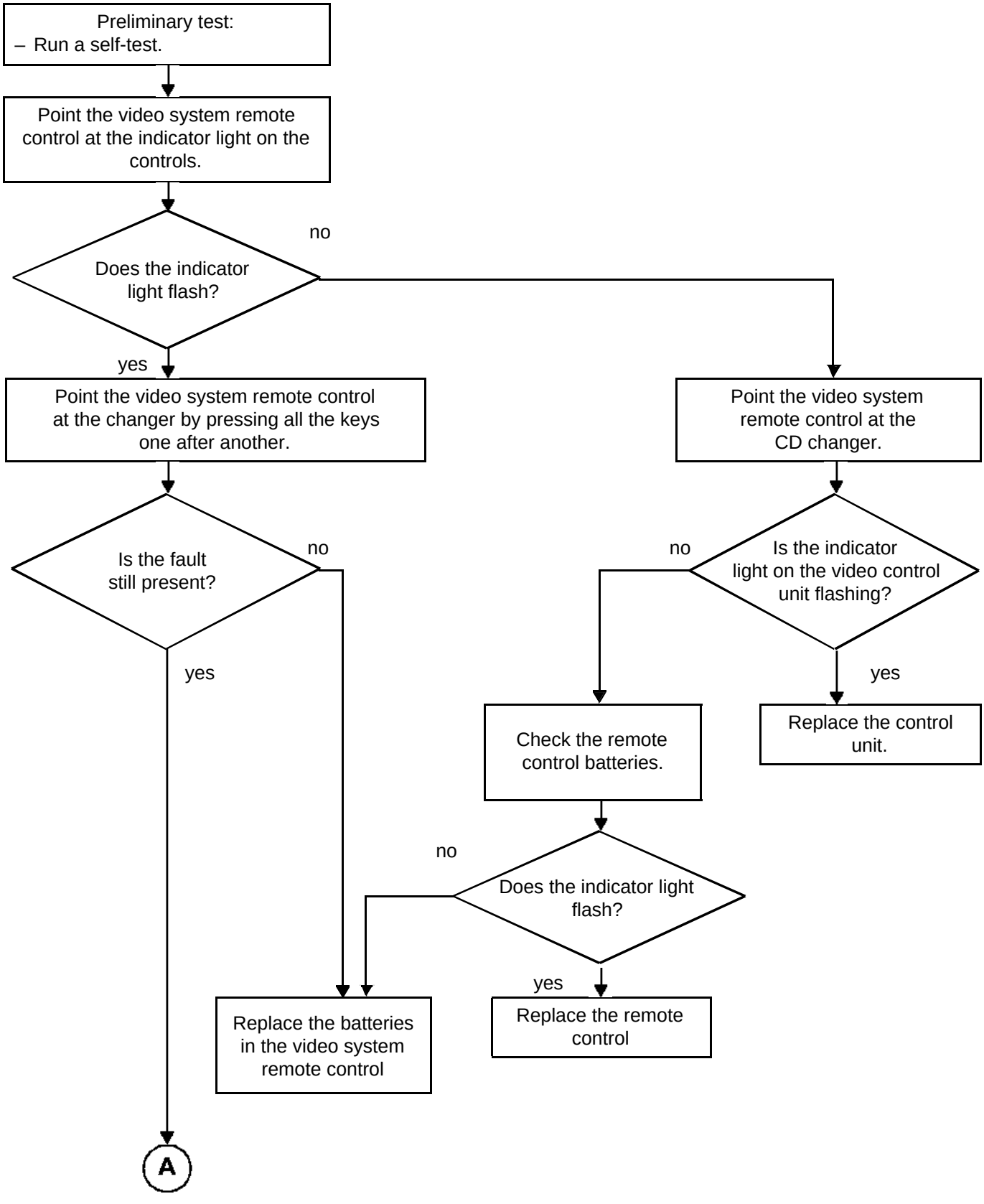

GETtheMANUALS.org

ALP 6 CONTINUED	

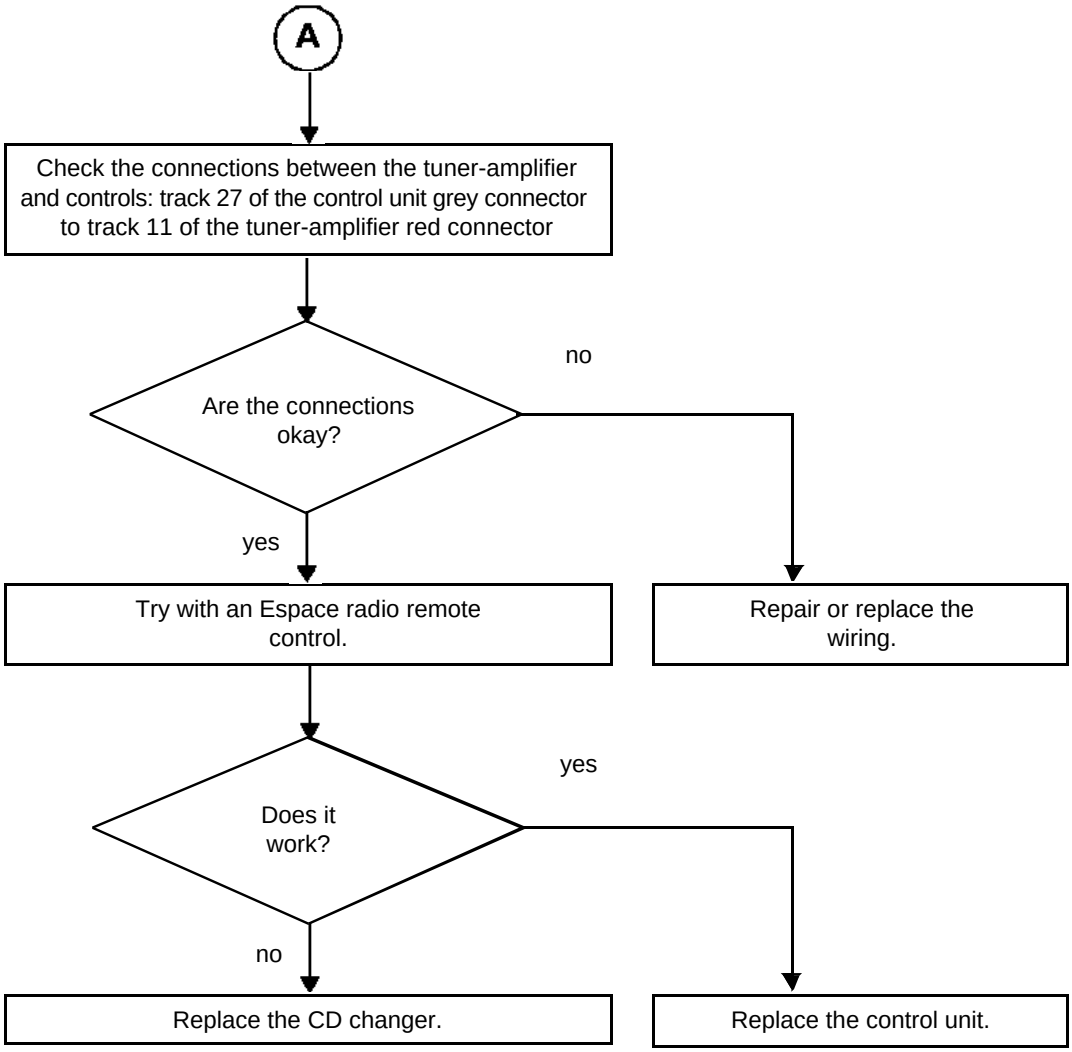

GETtheMANUALS.org

VEL SATIS

8 Electrical equipment

87B PASSENGER COMPARTMENT CONNECTION UNIT

UCHProgram No.: 0090Vdiag No.: 08, 10

Fault finding - Introduction	87B - 2
Fault finding - System operation	87B - 4
Fault finding - Replacement of components	87B - 10
Fault finding - Configurations and programming	87B - 12
Fault finding - Fault summary table	87B - 19
Fault finding - Interpretation of faults	87B - 21
Fault finding - Conformity check	87B - 54
Fault finding - Status summary table	87B - 70
Fault finding - Interpretation of statuses	87B - 72
Fault finding - Parameter summary table	87B - 105
Fault finding - Interpretation of parameters	87B - 106
Fault finding - Command summary table	87B - 107
Fault finding - Dealing with command modes	87B - 108
Fault finding - Customer complaints	87B - 113
Fault finding - Fault finding charts	87B - 119

V2 **Edition Anglaise**

"The repair procedures given by the manufacturer in this document are based on the technical specifications current when it was prepared.

The procedures may be modified as a result of changes introduced by the manufacturer in the production of the various component units and accessories from which his vehicles are constructed."

All rights reserved by Renault s.a.s.

Copying or translating, in part or in full, of this document or use of the service part reference numbering system is forbidden without the prior written authority of Renault s.a.s.

© Renault s.a.s. 2007

GETtheMANUALS.org

This generic fault finding applies to the Vel Satis passenger compartment connection unit function. It covers the wiping and lighting functions of the UCH.
The values given in this Technical Note are only indications.
It is essential to use:
The vehicle wiring diagram.
The section in the MR describing the procedure for your vehicle.

DESCRIPTION OF THE FAULT FINDING STAGES

FAULT CHECKING:

It is essential to start with this stage before any work is carried out on the vehicle.

1 - Order of priority

Deal with electrical faults that are present first, then stored electrical faults. Other priorities are dealt with in the NOTES section in the fault finding procedure for the fault in question. Always check the condition of the battery before starting battery fault finding. If the battery voltage is too low, it may disrupt the computer.

2 - Fault

a) Present:

Deal with the fault following the procedure described in **INTERPRETATION OF FAULTS**

b) Stored:

Note the faults displayed.
Follow the notes in the "NOTES" section of the fault in question.

If the fault is confirmed in the Notes section:
The fault is present once again. In this case, deal with the fault.

If the fault is not confirmed by the Notes section:
Carry out basic checks. Check:
– the electrical lines which correspond to the fault,
– the connectors for these lines (for oxidation, bent pins, etc.),
– the resistance of the component detected as faulty,
– the wiring protection (insulation melted or cut, friction, etc.).

3 - Absence of faults:

If no more faults are indicated by the diagnostic tool, carry out a conformity check. This may help in detecting a fault.

GETtheMANUALS.org

CONFORMITY CHECK

The aim of the conformity check is to check statuses and parameters that do not produce a fault display on the diagnostic tool when they are outside the permitted tolerance values. Therefore, this stage is used to:

perform fault finding on faults that do not have a fault display, and which may correspond to a customer complaint.
check that the UCH is operating correctly, and that there is no risk of a fault recurring shortly after repair.

This section gives the fault finding procedures for statuses and parameters and the conditions for checking them.

If a status is not behaving normally or a parameter is outside the permitted tolerance values, consult the corresponding fault finding page.

CORRECT DIAGNOSTIC TOOL TEST

If the test with the diagnostic tool is correct but the customer complaint is still present, the fault should be treated by **customer complaints**.

CHANGING A UCH

After a UCH has been replaced, the **computer must be configured**.

Refer to the **configuration section of this MR** and the **configuration section for power-assisted steering, engine immobiliser and opening elements** and **tyre management**.

For vehicles fitted with UCH VDIAG 10, the duration of the + 12 V after ignition feed is **3 minutes**. To change this time to **1 hour**, switch on the ignition and run a multiplex network test with CLIP. CLIP will automatically send a command to the computer.

There is one other possible way to change this time to **1 hour**:

with the ignition on and starting conditions not met, press and hold the engine Start/Stop button for 5 seconds.

After **1 hour**, repeat this operation if necessary.

GETtheMANUALS.org

IMMOBILISER FUNCTION:

This concerns an engine immobiliser system that recognises a RENAULT card with a random rolling code (V3 encryption).
There is no longer a security code but a repair code allocated to the vehicle for life during manufacture:
– there are no numbers on the RENAULT Card,
– at the time of delivery, the vehicle does not have a label showing the code.
When working on the system, the repair code number can be requested from the local assistance network.

When requesting the code number, it is essential to provide the vehicle identification number as well as its production number. This enables the operator to identify the vehicle in order to provide the correct code.

RENAULT Cards are fitted with a backup key (1) enabling the door to be opened in the event of an operating fault.
Replacement RENAULT Cards are supplied non-coded and without an emergency metal insert.
A green cover is fitted in the place of the backup key.
When replacing a RENAULT card, replace the green cover with the customer's backup key and fit the green cover on the faulty RENAULT card in case it is returned for analysis.

Note:
A backup key can be ordered from the Parts Department by quoting the vehicle security number.
This system can have up to four Renault Cards.
The remote control function and the battery have no effect on the immobiliser.
The **Basic** and **Hands-Free** RENAULT Cards are different and not interchangeable.
They cannot be used on a vehicle not set up for them.
In the event of a card being stolen or lost or upon the customer's request, a RENAULT Card can be de-allocated from a vehicle. It can be reallocated to the same vehicle if necessary.

Indicator light table:

Warning light illumination	Instrument panel message	Ignition on	Possible cause
Flashing	**Apply brakes + Start or declutch**	**No**	**Immobiliser on (no card recognised by reader)**
Flashing	**Reader out of order or card not detected**	**No**	**Unknown card in reader. The card does not correspond to the vehicle or has been de-allocated.**
Flashing	**Steering not locked or card not recognised**	**No**	**Faulty electric steering column lock or multiplex connection.**
Permanently on	**Faulty injection -** Faulty immobiliser	**Yes**	**The electric steering column lock is unlocked.** There is a fault with the vehicle injection system.
On permanently (3 seconds) then off		**Yes**	**Starting the engine**

GETtheMANUALS.org

KEYLESS VEHICLE
This function is divided into three sub-functions: Access, Protection and Starting
It has the following changes:

Scenario with the Vel-Satis:

	Access function (locking/unlocking)	Starting function
Scenario	Pressing the card buttons	Insertion of the card in the reader, pressing the Start/Stop button. Automatic transmission conditions: – in P or N. Manual gearbox conditions: – neutral or clutch fully depressed.

Table showing the way in which presses on the card are managed and their associated actions:

Press on the RENAULT Card		Effect on the locks	Operation of the direction indicators	Operation of the side repeaters	Operation of the audible warning
Closing	1 short press	Central door locking	2 flashes	2 flashes	-
	2 short presses	Deadlocking of opening elements	Rapid flashing	Rapid flashing	-
	1 long press****	Closing of the windows and sunroof*	2 flashes	Rapid flashing	-
	Hands-free mode	Central door locking	2 flashes	Continuously lit for approximately 10 seconds	1 signal (configurable)
Opening	1 short press	Unlocking of the doors and luggage compartment or the driver's door**	1 flash	1 flash	-
	2 short presses	Unlocking of the doors and luggage compartment***	-	-	-
	Hands-free mode	Unlocking of the doors and luggage compartment or the driver's door**	1 flash	1 flash	-

*: for this function, the vehicle must be fitted with one-touch electric windows and anti-pinch sunroof.
**: some right-hand drive vehicles may be fitted with "Driver's door only" unlocking. This function allows the driver's door and luggage compartment only to be unlocked by pressing the RENAULT Card briefly.
***: unlocking of doors and tailgate for vehicles fitted with "Driver's door only" unlocking.
****: on some right-hand drive versions, this function is preceded by deadlocking.

GETtheMANUALS.org

The keyless vehicle system includes:

A Renault card.
A radio frequency receiver integrated into the card reader.
An electronic controller integrated into the UCH.
An engine start push-button.
The door locks.
A red "Door locked" indicator light.
The vehicle direction indicators.
The injection computer.
The clutch pedal sensors and gearbox neutral position sensors.
The electric steering column lock.

Basic system operation.

When the immobiliser system is operational, the engine immobiliser red indicator light flashes (slow flashing: once per second).
The electric steering column lock is locked.
The immobiliser is activated a few seconds after the ignition is switched off.
Once the **RENAULT Card** is inserted into the **reader, its code** is sent to the **UCH.**
If the **code is recognised** by the **UCH**, it sends a coded signal to the **electric steering column** lock via the multiplex network.
If the **coded signal** received by the electric lock is identical to the one it has in its memory, the lock releases the steering column and sends a confirmation message to the UCH.
When the **UCH** receives this message, it applies the **+ APC** and switches off the engine immobiliser red warning light.
When the ignition is on, the UCH and the injection computer send coded signals to each other via the multiplex network.
If the signals transmitted by the **UCH** and the **injection computer match, the UCH authorises the engine to start** and the injection is unlocked.

Special cases

If the injection computer or electric steering column lock has no reference code in its memory:
the code sent to it is stored in the memory.
If the codes do not match, the system remains locked.
The red immobiliser warning light flashes (rapidly) or is continuously lit.
Refer to the indicator light table.

IMPORTANT
When the vehicle battery has a low charge, the drop in voltage caused by operating the starter could reactivate the immobiliser.
If the voltage is too low, the engine cannot be started, even by pushing the vehicle.

GETtheMANUALS.org

VARIABLE POWER-ASSISTED STEERING FUNCTION (variable PAS)

The computer that performs the variable power-assisted steering function is the UCH.
Power supply: + APC with engine running.

Operation:
The variable power-assisted steering system (variable PAS) is designed to provide greater power-assistance during parking manoeuvres than that provided by constant power-assisted steering (constant PAS), and to gradually reduce this power assistance as the vehicle speed increases. It also gives much firmer steering than constant PAS at high speed.

The variable PAS function controls the stepper motor according to the speed of the vehicle.

Hardware:

The variable PAS system consists of:
Hydraulics:
– A constant flow hydraulic pump.
– A hydraulic jack.
– A valve controlled by an electromechanical actuator.
– An oil reservoir.
– A pipe assembly (hydraulic connections, cooler).

Electrics:
– A source of electrical power.
– An integrated function in the UCH.
– Three vehicle status signals.
– An actuator.
– The diagnostic connection.
– The connection between the different electrical components (wiring).
– The vehicle signals: speed.

GETtheMANUALS.org

WIPING FUNCTION

The front and rear screen wiper functions must be disabled when the UCH is blank (unprogrammed). On the other hand, the diagnostic actuator commands are always possible.
The wiper motor (a serial motor) has a built-in electronic controller. This motor is driven by the UCH using a serial connection. The rain sensor, if it is fitted, communicates with the UCH and the motor via this serial connection.

Operation of opposite direction wipers with serial connection rain sensor:
When the + APC is activated, the UCH drives a two-way serial line via which it sends the various commands. The UCH reads the signals sent by the motor and the rain sensor.
The motor's electronics are supplied directly by the 12 V battery. The wiper commands (stop, automatic, low speed, high speed) are given by the UCH.
Position of the stalk in automatic mode:
When the combined wash/wipe stalk is in the auto position as the + APC is activated, the rain sensor is disabled. The rain sensor is activated on detection of a transmission of the automatic intermittent speed input or following a screen wash request (short or long press) with the wash/wipe stalk in automatic position. In this case, the sensor controls the motor directly using different speed requests depending on the type of rain.

Defect mode in the event of a faulty sensor:
In the event of line failure (no dialogue), on activation (start-up or auto using the control), the UCH will operate the windscreen wiper in permanent intermittent mode with a 5 second interval for the auto position of the wash/wipe stalk. In the event of line failure (no dialogue) during operation, the windscreen wiper control will retain the status of the last sensor command. This part of the defect mode is controlled by the internal electronics of the opposite direction wiper motor.

Note:
The rain sensor is optional, it may or may not be present.

GETtheMANUALS.org

LIGHTING FUNCTION

The lighting system can be broken down into three functions:
– Direction indicators and hazard warning lights.
– Sidelights, dipped beam headlights, main beam headlights and fog lights.
– Interior lighting.

Direction indicators and hazard warning lights
Direction indicators:
The unit should instruct the left-hand or right-hand direction indicator to flash depending on the order sent by the stalk.
The buzzer integrated into the instrument panel is used to replace the indicator relay.
When the vehicle is locked using the card, the UCH must power the left- and right-hand direction indicators twice for 400 ms. However, this functionality is not activated in the following cases:
– If a door is found to be open.
– If a fault in the power supply to the electric door locking motors or in the connection is detected.

Defect mode: this is requested if one of the front or rear bulbs is faulty. Defect mode is not requested if one of the bulbs of the side-mounted repeaters is defective, as it is not possible to detect this fault.

Hazard warning lights:
The control unit must make all the right- and left-hand direction indicators flash according to the command sent by the hazard warning light control (whatever the position of the direction indicator stalk), the deceleration signal sent by the ABS computer (during emergency braking) or the signal sent by the airbag computer (in the event of impact).

Sidelights, dipped beam headlights, main beam headlights and fog lights
These functions are supplied according to the position of the lighting stalk.

Automatic headlighting (sidelights and dipped beam)
The automatic headlighting function is exclusive with the running light function (activation of lights in daytime).
This function consists of automatically activating the sidelights and dipped beam headlights. The UCH receives the request from the rain/light sensor.
Switch-off request by the sensor: if the fog lights and dipped beam headlights are not being used, they are switched off at the request of the rain/light sensor.

> Note:
> The automatic headlighting function is operational as soon as the engine is detected as running.

Operation in defect mode: if the side lights and the dipped beam headlights have been activated at the request of the sensor, failure of the latter causes the light activation command to be maintained until the engine is switched off. If the failure occurs when the main beam headlights are on, the side lights and dipped beam headlights will also be maintained until the engine is switched off.

Running lights function (activation of lights in daytime)
When the lighting stalk is in the park position, with + APC on, detection that the engine is running causes activation of the side lights and dipped beam headlights. The lights are turned off when the engine stops.

Fog light ring
Operation of the fog light ring is independent of the positions of the lighting stalk and lighting ring. The UCH receives the front and rear fog pulse inputs when there is a + 12 V supply.

GETtheMANUALS.org

New parts are not coded. When fitted to the vehicle, they must be programmed with a code to make them operational.

To perform this procedure, certain vehicle components must already be correctly coded (refer to the following allocation table).

IMPORTANT
Once a part is programmed with a code, it is allocated to the vehicle; the code cannot be deleted and the part cannot be reprogrammed with another code. The programmed code cannot be erased.

AFTER-SALES OPERATION	STATUS OF COMPONENTS				REPAIR CODE NEEDED
	UCH	**RENAULT Card**	**Injection computer**	**Electric steering column lock**	
Programming the **UCH**	Blank	Programmed	Programmed	-	YES
Programming the **RENAULT card**	Programmed	Blank*	Programmed	Coded	YES
Programming the **injection computer**	Programmed	Programmed	Blank	Coded	NO
Programming the **electric steering column lock**	Programmed	Programmed	-	Blank	NO

*: The RENAULT card allocated to a vehicle must be blank or already programmed on this vehicle.
NOTE: These may be programmed on a vehicle but not yet operational (not assigned).

GETtheMANUALS.org

REPLACEMENT OF THE UCH:

A new **UCH** is not coded. When fitted to the vehicle, it must be programmed with a code to make it operational.
To perform this procedure, you must have at least one of the old RENAULT Cards for the vehicle, plus the repair code, and the injection computer must be correctly coded.

IMPORTANT
Once a code has been programmed into the **UCH**, it is allocated to the vehicle and it is not possible to program the UCH with another one.

Manually enter the VIN code on the first page of the Clip tool.
Run the Multiplex network test.
The tool displays Vehicle configuration unknown:
Check the undetected or unrecognised computers.
Click on OK.
In the screen with the list of computers, click on continue.
Select UCH then click on Run fault finding.
Click on the repair mode and on the program menu.

After replacing the **UCH**, the new one must be programmed. Run command **SC004 Program UCH** (see **Configuration and programming**).

REMINDER: only the RENAULT cards submitted during the allocation process will be operational. To allocate the cards to the vehicle, run the **SC010 Program cards** command.

Note:
After each replacement of the **UCH**, carry out the configurations associated with the functions available on the vehicle. Functions not configured will not be operational.
To perform the configurations (see **Configuration and programming**).

WARNING
After each replacement of the UCH, do not forget to program the electric windows (see **Configuration and programming**), and to re-enter the radio and navigation codes.

REPLACEMENT OF THE ELECTRIC STEERING COLUMN LOCK:

A new **steering column lock** is not coded. It will therefore be important to program it with a code to make it operational.
To perform this procedure, you must have at least one of the old RENAULT Cards for the vehicle, and a **UCH** already coded on the vehicle.

Note:
When replacing the steering column lock (see MR 402 Fittings 82A Electrical, Immobiliser, Removal - Refitting steering column lock).

Note:
WHENEVER REPLACING THE COMPUTER, PERFORM A VIN ENTRY OPERATION (perform the VP004 configuration operation).

GETtheMANUALS.org

CONFIGURATIONS

NOTES	**These configuration operations must be carried out every time a UCH is replaced and must be checked during every fault finding procedure.**

Index	Title	Features and comments
CF 010 LC001	**Hands-Free function**	**With or without**
CF011 LC005	**Gearbox type**	**Manual gearbox or automatic transmission** With manual or automatic transmission
CF012 LC006	**Rain detector**	**With or without**
CF014 LC008	**Daytime running lights**	**With or without** Warning, do not configure without checking the vehicle specification and the wiring used, otherwise this may not work.
CF020 LC014	**Type of driving style**	**Right-hand or left-hand** With right-hand drive or left-hand drive
CF023 LC017	**Tyre Pressure Monitor Function**	**With or without** Tyre Pressure Monitor function.
CF024 LC018	**Hazard warning lights switched on by ABS**	**With or without** (In certain countries such as the UK, automatic hazard warning lights during emergency braking are forbidden)
CF032 LC025	**See-me-home lighting:**	**With or without**
CF 033 LC026	**Electric child safety lock**	**With or without**
CF088 LC049	**Automatic door locking warning beep**	**Without, 1, 2, 3, 4 or 5** This configuration is used to adjust the buzzer volume. The buzzer is activated when the vehicle is locked using the hands-free function.
CF089 LC050	**Driver's seat position memory**	**With** or **without**
CF090 LC003	**Deadlocking**	**With** or **without**
CF094 LC037	**Automatic seat position recall**	**With** or **without**

GETtheMANUALS.org

NOTES	**These configuration operations must be carried out every time a UCH is replaced and must be checked during every fault finding procedure.**

Index	Title	Features and comments
CF098 **LC028**	**Card locking**	**With** or **without**
CF099 **LC031**	**Card reminder warning buzzer**	**With** or **without**
CF106 **LC046**	**Interior lighting**	**With** or **without**
CF107 **LC047**	**Courtesy light, timer**	**With** or **without**
CF108 **LC040**	**Automatic locking when driving**	**With** or **without**
CF115 **LC056**	**Opening element locking/ unlocking mode**	**Driver** or **4 doors** When the card is pressed, the driver's door only or all four doors can be unlocked. Important: this configuration depends on the vehicle type.
CF116 **LC048**	**Hands-free locking**	With or without
CF119 **LC036**	**Hands-free door unlocking mode**	**Driver** or **4 doors** When in hands-free mode, the driver's door only or all four doors can be unlocked. **IMPORTANT** This configuration depends on the vehicle type.
CF120 **LC057**	**Automatic window closing(using the card)**	With or without automatic window closing function (with card)
CF170 **LC059**	**Overspeed function - Arabia**	**With** or **without overspeed alarm**
CF131 **LC060**	**Voice synthesiser**	**With** or **without voice synthesiser (activates monitoring of brake stop light and side light faults)**
CF133 **LC062**	**Power-assisted steering strategy**	**Strategy No. 1**
CF134 **LC063**	**Type of power-assisted steering**	**Basic** or **variable**
CF169 **LC068**	**Automatic headlighting**	**With** or **without** If the vehicle is fitted with a rain sensor, the function can be configured. Once it has been configured, it is activated or deactivated by flashing the **dipped beam headlights** twice
LC028	**Card locking**	**With** or **without**

GETtheMANUALS.org

MATCHING THE VALVE TO THE TYRE

Each sensor is matched to a wheel during vehicle manufacture (when the UCH is programmed with the identification codes). This is necessary so that a faulty wheel can be identified, as the receiver cannot determine the position of the wheel transmitting.

Changing wheels over without programming the valve codes is **PROHIBITED**. If the wheels are changed over on the vehicle, replace the valve rings at the location described below:
Front left-hand: green
Rear left-hand: red
Front right-hand: yellow
Rear right: black

IF THE CUSTOMER WISHES TO SWAP THE WHEELS OVER, THERE ARE TWO POSSIBLE SOLUTIONS:
– Either remove each sensor and then replace it in its original position on the vehicle;
– Or, using the diagnostic tool, reprogram the UCH with the new sensor positions (the coloured rings must be swapped over so that they are in the correct order, as shown above).

How do you find the sensor codes?

There are three possible solutions:
– **The sensor is new:** it has a two-part label, one of which is detachable. The code is written on both parts. The detachable part is used to remind the operator of the code after fitting the sensor on the wheel (it is advisable to temporarily affix this label to the wheel where the sensor is fitted).
– **If the sensor has already been used:** if removed with the label still attached on top, its code can be read.
– **The sensor is already fitted to the wheel and no label is visible:**

In this case:
– Either remove the tyre and read the number on the sensor,
– Or acquire the sensor codes with the diagnostic tool. The difficulty is that each sensor only transmits once every hour when stationary. Furthermore, if more than one sensor is fitted, it is not possible to determine which sensor sent the signal. In this case:
– Either run the wheel at over 12 mph (20 km/h) so that the sensor transmits more often and can therefore be noted (wheel balancer, driving with just one wheel fitted).
– Or force the sensor to transmit using the valve exciter (The code feedback and valve status changes to "Status 1").

GETtheMANUALS.org

GENERAL INFORMATION

The engine immobiliser protection system is controlled by a RENAULT card recognition system with random rolling code.

A coded transponder chip key (operating without a battery) independent of the remote control function is built into each of the vehicle's RENAULT Cards.

The engine immobiliser is active a few seconds after the RENAULT Card is removed from the card reader. When the RENAULT card is removed from the reader, the red warning light flashes on the instrument panel and the steering column lock locks.

To obtain the immobiliser code, see **Technical Note 5037A, Code delivery procedure, 82A, Immobiliser**.

There are two programming methods: "Not connected" to the code server mode and "connected" to the code server mode.
– In the "not connected" mode, the CLIP diagnostic tool supplies a programming key and the user enters the immobiliser code.
– In the "connected" mode, the CLIP diagnostic tool automatically changes the programming key and the immobiliser code.

IMPORTANT
If not all of the Renault cards are available, reallocate all Renault cards later. Cards not inserted will no longer be allocated to this vehicle.

IMPORTANT
In "not connected" mode, once the tool has issued the programming key, the user has a limited amount of time in which to enter the immobiliser code.
If this time expires, the Clip **diagnostic tool** displays the message **Time expired. Restart the procedure**.

Note:
If just the UCH is being replaced. There are no operations to be carried out on the injection computer or on the steering column lock. The injection computer and the steering column lock keep the same immobiliser code.

IMPORTANT
Once a part is programmed with a code, it is allocated to the vehicle; the code cannot be deleted and the part cannot be reprogrammed with another code. The programmed code cannot be erased.

IMPORTANT
In "connected" mode, changing of the programming key and entry of the immobiliser code is carried out automatically.
If the connection parameters are not met, the "connected" mode switches automatically to the "not connected" mode.

GETtheMANUALS.org

SC004	PROGRAMMING THE UCH

Equipment required
CLIP

The role of this command is to code the UCH.

Use this command only with a new and blank UCH.

A new UCH is not coded and is therefore not assigned to the vehicle; once it is fitted on the vehicle, it must be programmed to assign it to the vehicle.

To carry out this programming operation, you will need to have:
– **a card belonging to the vehicle** (allocated to the old UCH).

Before starting this operation, make sure that there are no components capable of interfering with the electromagnetic field (e.g.: CB (Citizen Band), mobile phone, etc.).

Note:
After an injection computer has been replaced, there are no operations to be performed on the UCH. It retains the same immobiliser code.

Note:
After only the UCH has been replaced, there are no operations to be performed on the injection computers. The computers keep the same immobiliser code.

IMPORTANT
When the UCH programming procedure is successfully completed, the UCH is no longer blank and is permanently assigned to the vehicle. It will not work on another vehicle.

IMPORTANT
When the programming operation is complete, only remove the key once the message **Programming complete** is displayed on the screen. Otherwise, programming has failed and the UCH cannot be used.

AFTER REPAIR	Carry out a fault finding procedure on the system. Clear the stored faults. Deal with any other faults.

GETtheMANUALS.org

SC004 **CONTINUED**	

IMPORTANT
– Do not interrupt the procedure when it is in progress.
– If it is interrupted, restart the procedure; a new programming key will be displayed.

UCH programming procedure

– Establish dialogue with the UCH.
– Select the menu **repair mode**.
– Select the menu **secure programming**.
– Select the line **S0004 Program UCH**.

Follow the instructions given by the **Clip diagnostic tool**.
In "not connected" mode, when the **Clip diagnostic tool** displays the programming key, make a note of this key and the VIN.
To obtain the immobiliser code, see **Technical Note 5037A, Code delivery procedure, 82A, Immobiliser**.

IMPORTANT
In "not connected" mode, the programming key has a limited life span, as indicated by the **Clip diagnostic tool**. After this time has expired, the programming key and its associated immobiliser code are no longer valid. The operation must be restarted from the beginning.

Operations to be carried out after programming the UCH

- Enter the vehicle VIN in the computer using the command **VP004 Enter VIN**.
- \After programming the UCH, allocate all of the cards using the command **SC010 Card allocation**.
- Configure the equipment which may or may not be present on the vehicle, using the commands (see **Configurations and programming**).

AFTER REPAIR	Carry out a fault finding procedure on the system. Clear the stored faults. Deal with any other faults.

GETtheMANUALS.org

SC010	CARD ALLOCATION

Equipment required
CLIP

IMPORTANT
It is not possible to allocate more than two blank cards per operation. If there are more than 2 blank cards to be allocated: allocate 2 blank cards, then restart the procedure with all the cards.

IMPORTANT
Only cards which have been ordered for the vehicle concerned or the vehicle's old cards can be inserted.

IMPORTANT
– Do not interrupt the procedure when it is in progress
– If it is interrupted, restart the procedure; a new programming key will be displayed.

– Run the **Multiplex network** test.
– Establish dialogue with the UCH.
– Select the menu **repair mode**.
– Select the menu **secure programming**.
– Confirm the line **SC010 card allocation**.

The card allocation procedure takes place in two parts:
1 Card insertion stage.
2 Card allocation stage.

Card insertion stage:
The Clip diagnostic tool asks you to insert the keys to be allocated. Insert ALL the cards to be allocated (old and new blank cards), any cards not inserted at this stage will be rejected in the **Card allocation** stage and the operation will have to be restarted from the beginning. Once all the cards have been inserted, **the Clip diagnostic tool** displays the programming key. To obtain the immobiliser code, see **Technical Note 5037A, Code delivery procedure, 82A, Immobiliser**.

IMPORTANT
In "not connected" mode, the programming key has a limited life span, as indicated by the Clip **diagnostic tool**. After this time has expired, the programming key and its associated immobiliser code are no longer valid. The operation must be restarted from the beginning.

Card allocation stage:
Continue the procedure, following the instructions given by **the Clip diagnostic tool**.
– Once the cards have been allocated, make sure that all the cards can lock and start the vehicle.

With this system it is not possible to replace some components, such as the UCH and the Renault card as these parts are sold blank and uncoded. These components cannot be coded when replaced unless they have the vehicle's original code stored.

AFTER REPAIR	Carry out a fault finding procedure on the system. Clear the stored faults. Deal with any other faults.

GETtheMANUALS.org

Tool fault	Diagnostic tool title
DF001	UCH
DF002	Steering column lock
DF003	Clutch switch circuit
DF011	Rain/light sensor circuit
DF028	Driver's seat position memory connection
DF031	One-touch window connection
DF037	Striker plate relay control circuit
DF040	Rear screen wiper park position
DF055	Card present switch circuit
DF056	Card fully inserted switch circuit
DF057	UCH → card reader connection
DF058	Neutral switch circuit
DF059	Card reader → steering column lock connection
DF060	+ 12 V after ignition feed relay control circuit
DF061	+ 12 V accessories feed relay control circuit
DF062	Starter relay control circuit
DF063	Child safety function
DF066	Multiplex network
DF078	Locking relay control circuit
DF079	Unlocking relay control circuit
DF080	Interior lighting relay control circuit
DF081	Door unlocking button circuit
DF086	Rear screen wiper relay
DF087	Side lights relay control circuit
DF088	Dipped headlights relay control circuit

GETtheMANUALS.org

DF001 PRESENT OR STORED	UCH 1.DEF: Internal electronic fault

NOTES	Insert the card fully into the reader.

Switch off the ignition.
Disconnect the battery to initialise the **UCH**.
If the fault is still present, contact the Techline.

AFTER REPAIR	Reconfigure the UCH.

GETtheMANUALS.org

DF002 PRESENT OR STORED	STEERING COLUMN LOCK 1.DEF: Unidentified electrical fault

NOTES	Insert the card fully into the card reader to unlock the steering column. Withdraw the card from the reader to relock the column. Carry out fault finding on the engine immobiliser.

If the fault is stored:
Disconnect the battery to initialise the **UCH**.
If the fault is still stored, contact the Techline.

If the fault is present:
Replace the column lock. When replacing the **steering column lock (MR 402 Mechanical, 82A Immobiliser, Removal - Refitting steering column lock)**.
WARNING
The steering column lock is secured with a reverse thread bolt (left-hand thread). Furthermore, it can only be removed if it has been released beforehand.

AFTER REPAIR	Carry out fault finding on the system Clear the fault memory. Deal with any other faults.

GETtheMANUALS.org

DF003 PRESENT OR STORED	CLUTCH SWITCH CIRCUIT CC : Short circuit CO : Open circuit

NOTES	**Special notes:** Switch on the ignition.

Check **the insulation, continuity and the absence of interference resistance** on the following connections:

switch **track A1** ⟶ **track 26** UCH black connector

(check the connection between the passenger compartment wiring loom and the engine wiring).

Check the earth **track B3** of the switch.

Remove the switch and press the circuit breaker.

IMPORTANT

There may be two clutch switches (one for the injection and one for the UCH).
The status of the clutch switch passes to active.
Replace the switch if it is faulty.

Check that the switch is properly mounted on the clutch pedal.

AFTER REPAIR	Carry out a fault finding procedure on the system. Clear the fault memory. Deal with any other faults.

GETtheMANUALS.org

DF011 PRESENT OR STORED	RAIN/LIGHT SENSOR CIRCUIT

NOTES	Switch on the ignition and the wipers to intermittent speed to confirm the fault.

Check the supply to the rain sensor (earth on **track 2**; + after ignition feed on **track 1**).
Check the **continuity and insulation** of the following connections: UCH **Track 23** black connector ⟶ **Track 3** rain/light sensor
If the fault is still present, replace the rain/light sensor.
If the fault is still present, contact the Techline.

AFTER REPAIR	Carry out a fault finding procedure on the system. Clear the fault memory. Deal with any other faults.

GETtheMANUALS.org

DF028 PRESENT OR STORED	DRIVER'S SEAT POSITION MEMORY CONNECTION CO.1 : Open circuit or short circuit to + 12 V

NOTES	**Special notes:** Switch on the ignition.

Check the **continuity and insulation** of the following connections:

UCH **track 32** white connector → **track A8** driver's seat computer black connector

UCH **track 32** white connector → **track 27** front passenger window winder

If the fault is still present, contact the Techline.

AFTER REPAIR	Carry out a fault finding procedure on the system. Clear the fault memory. Deal with any other faults.

GETtheMANUALS.org

DF031 PRESENT OR STORED	ONE TOUCH WINDOW CONNECTION CO.1 : Open circuit or short circuit to + 12 V

NOTES	**Special notes:** Switch on the ignition.

For each anti-pinch electric window, check **the continuity and insulation** between:

Check the **continuity and insulation** of the following connections:

UCH **track 22** black connector → **track 6** window winder

OR for anti-pinch electric windows with stored door mirror position:

UCH **track 22** → **track 27driver's** electric window

If the fault is still present contact Techline.

OR for the anti-pinch sunroof:

UCH **track 22** → **track 9** sunroof

If the fault is still present, contact the Techline.

AFTER REPAIR	Carry out a fault finding procedure on the system. Clear the fault memory. Deal with any other faults.

GETtheMANUALS.org

DF037 PRESENT OR STORED	STRIKER PLATE RELAY CONTROL CIRCUIT CC.1 : Short circuit to + 12 V

NOTES	**Special notes:** Open the tailgate and confirm the fault.

Check the power supply to the tailgate striker plate: + battery feed on **track 2** of the striker plate. Earth on **track 1** of the striker plate.
Check the **continuity and insulation** of the following connections: tailgate striker plate **track 3** ⟶ **track 34** UCH white connector
Repair if necessary.
Open the tailgate and measure the voltage on striker plate connector **track 3**. If the voltage is around **12 V**, replace the tailgate striker plate.
If the fault is still present contact Techline.

AFTER REPAIR	Carry out a fault finding procedure on the system. Clear the fault memory. Deal with any other faults.

GETtheMANUALS.org

DF040 PRESENT OR STORED	REAR SCREEN WIPER PARK POSITION

NOTES	**Special notes:** Switch on the ignition, activate the rear screen wiper.

Switch on the rear screen wipers.
Check whether status **ET097** Rear park position is active every time the wiper arm reaches the idle position then switches to inactive.

Check the wiper fitting.

Check **the insulation, continuity and the absence of interference resistance** on the following connections:

UCH **track 38** black connector → **track 2** wiper motor

Earth → **track 3** wiper motor

Supply → **track 1** wiper motor

Repair if necessary.

Check that the wiper arms reach the idle position properly.

In the event of a fault, replace the rear screen wiper motor.

If the fault is still present, contact the Techline.

AFTER REPAIR	Carry out a fault finding procedure on the system. Clear the fault memory. Deal with any other faults.

GETtheMANUALS.org

DF055 PRESENT OR STORED	CARD PRESENT SWITCH CIRCUIT CO : Open circuit

NOTES	**Conditions for applying fault finding procedures to stored faults:** Insert the card fully into the reader to confirm the fault.

Insert the card halfway into the reader: check that status **ET164 Card code received** is **yes**.
Withdraw the card from the reader: check that status **ET164 Card code received** is **no**.

Connect the bornier of the UCH.

Check **the insulation, continuity and the absence of interference resistance** on the following connections:

UCH **track 12** white connector ⟶ **track 5** card reader

Check the feeds to the card reader (+ Battery feed on **track 2**, earth on **track 8**).
Measure the voltage on **track 12** of the UCH.

Voltage = **12 V**

Contact Techline.

Otherwise

Try with another card.
Replace the card reader.

AFTER REPAIR	Carry out a fault finding procedure on the system. Clear the fault memory. Deal with any other faults.

GETtheMANUALS.org

DF056 PRESENT OR STORED	CARD FULLY INSERTED SWITCH CIRCUIT CC.1 : Short circuit to + 12 V

NOTES	**Conditions for applying fault finding procedures to stored faults:** Withdraw the card from the reader to confirm the fault.

Insert the card fully into the reader: check that status **ET172 Card fully inserted** is **yes**.
Withdraw the card from the reader: check that status **ET172 Card fully inserted** is **no**.
In the event of a fault, see the interpretation of status **ET172 Card fully inserted**.

Connect the bornier of the UCH.

Check **the insulation, continuity and the absence of interference resistance** on the following connections:

UCH **track 1** white connector ⟶ **track 7** card reader

Check the feeds to the card reader (+ Battery feed on **track 2**, earth on **track 8**).
Check the voltage on the UCH track.

Voltage = **12 V**

Contact Techline.

Otherwise

Replace the card reader.

AFTER REPAIR	Carry out a fault finding procedure on the system. Clear the fault memory. Deal with any other faults.

GETtheMANUALS.org

DF057 PRESENT OR STORED	UCH → CARD READER CONNECTION 1.DEF: Unidentified electrical fault

NOTES	**Conditions for applying fault finding procedures to stored faults:** Withdraw the card from the reader to confirm the fault.

Test the **UCH → Card reader** connections, run command **SC023 Test UCH → Card reader connections** (See **Dealing with command modes**).

Check the insulation, continuity and the absence of interference resistance on the following connection:

UCH **track 19** black connector ⟶ **track 4** card reader

Repair if necessary.

If the fault is still present, contact the Techline.

AFTER REPAIR	Carry out a fault finding procedure on the system. Clear the fault memory. Deal with any other faults.

GETtheMANUALS.org

DF058 PRESENT OR STORED	NEUTRAL SWITCH CIRCUIT CC : Short circuit CO : Open circuit

NOTES	**On manual gearboxes only.** Switch on the ignition. Select neutral: the switch status must be active.

Check the insulation, continuity and the absence of interference resistance on the following connection:

switch **track 3** ⟶ **track 7** UCH black connector

Repair if necessary.

(check the connection between the passenger compartment wiring loom and the engine wiring).
Check the supply to the switch.

If the fault is still present, contact the Techline.

Remove the switch and press the circuit breaker.
The neutral switch status changes to active and then the reversing lights come on.
Replace the switch if it is faulty.

Check the fitting of the switch on the gearbox.
Replace the switch.

AFTER REPAIR	Carry out a fault finding procedure on the system. Clear the fault memory. Deal with any other faults.

GETtheMANUALS.org

DF059 PRESENT OR STORED	CARD READER → STEERING COLUMN LOCK CONNECTION 1.DEF: Unidentified electrical fault

NOTES	**Special notes:** Insert the card halfway into the card reader.

Check that status **ET164 Card code received** is **yes**.
If not, refer to the procedure for dealing with the corresponding status.

Check the insulation, continuity and the absence of interference resistance on the following connection:

electric steering column lock **track 5** ⟶ **track 5** card reader

Repair if necessary.

If the fault is still present, contact the Techline.

AFTER REPAIR	Carry out a fault finding procedure on the system. Clear the fault memory. Deal with any other faults.

GETtheMANUALS.org

DF060 PRESENT OR STORED	+ 12 V APC RELAY CONTROL CIRCUIT CC.1 : Short circuit to + 12 V 1.DEF: Unidentified electrical fault

NOTES	**Special notes:** Insert the card fully into the card reader.

Refer to the testing procedure for relay 22 **PRO1** (see ALP).

AFTER REPAIR	Carry out a fault finding procedure on the system. Clear the fault memory. Deal with any other faults.

GETtheMANUALS.org

DF061 PRESENT OR STORED	+ 12 V ACCESSORIES FEED RELAY CONTROL CIRCUIT CC.1 : Short circuit to + 12 V

NOTES	**Special notes:** Insert the card fully into the card reader.

Refer to the testing procedure for relay 22 **PRO1** (see ALP).

AFTER REPAIR	Carry out a fault finding procedure on the system. Clear the fault memory. Deal with any other faults.

GETtheMANUALS.org

DF062 PRESENT OR STORED	STARTER RELAY CONTROL CIRCUIT CC.1 : Short circuit to + 12 V

NOTES	**Special notes:** Insert the card fully into the card reader.

Refer to the testing procedure for relay 21 **PRO1** (see ALP).

AFTER REPAIR	Carry out a fault finding procedure on the system. Clear the fault memory. Deal with any other faults.

GETtheMANUALS.org

DF063 PRESENT OR STORED	CHILD SAFETY FUNCTION CIRCUIT CO.1 : Open circuit or short circuit to + 12 V 1.DEF: Data inconsistency

NOTES	**Special notes:** Switch on the ignition. Press the child safety lock switch.

CO.1

Check the insulation, continuity and the absence of interference resistance on the following connection:

UCH **track 24** white connector ⟶ **track A3** child safety button

Repair if necessary.

If the fault is still present, contact the Techline.

Check the condition and position of the central door locking fuse.

Check the connection and condition of the white **UCH** connector and the rear door central locking motor connector.

Check insulation from **12 V** and from **earth** on the following connections:

UCH white connector, **green connection strip track 21** ⟶ **Track F** of the rear left-hand door central locking motor

UCH white connector, **brown connection strip track 4** ⟶ **Track A** of the rear right-hand door central locking motor

Repair if necessary.

Check that the rear door central locking motors are working properly.
Replace them, if necessary.

If the fault is still present, contact the Techline.

1.DEF

Check that status **ET089 Electric child safety button** and statuses **ET159 Rear left-hand door electric child safety and ET160 Rear right-hand door** are active.
If not, refer to the instructions on how to deal with these statuses.

AFTER REPAIR	Carry out a fault finding procedure on the system. Clear the fault memory. Deal with any other faults.

GETtheMANUALS.org

DF066 PRESENT OR STORED	MULTIPLEX NETWORK 1.DEF: Unidentified electrical fault

NOTES	Run the multiplex network test (see **88B Multiplexing**).

AFTER REPAIR	Carry out a fault finding procedure on the system. Clear the fault memory. Deal with any other faults.

GETtheMANUALS.org

DF078 PRESENT OR STORED	LOCKING RELAY CONTROL CIRCUIT CC.1 : Short circuit to + 12 V

NOTES	**Special notes:** Switch the ignition on, then switch it off. Check that when the locking button on the card is pressed, the vehicle is locked (and in particular the fuel filler flap).

See **PRO2 Lock-unlock double relay test**.

If the fault is still present, contact Techline.

AFTER REPAIR	Carry out a fault finding procedure on the system. Clear the fault memory. Deal with any other faults.

GETtheMANUALS.org

DF079 PRESENT OR STORED	UNLOCKING RELAY CONTROL CIRCUIT CC.1 : Short circuit to + 12 V

NOTES	**Special notes:** Switch on the ignition, then switch it off. Lock the vehicle. Check that when the unlocking button on the card is pressed, the vehicle is unlocked (and in particular the fuel filler flap).

See **PRO2 Lock-unlock double relay test**.

If the fault is still present, contact the Techline.

AFTER REPAIR	Carry out a fault finding procedure on the system. Clear the fault memory. Deal with any other faults.

GETtheMANUALS.org

DF080 PRESENT OR STORED	INTERIOR LIGHTING RELAY CONTROL CIRCUIT CC.1 : Short circuit to + 12 V

NOTES	**Special notes:** Switch on the ignition.

Check the condition of the **UCH** U1 and U2 connectors and the Relay/Fuse Box connectors.
Check that the relay/fuse box is correctly positioned and connected to the **UCH**.

Check the condition **and correct positioning** of **fuse F05 (15 A)**.

Check the **insulation, continuity and the absence of interference resistance** on the following connection:

UCH black connector, green connection strip **track 31** → **Track 2** driver floor lighting connector

Passenger compartment fuse and relay box green connector, black connection strip **track 6** → **Track 1** driver floor lighting connector

Repair if necessary.

UCH black connector, green connection strip **track 31** → **Track 2** front passenger floor lighting connector

Passenger compartment fuse and relay box green connector, black connection strip **track 6** → **Track 1** front passenger floor lighting connector

If the fault is still present, check the intermediate connector **R107** (black) on tracks **1** and **2**.
Repair if necessary.

If the fault is still present, contact the Techline.

AFTER REPAIR	Carry out a fault finding procedure on the system. Clear the fault memory. Deal with any other faults.

GETtheMANUALS.org

DF081 PRESENT OR STORED	DOOR UNLOCKING BUTTON CIRCUIT

NOTES	**Special notes:** Lock the vehicle. Press the vehicle locking button: the **locking button** status must be active.

Check the insulation, continuity and the absence of interference resistance on the following connections:

Button **track B1** → **track 17** UCH black connector

Button **track A2** → **earth**

Repair if necessary.

Press the unlocking button and check for continuity between the two button tracks.
If there is no continuity, replace the button.

If the fault is still present, contact the Techline.

AFTER REPAIR	Carry out a fault finding procedure on the system. Clear the fault memory. Deal with any other faults.

GETtheMANUALS.org

DF086 PRESENT OR STORED	REAR WIPER RELAY CC.1 : Short circuit to + 12 V

NOTES	Switch on the ignition, activate the wipers to confirm the fault.

If the fault is still present contact Techline.

AFTER REPAIR	Carry out a fault finding procedure on the system. Clear the fault memory. Deal with any other faults.

GETtheMANUALS.org

DF087 PRESENT OR STORED	SIDE LIGHTS RELAY CONTROL CIRCUIT CC.1 : Short circuit to + 12 V

NOTES	**Special notes:** Switch on the ignition.

Check the supply to the relay on **tracks B1 and B3** of the fuse and relay box.
Check **the continuity and insulation** of the following connection: UCH **track 29** white connector ⟶ **track B2** fuse and relay box Repair if necessary.
Check the relay.
If the fault is still present, contact the Techline.

AFTER REPAIR	Carry out a fault finding procedure on the system. Clear the fault memory. Deal with any other faults.

GETtheMANUALS.org

DF088 PRESENT OR STORED	DIPPED BEAM HEADLIGHTS RELAY CONTROL CIRCUIT CC.1 : Short circuit to + 12 V

NOTES	**Special notes:** Switch on the ignition.

Check the supply to the relay on **tracks A1 and A3** of the fuse and relay box.
Check **the continuity and insulation** of the following connection: UCH **track 30** white connector ⟶ **track A2** fuse and relay box Repair if necessary.
Check the relay.
If the fault is still present, contact the Techline.

AFTER REPAIR	Carry out a fault finding procedure on the system. Clear the fault memory. Deal with any other faults.

GETtheMANUALS.org

DF089 PRESENT OR STORED	HEADLIGHT WASHER RELAY CONTROL CIRCUIT CC.1 : Short circuit to + 12 V

NOTES	**Special notes:** Switch on the ignition, activate the windscreen wipers at low speed.

Check the supply to the relay on **tracks D1 and D5** of the fuse and relay box.
Check **the insulation, continuity and the absence of interference resistance** on the following connections: UCH **track 40** white connector ⟶ **track D2** fuse and relay box
Check the relay.
If the fault is still present, contact the Techline.

AFTER REPAIR	Carry out a fault finding procedure on the system. Clear the fault memory. Deal with any other faults.

GETtheMANUALS.org

DF090 **DF091** **DF092** **DF093** **DF094** **DF095** **DF096** **PRESENT** **OR** **STORED**	LEFT-HAND BRAKE LIGHT CIRCUIT RIGHT-HAND BRAKE LIGHT CIRCUIT BRAKE LIGHT FUSES SIDE LIGHTS CIRCUIT NUMBER PLATE LIGHTING CIRCUIT RIGHT-HAND SIDE LIGHTS FUSE(S) LEFT-HAND SIDE LIGHTS FUSE(S) BRAKE LIGHTS FUSE(S)

NOTES	**Special notes:** These faults only exist on vehicles with voice synthesiser. Switch on the ignition and the lights and press the brake pedal to confirm these faults.

Check the fuses, the bulbs and the associated wiring.
Remember that the wiring diagram may vary according to the vehicle (with or without daytime running lights).

AFTER REPAIR	Carry out a fault finding procedure on the system. Clear the fault memory. Deal with any other faults.

UCH_V08_DF090/UCH_V10_DF090/UCH_V08_DF091/UCH_V10_DF091/
UCH_V08_DF092/UCH_V10_DF092/UCH_V08_DF093/UCH_V10_DF093/
UCH_V08_DF094/UCH_V10_DF094/UCH_V08_DF095/UCH_V10_DF095/
UCH_V08_DF096/UCH_V10_DF096 UCH73 ph1

GETtheMANUALS.org

DF098 PRESENT OR STORED	MAIN BEAM HEADLIGHT RELAY CONTROL CIRCUIT CC.1 : Short circuit to + 12 V

NOTES	**Special notes:** Switch on the main beam headlights and confirm the fault.

If the fault is still present, contact the Techline.

AFTER REPAIR	Carry out a fault finding procedure on the system. Clear the fault memory. Deal with any other faults.

GETtheMANUALS.org

DF099 PRESENT OR STORED	WINDSCREEN WIPER MOTOR CIRCUIT 1.DEF: Unidentified electrical fault CC.1 : Short circuit to + 12 V CO.0 : Open circuit or short circuit to earth

NOTES	**Special notes:** Switch on the ignition, activate the windscreen wiper.

Check that the windscreen wiper motor is being correctly supplied:
earth on **track 2**
+ battery feed on **track 1**
+ after ignition feed on **track 4**

Check **the insulation, continuity and the absence of interference resistance** on the following connections:

wiper motor **track 5** ⟶ **track 23** UCH black connector

wiper motor **track 5** ⟶ **track 3** rain sensor

Repair if necessary.

If the fault is still present, replace the **windscreen wiper motor**.

If the fault is still present, contact the Techline.

AFTER REPAIR	Carry out a fault finding procedure on the system. Clear the fault memory. Deal with any other faults.

GETtheMANUALS.org

DF100 PRESENT OR STORED	OPPOSING WIPERS 1.DEF: Wiper system jammed 2.DEF: Wiper system overloaded 3.DEF: Wiper computer fault

NOTES	**Special notes:** Switch on the ignition, activate the windscreen wiper.

1.DEF or 2.DEF

Replace the opposing wiper motor.

3.DEF

Check that the wiper motor is being correctly supplied.
Replace the opposing wiper motor.

AFTER REPAIR	Carry out a fault finding procedure on the system. Clear the fault memory. Deal with any other faults.

GETtheMANUALS.org

DF102 PRESENT OR STORED	STEERING MOTOR CONTROL CIRCUIT 1.DEF: Open circuit or short circuit

NOTES	**Special notes:** Switch on the ignition to confirm the fault.

Check that the **UCH** is not configured with power-assisted steering (See **Configurations and programming, LC063 Power-assisted steering type**), when the this feature is not available on the vehicle.

Check the insulation, continuity and the absence of interference resistance on the following connections:

UCH **track 18** white connector	→	**track A** variable power-assisted steering motor
UCH **track 3** white connector	→	**track B** variable power-assisted steering motor
UCH **track 13** white connector	→	**track C** variable power-assisted steering motor
UCH **track 2** white connector	→	**track D** variable power-assisted steering motor
earth	→	**track E** variable power-assisted steering motor

Repair if necessary.

If the fault is still present, replace the power-assisted steering motor.

If the fault is still present, contact the Techline.

AFTER REPAIR	Carry out a fault finding procedure on the system. Clear the fault memory. Deal with any other faults.

GETtheMANUALS.org

DF103 PRESENT OR STORED	VARIABLE POWER-ASSISTED STEERING MOTOR VOLTAGE 1.DEF: Voltage outside permitted range of values

NOTES	**Special notes:** With the engine running, move the steering wheel to engage the variable power steering motor.

Run fault finding on the charge circuit.
Carry out a multiplex network test.

The battery voltage at the terminals of the passenger compartment fuse and relay box should be between **9.5** and **16.5 V** for the variable power-assisted steering to operate correctly.

AFTER REPAIR	Carry out a fault finding procedure on the system. Clear the fault memory. Deal with any other faults.

GETtheMANUALS.org

DF106 PRESENT OR STORED	DOOR LOCKING BUTTON CIRCUIT

NOTES	**Special notes:** Switch on the ignition, unlock the vehicle. Check that the doors are fully closed. Check that there is no Airbag fault; run fault finding on the multiplex network. Press the vehicle locking button: status **ET044 Electric Central Door Locking button** must be **locked**.

Check the insulation, continuity and the absence of interference resistance on the following connections:

Button **track A3** → **track 9** UCH black connector

Button **track A2** → **earth**

Repair if necessary.

Press the locking button and check for continuity between the two button tracks.
If there is no continuity, replace the button.

If the fault is still present, contact Techline.

AFTER REPAIR	Carry out a fault finding procedure on the system. Clear the fault memory. Deal with any other faults.

GETtheMANUALS.org

Tool fault	Diagnostic tool title
DF089	Headlight washer relay control circuit
DF090	Left-hand brake light circuit
DF091	Right-hand brake light circuit
DF092	Side lights circuit
DF093	Number plate lighting circuit
DF094	Right-hand side light fuse(s)
DF095	Left-hand side light fuse(s)
DF096	Brake light fuse(s)
DF098	Main beam headlight relay control circuit
DF099	Windscreen wiper motor circuit
DF100	Opposing wipers
DF102	Steering motor control circuit
DF103	Variable power-assisted steering motor voltage
DF106	Door locking button circuit

GETtheMANUALS.org

NOTES	Only check conformity after a **full check** with the diagnostic tool. The values indicated in this conformity check are given as examples.

MAIN COMPUTER STATUSES AND PARAMETERS

Order	Function	Parameter or Status checked or Action		Display and notes	Fault finding
1	UCH	**ET008:**	blank UCH	**NO** **YES**	Refer to scenario **SC004 UCH Programming**
2	Battery voltage	**PR001:**	Battery voltage	**8 V < PR001 < 16 V**	
3	Power supply	**ET174:**	+ 12 V after ignition feed relay control	**INACTIVE** **ACTIVE**	In the event of a fault, consult fault **DF060 + 12 V APC relay control circuit**
4		**ET004:**	+ 12 V after ignition feed	**ABSENT** **PRESENT**	
5		**ET238:**	APC relay + 12 V break contact	**INACTIVE** **ACTIVE**	In the event of a fault, consult status **ET238 APC relay + 12 V break contact**
6	Vehicle speed	**PR008:**	Vehicle speed	**Indicates the vehicle speed.**	
7	Temperature	**PR002:**	External temperature	**Indicates the outside temperature.**	In the event of a fault, refer to the interpretation of parameter **PR002 External temperature**.
8	Driver's seat position memory button	**ET243:**	Driver's seat position memory button	**RELEASED** **PRESSED**	Check that the configuration **CF089 Driver's seat position memory** is **With**, read configuration **LC050 Driver's seat position memory**. In the event of a fault, consult the interpretation of fault **DF028 Driver's seat position memory connection**

GETtheMANUALS.org

NOTES	Only check conformity after a **full check** with the diagnostic tool. The values indicated in this conformity check are given as examples. Ensure that configuration **CF116 Hands-free locking** is WITH, read configuration **LC048 Hands-free locking**.

KEYLESS VEHICLE: ACCESS

Order	Function	Parameter or Status checked or Action		Display and notes	Fault finding
1	RAID	**ET043:**	Renault Anti-Intruder Device (RAID) via central locking function	**YES** **NO**	Check that configuration **CF108 Automatic locking when driving** is With, read configuration **LC040 Automatic locking when driving**.
2	Hands-free	**ET249:**	Hands-free mode	**INACTIVE** **ACTIVE**	Check configuration **CF116 Hands-free locking**, read configuration **LC048 Hands-free locking**.
3		**ET251:**	Hands-free function button on card	**LONG PRESS** **SHORT PRESS**	
4	Opening elements	**ET186:**	Short press on door closing button	**NO** **YES**	In the event of a fault, consult the interpretation of faults **DF081 Door unlocking button circuit** and **DF106 Door locking button circuit**.
5		**ET187:**	Long press on door closing button		
6		**ET189:**	Long press on door opening button	**NO** **SHORT PRESS**	
7	CPE (CENTRAL ELECTRIC DOOR LOCKING)	**ET044:**	Electric door-locking button	**LOCKING** **UNLOCKING**	

GETtheMANUALS.org

NOTES	Only check conformity after a **full check** with the diagnostic tool. The values indicated in this conformity check are given as examples. Ensure that configuration **CF116 Hands-free locking** is WITH, read configuration **LC048 Hands-free locking**.

KEYLESS VEHICLE: ACCESS (CONTINUED 1)

Order	Function	Parameter or Status checked or Action	Display and notes	Fault finding
8	Doors	**ET053:** Driver's door	**OPEN** **CLOSED**	In the event of a fault, consult the interpretation of status **ET053 Driver's door**.
9		**ET042:** Passenger door		In the event of a fault, consult the interpretation of status **ET042 Passenger door**.
10		**ET051:** Rear left-hand door		In the event of a fault, consult the interpretation of status **ET051 Rear left-hand door**.
11		**ET052:** Rear right-hand door		In the event of a fault, consult the interpretation of status **ET052 Rear right-hand door**.

GETtheMANUALS.org

NOTES	Only check conformity after a **full check** with the diagnostic tool. The values indicated in this conformity check are given as examples. Ensure that configuration **CF116 Hands-free locking** is WITH, read configuration **LC048 Hands-free locking**.

KEYLESS VEHICLE: ACCESS (CONTINUED 2)

Order	Function	Parameter or Status checked or Action		Display and notes	Fault finding
12	Optical sensors	**ET054:**	Optical sensors supplied	**YES** **NO**	In the event of a fault, consult the interpretation of statuses **ET055 Front optical sensor (driver's side), ET281 Front optical sensor (passenger side), ET241 Rear left-hand optical sensor** and **ET242 Rear right-hand optical sensor**.
13		**ET055:**	Front driver side optical sensor	**INACTIVE** **ACTIVE**	In the event of a fault, consult the interpretation of status **ET055 Front optical sensor (driver's side)**.
14		**ET281:**	Front passenger optical sensor	**INACTIVE** **ACTIVE**	In the event of a fault, consult the interpretation of status **ET281 Front optical sensor (passenger side)**.
15		**ET241:**	Rear left-hand optical sensor	**INACTIVE** **ACTIVE**	In the event of a fault, refer to the interpretation of status **ET241 Rear left-hand optical sensor**.
16		**ET242:**	Rear right-hand optical sensor	**INACTIVE** **ACTIVE**	In the event of a fault, refer to the interpretation of status **ET242 Rear right-hand optical sensor**.

GETtheMANUALS.org

NOTES	Only check conformity after a **full check** with the diagnostic tool. The values indicated in this conformity check are given as examples. Ensure that configuration **CF116 Hands-free locking** is WITH, read configuration **LC048 Hands-free locking**.

KEYLESS VEHICLE: ACCESS (CONTINUED 3)

Order	Function	Parameter or Status checked or Action	Display and notes	Fault finding
17	Child safety	**ET089:** Electric child safety lock button	**INACTIVE** **ACTIVE**	Ensure that configuration **CF033 Electric child safety lock** is WITH, read configuration **LC026 Electric child safety lock**. In the event of a fault, refer to the interpretation of fault **DF063 Child safety function**.
18		**ET159:** Rear left-hand door child safety lock	**INACTIVE** **ACTIVE**	Ensure that configuration **CF033 Electric child safety lock** is WITH, read configuration **LC026 Electric child safety lock**. In the event of a fault, consult the interpretation of status **ET159 Rear left-hand child safety door**.
19		**ET160:** Rear right-hand door child safety lock	**INACTIVE** **ACTIVE**	Ensure that configuration **CF033 Electric child safety lock** is WITH, read configuration **LC026 Electric child safety lock**. In the event of a fault, consult the interpretation of status **ET160 Rear left-hand child safety door**.

GETtheMANUALS.org

NOTES	Only check conformity after a **full check** with the diagnostic tool. The values indicated in this conformity check are given as examples. Ensure that configuration **CF116 Hands-free locking** is WITH, read configuration **LC048 Hands-free locking**.

KEYLESS VEHICLE: ACCESS (CONTINUED 4)

Order	Function	Parameter or Status checked or Action	Display and notes	Fault finding
20	Tailgate lock	**ET061:** Tailgate lock request	**YES** **NO**	In the event of a fault, consult the interpretation of status **ET061 Tailgate lock request**.
21	Striker plate	**ET252:** Striker plate control	**RAISING** **LOWERING**	In the event of a fault, refer to status **ET050 Tailgate/luggage compartment**.
22	Tailgate/ Luggage compartment	**ET050:** Tailgate/Luggage compartment	**OPEN** **CLOSED**	
23	Striker plate	**ET253:** Striker plate position signal	**ABSENT** **HIGH** **LOW**	

GETtheMANUALS.org

NOTES	Only check conformity after a **full check** with the diagnostic tool. The values indicated in this conformity check are given as examples. Ensure that configuration **CF116 Hands-free locking** is WITH, read configuration **LC048 Hands-free locking**.

KEYLESS VEHICLE: ACCESS (CONTINUED 5)

Order	Function	Parameter or Status checked or Action		Display and notes	Fault finding
24	Door locking/ unlocking	**AC002:**	Door locking/ unlocking	**Ignition on, engine off**	In the event of a fault, ensure that the configuration **CF116 Hands-free locking** is WITH, read configuration **LC048 Hands-free locking**.
25	Accumulator	**AC010:**	Recharge battery		
26		**AC011:**	End of battery recharge		

GETtheMANUALS.org

NOTES	Only check conformity after a **full check** with the diagnostic tool. The values indicated in this conformity check are given as examples.

KEYLESS VEHICLE: PROTECTION

Order	Function	Parameter or Status checked or Action		Display and notes	Fault finding
1	UCH	**ET008:**	blank UCH	**NO** **YES**	Refer to the **SC004 UCH Programming** operation.
2	Steering lock	**ET071:**	Unprogrammed steering lock	**NO** **YES**	Check the conformity of the steering column lock, if the fault is still present contact Techline.
3	Engine immobiliser	**ET046:**	Engine immobiliser	**INACTIVE** **ACTIVE**	In the event of a fault, perform a multiplex network test (see **88B**). Refer to the interpretation of status **ET046**.
4	Steering lock	**ET214:**	Incorrect lock code	**NO** **YES**	In the event of a fault, refer to the interpretation of status **ET214 Incorrect lock code**.
5		**ET073:**	Steering lock sensor signal	**LOCK BOLT ENGAGED, LOCK BOLT WITHDRAWN, LOCK BOLT SECURED IN WITHDRAWN POSITION**	In the event of a fault, refer to the interpretation of status **ET073 Steering column lock sensor signal**.
6		**ET119:**	UCH request to steering column lock	**COLUMN LOCKING CONTROL, COLUMN UNLOCKING CONTROL**	In the event of a fault, refer to the interpretation of status **ET119 UCH request to steering column lock**.
7		**ET213:**	Steering column anti-theft lock	**ACTIVE** **INACTIVE**	In the event of a fault, refer to the interpretation of status **ET213 Steering column anti-theft lock**.
8		**ET163:**	Resynchronise card	**YES** **NO**	
9	Card locking in the reader	**ET051:**	Card locking in the reader	**Ignition off, engine stopped.**	

GETtheMANUALS.org

NOTES	Only check conformity after a **full check** with the diagnostic tool. The values indicated in this conformity check are given as examples.

KEYLESS VEHICLE: PROTECTION (CONTINUED 1)

Order	Function	Parameter or Status checked or Action		Display and notes	Fault finding
10	Steering column locking inhibited	**ET173:**	Steering column locking inhibited	**STEERING COLUMN LOCKING INHIBITED, LOCK INHIBITED: AIRBAG DEPLOYED, LOCK INHIBITED: AIRBAG FAULT, LOCKING INHIBITED: SPEED > 0, LOCK INHIBITED: CARD PRESENT FAULT**	
11	Card	**ET176:**	Card	**ACTIVE INACTIVE**	In the event of a fault, refer to the interpretation of faults **DF055 Card present switch circuit, DF056 Card fully inserted switch circuit, DF057 UCH → card reader connection** and the interpretation of statuses **ET135 Card code valid, ET164 Card code received, ET172 Card fully inserted**.
12		**ET162:**	Card near vehicle	**YES NO**	

GETtheMANUALS.org

NOTES	Only check conformity after a **full check** with the diagnostic tool. The values indicated in this conformity check are given as examples.

KEYLESS VEHICLE: PROTECTION (CONTINUED 2)

Order	Function	Parameter or Status checked or Action		Display and notes	Fault finding
13	Card	**ET172:**	Card fully inserted	**YES** **NO**	In the event of a fault, refer to the interpretation of faults **DF055 Card present switch circuit, DF056 Card fully inserted switch circuit, DF057 UCH → card reader connection and the interpretation of statuses ET135 Card code valid, ET164 Card code received, ET172 Card fully inserted**.
14		**ET164:**	Card code received	**YES** **NO**	
15		**ET135:**	Card code valid	**CARD 1 IDENTIFIED** **CARD 2 IDENTIFIED** **CARD 3 IDENTIFIED** **CARD 4 IDENTIFIED** **NO**	
16		**ET161:**	Card transmission received	**ACTIVE** **INACTIVE**	
17		**ET321:**	Card transmission recognised	**YES** **NO**	

GETtheMANUALS.org

NOTES	Only check conformity after a **full check** with the diagnostic tool. The values indicated in this conformity check are given as examples.

KEYLESS VEHICLE: STARTING

Order	Function	Parameter or Status checked or Action		Display and notes	Fault finding
1	Engine immobiliser	**ET046:**	Engine immobiliser	**INACTIVE** **ACTIVE**	In the event of a fault, perform a multiplex network test (see **88B**). Refer to the interpretation of status **ET046**.
2	Start button	**ET070:**	Start button	**RELEASED** **PRESSED**	In the event of a fault, consult the interpretation of status **ET070 Start button**.
3	Starter relay	**ET175:**	Starter relay control	**ACTIVE** **INACTIVE**	In the event of a fault, consult the interpretation of status **ET175 Starter relay command**.
4	Clutch pedal	**ET048:**	Clutch pedal position	**DEPRESSED** **RELEASED**	In the event of a fault, refer to the interpretation of status **ET048 Clutch pedal position**.
5	Automatic transmission lever	**ET170:**	Automatic gearbox lever position signal	**P** **INTERMEDIATE**	In the event of a fault, consult the interpretation of status **ET170 Automatic gearbox lever position signal**.
6	Engine	**ET142:**	Engine operating phase	**STOPPED** **UNDER STARTER** **RUNNING** **STALLED**	In the event of a fault consult the interpretation of status **ET142 Engine operating phase**.

GETtheMANUALS.org

NOTES	Only check conformity after a **full check** with the diagnostic tool. The values indicated in this conformity check are given as examples.

KEYLESS VEHICLE: STARTING (CONTINUED 1)

Order	Function	Parameter or Status checked or Action	Display and notes	Fault finding
7	Relay	**AC045:** Starter relay control	**Gear lever in neutral position**	In the event of a fault, consult the interpretation of status **ET175 Starter relay command**.
8		**AC044:** + 12 V accessories feed relay	**With the ignition off**	In the event of a fault, refer to the test procedure for relay 22 **PRO1**.
9		**AC043:** + 12 V after ignition feed relay	**With the ignition off**	
10	Warning light	**AC047:** OK to start indicator light	**Ignition on, engine off Ignition on, engine off Run the command to test whether the indicator light on the engine start/stop button comes on**	In the event of a fault, consult the interpretation of command **AC047 Start prompt indicator light**.
11		**AC048:** Engine running indicator light	**Ignition on, engine off Run the command to test whether the indicator light on the engine start/stop button comes on**	

GETtheMANUALS.org

NOTES	Only check conformity after a **full check** with the diagnostic tool. The values indicated in this conformity check are given as examples.

WIPERS: WIPER CONTROL

Order	Function	Parameter or Status checked or Action		Display and notes	Fault finding
1	Wiper	**ET114:**	Wiping request via rain sensor	**NO** **LOW-SPEED** **HIGH-SPEED**	In the event of a fault, refer to the interpretation of **DF011 Rain/light sensor circuit**.
2		**ET077:**	Wiper stalk position	**INACTIVE** **AUTOMATIC** **LOW-SPEED** **HIGH-SPEED**	In the event of a fault, consult the interpretation of status **ET077 Wiper stalk position**.
3		**ET027:**	Windscreen wiper park position	**INACTIVE** **ACTIVE**	In the event of a fault, refer to the interpretation of fault **DF099 Windscreen wiper motor circuit**.
4	Windscreen washer	**ET078:**	Windscreen washer request	**INACTIVE** **ACTIVE**	In the event of a fault, consult the interpretation of status **ET078 Windscreen washer request**.
5	Wiper	**ET080:**	Rear screen wiper request	**INACTIVE** **ACTIVE**	In the event of a fault, refer to the interpretation of fault **DF040 Rear screen wiper park position**.
6	Wiper	**ET097:**	Rear screen wiper park position	**INACTIVE** **ACTIVE**	In the event of a fault, refer to the interpretation of fault **DF040 Rear screen wiper park position**.
7	Windscreen washer	**ET079:**	Rear screen washer request	**INACTIVE** **ACTIVE**	In the event of a fault, consult the interpretation of status **ET079 Rear screen washer request**.

GETtheMANUALS.org

NOTES	Only check conformity after a **full check** with the diagnostic tool. The values indicated in this conformity check are given as examples.

LIGHTING: LIGHTING CONTROL

Order	Function	Parameter or Status checked or Action		Display and notes	Fault finding
1	Automatic headlighting	**ET278:**	Automatic headlighting	**INACTIVE** **ACTIVE**	Ensure that the configuration **CF169 Automatic headlighting** is WITH, read configuration **LC068 Automatic headlighting**. In the event of a fault, refer to the interpretation of **DF011 Rain/ light sensor circuit**.
2		**ET115:**	Request to switch on lights by light sensor	**YES** **NO**	In the event of a fault, refer to the interpretation of **DF011 Rain/ light sensor circuit**.
3	Lighting stalk	**ET081:**	Lighting switch position	**OFF** **SIDE** **DIPPED**	In the event of a fault, consult the interpretation of faults: **DF092 Side lights circuit, DF088 Dipped beam relay control circuit and DF098 Main beam headlight control circuit**.
4	Hazard warning lights	**ET275:**	Hazard warning lights switch	**INACTIVE** **ACTIVE**	In the event of a fault, consult the interpretation of status **ET275 Hazard warning lights switch**.
5	Direction indicator request	**ET084:**	Right-hand indicator request	**INACTIVE** **ACTIVE**	In the event of a fault, refer to the interpretation of status **ET084 Right-hand indicator request**.
6		**ET083:**	Left-hand indicator request	**INACTIVE** **ACTIVE**	In the event of a fault, refer to the interpretation of status **ET083 Left-hand indicator request**.
7	Brake lights	**ET276:**	Brake lights control	**INACTIVE** **ACTIVE**	In the event of a fault, consult the interpretation of status **ET276 Brake light switch**.

GETtheMANUALS.org

NOTES	Only check conformity after a **full check** with the diagnostic tool. The values indicated in this conformity check are given as examples.

LIGHTING: LIGHTING CONTROL (CONTINUED)

Order	Function	Parameter or Status checked or Action	Display and notes	Fault finding
8	Side lights	**AC055:** Side lights	**With the ignition off**	In the event of a fault, refer to the interpretation of fault **DF092 Side light circuit**.
9	Dipped headlights	**AC054:** Dipped headlights	**With the ignition off**	In the event of a fault, refer to the interpretation of fault **DF088 Dipped headlights relay control circuit**.
10	Main beam headlights	**AC062:** Main beam headlights	**With the ignition off**	In the event of a fault, refer to the interpretation of fault **DF098 Main beam headlight relay control circuit**.
11	Audible warning	**AC013:** Audible warning	**With the ignition off**	In the event of a fault, refer to the interpretation of command **AC013 Audible warning**.

GETtheMANUALS.org

NOTES	Only check conformity after a **full check** with the diagnostic tool. The values indicated in this conformity check are given as examples.

POWER-ASSISTED STEERING: ASSISTANCE

Order	Function	Parameter or Status checked or Action		Display and notes	Fault finding
1	Power-assisted steering motor	**PR060:**	Position of the power steering motor	**Only take this parameter into account for vehicles fitted with ordinary steering (WITHOUT variable power-assistance)**	Ensure that configuration **CF134 Type of power steering** is **variable**. Read configuration **LC063 Type of power steering**. In the event of a fault, refer to the interpretation of parameter **PR060 Position of the power-assisted steering motor** and fault **DF103 Variable power-assisted steering motor voltage**.
2		**AC077:**	Power-assisted steering motor test	**Ignition on, engine off**	

GETtheMANUALS.org

Tool status	Diagnostic tool title
ET004	+ 12 V after ignition feed
ET008	Blank UCH
ET027	Windscreen wiper park position
ET042	Passenger door
ET043	RAID function authorisation by central locking button
ET044	Electric door-locking button
ET046	Engine immobiliser
ET048	Clutch pedal position
ET050	Tailgate/Luggage compartment
ET051	Rear left-hand door
ET052	Rear right-hand door
ET053	Driver's door
ET054	Optical sensors supplied
ET055	Front driver side optical sensor
ET061	Tailgate opening request
ET070	Start button
ET071	Unprogrammed steering lock
ET073	Steering lock sensor signal
ET077	Wiper stalk position
ET078	Windscreen washer request
ET079	Rear screen washer request
ET080	Rear screen wiper request
ET081	Lighting switch position
ET082	Rear fog lights request
ET083	Left-hand indicator request
ET084	Right-hand indicator request
ET089	Electric child safety lock button
ET097	Rear screen wiper park position
ET114	Wiper request by rain sensor
ET115	Request to switch on lights by light sensor
ET119	UCH request to steering column lock
ET135	Card code valid

GETtheMANUALS.org

Tool status	Diagnostic tool title
ET142	Engine operating phase
ET159	Rear left-hand door child safety lock
ET160	Rear right-hand door child safety lock
ET161	Card transmission received
ET162	Card near vehicle
ET163	Resynchronise card
ET164	Card code received
ET170	Automatic gearbox lever position signal
ET171	Manual gearbox lever position
ET172	Card fully inserted
ET173	Steering column locking inhibited
ET174	+ 12 V after ignition feed relay control
ET175	Starter relay control
ET176	Card
ET186	Short press on door closing button
ET187	Long press on door closing button
ET189	Long press on door opening button
ET213	Steering column anti-theft lock
ET214	Incorrect lock code
ET238	APC relay + 12 V break contact
ET241	Rear left-hand optical sensor
ET242	Rear right-hand optical sensor
ET243	Driver's seat position memory button
ET249	Hands-free mode
ET251	Hands-free function button on card
ET252	Striker plate control
ET253	Striker plate position signal
ET275	Hazard warning lights switch
ET276	Brake lights control
ET278	Automatic headlighting
ET281	Front passenger optical sensor
ET321	Card transmission recognised

GETtheMANUALS.org

ET027	WINDSCREEN WIPER PARK POSITION

NOTES	There must be no present or stored faults. Switch on the ignition. Switch the wiper switch to the slow speed position, check that the **park position** status is active when the windscreen wipers reach the idle position.

Check that the wiper arms reach the idle position properly.
Replace the wiper motor.

AFTER REPAIR	Carry out a fault finding procedure on the system. Clear the fault memory. Deal with any other faults.

GETtheMANUALS.org

ET042	PASSENGER DOOR

NOTES	Open the passenger door. Status **ET042 Passenger door** should be OPEN.

If status **ET042** is CLOSED:

Check the connection and condition of the passenger door central locking connector and repair if necessary.

Check the **continuity** between **tracks A** and **B** of the passenger door central locking connector in the door open position.
If the checks are not correct, replace the passenger door central door locking.

Check the condition and connection of the **UCH** white connector.
Repair if necessary.

Check the **continuity and insulation** of the following connections:

UCH white connector, brown connection strip **track 20**	→	**Track B** of the passenger door central door locking connector
Rear left-hand door electric central locking connector **track A**	→	**Passenger earth**

Check the **intermediate connector R154** on **track B10**.
Repair if necessary.

If the fault is still present, contact the Techline.

AFTER REPAIR	Carry out a fault finding procedure on the system. Clear the fault memory. Deal with any other faults.

GETtheMANUALS.org

ET046	ENGINE IMMOBILISER

NOTES	There must be no present or stored faults. Insert the card fully into the reader.

After a short while, the immobiliser warning light should go out and the **vehicle unprotected** status should be active.
If this does not happen, check that the **card code valid** status is active (if not, refer to the procedure for dealing with the corresponding status).
Carry out a fault finding procedure on the multiplex network.
Check that the **injection system is not unprogrammed** and that the **column lock** is not unprogrammed (if not, refer to the procedures for dealing with these statuses).

If **the engine immobiliser** is active, refer to the **injection system fault finding procedure** (petrol or diesel) and check that there are no faults. If there is no fault, refer to ALP7 in this section.
If **the steering column anti-theft lock** is active, check if status **Incorrect lock code** is active

Status inactive

Carry out another fault finding check on the multiplex network.
Restart the check.

Status active

Replace the steering column lock (refer to the corresponding Technical Note).
If the fault has not been solved, contact Techline.

AFTER REPAIR	Carry out a fault finding procedure on the system. Clear the fault memory. Deal with any other faults.

GETtheMANUALS.org

ET048	CLUTCH PEDAL POSITION

NOTES	**On manual gearboxes only.** There must be no present or stored faults. Switch on the ignition. Depress the clutch pedal: the switch status must be active.

Check **the insulation, continuity and the absence of interference resistance** on the following connections:

Switch **track A1** ⟶ **track 26** UCH black connector

(check the connection between the passenger compartment wiring loom and the engine wiring).

Check the earth **track B3** of the switch.

Remove the switch and press the circuit breaker.
IMPORTANT
There may be two clutch switches (one for the injection and one for the UCH).
The status of the clutch switch passes to active.
Replace the switch if it is faulty.

Check that the switch is properly mounted on the clutch pedal.

AFTER REPAIR	Carry out a fault finding procedure on the system. Clear the fault memory. Deal with any other faults.

GETtheMANUALS.org

ET050	TAILGATE/BOOT

NOTES	**Special notes:** None.

Check the connection and condition of the white UCH connector and the **Tailgate striker plate**.
Check there is **+ 12 V** between **track 2** of the **Tailgate striker plate** connector and the **rear left-hand earth**.
Check for **earth** between **track 1** of the **Tailgate striker plate** connector and the **rear left-hand earth**.
Check **the insulation, continuity and the absence of interference resistance** on the following connections: **UCH** white connector, green connection strip **track 34** → **Track 4 tailgate lock** connector **UCH** white connector, green connection strip **track 25** → **Track 1 tailgate lock** connector Repair if necessary.
If the fault is still present, replace the **Tailgate striker plate**, if the fault is still present contact the Techline.

AFTER REPAIR	Carry out a fault finding procedure on the system. Clear the fault memory. Deal with any other faults.

GETtheMANUALS.org

ET051	REAR LEFT-HAND DOOR

NOTES	Open the rear left-hand door. Status **ET051 Rear left-hand door** should be OPEN.

If status **ET051** is CLOSED:
Check the connection and condition of the rear left-hand door central door locking connector and repair if necessary.
Check the **continuity** between **tracks C** and **D** of the rear left-hand door central locking connector in the door open position. If not OK, replace the rear left-hand door central door locking.
Check the condition and connection of the **UCH** white connector. Repair if necessary.
Check the **continuity and insulation** of the following connections: **UCH** white connector, brown connection strip **track 15** → **Track C** of the rear left-hand door central locking connector Rear left-hand door electric central locking connector **track D** → **Rear left-hand earth**
If the fault is still present, check the **R155 intermediate connector** on **tracks A9** and **B9**. Repair if necessary.
If the fault is still present, contact the Techline.

AFTER REPAIR	Carry out a fault finding procedure on the system. Clear the fault memory. Deal with any other faults.

GETtheMANUALS.org

ET052	REAR RIGHT-HAND DOOR

NOTES	Open the rear right-hand door. Status **ET052 Rear right-hand door** should be OPEN.

If status **ET052** is CLOSED:
Check the connection and condition of the rear right-hand door central door locking connector and repair if necessary.
Check the **continuity** between **tracks D** and **C** of the rear right-hand door central locking connector in the door open position. If not OK, replace the rear right-hand door central door locking.
Check the condition and connection of the **UCH** white connector. Repair if necessary.
Check the **continuity and insulation** of the following connections: **UCH** white connector, brown connection strip **track 7** → **Track D** of the rear right-hand door central locking connector Rear left-hand door central locking connector **track C** → **Rear right-hand earth**
If the fault is still present, check the **intermediate connector R156** on **tracks A8** and **B8**. Repair if necessary.
If the fault is still present, contact the Techline.

AFTER REPAIR	Carry out a fault finding procedure on the system. Clear the fault memory. Deal with any other faults.

GETtheMANUALS.org

ET053	DRIVER'S DOOR

NOTES	Open the driver's door. Status **ET053 Driver's door** should be OPEN.

If status **ET053** is CLOSED:
Check the connection and condition of the driver's door central locking connector and repair if necessary.
Check the **continuity** between **tracks C** and **D** of the driver's door central locking connector in the door open position. If the checks are not OK, replace the driver's door central locking.
Check the condition and connection of the **UCH** white connector. Repair if necessary.
Check the **continuity and insulation** of the following connections: **UCH** white connector, brown connection strip **track 16** → **Track C** of the driver's door central door locking connector
If the fault is still present, check the **intermediate connector R153** on **track B10**. Repair if necessary.
If the fault is still present, contact the Techline.

AFTER REPAIR	Carry out a fault finding procedure on the system. Clear the fault memory. Deal with any other faults.

GETtheMANUALS.org

ET055	DRIVER'S SIDE FRONT OPTICAL SENSOR

NOTES	**Special notes:** None.

Check the connection and condition of the **UCH** black connector and the front left-hand door optical sensor connector.
Check **the insulation and continuity** of the connection: UCH black connector, green connection strip **track 28** → **Track 1** driver's door optical sensor connector UCH white connector, brown connection strip **track 5** → **Track 3** of the optical sensor connector Repair if necessary.
Ensure there is a power feed to the optical sensor between tracks 3 and 2.
If the fault is still present, replace the optical sensor of the front left-hand door.
If the fault is still present, contact the Techline.

AFTER REPAIR	Carry out a fault finding procedure on the system. Clear the fault memory. Deal with any other faults.

GETtheMANUALS.org

ET061	TAILGATE LOCK REQUEST

NOTES	**Special notes:** Press the tailgate opening switch.

Check the connection and condition of the UCH white connector and the **tailgate lock**.
Check for **+ 12 V (tailgate opening authorisation power feed)** between **track 2** of the **tailgate lock** connector and the **rear left-hand earth**.
Check for **earth** between **track 1** of the **tailgate lock** connector and the **rear left-hand earth**.
Measure the resistance of the **tailgate lock motor** between **tracks 1 and 2**.
Check the connections for insulation, continuity and the absence of interference resistance: **UCH** white connector, brown connection strip **track 8** ⟶ **Track 2** of the **tailgate lock** connector Repair if necessary.
If the fault is still present, replace the **tailgate lock**.

Check the connection and condition of the UCH white connector and the **tailgate opening switch**.
Check the **continuity** between **tracks 1** and **2** of the **tailgate opening switch**.
Check the insulation, continuity and the absence of interference resistance on the following connection: **Tailgate lock track 1** ⟶ **Track 1** of the **tailgate opening switch** connector Repair if necessary.
Check for **earth** between **track 2** of the **tailgate opening switch** connector and the **rear left-hand earth**.
If the fault is still present, replace the **rear opening switch**.
If the fault is still present, contact the Techline.

AFTER REPAIR	Carry out a fault finding procedure on the system. Clear the fault memory. Deal with any other faults.

GETtheMANUALS.org

ET070	START BUTTON

NOTES	There must be no present or stored faults. Switch on the ignition. Press the start button: the button status must be active.

Check **the insulation, continuity and the absence of interference resistance** on the following connections:

button **track 1** → **track 20** UCH black connector

Check the feed to the button (+ battery feed on **track 2**).

Replace the button if the fault is still present.

AFTER REPAIR	Carry out a fault finding procedure on the system. Clear the fault memory. Deal with any other faults.

GETtheMANUALS.org

ET073	STEERING COLUMN LOCK SENSOR SIGNAL

NOTES	There must be no present or stored faults.

Carry out a fault finding procedure on the multiplex network.
These statuses indicate the current position of the steering column lock.
Lock lever armed:
When the card is removed from the reader, the UCH sends a command to lock the steering column (see corresponding status).
Providing that the steering column lock is not disabled (see corresponding statuses) and providing there are no faults, **the bolt is engaged**.
Lock lever retracted:
When the card is fully inserted into the reader and has been authenticated, the UCH sends a command to unlock the steering column (unless it is already unlocked). **The bolt is withdrawn.**
IMPORTANT
The commands are protected by a secret code. Check every time that the steering column lock is not protected.
Lock bolt locked in withdrawn position:
When the bolt is withdrawn, the UCH locks the bolt via a specific connection.
For this, it uses the break contact of the + after ignition feed relay (to prevent the bolt from being released when driving).

AFTER REPAIR	Carry out a fault finding procedure on the system. Clear the fault memory. Deal with any other faults.

GETtheMANUALS.org

ET077	WIPER STALK POSITION

NOTES	There must be no present or stored faults. Switch on the ignition. Switch the wiper stalk to the intermittent position: the status must be active.

Check the + after ignition feed to the stalk: **tracks A7 and B4**.

Check **the insulation, continuity and the absence of interference resistance** on the following connections:

UCH **track 10** black connector ⟶ **track A1** wiper stalk

Check that the stalk is working correctly.

AFTER REPAIR	Carry out a fault finding procedure on the system. Clear the fault memory. Deal with any other faults.

GETtheMANUALS.org

ET078	WINDSCREEN WASHER REQUEST

NOTES	There must be no present or stored faults. Switch on the ignition. Pull the wiper stalk and check that the **windscreen washer control** status is active.

Check **the insulation, continuity and the absence of interference resistance** on the following connections:

UCH **track 35** black connector → **track A4** wiper stalk

Earth → **track B5** wiper stalk

+ After ignition feed → **tracks B4 and A7** wiper stalk

Check that the stalk is working correctly.

Check **the insulation, continuity and the absence of interference resistance** on the following connections:

pump **track 2** → **track A4** wiper stalk

pump **track 1** → wiper stalk **track B1**

AFTER REPAIR	Carry out a fault finding procedure on the system. Clear the fault memory. Deal with any other faults.

GETtheMANUALS.org

ET079	REAR SCREEN WASHER REQUEST

NOTES	There must be no present or stored faults. Switch on the ignition. Operate the rear screen washer and check that the **rear screen washer control** status is active.

Check **the insulation, continuity and the absence of interference resistance** on the following connections:

UCH **track 25** black connector → **track B1** wiper stalk

Earth → **track B5** wiper stalk

+ After ignition feed → **tracks B4 and A7** wiper stalk

Check that the stalk is working correctly.

Check **the insulation, continuity and the absence of interference resistance** on the following connections:

pump **track 2** → **track A4** wiper stalk

pump **track 1** → wiper stalk **track B1**

AFTER REPAIR	Carry out a fault finding procedure on the system. Clear the fault memory. Deal with any other faults.

GETtheMANUALS.org

ET083	LEFT-HAND INDICATOR REQUEST

NOTES	There must be no present or stored faults. Switch on the ignition. Switch on the left-hand indicator. The status must be active.

Check **the insulation, continuity and the absence of interference resistance** on the following connections:

UCH **track 37** black connector ⟶ **track A7** lighting stalk

AFTER REPAIR	Carry out a fault finding procedure on the system. Clear the fault memory. Deal with any other faults.

GETtheMANUALS.org

ET084	RIGHT-HAND INDICATOR REQUEST

NOTES	There must be no present or stored faults. Switch on the ignition. Switch on the right-hand indicator. The status must be active.

Check **the insulation, continuity and the absence of interference resistance** on the following connections:

UCH **track 36** black connector ⟶ **track A5** lighting stalk

AFTER REPAIR	Carry out a fault finding procedure on the system. Clear the fault memory. Deal with any other faults.

GETtheMANUALS.org

ET119	UCH REQUEST TO STEERING COLUMN LOCK

NOTES	**Special notes:** None.

Carry out a multiplex network test.
Check that the steering column lock is correct for the vehicle.
Check the connection and condition of the **UCH** white connector and the steering column lock connector.
Check the **continuity and insulation** of the following connections: **UCH** white connector, brown connection strip **track 9** → **Track 4 steering column lock** connector Repair if necessary.
If the fault is still present, contact the Techline.

AFTER REPAIR	Carry out a fault finding procedure on the system. Clear the fault memory. Deal with any other faults.

GETtheMANUALS.org

ET135	CARD CODE VALID

NOTES	There must be no present or stored faults. Insert the card fully into the reader. Do not remove the card. Check that the card fully inserted status is active.

The statuses listed above represent the various possible statuses of the card inserted in the reader:
– **normal:** the **card code valid status is active**: the card has been authenticated by the vehicle
– **if the card code valid status is inactive:**

If the **faulty card** status is **active**

Run the command for testing the connections between the card reader and the UCH.
Try with another card.
If the other card does not work either: replace the card reader.
Otherwise, replace the card.

Otherwise

Run the **check card** command.
If the card is unprogrammed, run the card programming command to allocate the card to the vehicle.
If the card is not unprogrammed, it may belong to a vehicle or may have been programmed for the vehicle, but is not currently allocated to it (in which case run the card programming command to allocate the card to the vehicle).

AFTER REPAIR	Carry out a fault finding procedure on the system. Clear the fault memory. Deal with any other faults.

GETtheMANUALS.org

ET142	ENGINE OPERATING PHASE

NOTES	There must be no present or stored faults. Switch on the ignition, start, drive, stop the engine. The engine can have the following operating statuses: Engine stopped, under starter, running, stalled. The statuses listed below develop as a function of the engine status. Important: the information supplied when the ignition is switched off is no longer meaningful.

If there is a fault, carry out fault finding on the multiplex network and injection system.

AFTER REPAIR	Carry out a fault finding procedure on the system. Clear the fault memory. Deal with any other faults.

GETtheMANUALS.org

ET159	REAR LEFT-HAND DOOR CHILD SAFETY LOCK

NOTES	**Special notes:** Switch on the ignition and press the child safety lock button.

Check the condition and position of the central door locking fuse.
Check the connection and condition of the white **UCH** connector and the rear door central locking motor connector.
Check insulation from **12 V** and from **earth** on the following connections: **UCH** white connector, **green connection strip track 21** → **Track F** of the rear left-hand door central locking motor Repair if necessary.
Check that the rear door central locking motors are working properly. Replace them, if necessary.
If the fault is still present, contact the Techline.

AFTER REPAIR	Carry out a fault finding procedure on the system. Clear the fault memory. Deal with any other faults.

GETtheMANUALS.org

ET160	REAR RIGHT-HAND DOOR CHILD SAFETY LOCK

NOTES	**Special notes:** Switch on the ignition and press the child safety lock button.

Check the condition and position of the central door locking fuse.
Check the connection and condition of the white **UCH** connector and the rear door central locking motor connector.
Check insulation from **12 V** and from **earth** on the following connections: **UCH** white connector, **brown connection strip track 4** → **Track A** of the rear right-hand door central locking motor
Repair if necessary.
Check that the rear door central locking motors are working properly. Replace them, if necessary.
If the fault is still present, contact the Techline.

AFTER REPAIR	Carry out a fault finding procedure on the system. Clear the fault memory. Deal with any other faults.

GETtheMANUALS.org

ET164	CARD CODE VALID

NOTES	There must be no present or stored faults. Insert the card halfway into the reader.

Connect the bornier of the UCH.

Check **the insulation, continuity and the absence of interference resistance** on the following connections:

UCH **track 12** white connector ⟶ **track 5** card reader

Check the feeds to the card reader (+ Battery feed on **track 2**, earth on **track 8**).
Measure the voltage on **track 12** of the UCH.

Voltage = **12 V**

Replace the UCH.

Otherwise

Try with another card.
Replace the card reader.

AFTER REPAIR	Carry out a fault finding procedure on the system. Clear the fault memory. Deal with any other faults.

GETtheMANUALS.org

ET170	AUTOMATIC GEARBOX LEVER POSITION SIGNAL

NOTES	There must be no present or stored faults. Switch on the ignition. Shift the gear selector lever to Park or Neutral. One of the two statuses must be active.

In the event of a fault, carry out a fault finding procedure on the multiplex network and the automatic transmission

AFTER REPAIR	Carry out a fault finding procedure on the system. Clear the fault memory. Deal with any other faults.

GETtheMANUALS.org

ET172	CARD FULLY INSERTED

NOTES	There must be no present or stored faults. Insert the card halfway into the reader.

Connect the bornier of the UCH.

Check **the insulation, continuity and the absence of interference resistance** on the following connections:

UCH **track 1** white connector ⟶ **track 7** card reader

Check the feeds to the card reader (+ Battery feed on **track 2**, earth on **track 8**).
Check the voltage on the UCH track.

Voltage = **12 V**

Replace the UCH.

Otherwise

Replace the card reader.

AFTER REPAIR	Carry out a fault finding procedure on the system. Clear the fault memory. Deal with any other faults.

GETtheMANUALS.org

ET213 **ET214**	STEERING COLUMN ANTI-THEFT LOCK INCORRECT LOCK CODE

NOTES	There must be no present or stored faults. Insert the card fully into the reader.

After a short while, the immobiliser warning light should go out and the **vehicle unprotected** status should be active.
If this does not happen, check that the **card code valid** status is active (if not, refer to the procedure for dealing with the corresponding status).
Carry out a fault finding procedure on the multiplex network.
Check that the **injection system is not unprogrammed** and that the **column lock** is not unprogrammed (if not, refer to the procedures for dealing with these statuses).

If **the engine immobiliser** is active, refer to the **injection system fault finding procedure** (petrol or diesel) and check that there are no faults. If there is no fault, refer to ALP no. 7 in this section.
If **the steering column anti-theft lock** is active, check if status **Incorrect lock code** is active.

Status inactive

Carry out another fault finding check on the multiplex network.
Restart the check.

Status active

Replace the steering column lock (refer to the corresponding Technical Note).
If the fault has not been solved, contact Techline.

AFTER REPAIR	Carry out a fault finding procedure on the system. Clear the fault memory. Deal with any other faults.

GETtheMANUALS.org

ET238	AFTER IGNITION FEED RELAY + 12 V BREAK CONTACT

NOTES	There must be no present or stored faults. Ignition off.

Disconnect the UCH from the passenger compartment relay and fuse box.
Check the battery voltage value at the terminals of the passenger compartment fuse and relay box. It should be around **12 V**.
Check the fuses in the passenger compartment fuse and relay box.
Refer to the relay checking procedure (**PRO1**) for the passenger compartment fuse and relay box and check the + after ignition feed relay (relay 22).
IMPORTANT
This supply is used by the UCH to lock the lever of the electric steering column lock.

AFTER REPAIR	Carry out a fault finding procedure on the system. Clear the fault memory. Deal with any other faults.

GETtheMANUALS.org

ET241	REAR LEFT-HAND OPTICAL SENSOR

NOTES	**Special notes:** None.

Check the connection and condition of the **UCH** black connector and the rear left-hand door optical sensor connector.
Check **the insulation and continuity** of the connection: UCH white connector, green connection strip **track 23** → **Track 1** rear left-hand door optical sensor connector UCH white connector, brown connection strip **track 5** → **Track 3** of the optical sensor connector
Repair if necessary.
Ensure there is a power feed to the optical sensor between tracks 3 and 2.
If the fault is still present, replace the optical sensor of the rear left-hand door.
If the fault is still present, contact the Techline.

AFTER REPAIR	Carry out a fault finding procedure on the system. Clear the fault memory. Deal with any other faults.

GETtheMANUALS.org

ET242	REAR RIGHT-HAND OPTICAL SENSOR

NOTES	**Special notes:** None.

Check the connection and condition of the **UCH** black connector and the rear right-hand door optical sensor connector.
Check **the insulation and continuity** of the connection: UCH black connector, green connection strip **track 29** → **Track 1** rear right-hand door optical sensor connector UCH white connector, brown connection strip **track 5** → **Track 3** of the optical sensor connector
Repair if necessary.
Ensure there is a power feed to the optical sensor between tracks 3 and 2.
If the fault is still present, replace the optical sensor of the rear right-hand door.
If the fault is still present, contact the Techline.

AFTER REPAIR	Carry out a fault finding procedure on the system. Clear the fault memory. Deal with any other faults.

GETtheMANUALS.org

ET252	STRIKER PLATE CONTROL

NOTES	**Special notes:** None.

Check the connection and condition of the white UCH connector and the **Tailgate striker plate**.
Check there is **+ 12 V** between **track 2** of the **Tailgate striker plate** connector and the **rear left-hand earth**.
Check for **earth** between **track 1** of the **Tailgate striker plate** connector and the **rear left-hand earth**.
Check **the insulation, continuity and the absence of interference resistance** on the following connections: **UCH** white connector, green connection strip **track 34** → **Track 4 tailgate lock** connector **UCH** white connector, green connection strip **track 25** → **Track 1 tailgate lock** connector Repair if necessary.
If the fault is still present, replace the **Tailgate striker plate**, if the fault is still present contact the Techline.

AFTER REPAIR	Carry out a fault finding procedure on the system. Clear the fault memory. Deal with any other faults.

GETtheMANUALS.org

ET275	HAZARD WARNING LIGHTS CONTROL

NOTES	There must be no present or stored faults. Operate the hazard warning lights. The status must be active.

Check **the insulation, continuity and the absence of interference resistance** on the following connections:

UCH **track 2** black connector → **track 3** hazard warning lights control

earth → **track 2** hazard warning lights control

Check that the hazard warning lights switch is working correctly.

AFTER REPAIR	Carry out a fault finding procedure on the system. Clear the fault memory. Deal with any other faults.

GETtheMANUALS.org

ET276	BRAKE LIGHTS CONTROL

NOTES	There must be no present or stored faults. This status should only be taken into account for cars with voice synthesiser. Switch on the ignition and press the brake pedal. The **stop light switch** status should be active.

Check the power feeds to the switch (+ after ignition feed on **tracks A1 and B1**).

Check **the insulation, continuity and the absence of interference resistance** on the following connections:

brake lights switch **track A3** → **track B7** passenger compartment fuse and relay box white connector

Important: there is a serial relay between the switch and the passenger compartment fuse box and relay.
This relay is controlled by the ABS system which can cut off the supply to the brake lights during certain regulation situations.
When the engine is not running, if the relay is open, refer to the ABS system fault finding procedure.
Check the passenger compartment fuse and relay box connectors.

Disconnect the UCH from the passenger compartment relay and fuse box.

Check **the insulation, continuity and the absence of interference resistance** on the following connections:

white connector **track B7** → **track 22** of the U1 connector (at the passenger compartment fuse and relay box terminals)

AFTER REPAIR	Carry out a fault finding procedure on the system. Clear the fault memory. Deal with any other faults.

GETtheMANUALS.org

Tool parameter	Diagnostic tool title
PR001	Battery voltage
PR002	External temperature
PR008	Vehicle speed
PR060	Power-assisted steering motor position

GETtheMANUALS.org

ET281	OPTICAL SENSOR (FRONT PASSENGER SIDE)

NOTES	**Special notes:** None.

Check the connection and condition of the **UCH** black connector and the front right-hand door optical sensor connector.
Check **the insulation and continuity** of the connection: UCH black connector, green connection strip **track 33** → **Track 1** front right-hand optical sensor connector UCH white connector, brown connection strip **track 5** → **Track 3** of the optical sensor connector Repair if necessary.
Ensure there is a power feed to the optical sensor between tracks 3 and 2.
If the fault is still present, replace the optical sensor of the front right-hand door.
If the fault is still present, contact the Techline.

AFTER REPAIR	Carry out a fault finding procedure on the system. Clear the fault memory. Deal with any other faults.

GETtheMANUALS.org

Tool command	Diagnostic tool title
RZ001	Fault memory
VP004	Enter VIN
AC002	Locking/unlocking opening elements
AC005	Unlocking doors and luggage compartment
AC010	Recharge battery
AC011	Battery recharge finished
AC013	Audible warning
AC043	+ 12 V after ignition feed relay
AC044	+ 12 V accessories feed relay
AC045	Starter relay
AC046	Securing lock bolt
AC047	OK to start indicator light
AC048	Engine running indicator light
AC051	Card locking in the card reader
AC054	Dipped headlights
AC055	Side lights
AC062	Main beam headlights
AC077	Power-assisted steering motor test
SC011	Check cards
SC019	Test the charge of the rechargeable battery in the card
SC020	Card battery charge test
SC023	UCH → card reader connections test
SC024	Securing lock bolt
SC025	Unlocking doors and luggage compartment

GETtheMANUALS.org

PR002	EXTERNAL TEMPERATURE

NOTES	None

Check the condition and connection of the **multifunction display** connector, repair if necessary.
Check the condition and connection of the black **UCH** connector. Repair if necessary.
Check **the continuity and insulation** of the following connection: **UCH P100** black 40-track connector, brown connection strip **track 14** ⟶ **Track 24 multifunction display** connector
If the fault is still present, contact the Techline.

AFTER REPAIR	Carry out a fault finding procedure on the system. Clear the fault memory. Deal with any other faults.

GETtheMANUALS.org

VP004	VIN ENTRY

NOTES	Perform this configuration after replacing the computer.

Establish dialogue with the **UCH**. Select the **Command mode** menu. Select the **Parameters** menu. Select line **VP** Write VIN. Confirm the steps described in the scenario. End of procedure.
The VIN is reread in the identification screen: ID019.

AFTER REPAIR	Carry out a fault finding procedure on the system. Clear the fault memory. Deal with any other faults.

GETtheMANUALS.org

AC013	WARNING BUZZER

NOTES	Switch off the ignition.

Check the insulation and continuity on the following connection:

Audible warning **track 3** ⟶ **Track 22** white **UCH** connector

Check the audible warning's power supply (**track 1**) and earth connection (**track 2**).
Repair if necessary.

Replace the audible warning.

If the fault is still present, contact the Techline.

AFTER REPAIR	Carry out a fault finding procedure on the system. Clear the fault memory. Deal with any other faults.

GETtheMANUALS.org

AC047	OK TO START INDICATOR LIGHT

NOTES	There must be no present or stored faults. Switch on the ignition. Press the start button: the button status must be active.

Check the feed to the button (+ battery feed on **track 2**).

If the indicator light does not light up, check the insulation and continuity of the following connection:

Start/stop button **track 1** ⟶ **track 20** UCH black connector

Repair if necessary.

Replace the engine Start/Stop button.

If the fault is still present, contact the Techline.

AFTER REPAIR	Carry out a fault finding procedure on the system. Clear the fault memory. Deal with any other faults.

GETtheMANUALS.org

SC011	CARD CHECK

NOTES	**Special note:** Apply this procedure if difficulties occur when reading the card and opening the doors.

Procedure:
Insert the card in the reader.
Establish dialogue with the **UCH**.
Select the **Command mode** menu.
Select the **Specific command** menu.
Select line **SC011 Check cards**.
Confirm the steps described in the scenario.
End of procedure.

AFTER REPAIR	Carry out a fault finding procedure on the system. Clear the fault memory. Deal with any other faults.

GETtheMANUALS.org

NOTES	Carry out a fault finding procedure on the multiplex network and engine immobiliser.

The car does not start/ignition cannot be switched on

- The instrument panel lights up and goes out alternately; the relays can be heard clicking — **ALP1**
- The + accessories feed is not switched (the display, radio and cigarette lighter do not work) when the card is inserted at least halfway into the card reader — **ALP2**
- The ignition is not switched on when the card is fully inserted into the card reader (Instrument panel and symbol are not on, fault finding cannot be run on the computers)
  - The immobiliser warning light flashes slowly on the instrument panel — **ALP3**
  - The immobiliser warning light flashes quickly on the instrument panel — **ALP4**
  - The immobiliser warning light is continuously lit on the instrument panel — **ALP5**
  - The immobiliser warning light is not lit on the instrument panel — **ALP6**
- The ignition is on (instrument panel on) but the immobiliser warning light is continuously lit on the instrument panel — **ALP7**
- Nothing happens when the engine start/stop button is pressed (The display and radio stay on) — **ALP8**
- When the start button is pressed, the display goes out, the radio switches off, but the starter does not run — **ALP9**
- When the start button is pressed, the display goes out, the radio switches off and the starter runs briefly but cuts out before the engine starts — **ALP10**

The card is not locked in the reader when the engine is running — **ALP11**

GETtheMANUALS.org

NOTES	Carry out a fault finding procedure on the multiplex network and engine immobiliser.

The vehicle does not stop when the button is pressed briefly

- But stops when the button is pressed repeatedly and in quick succession **ALP12**
- Even when the button is pressed repeatedly and in quick succession **ALP13**

Checking a fuse and relay box relay **PRO1**

GETtheMANUALS.org

NOTES	Carry out a fault finding procedure on the passenger compartment connection unit.

NO DIRECTION INDICATORS WORKING — **ALP14**

GETtheMANUALS.org

NOTES	Carry out fault finding on the **opening elements management**. Check that both door and tailgate opening and closing operations are detected. Check that card button operations are correctly detected. (Otherwise, refer to the section about dealing with statuses). Always refer to the status of the tailgate and the rear screen. These are representative of the status of the vehicle.

If there are several faults, deal with them in the order shown below

Locking or unlocking does not work on any door, including the tailgate	**ALP15**
Locking or unlocking does not work on any door, but works on the tailgate	**ALP16**
Locking or unlocking does not work on the tailgate or the rear screen, but does work on the doors	**ALP17**
Locking or unlocking does not work on the passenger door or fuel filler flap, but works on the other doors	**ALP18**
Locking or unlocking does not work on the driver's door or rear doors, but works on the passenger door and the fuel filler flap	**ALP19**
Locking or unlocking does not work on one door	**ALP20**
The vehicle cannot be opened from inside	**ALP21**
The interior handle locking does not work	**ALP22**
The rear interior handles cannot be locked from the driver's door	**ALP23**
Unlocking the vehicle using the door handle is not possible or difficult	**ALP24**
Locking does not work when you move away from the vehicle	**ALP25**
When you move away from the vehicle and it locks, there is no audible confirmation signal	**ALP26**
Automatic locking when driving does not work	**ALP27**
Checking the locking/unlocking double relay	**PRO2**

GETtheMANUALS.org

NOTES	Carry out fault finding on the **opening elements management**. Check that the door opening has been detected and that there is no ***fault in the connection for electric window operation***. Switch on the ignition.

In the customer complaints section, a distinction is made between:
– basic electric windows,
– anti-pinch electric windows,
– anti-pinch sunroof.
If there are several faults, deal with them in the order shown below

Anti-pinch electric windows

Operating principle of the switches	**TEST 1**
The electric window does not work at all	**ALP28**
The electric window opens and closes jerkily	**ALP29**
The electric window does not work in one-touch mode	**ALP30**
The electric window only works from the driver's door	**ALP31**
The child lock does not work	**ALP32**
The electric window can only be operated from the door that it is fitted to	**ALP33**
The electric window only works in one direction	**ALP34**
The central window closing function does not work at all	**ALP35**
The central window closing function does not work on all the windows	**ALP36**
The anti-pinch function does not work	**ALP37**
The one-touch closing mode does not close the window fully	**ALP38**

GETtheMANUALS.org

NOTES	Carry out fault finding on the **opening elements management**. Check that the door opening has been detected and that there is no ***fault in the connection for electric window operation***. Switch on the ignition.

Anti-pinch sunroof

The sunroof does not work at all	**ALP39**
The position memory does not work or the sunroof does not operate in all its axes	**ALP40**
The sunroof does not work in all directions	**ALP40**
The central sunroof closing function does not work	**ALP36**
The anti-pinch function does not work	**ALP41**
The roof does not close when the vehicle is being driven	**ALP42**

Electric windows

The child lock does not work	**ALP43**

Procedure for initialising the anti-pinch electric windows or sunroof — **PRO3**

For other faults with basic electric windows, consult the wiring diagrams.

GETtheMANUALS.org

ALP1	The instrument panel lights up and goes out alternately, the relays can be heard clicking

NOTES	The battery voltage is not sufficient to supply the system. Check the voltage.

AFTER REPAIR	Remember to clear the faults.

GETtheMANUALS.org

ALP2	The + accessories supply has not switched

NOTES	First carry out a function fault finding check. And check that the ***Card detected by UCH*** status is active when the card is inserted halfway. (otherwise, refer to the section on dealing with statuses).

Check that the two + accessories feed relays (relays no **19** and **23**) are switched.
Refer to the procedure for checking the relays in the passenger compartment fuse and relay box: **PRO1**.

↓

Check the wiring between the output of the passenger compartment fuse and relay box and the display, the radio, the steering column lock and the accessory sockets.

AFTER REPAIR	Remember to clear the stored faults. If the fuse and relay box has been replaced, remember to reset the shunts.

GETtheMANUALS.org

ALP3	The ignition is not switched on and the immobiliser warning light is flashing slowly on the instrument panel

In this case, the card fully inserted contact has not worked:
Carry out fault finding on the function, to ensure that the ***card fully inserted*** status is active when the card is fully inserted.
(Otherwise, refer to the section about dealing with statuses).

AFTER REPAIR	Remember to clear the faults.

GETtheMANUALS.org

ALP4	The ignition is not switched on and the immobiliser warning light is flashing quickly on the instrument panel

NOTES	The battery voltage is not sufficient to supply the system. Check the voltage.

In this case, the card has not been authenticated by the UCH:
– carry out fault finding on the function,
– check that the ***card code valid*** status is active (if not, refer to the section on dealing with statuses),
– Check that there are no faults.
Run the ***test UCH - card reader*** command and check to see if the connections are sound (if not refer to the procedure for dealing with this command).

AFTER REPAIR	Remember to clear the stored faults.

GETtheMANUALS.org

ALP5	The ignition is not switched on and the immobiliser warning light is continuously lit on the instrument panel

NOTES	Carry out a multiplex network fault finding check and function fault finding check first. In particular, check that the ***+ after ignition feed control status*** is inactive (if not, refer to the section on how to deal with statuses).

Move the steering wheel to check that the steering column lock lever has not been jammed by the steering column. Restart the operation by inserting the card fully.

↓

In the fault finding check, check the statuses of the steering column lock when the card is fully inserted into the reader.
In particular, check that the lock is functioning and that it is not faulty.

↓

Check the wiring between the UCH and the steering column lock.

Check the insulation, continuity and the absence of interference resistance on the following connection:

UCH **track 9** white connector → **track 4** steering column lock

Repair if necessary.

↓

Check the **+ after ignition feed** relay (no. 22). Refer to the test procedure **PRO1**.
Send an ignition on command from the diagnostic tool to test the relay.
If necessary, repair the wiring, replace the fuse, the relay or the passenger compartment fuses and relays box.

↓

With the card inserted halfway, use the diagnostic tool to send a **secure steering column** in the unlocked position command. Check that the command has been properly received by the steering column lock.

YES → Replace the column lock.
If the fault has not been solved, contact Techline.

↓

Refer to the procedure for dealing with this command.

AFTER REPAIR	Remember to clear the stored faults.

UCH73 ph1

GETtheMANUALS.org

ALP6	The ignition is not switched on and the immobiliser warning light is not lit on the instrument panel

NOTES	Carry out a multiplex network fault finding check and function fault finding check first. Check that there is no fault on the **+ after ignition feed** relay (relay no. 22).

Check the fuses.
Check **the continuity** between the output of the contact relay and the outputs of the passenger compartment fuse and relay box.
Check the wiring and connections on the passenger compartment fuse and relay box.

AFTER REPAIR	Remember to clear the stored faults. If the fuse and relay box has been replaced, remember to reset the shunts.

GETtheMANUALS.org

ALP7	The ignition is on (instrument panel lit) but the immobiliser warning light is continuously lit on the instrument panel

NOTES	Carry out a fault finding procedure on the multiplex network. Carry out a fault finding check on the injection system; check that there are no **internal** electronic faults and that the computer is **locked (protected)**. Carry out an engine immobiliser fault finding check; ensure that there is no **UCH internal electronic fault** and that the ***engine immobiliser*** status is active.

Switch off the ignition and wait for **1 minute**.
Switch on the ignition again.
Test the multiplex network.
Check the connections of all the computers on the multiplex network.
Check the wiring.
If there are no faults in the wiring, change the engine wiring first then the passenger compartment wiring.

↓

Look for possible faults in the injection computer.

↓

If the fault has not been solved, contact Techline.

AFTER REPAIR	Clear the fault memory. Deal with any other faults.

GETtheMANUALS.org

ALP8	Nothing happens when the engine start/stop button is pressed (the display and the radio stay on)

NOTES	It is essential that a fault finding procedure is carried out on the multiplex network. **Carry out a fault finding procedure on the immobiliser:** **In particular, check:** – that there is no fault, – that the press on the engine start/stop button has been detected, – that the vehicle is in neutral (in Park, Neutral or clutch disengaged), – that the engine has been detected as stopped, – that the vehicle is configured correctly with a manual or automatic gearbox. Check by slowly inserting the card that the ***card present*** status is active when the card is halfway and that the ***card fully inserted*** status is active when the card is fully inserted. If necessary, refer to the section on how to deal with the faults and statuses. Also ensure that the glow plugs "on" indicator light is not lit on the instrument panel.

Are you able to switch the + accessories feed on and off by inserting and removing the Renault card?

NO → See ALP2.

YES ↓

Contact Techline.

AFTER REPAIR	Remember to clear the faults and reconfigure the UCH if it has been replaced.

GETtheMANUALS.org

ALP9	When the start button is pressed, the display goes off, the radio cuts out, but the starter does not operate

Check the starter relay on the Passenger Compartment Fuse and Relay Box (Relay no. 21).
Refer to the relay checking procedure for the fuse and relay box **PRO1**.
Also check the + accessories feed relays (relays 19 and 23). The **starter relay is supplied by the open position of the "+ accessories supply" relay**.

↓

Check the wiring between the passenger compartment fuse and relay box and the starter.
Check the supply to the starter relay (pay attention to earth).
IMPORTANT
On certain automatic gearboxes, the starter relay feed runs via the gear lever switch (the circuit is open when the lever is in Drive or Reverse).
If necessary, repair the wiring.

↓

Ensure that the battery is capable of running the starter (check the voltage).
Check the earth strap.
Replace the starter if necessary.

AFTER REPAIR	Remember to clear the stored faults. If the fuse and relay box has been replaced, remember to reset the shunts.

GETtheMANUALS.org

ALP10	When the start button is pressed, the display goes out, the radio switches off, and the starter runs briefly but cuts out before the engine starts

NOTES	Carry out a fault finding procedure on the multiplex network. Carry out a fault finding procedure for the engine immobiliser. Run the starter.

At the point when the starter cuts out, is the **Engine running** status active?

YES → In this case, refer to the section on the **injection system.** Carry out fault finding on the injection system.
Check that the coolant temperature is consistent.

NO ↓

Check the relay and fuel pump are activated, as well as the **continuity and insulation** of the wiring in question.

↓

Check that the fuel arrives at the engine correctly.

↓

Refer to the section on the injection system for vehicle in question.

AFTER REPAIR	Remember to clear the stored faults. If the fuse and relay box has been replaced, remember to reset the shunts.

GETtheMANUALS.org

ALP11	The card is not locked in the reader when the engine is running

NOTES	Switch on the ignition.

Check that the card has been inserted into the card reader as far as it will go.
Run the command for locking the card.
If the card has not been locked, refer to the instructions on how to deal with this command.

AFTER REPAIR	Erase the stored faults.

GETtheMANUALS.org

ALP12	The vehicle does not stop when the button is pressed briefly but stops when the button is pressed repeatedly and rapidly

NOTES	Carry out fault finding on the ABS and ensure that there are no faults. Check that the speed is zero.

Check that the UCH has detected the start/stop button being pressed (immobiliser fault finding).

↓

Disconnect and reconnect the battery.
If the fault is still present, contact the Techline.

AFTER REPAIR	Disconnect and reconnect the battery. Replace the UCH if the fault is still present.

GETtheMANUALS.org

ALP13	The vehicle does not stop when the button is pressed briefly even when the button is pressed repeatedly and rapidly

NOTES	Carry out a fault finding procedure for the engine immobiliser. Check that the ***engine start/stop button*** status is active when the button is pressed

Disconnect and reconnect the battery.
If the fault is still present, contact the Techline.

AFTER REPAIR	After reconnecting the battery, initialise the electric windows and sunroof, press the "on" button of the radio and enter the secret code and set the clock to the correct time.

GETtheMANUALS.org

PRO1	Checking a fuse and relay box relay

NOTES	**Obtain the internal diagram of the passenger compartment fuse and relay box (BFR).** One side of the box holds the connectors for the BFR and the relays checked in this section. On the other side are the fuses and the UCH which controls the relays. To access the connectors between the UCH and the BFR, the UCH has to be disconnected. Connect the bornier to the passenger compartment fuse and relay box. The coil for all the relays is supplied on one side with a **+ 12 V feed** and on the other is controlled by the UCH.

Check that the relay feed is present on the passenger compartment fuse and relay box (check the grey and black 2-track connectors), check the wiring and the Battery Connection Unit and the fuses mounted on top.

↓

Test the relay:
Key:
A and B: coil terminals, relay control
C: supply input to the relay
D: relay output, supplied when a command is sent to the relay
E: relay output, supplied when no command is sent to the relay

Check the continuity between **tracks C** and **E**.
Supply the relay and check whether there is continuity between **C** and **D**.

IMPORTANT
In the direction of the current, there is a parallel coil diode: + battery feed at A and earth at B.

↓

Disconnect the battery.
Separate the UCH from the box.
fuse and relay box.

↓

(A)

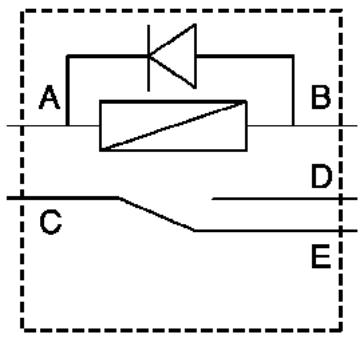

19533

AFTER REPAIR	After reconnecting the battery, initialise the electric windows and sunroof, press the "on" button of the radio and enter the secret code and set the clock to the correct time.

GETtheMANUALS.org

PRO1 CONTINUED	

A

On the passenger compartment fuse and relay box, check the continuity between the relay coil control track B and the corresponding track on connectors U1 or U2 depending on the relay (these connectors are only accessible when the UCH is disconnected).
Replace the fuse and relay box if necessary.

On the passenger compartment fuse and relay box, check **the continuity** between the other side of the relay coil A, the supply input on the switch C and the supply input on the passenger compartment fuse and relay box.
Also check **the continuity** between the relay output D and the fuses, then between the fuses and the passenger compartment fuse and relay box connectors.
Also check the fuses on the passenger compartment fuse and relay box.
Replace the passenger compartment fuse and relay box if necessary.

IMPORTANT
In certain cases the open position of relay E is used to supply the components:
– The starter relay is supplied by the open position of the + accessories supply relay.
(This is why the + accessories supply is interrupted during starting)
– The open position of the "+ ignition supply" goes to the UCH and is used to control the steering column lock.
In all these cases, also remember to check the passenger compartment fuse and relay box for continuity between track E and the corresponding track on the user.

AFTER REPAIR	After reconnecting the battery, initialise the electric windows and the sunroof. Press the "on" button on the radio, enter the secret code and set the clock to the correct time.

GETtheMANUALS.org

ALP14	No indicator lights working

NOTES	First carry out a function fault finding check. Switch on the ignition.

Press the hazard warning lights switch.
Check that the ***Hazard warning lights switch*** status is active.
If not refer to the section on dealing with this status.

↓

Replace the passenger compartment fuse and relay box.

AFTER REPAIR	After reconnecting the battery, initialise the electric windows and sunroof, press the "on" button of the radio and enter the secret code and set the clock to the correct time.

GETtheMANUALS.org

ALP15	Locking or unlocking does not work on any door, including the tailgate

NOTES	**Locking or unlocking does not work on any door, including the tailgate.**

Switch on the ignition. Check from the statuses that interior locking-unlocking button operations have been correctly detected by the UCH; if they have not, refer to the section on dealing with statuses.

↓

Switch off the ignition, and ensure that the doors are properly closed.
Check from the statuses that the card button operations have been correctly detected by the UCH; if they have not, refer to the section on dealing with statuses.

↓

Check the wiring between the locks and the UCH.

↓

Contact Techline.

AFTER REPAIR	Remember to clear the faults. If the UCH has been replaced, remember to reconfigure it and reallocate the cards.

GETtheMANUALS.org

ALP16	Locking or unlocking does not work on any door, but works on the tailgate

NOTES	First carry out a function fault finding check. Check that all the doors are properly closed (you can check that the interior lights are off or switch on the ignition to check on the display that none of the doors are open).

Check the **+ battery** supplies to the passenger compartment relay and fuse box.
Check the fuses in the Passenger Compartment Fuse and Relay box.

↓

Disconnect the battery, and disconnect the UCH from the Passenger Compartment Fuse and Relay box.
Refer to the procedure for checking the locking/unlocking double relay **PRO1**.
If the relay is faulty, replace the passenger compartment fuse and relay box.

↓

Check **the continuity** between tracks:

connector U1 **track 2** → **track B6** grey connector
connector U1 **track 1** → **track B5** grey connector
connector U1 **track 23** → **track B3** grey connector
connector U1 **track 20** → **track B2** grey connector
connector U1 **track 24** → **track B4** grey connector

on the terminals of the Passenger Compartment Fuse and Relay box.
If there is a fault, replace the passenger compartment fuse and relay box.

↓

Check the connectors on the fuse and relay box, and the continuity between the door locks and the fuse and relay box.
Check the locks (part number and operation).

↓

If none of the doors or the fuel filler flap work, contact the Techline.

AFTER REPAIR	Remember to clear the faults. If the UCH has been replaced, remember to reconfigure it and reallocate the cards.

GETtheMANUALS.org

ALP17	Locking or unlocking does not work on the tailgate or the rear window, but does work on the doors

NOTES	First carry out a function fault finding check. Check that all the doors are properly closed (you can check that the interior lights are off or switch on the ignition to check on the display that none of the doors are open). In particular, check that tailgate or rear screen control operations are correctly detected by the UCH; if not, refer to the section on dealing with statuses.

Remove the lock and close it by sliding a screwdriver into it; test the lock by connecting an **earth** and a **+ battery feed** to the motor terminals (for less than one second).
Replace the lock if necessary.

↓

Contact Techline.

AFTER REPAIR	Remember to clear the faults. If the UCH has been replaced, remember to reconfigure it and reallocate the cards.

GETtheMANUALS.org

ALP18	Locking or unlocking does not work on the passenger door or fuel filler flap, but works on the other doors

NOTES	First carry out a function fault finding check. Check that all the doors are properly closed (you can check that the interior lights are off or switch on the ignition to check on the display that none of the doors are open).

Check the **+ battery** supplies to the passenger compartment relay and fuse box.
Check the fuses in the Passenger Compartment Fuse and Relay box.

↓

Disconnect the battery, and disconnect the UCH from the Passenger Compartment Fuse and Relay box.
Refer to the procedure for checking the locking/unlocking double relay **PRO1**.
If the relay is faulty, replace the passenger compartment fuse and relay box.

↓

Check the connectors on the Fuse and Relay box, and continuity between the passenger door lock, the fuel filler flap and the Fuse and Relay box. Check the locks (part number and operation).

↓

Contact Techline.

AFTER REPAIR	Remember to clear the faults. If the UCH has been replaced, remember to reconfigure it and reallocate the cards.

GETtheMANUALS.org

ALP19	**Locking or unlocking does not work on the driver's door or rear doors, but works on the passenger door and the fuel filler flap**

NOTES	First carry out a function fault finding check. Check that all the doors are properly closed (you can check that the interior lights are off or switch on the ignition to check on the display that none of the doors are open). Check the UCH part number. Check that you have not fitted a UCH of lower specification than the original.

Check **the continuity** between tracks:

connector U1 **track 2** → **track B6** grey connector

connector U1 **track 1** → **track B5** grey connector

connector U1 **track 23** → **track B3** grey connector

connector U1 **track 20** → **track B2** grey connector

connector U1 **track 24** → **track B4** grey connector

on the terminals of the Passenger Compartment Fuse and Relay box.
In the event of a fault, replace the passenger compartment fuse and relay box.

↓

Check the connectors on the Fuse and Relay box, and **the continuity** between the door locks and the Fuse and Relay box.
Check the locks (part number and operation).

↓

If no doors work, contact the Techline.

AFTER REPAIR	Remember to clear the faults. If the UCH has been replaced, remember to reconfigure it and reallocate the cards.

GETtheMANUALS.org

ALP20	Locking or unlocking does not work on one door

NOTES	First carry out a function fault finding check. Check that all the doors are properly closed (you can check that the interior lights are off or switch on the ignition to check on the display that none of the doors are open).

Check **the continuity** between tracks:

connector U1 **track 2** → **track B6** grey connector

connector U1 **track 1** → **track B5** grey connector

connector U1 **track 23** → **track B3** grey connector

connector U1 **track 20** → **track B2** grey connector

connector U1 **track 24** → **track B4** grey connector

on the terminals of the Passenger Compartment Fuse and Relay box.
In the event of a fault, replace the passenger compartment fuse and relay box.

↓

Check the connectors on the Fuse and Relay box, and **the continuity** between the door locks and the Fuse and Relay box.

↓

If all the other doors work correctly, including the fuel filler flap.
Check that the lock latches in the striker panel correctly.
Replace the lock.

AFTER REPAIR	Remember to clear the faults. If the UCH has been replaced, remember to reconfigure it and reallocate the cards.

GETtheMANUALS.org

ALP21	The vehicle cannot be opened from inside

NOTES	First carry out a function fault finding check. Check that locking and unlocking using the Renault card are working. Check the configuration of the UCH (in particular, whether deadlocking is present).

Switch on the ignition, are the doors unlocked?
If yes, repeat the function fault finding check.

NO

Disconnect the battery, and disconnect the UCH from the Passenger Compartment Fuse and Relay box.
Check the locking-unlocking relay (***PRO2***).
Check **the continuity** between tracks:

connector U1 **track 2** → **track B6** grey connector
connector U1 **track 1** → **track B5** grey connector
connector U1 **track 23** → **track B3** grey connector
connector U1 **track 20** → **track B2** grey connector
connector U1 **track 24** → **track B4** grey connector

on the terminals of the Passenger Compartment Fuse and Relay box.
If the fault is still present, contact Techline.

Check the connectors on the Passenger Compartment Fuse and Relay box, and the **continuity** between the door locks and the Passenger Compartment Fuse and Relay box.

Check the locks and mounting of the interior handle.
Check that the locks latch in the striker plates correctly.
If no lock works, contact the Techline.
If at least one lock operates, replace the faulty lock(s).

AFTER REPAIR	Remember to clear the faults. If the UCH has been replaced, remember to reconfigure it and reallocate the cards.

GETtheMANUALS.org

ALP22	The interior handle locking does not work

NOTES	First carry out a function fault finding check. Check that all the doors are properly closed (you can check that the interior lights are off or switch on the ignition to check on the display that none of the doors are open). Check that the UCH is correctly configured ***with deadlocking***. Check the UCH conformity. Check that card button operations are correctly detected (see section on dealing with statuses).

Disconnect the battery, and disconnect the UCH from the Passenger Compartment Fuse and Relay box.
Check the locking-unlocking relay (***PRO1***).
Check **the continuity** between tracks:

connector U1 **track 2** → **track B6** grey connector
connector U1 **track 1** → **track B5** grey connector
connector U1 **track 23** → **track B3** grey connector
connector U1 **track 20** → **track B2** grey connector
connector U1 **track 24** → **track B4** grey connector

on the terminals of the Passenger Compartment Fuse and Relay box.
If there is a fault, contact the Techline.

↓

Check the connectors on the Passenger Compartment Fuse and Relay box, and the **continuity** between the door locks and the Passenger Compartment Fuse and Relay box.

↓

Check the locks.
Check that the locks latch in the striker plates correctly.
If no lock works, contact the Techline.
If at least one lock operates, replace the faulty lock(s).

AFTER REPAIR	Remember to clear the faults. If the UCH has been replaced, remember to reconfigure it and reallocate the cards.

GETtheMANUALS.org

ALP23	The rear interior handles cannot be locked from the driver's door (childproof lock)

NOTES	First carry out a function fault finding check. Check that the UCH correctly detects a child safety lock button operation. Check the UCH conformity (top of the range version necessary). Check that when the child safety lock button is pressed, the ***rear left- and right-hand door electric child safety lock*** statuses are active. If not, refer to the section on dealing with statuses.

Disconnect the battery, and disconnect the UCH from the Passenger Compartment Fuse and Relay box.
Check the locking-unlocking relay (***PRO1***).
Check **the continuity** between tracks:

connector U1 **track 2** → **track B6** grey connector
connector U1 **track 1** → **track B5** grey connector
connector U1 **track 23** → **track B3** grey connector
connector U1 **track 20** → **track B2** grey connector
connector U1 **track 24** → **track B4** grey connector

on the terminals of the Passenger Compartment Fuse and Relay box.
In the event of a fault, replace the passenger compartment fuse and relay box.

↓

Check the connectors on the Fuse and Relay box, and **the continuity** between the door locks and the Fuse and Relay box.
Check the connections between the UCH and the rear locks.

↓

Check the locks (part number and operation).
Check that the locks latch in the striker plates correctly.
If no lock works, contact the Techline.
If at least one lock operates, replace the faulty lock(s).

AFTER REPAIR	Remember to clear the faults. If the UCH has been replaced, remember to reconfigure it and reallocate the cards.

GETtheMANUALS.org

ALP24	Unlocking using the door handle is not possible or is difficult

NOTES	First carry out a function fault finding check. Check that all the doors are properly closed (you can check that the interior lights are off or switch on the ignition to check on the display that none of the doors are open). Also check that the optical sensor statuses are active when you place your hand behind the handle (if not, refer to the section on dealing with statuses). Check that the vehicle locks when **autolock** is pressed on the card. If not, refer to the corresponding ALP. Wait for the side-mounted repeaters to go out.

Place your hand behind a handle.
Check that status **ET162 Card near vehicle** is active.
If not, refer to the procedure for dealing with this status.

AFTER REPAIR	Remember to clear the faults. If the UCH has been replaced, remember to reconfigure it and reallocate the cards.

GETtheMANUALS.org

ALP25	Locking does not work when you move away from the vehicle

NOTES	First carry out a function fault finding check. Check that all the doors are properly closed (you can check that the interior lights are off or switch on the ignition to check on the display that none of the doors are open). Switch the ignition on and then off. Check the UCH configuration (check that the vehicle is configured ***with hands-free: CF010 is With***). Press the **autolock** button. Check that the corresponding status is active (if not, refer to the section on dealing with statuses).

Wait for the side-mounted repeaters to go out.
Unlock the vehicle by pulling a door handle.
(If the vehicle does not unlock, refer to **ALP24**).
Place the card on the roof. Wait a few seconds.
If the vehicle does not lock, replace the UCH.

AFTER REPAIR	Remember to clear the faults. If the UCH has been replaced, remember to reconfigure it and reallocate the cards.

GETtheMANUALS.org

ALP26	When you move away from the vehicle and it locks, there is no audible confirmation signal

NOTES	First carry out a function fault finding check. Check that all the doors are properly closed (you can check that the interior lights are off or switch on the ignition to check on the display that none of the doors are open). Check the UCH configuration (check that the vehicle is configured ***with hands-free: CF010 is With***).

Sound the horn.
If it does not work, check the fuse in the battery interface unit, check the wiring and the steering wheel contacts.
If necessary, replace the horn.

↓

In fault finding mode, enter the horn command.
In the event of a fault, refer to the section on dealing with this command.

AFTER REPAIR	Remember to clear the faults. If the UCH has been replaced, remember to reconfigure it and reallocate the cards.

GETtheMANUALS.org

ALP27	Automatic locking when the vehicle is in motion does not work

NOTES	First perform fault finding on the multiplex network, the function, the ABS and the airbag. Check that the UCH is configured with automatic locking when driving. Switch on the ignition, and press the lock side of the interior locking-unlocking button for several seconds (until the beep). Check that locking works correctly using the card.

AFTER REPAIR	Remember to clear the faults. If the UCH has been replaced, remember to reconfigure it and reallocate the cards.

GETtheMANUALS.org

PRO2	Checking the lock-unlock double relay

NOTES	This relay is soldered into the Passenger Compartment Fuse and Relay box. So **the slightest fault means the passenger compartment fuse and relay box has to be replaced**.

Check the power feeds and earth connection to the Passenger Compartment Fuse and Relay box.
Disconnect the battery.
Disconnect the UCH.
Check that relay output tracks (**A5** and **A4** on the grey connector) have a continuous earth connection.

↓

Reconnect the battery.
Connect a wire between the earth and connector U2 **track 8**. Check that the passenger compartment fuse and relay box output voltage (***track grey connector A4***) is **12 V**.
Connect a wire between the earth and connector U2 **track 10**. Check that the passenger compartment fuse and relay box output voltage (***track A5 grey connector***) is **12 V**.

AFTER REPAIR	Remember to clear the faults. If the UCH has been replaced, remember to reconfigure it and reallocate the cards.

GETtheMANUALS.org

TEST1	Operating principle of the switches

The switches of the anti-pinch electric window switch earths.
The switches are dual contact types (i.e. four contacts: two closing and two opening):
1st raising contact: normal closing,
2nd rising contact: change to one-touch mode: window rises fully.
Likewise for descending.
By contrast, there are only two control wires to the motors: one for rising and one for descending.
Operation is therefore as follows:

1st rising contact	→	rising connection is earthed
2nd rising contact	→	**descending connection** and rising connection are earthed
1st descending contact	→	rising connection is earthed
2nd descending contact	→	**rising connection** and rising connection are earthed

IMPORTANT
the cables of the driver's side switch go through the switch on the door concerned before going to the electric window (except for the electric front windows with driver's seat and door mirror position memory system).
Conversely, the wires from the switch in the door concerned pass through the switch on the driver's door before returning to the electric window of the door concerned.
It is essential that you obtain the window winder wiring diagram for the vehicle.

GETtheMANUALS.org

ALP28	The electric window does not work at all

NOTES	Carry out a fault finding procedure on the **door management** function. In particular check that there are no faults in the ***electric window operation connection***. Switch on the ignition.

Switch off the ignition, open, then re-close the driver's door.
Wait **30 seconds**. Switch the ignition back on and try to move the window and see if the electric window is being slowed down too much by the friction in the frame.

↓

Check the feeds to the electric windows (**track 3** for earth and **track 4** for the + battery feed to the anti-pinch electric windows without driver's seat and door mirror position memory system).
In particular, check the position of the shunts on the passenger compartment relay and fuse box.
(The one-touch electric windows are fed by + battery feed).

↓

Check the connection between the UCH (black connector, **track 22**) and the electric window (**track 6**).
Check the continuity of the connection and ensure that there is no short circuit to + battery feed (remember to disconnect **all** the anti-pinch windows **and the sunroof**).
IMPORTANT
If there is a fault with an anti-pinch electric window with door mirror position memory system, check the connection between the UCH (black connector, **track 22**) and the driver's electric window (**track 27**).
Then, for the passenger's window winder, **the continuity** of the connections between the two front electric windows.
(continuity between **tracks 19** of both electric windows and between **tracks 29** of both electric windows).

↓

AFTER REPAIR	Remember to clear the faults. Remember to initialise all the electric windows and the sunroof after a repair.

GETtheMANUALS.org

ALP28 CONTINUED	

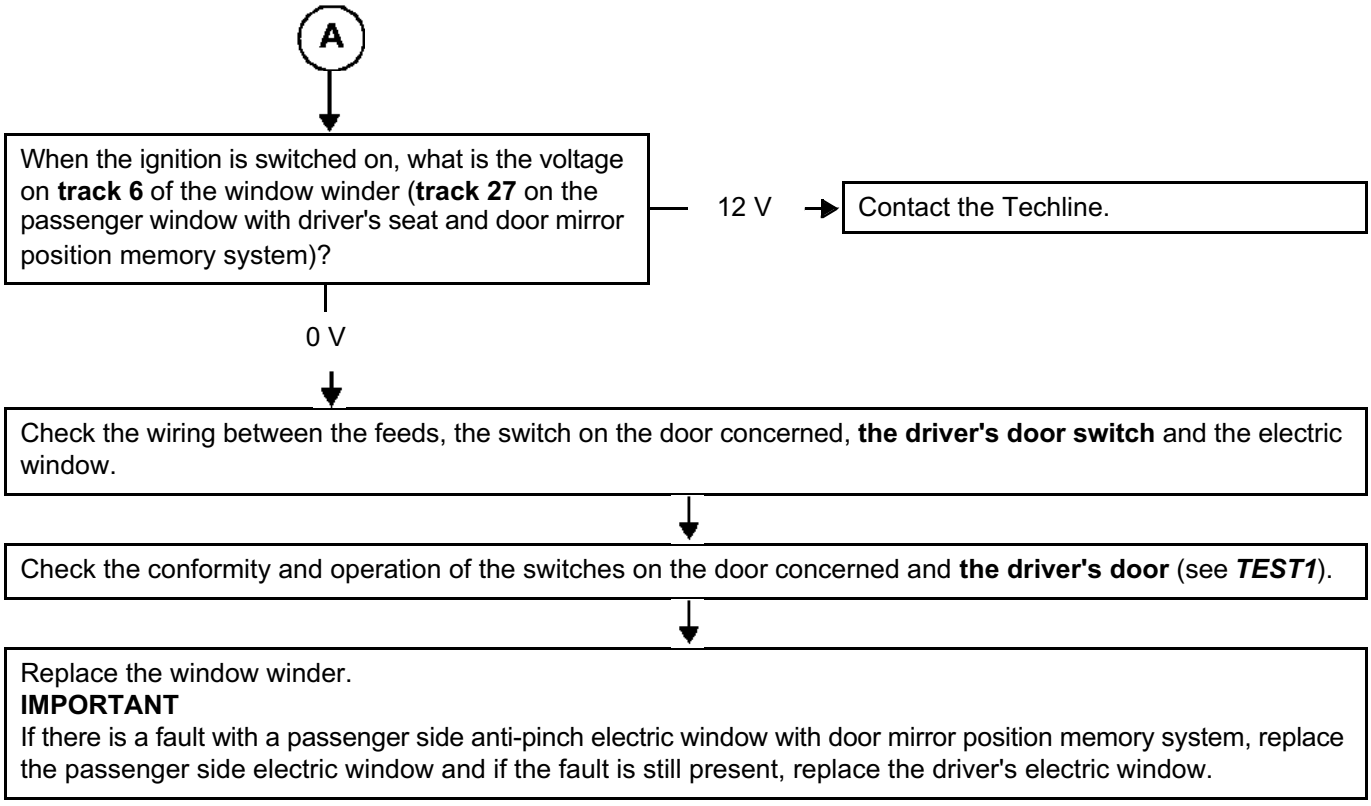

AFTER REPAIR	Remember to clear the faults. Remember to initialise all the electric windows and the sunroof after a repair.

GETtheMANUALS.org

ALP29	The electric window opens and closes jerkily

NOTES	Check to see there is too much friction between the window and the frame and consult the window winder initialisation procedure in **PRO3**.

AFTER REPAIR	Remember to clear the faults. Remember to initialise all the electric windows and the sunroof after a repair.

GETtheMANUALS.org

ALP30	The electric window does not work in one-touch mode

NOTES	Check that the electric windows work in normal mode (switch is pressed continuously) for both opening and closing operations. If not, refer to **ALP28**. If they operate jerkily, refer to **ALP29**.

Check the conformity of the switches (see ***TEST1***).
Replace the switches.

AFTER REPAIR	Remember to clear the faults. Remember to initialise all the electric windows and the sunroof after a repair.

GETtheMANUALS.org

ALP31	The electric window only works from the driver's door

NOTES	Check that the child safety locks are not set (the switches at the rear are lit up, the child safety switch on the driver's door is not pressed in). Check that the electric window works properly from the driver's door for both opening and closing operations.

Check the wiring and in particular **the continuity and insulation of the connections** between the **driver's door switch** and the electric window concerned.

NO

↓

Replace the switch on the door concerned.

AFTER REPAIR	Remember to clear the faults. Remember to initialise all the electric windows and the sunroof after a repair.

GETtheMANUALS.org

ALP32	The child safety lock does not work

NOTES	Check that the child safety locks are not set (the switches at the rear are lit up, the child safety switch on the driver's door is not pressed in). Check that the electric window works properly from the driver's door for both opening and closing operations.

Check the **insulation and continuity** of the wiring between the child safety lock control (**track B2**) and earth.
Check **the insulation and continuity** of the wiring between the child safety lock control and the rear switches:

track B1 of the child safety lock control ⟶ **track A2** of the rear window controls

AFTER REPAIR	Remember to clear the faults. Remember to initialise all the electric windows and the sunroof after a repair.

GETtheMANUALS.org

ALP33	The electric window can only be operated from the door that it is fitted to

NOTES	Check that the electric window operates properly from the door concerned for both closing and opening operations.

Check the wiring and in particular **the continuity and insulation** of the connections between the switch **of the door concerned** and the electric window concerned.
IMPORTANT
If there is a fault with a passenger side anti-pinch electric window with door mirror position memory system, check the connection between the two front windows (continuity between **tracks 19** of the two electric windows and between **tracks 29** of the two electric windows) and the connection between the passenger switch on the driver's door and the driver's electric window.

↓

Replace the switch on the driver's door.

AFTER REPAIR	Remember to clear the faults. Remember to initialise all the electric windows and the sunroof after a repair.

GETtheMANUALS.org

ALP34	The electric window only works in one direction

NOTES	Switch on the ignition.

Check the operation of the switches (consult the information in ***TEST1***).

↓

Check the wiring and in particular **the continuity and insulation of the connections** between the switches and the electric window and **the continuity** between the two switches (those on the driver's door and the door concerned).
IMPORTANT
If there is a fault with the passenger side anti-pinch electric window with door mirror position memory system, check the connection between the passenger switch on the driver's door and the driver's electric window.

↓

Check that the mechanism is not being jammed by friction against the door.

↓

Replace the window winder.

AFTER REPAIR	Remember to clear the faults. Remember to initialise all the electric windows and the sunroof after a repair.

GETtheMANUALS.org

ALP35	The central closing function does not work at all

NOTES	Check that the vehicle is fitted with four anti-pinch electric windows. Check that the electric windows operate properly in both normal and one-touch mode.

Carry out a fault finding procedure on the **door management system**:
Switch off the ignition, close the doors and check that the long press on the card is registered in the statuses.

NO → Refer to the section on how to deal with the statuses

YES

In the **door management** function fault finding procedure, check that the vehicle is configured for **centralised window closing**.

NO → Change the parameters.

YES

Switch the ignition on, then switch it off.
Do the four window winders still work?

NO → Check the position of the shunt for the passenger side electric window and the shunt for the rear electric windows on the relay and fuse box.

YES

Disconnect the UCH.
Measure the voltage on **track 6** of the electric windows (**tracks 27** for the driver's electric window with driver's seat and door mirror position memory system).
Is the voltage on the wire at the electric window **12 V**?

NO → The cable in question is short circuiting to earth.
Disconnect the electric windows one by one, and the sunroof, to locate the fault

YES

Contact Techline.

AFTER REPAIR	Remember to clear the faults. Remember to initialise all the electric windows and the sunroof after a repair. If the UCH has been replaced, remember to reconfigure it.

GETtheMANUALS.org

ALP36	The centralised window closing function does not work on all the windows. The central sunroof closing function does not work

NOTES	**Check that the electric windows concerned are anti-pinch electric windows.** Check that the electric windows or the sunroof work in normal mode, in one-touch mode and in anti-pinch mode. (Otherwise, first consult the corresponding **ALP**). Check that the vehicle is fitted with four anti-pinch, one-touch electric windows (if not the function is not activated).

Switch the ignition on, then switch it off.
Are the four electric windows/sunroof still working?

NO → Check the position of the passenger electric window shunt and the rear window shunt on the passenger compartment fuse and relay box (the supply must be a **+ battery feed**).

YES

↓

Measure the voltage at the terminals of the electric windows unit (**track 6** for the anti-pinch electric window and **track 27** of the driver's electric window in the case of electric windows with driver's seat and door mirror position memory system.
Is the voltage approximately **12 V**?

NO → The wire in question is short circuiting to earth between the terminals of the unit concerned and the wire joint.

YES

↓

Replace the electric window or sunroof unit concerned.

AFTER REPAIR	Remember to clear the faults. Remember to initialise all the electric windows and the sunroof after a repair.

GETtheMANUALS.org

ALP37	The anti-pinch function does not work

NOTES	Check that the electric windows work properly in normal mode and one-touch mode (if not, see **ALP30**).

Replace the window winder.

AFTER REPAIR	Remember to clear the faults. Remember to initialise all the electric windows and the sunroof after a repair.

GETtheMANUALS.org

ALP38	The one-touch mode does not close the window fully

NOTES	Check that the electric windows operate properly in both normal and one-touch mode.

Eliminate the friction when the electric window is closing (if there is too much friction, it could be that the electric window has been programmed to an incorrect upper stop).
Repeat the initialisation procedure (***PRO3***).

AFTER REPAIR	Remember to clear the faults. Remember to initialise all the electric windows and the sunroof after a repair.

GETtheMANUALS.org

ALP39	The sunroof does not operate at all

NOTES	Switch on the ignition. Initialise the sunroof (***PRO3***).

Check the feeds to the sunroof (+ battery feed: **track 7** and earth: **track 10**).

↓

Check the connection between the UCH (**track 22** of the black connector) and the sunroof (**track 9**).
Check the **insulation and continuity** of the connection and check that there is no short circuit to + battery feed (remember to disconnect **all** the anti-pinch electric windows **and the sunroof**):
IMPORTANT
The sunroof motor and the control are connected to the roof wiring by means of an intermediate wiring harness.

↓

Disconnect the sunroof motor.
When the ignition is on, is the voltage on **track 9** of the sunroof motor **0 V**?

NO → Contact Techline.

YES

↓

Replace the electric window or sunroof unit concerned.

↓

(A)

AFTER REPAIR	Remember to clear the faults. Remember to initialise all the electric windows and the sunroof after a repair.

GETtheMANUALS.org

ALP39 CONTINUED	

A

Check the wiring between the control and the sunroof.
Check **the continuity and insulation** of the following connections:

Track 1 of the control	→	**track 1** of the sunroof motor
Track 2 of the control	→	**track 2** of the sunroof motor
Track 3 of the control	→	**track 3** of the sunroof motor
Track 5 of the control	→	**track 4** of the sunroof motor
Track 6 of the control	→	**track 5** of the sunroof motor

Check the conformity and operation of the control.

Check that there is no friction when the sunroof is closing.
If necessary, disconnect the sunroof motor and try to run it with no load (remember to return it to its initial position before reconnecting it).
Replace the sunroof.

AFTER REPAIR	Remember to clear the faults. Remember to initialise all the electric windows and the sunroof after a repair.

GETtheMANUALS.org

ALP40	The position memory function does not work Or The sunroof does not work in all directions

NOTES	Check that the sunroof is operating properly in at least one direction.

Check the wiring between the control and the sunroof.
Check **the continuity and insulation** of the following connections:

Track 1 of the control	→	**track 1** of the sunroof motor
Track 2 of the control	→	**track 2** of the sunroof motor
Track 3 of the control	→	**track 3** of the sunroof motor
Track 5 of the control	→	**track 4** of the sunroof motor
Track 6 of the control	→	**track 5** of the sunroof motor

NO

↓

Check the conformity and operation of the control.
Replace the control.

AFTER REPAIR	Remember to clear the faults. Remember to initialise all the electric windows and the sunroof after a repair.

GETtheMANUALS.org

ALP41	The anti-pinch function does not work

NOTES	Repeat the initialisation procedure for the system (***PRO3***).

AFTER REPAIR	Remember to clear the faults. Remember to initialise all the electric windows and the sunroof after a repair.

GETtheMANUALS.org

ALP42	The roof does not close when the vehicle is being driven

NOTES	Check that the sunroof works properly when the vehicle is stationary.

Check the **insulation and continuity of the connection** between the anti-lock braking system (**track 39**) and the sunroof (**tracks 8** of the sunroof motor).

↓

Disconnect the sunroof motor.
Drive and measure the signal on the connection with an oscilloscope (**track 8**).
The measured signal frequency **x 18/25** gives an approximate vehicle speed.
Is the calculated speed consistent?

YES → Check that there is not too much friction when the sunroof is closing.
Replace the sunroof unit.

NO

↓

Check the **insulation of the connection** between the anti-lock braking system (**track 39**) and the sunroof (**tracks 8** of the sunroof motor). Is there a short circuit?

NO → If the vehicle speed is displayed correctly on the instrument panel, replace the anti-lock braking system.
If not, carry out a fault finding procedure on the anti-lock braking system.

YES

↓

Remember to disconnect the other components connected to this connection (radio, parking aid).

AFTER REPAIR	Remember to clear the faults. Remember to initialise all the electric windows and the sunroof after a repair.

GETtheMANUALS.org

ALP43	The child safety lock does not work

Switch on the ignition.
Check that the relay on the fuse box attached to the side of the passenger compartment relay and fuse box is closed when the child safety locks are not engaged.
And open when the childproof locks are engaged.
Is the relay working correctly?

YES	Check that there is an earth connection to the relay and that it goes to the electric window switches. **IMPORTANT** The output cable on the relay goes to the relay and fuse box, **track CGB4 A2**, the cross member (via a diode) and the spring **track CGB4 A4** in order to go to the switches (if you test the continuity and the circuit is not continuous, first try by reversing the two probes on the multimeter.).
NO	Check the operation of the switch (when the switch is pressed, a circuit connected to earth will open). Check the wiring between the **track** of the relay coil and the switch. Check the relay feed and the relay.

AFTER REPAIR	Remember to clear the faults. Remember to initialise all the electric windows and the sunroof after a repair.

GETtheMANUALS.org

PRO3	Procedure for initialising the anti-pinch electric windows or sunroof

Anti-pinch electric windows

Switch on the ignition.
Close the window up to the upper stop. Keep the **close** control pressed for more than **3 seconds**.
The electric window cannot go any further, it stores the upper stop and is initialised.

Anti-pinch sunroof

Switch on the ignition.
Turn the sunroof control to the left as far as it will go.
Keep the control pressed for approximately **4 seconds**.
The sunroof will open up halfway, come back down a short way, then return to its maximum open position.
Release the switch.
Press the switch again within **5 seconds** and keep the control pressed until the sunroof opens fully then closes again.
If the switch is released during this phase, the procedure must be repeated.

AFTER REPAIR	Remember to clear the faults. Remember to initialise all the electric windows and the sunroof after a repair.

GETtheMANUALS.org

SC023	UCH - CARD READER CONNECTIONS TEST

NOTES	There must be no present or stored faults. Apply this procedure if difficulties occur when reading the card.

Procedure:
Establish dialogue with the **UCH**.
Select the **Command mode** menu.
Select the **Specific command** menu.
Select line **SC023 UCH - card reader connection test**
Confirm the steps described in the scenario.
End of procedure.
The result of the command should be: **Connections correct** or **Connections faulty**.

Connections faulty.

Check the condition and connection of the black **P100** 40-track connector of the **UCH** and the card reader connector.

Check the insulation, continuity and the absence of interference resistance on the following connections:

UCH P100 black connector (40 tracks), brown connection strip **track 6** → **track 1** card reader

UCH P100 black connector (40 tracks), brown connection strip **track 19** → **track 4** card reader

Check for earth on **track 8** of the card reader switch.
Check for **+ battery feed** on **track 2** of the card reader switch.
Repair if necessary.

If the fault is still present, replace the card reader.

AFTER REPAIR	Carry out a fault finding procedure on the system. Clear the fault memory. Deal with any other faults.

GETtheMANUALS.org

VEL SATIS

8 Electrical equipment

87D ELECTRIC WINDOWS - SUNROOF

Fault finding - Customer complaints	87D - 1
Fault finding charts	87D - 3

BJ0E - BJ0J - BJ0K - BJ0M - BJ0P - BJ0V

77 11 311 302 **FEBRUARY 2006** **EDITION ANGLAISE**

"The repair procedures given by the manufacturer in this document are based on the technical specifications current when it was prepared.

The methods may be modified as a result of changes introduced by the manufacturer in the production of the various component units and accessories from which his vehicles are constructed."

All rights reserved by Renault s.a.s.

Copying or translating, in part or in full, of this document or use of the service part reference numbering system is forbidden without the prior written authority of Renault s.a.s.

© Renault s.a.s. 2006

GETtheMANUALS.org

NOTES	Carry out a fault finding procedure on the **door management** function. Check that the door opening action has been detected and that there is no ***electric window operation connection fault***. Switch on the ignition.

In the customer complaints section, a distinction is made between:
- basic electric windows
- anti-pinch electric windows
- anti-pinch sunroofs

If there are several faults, deal with them in the order shown below

Anti-pinch electric windows

Operating principle of the switches	**TEST 1**
The electric window does not work at all	**CHART 1**
The electric window opens and closes jerkily	**CHART 2**
The electric window does not work in one-touch mode	**CHART 3**
The electric window can only be operated from the driver's door	**CHART 4**
The child lock does not work	**CHART 5**
The electric window can only be operated from the door that it is fitted to	**CHART 6**
The electric window only works in one direction	**CHART 7**
The central window closing function does not work at all	**CHART 8**
The central window closing function does not work on all the windows	**CHART 9**
The anti-pinch function does not work	**CHART 10**
The one-touch closing function does not close the window fully	**CHART 11**

GETtheMANUALS.org

Anti-pinch sunroof

- The sunroof does not work at all — CHART 12
- The position memory function does not work — CHART 13
- The sunroof does not work in all directions — CHART 13
- The central sunroof closing function does not work — CHART 9
- The anti-pinch function does not work — CHART 14
- The roof does not close when the vehicle is being driven — CHART 15

Electric windows

- The child lock does not work — CHART 16

Procedure for initializing the anti-pinch electric windows or sunroof — PRO 1

For other problems with basic electric windows, consult the wiring diagrams

GETtheMANUALS.org

TEST 1	Operating principle of the switches

The switches of the anti-pinch electric windows switch earths.

The switches are dual contact types (i.e. four contacts: two closing and two opening):

1st closing contact: normal closing
2nd closing contact: one-touch mode: window closes fully.

Likewise for opening.

By contrast, there are only two control cables which go to the motors: one for closing and one for opening.

Operation is therefore as follows:

1st closing contact → closing connection is earthed
2nd closing contact → opening connection **and closing connection** are earthed

1st opening contact → opening connection is earthed
2nd opening contact → opening connection **and closing connection** are earthed

WARNING: the cables of the driver's side switch pass through the switch on the door concerned before going to the electric window (except for the electric front windows with driver's seat and rear-view mirror position memory system).

Conversely, the cables of the switch in the door concerned go through the switch on the driver's door before returning to the electric window of the door concerned.

It is essential that you obtain the vehicle's electric windows wiring diagram.

GETtheMANUALS.org

CHART 1	The electric window does not work at all

NOTES	Carry out a fault finding procedure on the **door management** function. In particular, check that there are no faults in the ***electric window operation connection***. Switch on the ignition.

Switch off the ignition, open, then re-close the driver's door.
Wait **30 seconds**. Switch the ignition back on and try to move the window and see if the electric window is being slowed down
too much by the friction in the frame.

↓

Check the feeds to the electric windows (**track 3** for earth and **track 4** for the + battery feed to the anti-pinch electric windows without driver's seat and rear-view mirror position memory system).
In particular, check the position of the shunts on the passenger compartment relay and fuse box.
(The one-touch electric windows are fed by + battery feed).

↓

Check the connection between the UCH (black connector, **track 22**) and the electric window (**track 6**).

Check the continuity of the connection and ensure that there is no short circuit to + battery feed (remember to disconnect **all** the anti-pinch electric windows **and the sunroof**).

Important: if there is a problem with an anti-pinch electric window with rear-view mirror position memory system, check the connection between the UCH (black connector, **track 22**) and the driver's electric window (**track 27**). Then, for the passenger side electric window, check **the continuity** of the connections between the two front electric windows.
(continuity between **tracks 19** of both electric windows and between **tracks 29** of both electric windows).

↓

GETtheMANUALS.org

CHART 1 CONTINUED 1	

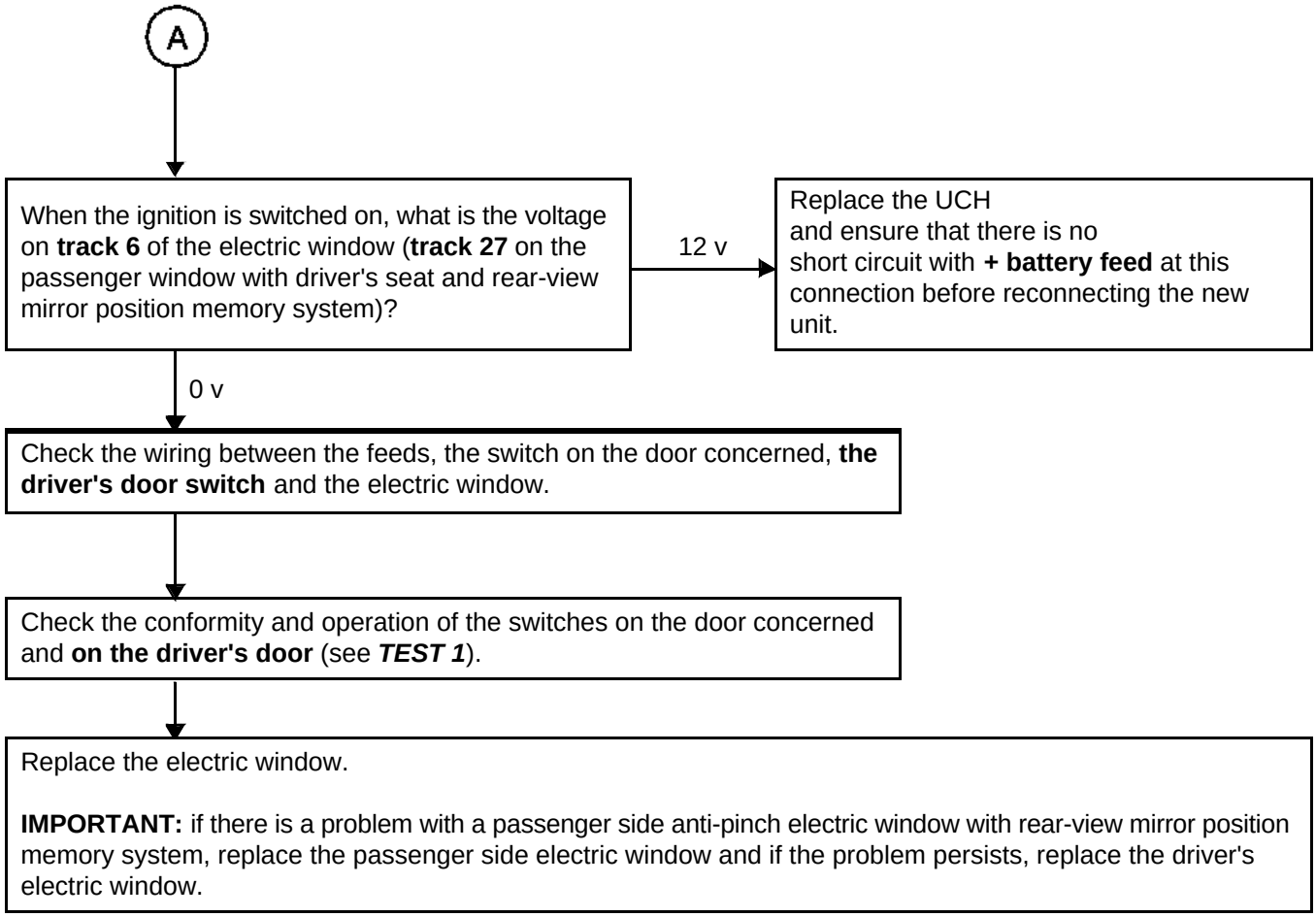

AFTER REPAIR	Remember to initialize all the electric windows and the sunroof after a repair.

GETtheMANUALS.org

CHART 2	**The electric window opens and closes jerkily**

NOTES	Check to see if it is just a matter of too much friction between the window and the frame and consult the electric window initialisation procedure in **PRO 1**

GETtheMANUALS.org

CHART 3	**The electric window does not work in one-touch mode**

NOTES	Ensure that the electric windows work in normal mode (switch is pressed continuously) for both opening and closing operations. If not, refer to **CHART 1.** If they operate jerkily, refer to **CHART 2.**

Check the conformity of the switches (see ***TEST 1***).

Replace the switches

GETtheMANUALS.org

CHART 4	**The electric window only works from the driver's door**

NOTES	Check that the childproof locks are not on (the switches at the rear are lit up, the child safety switch on the driver's door is not pressed in). Ensure that the electric window works properly from the driver's door for both opening and closing operations.

Check the wiring and in particular **the continuity and insulation of the connections** between the **driver's door switch** and the electric window concerned.

no

Replace the switch on the door concerned.

GETtheMANUALS.org

CHART 5	The child lock does not work

Check **the insulation and the continuity** of the wiring between the child lock control (**track B2**) and its earth.
Check **the insulation and continuity** of the wiring between the child lock control and the rear switches:

track B1 of the child lock control ⟶ **track A2** of the rear window controls

GETtheMANUALS.org

CHART 6	**The electric window can only be operated from the door that it is fitted to**

NOTES	Ensure that the electric window operates properly from the door concerned for both closing and opening operations.

Check the wiring and in particular **the continuity and insulation** of the connections between the **switch of the door concerned** and the electric window concerned.

Important: if there is a problem with a passenger side anti-pinch electric window with rear-view mirror position memory system, check the connection between the two front electric windows (continuity between **tracks 19** of both electric windows and between **tracks 29** of both electric windows) and the connection between the passenger switch on the driver's door and the driver's electric window.

↓

Replace the switch on the driver's door.

GETtheMANUALS.org

CHART 7	**The electric window only works in one direction**

NOTES	Switch on the ignition.

Check the operation of the switches (refer to the information in ***TEST 1***).

↓

Check the wiring and in particular **the continuity and insulation of the connections** between the switches and the electric window and **the continuity** between the two switches (those on the driver's door and the door concerned).

Important: if there is a problem with the passenger-side anti-pinch electric window with rear-view mirror position memory system, check the connection between the passenger switch on the driver's door and the driver's electric window.

↓

Check that the mechanism is not being jammed by friction against the door.

↓

Replace the electric window.

AFTER REPAIR	Remember to initialize all the electric windows and the sunroof after a repair.

GETtheMANUALS.org

CHART 8	The central closing function does not work at all

NOTES	Check that the vehicle is fitted with four anti-pinch electric windows. Ensure that the electric windows operate properly in both normal and one-touch mode.

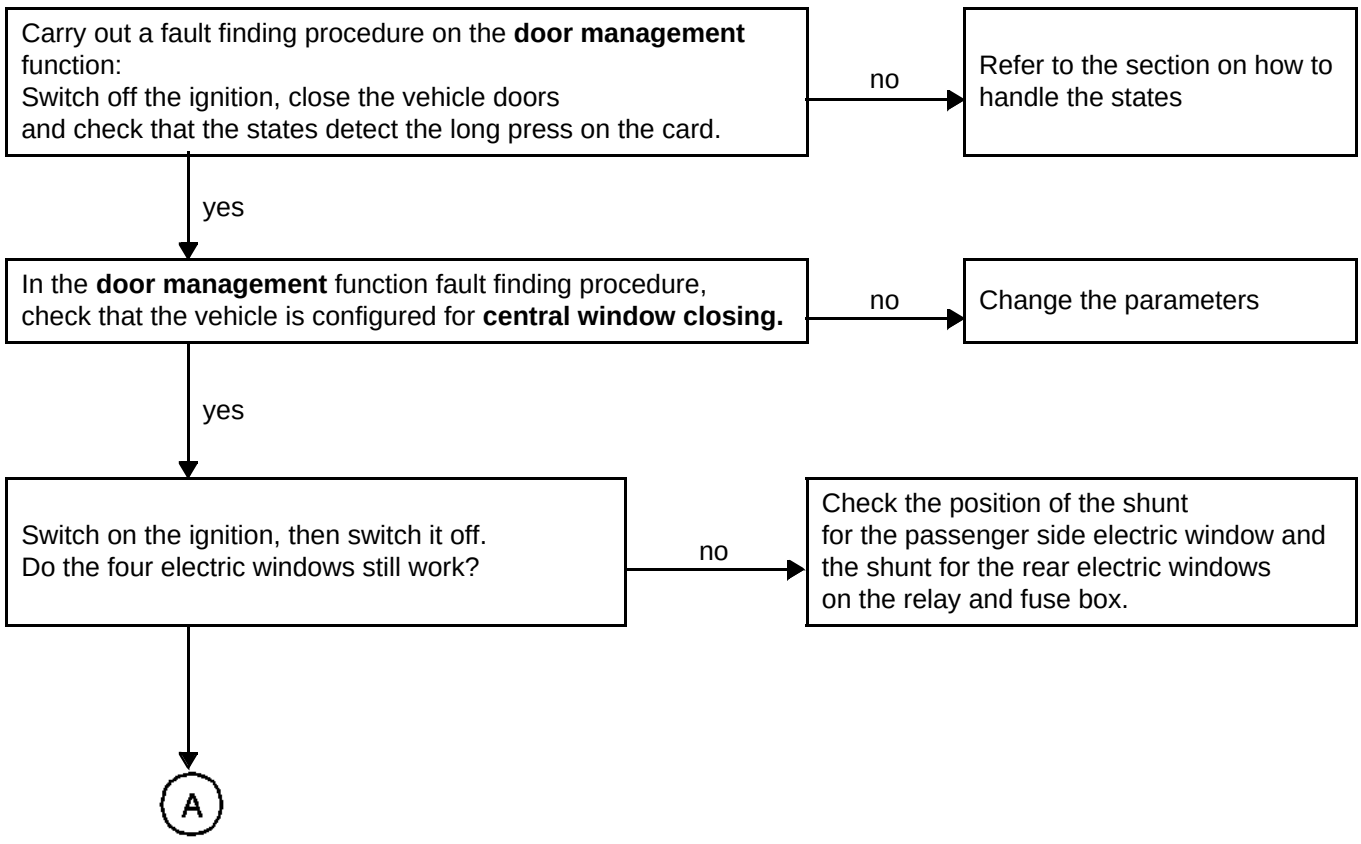

GETtheMANUALS.org

CHART 8 CONTINUED 1	

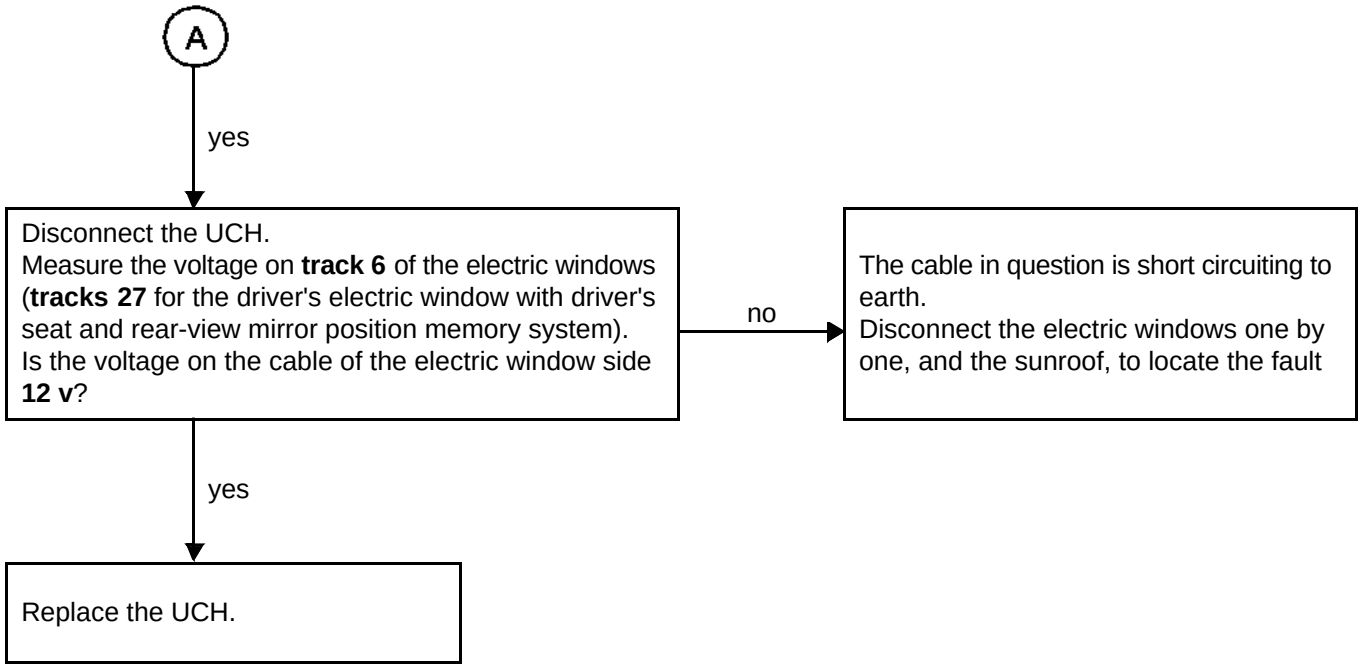

AFTER REPAIR	Remember to initialize all the electric windows and the sunroof after a repair. If the UCH has been replaced, remember to reconfigure it.

GETtheMANUALS.org

CHART 9	**The central window closing function does not work on all the windows.** **The central sunroof closing function does not work.**

NOTES	**Check that the electric windows concerned are anti-pinch electric windows.** Ensure that the electric windows or the sunroof work in normal mode, in one-touch mode and in anti-pinch mode. (If not, first consult the corresponding **CHART**). Ensure that the vehicle is fitted with four anti-pinch, one-touch electric windows (if not the function is not activated)

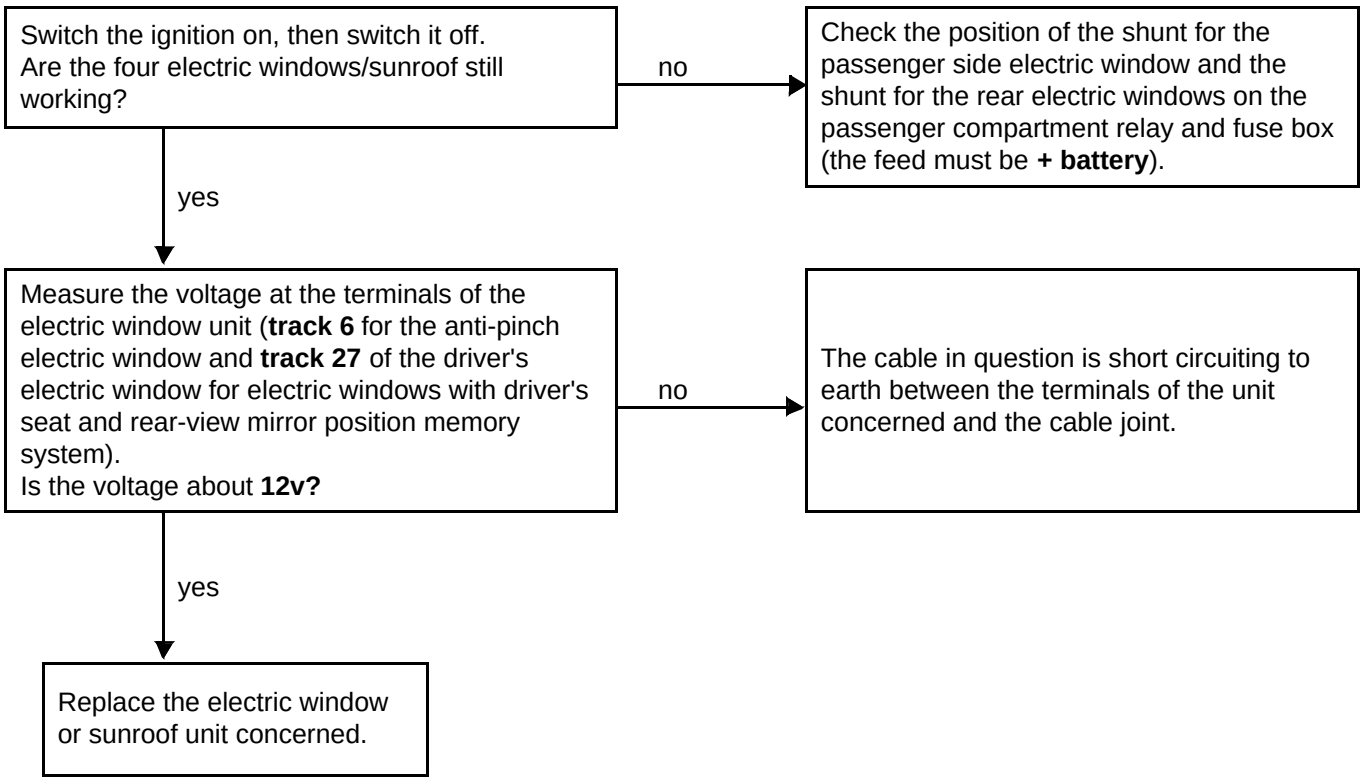

AFTER REPAIR	Remember to initialize all the electric windows and the sunroof after a repair.

GETtheMANUALS.org

CHART 10	The anti-pinch function does not work

NOTES	Ensure that the electric windows work properly in normal mode and one-touch mode (if not, see **CHART 3**).

Replace the electric window.

GETtheMANUALS.org

CHART 11	**The one-touch closing function does not close the window fully**

NOTES	Ensure that the electric windows operate properly in both normal and one-touch mode.

Eliminate the friction when the electric window is closing (if there is too much friction, it could be that the electric window has been programmed to an incorrect upper stop).
Repeat the initialisation procedure (***PRO 1***).

GETtheMANUALS.org

CHART 12	The sunroof does not work at all

NOTES	Switch on the ignition. Initialize the sunroof (***PRO 1***).

Check the feeds to the sunroof (+ battery: **track 7** and earth: **track 10**).

↓

Check the connection between the UCH (**track 22** of the black connector) and the sunroof (**track 9**).
Check **the insulation and continuity** of the connection and ensure that there is no short circuit to the + battery feed
(remember to disconnect **all** the anti-pinch electric windows **and the sunroof**):

Important: the sunroof motor and the control are connected to the roof wiring by an intermediate wiring loom.

↓

Disconnect the sunroof motor.
When the ignition is on, is the voltage on **track 9** of the sunroof motor **0 v**?

no → Replace the UCH and ensure that there is no short circuit with the + battery feed at this connection before reconnecting the new unit.

yes ↓

(A)

GETtheMANUALS.org

CHART 12 CONTINUED 1	

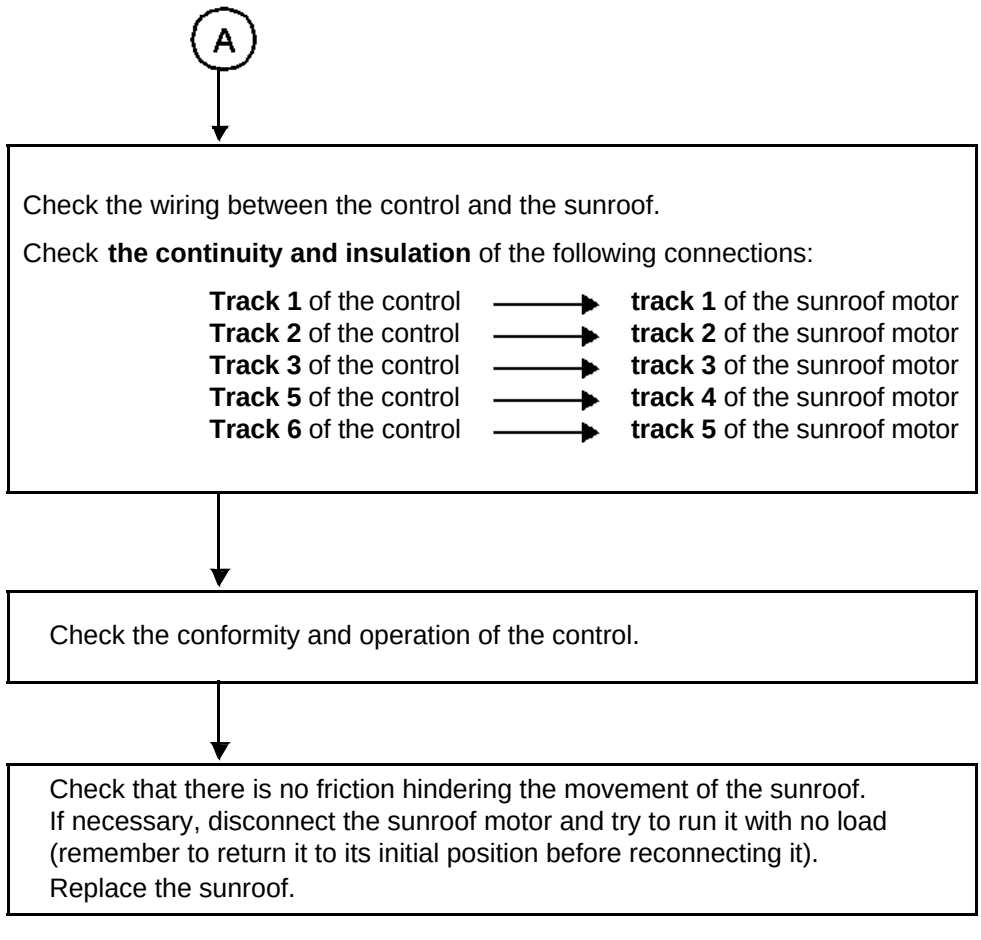

AFTER REPAIR	Remember to initialize all the electric windows and the sunroof after a repair.

GETtheMANUALS.org

CHART 13	**The position memory function does not work** **Or** **The sunroof does not work in all directions**

NOTES	Ensure that the sunroof is operating properly in at least one direction.

Check the wiring between the control and the sunroof.

Check **the continuity and insulation** of the following connections:

Track 1 of the control	→	**track 1** of the sunroof motor
Track 2 of the control	→	**track 2** of the sunroof motor
Track 3 of the control	→	**track 3** of the sunroof motor
Track 5 of the control	→	**track 4** of the sunroof motor
Track 6 of the control	→	**track 5** of the sunroof motor

no

Check the conformity and operation of the control
Replace the control.

GETtheMANUALS.org

CHART 14	The anti-pinch function does not work

NOTES	Repeat the initialization procedure for the system (***PRO 1***).

GETtheMANUALS.org

CHART 15	The roof does not close when driving

NOTES	Check that the sunroof works properly when the vehicle is stationary.

Check **the insulation and continuity of the connection** between the ABS (**track 39**) and the sunroof (**tracks 8** of the sunroof motor).

Disconnect the sunroof motor.
Drive and measure the signal on the connection using an oscilloscope (**track 8**).
The measured signal frequency **x 18/25** gives an approximate vehicle speed.
Is the calculated speed consistent?

yes → Check whether there is too much friction when the sunroof is closing. Replace the sunroof unit.

no

Check **the insulation of the connection** between the ABS (**track 39**) and the sunroof (**tracks 8** of the sunroof motor).
Is there a short circuit?

no → If the vehicle speed is displayed correctly on the instrument panel, replace the ABS system.
If not, carry out a fault finding procedure on the ABS system.

yes

Remember to disconnect the other components connected
to this connection (radio, parking aid).

GETtheMANUALS.org

CHART 16	The child lock does not work

Switch on the ignition.
Check that the relay on the fuse box attached to the side of the passenger compartment relay and fuse box is closed
when the childproof locks are not engaged.
And open when the childproof locks are engaged.
Is the relay working correctly?

YES

Check that there is an earth connection to the relay and that it goes to the electric window switches.
Important, the output cable of the relay goes to the relay and fuse box, **track CGB4 A2**, crosses it (via a diode) and back out **track CGB4 A4** to go to the switches (if the circuit is not continuous when tested for continuity, first try reversing the two probes on the multimeter).

NO

Check the operation of the switch (when the switch is pressed, a circuit connected to earth will open).
Check the wiring between the **track** of the relay coil and the switch.
Check the relay feed and the relay.

GETtheMANUALS.org

PRO 1	Procedure for initializing the anti-pinch electric windows or sunroof

Anti-pinch electric windows

Switch on the ignition.
Close the window up to the upper stop. Keep the **close** control pressed for more than **three seconds**.
The electric window cannot go any further, it learns the upper stop and is initialized.

Anti-pinch sunroof

Switch on the ignition.
Turn the sunroof control to the left as far as it will go.
Keep the control pressed for about **four seconds**.
The sunroof will open up halfway, come back down a short way, then return to its maximum open position.
Release the switch.
Press again within five seconds and keep the control pressed until the sunroof opens fully then closes again.
If the switch is released during this phase, the procedure must be repeated.

GETtheMANUALS.org

VEL SATIS

8 Electrical equipment

87F PARKING DISTANCE CONTROL

Vdiag No: 04-08

Fault finding - Introduction	87F - 2
Fault finding - System operation	87F - 7
Fault finding - Allocation of computer tracks	87F - 8
Fault finding - Replacement of components	87F - 10
Fault finding - Configurations and programming	87F - 11
Fault finding - Fault summary table	87F - 12
Fault finding - Interpretation of faults	87F - 13
Fault finding - Conformity check	87F - 28
Fault finding - Status summary table	87F - 30
Fault finding - Interpretation of statuses	87F - 31
Fault finding - Parameter summary table	87F - 39
Fault finding - Interpretation of parameters	87F - 40
Fault finding - Customer complaints	87F - 42
Fault finding - Fault Finding Chart	87F - 43

V3 **Edition Anglaise**

"The repair procedures given by the manufacturer in this document are based on the technical specifications current when it was prepared.

The procedures may be modified as a result of changes introduced by the manufacturer in the production of the various component units and accessories from which his vehicles are constructed."

All rights reserved by Renault s.a.s.

Copying or translating, in part or in full, of this document or use of the service part reference numbering system is forbidden without the prior written authority of Renault s.a.s.

© Renault s.a.s.

GETtheMANUALS.org

1. SCOPE OF THIS DOCUMENT

This document presents the fault finding procedure applicable to all computers with the following specifications:

Vehicle(s):	**CLIO III, Laguna II ph 1 and 2** **Vel-Satis ph1 and 2,** **Espace IV ph1 and 2,** **Mégane II, Scénic II, Modus ph2**

Computer name: **Parking distance control**
Vdiag No: 04-08

2. PREREQUISITES FOR FAULT FINDING

Documentation type

Fault finding procedures (this manual):
– Assisted fault finding (integrated into the **diagnostic tool**), Dialogys.
Wiring Diagrams:
– Visu-Schéma (CD-ROM), paper.

Type of diagnostic tools

– CLIP + multiplex line sensor

Special tooling required

Special tooling required	
	Multimeter
Elé. 1681	Universal bornier

3. RECAP

To run fault finding on the vehicle computers, switch on the ignition.

Depending on the type of vehicle equipment, proceed as follows:

For vehicles with radio frequency remote control/key, switch on the ignition with the key.
For vehicles with a Renault card, with the vehicle card in the card reader, press and hold start button (longer than **5 seconds**) with start-up conditions not fulfilled, connect the diagnostic tool and perform the required operations.

To cut off the + after ignition feed, proceed as follows:

For vehicles with key/radiofrequency remote control, use the key to switch off the ignition.
For vehicles with a Renault card, press the Start button twice briefly (less than **3 seconds**), ensure that the + after ignition feed has been cut off by checking that the computer indicator lights on the instrument panel have gone out.

GETtheMANUALS.org

Faults

Faults are declared as either present or stored (depending on whether they appeared in a certain context and have disappeared since, or whether they remain present but have not been diagnosed within the current context).

The **present** or **stored** status of faults should be taken into consideration when the **diagnostic tool** is used following the + after ignition supply being switched on (without operating the system components).

For a **present fault**, apply the procedure described in the **Interpretation of faults** section.

For a **stored fault**, note the faults displayed and apply the instructions in the **Notes** section.

If the fault is **confirmed** when the instructions in the Notes section are applied, the fault is present. Deal with the fault

If the fault is **not confirmed**, check:
- the electrical lines which correspond to the fault,
- the connectors for these lines (for oxidation, bent pins, etc.),
- the resistance of the component detected as faulty,
- the condition of the wires (melted or split insulation, wear).

Conformity check

The aim of the conformity check is to check data that does not produce a fault on the **diagnostic tool** because the data is inconsistent. Therefore, this stage is used to:
- carry out fault finding on faults that do not have a fault display, and which may correspond to a customer complaint.
- check that the system is operating correctly and that there is no risk of a fault recurring after repairs.

This section gives the fault finding procedures for statuses and parameters and the conditions for checking them.

If a status is not behaving normally or a parameter is outside the permitted tolerance values, consult the corresponding fault finding page.

Customer complaints - Fault finding chart

If the test with the diagnostic tool is OK but the customer complaint is still present, the fault should be processed by **customer complaint**.

A synopsis of the general procedure to follow is provided on the following page in the form of a flow chart.

GETtheMANUALS.org

4. FAULT FINDING PROCEDURE

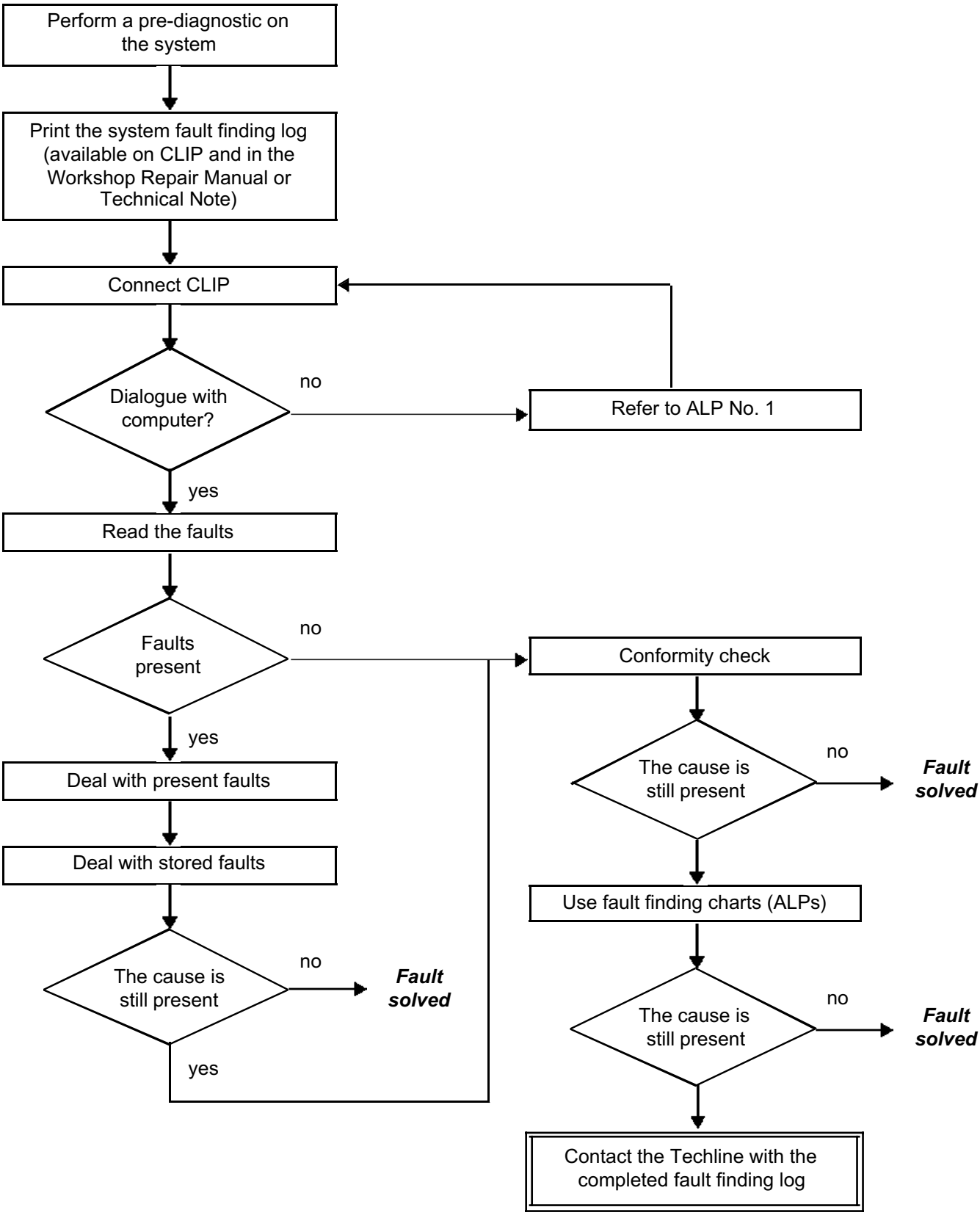

GETtheMANUALS.org

4. FAULT FINDING PROCEDURE (continued)

Wiring check

Fault finding problems
Disconnecting the connectors and/or manipulating the wiring harness may temporarily remove the cause of a fault.
Electrical measurements of voltage, resistance and insulation are generally correct, especially if the fault is not present when the analysis is made (stored fault).

Visual inspection
Look for damage under the bonnet and in the passenger compartment.
Carefully check the fuses, insulators and wiring harness routing.
Look for signs of oxidation.

Tactile inspection
While manipulating the wiring harness, use the **diagnostic tool** to note any change in fault status from stored to present.
Make sure that the connectors are properly locked.
Apply light pressure to the connectors.
Twist the wiring harness.
If there is a change in status, try to locate the source of the fault.

Inspection of each component
Disconnect the connectors and check the appearance of the clips and tabs, as well as the crimping (no crimping on the insulating section).
Make sure that the clips and tabs are properly locked in the sockets.
Check that no clips or tabs have been dislodged during connection.
Check the clip contact pressure using an appropriate model of tab.

Resistance check
Check the continuity of entire lines, then section by section.
Look for a short circuit to earth, to **+ 12 V** or to another wire.

If a fault is detected, repair or replace the wiring harness.

GETtheMANUALS.org

5. FAULT FINDING LOG

IMPORTANT

IMPORTANT
Any fault on a complex system requires thorough fault finding with the appropriate tools. The FAULT FINDING LOG, which should be completed during the procedure, enables you to keep track of the procedure which is carried out. It is an essential document when consulting the manufacturer.

IT IS THEREFORE ESSENTIAL THAT THE FAULT FINDING LOG IS FILLED OUT EVERY TIME IT IS REQUESTED BY TECHLINE OR THE WARRANT RETURNS DEPARTMENT.

You will always be asked for this log:

- when requesting technical assistance from Techline,
- for approval requests when replacing parts for which approval is mandatory,
- to be attached to monitored parts for which reimbursement is requested. The log is needed for warranty reimbursement, and enables better analysis of the parts removed.

6. SAFETY ADVICE

Safety rules must be observed during any work on a component to prevent any damage or injury:

– check the battery voltage to avoid incorrect operation of computer functions,
– use the appropriate tools,
– do not touch the xenon bulbs, and do not work on the COSLAD system when it is in operation, as the voltage can be above 20,000 V.

GETtheMANUALS.org

Description of operation

The system consists of four sensors built into the rear bumper, a computer and a buzzer.
The system assists the driver during parking manoeuvres by warning of any obstacles to the rear of the vehicle.
– The sensors and the computer calculate the distance between the vehicle and any obstacles. The sensors operate over a distance range from **20 - 30 cm minimum to 150 cm maximum**.
– The driver is informed of the distances by a **buzzer**.
– The system only works when the vehicle **is in reverse gear**. Activation is indicated by a **brief 0.5 second activation sound**.

The buzzer is activated when the vehicle is **150 cm** from the obstacle. As the distance diminishes, the frequency of the buzzer increases. When the distance reaches **20 - 30 cm**, the buzzer becomes continuous.
– The system can only be **activated** in **+ after ignition feed**.

DEACTIVATING THE SYSTEM:

– The parking distance control can be deactivated in two ways:
– **Temporary deactivation:** briefly **pressing** (**1 second**) the parking distance control switch on the dashboard deactivates the system (the red warning light on the switch comes on). The function can be switched on again by pressing **briefly** for a second time (the red indicator light on the switch goes out) or by switching the ignition off and back on.
– **Permanent deactivation:** the parking distance control system can be deactivated **for a longer period** by **pressing and holding** (for approximately **3 seconds**) the parking distance control switch on the dashboard (the red warning light on the switch comes on). The function can be switched on again only by **pressing and holding** the switch again (the red warning light on the switch goes out).

Note:
Using the **diagnostic tool** statuses, it is possible to find out the function status (ready, detecting, suspended or disabled) by using status **ET003 Parking distance control function** (see **conformity check** or **the relevant status interpretation**).

Fault finding:
A low pitched, 5-second continuous warning sound upon switching on the ignition informs the driver that a system fault has occurred.

GETtheMANUALS.org

Computer with 1 connector (Clio III, Laguna II ph1 and 2, Vel Satis ph1 and 2 Espace IV ph 1 and 2 Mégane II, Scénic II, Modus ph2):

Track	Description
1	+ 12 V after ignition feed
2	+ 12 V buzzer
3	Computer earth
4	Reverse gear signal (+ 12 V)
5	Warning light control
6	Buzzer earth
7	Not used
8	Diagnostic line K
9	+ 12 V rear sensors
10	Rear sensors earth
11	Not used
12	Parking distance control On/Off switch signal
13	Right-hand inner sensor signal
14	Left-hand inner sensor signal
15	Left-hand outer sensor signal
16	Right-hand outer sensor signal

Note:
For Scénic II, the computer and buzzer are located on the left-hand side of the luggage compartment behind the interior trim.

GETtheMANUALS.org

Computer with 2 connectors (Laguna II ph1, Vel Satis ph1, Espace IV ph1):

12-TRACK CONNECTOR

Track	Description
1	Not used
2	Right-hand inner sensor signal
3	Left-hand inner sensor signal
4	Right-hand outer sensor signal
5	Left-hand outer sensor signal
6	Not used
7	Not used
8	Rear sensors earth
9	Not used
10	Not used
11	+ 12 V rear sensors
12	Not used

16-TRACK CONNECTOR

Track	Description
1	+ 12 V after ignition
2	Buzzer earth
3	Not used
4	Parking distance control On/Off switch signal
5	Not used
6	Reverse gear signal (+ 12 V)
7	Not used
8	Computer earth
9	Not used
10	+ 12 V buzzer
11	Not used
12	Diagnostic line K
13	Warning light control
14	Not used
15	Not used
16	Not used

GETtheMANUALS.org

REPLACING THE PARKING DISTANCE CONTROL COMPUTER

BEFORE REPLACING ANY COMPUTER IT IS ESSENTIAL THAT YOU CONTACT TECHLINE.

When replacing the computer, apply the following procedure:
– switch off the ignition,
– replace the parking distance control computer (see **MR 392, 385, 405, 395, 364, 370 or 470 mechanical systems 87F parking distance control, parking distance control computer: Removal - Refitting**),
– configure the vehicle identification using command **CF005 Vehicle identification** (refer to **Configurations and Programming**),
– configure the volume of the buzzer and adjust the pitch using commands **CF001 Buzzer volume** and **CF006 Adjusting the pitch** (refer to **Configurations and Programming**),
– enter the VIN using command **VP001 Enter VIN**,
– check that the system is operating correctly and make sure that there are no faults.

GETtheMANUALS.org

CONFIGURATION AFTER REPLACING THE COMPUTER

After replacing the computer, configure the parking distance control computer with the vehicle type using configuration **CF005 Vehicle identification** (repair mode menu, diagnostic tool configuration function). The configuration adapts the sensors' detection field to the type of body.
Depending on a vehicle's gearbox type (automatic or manual), the parking distance control can be delayed from working. Activation of the parking distance control is indicated by a **brief 0.5 second activation sound** (vehicle in reverse gear). On vehicles with an automatic transmission, the **3-second** delay prevents the activation noise from sounding every time the driver shifts from Park to Drive.

After having configured the computer, check that the configuration has taken effect by reading the configuration **LC005 Vehicle identification**.

Special note (Vdiag 08 only):
If a vehicle is fitted with a caravan towbar and if there is a continuous beeping noise, take the towbar out of the detection field for the rear sensors, run the command for parameter **VP003 Caravan towbar distance**, then increase the detection area centimetre by centimetre. To avoid impairing the detection, the parameter **PR026 Caravan towbar distance** must not exceed **40 cm**.

SETTING OPTIONS

The volume and the tone of the buzzer can be changed if the customer desires.
Configuration **CF001 Buzzer volume** is used to adjust the **volume** of the buzzer.

Configuration function **CF006 Pitch adjustment** is used to adjust the **pitch** of the buzzer.

After configuring the computer, check that the configurations have been registered correctly using configuration readings **LC001 Buzzer volume** and **LC006 Tone adjustment**.

GETtheMANUALS.org

Summary of sensors and actuators on which fault finding can be performed by the parking distance control computer (with corresponding Design Office codes)

Tool fault	Associated DTC	Diagnostic tool title
DF002	**9001**	Left-hand outer sensor
DF003	**9002**	Left-hand inner sensor
DF004	**9004**	Right-hand outer sensor
DF005	**9003**	Right-hand inner sensor
DF006	**9006**	Buzzer
DF007	**9007**	Sensor feed voltage
DF008	**9005**	Computer fault
DF012	**9009**	Parking distance control switch indicator light

GETtheMANUALS.org

DF002 PRESENT OR STORED	LEFT-HAND OUTER SENSOR CC.1 : Short circuit to + 12 V CO.0 : Open circuit or short circuit to earth 1.DEF: Internal electronic fault

NOTES	**Conditions for applying the fault finding procedure to stored faults:** The fault is declared present following selection of reverse gear if the parking distance control function is **ACTIVE (READY)**: the parking distance control warning light is not lit, see the interpretation of status **ET003 Parking distance control function**.
	Special notes: This fault is indicated by the buzzer (a **5 second** warning sound) and the system shuts down.

If a combination of faults are present on the sensors:
Check the connection and condition of the intermediate connectors (the sensors up to the computer). Repair if necessary.
Check for **+ 12 V**, after ignition, between **tracks 1 and 3** of all the sensors.
Computer with 1 connector:
Check the **insulation, continuity and the absence of interference resistance** of the supply for each sensor (between **Tracks 1 and 3**) and for the computer (between **tracks 9 and 10**).
Computer with 2 connectors:
Check the **insulation, continuity and absence of interference resistance** of the supply between **tracks 1 and 3** for each sensor and between **tracks 8 and 11** of the computer **12-track** connector.

In the case where only one sensor is faulty:
Swap the defective sensor with a non-defective sensor.
Check for faults:

If the sensor is no longer faulty, replace the defective sensor.

If the fault is still present, **with the ignition off,** disconnect the parking distance control computer connector to check **the insulation, continuity and the absence of interference resistance** on the following connections:
1 connector:

Parking distance control computer	→	Left-hand outer sensor
Track 9	→	**Track 1**
Track 15	→	**Track 2**
Track 10	→	**Track 3**

Repair if necessary (see **Technical Note 6015A, Repairing electrical wiring, Wiring: Precautions for repair**), repair the wiring, otherwise replace the wiring.

AFTER REPAIR	Clear the stored faults. Follow the instructions to confirm repair. Deal with any faults.

GETtheMANUALS.org

DF002 (CONTINUED)	

2 connectors:

12-track parking distance control computer connector		Left-hand outer sensor
Track 11	→	**Track 1**
Track 5	→	**Track 2**
Track 8	→	**Track 3**

Repair if necessary (see **Technical Note 6015A, Repairing electrical wiring, Wiring: Precautions for repair**), repair the wiring, otherwise replace the wiring.

If the fault is still present, contact the Techline.

AFTER REPAIR	Clear the stored faults. Follow the instructions to confirm repair. Deal with any faults.

GETtheMANUALS.org

DF003 PRESENT OR STORED	LEFT-HAND INNER SENSOR CC.1 : Short circuit to + 12 V CO.0 : Open circuit or short circuit to earth 1.DEF: Internal electronic fault

NOTES	**Conditions for applying the fault finding procedure to stored faults:** The fault is declared present following selection of reverse gear if the parking distance control function is **ACTIVE (READY)**: the parking distance control warning light is not lit, see the interpretation of status **ET003 Parking distance control function**.
	Special notes: This fault is indicated by the buzzer (a **5 second** warning sound) and the system shuts down.

When dealing with a combination of faults on the sensors:
Check the connection and the status of the intermediate connectors (the sensors up to the computer). Repair if necessary.
Check for **+ 12 V**, after ignition, between **Tracks 1 and 3** of all the sensors.
Computer with 1 connector:
Check the **insulation, continuity and the absence of interference resistance** of the supply for each sensor (between **Tracks 1 and 3**) and for the computer (between **tracks 9 and 10**).
Computer with 2 connectors:
Check the **insulation, continuity and absence of interference resistance** of the supply between **tracks 1 and 3** for each sensor and between **tracks 8 and 11** of the computer **12-track** connector.

In the case where only one sensor is faulty:
Swap the defective sensor with a non-defective sensor.
Check for faults:

If the sensor is no longer faulty, replace the defective sensor.

If the fault is still present, **with the ignition off**, disconnect the parking distance control computer connector to check **the insulation, continuity and the absence of interference resistance** on the following connections:
1 connector:

Parking distance control computer		Left-hand inner sensor
Track 9	→	**Track 1**
Track 14	→	**Track 2**
Track 10	→	**Track 3**

Repair if necessary (see **Technical Note 6015A, Repairing electrical wiring, Wiring: Precautions for repair**), repair the wiring, otherwise replace the wiring.

AFTER REPAIR	Clear the stored faults. Follow the instructions to confirm repair. Deal with any faults.

GETtheMANUALS.org

DF003 (CONTINUED)	

2 connectors:

12-track parking distance control computer connector		Left-hand inner sensor
Track 11	→	**Track 1**
Track 3	→	**Track 2**
Track 8	→	**Track 3**

Repair if necessary (see **Technical Note 6015A, Repairing electrical wiring, Wiring: Precautions for repair**), repair the wiring, otherwise replace the wiring.

If the fault is still present, contact the Techline.

AFTER REPAIR	Clear the stored faults. Follow the instructions to confirm repair. Deal with any faults.

GETtheMANUALS.org

DF004 PRESENT OR STORED	RIGHT-HAND OUTER SENSOR CC.1 : Short circuit to + 12 V CO.0 : Open circuit or short circuit to earth 1.DEF: Internal electronic fault

NOTES	**Conditions for applying the fault finding procedure to stored faults:** The fault is declared present following selection of reverse gear if the parking distance control function is **ACTIVE (ready)**: the parking distance control warning light is not lit, see the interpretation of status **ET003 Parking distance control function**.
	Special notes: This fault is indicated by the buzzer (a **5 second** warning sound) and the system shuts down.

When dealing with a combination of faults on the sensors:
Check the connection and the status of the intermediate connectors (the sensors up to the computer). Repair if necessary.
Check for **+ 12 V**, after ignition, between **tracks 1 and 3** of all the sensors.
Computer with 1 connector:
Check the **insulation, continuity and the absence of interference resistance** of the supply for each sensor (between **tracks 1 and 3**) and for the computer (between **tracks 9 and 10**).
Computer with 2 connectors:
Check the **insulation, continuity and absence of interference resistance** of the supply between **tracks 1 and 3** for each sensor and between **tracks 8 and 11** of the computer **12-track** connector.

In the case where only one sensor is faulty:
Swap the defective sensor with a non-defective sensor.
Check for faults:

If the sensor is no longer faulty, replace the defective sensor.

If the fault is still present, **with the ignition off,** disconnect the parking distance control computer connector to check **the insulation, continuity and the absence of interference resistance** on the following connections**:**
1 connector:

Parking distance control computer		Right-hand outer sensor
Track 9	→	**Track 1**
Track 16	→	**Track 2**
Track 10	→	**Track 3**

Repair if necessary (see **Technical Note 6015A, Repairing electrical wiring, Wiring: Precautions for repair**), repair the wiring, otherwise replace the wiring.

AFTER REPAIR	Clear the stored faults. Follow the instructions to confirm repair. Deal with any faults.

GETtheMANUALS.org

DF004 (CONTINUED)	

2 connectors:

12-track parking distance control computer connector		Right-hand outer sensor
Track 11	→	**Track 1**
Track 4	→	**Track 2**
Track 8	→	**Track 3**

Repair if necessary (see **Technical Note 6015A, Repairing electrical wiring, Wiring: Precautions for repair**), repair the wiring, otherwise replace the wiring.

If the fault is still present, contact the Techline.

AFTER REPAIR	Clear the stored faults. Follow the instructions to confirm repair. Deal with any faults.

GETtheMANUALS.org

DF005 PRESENT OR STORED	RIGHT-HAND INNER SENSOR CC.1 : Short circuit to + 12 V CO.0 : Open circuit or short circuit to earth 1.DEF: Internal electronic fault

NOTES	**Conditions for applying the fault finding procedure to stored faults:** The fault is declared present following selection of reverse gear if the parking distance control function is **ACTIVE (READY)**: the parking distance control warning light is not lit, see the interpretation of status **ET003 Parking distance control function**.
	Special notes: This fault is indicated by the buzzer (a **5 second** warning sound) and the system shuts down.

If a combination of faults are present on the sensors:
Check the connection and condition of the intermediate connectors (the sensors up to the computer). Repair if necessary.
Check for **+ 12 V**, after ignition, between **tracks 1 and 3** of all the sensors.
Computer with 1 connector:
Check the **insulation, continuity and the absence of interference resistance** of the supply for each sensor (between **tracks 1 and 3**) and for the computer (between **tracks 9 and 10).**
Computer with 2 connectors:
Check the **insulation, continuity and absence of interference resistance** of the supply between **tracks 1 and 3** for each sensor and between **tracks 8 and 11** of the computer **12-track** connector.

In the case where only one sensor is faulty:
Swap the defective sensor with a non-defective sensor.
Check for faults:

If the sensor is no longer faulty, replace the defective sensor.

If the fault is still present, **with the ignition off,** disconnect the parking distance control computer connector to check **the insulation, continuity and the absence of interference resistance** on the following connections:
1 connector:

Parking distance control computer		Right-hand inner sensor
Track 9	→	**Track 1**
Track 13	→	**Track 2**
Track 10	→	**Track 3**

Repair if necessary (see **Technical Note 6015A, Repairing electrical wiring, Wiring: Precautions for repair**), repair the wiring, otherwise replace the wiring.

AFTER REPAIR	Clear the stored faults. Follow the instructions to confirm repair. Deal with any faults.

GETtheMANUALS.org

DF005 (CONTINUED)	

2 connectors:

12-track parking distance control computer connector		Right-hand inner sensor
Track 11	→	**Track 1**
Track 2	→	**Track 2**
Track 8	→	**Track 3**

Repair if necessary (see **Technical Note 6015A, Repairing electrical wiring, Wiring: Precautions for repair**), repair the wiring, otherwise replace the wiring.

If the fault is still present, contact the Techline.

AFTER REPAIR	Clear the stored faults. Follow the instructions to confirm repair. Deal with any faults.

GETtheMANUALS.org

DF006 PRESENT OR STORED	BUZZER CC.1 : Short circuit to + 12 V CO.0 : Open circuit or short circuit to earth

NOTES	**Conditions for applying the fault finding procedure to stored faults:** The fault is declared present following selection of reverse gear if the parking distance control function is **ACTIVE (READY)**: the parking distance control warning light is not lit, see the interpretation of status **ET003 Parking distance control function**.
	Special notes: The fault is indicated by the absence of the **1-second** beep normally emitted by the buzzer when reverse gear is selected.

Computer with 1 connector:
Switch off the ignition and disconnect the computer's **16-track connector**.
Measure the internal resistance of the computer between **tracks 2** and **6**.
If the value measured is not **314 Ω** or if there is a short circuit across the specified **tracks**, contact your Techline.
Computer with 2 connectors:
Switch off the ignition and disconnect the computer's **16-track connector**.
Measure the internal resistance of the computer between tracks **2 and 10**.
If the value measured is not **314 Ω** or if there is a short circuit across the specified **tracks**, contact your Techline.

Check **the connection and condition of the connector** on the buzzer.
Replace the connector if necessary.

Switch off the ignition, and disconnect the parking distance control computer **16-track** connector to check the **insulation and continuity and ensure the absence of interference resistance** on the following connections:
1 connector:

Parking distance control computer		Buzzer
Track 2	→	**Track 2**
Track 6	→	**Track 1**

Repair if necessary (see **Technical Note 6015A, Repairing electrical wiring, Wiring: Precautions for repair**), repair the wiring, otherwise replace the wiring.

AFTER REPAIR	Clear the stored faults. Follow the instructions to confirm repair. Deal with any faults.

GETtheMANUALS.org

DF006 (CONTINUED)	

2 connectors:

16-track parking distance control computer connector		Buzzer
Track 10	→	**Track 2**
Track 2	→	**Track 1**

Repair if necessary (see **Technical Note 6015A, Repairing electrical wiring, Wiring: Precautions for repair**), repair the wiring, otherwise replace the wiring.

Measure the buzzer resistance between **tracks 1 and 2**.
Replace the buzzer if its resistance is not approximately **48 Ω**.

If the fault is still present, replace the buzzer.

AFTER REPAIR	Clear the stored faults. Follow the instructions to confirm repair. Deal with any faults.

GETtheMANUALS.org

DF007 PRESENT OR STORED	SENSOR SUPPLY VOLTAGE CO.0 : Open circuit

NOTES	**Conditions for applying the fault finding procedure to stored faults:** The fault reappears present or stored after its has been cleared, the ignition is switched on and off again and reverse gear is selected.
	Special notes: The sensors are directly supplied with **+ 12 V** by the computer.

Computer with 1 connector:
With the parking distance control computer **16-track** connector **connected** and with the **ignition on**, measure the sensor **power supply** coming from the computer. The voltage should be equal to the battery voltage (**± 0.5 V**) when measured across **track 9** (**+ 12 V**) and **track 10** (earth).
If there is not a **+ 12 V** power supply between the **tracks** specified above, remove the rear bumper to access the sensors.
Computer with 2 connectors:
With the parking distance control computer **12-track** connector **connected** and with the **ignition on**, measure the sensor **power supply** from the computer outlet. The voltage should be equal to the battery voltage (± **0.5** V) when measured across **track 11** (+ **12** V) and **track 8** (earth).
If there is not a **+ 12 V** power supply between the **tracks** specified above, remove the rear bumper to access the sensors.
Switch off the ignition, and disconnect the parking distance control computer connector to check the **insulation and continuity and the absence of interference resistance** on the following connections:
1 connector:

Parking proximity sensor computer connector		Sensors
Track 9	→	**Track 1 of the four sensors**
Track 10	→	**Track 3 of the four sensors**

Repair if necessary (see **Technical Note 6015A, Repairing electrical wiring, Wiring: Precautions for repair**), repair the wiring, otherwise replace the wiring.

AFTER REPAIR	Clear the stored faults. Follow the instructions to confirm repair. Deal with any faults.

GETtheMANUALS.org

DF007 (CONTINUED)	

2 connectors:

12-track parking distance control computer connector		Right-hand inner sensor
Track 11	→	**Track 1**
Track 8	→	**Track 3**

Repair if necessary (see **Technical Note 6015A, Repairing electrical wiring, Wiring: Precautions for repair**), repair the wiring, otherwise replace the wiring.

If the sensor power supply is correct (no short circuit), reconnect the computer connector and four sensor connectors.
Turn on the ignition and disconnect the sensors, one at a time, to see if any of the sensors causes the power supply to drop. Replace the defective sensor.

If the fault is still present, contact the Techline.

AFTER REPAIR	Clear the stored faults. Follow the instructions to confirm repair. Deal with any faults.

GETtheMANUALS.org

DF008 PRESENT OR STORED	COMPUTER FAULT 1.DEF: Internal electronic fault 2.DEF: Internal electronic fault 3.DEF: Internal electronic fault 4.DEF: Internal electronic fault

NOTES	**Conditions for applying the fault finding procedure to stored faults:** The fault reappears present or stored after its has been cleared, the ignition is switched on and off again and reverse gear is selected.
	Special notes: If the fault is present and is represented by **1.DEF** or **2.DEF**, the system operates in defect mode (substitute values are used). If the fault is present and characterised **3.DEF** and the buzzer fails to sound when shifting into reverse, contact your Techline.

1.DEF ***2.DEF***	***NOTES***	None

After following the instructions, if the fault recurs, switch off the ignition and disconnect the parking distance control computer supply fuse (see vehicle diagram).
Reconnect the fuse, switch the ignition back on, and perform a fault reading.

If the fault recurs, check **the connections and condition** of the parking distance control computer **16-track** connector (no damage to the connections).
Repair if necessary.

With the ignition switched off, disconnect the parking distance control computer **16-track** connector to check the **conformity of the supplies** and to check the **insulation, continuity and the absence of interference resistance** on the following connections:

16-track parking distance control computer connector with 1 connector:

Track 1 ⟶ + after ignition feed

Track 3 ⟶ earth

AFTER REPAIR	Clear the stored faults. Follow the instructions to confirm repair. Deal with any faults.

GETtheMANUALS.org

DF008 (CONTINUED)	

16-**track** parking distance control computer with 2 connectors:

Track 1 → + after ignition feed

Track 8 → earth

Repair if necessary (refer to vehicle wiring diagrams).

If the fault is still present, contact the Techline.

3.DEF	*NOTES*	None

Contact the Techline.

4.DEF	*NOTES*	**Only for Vdiag 08**

Contact the Techline.

AFTER REPAIR	Clear the stored faults. Follow the instructions to confirm repair. Deal with any faults.

GETtheMANUALS.org

DF012 PRESENT OR STORED	PARKING DISTANCE CONTROL SWITCH INDICATOR LIGHT CC.0 : short circuit to earth or open circuit CO.1 : open circuit or short circuit to + 12 volts

NOTES	**Conditions for applying the fault finding procedure to stored faults:** A fault is declared present after reverse gear is engaged and the parking distance control deactivation switch is pressed.

Remove the parking distance control switch and check the connections and condition of its connector.
Repair if necessary.

Check for an earth on **track B3** of the parking distance control switch connector.
Repair if necessary.

Switch off the ignition, and disconnect the parking distance control computer **16-track** connector to check the **insulation and continuity and the absence of interference resistance** on the following connection:
Laguna II ph2, Espace IV ph2, Vel-Satis ph2, Mégane II, Scénic II, Laguna II ph1 (1 connector), Espace IV ph1 (1 connector), Vel-Satis ph1 (1 connector), Laguna II ph1 (2 connectors), Vel-Satis ph1 (2 connectors), Clio III, Modus ph2:

Parking distance control switch connector		Parking proximity sensor computer connector
Track B2	→	**Track 5**

Repair if necessary.

Espace IV ph1 (2 connectors):

Parking distance control switch connector		**16-track** parking distance control computer connector
Track B2	→	**Track 13**

Repair if necessary.

If the fault is still present, replace the parking distance control switch.

AFTER REPAIR	Clear the stored faults. Follow the instructions to confirm repair. Deal with any faults.

GETtheMANUALS.org

NOTES	Only perform this conformity check after a thorough check with the **diagnostic tool**. **Conditions for applying the fault finding procedure:** ignition on.

Order	Function	Parameter or Status checked or Action		Display and Notes	Fault finding
1	Parking distance control system status	**ET003:**	Parking distance control function	**READY** (system operating and ready to detect)	For further information or, if there is a fault, consult the interpretation of status **ET003**.
				DETECTING (if the system is detecting)	
				SUSPENDED (if the system is temporarily switched off)	
				OFF (if the system is completely switched off)	
2	Parking distance control deactivation switch.	**ET004:**	Parking distance control switch	**PRESS DETECTED** when the switch is pressed, **RELEASED** when released.	In the event of a fault, consult the interpretation of status **ET004**.
3	Feeds	**PR006:**	Sensor feed voltage	**10.5 V < X < 14.4 V**	In the event of a fault, apply the fault finding procedure for **DF007 Sensor supply voltage**.
		PR020:	Computer feed voltage	**10.5 V < X < 14.4 V**	If there is a fault with this parameter, check the **insulation, continuity and the absence of interference resistance** on the computer power feed and earth (see wiring diagram). If the fault is still present, carry out **fault finding on the charging circuit**.
4	Reverse gear selection	**ET001:**	Reverse gear engaged	**YES** or **NO**	If there is a fault, refer to the interpretation of status **ET001**.

GETtheMANUALS.org

NOTES	Only perform this conformity check after a thorough check with the **diagnostic tool**. **Conditions for applying the fault finding procedure:** ignition on.

Order	Function	Parameter or Status checked or Action	Display and Notes	Fault finding
5	Buzzer control	**ET002:** Buzzer control	**ACTIVE** when the buzzer sounds. **INACTIVE** if not.	In the event of a fault, consult the interpretation of status **ET002**.
6	Proximity sensors	**PR001:** Left-hand outer sensor distance	**20 cm < X < 150 cm** depending on the distance from the obstacle (“out of range” value: **255 cm**).	In the event of a fault, refer to the interpretation of the parameter **PR001**.
		PR002: Left-hand inner sensor distance	**20 cm < X < 150 cm** depending on the distance from the obstacle (“out of range” value: **255 cm**).	If there is a fault, refer to the interpretation of parameter **PR002**.
		PR003: Right-hand outer sensor distance	**20 cm < X < 150 cm** depending on the distance from the obstacle (“out of range” value: **255 cm**).	In the event of a fault, consult the interpretation of parameter **PR003**.
		PR004: Right-hand inner sensor distance	**20 cm < X < 150 cm** depending on the distance from the obstacle (“out of range” value: **255 cm**).	If there is a fault, refer to the interpretation of parameter **PR004**.
		PR005: Shortest distance calculated	**20 cm < X < 150 cm** depending on the distance from the obstacle (“out of range” value: **255 cm**).	If there is a fault, refer to the interpretation of parameter **PR005**.
7	**Vdiag 08 only:** Caravan attachment detection zone	**PR026**: Distance from the caravan attachment	**By default: 35 cm** Beyond **40 cm**, the function is less effective, (setting the detection area of the rear centre sensors so that the presence of a caravan towbar is not detected)	If the caravan attachment is detected, increase the non-detection value using parameter **VP003**.
		VP003: Distance from the caravan attachment	Enables the non-detection area for the caravan attachment to be modified.	

GETtheMANUALS.org

Tool status	Diagnostic tool title
ET001	Reverse gear engaged
ET002	Buzzer control
ET003	Parking distance control function
ET004	Parking distance control switch

GETtheMANUALS.org

ET001	REVERSE GEAR ENGAGED

NOTES	**Special note:** Only carry out the checks if the YES and NO statuses are not consistent with the position of the gear lever.

1 connector:

Check that the reversing lights are working correctly: they should come on when reverse gear is selected and go out when it is not.

If the reversing lights fail to function as specified:
With the ignition switched off, disconnect the parking distance control computer connector to check the **insulation** (against **+ 12 V**), **and the continuity and absence of interference resistance** on the following connection:
Laguna II ph1 ph2, Espace IV ph1 ph2, Vel-Satis ph2, Clio III, Modus ph2:

Parking distance control computer connector		Rear lights connector
Track 4	→	**Track 3**

Repair if necessary (see **Technical Note 6015A, Repairing electrical wiring, Wiring: Precautions for repair**), repair the wiring, otherwise replace the wiring.

Vel-Satis ph1, Scénic II:

Parking distance control computer connector		Rear left hand lights connector
Track 4	→	**Track 2**

Repair if necessary (see **Technical Note 6015A, Repairing electrical wiring, Wiring: Precautions for repair**), repair the wiring, otherwise replace the wiring.

AFTER REPAIR	Repeat the conformity check from the start.

GETtheMANUALS.org

ET001 (CONTINUED 1)	

Mégane II:
Only for 3 and 5-door hatches:

Parking distance control computer connector (white) — Left-hand rear light connector

Track 4 → **Track 5**

Parking distance control computer connector (white) — Right-hand rear light connector

Track 4 → **Track 1**

Repair if necessary (see **Technical Note 6015A, Repairing electrical wiring, Wiring: Precautions for repair**), repair the wiring, otherwise replace the wiring.

Only for 4-door hatches:

Parking distance control computer connector (white) — Left-hand rear light connector

Track 4 → **Track 5**

Parking distance control computer connector (white) — Right-hand rear light connector

Track 4 → **Track 2**

Repair if necessary (see **Technical Note 6015A, Repairing electrical wiring, Wiring: Precautions for repair**), repair the wiring, otherwise replace the wiring.

Only for cabriolets:

Parking distance control computer connector (white) — Left-hand rear light connector

Track 4 → **Track 6**

Parking distance control computer connector (white) — Right-hand rear light connector

Track 4 → **Track 1**

Repair if necessary (see **Technical Note 6015A, Repairing electrical wiring, Wiring: Precautions for repair**), repair the wiring, otherwise replace the wiring.

AFTER REPAIR	Repeat the conformity check from the start.

GETtheMANUALS.org

ET001 (CONTINUED 2)	

Only for estates:

Parking distance control computer connector (white) — Left-hand rear light connector

Track 4 → **Track 5**

Parking distance control computer connector (white) — Right-hand rear light connector

Track 4 → **Track 5**

Repair if necessary (see **Technical Note 6015A, Repairing electrical wiring, Wiring: Precautions for repair**), repair the wiring, otherwise replace the wiring.

2 connectors:

Laguna II ph1, Espace IV ph1, Vel-Satis ph2, Clio III:

Parking distance control computer connector — Rear light connector

Track 6 → **Track 3**

Repair if necessary (see **Technical Note 6015A, Repairing electrical wiring, Wiring: Precautions for repair**), repair the wiring, otherwise replace the wiring.

Vel Satis ph1:

Parking distance control computer connector — Rear light connector

Track 6 → **Track 2**

Repair if necessary (see **Technical Note 6015A, Repairing electrical wiring, Wiring: Precautions for repair**), repair the wiring, otherwise replace the wiring.

AFTER REPAIR	Repeat the conformity check from the start.

GETtheMANUALS.org

ET002	BUZZER CONTROL

NOTES	There must be no present or stored faults.

ET002 remains OFF	Check that the parking distance control system is switched on using status **ET003 "Parking distance control function"** (parking distance control switch warning light goes out). If the status displays “suspended” or “deactivated”, restart the system by pressing for **1 or 3 seconds**, consult the interpretation of status **ET003 “Parking distance control function”**.
	Check that the parking distance control configuration is correct for the vehicle on which it is fitted (**LC005 Vehicle identification**). If necessary, reconfigure the computer using command **CF005 Vehicle identification**.
	Check, when the vehicle is close to an obstacle (between **20 and 150 cm**), that the distance evaluated corresponds to the distance displayed by the **diagnostic tool** (**PR001** to **PR004**). If the distance reading does not match or the distance parameters stay at **255 cm**, contact your Techline.

ET002 ON but buzzer does not sound	Check that the buzzer volume is not at a zero setting **LC001 Buzzer volume**. If the configured volume is **ZERO or DEACTIVATED**, reconfigure the computer using command **CF001 Buzzer volume**. Select the volume required by the customer.
	Switch off the ignition, and disconnect the parking distance control computer 16-track connector to check the **insulation and continuity and ensure the absence of interference resistance** on the following connections: **Laguna II ph2, Espace IV ph2, Espace IV ph1 (1 connector), Vel-Satis ph2, Vel-Satis ph1 (1 connector), Laguna II ph1 (1 connector),** Parking distance control computer → Buzzer **Track 2** → **Track 1** **Track 6** → **Track 2** Repair if necessary (refer to vehicle wiring diagrams).

AFTER REPAIR	Repeat the conformity check from the start.

GETtheMANUALS.org

ET002 (CONTINUED)	

Mégane II, Scénic II, Clio III, Modus ph2:

Parking distance control computer		Buzzer
Track 2	→	**Track 2**
Track 6	→	**Track 1**

Repair if necessary (refer to vehicle wiring diagrams).

Laguna II ph1 (2 connector), Espace IV ph1 (1 connector), Vel-Satis ph1 (1 connector):

Parking distance control computer		Buzzer
Track 10	→	**Track 2**
Track 2	→	**Track 1**

Repair if necessary (refer to vehicle wiring diagrams).

Measure the resistance between the buzzer's 2 **tracks**.
Replace the buzzer if its resistance is not approximately **48 Ω**.

If the fault is still present, replace the buzzer.

AFTER REPAIR	Repeat the conformity check from the start.

GETtheMANUALS.org

ET003	PARKING DISTANCE CONTROL FUNCTION

NOTES	**Special note**: If the parking distance control system is suspended or deactivated, the parking distance control switch indicator light comes on.

This status indicates whether the parking distance control system is on or off:

ET003: READY → This means that, when reversing, the parking distance control detects obstacles and the buzzer sounds (the parking distance control switch indicator light goes out).

ET003: DETECTING → This information is displayed when in reverse gear and indicates that the parking distance control has detected an obstacle.

ET003: SUSPENDED → This means the parking distance control system is switched off (no detection possible). The suspension is **temporary** because the parking distance control system will come back on after the ignition is switched off and on. To suspend or reactivate the system manually, **briefly press** (**1 second**) the parking distance control switch.

ET003: DEACTIVATED → This means the parking distance control system is switched off (no detection possible). This suspension is **permanent** (switching the + after ignition off and on again will not reactivate the system). To deactivate or reactivate the system manually, **press and hold** (**3 seconds**) the parking distance control switch.

If the status is not as specified, check for an **earth** on **track A2** of the parking distance control switch. Repair if necessary.

With the ignition off, disconnect the parking distance control switch to check the **insulation** (against the earth and **+ 12 V**), **continuity and absence of interference resistance** in the following connection:
Laguna II ph2, Espace IV ph2, Vel-Satis ph2, Mégane II, Scénic II, Espace IV ph1 (1 connector), Vel-Satis ph1 (1 connector), Clio III, Modus ph2:

Parking distance control switch connector **Track B1** → Parking distance control computer connector **Track 12**

Repair if necessary

AFTER REPAIR	Repeat the conformity check from the start.

GETtheMANUALS.org

ET003 **CONTINUED**	

Espace IV ph1 (2 connectors), Vel-Satis ph1 (2 connectors):

Parking distance control switch connector **Track B1** → Parking distance control computer connector **Track 12**

Repair if necessary

If the connection just checked is OK (no open or short circuit), and there is an **earth** on **track A2** of the switch but the fault is still present, check the switch operation with an ohmmeter.
Switch not pressed: **insulation** between **track A2** and **B1**.
Switch pressed: **continuity** between **track A2** and **B1**.
Replace the parking distance control switch if it fails to function as specified.

AFTER REPAIR	Repeat the conformity check from the start.

GETtheMANUALS.org

ET004	PARKING DISTANCE CONTROL SWITCH

NOTES	**Special notes:** Only apply the status interpretation procedure if the parking distance control switch position is not consistent with the information supplied by status (**"Press detected" or "Release"**). There must be no present or stored faults.

With the ignition off, disconnect the parking distance control switch to check the **insulation** (against the earth and **+ 12 V**), **continuity and absence of interference resistance** in the following connection:

Parking distance control switch connector		Parking distance control computer connector
Track B1	→	**track 12**

Repair if necessary.

If the connection just checked is OK (no open or short circuit), and there is an **earth** on **track A2** of the switch but the fault is still present, check the switch operation with an ohmmeter.
Switch not pressed: **insulation** between **track A2** and **B1**.
Switch pressed: **continuity** between **track A2** and **B1**.
Replace the parking distance control switch if it fails to function as specified.

AFTER REPAIR	Repeat the conformity check from the start.

GETtheMANUALS.org

Tool parameter	Diagnostic tool title
PR001	Left-hand outer sensor distance
PR002	Left-hand inner sensor distance
PR003	Right-hand outer sensor distance
PR004	Right-hand inner sensor distance
PR005	Shortest distance calculated
PR006	Sensor feed voltage
PR020	Computer feed voltage
PR026	Distance from caravan attachment **(Vdiag 08 only)**

GETtheMANUALS.org

PR001 **PR002** **PR003** **PR004**	LEFT-HAND OUTER SENSOR DISTANCE LEFT-HAND INNER SENSOR DISTANCE RIGHT-HAND OUTER SENSOR DISTANCE RIGHT-HAND INNER SENSOR DISTANCE

NOTES	**Special notes:** Before searching for a fault with these parameters, make sure no fault is present or stored. If there is a fault, apply the interpretation for the fault detected by the **diagnostic tool**.
	Note: The ultrasonic sensors are very fragile. Therefore, when removing the rear bumper, be careful not to scratch them. An obstacle which is further than **150 cm** away cannot be detected, the parameter value is **255** in this case. For an obstacle which is between **20** and **150 cm** away, the parameter value is the distance to the obstacle. For an obstacle which is closer than **20 cm** away, the value of the parameters is **0**.

Using the **diagnostic tool** configuration reading screen (repair mode menu), check that the parking distance control system is configured correctly for the vehicle type to which it is fitted (**LC005 Vehicle identification**).
If necessary, reconfigure the computer using command **CF005 Vehicle identification**.

Check, when the vehicle is close to an obstacle (between **20 and 150 cm**), that the distance evaluated corresponds to the distance displayed by the **diagnostic tool** (**PR001** to **PR004**).
If the distance is incorrect or if the distance parameters remain at **255**, make sure nothing is interfering with the reading (sticker, mud, snow etc. on the rear bumper).

If the distances displayed by the sensors seem incorrect or if **255** is displayed continuously, check the condition of the sensor(s). There must be no scratches on the detection component (outer metal section) of the sensors.
Replace the defective sensor.

If the fault is still present, apply the fault finding procedure to the sensor whose distance parameter is incorrect (even if the **diagnostic tool** does not report a fault).

AFTER REPAIR	Repeat the conformity check from the start.

GETtheMANUALS.org

PR005	SHORTEST DISTANCE CALCULATED

NOTES	**Special notes:** Before searching for a fault with this parameter, make sure that no fault is present or stored. If there is a fault, apply the interpretation for the fault detected by the **diagnostic tool**.
	Note: The ultrasonic sensors are very fragile. Therefore, when removing the rear bumper, be careful not to scratch them. **This parameter is an average calculated by the computer when an obstacle is placed between two sensors.** When below **30 cm**, the estimated distance is displayed as **0 cm** (critical detection zone with constant warning sound).

Using the diagnostic tool configuration reading screen, check that the parking distance control system is configured correctly for the body on which it is fitted **LC005 Vehicle identification**). If necessary, reconfigure the computer using command **CF005 Vehicle identification**.

With the vehicle close to an obstacle (between **0 and 150** cm), check whether the calculated distance is consistent. If the distance is inconsistent or if the parameter remains at 255, ensure that nothing is interfering with the measurement (sticker, mud or snow, etc. on the rear bumper).

If the distance calculated is still inconsistent or if it is continuously displayed as **255**, check the condition of the sensors; the detection part (metallic outer part) must not have any scratches.
Replace the defective sensor.

If the fault is still present, apply the fault finding procedure to the sensor whose distance parameter is incorrect (even if the **diagnostic tool** does not report a fault).

AFTER REPAIR	Repeat the conformity check from the start.

PARKING DISTANCE CONTROL
Fault finding - Customer complaints

GETtheMANUALS.org

NOTES	**Only consult this customer complaint after a complete check with the diagnostic tool.**

NO DIALOGUE WITH THE COMPUTER	→ **ALP1**
NO BUZZER	→ **ALP2**
WARNING SOUND EMITTED CONTINUOUSLY (NO OBSTACLE DETECTED)	→ **ALP3**

GETtheMANUALS.org

ALP1	No dialogue with the computer

NOTES	None

Try the **diagnostic tool** on another vehicle.

Check:
– The connection between the **diagnostic tool** and the diagnostic socket (lead in good condition).
– The injection, engine and passenger compartment fuses.

Check for the **+ 12 V battery feed** on **track 16**, for a **+ 12 V after ignition feed** on **track 1** and for **earth** on **track 5** and on **track 4** of the diagnostic socket.
Repair if necessary.

1 connector:
Switch off the ignition, and disconnect the parking distance control computer connector to check the **insulation, continuity and absence of interference resistance** on the following connections:

Parking distance control computer connector

Track 1 → **+ Before ignition** (see vehicle diagram)

Track 3 → **Earth**

Track 8 → **track 7** of the diagnostic socket (K line)

Repair if necessary (refer to vehicle wiring diagrams).

2 connectors:
Switch off the ignition, and disconnect the parking distance control computer **16-track** connector to check the **insulation and continuity and ensure the absence of interference resistance** on the following connections:

Parking distance control computer connector

Track 1 → **+ Before ignition** (see vehicle diagram)

Track 8 → **Earth**

Track 12 → **track 7** of the diagnostic socket (K line)

Repair if necessary (refer to vehicle wiring diagrams).

AFTER REPAIR	Carry out a complete check using the diagnostic tool.

GETtheMANUALS.org

ALP2	No buzzer

NOTES	Only investigate this customer complaint **after a full check using the diagnostic tool** (no faults must be present or stored).

Using the diagnostic tool Main Data screen, check that the parking distance control system is on.
The status **ET003 Parking distance control function** must be READY (and the red warning light on the parking distance control switch must be off).

Is status ET003 READY?

NO → Turn on the parking distance control by pressing the switch for **1 or 3** seconds (the red light should go out).
Note:
For more information concerning the activation of the system, consult the interpretation of status **ET003 Parking distance control**.

YES ↓

Is status ET001 "YES", with reverse gear engaged?

NO → Apply the interpretation procedure for status **ET001**

YES ↓

Using the diagnostic tool configuration readings screen, check that the buzzer volume has not been switched off (**LC001 Buzzer volume** should not be ZERO)

Is the LC001 function ZERO

YES → Reconfigure the buzzer volume using the diagnostic tool (command **CF001 Buzzer volume**).

NO ↓

(A)

AFTER REPAIR	Check that the system is operating correctly.

GETtheMANUALS.org

ALP2 CONTINUED 1	

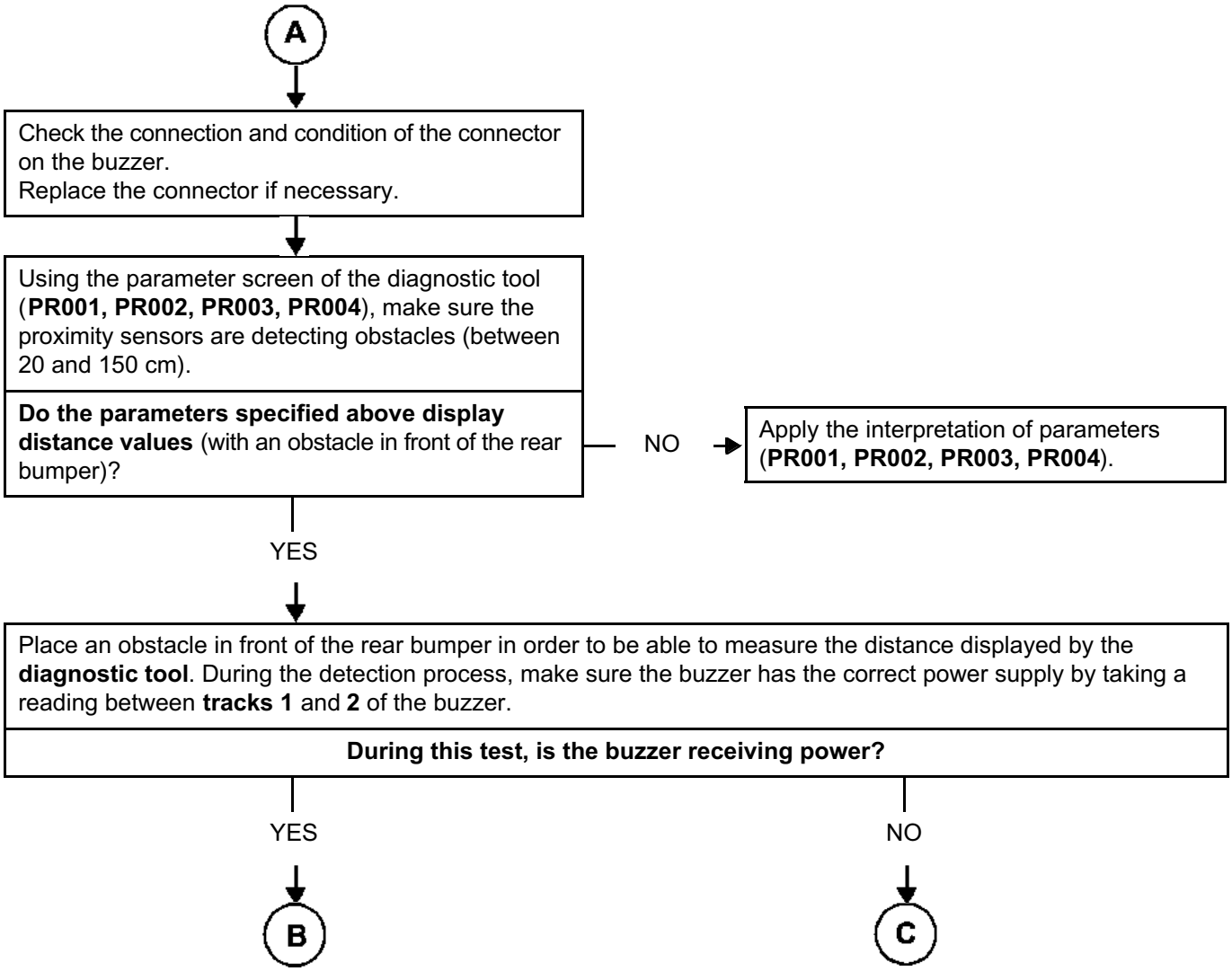

AFTER REPAIR	Check that the system is operating correctly.

GETtheMANUALS.org

ALP2 CONTINUED 2	

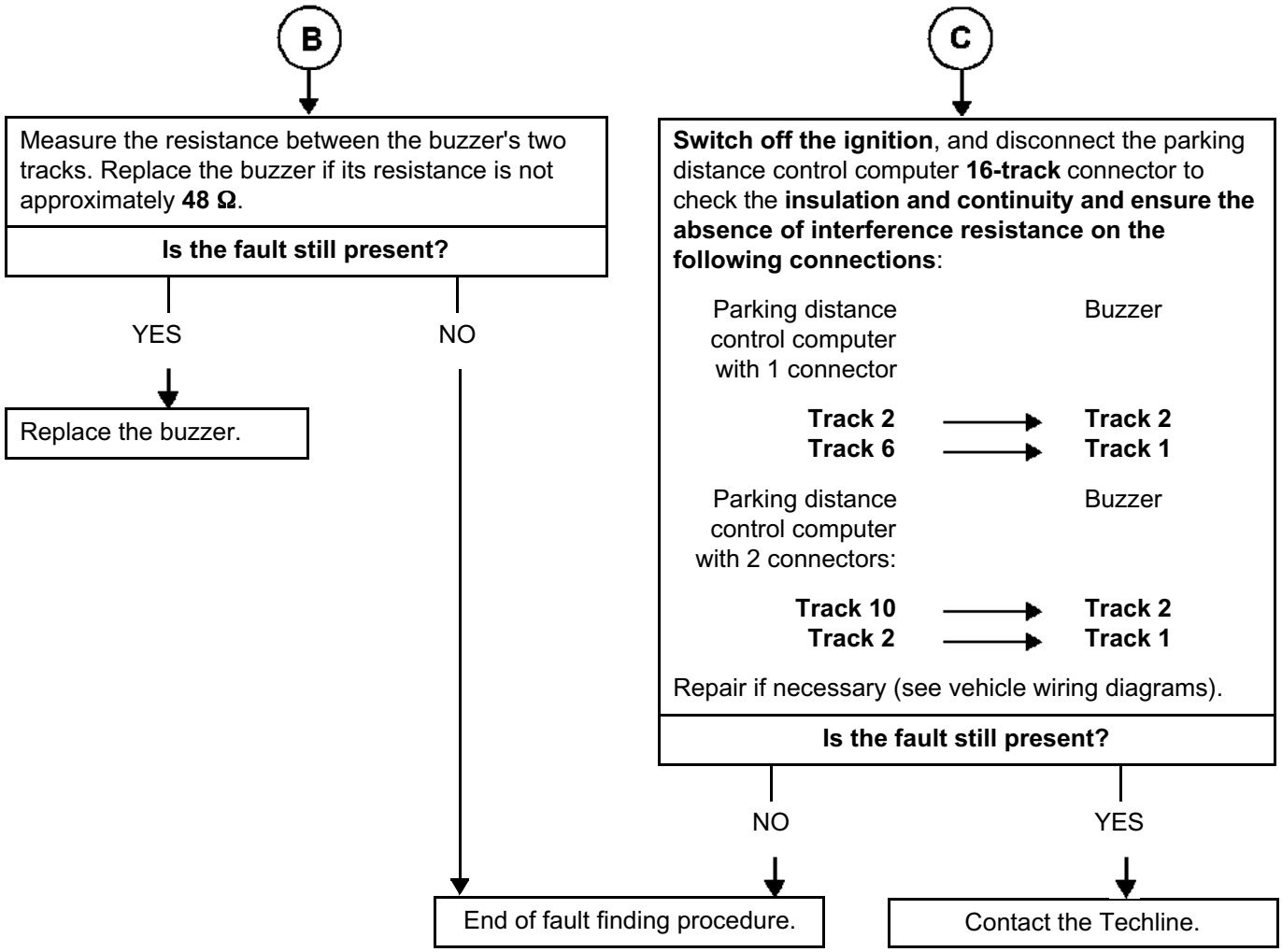

AFTER REPAIR	Check that the system is operating correctly.

PARKING DISTANCE CONTROL
Fault finding - Fault Finding Chart

GETtheMANUALS.org

ALP3	Buzzer sounds constantly (no obstacle detected)

NOTES	Only investigate this customer complaint **after a full check using the diagnostic tool** (no faults must be present or stored).

Switch off the ignition, and disconnect the parking distance control computer connector to check the **insulation and continuity and ensure the absence of interference resistance** on the following connections:

1 connector: Parking distance control computer — Buzzer

Track 2	→	**Track 2**
Track 6	→	**Track 1**

Note:
The line coming from **track 2** of the computer must be insulated against + 12 V and the line coming from **track 6** of the computer must be insulated against earth.

2 connectors:

Parking distance control computer **16-track** connector — Buzzer

Track 10	→	**Track 2**
Track 2	→	**Track 1**

Repair if necessary (see vehicle wiring diagram).

Is the fault still present?

NO → End of fault finding procedure.

YES ↓

With no obstacle less than 150 cm in front of the rear bumper, check that the distance parameters on the diagnostic tool are 255 cm out of range (**PR001, PR002, PR003, PR004**).
If the parameters display a setting even though there is no obstacle in front of the rear bumper, make sure nothing is interfering with the reading (sticker, mud, snow etc. on the rear bumper).
Repair if necessary.

↓

End of fault finding procedure.

AFTER REPAIR	Check that the system is operating correctly.

GETtheMANUALS.org

VEL SATIS

8 Electrical equipment

88B MULTIPLEXING

Fault finding - Introduction	88B - 1
Fault finding - Allocation of computer tracks	88B - 5
Fault finding - Configuration	88B - 6
Fault finding - Fault summary table	88B - 8
Fault finding - Interpretation of faults	88B - 9
Fault finding - Customer complaints	88B - 14
Fault finding - Fault Finding Chart	88B - 15

BJ0E - BJ0J - BJ0K - BJ0M - BJ0P - BJ0V

77 11 311 302 **FEBRUARY 2006** **EDITION ANGLAISE**

"The repair procedures given by the manufacturer in this document are based on the technical specifications current when it was prepared.

The methods may be modified as a result of changes introduced by the manufacturer in the production of the various component units and accessories from which his vehicles are constructed."

All rights reserved by Renault s.a.s.

Copying or translating, in part or in full, of this document or use of the service part reference numbering system is forbidden without the prior written authority of Renault s.a.s.

© Renault s.a.s. 2006

GETtheMANUALS.org

INTRODUCTION

Description of the multiplex network:

The multiplex network consists of a twisted pair of wires connected to several vehicle computers.
These two wires are called multiplex line H and multiplex line L.

There may be two multiplex networks, depending on the vehicle's equipment.
- the **multiplex line V** (vehicle: injection, ABS, instrument panel, etc.) is always present,
- the **multiplex line M** (multimedia: navigation, radio, hands-free telephone) depending on the vehicle's equipment.

Note:
The RENAULT tool can only perform fault finding on the multiplex line V multiplex network.

Data exchanged by computers on the networks circulates at a communication speed of:
- 250 kbit/s for **multiplex line V** network.
- 500 kbit/s for **multiplex line M** network.

The **multiplex line V** network has two computers, each with an internal resistance of **120 Ω** (network termination resistances):
- **the injection computer,**
- **UCH.**

The **Multimedia multiplex connection H** network's terminating resistance is in the navigation computer and radio for vehicles fitted with navigation.

PURPOSE

- The purpose of the multiplex network test is to determine the computers present on the vehicle's multiplex network as well as the cause of possible inter-computer communication faults.

- It also serves to determine the functions installed in the vehicle, which are sometimes housed in various computers (distributed functions).

- The test also checks the condition of multiplex network segments.

- The multiplex network test can also run fault finding on computers disconnected from the multiplex network; this provides an overview of the vehicle's electronic layout.

GETtheMANUALS.org

MONITORING MULTIPLEX NETWORK OPERATION

Vehicle computer power supply for fault finding:

This step is the essential starting point for any computer fault finding procedure.

It ensures that the network is correctly connected at the terminals of each computer and that the signal is correctly sent to it and received by it. This function also reads the number of faults present in the computers.

The Test multiplex network function is started after the user selects the vehicle then selects the Test computers icon.

After the network check, the other functions become accessible.

MULTIPLEX NETWORK TEST PROCEDURE

- Establish dialogue with the computers storing the vehicle configuration (identification reading).
- Read vehicle configuration in the computer containing the multiplex network configuration (Airbag).
- Read list of computers on which fault finding may be performed in the computer containing the information.
- Computer interrogation.
- Physical (electrical) measurements on the multiplex line network.

IMPORTANT
There are three diagnostic lines, depending on the computer:

Fault finding performed on computer by the multiplex line V network:

- **Instrument panel (Vdiag 11).**
- **S3000 Injections.**

Fault finding procedure performed on computer by the multiplex line M network:

- **Hands-free kit.**

Fault finding procedure performed on computer by line K:

- **UCH.**
- **Airbag.**
- **ABS/ESP.**
- **Instrument panel (except Vdiag 11).**
- **Automatic transmission.**
- **Air conditioning.**
- **Automatic cruise control.**
- **Other injection computers.**
- **Automatic parking brake.**
- **Rear parking proximity sensor (not present in the multiplex line).**
- **Tyre pressure monitor.**
- **Heater (not present on the multiplex line).**
- **Xenon bulb (not present on the multiplex line).**

GETtheMANUALS.org

ACQUISITION AND DISPLAY OF THE RESULTS

The acquisition screen is made up of a bar graph which changes when the various initialisation, acquisition and data analysis stages are updated.
At the end of the test, the tool displays a screen with the test result.

How to read the topological diagram:

The results display screen consists of three screens:
- the upper zone: fault finding procedure result message,
- the left-hand centre zone: topological diagram (not always available),
- the right-hand centre zone: interpretation of the results from the various vehicle computers and list.

COMPUTERS

- **Valid:** green border, green lettering.
- **Not detected:** red border, red lettering.
- **Do not support fault finding:** black border, black lettering.
- **Not recognised:** red border, red lettering + exclamation mark.

SEGMENTS

- **Valid:** green dash.
- **Faulty:** red dash.
- **Cannot support fault finding:** black dash.

Interpreting test result charts

On the **Faults** tab, the computers are organised into the following groups:
- **Not detected** if the computer failed to respond to the tool's identification request.
  Within the **not detected** category, the computers are subdivided into **Stores multiplex network configuration** and **Does not store multiplex network configuration**.
- **Not recognised** if the computer is detected but cannot be identified from its response.

On the **Information** tab, the computers are organised and listed as follows:
- **Cannot support fault finding**, if the computer cannot support fault finding with the tool and therefore was not queried.
- **Valid** if the computer responded correctly to the tool's request.

If the **Proceed** icon in the bottom right-hand corner is selected, a new screen will appear with the following tab:

Under the **Results** tab the computers are organised into the following groups:
- **Faulty** if the computer is recognised and has a non-zero number of faults.
- **OK** if the computer was detected, recognised and has no faults.
- **Not recognised** if the computer was detected but could not be identified from its response.
- **Not detected** if the computer can support fault finding but failed to respond.

GETtheMANUALS.org

FUNCTION TESTING

The function test can be accessed by clicking on the **List of functions** icon.

- The vehicle function tests screen resembles the multiplex network test screen with a diagram of the network layout if this is known and displayed.
- The **Function** tab displays the various computers involved in the functions whether distributed or not distributed over the various computers.
- The **Info** tab displays the other possible functions found on the vehicle concerned.
- Selecting a function from the list of functions enables computers not involved in this function to be shaded, thus indicating the computers involved in this function.
- The **Fault finding** button runs fault finding on the function selected from the list.

REPAIR HELP

● **Help with detecting computer or faulty segment:**

If the multiplex network is completely frozen, this command can isolate multiplex network segments and thereby rule out those that respond correctly to the tool. This makes it easier to pinpoint the cause of the fault.
The algorithm for help with locating faults is intended for dealing with electrical faults present solely on the multiplex line; it is therefore essential that connectors and computers not attached to the multiplex line V are not taken into consideration.

● **A test for multiplex network faults by using physical measurements:**

When a multiplex network segment has a short circuit, the computers can no longer communicate with each other or with the diagnostic tool. At this point, the network test is not operational.
The CLIP tool can identify several types of faults by taking electrical measurements on the multiplex line H and multiplex line L multiplex network. It can detect a multiplex line L/multiplex line H short circuit, a multiplex line L/+ 12 V short circuit, a multiplex line H/+ 12 V short circuit, and a multiplex line H/earth short circuit.
Then, by disconnecting the connectors followed by the computers listed below in sequence, it is possible to determine or indicate the segment causing the fault on the multiplex network.

● **Disconnecting connectors and computers:**

– **Help with locating network faults** screen

In accordance with the diagnostic tool algorithm and the result obtained during the procedure, the sequence of computer and connector disconnection recommended by the diagnostic tool is likely to be the following: Injection, ABS/ESP, BVA (automatic transmission), COSLAD (Xenon bulb), Instrument panel, UCH, Central communications unit = ITS (intelligent transport system) Heating and ventilation system, Automatic parking brake, node R262, Airbag, node R265, node R316, node R369.

Note:
The tool sometimes requests that computers not present in the vehicle concerned be disconnected; in this case, make sure that the computer concerned is not installed, and confirm that the component concerned had been disconnected and reconnected and continue the test.

● **Network physical measurements** screen

Using the second screen, the operator can check the status of the multiplex network after each disconnection / reconnection procedure involving the connector or computer selected. This enables the operator to check the status of the multiplex network after disconnecting each component.

GETtheMANUALS.org

Summary table of multiplex line H and multiplex line L connections

		Input			Output		
		Connector	Can H	Can L	Connector	Can H	Can L
S3000 injection	SAGEM	Black	A4	A3	Brown	K4	K3
V4Y injection		Black	12	13	Black	31	32
G9T 600 injection		Black	A4	A3			
G9T 702-703 injection		Grey	B4	A4	Brown	A1	B1
P9X injection		Black	67	48			
Automatic gearbox		Black	28	42			
ABS + ESP		Blue	11	15	Blue	12	14
Automatic parking brake		Grey	A3	A2			
Airbag/pretensioners		Yellow	58	59			
Air conditioning or climate control		Black	10	9			
UCH		Brown	11	1	Green	30	40
Instrument panel		Black	10	11	Black	Voice synthesiser	
						8	13
Steering lock		Black	3	6			
Central Communication Unit		Black	6	7	Black	3	4
Automatic cruise control		Black	2	4			
Voice synthesiser		Black	6	7			
Tyre pressure monitoring system		Black	9	11			
Automatic transmission repeater		Black	1	4			
OBD		Grey	6	14	Grey	12	13
R262 Engine/passenger compartment		Grey	D3	E3			
R265 Passenger compartment/front end panel		Black	C4	C5			
R316 Passenger compartment/underbody		Blue	C7	C6			

GETtheMANUALS.org

MULTIPLEX NETWORK CONFIGURATION

The computer storing the multiplex network configuration on this vehicle is the **Airbag** computer.

The **Configuration** screen consists of two tabs for displaying and modifying:
- The first tab: **Multiplex network configuration** provides information on the multiplex network version and the list of computers defined as present on the multiplex network.
- The second tab: **Configuration of computers supporting fault finding** indicates the relevant diagram number, and the list of computers defined as able to support fault finding with the RENAULT tool.

Make sure that the information displayed on the two tabs is correct.

IMPORTANT
First repair the computers containing the multiplex network configuration (Airbag) to be able to display the screen with the multiplex network configuration diagram for the vehicle undergoing fault finding.

Computer	Multiplex network configuration Multiplex line V	Configuration of computers that can support fault finding
Injection	PRESENT	YES
ABS or ABS/ESP	PRESENT	YES
UCH	PRESENT	YES
Automatic gearbox	PRESENT (option)	YES (option)
Automatic parking brake	PRESENT (option)	YES (option)
Instrument panel	PRESENT	YES
Airbag/pretensioners	PRESENT	YES
Steering lock	PRESENT	NO
Central Communication Unit	PRESENT (option)	NO
Air conditioning	PRESENT	YES
Proximity sensor	ABSENT	YES (option)
Automatic cruise control	PRESENT (option)	YES (option)
Voice synthesiser	PRESENT (option)	NO
Tyre pressure monitoring system	PRESENT	YES

GETtheMANUALS.org

MULTIPLEX NETWORK CONFIGURATION (continued)

Computer	Multiplex network configuration Multiplex line V	Configuration of computers that can support fault finding
Automatic transmission indicator	PRESENT (OPTION)	NO
Hands-free kit	PRESENT (option)	YES (option)
Heater	ABSENT	YES
Xenon bulb	ABSENT	YES (option)

Option: depending on equipment level

If during the multiplex network test the following message appears: No dialogue with some computers: check power supply and diagnostic lines before relaunching the test.
– This does not prevent the multiplex network from being viewed.
– Check if too many computers have not been listed in the configuration: update the multiplex network according to the table above.

GETtheMANUALS.org

NETWORK CONFIGURATION
MULTIPLEX NETWORK NOT OPERATIONAL
FAULTY SEGMENT
FAULTY COMPUTER
UNRECOGNISED COMPUTERS ON THE NETWORK

GETtheMANUALS.org

NETWORK CONFIGURATION

NOTES	**The configuration is recorded with the ignition on; apply the forced + APC procedure (see Introduction)** **It can be run from the multiplex network test results screens.**

The tool presents the Airbag configuration.

Configuration involves the following steps:
– Select the computer to be modified.

– Choose the multiplex network diagram version.

This is the multiplex network diagram version. The version number increases with each change to the multiplex network wiring in this vehicle.

WARNING
The version **1** number is for the VELSATIS ph1 all engines (except P9X).
The version **2** number is for the VELSATIS ph1 with P9X.

Choice of computers in the vehicle present on the network
Always present in the vehicle:
- Injection,
- the ABS/ESP,
- the instrument panel,
- the UCH,
- the airbag/pretensioners.
- steering lock,
- manual heating and ventilation,
- tyre pressure monitor.

+ the vehicle options:
- the automatic gearbox,
- automatic cruise control,
- climate control
- automatic parking brake,
- intelligent transport system (ITS) = Communication unit,
- hands-free kit.

IMPORTANT
A computer connected to the multiplex network but not registered in the computer containing the multiplex network configuration will not be checked in the multiplex network test.
Correct the configuration by registering as present the computer missing from the Airbag configuration.
Start the multiplex network test again after modifying the configuration.

GETtheMANUALS.org

MULTIPLEX NETWORK NOT OPERATIONAL

NOTES	**First check that the computer at the end of the faulty segment is properly powered (earth, + battery, + accessories or + after ignition).** **Always check the computer conformity.** **IMPORTANT** Switch off the ignition or remove the RENAULT card from the card reader, check that the side lights are off and wait for **1 minute**.

Finding the fault type	***NOTES***	Obtain a copy of the multiplex network diagram for the vehicle. (Diagnostic socket diagram).

Measure the resistance between **tracks 6** and **14** of the diagnostic socket.
What is **the resistance**?

0 Ω	The two lines are in short circuit (consult the **repair help** section).
60 Ω	Check that there is **earth, + battery feed, + accessories feed or + after ignition feed at the injection computer and UCH terminals**.
Between 70 Ω and 110 Ω	Check that there is no interference resistance on **tracks 6 and 14**, and then check that there is no short circuit to earth or + battery feed.
120 Ω	Open circuit on one or two lines. Disconnect the injection computer and check the multiplex connection between the diagnostic socket and the injection computer. Is the multiplex connection correct?

YES	Check that the resistance is approximately **120 Ω** between the two network tracks on the injection computer: – If the resistance is not approximately **120 Ω, contact Techline**. – If the resistance is **120 Ω**, check the continuity and absence of interference resistance on the multiplex connection between the diagnostic socket and the UCH. Repair if necessary.
	Check that the resistance is approximately **120 Ω** between the two network tracks on the UCH computer: – If the resistance is not approximately **120 Ω, contact Techline**.
NO	Repair the multiplex connection between the diagnostic socket and the injection computer. If the fault is still present, **contact your Techline**.

AFTER REPAIR	Run the multiplex network test again using the diagnostic tool. Clear the stored faults on all the computers connected to the network. Deal with any other faults.

GETtheMANUALS.org

FAULTY SEGMENT

NOTES	**First check that the computer at the end of the faulty segment is properly powered (earth, + battery, + accessories or + after ignition).** **Always check the computer conformity.** **IMPORTANT** It may be that the tool cannot exactly determine which segment(s) are faulty. It will then suggest several segments that could be faulty. In this event, repair the segment closest to the diagnostic socket.

Isolate the faulty segment by disconnecting both ends of the segment. Check the condition of the connectors.
Check the continuity and insulation of the multiplex line H and multiplex line L lines between the two connectors on the isolated segment.
For computer and connection track allocations (see **multiplex line H and multiplex line L connections summary table**).
Perform the necessary operations to check the continuity of the two lines (for example, replacing the wiring).
Make sure that the computer present in the vehicle is compatible and that the data it is producing is correct.

Reconnect the segment.
Run the multiplex network test again using the diagnostic tool.
Is the segment still declared faulty?

NO	End of fault finding.
YES	Are there other faulty segments?

NO	Repeat the multiplex network tests to check the continuity and insulation of the multiplex line H and multiplex line L lines between the end of the faulty segment and the diagnostic socket.
YES	Apply the same procedure to each segment.

AFTER REPAIR	Run the multiplex network test again using the diagnostic tool. Clear the stored faults on all the computers connected to the network. Deal with any other faults.

GETtheMANUALS.org

FAULTY COMPUTER

NOTES	Make sure that the computers installed in the vehicle are the correct type and are compatible with the vehicle. Check the power supply to the computers (earth, + battery, + accessories feed or + after ignition).

Make sure that the computer **wake-up mode** is in full working order on the vehicle and is properly assimilated by the computers.

The wake-up mode is:
– **Timed supply:** UCH, instrument panel, parking brake.
– **+ Accessories feed:** Heating and ventilation system, Communications unit, ABS/ESP.
– **+ After ignition feed:** Injection, Airbag/Pretensioners, Automatic transmission, Xenon bulbs.
In **+ accessories feed** these computers will not appear.

– Switch to **computer fault finding** mode.

Attempt to establish dialogue with computers.

- No dialogue between computers and the diagnostic tool: see ALP 1 **No dialogue with the computer** of the computer(s) on which there is no dialogue with the diagnostic tool.
  Check the connections to the computers and that there are no open circuits.
  Repair if necessary.

- Computers are not displaying all the information on their identifications:
  Check in the Workshop Repair Manual or the World Vehicle Database that the computer is compatible with the vehicle.
  Check that the CLIP diagnostic tool update is recent enough to be able to deal with faults on the vehicle.

If no faults or open or short circuits have been detected after these checks, contact Techline.

AFTER REPAIR	Run the multiplex network test again using the diagnostic tool. Clear the stored faults on all the computers connected to the network. Deal with any other faults.

GETtheMANUALS.org

UNRECOGNISED COMPUTERS ON THE NETWORK

NOTES	– Check computer compatibility with the vehicle.

Check that the CLIP diagnostic tool update is recent enough to be able to deal with faults on the vehicle.

– Switch to **computer fault finding** mode.

Attempt to establish dialogue with computers.

- If there is no dialogue between computers and the diagnostic tool: see ALP 1 **No dialogue with the computers** of the computer(s) on which there is no dialogue with the diagnostic tool.
  Check the connections to the computers and that there are no open circuits.
  Repair if necessary.
- If there is communication with computers:
  Make sure that the computer identification information is correct and matches the vehicle in fault finding.

– Check the information on the computers:
  – Parts Department part no.:
  – Vdiag No.:
  – Program No.:
  – Version:
  – Calibration No.:

If no faults or open or short circuits have been detected after these tests, contact Techline.

AFTER REPAIR	Run the multiplex network test again using the diagnostic tool. Clear the stored faults on all the computers connected to the network. Deal with any other faults.

GETtheMANUALS.org

NO DIALOGUE WITH THE COMPUTERS	→ ALP 1
NO TOPOLOGY DIAGRAM OR CONFIGURATION TABLE DISPLAY AT THE END OF THE MULTIPLEX NETWORK TEST	→ ALP 2
CONFIGURATION TABLE DISPLAY AT THE END OF THE MULTIPLEX NETWORK TEST	→ ALP 3

GETtheMANUALS.org

ALP 1	No dialogue with computers

NOTES	**Vehicle computer power supply for fault finding:** Engine stopped, ignition on. Connect the diagnostic tool and perform the required operations.

Try the diagnostic tool on another vehicle.
Check that the tool update version is **CD no. 52** or more recent version.

Check:
– the connection between the diagnostic tool and the diagnostic socket (connection and cable in good condition),
– the computers' power supply.
– the engine and passenger compartment fuses.

Check that the **CLIP** sensor is supplied by tracks **16 (+ 12 V), 4** and **5 (earth)** of the diagnostic socket, displayed by the two red diodes on the sensor coming on.
Check that the **CLIP** sensor is supplied by the computer's USB port (red diode).
Make sure that the **CLIP** sensor is communicating properly with the vehicle's computers; this can be seen by the two green diodes on the sensor lighting up.

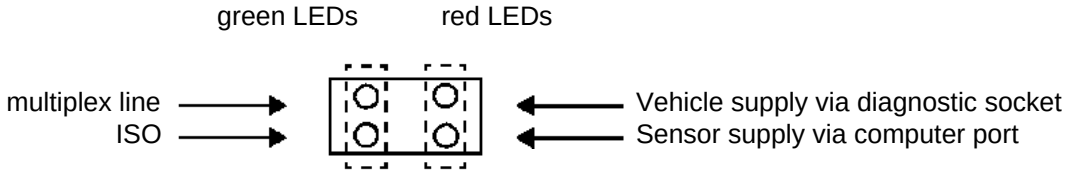

Check the following tracks on the diagnostic socket:
Track 1 → **+ After ignition feed**
Track 16 → **+ Battery feed**
Tracks 4 and 5 → **Earth**
Repair if necessary.

Computer connected to multiplex line V
If the fault is still present, check the **continuity** and **insulation** of the lines:
Multiplex line H (diagnostic socket track 6)
Multiplex line L (diagnostic socket track 14)

With a multimeter, make sure that the voltages at the diagnostic socket terminals are:
– **2.5 V** across **multiplex line H (track 6)** and earth (**tracks 4 and 5**) (Average values)
– **2.5 V** across **multiplex line L (track 14)** and earth (**tracks 4 and 5**) (Average values)

Computer connected to Multimedia multiplex line
If the fault is still present, check the **continuity** and **insulation** of the lines:
Multiplex line H (diagnostic socket track 13)
Multiplex line L (diagnostic socket track 12)

With a multimeter, make sure that the voltages at the diagnostic socket terminals are:
– **2.5 V** across **multiplex line H (track 13)** and earth (**tracks 4 and 5**) (Average values)
– **2.5 V** across **multiplex line L (track 12)** and earth (**tracks 4 and 5**) (Average values)

To locate a short circuit on the vehicle's multiplex network, refer to the **Repair help** section.

GETtheMANUALS.org

ALP 2	No topology diagram or configuration table display at the end of the multiplex network test

IMPORTANT
When the UCH is replaced, it is normal that the topological diagram and the configuration table are not displayed.
In this case:
The tool displays **Unknown vehicle configuration: Check undetected or unrecognised computers**.
Click on OK.
In the screen with the list of computers, click on **continue**.
Select **UCH** then click on **run fault finding**.
Program the UCH and the cards (see **87B, Passenger compartment connection unit**).
Restart the multiplex network test.

The topology cannot be displayed under the following conditions:

1 - The computer containing the multiplex network configuration has not responded.
2 - The multiplex network is not operational; therefore dialogue is impossible.
3 - In the **multiplex network** tab on the configuration screen, an incorrect **diagram version** number has been entered in the computer containing the network configuration.
4 - No **diagram version** has been entered in the computer containing the configuration.

1 - The computer containing the multiplex network configuration has not responded.
First check that the computer containing the configuration (Airbag) is supplied (earth + battery feed, + accessories feed or + after ignition feed).
Check the condition of the multiplex network and the continuity and insulation of the multiplex line H and multiplex line L lines between the computers storing the configuration.

2 - The multiplex network is not operational; therefore dialogue is impossible.
See **Multiplex network not operational** fault

3 - In the multiplex network tab on the configuration screen, an incorrect diagram version number has been entered in the computer containing the network configuration.
See **Configuration: Multiplex network configurations**

4 - No diagram version has been entered in the computer containing the configuration.
See **Configuration: Multiplex network configurations**

GETtheMANUALS.org

ALP 3	Configuration table display at the end of the multiplex network test

NOTES	Use this ALP if the tool loads the configuration screen at the end of the multiplex network test. The configuration chart is always accessible through the **Configuration** icon. Update the vehicle configuration again then restart the multiplex network test. Make sure that the two tabs are consistent before rerunning the test.

The RENAULT diagnostic tool loads the configuration screen directly under the following conditions:

- **MULTIPLEX NETWORK** tab
  - The **diagram number** on the computer containing the multiplex network configuration is incorrect (see **Network configuration**).
    In this instance, the following message is displayed when the multiplex network test is being run: **Unknown vehicle configuration: Check tool update.**
  - The computer containing the network version is blank (if Airbag computer has been replaced).
- **COMPUTERS SUPPORTING FAULT FINDING** tab
  - Inconsistency between the list of computers entered and the computers actually detected on the vehicle. Certain computers present in the vehicle are recorded missing in the computer storing the network configuration (see **Multiplex network configurations**). In this instance, the following error message is displayed when the multiplex network test is being run: Some computers respond to the diagnostic tool even if they are not listed in the computer configuration.

GETtheMANUALS.org

VEL SATIS

8 Electrical equipment

88C AIR BAG AND PRETENSIONERS

ACU3
Vdiag N°: 14

Fault finding - Introduction	88C - 1
Fault finding - Fault Interpretation	88C - 5
Fault finding - Conformity check	88C - 52
Fault finding - Help	88C - 53
Fault finding - Customer complaints	88C - 54
Fault finding - Fault finding chart	88C - 55

BJ0E - BJ0J - BJ0K - BJ0M - BJ0P - BJ0V

77 11 311 302 **FEBRUARY 2006** **EDITION ANGLAISE**

"The repair procedures given by the manufacturer in this document are based on the technical specifications current when it was prepared.

The methods may be modified as a result of changes introduced by the manufacturer in the production of the various component units and accessories from which his vehicles are constructed."

All rights reserved by Renault s.a.s.

Copying or translating, in part or in full, of this document or use of the service part reference numbering system is forbidden without the prior written authority of Renault s.a.s.

© Renault s.a.s. 2006

AIR BAG AND PRETENSIONERS
Fault finding - Introduction

GETtheMANUALS.org

This document presents the diagnostic strategy applicable to all AUTOLIV ACU3 AIR BAG computers - with VDIAG 14 fitted on VEL SATIS.

In order to implement fault finding on this system, it is essential to have the following items available:

- **The wiring diagram of the function for the vehicle concerned,**
- **The tools listed under the heading Special tooling required.**

GENERAL APPROACH TO FAULT FINDING

- **Use one of the diagnostic tools to identify the system equipping the vehicle (to read the computer family, the program number, the Vdiag, etc.).**

- **Locate the Fault finding documents corresponding to the system identified.**

- **Take note of information contained in the introductory sections.**

- **Read the faults stored in the computer memory and use the Fault interpretation section of the documents. Reminder: Each fault is interpreted for a particular type of storage (fault present, fault stored in memory, fault present or stored). The specified checks for dealing with each fault are therefore only to be performed if the fault declared by the diagnostic tool can be identified in the document by its type. The way in which the fault is stored should be considered when using the diagnostic tool following switching off and switching on the ignition again**
  If a fault is interpreted when it is declared stored, the conditions for application of the fault finding procedure appear in the Notes box. When these conditions are not satisfied, use the fault finding procedure to check the circuit of the faulty part, since the fault is no longer present on the vehicle. Perform the same operation when a fault is declared as stored by the diagnostic tool but is only interpreted in the documentation as a present fault.

- **Carry out the conformity check (appearance of possible faults not yet identified by the system's self diagnosis procedure) and implement the relevant fault finding strategies according to the results.**

- **Confirm repair (disappearance of the problem reported by the customer).**

- **Use the Customer complaint fault finding strategies if the problem persists.**

<u>Special tooling required for operations on the air bag and seat belt pretensioner systems:</u>

- Diagnostic tools (except XR 25).
- Set of adapters and borniers used for the Air bag and pretensioner wiring harness checking function of the CLIP and NXR tools or XRBAG for an update including the new **75-track B53** adapter on the orange computer base.
- 12-track bornier **Elé. 1645.**
- 28-track bornier **Elé. 1616.**
- Multimeter.

- Modifying the series of new air bag ignition module connectors entails modifying the dummy ignition module.

LOCAL MODIFICATION OF THE DUMMY IGNITION MODULE:

Remove the ignition module from its red mounting and remove one of the brown locking notches.

GETtheMANUALS.org

REMINDERS:

During operations on the air bag/seat belt pretensioner systems it is vital that you lock the computer using the diagnostic tool to prevent any risk of accidental triggering (all the ignition lines will be inhibited). The locked mode is signalled when the instrument panel warning light comes on.

Without the diagnostic tool, switch off the ignition and remove the supply fuse from the system, then wait at least **2 seconds for the power reserve capacity to discharge.**

Never measure the air bag or pretensioner ignition lines with any device other than the XRBAG or by using the Air bag and pretensioner wiring harness check function on the CLIP and NXR tools.

Before using a dummy ignition module, ensure that its resistance is between **1.8** and **2.5 ohms**

Ensure during the operation that the voltage supply to the computer does not drop below **10 volts.**

GETtheMANUALS.org

SYSTEM CONFIGURATION DIAGRAM (FRONT section)

Front and side (curtain + chest) air bags and pretensioners (front + rear)

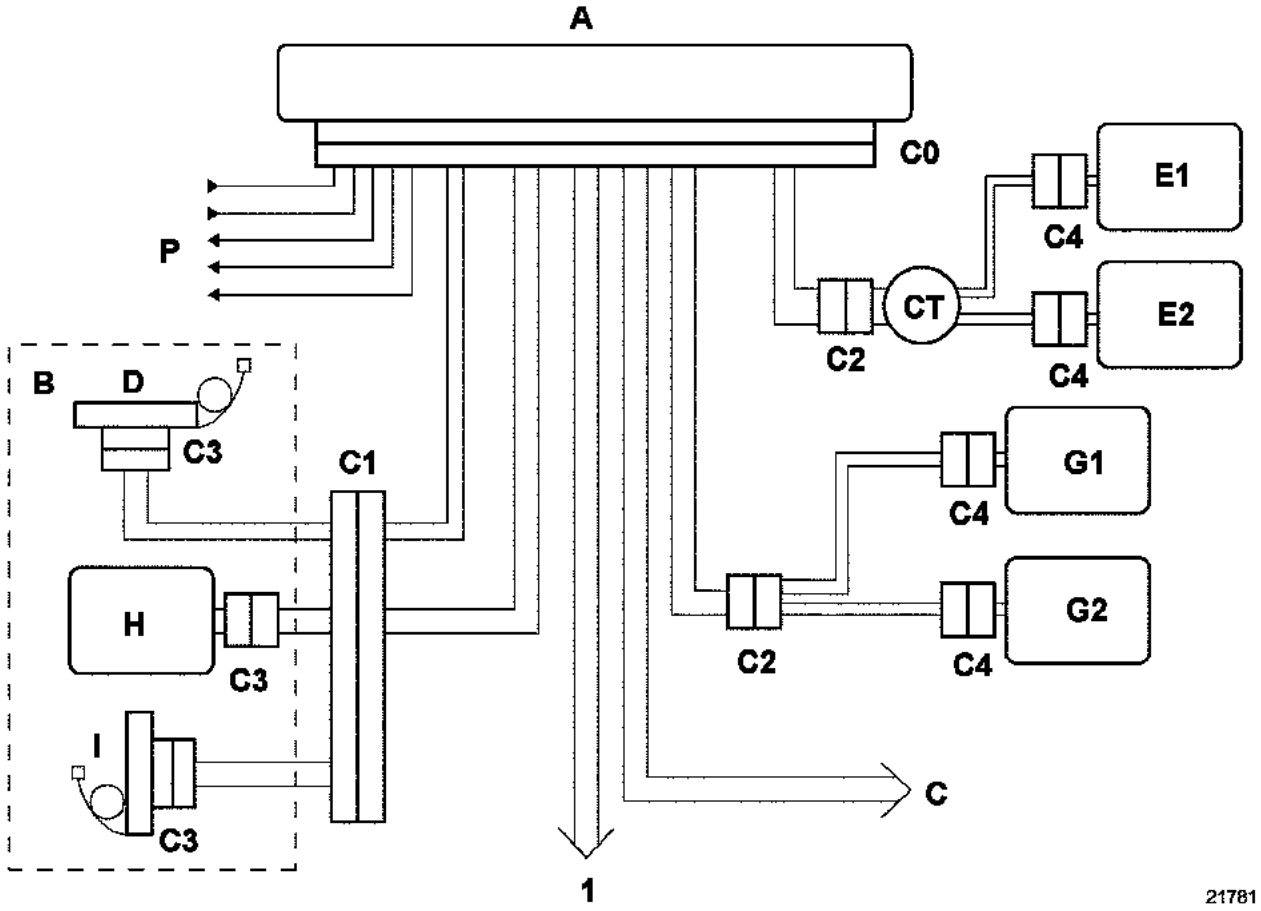

1 To rear wiring

GETtheMANUALS.org

SYSTEM CONFIGURATION DIAGRAM (REAR section)

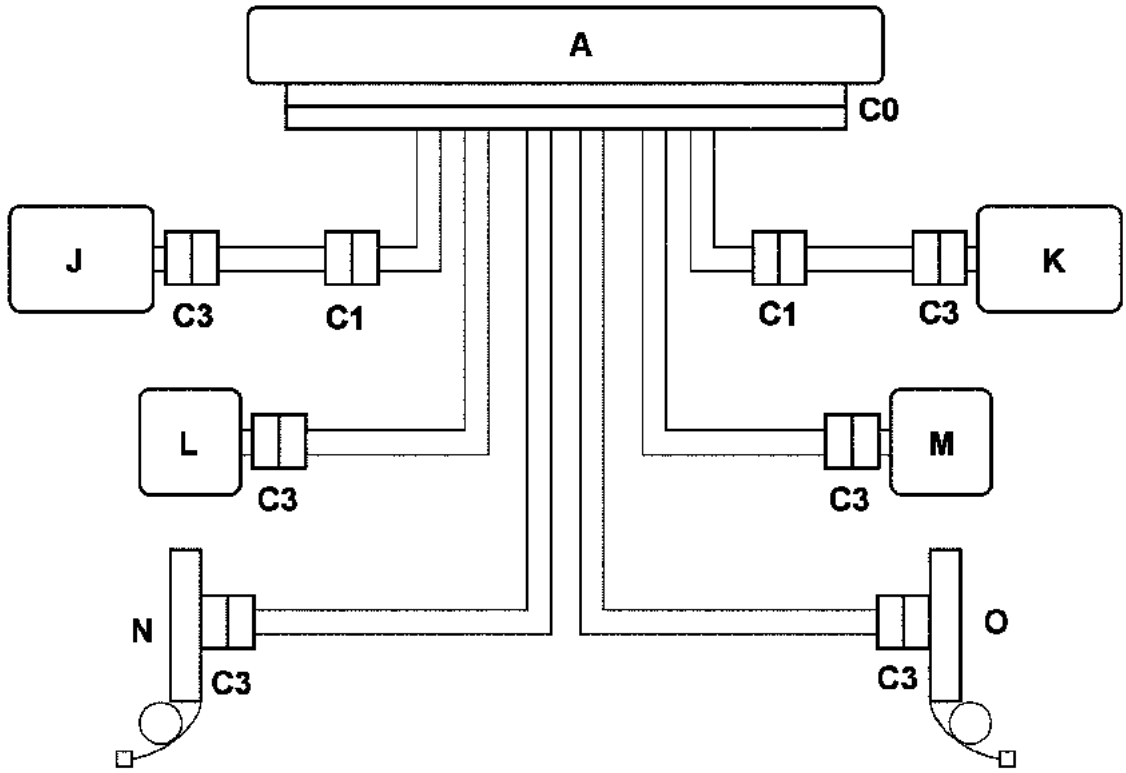

21780

A Central unit
B Driver's seat
C Passenger seat
D Buckle pretensioner
E Driver's front air bag ignition module
G Passenger front air bag ignition module
H Front side air bag ignition module
I Seat belt pretensioner
J/K Curtain air bag ignition modules
L/M Rear side air bag ignition modules
N/O Rear seat belt inertia reels

CT Rotary switch

+ 12 volts/Earth
P Warning light/Diagnostic lines
Impact sensors/Impact information

	FRONT AIR BAGS	
	Measuring point	**Correct value**
Driver	C0, C2 and C4	1.5 to 7.1 ohms
Passenger	C0, C2 and C4	1.5 to 4.4 ohms
	SIDE AIR BAGS AND PRETENSIONERS	
	Measuring point	**Correct value**
	C0, C1 and C3	1.5 to 4.4 ohms

Correct insulation value: display > = 100 h or 9999 flashing.

ACU3.Vdiag14.X73 1.0

GETtheMANUALS.org

DF002 **PRESENT**	COMPUTER SUPPLY VOLTAGE 1.DEF: Voltage outside tolerances 2.DEF: Too many micro breaks

NOTES	**Special notes:** use the **B53** adapter to work on the computer connector.

1.DEF - 2.DEF	***NOTES***	None.

Carry out the operations necessary to obtain the correct computer power supply:
10.5 volts ± 0.1 < correct voltage < 16 volts ± 0.1.

- Check the battery charge.
- Check the charge circuit.
- Check the tightening and the condition of the battery terminals.
- Computer earth check.
- Check the condition of the computer and that it is locked.

AFTER REPAIR	Deal with any faults detected by the diagnostic tool. Clear the computer memory.

GETtheMANUALS.org

DF010 **PRESENT**	FAULT WARNING LIGHT CIRCUIT 1.DEF : Fault finding performed by the instrument panel.

NOTES	**Special notes:** None.

Apply the fault finding procedure relevant to this fault in the instrument panel fault finding information section.

AFTER REPAIR	Clear the computer memory then switch off the ignition. Carry out the check again using the diagnostic tool and, if there are no faults, unlock the computer.

GETtheMANUALS.org

DF016 **PRESENT**	COMPUTER CONFIGURATION

NOTES	**Special notes:** None.

This fault indicates an inconsistency between the computer configuration and the vehicle equipment detected by the computer. The computer has detected the presence of an element additional to its configuration.

Modify the computer configuration using the command:
NXR: **System components configuration**".
CLIP AND OPTIMA: **Ignition module configuration**".

AFTER REPAIR	Clear the computer memory then switch off the ignition. Check again using the diagnostic tool.

GETtheMANUALS.org

DF028 PRESENT	PASSENGER AIR BAG CONDITION INDICATOR LIGHT CIRCUIT 1.DEF : Fault finding performed by the instrument panel.

NOTES	**Special notes:** None.

Apply the fault finding procedure relevant to this fault in the instrument panel fault finding information section.

AFTER REPAIR	Clear the computer memory then switch off the ignition. Carry out the check again using the diagnostic tool and, if there are no faults, unlock the computer.

GETtheMANUALS.org

DF039 PRESENT	DRIVER'S SIDE SENSOR CIRCUIT CC.0 : Short circuit to earth 1.DEF : No dialogue 2.DEF : Dialogue disrupted 3.DEF : Faulty sensor

NOTES	**Special notes:** use the **75-track B53** adapter to work on the computer connector.

CC.0 / 1.DEF / 2.DEF	***NOTES***	None.

Lock the computer using the command on the diagnostic tool.
Check that the driver's side sensor is connected correctly and check its wiring.
Check the condition of the connections on the computer (**tracks 45** and **70**).
Check the condition of the **75-track** connector (locking system, wiring, etc)

Ensure continuity and insulation of the connections between:

Bornier B53 **terminal 70** ⟶ **track 1** sensor connector
Bornier B53 **terminal 45** ⟶ **track 2** sensor connector

3.DEF	***NOTES***	None

Replace the driver's side sensor.

AFTER REPAIR	Reconnect the computer and the driver's side sensor then switch on the ignition again. Clear the computer memory then switch off the ignition. Carry out the check again using the diagnostic tool and, if there are no faults, unlock the computer.

GETtheMANUALS.org

DF040 PRESENT	PASSENGER SIDE SENSOR CIRCUIT CC.0 : Short circuit to earth 1.DEF : No dialogue 2.DEF : Dialogue disrupted 3.DEF : Faulty sensor

NOTES	**Special notes:** use the **75-track B53** adapter to work on the computer connector.

CC.0 / 1.DEF / 2.DEF	***NOTES***	None

Lock the computer using the command on the diagnostic tool.
Check that the passenger side sensor is connected correctly and check its wiring.
Check the condition of the connections on the computer (**tracks 46** and **71**).
Check the condition of the **75-track** connector (locking system, wiring, etc)

Ensure continuity and insulation of the connections between:

Bornier B53 **terminal 71** → **track 1** sensor connector
Bornier B53 **terminal 46** → **track 2** sensor connector

3.DEF	***NOTES***	None.

Replace the passenger side sensor.

AFTER REPAIR	Reconnect the computer and the passenger side sensor then switch on the ignition again. Clear the computer memory then switch off the ignition. Carry out the check again using the diagnostic tool and, if there are no faults, unlock the computer.

GETtheMANUALS.org

DF060 PRESENT	MULTIPLEX NETWORK.

NOTES	None

Apply the fault finding procedure for the multiplex network.

AFTER REPAIR	Clear the computer memory then switch off the ignition. Check again using the diagnostic tool.

GETtheMANUALS.org

DF061 **PRESENT**	PASSENGER SEAT BELT PRETENSIONER CIRCUIT CC : Short circuit CO : Open circuit CC.1 : Short circuit to 12 volts CC.0 : Open circuit to earth

NOTES	**Special notes:** never carry out measuring operations on ignition lines using any tool other than CLIP, NXR or XRBAG. Use the **75-track B53** adapter to work on the computer connector.

CO - CC	***NOTES***	None.

Lock the computer. Switch off the ignition and check that the ignition module of the passenger seat belt pretensioner is correctly connected.
Disconnect the ignition module of the passenger seat belt pretensioner and connect a dummy ignition module to the ignition module connector. Switch on the ignition and carry out a check using the diagnostic tool. Replace the passenger seat belt pretensioner if the fault is stored (the fault is no longer declared present).
Disconnect the computer connector and fit the **75-track B53** adapter. The CLIP, NXR or XRBAG tool must be used to measure resistance on the adapter **cable marked L**. If the value obtained is correct, check the wiring on the **75-track (tracks 29 and 54)** connector.
Remove the passenger seat and check the connections on the **28-track** connector under the seat (**tracks 14 and 28**). Repair if necessary. Fit the **28-track** control adapter to the seat (**tracks 14 and 28**). The CLIP, NXR or XRBAG tool must be used for measuring the resistance on **cable C**. If the value obtained is incorrect, the wiring is faulty between the **28-track** connector and the passenger seat belt pretensioner (C1 and C3). Replace the wiring if necessary.
If the fault persists, the wiring is faulty between the **75-track** computer connector and the passenger seat (C0 and C1).

AFTER REPAIR	Reconnect the computer and the pretensioner ignition module, then switch on the ignition again. Clear the computer memory then switch off the ignition. Carry out the check again using the diagnostic tool and, if there are no faults, unlock the computer. Destroy the pretensioner if it has been replaced (tool **Elé. 1287**).

GETtheMANUALS.org

DF061 **PRESENT** **CONTINUED**	

CC.1 - CC.0	***NOTES***	None.

Lock the computer.
Disconnect the passenger pretensioner ignition module and connect a dummy ignition module to the ignition module connector.
Switch on the ignition and carry out a check using the diagnostic tool.
If the fault becomes stored (fault no longer declared present), check the condition of the seat wiring.
Replace the passenger seat belt pretensioner if the wiring is not faulty.

Disconnect the computer connector and fit the **75-track B53** adapter.
The Clip, NXR or XRBAG tools must be used for measuring the insulation corresponding to the type of fault on the **cables marked** L on the adapter.

If the value obtained is correct, check the connections on the **75-track connector (tracks 29 and 54)**.

Remove the passenger seat and check the connections on the **28-track** connector under the seat (**tracks 14 and 28**). Repair if necessary.
Fit the **28-track** control adapter to the seat.
The CLIP, NXR or XRBAG tool must be used for measuring the insulation corresponding to the type of fault on **cable C.**
If the value obtained is incorrect, the wiring is faulty between the **28-track** connector and the passenger seat belt pretensioner (C1 and C3). Replace the wiring if necessary.

If the fault persists, the wiring is faulty between the **75-track** computer connector and the passenger seat (C0 and C1).

AFTER REPAIR	Reconnect the computer and the pretensioner ignition module, then switch on the ignition again. Clear the computer memory then switch off the ignition. Carry out the check again using the diagnostic tool and, if there are no faults, unlock the computer. Destroy the pretensioner if it has been replaced (tool **Elé. 1287**).

GETtheMANUALS.org

DF062 **PRESENT**	CONFIGURATION OF THE SIDE SENSORS.

NOTES	None.

This fault indicates an inconsistency between the computer configuration and the vehicle equipment detected by the computer. The computer has detected the presence of an element additional to its configuration.

Modify the computer configuration using the command:

NXR: System components configuration.
CLIP AND OPTIMA: Side sensors configuration.

AFTER REPAIR	Clear the computer memory then switch off the ignition. Check again using the diagnostic tool.

GETtheMANUALS.org

DF064 PRESENT	PASSENGER SEAT POSITION SENSOR CIRCUIT. CO : Open circuit CC.0 : Short circuit to earth CC.1 : Short circuit to **12 volts** 1.DEF : Configuration 2.DEF : Faulty sensor.

NOTES	**Special notes:** use the **75-track B53** adapter to work on the computer connector.

CO - CC.0 - CC.1	***NOTES***	None.

Lock the computer using the command on the diagnostic tool.

Fit the **75-track B53** control adapter and measure the resistance between the **bornier earth and-track 57**, with the seat in the fully forward and fully back positions.

In the fully forward position, the resistance is approximately: **400 ohms**
In the fully back position, the resistance is approximately: **100 ohms**

If the resistances are correct, check the wiring on the **75-track** computer connector.

Remove the passenger seat and check the wiring on the **28-track** connector under the seat.
Repair if necessary.

Fit the **28-track** control adapter on the seat and measure the resistance between tracks **9** and **23** with the seat in the fully forward and fully back positions.

In the fully forward position, the resistance is approximately: **400 ohms**
In the fully back position, the resistance is approximately: **100 ohms**

Are the values correct?

NO

Check the connection and the condition of the sensor connections.

Check and ensure the continuity and insulation of the connections between:

Bornier **Track 9** ⟶ **Sensor connector**
Bornier **Track 23** ⟶ **Sensor connector**

If the checks are correct, replace the seat position sensor.

YES

Check the connections again on the seat connector (**tracks 23** and **9**) as well as on the **75-track** connector (**tracks 31** and **57**).

If the fault persists, the wiring is faulty between the computer and the driver's seat (C0/C1).
Replace the wiring if necessary.

AFTER REPAIR	Reconnect the computer and the seat position sensor then switch on the ignition. Clear the computer memory then switch off the ignition. Carry out the check again using the diagnostic tool and, if there are no faults, unlock the computer.

GETtheMANUALS.org

DF064 PRESENT **CONTINUED**	

1.DEF	***NOTES***	None

This fault indicates an inconsistency between the computer configuration and the vehicle equipment detected by the computer. The computer detects the presence of a non-configured component or an incorrect configuration.

Modify the computer configuration using the **Configuration of system components** command.

2.DEF	***NOTES***	None.

Replace the passenger seat position sensor.

AFTER REPAIR	Reconnect the computer, the seat position sensor, refit the seat then switch on the ignition. Clear the computer memory then switch off the ignition. Carry out the check again using the diagnostic tool and, if there are no faults, unlock the computer.

GETtheMANUALS.org

DF065 PRESENT	DRIVER'S SEAT POSITION SENSOR CIRCUIT. CO : Open circuit CC.0 : Short circuit to earth CC.1 : Short circuit to **12 volts** 1.DEF : Configuration 2.DEF : Faulty sensor.

NOTES	**Special notes:** use the **75-track B53** adapter to work on the computer connector.

CO - CC.0 - CC.1	***NOTES***	None.

Lock the computer using the command on the diagnostic tool.

Fit the **75-track B53** control adapter and measure the resistance between the **bornier earth and track 56**, with the seat in the fully forward and fully back positions.

In the fully forward position, the resistance is approximately: **400 ohms**
In the fully back position, the resistance is approximately: **100 ohms**

If the resistances are correct, check the wiring on the **75-track** computer connector.

Remove the driver's seat and check the wiring on the **28-track** connector under the seat.
Repair if necessary.

Fit the **28-track** control adapter on the seat and measure the resistance between tracks **9** and **23** with the seat in the fully forward and fully back positions.

In the fully forward position, the resistance is approximately: **400 ohms**
In the fully back position, the resistance is approximately: **100 ohms**

Are the values correct?

NO	Check the connection and the condition of the sensor connections. Check and ensure the continuity and insulation of the connections between: Bornier **Track 9** ⟶ **Sensor connector** Bornier **Track 23** ⟶ **Sensor connector** If the checks are correct, replace the seat position sensor.
YES	Check the wiring again on the seat connector (**tracks 23** and **9**) as well as on the **75-track** connector (**tracks 31** and **56**). If the fault persists, the wiring is faulty between the computer and the driver's seat (C0/C1). Replace the wiring if necessary.

AFTER REPAIR	Reconnect the computer and the seat position sensor then switch on the ignition. Clear the computer memory then switch off the ignition. Carry out the check again using the diagnostic tool and, if there are no faults, unlock the computer.

GETtheMANUALS.org

DF065 PRESENT **CONTINUED**	

1.DEF	***NOTES***	None

This fault indicates an inconsistency between the computer configuration and the vehicle equipment detected by the computer. The computer detects the presence of a non-configured component or an incorrect configuration.

Modify the computer configuration using the **Configuration of system components** command.

2.DEF	***NOTES***	None.

Replace the driver's seat position sensor.

AFTER REPAIR	Reconnect the computer, the seat position sensor, refit the seat then switch on the ignition. Clear the computer memory then switch off the ignition. Carry out the check again using the diagnostic tool and, if there are no faults, unlock the computer.

GETtheMANUALS.org

DF066 **PRESENT**	PASSENGER CHEST REAR SIDE AIR BAG CIRCUIT CC : Short circuit CO : Open circuit CC.1 : Short circuit to **12 volts** CC.0 : Short circuit to earth

NOTES	**Special notes:** never carry out measuring operations on ignition lines using any tool other than CLIP, NXR or XRBAG. use the **75-track B53** adapter to work on the computer connector.

CO - CC	***NOTES***	**Special notes:** correct the trigger line configuration if the vehicle is not fitted with rear side air bags.

Lock the computer.
Switch off the ignition and check that the ignition module of the passenger rear side air bag is correctly connected.

Disconnect the ignition module from the passenger rear side air bag and connect a dummy ignition module to the ignition module connector.

Switch on the ignition and carry out a check using the diagnostic tool.

Replace the passenger rear side air bag if the fault becomes stored (fault no longer declared present).

Check the wiring on the **75-track** computer connector.

Fit the **75-track B53** control adapter. CLIP, NXR or XRBAG must be used for measuring the resistance on **cable X.**

If the value obtained is correct, check the computer wiring (**tracks 50** and **75**).

If the value obtained is incorrect, the wiring is faulty between the computer and the rear side air bag module (C0/C3). Replace the wiring if necessary.

AFTER REPAIR	Reconnect the computer and the ignition module of the passenger rear side air bag module then switch on the ignition. Clear the computer memory then switch off the ignition. Carry out the check again using the diagnostic tool and, if there are no faults, unlock the computer. Destroy the passenger's rear side air bag module if it has been replaced (tool **Elé. 1287**).

GETtheMANUALS.org

DF066 PRESENT **CONTINUED**	

CC.1 - CC.0	***NOTES***	None.

Lock the computer.
Disconnect the ignition module from the passenger rear side air bag and connect a dummy ignition module to the ignition module connector.
Switch on the ignition and carry out a check using the diagnostic tool.
Replace the passenger rear side air bag if the fault becomes stored (fault no longer declared as present).

Check the wiring on the **75-track** computer connector.

Fit the **75-track B53** control adapter. The CLIP, NXR or XRBAG tool must be used for the insulation measurement corresponding to the type of fault, on **cable X.**

If the value obtained is correct, check the computer wiring (**tracks 50** and **75**).

If the value obtained is incorrect, the wiring is faulty between the computer and the rear side air bag module (C0/C3). Replace the wiring if necessary.

AFTER REPAIR	Reconnect the computer and the ignition module of the passenger rear side air bag module then switch on the ignition. Clear the computer memory then switch off the ignition. Carry out the check again using the diagnostic tool and, if there are no faults, unlock the computer. Destroy the passenger rear side air bag module if it has been replaced (tool **Elé. 1287**).

GETtheMANUALS.org

DF067 **PRESENT**	DRIVER'S CHEST REAR SIDE AIR BAG CIRCUIT. CC : Short circuit CO : Open circuit CC.1 : Short circuit to **12 volts** CC.0 : Short circuit to earth

NOTES	**Special notes:** never carry out measuring operations on ignition lines using any tool other than CLIP, NXR or XRBAG. Use the **75-track B53** adapter to work on the computer connector.

CO - CC	***NOTES***	**Special notes:** correct the trigger line configuration if the vehicle is not fitted with rear side air bags.

Lock the computer.
Switch off the ignition and check that the ignition module of the driver's rear side air bag is correctly connected.

Disconnect the ignition module from the driver's rear side air bag and connect a dummy ignition module to the ignition module connector.

Switch on the ignition and carry out a check using the diagnostic tool.

Replace the driver's rear side air bag if the fault becomes stored (fault no longer declared present).

Check the wiring on the **75-track** computer connector.

Fit the **75-track B53** control adapter. The CLIP, NXR or XRBAG tool must be used for measuring the resistance on **cable W.**

If the value obtained is correct, check the computer wiring (**tracks 49** and **74**).

If the value obtained is incorrect, the wiring is faulty between the computer and the rear side air bag module (C0/C3). Replace the wiring if necessary.

AFTER REPAIR	Reconnect the computer and the ignition module of the driver's rear side air bag module then switch on the ignition. Clear the computer memory then switch off the ignition. Carry out the check again using the diagnostic tool and, if there are no faults, unlock the computer. Destroy the driver's rear side air bag module if it has been replaced (tool **Elé. 1287**).

GETtheMANUALS.org

DF067 PRESENT **CONTINUED**	

CC.1 - CC.0	***NOTES***	None.

Lock the computer.
Disconnect the ignition module from the driver's rear side air bag and connect a dummy ignition module to the ignition module connector.
Switch on the ignition and carry out a check using the diagnostic tool.
Replace the driver's rear side air bag if the fault becomes stored (fault no longer declared present).

Check the wiring on the **75-track** computer connector.

Fit the **75-track B53** control adapter. The CLIP, NXR or XRBAG tool must be used for the insulation measurement corresponding to the type of fault, on **cable W.**

If the value obtained is correct, check the computer wiring (**tracks 49** and **74**).

If the value obtained is incorrect, the wiring is faulty between the computer and the rear side air bag module (C0/C3). Replace the wiring if necessary.

AFTER REPAIR	Reconnect the computer and the ignition module of the driver's rear side air bag module then switch on the ignition. Clear the computer memory then switch off the ignition. Carry out the check again using the diagnostic tool and, if there are no faults, unlock the computer. Destroy the driver's rear side air bag module if it has been replaced (tool **Elé. 1287**).

GETtheMANUALS.org

DF068 **PRESENT**	PASSENGER CHEST FRONT SIDE AIR BAG CIRCUIT CC : Short circuit CO : Open circuit CC.1 : Short circuit to **12 volts** CC.0 : Short circuit to earth

NOTES	**Special notes:** never carry out measuring operations on ignition lines using any tool other than CLIP, NXR or XRBAG. Use the **75-track B53** adapter to work on the computer connector and the **28-track** adapter to work on the seat.

CO - CC	***NOTES***	None.

Lock the computer, disconnect the computer connector and fit the **75-track B53** adapter. The CLIP, NXR or XRBAG tool must be used for checking resistance on the **cable marked R** on the adapter.

If the value obtained is correct, check the wiring on the **75-track** connector (**tracks 42** and **67**).

Remove the passenger's seat and check the wiring on the **28-track** connector under the seat. Repair if necessary. Fit the **28-track** control adapter on the seat (point C1).
CLIP, NXR or XRBAG must be used for measuring the resistance on **cable B**.

Is the value obtained correct?

NO	Check the connections on the seat connector (**tracks 7** and **21**). Remove the trim from the passenger seat and check that the side air bag ignition module is connected correctly.
	Disconnect the ignition module from the side air bag module, connect a dummy ignition module to the ignition module connector and measure the resistance again on **cable B**. – If the value obtained is correct, replace the passenger's front side air bag module. – If the value obtained is still incorrect, replace the wiring between points C1 and C3 (seat wiring).
YES	Check the connections again on the seat connector (**tracks 7** and **21**) as well as on the **75-track** connector (**tracks 42** and **67**).
	If the fault persists, the wiring is faulty between the computer and the passenger's seat (C0/C1). Replace the wiring if necessary.

AFTER REPAIR	Reconnect the computer and the ignition module of the passenger's front side air bag module then switch on the ignition. Clear the computer memory then switch off the ignition. Carry out the check again using the diagnostic tool and, if there are no faults, unlock the computer. Destroy the side air bag module if it has been replaced (tool **Elé. 1287**).

GETtheMANUALS.org

DF068 PRESENT **CONTINUED**	

CC.1 - CC.0	***NOTES***	None.

Lock the computer, disconnect the computer connector and fit the **75-track B53** adapter. The CLIP, NXR or XRBAG tools must be used for measuring the insulation corresponding to the type of fault on the **cable marked R** on the adapter.

If the value obtained is correct, check the wiring on the **75-track** connector (**tracks 42** and **67**).

Remove the passenger's seat and check the wiring on the **28-track** connector under the seat. Repair if necessary. Fit the **28-track** control adapter on the seat (point C1).
The CLIP, NXR or XRBAG tool MUST be used for correctly measuring the insulation for the type of fault on **cable B.**
Is the value obtained correct?

NO

Check the connections on the seat connector (**tracks 7** and **21**).

Remove the trim from the passenger seat and check that the side air bag ignition module is connected correctly.

Disconnect the side air bag ignition module, connect a dummy ignition module to the ignition module connector and check again the corresponding insulation measurement for the type of fault, on **cable B**.

– If the value obtained is correct, replace the passenger's front side air bag module.

– If the value obtained is still incorrect, replace the wiring between points C1 and C3 (seat wiring).

YES

Check the connections again on the seat connector (**tracks 7** and **21**) as well as on the **75-track** connector (**tracks 42** and **67**).

If the fault persists, the wiring is faulty between the computer and the passenger's seat (C0/C1).
Replace the wiring if necessary.

AFTER REPAIR	Reconnect the computer and the ignition module of the passenger's front side air bag module then switch on the ignition. Clear the computer memory then switch off the ignition. Carry out the check again using the diagnostic tool and, if there are no faults, unlock the computer. Destroy the side air bag module if it has been replaced (tool **Elé. 1287**).

GETtheMANUALS.org

DF069 PRESENT	PASSENGER CURTAIN AIR BAG CIRCUIT CC : Short circuit CO : Open circuit CC.1 : Short circuit to **12 volts** CC.0 : Short circuit to earth

NOTES	**Special notes:** never carry out measuring operations on ignition lines using any tool other than CLIP, NXR or XRBAG. Use the **75-track B53** adapter to work on the computer connector. On right-hand drive vehicles, take the measurement on **cable A**, corresponding to **tracks 1** and **2** of the **6-track** connector.

CO - CC	***NOTES***	None.

Lock the computer.
Switch off the ignition and check that the ignition module of the passenger side curtain air bag is connected correctly (located behind the mounting bracket of the rear parcel shelf).

Disconnect the ignition module from the passenger side curtain air bag and connect a dummy ignition module to the ignition module connector.
Switch on the ignition and carry out a check using the diagnostic tool.
Replace the passenger side curtain air bag if the fault becomes stored (fault no longer declared present).

Remove the trim from the rear left-hand sill panel and check the wiring on the yellow **6- track** connector on the sill panel in the rear position (**tracks 5** and **6**). Repair if necessary.

Fit the **6-track** control adapter on the air bag wiring (point C1).
The CLIP, NXR or XRBAG tool MUST be used for measuring the resistance on **cable B**.
If the value obtained is incorrect, the wiring is faulty between the 6-track connector and the curtain air bag (C1/C3). Replace the wiring if necessary.

Check the wiring again on the **6-track** intermediate connector (**tracks 5** and **6**) as well as the wiring of the **75-track** connector (**tracks 44** and **69**).

If the fault persists, the wiring is faulty between the computer and the **6-track** intermediate connector (C0/C1). Replace the wiring if necessary.

AFTER REPAIR	Reconnect the computer and the ignition module of the passenger side curtain air bag module then switch the ignition back on. Clear the computer memory then switch off the ignition. Carry out the check again using the diagnostic tool and, if there are no faults, unlock the computer. Destroy the passenger side curtain air bag module if it has been replaced (tool **Elé. 1287**).

GETtheMANUALS.org

DF069 PRESENT **CONTINUED**	

CC.1 - CC.0	***NOTES***	None.

Lock the computer.
Switch off the ignition and check that the ignition module of the passenger side curtain air bag is connected correctly (located behind the mounting bracket of the rear parcel shelf).

Disconnect the ignition module from the passenger side curtain air bag and connect a dummy ignition module to the ignition module connector.
Switch on the ignition and carry out a check using the diagnostic tool.
Replace the passenger side curtain air bag if the fault becomes stored (fault no longer declared present).

Remove the trim from the rear left-hand sill panel and check the wiring on the yellow **6- track** connector on the sill panel in the rear position (**tracks 5** and **6**). Repair if necessary.

Fit the **6-track** control adapter on the air bag wiring (point C1).
CLIP, NXR or XRBAG must be used for measuring the insulation corresponding to the type of fault on **cable B.**
If the value obtained is incorrect, the wiring is faulty between the **6-track** connector and the curtain air bag (C1/C3). Replace the wiring if necessary.

Check the wiring again on the **6-track** intermediate connector (**tracks 5** and **6**) as well as the wiring of the **75-track** connector (**tracks 44** and **69**).

If the fault persists, the wiring is faulty between the computer and the **6-track** intermediate connector (C0/C1). Replace the wiring if necessary.

AFTER REPAIR	Reconnect the computer and the ignition module of the passenger side curtain air bag module then switch the ignition back on. Clear the computer memory then switch off the ignition. Carry out the check again using the diagnostic tool and, if there are no faults, unlock the computer. Destroy the passenger side curtain air bag module if it has been replaced (tool **Elé. 1287**).

GETtheMANUALS.org

DF070 **PRESENT**	DRIVER'S CURTAIN AIR BAG CIRCUIT. CC : Short circuit CO : Open circuit CC.1 : Short circuit to **12 volts** CC.0 : Short circuit to earth

NOTES	**Special notes:** Never carry out measuring operations on ignition lines using any tool other than CLIP, NXR or XRBAG. Use the **75-track B53** adapter to work on the computer connector. On right-hand drive vehicles, take the measurement on **cable B**, corresponding to **tracks 5** and **6** of the **6-track** connector.

CO - CC	***NOTES***	None.

Lock the computer.
Switch off the ignition and check that the ignition module of the driver's side curtain air bag is connected correctly (located behind the mounting bracket of the rear parcel shelf).

Disconnect the ignition module from the driver's side curtain air bag and connect a dummy ignition module to the ignition module connector.
Switch on the ignition and carry out a check using the diagnostic tool.
Replace the driver's side curtain air bag if the fault becomes stored (fault no longer declared present).

Remove the trim from the rear left-hand sill panel and check the wiring on the yellow **6-track** connector on the sill panel in the rear position (**tracks 1** and **2**). Repair if necessary.

Fit the **6-track** control adapter on the air bag wiring (point C1).
The CLIP, NXR or XRBAG tool MUST be used for measuring the resistance on **cable A**.
If the value obtained is incorrect, the wiring is faulty between the **6-track** connector and the curtain air bag (C1/C3). Replace the wiring if necessary.

Check the wiring again on the **6-track** intermediate connector (**tracks 1** and **2**) as well as the wiring of the **75-track** connector (**tracks 43** and **68**).

If the fault persists, the wiring is faulty between the computer and the **6-track** intermediate connector (C0/C1). Replace the wiring if necessary.

AFTER REPAIR	Reconnect the computer and the ignition module of the driver's side curtain air bag module then switch the ignition back on. Clear the computer memory then switch off the ignition. Carry out the check again using the diagnostic tool and, if there are no faults, unlock the computer. Destroy the driver's side curtain air bag module if it has been replaced (tool **Elé. 1287**).

GETtheMANUALS.org

DF070 PRESENT **CONTINUED**	

CC.1 - CC.0	***NOTES***	None.

Lock the computer.
Switch off the ignition and check that the ignition module of the driver's side curtain air bag is connected correctly (located behind the mounting bracket of the rear parcel shelf).

Disconnect the ignition module from the driver's side curtain air bag and connect a dummy ignition module to the ignition module connector.
Switch on the ignition and carry out a check using the diagnostic tool.
Replace the driver's side curtain air bag if the fault becomes stored (fault no longer declared present).

Remove the trim from the rear left-hand sill panel and check the wiring on the yellow **6-track** connector on the sill panel in the rear position (**tracks 1** and **2**). Repair if necessary.

Fit the **6-track** control adapter on the air bag wiring (point C1).
CLIP, NXR or XRBAG must be used for measuring the insulation corresponding to the type of fault on **cable A.**
If the value obtained is incorrect, the wiring is faulty between the **6-track** connector and the curtain air bag (C1/C3). Replace the wiring if necessary.

Check the wiring again on the **6-track** intermediate connector (**tracks 1** and **2**) as well as the wiring of the **75-track** connector (**tracks 43** and **68**).

If the fault persists, the wiring is faulty between the computer and the **6-track** intermediate connector (C0/C1). Replace the wiring if necessary.

AFTER REPAIR	Reconnect the computer and the ignition module of the driver's side curtain air bag module then switch the ignition back on. Clear the computer memory then switch off the ignition. Carry out the check again using the diagnostic tool and, if there are no faults, unlock the computer. Destroy the driver's side curtain air bag module if it has been replaced (tool **Elé. 1287**).

GETtheMANUALS.org

DF071 **PRESENT**	DRIVER'S FRONT AIR BAG CIRCUIT 2. CC : Short circuit CO : Open circuit CC.1 : Short circuit to **12 volts** CC.0 : Short circuit to earth

NOTES	**Special notes:** never carry out measuring operations on ignition lines using any tool other than CLIP, NXR or XRBAG. Use the **B53** adapter to work on the computer connector.

CO - CC	***NOTES***	None.

Lock the computer using the command on the diagnostic tool.
Switch off the ignition and remove the steering wheel air bag.
Check that it is correctly connected.

Disconnect the steering wheel air bag and connect two dummy ignition modules to the ignition module connectors.
Switch on the ignition and carry out a check using the diagnostic tool.
Replace the air bag if the fault has become stored (fault no longer declared present).

With the ignition switched off, disconnect and reconnect the connector of the rotary switch under the steering wheel.
Check the connection wiring if the fault has become stored (fault no longer declared present).

Fit the **10-track** control adapter to the rotary switch (point C2 **tracks 9** and **10**).
The CLIP, NXR or XRBAG tool must be used for measuring the resistance on **cable A**.
If the value obtained is incorrect, replace the rotary switch under the steering wheel.

Reconnect the rotary switch under the steering wheel, disconnect the computer and check the wiring on the connector (**tracks 36** and **61**).

Fit the **75-track B53** adapter.
CLIP, NXR or XRBAG must be used for measuring resistance on **cable N** of the adapter.

If the value obtained is incorrect, the wiring is faulty between the computer and the rotary switch connector (C0/C2). Replace the wiring if necessary.

AFTER REPAIR	Reconnect the computer and the ignition modules of the steering wheel air bag, then switch on the ignition. Clear the computer memory then switch off the ignition. Carry out the check again using the diagnostic tool and, if there are no faults, unlock the computer. Destroy the driver's front air bag module if it has been replaced (tool **Elé. 1287**).

GETtheMANUALS.org

DF071 PRESENT **CONTINUED**	

CC.1 - CC.0	***NOTES***	None.

Lock the computer using the command on the diagnostic tool.
Switch off the ignition and remove the steering wheel air bag.
Check the condition of the firing lines.

Fit the **10-track** control adapter to the rotary switch (point C2 **tracks 9** and **10**).
The CLIP, NXR or XRBAG tool MUST be used for correctly measuring the insulation for the type of fault on **cable A.**
If the value obtained is incorrect, replace the rotary switch under the steering wheel.

Reconnect the rotary switch under the steering wheel, disconnect the computer and check the wiring on the connector (**tracks 36** and **61**).

Fit the **75-track B53** adapter.
CLIP, NXR or XRBAG must be used for measuring the insulation corresponding to the type of fault on **cable N** of the adapter.

If the value obtained is incorrect, the wiring is faulty between the computer and the rotary switch connector (C0/C2). Replace the wiring if necessary.

AFTER REPAIR	Reconnect the computer and the ignition modules of the steering wheel air bag, then switch on the ignition. Clear the computer memory then switch off the ignition. Carry out the check again using the diagnostic tool and, if there are no faults, unlock the computer. Destroy the driver's front air bag module if it has been replaced (tool **Elé. 1287**).

GETtheMANUALS.org

DF072 **PRESENT**	DRIVER'S FRONT AIR BAG CIRCUIT 1 CC : Short circuit CO : Open circuit CC.1 : Short circuit to **12 volts** CC.0 : Short circuit to earth

NOTES	**Special notes:** never carry out measuring operations on ignition lines using any tool other than CLIP, NXR or XRBAG. Use the **B53** adapter to work on the computer connector.

CO - CC	***NOTES***	None.

Lock the computer using the command on the diagnostic tool. Switch off the ignition and remove the steering wheel air bag. Check that it is correctly connected.
Disconnect the steering wheel air bag and connect two dummy ignition modules to the ignition module connectors. Switch on the ignition and carry out a check using the diagnostic tool. Replace the air bag if the fault has become stored (fault no longer declared present).
With the ignition switched off, disconnect and reconnect the connector of the rotary switch under the steering wheel. Check the connection wiring if the fault has become stored (fault no longer declared present).
Fit the **10-track** control adapter to the rotary switch (point C2 **tracks 6** and **7**). The CLIP, NXR or XRBAG tool MUST be used for measuring the resistance on **cable B**. If the value obtained is incorrect, replace the rotary switch under the steering wheel.
Reconnect the rotary switch under the steering wheel, disconnect the computer and check the connector wiring (**tracks 35** and **60**). Fit the **75-track B53** adapter. CLIP, NXR or XRBAG must be used for measuring the resistance on **cable M** of the adapter. If the value obtained is incorrect, the wiring is faulty between the computer and the rotary switch connector (C0/C2). Replace the wiring if necessary.

AFTER REPAIR	Reconnect the computer and the ignition modules of the steering wheel air bag, then switch on the ignition. Clear the computer memory then switch off the ignition. Carry out the check again using the diagnostic tool and, if there are no faults, unlock the computer. Destroy the driver's front air bag module if it has been replaced (tool **Elé. 1287**).

GETtheMANUALS.org

DF072 **PRESENT** **CONTINUED**	

CC.1 - CC.0	***NOTES***	None.

Lock the computer using the command on the diagnostic tool.
Switch off the ignition and remove the steering wheel air bag.
Check the condition of the firing lines.

Fit the **10-track** control adapter to the rotary switch (point C2 **tracks 6** and **7**).
CLIP, NXR or XRBAG must be used for measuring the insulation corresponding to the type of fault on **cable B.**
If the value obtained is incorrect, replace the rotary switch under the steering wheel.

Reconnect the rotary switch under the steering wheel, disconnect the computer and check the connector wiring (**tracks 35** and **60**).

Fit the **75-track B53** adapter.
CLIP, NXR or XRBAG must be used for measuring the insulation corresponding to the type of fault on **cable M** of the adapter.

If the value obtained is incorrect, the wiring is faulty between the computer and the rotary switch connector (C0/C2). Replace the wiring if necessary.

AFTER REPAIR	Reconnect the computer and the ignition modules of the steering wheel air bag, then switch on the ignition. Clear the computer memory then switch off the ignition. Carry out the check again using the diagnostic tool and, if there are no faults, unlock the computer. Destroy the driver's front air bag module if it has been replaced (tool **Elé. 1287**).

GETtheMANUALS.org

DF073 PRESENT	PASSENGER SIDE BUCKLE PRETENSIONER CIRCUIT. CC : Short circuit CO : Open circuit CC.1 : Short circuit to **12 volts** CC.0 : Short circuit to earth

NOTES	**Special notes:** The buckle pretensioner of the passenger seat is wired in series with the rear seat belt inertia reel, passenger side. Never carry out measuring operations on ignition lines using any tool other than CLIP, NXR or XRBAG. Use the **75-track B53** adapter to work on the computer connector.

CO - CC	***NOTES***	None.

Lock the computer.
Switch off the ignition and check that the ignition module of the passenger's seat buckle pretensioner is correctly connected.
Disconnect the ignition module of the pretensioner and connect a dummy ignition module to the ignition module connector.
Switch on the ignition and carry out a check using the diagnostic tool.
Replace the passenger's seat buckle pretensioner if the fault becomes stored (fault no longer declared present).

Switch off the ignition and check that the ignition module of the rear seat belt inertia reel, passenger side is correctly connected.
Disconnect the ignition module of the inertia reel and connect a dummy ignition module to the ignition module connector.
Switch on the ignition and carry out a check using the diagnostic tool.
Replace the rear seat belt inertia reel, passenger side, if the fault becomes stored (fault no longer declared present).

Disconnect the computer and check the wiring on the connector (**tracks 4, 5, 27 and 52**).

Fit the **75-track B53** adapter.
CLIP, NXR or XRBAG must be used for checking the resistance on **cable F** of the adapter.
If the value obtained is incorrect, the wiring is faulty between the computer and the rear seat belt inertia reel, passenger side (C0/C3). Replace the wiring if necessary.

CLIP, NXR or XRBAG must be used for checking the resistance on **cable E** of the adapter.
If the value obtained is incorrect, the wiring is faulty between the computer and the passenger's seat buckle pretensioner (C0/C3).

See next page.

AFTER REPAIR	Reconnect the computer, the pretensioner and the inertia reel then switch on the ignition again. Clear the computer memory then switch off the ignition. Carry out the check again using the diagnostic tool and, if there are no faults, unlock the computer. Destroy the pretensioner or wind it up if it has been replaced (tool **Elé. 1287**).

GETtheMANUALS.org

DF073 PRESENT **CONTINUED 1**	

Remove the passenger's seat and check the wiring on the **28-track** connector under the seat (**tracks 8** and **22**). Repair if necessary. Fit the **28-track** control adapter on the seat (point C1).
The CLIP, NXR or XRBAG tool MUST be used for measuring the resistance on **cable A**.

Is the value obtained correct?

NO	Check the wiring again on the seat connector, seat side (**tracks 8** and **22**). If the fault persists, the wiring is faulty between the **28-track** seat connector and the passenger's seat buckle pretensioner (C1/C3).
YES	Check the wiring again on the seat connector (**tracks 8** and **22**), passenger compartment side as well as the wiring on the **75-track** connector (**tracks 4** and **27**).
	If the fault persists, the wiring is faulty between the computer and the passenger's seat (C0/C1). Replace the wiring if necessary.

CC.1 - CC.0	***NOTES***	None.

Disconnect the computer and check the wiring on the connector (**tracks 4**, **5**, **27** and **52**).

Fit the **75-track B53** adapter.
The CLIP, NXR or XRBAG tools must be used for measuring the insulation corresponding to the type of fault on **cable F** on the adapter.
If the value obtained is incorrect, the wiring is faulty between the computer and the rear seat belt inertia reel, passenger side (C0/C3). Replace the wiring if necessary.

The CLIP, NXR or XRBAG tools must be used for measuring the insulation corresponding to the type of fault on **cable E** on the adapter.
If the value obtained is incorrect, remove the passenger's seat and check the wiring on the **28-track** connector under the seat (**tracks 8** and **22**). Repair if necessary. Fit the **28-track** control adapter on the seat (point C1).
The CLIP, NXR or XRBAG tool MUST be used for measuring the insulation corresponding to the type of fault on **cable A.**

Is the value obtained correct?

See next page.

AFTER REPAIR	Reconnect the computer, the pretensioner and the inertia reel then switch on the ignition again. Clear the computer memory then switch off the ignition. Carry out the check again using the diagnostic tool and, if there are no faults, unlock the computer. Destroy the pretensioner or wind it up if it has been replaced (tool **Elé. 1287**).

GETtheMANUALS.org

DF073 PRESENT **CONTINUED 2**	

NO	Check the wiring again on the seat connector, seat side (**tracks 8** and **22**). If the fault persists, the wiring is faulty between the **28-track** seat connector and the passenger's seat buckle pretensioner (C1/C3).
YES	Check the wiring again on the seat connector (**tracks 8** and **22**), passenger compartment side as well as the wiring on the **75-track** connector (**tracks 4** and **27**).
	If the fault persists, the wiring is faulty between the computer and the passenger's seat (C0/C1). Replace the wiring if necessary.

AFTER REPAIR	Reconnect the computer, the pretensioner and the inertia reel then switch on the ignition again. Clear the computer memory then switch off the ignition. Carry out the check again using the diagnostic tool and, if there are no faults, unlock the computer. Destroy the pretensioner or wind it up if it has been replaced (tool **Elé. 1287**).

GETtheMANUALS.org

DF074 **PRESENT**	PASSENGER FRONT AIR BAG CIRCUIT 2. CC : Short circuit CO : Open circuit CC.1 : Short circuit to **12 volts** CC.0 : Short circuit to earth

NOTES	**Special notes:** never carry out measuring operations on ignition lines using any tool other than CLIP, NXR or XRBAG. Use the **B53** adapter to work on the computer connector.

CO - CC	***NOTES***	None.

Lock the computer using the command on the diagnostic tool.
Switch off the ignition and remove the glove box.
Check the connection and the condition of the **6-track** connector (**tracks 5** and **6**) behind the glove box.

Fit the **6-track** control adapter.
The CLIP, NXR or XRBAG tool MUST be used for measuring the resistance on **cable B**.
If the value obtained is incorrect, replace the passenger's air bag along with its harness (C2/C4).

If the value obtained is correct, reconnect the **6-track** connector, disconnect the computer and check the wiring on the connector (**tracks 38** and **63**).

Fit the **75-track B53** adapter.
CLIP, NXR or XRBAG must be used for measuring the resistance on **cable P** of the adapter.

If the value obtained is incorrect, the wiring is faulty between the computer and the **6-track** connector (C0/C2).
Replace the wiring if necessary.
If the value obtained is correct, check the computer wiring again.

AFTER REPAIR	Reconnect the computer and the **6-track** connector of the passenger's air bag module then switch on the ignition. Clear the computer memory then switch off the ignition. Carry out the check again using the diagnostic tool and, if there are no faults, unlock the computer. Destroy the passenger's front air bag module if it has been replaced (tool **Elé. 1287**).

GETtheMANUALS.org

DF074 **PRESENT** **CONTINUED**	

CC.1 - CC.0	***NOTES***	None.

Lock the computer using the command on the diagnostic tool.
Switch off the ignition and remove the glove box.
Check the connection and the condition of the **6-track** connector (**tracks 5** and **6**) behind the glove box.

Fit the **6-track** control adapter.
CLIP, NXR or XRBAG must be used for measuring the insulation corresponding to the type of fault on **cable B.**
If the value obtained is incorrect, replace the passenger's air bag along with its harness (C2/C4).

If the value obtained is correct, reconnect the **6-track** connector, disconnect the computer and check the wiring on the connector (**tracks 38** and **63**).

Fit the **75-track B53** adapter.
CLIP, NXR or XRBAG must be used for measuring the insulation corresponding to the type of fault on **cable P** of the adapter.

If the value obtained is incorrect, the wiring is faulty between the computer and the connector of the **6-track** connector (C0/C2).
Replace the wiring if necessary.

AFTER REPAIR	Reconnect the computer and the **6-track** connector of the passenger's air bag module then switch on the ignition. Clear the computer memory then switch off the ignition. Carry out the check again using the diagnostic tool and, if there are no faults, unlock the computer. Destroy the passenger's front air bag module if it has been replaced (tool **Elé. 1287**).

GETtheMANUALS.org

DF075 **PRESENT**	PASSENGER FRONT AIR BAG CIRCUIT 1 CC : Short circuit CO : Open circuit CC.1 : Short circuit to **12 volts** CC.0 : Short circuit to earth

NOTES	**Special notes:** Never carry out measuring operations on ignition lines using any tool other than CLIP, NXR or XRBAG. Use the **B53** adapter to work on the computer connector.

CO - CC	***NOTES***	None.

Lock the computer using the command on the diagnostic tool.
Switch off the ignition and remove the glove box.
Check the connection and the condition of the **6-track** connector (**tracks 1** and **2**) behind the glove box.

Fit the **6-track** control adapter.
The CLIP, NXR or XRBAG tool MUST be used for measuring the resistance on **cable A**.
If the value obtained is incorrect, replace the passenger's air bag along with its harness (C2/C4).

If the value obtained is correct, reconnect the **6-track** connector, disconnect the computer and check the wiring on the connector (**tracks 37** and **62**).

Fit the **75-track B53** adapter.
CLIP, NXR or XRBAG must be used for measuring the resistance on **cable O** of the adapter.

If the value obtained is incorrect, the wiring is faulty between the computer and the **6-track** connector (C0/C2).
Replace the wiring if necessary.

AFTER REPAIR	Reconnect the computer and the **6-track** connector of the passenger's air bag module then switch on the ignition. Clear the computer memory then switch off the ignition. Carry out the check again using the diagnostic tool and, if there are no faults, unlock the computer. Destroy the passenger's front air bag module if it has been replaced (tool **Elé. 1287**).

GETtheMANUALS.org

DF075 PRESENT **CONTINUED**	

CC.1 - CC.0	***NOTES***	None.

Lock the computer using the command on the diagnostic tool.
Switch off the ignition and remove the glove box.
Check the connection and the condition of the **6-track** connector (C2) behind the glove box.

Fit the **6-track** control adapter (point C2 **tracks 1** and **2**).
The CLIP, NXR or XRBAG tool MUST be used for measuring the insulation corresponding to the type of fault on **cable A.**
If the value obtained is incorrect, replace the passenger's air bag along with its harness (C2, C4).

If the value obtained is correct, reconnect the **6-track** connector, disconnect the computer and check the wiring on the connector (**tracks 32** and **67**).

Fit the **75-track B53** adapter.
CLIP, NXR or XRBAG must be used for measuring the insulation corresponding to the type of fault on **cable O** of the adapter.

If the value obtained is incorrect, the wiring is faulty between the computer and the **6-track** connector (C0/C2). Replace the wiring if necessary.

AFTER REPAIR	Reconnect the computer and the **6-track** connector of the passenger's air bag module then switch on the ignition. Clear the computer memory then switch off the ignition. Carry out the check again using the diagnostic tool and, if there are no faults, unlock the computer. Destroy the passenger's front air bag module if it has been replaced (tool **Elé. 1287**).

GETtheMANUALS.org

DF076 PRESENT	DRIVER'S SIDE BUCKLE PRETENSIONER CIRCUIT. CC : Short circuit CO : Open circuit CC.1 : Short circuit to **12 volts** CC.0 : Short circuit to earth

NOTES	**Special notes:** the buckle pretensioner of the driver's seat is wired in series with the rear seat belt inertia reel, driver's side. Never carry out measuring operations on ignition lines using any tool other than CLIP, NXR or XRBAG. Use the **75-track B53** adapter to work on the computer connector.

CO - CC	***NOTES***	None.

Lock the computer.
Switch off the ignition and check that the ignition module of the driver's seat buckle pretensioner is correctly connected.
Disconnect the ignition module of the pretensioner and connect a dummy ignition module to the ignition module connector.
Switch on the ignition and carry out a check using the diagnostic tool.
Replace the driver's seat buckle pretensioner if the fault becomes stored (fault no longer declared present).

Switch off the ignition and check that the ignition module of the rear seat belt inertia reel, driver's side is correctly connected.
Disconnect the ignition module of the inertia reel and connect a dummy ignition module to the ignition module connector.
Switch on the ignition and carry out a check using the diagnostic tool.
Replace the rear seat belt inertia reel, driver's side, if the fault becomes stored (fault no longer declared present).

Reconnect the pretensioner and the inertia reel.
Disconnect the computer and check the wiring on the connector (**tracks 2**, **3**, **26** and **51**).

Fit the **75-track B53** adapter.
The CLIP, NXR or XRBAG tool MUST be used for checking the resistance on **cable C** of the adapter.
If the value obtained is incorrect, the wiring is faulty between the computer and the rear seat belt inertia reel, driver's side (C0/C3). Replace the wiring if necessary.

The CLIP, NXR or XRBAG tool MUST be used for measuring the resistance on **cable B** of the adapter.
If the value obtained is incorrect, the wiring is faulty between the computer and the driver's seat buckle pretensioner (C0/C3).

See next page.

AFTER REPAIR	Reconnect the computer, the pretensioner and the inertia reel then switch on the ignition again. Clear the computer memory then switch off the ignition. Carry out the check again using the diagnostic tool and, if there are no faults, unlock the computer. Destroy the pretensioner or wind it up if it has been replaced (tool **Elé. 1287**).

GETtheMANUALS.org

DF076 PRESENT **CONTINUED 1**	

Remove the passenger's seat and check the wiring on the **28-track** connector under the seat (**tracks 8** and **22**). Repair if necessary. Fit the **28-track** control adapter on the seat (point C1).
The CLIP, NXR or XRBAG tool MUST be used for measuring the resistance on **cable A**.

Is the value obtained correct?

NO	Check the wiring again on the seat connector, seat side (**tracks 8** and **22**). If the fault persists, the wiring is faulty between the **28-track** seat connector and the driver's seat buckle pretensioner (C1/C3).
YES	Check the wiring again on the seat connector (**tracks 8** and **22**), passenger compartment side as well as the wiring on the **75-track** connector (**tracks 2** and **26**). If the fault persists, the wiring is faulty between the computer and the driver's seat (C0/C1). Replace the wiring if necessary.

CC.1 - CC.0	***NOTES***	None.

Disconnect the computer and check the wiring on the connector (**tracks 2, 3, 26 and 51**).

Fit the **75-track B53** adapter.
The CLIP, NXR or XRBAG tool MUST be used for correctly measuring the insulation for the type of fault on **cable C** of the adapter.
If the value obtained is incorrect, the wiring is faulty between the computer and the rear seat belt inertia reel, driver's side (C0/C3). Replace the wiring if necessary.

The CLIP, NXR or XRBAG tool MUST be used for correctly measuring the insulation for the type of fault on **cable B** of the adapter.
If the value obtained is incorrect, remove the driver's seat and check the wiring on the 28-track connector under the seat (**tracks 8 and 22**). Repair if necessary. Fit the 28-track control adapter on the seat (point C1).
The CLIP, NXR or XRBAG tool MUST be used for correctly measuring the insulation for the type of fault on **cable A.**

Is the value obtained correct?

See next page.

AFTER REPAIR	Reconnect the computer, the pretensioner and the inertia reel then switch on the ignition again. Clear the computer memory then switch off the ignition. Carry out the check again using the diagnostic tool and, if there are no faults, unlock the computer. Destroy the pretensioner or wind it up if it has been replaced (tool **Elé. 1287**).

GETtheMANUALS.org

DF076 PRESENT **CONTINUED 2**	

NO	Check the wiring again on the seat connector, seat side (**tracks 8** and **22**). If the fault persists, the wiring is faulty between the **28-track** seat connector and the driver's seat buckle pretensioner (C1/C3).
YES	Check the wiring again on the seat connector (**tracks 8** and **22**), passenger compartment side as well as the wiring on the **75-track** connector (**tracks 2** and **26**).
	If the fault persists, the wiring is faulty between the computer and the driver's seat (C0/C1). Replace the wiring if necessary.

AFTER REPAIR	Reconnect the computer, the pretensioner and the inertia reel then switch on the ignition again. Clear the computer memory then switch off the ignition. Carry out the check again using the diagnostic tool and, if there are no faults, unlock the computer. Destroy the pretensioner or wind it up if it has been replaced (tool **Elé. 1287**).

GETtheMANUALS.org

DF077 PRESENT	DRIVER CHEST FRONT SIDE AIR BAG CIRCUIT CC : Short circuit CO : Open circuit CC.1 : Short circuit to **12 volts** CC.0 : Short circuit to earth

NOTES	**Special notes:** Never carry out measuring operations on ignition lines using any tool other than CLIP, NXR or XRBAG. Use the **75-track B53** adapter to work on the computer connector.

CO - CC	***NOTES***	None.

Lock the computer, disconnect the computer connector and fit the **75-track B53** adapter. The CLIP, NXR or XRBAG tool MUST be used for measuring resistance on the **cable marked Q** on the adapter.

If the value obtained is correct, check the wiring on the **75-track** connector (**tracks 41** and **66**).

Remove the driver's seat and check the wiring on the **28-track** connector under the seat.
Repair if necessary. Fit the **28-track** control adapter on the seat (point C1).
CLIP, NXR or XRBAG must be used for measuring the resistance on **cable B**.

Is the value obtained correct?

NO

Check the connections on the seat connector (**tracks 7** and **21**).

Remove the trim from the driver's seat and check that the side air bag ignition module is correctly connected.

Disconnect the ignition module from the side air bag module, connect a dummy ignition module to the ignition module connector and measure the resistance again on **cable B**.
- If the value obtained is correct, replace the driver's side air bag module.
- If the value obtained is still incorrect, replace the wiring between points C1 and C3 (seat wiring).

YES

Check the connections again on the seat connector (**tracks 7** and **21**) as well as on the **75-track** connector (**tracks 41** and **66**).

If the fault persists, the wiring is faulty between the computer and the driver's seat (C0/C1).
Replace the wiring if necessary.

AFTER REPAIR	Reconnect the computer and the ignition module of the driver's side air bag module then switch on the ignition. Clear the computer memory then switch off the ignition. Carry out the check again using the diagnostic tool and, if there are no faults, unlock the computer. Destroy the side air bag module if it has been replaced (tool **Elé. 1287**).

GETtheMANUALS.org

DF077 PRESENT **CONTINUED**	

CC.1 - CC.0	***NOTES***	None.

Lock the computer, disconnect the computer connector and fit the **75-track B53** adapter. The CLIP, NXR or XRBAG tools must be used for measuring the insulation corresponding to the type of fault on the **cable marked Q** on the adapter.

If the value obtained is correct, check the wiring on the **75-track** connector (**tracks 41** and **66**).

Remove the driver's seat and check the wiring on the **28-track** connector under the seat.
Repair if necessary. Fit the **28-track** control adapter on the seat (point C1).
The CLIP, NXR or XRBAG tool MUST be used for correctly measuring the insulation for the type of fault on **cable B.**
Is the value obtained correct?

NO

Check the connections on the seat connector (**tracks 7** and **21**).

Remove the trim from the driver's seat and check that the side air bag ignition module is correctly connected.

Disconnect the side air bag ignition module, connect a dummy ignition module to the ignition module connector and check again the corresponding insulation measurement for the type of fault, on **cable B**.
– If the value obtained is correct, replace the driver's side air bag module.
– If the value obtained is still incorrect, replace the wiring between points C1 and C3 (seat wiring).

YES

Check the connections again on the seat connector (**tracks 7** and **21**) as well as on the **75-track** connector (**tracks 41** and **66**).

If the fault persists, the wiring is faulty between the computer and the driver's seat (C0/C1).
Replace the wiring if necessary.

AFTER REPAIR	Reconnect the computer and the ignition module of the driver's side air bag module then switch on the ignition. Clear the computer memory then switch off the ignition. Carry out the check again using the diagnostic tool and, if there are no faults, unlock the computer. Destroy the side air bag module if it has been replaced (tool **Elé. 1287**).

GETtheMANUALS.org

DF080 **PRESENT**	DRIVER'S SEAT BELT PRETENSIONER CIRCUIT. CC : Short circuit CO : Open circuit CC.1 : Short circuit to **12 volts** CC.0 : Short circuit to earth

NOTES	**Special notes:** Never carry out measuring operations on ignition lines using any tool other than CLIP, NXR or XRBAG. Use the **75-track B53** adapter to work on the computer connector.

CO - CC	***NOTES***	None.

Lock the computer.
Switch off the ignition and check that the ignition module of the driver's seat belt pretensioner is correctly connected.

Disconnect the ignition module of the driver's seat belt pretensioner and connect a dummy ignition module to the ignition module connector.
Switch on the ignition and carry out a check using the diagnostic tool.
Replace the driver's pretensioner if the fault becomes stored (fault no longer declared present).

Disconnect the computer connector and fit the **75-track B53** adapter.
The CLIP, NXR or XRBAG tool must be used for measuring resistance on the **cable marked K** on the adapter.

If the value obtained is correct, check the wiring on the **75-track** connector (**tracks 28 and 53**).

Remove the driver seat and check the connections on the **28-track** connector under the seat (**tracks 14 and 28**).
Repair if necessary.
Fit the **28-track** control adapter to the seat (**tracks 14** and **28**).
CLIP, NXR or XRBAG must be used for measuring the resistance on **cable C**.
If the value obtained is incorrect, the wiring is faulty between the **28-track** connector and the driver's seat belt pretensioner (C1 and C3). Replace the wiring if necessary.

If the fault persists, the wiring is faulty between the **75-track** computer connector and the driver seat (C0 and C1).

AFTER REPAIR	Reconnect the computer and the ignition module of the pretensioner, then switch on the ignition again. Clear the computer memory then switch off the ignition. Carry out the check again using the diagnostic tool and, if there are no faults, unlock the computer. Destroy the pretensioner if it has been replaced (tool **Elé. 1287**).

GETtheMANUALS.org

DF080 PRESENT **CONTINUED**	

CC.1 - CC.0	***NOTES***	None.

Lock the computer.
Disconnect the ignition module of the driver's pretensioner and connect a dummy ignition module to the ignition module connector.
Switch on the ignition and carry out a check using the diagnostic tool.
If the fault becomes stored (fault no longer declared present), check the condition of the seat wiring.
Replace the driver's seat belt pretensioner if the wiring is not faulty.

Disconnect the computer connector and fit the **75-track B53** adapter.
The CLIP, NXR or XRBAG tools must be used for measuring the insulation corresponding to the type of fault on the **cable marked K** on the adapter.

If the value obtained is correct, check the wiring on the **75-track** connector (**tracks 28 and 53**).

Remove the passenger's seat and check the connections on the **28-track** connector under the seat (**tracks 14** and **28**). Repair if necessary.
Fit the **28-track** control adapter on the seat.
The CLIP, NXR or XRBAG tool MUST be used for measuring the insulation corresponding to the type of fault on **cable C** of the adapter.
If the value obtained is incorrect, the wiring is faulty between the **28-track** connector and the driver's seat belt pretensioner (C1 and C3). Replace the wiring if necessary.

If the fault persists, the wiring is faulty between the **75-track** computer connector and the driver seat (C0 and C1).

AFTER REPAIR	Reconnect the computer and the ignition module of the pretensioner, then switch on the ignition again. Clear the computer memory then switch off the ignition. Carry out the check again using the diagnostic tool and, if there are no faults, unlock the computer. Destroy the pretensioner if it has been replaced (tool **Elé. 1287**).

GETtheMANUALS.org

DF091 PRESENT	AIR BAG LOCKING SWITCH CIRCUIT CO : Open circuit CC.0 : Short circuit to earth CC.1 : Short circuit to **12 volts** 1.DEF : Configuration 2.DEF : Unstable contact condition (key locking)

NOTES	**Special notes:** Use the **75-track B53** adapter to work on the computer connector. Lock the computer using the command on the diagnostic tool.

CO - CC.0 - CC.1 - 2.DEF	***NOTES***	None.

Check the condition of the computer connections.
Check the condition of the **75-track** connector (locking system, wiring, etc)

Check that the locking switch is correctly connected and check its wiring.

Ensure continuity and insulation of the connections between:

Bornier B53 **terminal 39** ⟶ locking switch connector
Bornier B53 **terminal 64** ⟶ locking switch connector

Replace the locking switch if the fault persists.

1.DEF	***NOTES***	None.

This fault indicates an inconsistency between the computer configuration and the vehicle equipment detected by the computer. The computer detects the presence of a non-configured component or an incorrect configuration.

Modify the computer configuration using the **Configuration of system components** command.

AFTER REPAIR	Reconnect the computer and the locking switch, then switch on the ignition. Clear the computer memory then switch off the ignition. Carry out the check again using the diagnostic tool and, if there are no faults, unlock the computer.

GETtheMANUALS.org

DF092 PRESENT	FRONT SEAT INERTIA REEL LOCKING FUNCTION CC.0 : Short circuit to earth CC.1 : Short circuit to 12 volts 1.DEF : Configuration

NOTES	**Special notes:** never carry out measuring operations on ignition lines using any tool other than CLIP, NXR or XRBAG. Use the **B53** adapter to work on the computer connector.

CC.0	***NOTES***	None.

Lock the computer, disconnect the connector from the A computer, check its connections and fit **12-track bornier Elé. 1645**.

Ensure that there is **+ After ignition feed** on **track 3** and an **earth** to **track 1**.

Ensure insulation across these two connections.

check the condition of **track 8** on the A computer connections.

Disconnect the air bag computer connector and check the condition of its connections. Fit the **75-track B53** adapter.

Ensure continuity and insulation of the connection between:
Air bag computer **track 55** ⟶ **track 8** of A computer

If the connection is faulty, replace the wiring between the air bag computer and the A computer.

Using **12-track bornier Elé. 1645**, ensure that **the resistance** of the inertia wheels between **tracks 5 and 6** passenger side and **11 and 12** driver's side are approximately **47.5 Ohms ± 5**.

Is the resistance correct?

YES	Check the condition of the A computer connection again. Replace the A computer if the fault persists.

AFTER REPAIR	Reconnect the air bag computer and the A computer, then switch on the ignition. Clear the computer memory then switch off the ignition. Carry out the check again using the diagnostic tool and, if there are no faults, unlock the computer.

GETtheMANUALS.org

DF092 PRESENT **CONTINUED**	

NO

Remove the seat with the incorrect resistance and check the connections of the 28-track connector under the seat (**tracks 6 and 20**).

Fit the 28-track control adapter on the seat at point C1.

Measure the resistance of the seat inertia reel between tracks 6 and 20 of the bornier.

* **The resistance** is approximately **47.5 Ohms ± 5**: replace the wiring between the A computer and the 28-track connector under the seat.

* **The resistance** is not approximately **47.5 Ohms ± 5**: remove the trim from the seat and check that the inertia reel module is correctly connected.

If the module is correctly connected, measure the resistance directly on the inertia reel motor.

- **The resistance** is not approximately **47.5 Ohms ± 5**: replace the seat inertia reel.

- **The resistance** is approximately **47.5 Ohms ± 5**: replace the module between the 28-track connector and the seat inertia reel.

CC.1	***NOTES***	None.

Lock the computer, disconnect the connector from the A computer, check its connections and fit **12-track bornier Elé. 1645.**
Ensure that there is **+ After ignition feed** on **track 3** and an **earth** to **track 1**.
Ensure insulation across these two connections.

Check the condition of **track 8** on the A computer connections.
Disconnect the air bag computer connector and check the condition of its connections. Fit the **75-track B53** adapter.
Ensure continuity and insulation of the connection between:
Air bag computer **track 55** ⟶ **track 8** of A computer
If the connection is faulty, replace the wiring between the air bag computer and the A computer.

1.DEF	***NOTES***	None.

This fault indicates an inconsistency between the computer configuration and the vehicle equipment detected by the computer. The computer detects the presence of a non-configured component or an incorrect configuration.

Modify the computer configuration using the **Configuration of system components** command.

AFTER REPAIR	Reconnect the air bag computer and the A computer, then switch on the ignition. Clear the computer memory then switch off the ignition. Carry out the check again using the diagnostic tool and, if there are no faults, unlock the computer.

GETtheMANUALS.org

DF094 A DF153 PRESENT OR STORED	COMPUTER FAULT

NOTES	None.

Replace the air bag computer (refer to **the help section** for this operation).

AFTER REPAIR	None

GETtheMANUALS.org

DF157 **PRESENT**	LOCKING SENSOR CIRCUIT IMPEDANCE

NOTES	**PR122** switch in air bag active position: **400 ohms**. **PR122** switch in air bag deactivated position: **100 ohms**.

Check the condition of the computer connections.
Check the condition of the **75-track** connector (locking system, wiring, etc)

Check that the locking switch is correctly connected and check its wiring.

Ensure continuity and insulation of the connections between:

Bornier B53 **terminal 39** → locking switch connector
Bornier B53 **terminal 64** → locking switch connector

Replace the locking switch if the fault persists.

AFTER REPAIR	Reconnect the computer and the locking switch, then switch on the ignition. Clear the computer memory then switch off the ignition. Carry out the check again using the diagnostic tool and, if there are no faults, unlock the computer.

GETtheMANUALS.org

NOTES	Only check the conformity after a full check using the diagnostic tool.

Order	Function	Parameter or state Check or action	Display and notes	Fault finding
1	Diagnostic tool dialogue	-	Air bag ACU 3	CHART 1
2	Computer conformity	Vehicle type parameter	VEL SATIS 09	DF094
3	Computer configuration	Use the following commands: **NXR:** Configuration of system components **CLIP and OPTIMA:** configuration of ignition modules configuration of system components configuration of side sensors	Ensure that the computer configuration defined in the Current column corresponds to the vehicle equipment.	None
4	Warning light operation Computer initialisation check	Switch on the ignition	The warning light comes on for **3 seconds** when the ignition is switched on	None

GETtheMANUALS.org

REPLACING THE AIR BAG COMPUTER

The air bag computers are sold in locked mode to avoid all risk of accidental triggering (all ignition lines are inhibited).

The locked mode is signalled when the air bag fault warning light lights up on the instrument panel.

Follow this procedure when replacing an air bag computer:

– Ensure that the ignition is switched off.
– Replace the computer.
– Modify the computer configuration if necessary.
– Switch off the ignition.
– Carry out a check using the diagnostic tool.
– Unlock the computer only if no faults are indicated by the diagnostic tool.

DEFINITION OF THE TRIGGER LINES

L1: Driver's seat belt pretensioner circuit. (**cable K on B53**)

L2: Passenger seat belt pretensioner circuit. (**Cable L on B53**)

L3: Driver's side buckle pretensioner circuit. (**Cables B and C on B53**)

L4: Passenger side buckle pretensioner circuit. (**Cables E and F on B53**)

L 5: Passenger front air bag circuit 1. (**cable O on B53**)

L 6: Passenger front air bag circuit 2. (**cable P on B53**)

L 7: Driver's front air bag circuit 1. (**cable M on B53**)

L 8: Driver's front air bag circuit 2. (**Cable N on B53**)

L 9: Driver's side curtain air bag circuit. (**cable S on B53**)

L 10: Passenger side curtain air bag circuit. (**cable T on B53**)

L 11: Driver's front side air bag circuit. (**cable Q on B53**)

L 12: Passenger front side air bag circuit. (**cable R on B53**)

L 13: Driver's rear side air bag circuit. (**cable W on B53**)

L 14: Passenger rear side air bag circuit. (**cable X on B53**)

GETtheMANUALS.org

NOTES	This customer complaint should only be investigated after a complete check has been carried out using the diagnostic tool.

ABSENCE OF DIALOGUE WITH THE AIR BAG COMPUTER — **CHART 1**

GETtheMANUALS.org

CHART 1	Absence of dialogue with the air bag computer

NOTES	None

Try to establish dialogue with a computer on another vehicle to make sure that the diagnostic tool is not faulty.
If the tool is not the cause of the fault and dialogue cannot be established with any other computer on the same vehicle, it may be that a faulty computer is disrupting fault finding line **K**.
Disconnect the computers one at a time to locate the fault.
Check the battery voltage and carry out any operations necessary to obtain a correct voltage (**10.5 volts** < battery voltage < **16 volts**).

Check the presence and condition of the air bag computer supply voltage fuse.
Check that the computer connector is properly connected and check the condition of its wiring.
Check that the computer is correctly supplied:
- Disconnect the air bag computer and fit the **75-track B53** adapter.
- Check and ensure the presence of **+ after ignition feed** between the terminals marked **earth** and **+ after ignition feed.**

Check that the diagnostic socket is correctly supplied:
- **+ before ignition feed on track 16**.
- **Earth** on **tracks 4 and 5**.

Check the continuity and insulation of the lines of the diagnostic socket/air bag computer connection:
- Between the terminal marked **K** and **track 7** of the diagnostic socket.

If dialogue is still not established after these various checks, replace the air bag computer (refer to the Help section for this operation).

AFTER REPAIR	When dialogue is established, deal with any displayed faults.

GETtheMANUALS.org

VEL SATIS

8 Electrical equipment

88C AIRBAGS AND PRETENSIONERS

ACU3 AIRBAG
Vdiag No.: 24, 28, 2C, 2D

Fault finding - Introduction	88C - 1
Fault finding - System operation	88C - 15
Fault finding - Allocation of computer tracks	88C - 16
Fault finding - Replacement of components	88C - 20
Diagnostics - Configurations and Programming	88C - 21
Fault finding - Fault summary table	88C - 23
Fault finding - Interpretation of faults	88C - 25
Fault finding - Conformity check	88C - 115
Fault finding - Status and parameter summary table	88C - 116
Fault finding - Fault finding Chart	88C - 120

BJ0E - BJ0J - BJ0K - BJ0M - BJ0P - BJ0V

77 11 311 302 **FEBRUARY 2006** **EDITION ANGLAISE**

"The repair procedures given by the manufacturer in this document are based on the technical specifications current when it was prepared.

The methods may be modified as a result of changes introduced by the manufacturer in the production of the various component units and accessories from which his vehicles are constructed."

All rights reserved by Renault s.a.s.

Copying or translating, in part or in full, of this document or use of the service part reference numbering system is forbidden without the prior written authority of Renault s.a.s.

© Renault s.a.s. 2006

GETtheMANUALS.org

1. SCOPE OF THIS DOCUMENT

This document presents the fault finding procedure applicable to all computers with the following specifications:

Vehicle(s): **VELSATIS, LAGUNA II, ESPACE IV**	*Computer name:* **ACU3 AIRBAG**
Function concerned: **AIRBAG**	*Vdiag No.:* **24, 28, 2C, 2D**

2. PREREQUISITES FOR FAULT FINDING

Documentation type:

Fault finding procedures (this manual):
– Assisted fault finding (integrated into the diagnostic tool), Dialogys.
Wiring Diagrams:
– Visu-Schéma (CD-ROM), paper version.

Diagnostic tools type:

– CLIP

Type of special tooling required:

Special tooling required	
– Multimeter. – Set of adapters and borniers for using the Airbag and pretensioner wiring harness checks function of CLIP and XRBAG tools for updates comprising the borniers listed below. **– The development of the airbag ignition module connectors requires modification of a dummy ignition module.** **LOCAL MODIFICATION OF THE DUMMY IGNITION MODULE** **– Remove the ignition module from its red mounting and remove one of the two brown locking notches.**	
Elé. 1615	**75-track B53** computer bornier.
Elé. 1617 4/4	**10-track black** rotary switch adapter.
Elé. 1617 2/4	**6-track yellow** wiring harness test adapter.
Elé. 1616	**28-track** seat wiring harness test adapter.
Elé. 1684	**29-track** door wiring harness test adapter.
Elé. 1645	**12-track** A computer wiring harness test adapter.

GETtheMANUALS.org

3. RECAP

Phase 2 vehicle procedure

To save energy, the UCH of the VELSATIS, LAGUNAII and ESPACE IV cuts off the **+ after ignition feed** after **3 minutes**.

To run fault finding on a computer, it is possible to force the **+ after ignition feed** for **1 hour** by applying the following procedure:

- Press the card unlocking button,
- insert the card into the reader,
- press the Start button (interrupting the **timed + after ignition feed** mode),
- press the button for more than 5 seconds, until the immobiliser warning light starts to flash rapidly (**4 Hz**).

This **forced + after ignition feed** mode remains active for **1 hour**.
Pressing the Start button or removing the card from the card reader cuts off the **+ after ignition feed** but does not cut off the **forced after ignition feed** timed mode. Until one hour has elapsed, activating the **+ after ignition feed** will restart **forced + after ignition feed** for the remaining time.

Phase 1 vehicle procedure:

To run fault finding on the vehicle's computers, switch on the ignition in fault finding mode:

- **Vehicle card in card reader**.

Faults

Faults are declared as either present or stored (depending on whether they appeared in a certain context and have disappeared since, or whether they remain present but have not been diagnosed within the current context).

The **present** or **stored** status of faults should be taken into consideration when the diagnostic tool is switched on after the + after ignition feed (without any system components being active).

For a **present fault**, apply the procedure described in the **Interpretation of faults** section.

For a **stored fault**, note the faults displayed and apply the instructions in the **Notes** section.

If the fault is **confirmed** when the instructions in the Notes section are applied, the fault is present. Deal with the fault

If the fault is **not confirmed**, check:
- the electrical lines which correspond to the fault,
- the connectors for these lines (for oxidation, bent pins, etc.),
- the resistance of the component detected as faulty,
- the condition of the wires (melted or split insulation, wear).

GETtheMANUALS.org

Conformity check

The aim of the conformity check is to check data that does not produce a fault on the diagnostic tool because the data is inconsistent. Therefore, this stage is used to:
– carry out fault finding on faults that do not have a fault display, and which may correspond to a customer complaint,
– check that the system is operating correctly and that there is no risk of a fault recurring after repairs.

This section gives the fault finding procedures for statuses and parameters and the conditions for checking them.

If a status is not behaving normally or a parameter is outside the permitted tolerance values, consult the corresponding fault finding page.

Customer complaints - Fault finding chart

If the test with the diagnostic tool is OK but the customer complaint is still present, the fault should be processed by **customer complaints**.

A synopsis of the general procedure to follow is provided on the following page in the form of a flow chart

GETtheMANUALS.org

4. FAULT FINDING PROCEDURE

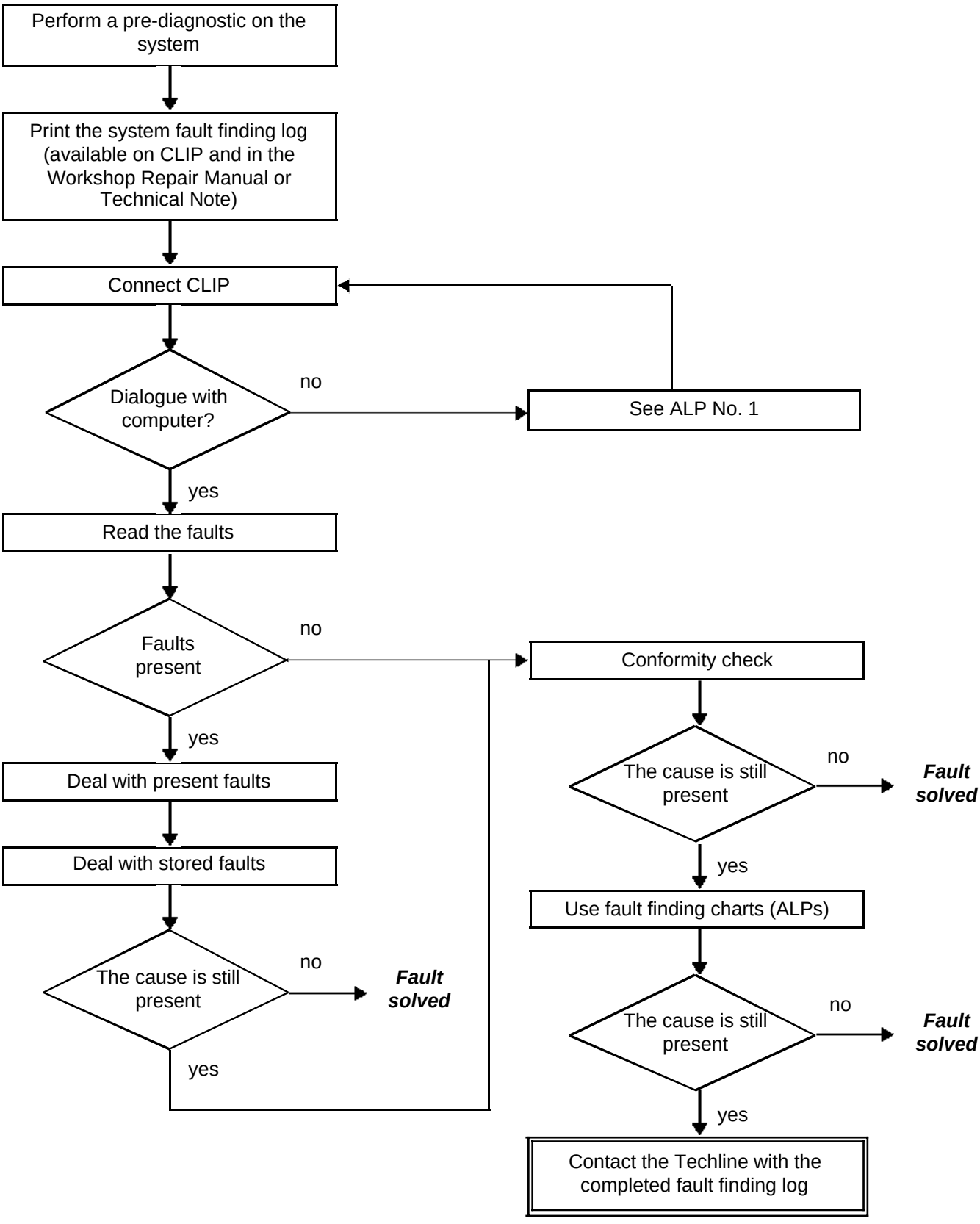

GETtheMANUALS.org

4. FAULT FINDING PROCEDURE (continued)

Wiring check

Fault finding problems
Disconnecting the connectors and/or manipulating the wiring harness may temporarily remove the cause of a fault.
Electrical measurements of voltage, resistance and insulation are generally correct, especially if the fault is not present when the analysis is made (stored fault).

Visual inspection
Look for damage under the bonnet and in the passenger compartment.
Carefully check the fuses, insulators and wiring harness routing.
Look for signs of oxidation.

Tactile inspection
While manipulating the wiring harness, use the diagnostic tool to note any change in fault status from stored to present.
Make sure that the connectors are properly locked.
Apply light pressure to the connectors.
Twist the wiring harness.
If there is a change in status, try to locate the source of the fault.

Inspection of each component
Disconnect the connectors and check the appearance of the clips and tabs, as well as the crimping (no crimping on the insulating section).
Make sure that the clips and tabs are properly locked in the sockets.
Check that no clips or tabs have been dislodged during connection.
Check the clip contact pressure using an appropriate model of tab.

Resistance check
Check the continuity of entire lines, then section by section.
Look for a short circuit to earth, to **+ 12 V** or to another wire.

If a fault is detected, repair or replace the wiring harness.

GETtheMANUALS.org

5. FAULT FINDING LOG

IMPORTANT!

NOTE
Any fault on a complex system requires thorough fault finding with the appropriate tools. The FAULT FINDING LOG, which should be completed during the procedure, enables you to keep track of the procedure which is carried out. It is an essential document when consulting the manufacturer.

IT IS THEREFORE MANDATORY TO FILL OUT A FAULT FINDING LOG EACH TIME FAULT FINDING IS CARRIED OUT

You will always be asked for this log:

- when requesting technical assistance from the Techline,
- for approval requests when replacing parts for which approval is obligatory,
- to be enclosed when returning monitored parts on request. The log is needed for warranty reimbursement, and enables better analysis of the parts removed.

6. SAFETY ADVICE

Safety rules must be observed during any work on a component to prevent any damage or injury:

- make sure that the battery is properly charged to avoid damaging the computers with a low load,
- use the appropriate tools.

During operations on the airbag/seat belt pretensioner systems it is essential that you lock the computer using the diagnostic tool to prevent any risk of accidental triggering (all the ignition lines will be inhibited). The locked mode is indicated when the instrument panel warning light comes on.

If it is impossible to connect the diagnostic tool, switch off the ignition, remove the system power supply fuse and wait at least 2 seconds for the discharge of the reserve power capacity.

Never measure the airbag or pretensioner trigger lines with any device other than XRBAG or CLIP's Airbag and pretensioner wiring harness check function.

Before using a dummy ignition module, ensure that its resistance is between 1.8 and 2.5 Ω.

Check during the operation that the computer feed voltage does not drop below 10 volts.

Disconnect the battery before any removal - refitting of a pyrotechnical component (airbag module, pretensioner or seat belt inertia reel).

NOTE
Airbag and pretensioner destruction and scrapping is subject to national legislation.

GETtheMANUALS.org

FAULT FINDING LOG

System: Airbags and pretensioners

List of monitored parts: ***Airbag computer***

Administrative identification

Date	2 0
Log completed by	
Dealership name or no./ Country	
Vehicle model	
VIN	
Engine	
Diagnostic tool	CLIP
Update version	

Customer complaint

	1192	Airbag warning light lit

Other — Your comments:

When the fault appears

	011	When the ignition is switched on
	004	Intermittently
	999	When starting the engine
	005	While driving

Other — Your comments:

Documentation used in fault finding

Fault finding procedure used	
Type of fault finding manual:	Workshop Repair Manual ❑ Technical Note ❑ Assisted fault finding ❑
Fault finding manual no:	
Wiring diagram used	
Wiring Diagram Technical Note No.:	
Other documentation	
Title and/or part number:	

RENAULT

FD 16
Fault finding log

FAULT FINDING LOG

System: Airbag and pretensioners

GETtheMANUALS.org

Identification of the computer and parts replaced for the system

Part 1 part no.	
Part 2 part no.	
Part 3 part no.	
Part 4 part no.	
Part 5 part no.	

To be read with the diagnostic tool (Identification screen):

Computer part no.	
Supplier no.	
Program no.	
Software version	
Calibration number	
VDIAG	

Faults found with the diagnostic tool

Fault no.	Present	Stored	Fault name	Specification

System-specific information

Total vehicle mileage when the customer complaint occurred:	
How often does it occur?	
How long after the engine starts?	

Additional information

What factors led you to replace the computer?	
What other parts were replaced?	
Other defective functions?	❑ CAN ❑ Instrument panel ❑ Rotary switch ❑ Wiring harness ❑ Battery ❑ Fuse ❑ Seats ❑ Others
Your comments:	

RENAULT

FD 16
Fault finding log

GETtheMANUALS.org

FAULT FINDING - SYSTEM CONFIGURATION DIAGRAM VELSATIS - LAGUNA II (FRONT section)

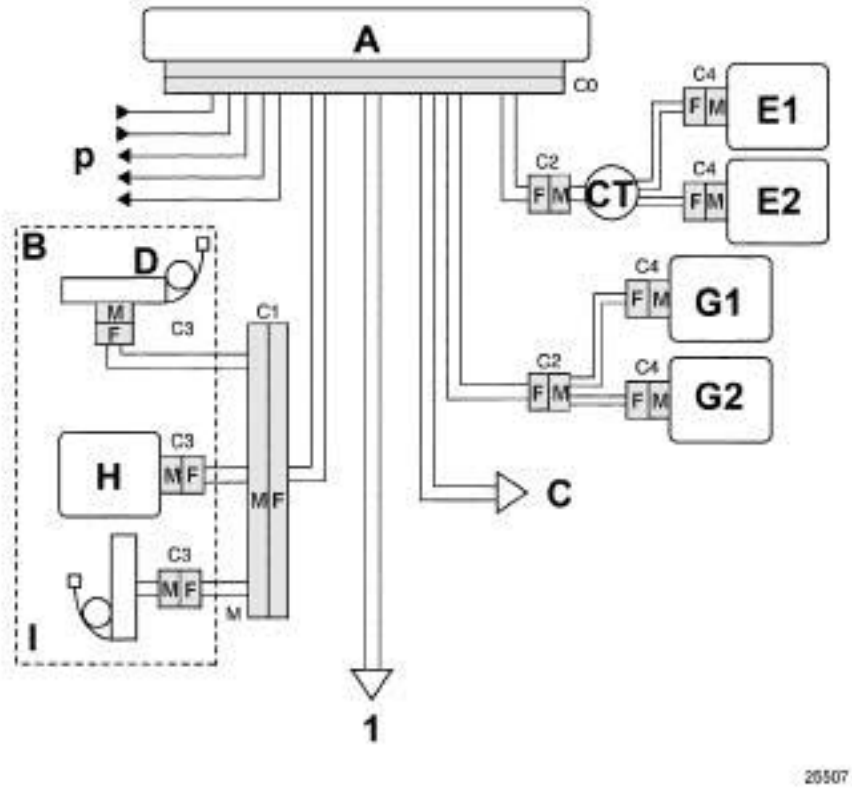

1 **To rear wiring**
A Central unit
B Driver's seat
C Front passenger seat
D Buckle pretensioner
E Driver's frontal airbag ignition module
G Passenger's frontal airbag ignition module
H Front chest level side airbag ignition module
I Lap belt pretensioner
CT Rotary switch + 12 V/Earth
P Diagnostic lines/Sensors/Locking switch/Multiplex network

	FRONT AIRBAGS	
	Measuring point	Correct value
Driver	C0, C2 and C4	1.5 to 7.1 Ω
Passenger	C0, C2 and C4	1.5 to 4.4 Ω
	SIDE AIRBAGS AND PRETENSIONERS	
	Measuring point	Correct value
	C0, C1 and C3	1.5 to 4.4 Ω

Correct insulation value: display ≥ 100.h or 9999 flashing.

GETtheMANUALS.org

FAULT FINDING - SYSTEM CONFIGURATION DIAGRAM VELSATIS - LAGUNA II (REAR section)

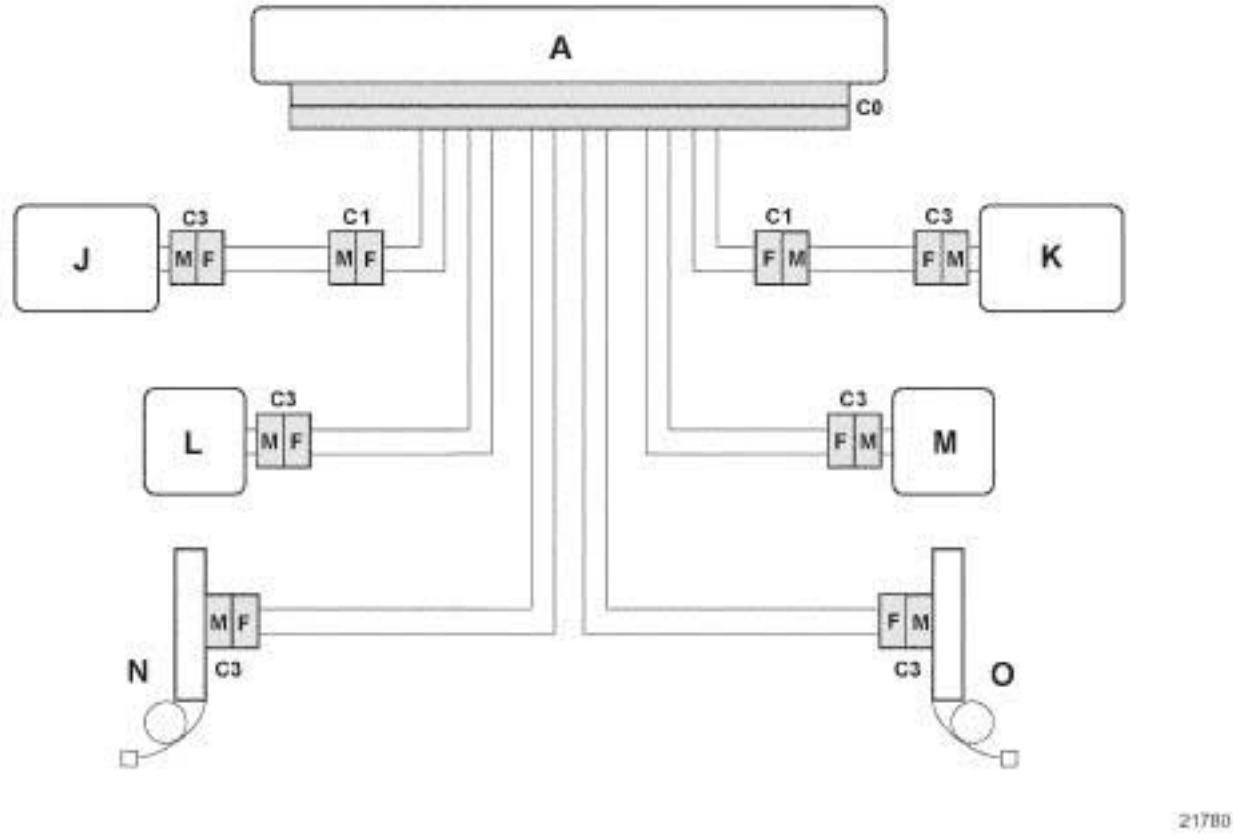

A Central unit
J/K Curtain airbag ignition modules
L/M Rear chest level side airbag ignition modules
N/O Rear pyrotechnic seat belt retractors

	FRONT AIRBAGS	
	Measuring point	Correct value
Driver	C0, C2 and C4	1.5 to 7.1 Ω
Passenger	C0, C2 and C4	1.5 to 4.4 Ω
	SIDE AIRBAGS AND PRETENSIONERS	
	Measuring point	Correct value
	C0, C1 and C3	1.5 to 4.4 Ω

Correct insulation value: display ≥ 100.h or 9999 flashing.

GETtheMANUALS.org

FAULT FINDING - SYSTEM CONFIGURATION DIAGRAM ESPACE IV (FRONT section)

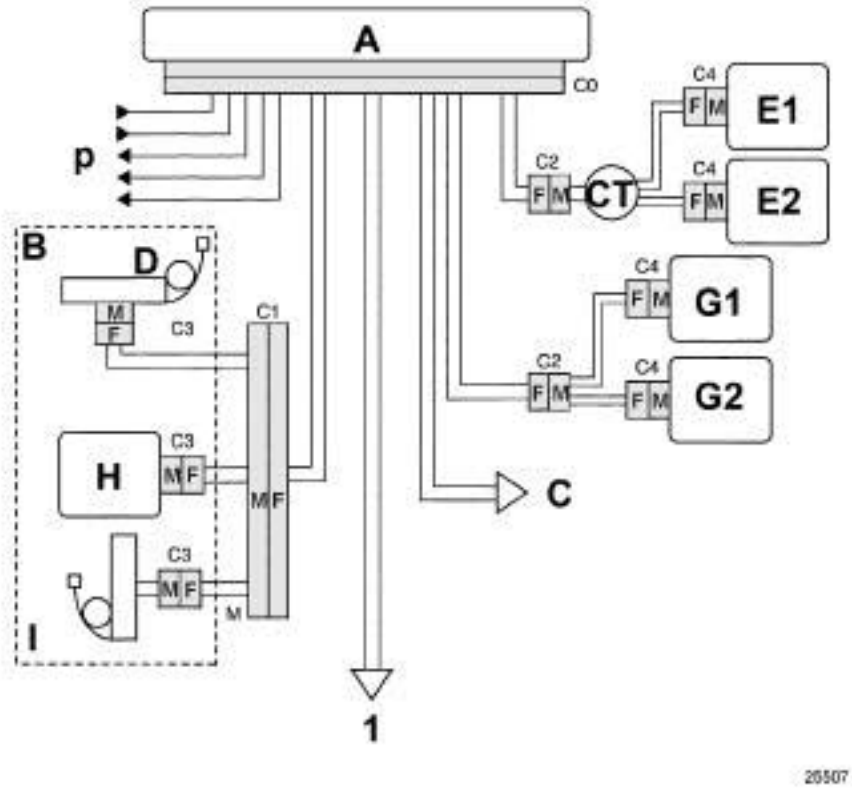

1 **To rear wiring**
A Central unit
B Driver's seat
C Front passenger seat
D Buckle pretensioner
E Driver's frontal airbag ignition module
G Passenger's frontal airbag ignition module
H Front chest level side airbag ignition module
I Lap belt pretensioner
CT Rotary switch + 12 V/Earth
P Diagnostic lines/Sensors/Locking switch/Multiplex network

	FRONT AIRBAGS	
	Measuring point	Correct value
Driver	C0, C2 and C4	1.5 to 7.1 Ω
Passenger	C0, C2 and C4	1.5 to 4.4 Ω
	SIDE AIRBAGS AND PRETENSIONERS	
	Measuring point	Correct value
	C0, C1 and C3	1.5 to 4.4 Ω

Correct insulation value: display ≥ 100.h or 9999 flashing.

GETtheMANUALS.org

FAULT FINDING - SYSTEM CONFIGURATION DIAGRAM ESPACE IV (REAR section)

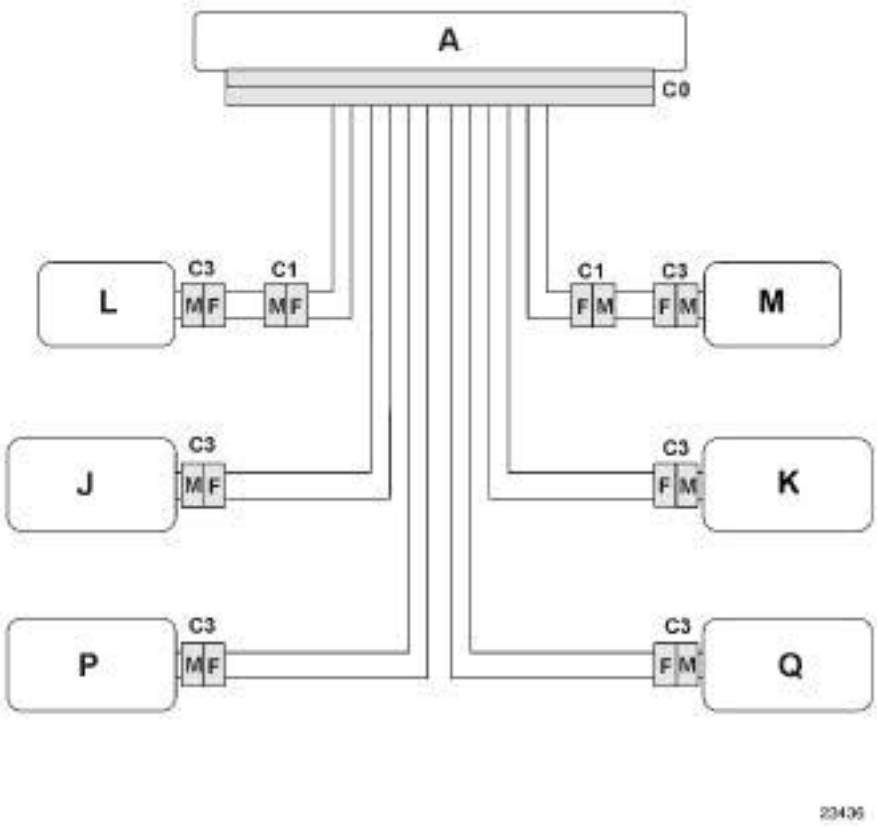

A Central unit
J/K Front curtain airbag ignition modules
L/M Rear chest level side airbag ignition modules
P/Q Rear curtain airbag ignition modules

	FRONT AIRBAGS	
	Measuring point	Correct value
Driver	C0, C2 and C4	1.5 to 7.1 Ω
Passenger	C0, C2 and C4	1.5 to 4.4 Ω
	SIDE AIRBAGS AND PRETENSIONERS	
	Measuring point	Correct value
	C0, C1 and C3	1.5 to 4.4 Ω

Correct insulation value: display ≥ 100.h or 9999 flashing.

GETtheMANUALS.org

DEFINITION OF TRIGGER LINES FOR THE VELSATIS AND LAGUNA II

L1: Driver's lap belt pretensioner circuit (**cable K on B53**).

L2: Passenger lap belt pretensioner circuit (**cable L on B53**).

L3: Driver's side buckle pretensioner circuit (**cable B or C on B53**).

L4: Passenger side buckle pretensioner circuit (**cable E or F on B53**).

L5: Passenger frontal airbag circuit, circuit 1 (**cable O on B53**).

L6: Passenger frontal airbag circuit, circuit 2 (**cable P on B53**).

L7: Driver's frontal airbag circuit, circuit 1 (**cable M on B53**).

L8: Driver's frontal airbag circuit, circuit 2 (**cable N on B53**).

L9: Curtain airbag circuit, driver side (**cable S on B53**).

L10: Curtain airbag circuit, passenger's side (**cable T on B53**).

L11: Driver's chest level front side airbag circuit (**cable Q on B53**).

L12: Passenger front chest level side airbag circuit (**cable R on B53**).

L13: Rear chest level side airbag circuit, driver side (**cable W on B53**).

L14: Rear chest level side airbag, passenger side (**cable X on B53**).

Note:
The ignition module circuits not present on a vehicle are declared in open circuit following the replacement of the computer (default configuration with all trigger lines present).
Configure the trigger lines present on the vehicle using the diagnostic tool (note: configuration of the ignition modules on CLIP covers 2 screens).

GETtheMANUALS.org

DEFINITION OF TRIGGER LINES FOR THE ESPACE IV

L1: Driver's lap belt pretensioner circuit (**cable K of B53**).

L2: Passenger lap belt pretensioner circuit (**cable L of B53**).

L3: Front buckle pretensioners circuit (**cable B and C on B53**).

L5: Passenger frontal airbag circuit, circuit 1 (**cable O on B53**).

L6: Passenger frontal airbag circuit, circuit 2 (**cable P on B53**).

L7: Driver's frontal airbag circuit, circuit 1 (**cable M on B53**).

L8: Driver's frontal airbag circuit, circuit 2 (**cable N on B53**).

L9: Front curtain airbag circuit, driver's side (**cable S on B53**).

L10: Front curtain airbag circuit, passenger's side (**cable T on B53**).

L11: Driver's chest level front side airbag circuit (**cable Q on B53**).

L12: Passenger chest level front side airbag circuit (**cable R on B53**).

L13: Rear chest level side airbag circuit, driver side (**cable W on B53**).

L14: Rear chest level side airbag, passenger side (**cable X on B53**).

L15: Rear curtain airbag circuit, driver's side (**cable U on B53**).

L16: Rear curtain airbag circuit, passenger's side (**cable V on B53**).

Note:
The ignition module circuits not present on a vehicle are declared in open circuit following the replacement of the computer (default configuration with all trigger lines present).
Configure the trigger lines present on the vehicle using the diagnostic tool (note: configuration of the ignition modules on CLIP covers 2 screens).

GETtheMANUALS.org

The main function of the ACU 3 computer is to activate, in the event of severe impact, the restraint systems such as seat belt pretensioners, the pyrotechnic inertia reels and the frontal and side airbags according to the system configuration.

The passenger and driver's frontal airbags are adaptive (2 ignition modules).

Presence of a passenger airbag locking switch

Two distinct impact levels are transmitted on the **CAN** network:
- level 1 unlocks the doors and lights the hazard warning lights,
- level 2 cuts off the fuel pump in addition to the level 1 actions.

Special features of the operation of the airbag locking switch in Vdiag 24, 28:

The vehicle user has **10 seconds** after **+ after ignition** to inhibit the passenger airbag by the key.

After this time, the computer will store the **DF193** fault, and light up the instrument panel warning light.

Switching the ignition off and on again will block this fault.

Special features of the operation of the airbag locking switch in Vdiag 2C, 2D:

Inhibition of the passenger airbag is authorised even with the engine running, at a vehicle speed of less than **4 mph (7 km/h)**.

If the switch status is changed above **4 mph (7 km/h)**, the system status remains unchanged in relation to is status before the speed threshold was exceeded, nevertheless the fault warning light will light up and **DF193** will be stored. If the speed signal is unavailable, it will not be possible to change the switch status.

In this case the two warning lights are dissociated and the passenger airbag status signal is maintained while the airbag fault warning light is lit.

Note for the VELSATIS and LAGUNA II:
The front buckle pretensioner of the driver's seat and the rear inertia reel on the driver's side, are wired in series.
The passenger's front buckle pretensioner and rear inertia reel on the passenger side are wired in series.

Note for the ESPACE IV:
The front buckle pretensioners are wired in series.

GETtheMANUALS.org

75-track connector (VELSATIS, LAGUNA II)

Description	Track	Track	Description
Not used	1	29	+ Passenger lap belt pretensioner
+ Buckle pretensioner: driver	2	30	+ After ignition feed
- Rear pyrotechnic inertia reel, driver's side	3	31	Earth
- Buckle pretensioner: passenger	4	32	Not used
+ Rear pyrotechnic inertia reel, passenger side	5	33	Not used
Not used	6	34	Diagnostic line K
Not used	7	35	- Driver's frontal airbag circuit 1
Not used	8	36	+ Driver's frontal airbag circuit 2
Not used	9	37	- Passenger frontal airbag circuit 1
Not used	10	38	+ Passenger frontal airbag circuit 2
Not used	11	39	- Airbag lock switch
Not used	12	40	Not used
Not used	13	41	- Driver's chest level side airbag
Not used	14	42	+ Passenger front chest level side airbag
Not used	15	43	- Driver's side curtain airbag
Not used	16	44	+ Passenger's side curtain airbag
Not used	17	45	+ Driver's side lateral impact sensor
Not used	18	46	+ Passenger side lateral impact sensor
Not used	19	47	Not used
Not used	20	48	Not used
Not used	21	49	- Rear chest level side airbag on driver's side
Not used	22	50	+ Rear chest level side airbag, passenger side
Not used	23	51	+ Rear pyrotechnic inertia reel, driver's side
Not used	24	52	- Rear pyrotechnic inertia reel, passenger side
Not used	25	53	+ Driver's lap belt pretensioner

GETtheMANUALS.org

75-track connector (VELSATIS, LAGUNA II) (CONTINUED)

Description	Track	Track	Description
- Buckle pretensioner: driver	26	54	- Passenger buckle pretensioner
+ Buckle pretensioner: passenger	27	55	Seat inertia reel locking unit connection
- Driver's lap belt pretensioner	28	56	+ Driver's seat position sensor
+ Passenger presence sheet	57	58	CAN H
CAN L	59	60	+ Driver's frontal airbag circuit 1
- Driver's frontal airbag circuit 2	61	62	+ Passenger frontal airbag circuit 1
- Passenger frontal airbag circuit 2	63	64	+ Airbag lock switch
Not used	65	66	+ Driver's front chest level side airbag
- Passenger front chest level side airbag	67	68	+ Driver's side curtain airbag
- Passenger side curtain airbag	69	70	- Driver's side lateral impact sensor
- Passenger side lateral impact sensor	71	72	Not used
Not used	73	74	+ Rear chest level side airbag, driver's side
- Rear chest level side airbag, passenger side	75		

GETtheMANUALS.org

75-track connector (ESPACE IV)

Description	Track	Track	Description
Not used	1	29	+ Passenger front buckle pretensioner
+ Driver's front buckle pretensioner	2	30	+ after ignition feed
- Front passenger buckle pretensioner	3	31	Earth
- Buckle pretensioner: passenger	4	32	Not used
+ Rear pyrotechnic inertia reel, passenger side	5	33	Not used
Not used	6	34	Diagnostic line K
Not used	7	35	- Driver's frontal airbag circuit 1
Not used	8	36	+ Driver's frontal airbag circuit 2
Not used	9	37	- Passenger frontal airbag circuit 1
Not used	10	38	+ Passenger frontal airbag circuit 2
Not used	11	39	- Airbag lock switch
Not used	12	40	Not used
Not used	13	41	- Driver's chest level side airbag
Not used	14	42	+ Passenger front chest level side airbag
Not used	15	43	- Front curtain airbag, driver's side
Not used	16	44	+ Front curtain airbag, passenger's side
Not used	17	45	+ Driver's side lateral impact sensor
Not used	18	46	+ Passenger side lateral impact sensor
Not used	19	47	- Rear curtain airbag, driver's side
Not used	20	48	+ Rear curtain airbag, passenger's side
Not used	21	49	- Rear chest level side airbag on driver's side
Not used	22	50	+ Rear chest level side airbag, passenger side
Not used	23	51	+ Passenger front buckle pretensioner
Not used	24	52	- Rear pyrotechnic seat belt retractor, passenger side
Not used	25	53	+ Driver's lap belt pretensioner
- Driver's front buckle pretensioner	26	54	- Passenger lap belt pretensioner
+ Buckle pretensioner: passenger	27	55	Not used

GETtheMANUALS.org

75-track connector (ESPACE IV) (CONTINUED)

Description	Track	Track	Description
- Driver's lap belt pretensioner	28	56	+ Driver's seat position sensor
+ Passenger presence sheet	57	58	CAN H
CAN L	59	60	+ Driver's frontal airbag circuit 1
- Driver's frontal airbag circuit 2	61	62	+ Passenger frontal airbag circuit 1
- Passenger frontal airbag circuit 2	63	64	+ Airbag lock switch
Not used	65	66	+ Driver's front chest level side airbag
- Passenger front chest level side airbag	67	68	+ Front curtain airbag, driver's side
- Front curtain airbag, passenger's side	69	70	- Driver's side lateral impact sensor
- Passenger side lateral impact sensor	71	72	+ Rear curtain airbag, driver's side
- Rear curtain airbag, passenger's side	73	74	+ Rear chest level side airbag, driver's side
- Rear chest level side airbag, passenger side	75		

GETtheMANUALS.org

NOTE
During work on the airbag/seat belt pretensioner systems it is vital that you lock the computer using the diagnostic tool to prevent any risk of accidental triggering (all the trigger lines will be disabled). This 'locked' mode is obtained using command VP006 Locking the computer and is indicated by the instrument panel warning light being lit.

Replacing a system component:

The battery must be disconnected when removing and refitting any pyrotechnic system component (airbag module, pretensioner or seat belt retractor).

Replacing the airbag computer

BEFORE REPLACING THE COMPUTER IT IS ESSENTIAL THAT YOU CONTACT THE TECHLINE.

It is prohibited to use command RZ001 Clear fault memory when DF001 Computer is present or stored, to allow the failure of the returned computer to be analysed.

The airbag computers are sold in locked mode to avoid any risk of accidental triggering (all trigger lines are inhibited).

Locked mode is signalled by illumination of the airbag fault warning light on the instrument panel (**DF034 present**).

Follow this procedure when replacing an airbag computer:
– check that the ignition is switched off,
– replace the computer,
– modify the computer configuration, if necessary (see Note),
– set the driving side parameter using the command **CF291**,
– enter the VIN into the computer with diagnostic tool command **VP010 Write VIN**,
– switch off the ignition,
– carry out a check using the diagnostic tool,
– enter the After-Sales operation date with diagnostic tool command **VP008 Enter last After-Sales operation date**,
– unlock the computer using command VP0078 Unlocking the computer, only when no fault is present on the diagnostic tool (apart from **DF034**),
– verify that the warning light goes out.

Note:
The ignition module circuits not present on a vehicle are declared in open circuit following the replacement of the computer (default configuration with all trigger lines present).
It is therefore necessary to configure the trigger lines present on the vehicle using the diagnostic tool (note: the configuration of the ignition modules on CLIP are performed on 2 screens).

GETtheMANUALS.org

COMMAND MODE

CONFIGURATION READING

– **LC034:** **Vehicle type.**
This command is for checking that the computer fitted to the vehicle corresponds to the vehicle type.

– **LC088:** **Driving side.**
This command permits verification that the driving side is correctly configured, in relation to the vehicle.
In case of the absence of a configuration, use command **CF291 Driving side** to configure it.

CONFIGURATION

– **CF291:** **Driving side.**
This command allows configuration of the driving side type (right-hand drive or left-hand drive) of the vehicle.
It is essential to carry out this configuration.

SETTINGS

– **VP006:** **Lock computer.**
This command should be used for any operation on the system. It permits inhibition of all trigger lines.

– **VP007:** **Unlock computer.**
This command is for unlocking the computer (either a new computer or following locking).

– **VP008:** **Write date of the last After-Sales service.**
This command is used to enter the date the system was serviced.

– **VP010:** **Write VIN.**
This command is for entering the vehicle identification number (VIN) into the computer.

GETtheMANUALS.org

COMMAND MODE (CONTINUED)

SPECIAL COMMAND

– **SC004:** **Read impact context.**
Use this command during repair of the vehicle following an impact. It gives a list of the lines triggered and the system's status at the moment of impact from the computer that is to be replaced.

– **SC005:** **Configuration of system components.**
This command allows the computer to be configured to the equipment actually installed in the vehicle.

– **SC008:** **Ignition module configuration.**
The ignition module configuration command allows the computer to be configured to the equipment actually installed in the vehicle.

NOTE
IGNITION MODULE CONFIGURATION COVERS TWO SCREENS (Use the 'next page' button to access the second screen).

OTHER COMMAND

– **RZ001:** **Fault memory.**
This command is used for clearing the stored faults from the computer.

GETtheMANUALS.org

VELSATIS, LAGUNA II

Tool fault	Associated DTC	Diagnostic tool title
DF002	**9042**	Computer supply voltage
DF010	**9040**	Fault warning light circuit
DF028	**9041**	Passenger airbag status warning light circuit
DF034	**907E**	Computer locked
DF039	**9035**	Driver's side sensor circuit
DF040	**9036**	Passenger's side sensor circuit
DF060	**9050**	Multiplex network
DF061	**9002**	Passenger lap belt pretensioner circuit
DF065	**9031**	Driver's front seat position sensor circuit
DF066	**900E**	Passenger's rear chest level side airbag circuit
DF067	**900D**	Driver's rear chest level side airbag circuit
DF068	**900C**	Passenger's chest front side airbag circuit
DF069	**900A**	Passenger side curtain airbag circuit
DF070	**9009**	Driver's side curtain airbag circuit
DF071	**9008**	Driver's frontal airbag circuit 2
DF072	**9007**	Driver's frontal airbag circuit 1
DF073	**9004**	Passenger's side buckle pretensioner circuit
DF074	**9006**	Passenger's frontal airbag circuit 2
DF075	**9005**	Passenger's frontal airbag circuit 1
DF076	**9003**	Driver's side buckle pretensioner circuit
DF077	**900B**	Driver's front side chest airbag circuit
DF080	**9001**	Driver's lap belt pretensioner circuit
DF091	**9034**	Airbag locking switch circuit
DF092	**9037**	Front seat inertia reel locking function
DF094 to DF153	**9081 to 90D2**	Computer fault
DF187	**9044**	Trigger lines configuration
DF193	**907C**	Passenger airbag locking status change
DF194	**907F**	Computer to be replaced following impact
DF242	**907B**	Left-hand/right-hand drive configuration

GETtheMANUALS.org

ESPACE IV

Tool fault	Associated DTC	Diagnostic tool title
DF002	**9042**	Computer supply voltage
DF010	**9040**	Fault warning light circuit
DF028	**9041**	Passenger airbag status warning light circuit
DF034	**907E**	Computer locked
DF060	**9050**	Multiplex network
DF061	**9002**	Passenger lap belt pretensioner circuit
DF065	**9031**	Driver's front seat position sensor circuit
DF066	**900E**	Passenger's rear chest level side airbag circuit
DF067	**900D**	Driver's rear chest level side airbag circuit
DF068	**900C**	Passenger's chest front side airbag circuit
DF071	**9008**	Driver's frontal airbag circuit 2
DF072	**9007**	Driver's frontal airbag circuit 1
DF074	**9006**	Passenger's frontal airbag circuit 2
DF075	**9005**	Passenger's frontal airbag circuit 1
DF077	**900B**	Driver's front side chest level airbag circuit
DF080	**9001**	Driver's lap belt pretensioner circuit
DF091	**9034**	Airbag locking switch circuit
DF094 to DF153	**9081 to 90D2**	Computer fault
DF179	**9035**	Driver's side front side sensor circuit
DF180	**9036**	Passenger side front side sensor circuit
DF187	**9044**	Trigger lines configuration
DF193	**907C**	Passenger airbag locking status change
DF194	**907F**	Computer to be replaced following impact
DF206	**900A**	Front curtain airbag circuit, passenger side
DF207	**9009**	Front curtain airbag circuit, driver's side
DF208	**900F**	Rear curtain airbag circuit, driver's side
DF209	**9010**	Rear curtain airbag circuit, passenger side
DF210	**9003**	Front buckles pretensioner circuit
DF242	**907B**	Left-hand/right-hand drive configuration

GETtheMANUALS.org

DF002 **PRESENT**	COMPUTER SUPPLY VOLTAGE 1.DEF: Voltage outside permitted range of values 2.DEF: Too many micro-cutoffs

NOTES	**Special notes:** Use the **75-track B53 Elé. 1615** adapter when working on the computer connector (**cable 1**).

1.DEF ***2.DEF***	***NOTES***	None

Carry out the operations necessary to obtain the correct voltage supply to the computer: **10.5 volts ± 0.1 < correct voltage < 16 volts ± 0.1**.
– Check the battery charge.
– Check the charge circuit.
– Check the tightness and the condition of the battery terminals.
– Check the computer earth.
– Check the condition of the computer connections and the locking.

AFTER REPAIR	Clear the computer fault memory. Switch off the ignition. Carry out the check again using the diagnostic tool and, if there is no fault, unlock the computer.

GETtheMANUALS.org

DF010 PRESENT	FAULT WARNING LIGHT CIRCUIT 1.DEF: Fault finding performed by the instrument panel 2.DEF: Consistency

NOTES	None

Apply the fault finding procedure relevant to this fault in the instrument panel fault finding information section.

AFTER REPAIR	Clear the computer fault memory. Switch off the ignition. Carry out the check again using the diagnostic tool and, if there is no fault, unlock the computer.

GETtheMANUALS.org

DF028 PRESENT	PASSENGER AIRBAG STATUS INDICATOR LIGHT CIRCUIT 1.DEF: Fault finding performed by the instrument panel 2.DEF: Consistency

NOTES	None

Apply the fault finding procedure relevant to this fault in the instrument panel fault finding information section.

AFTER REPAIR	Clear the computer fault memory. Switch off the ignition. Carry out the check again using the diagnostic tool and, if there is no fault, unlock the computer.

GETtheMANUALS.org

DF034 PRESENT	COMPUTER LOCKED

NOTES	**Special note:** Never unlock a computer if other faults are present.

With the diagnostic tool, use command **VP007 Unlock computer** to unlock the airbag computer.

AFTER REPAIR	Clear the computer fault memory. Switch off the ignition. Carry out the check again using the diagnostic tool and, if there is no fault, unlock the computer.

GETtheMANUALS.org

DF039 PRESENT	DRIVER'S SIDE SENSOR CIRCUIT CC.0 : Short circuit to earth 1.DEF: No communication 2.DEF: Disrupted communication 3.DEF: Faulty sensor 4.DEF: Value outside permitted tolerance

NOTES	**Special notes:** Use the **75-track B53 Elé. 1615** adapter when working on the computer connector.

CC.0 ***1.DEF*** ***2.DEF***	***NOTES***	None

Lock the computer using the diagnostic tool (VP006).
Check that the driver's side sensor is connected correctly and check its connections.
Check the condition of the computer connections (**tracks 45 and 70**).
Check the condition of the **75-track** connector (locking system, connections, etc.)
Check the continuity and insulation of the connections between:

Bornier B53 **terminal 70** ⟶ **track 1** sensor connector

Bornier B53 **terminal 45** ⟶ **track 2** sensor connector

3.DEF ***4.DEF***	***NOTES***	None

Replace the driver's side sensor.

AFTER REPAIR	Reconnect the computer and the driver's side sensor then switch on the ignition again. Clear the computer fault memory then switch off the ignition. Carry out the check again using the diagnostic tool and, if there is no fault, unlock the computer.

GETtheMANUALS.org

DF040 PRESENT	PASSENGER SIDE SENSOR CIRCUIT CC.0 : Short circuit to earth 1.DEF: No communication 2.DEF: Disrupted communication 3.DEF: Faulty sensor 4.DEF: Value outside permitted tolerance

NOTES	**Special notes:** Use the **75-track B53 Elé. 1615** adapter when working on the computer connector.

CC.0 ***1.DEF*** ***2.DEF***	***NOTES***	None

Lock the computer using the diagnostic tool (VP006).
Check that the passenger's side sensor is connected correctly and check its connections.
Check the condition of the connections on the computer (**tracks 46 and 71**).
Check the condition of the **75-track** connector (locking system, connections, etc.)
Check the continuity and insulation of the connections between:

Bornier B53 **terminal 71** ⟶ **track 1** sensor connector

Bornier B53 **terminal 46** ⟶ **track 2** sensor connector

3.DEF ***4.DEF***	***NOTES***	None

Replace the passenger side sensor.

AFTER REPAIR	Reconnect the computer and the passenger's side sensor then switch on the ignition again. Clear the computer fault memory then switch off the ignition. Carry out the check again using the diagnostic tool and, if there is no fault, unlock the computer.

GETtheMANUALS.org

DF060 PRESENT	MULTIPLEX NETWORK 1.DEF: Multiplex network 2.DEF: Invalid vehicle speed 3.DEF: Vehicle speed too high 4.DEF: No instrument panel multiplex signal 5.DEF: No ABS multiplex signal

Vdiag 2C, 2D

NOTES	None

Carry out the fault finding procedure for the multiplex network.

AFTER REPAIR	Clear the computer memory then switch off the ignition. Carry out another check using the diagnostic tool.

GETtheMANUALS.org

DF060 PRESENT	MULTIPLEX NETWORK 1.DEF: Carry out the multiplex network fault finding procedure

Vdiag 24, 28

NOTES	None

Carry out the fault finding procedure for the multiplex network.

AFTER REPAIR	Clear the computer memory then switch off the ignition. Carry out another check using the diagnostic tool.

GETtheMANUALS.org

DF061 PRESENT	PASSENGER LAP BELT PRETENSIONER CIRCUIT CC : Short circuit CO : Open circuit CC.1 : Short circuit to + 12 V CC.0 : Short circuit to earth

NOTES	**Priorities when dealing with a number of faults:** If fault **DF061** is present with at least one of **DF068, DF073, DF092**, begin the fault finding by checking the **28-track** under-seat connector.
	Special notes: Never carry out measuring operations on trigger lines using any tool other than CLIP or XRBAG. Use the **75-track B53 Elé. 1615** adapter when working on the computer connector (**cable L**) and the **28-track Elé. 1616** adapter when working on the seat (**cable C**).

CO ***CC***	***NOTES***	None

Lock the computer using the diagnostic tool (VP006). Switch off the ignition and check that the ignition module of the passenger lap belt pretensioner is correctly connected.
Disconnect the ignition module of the passenger lap belt pretensioner and connect a dummy ignition module to the ignition module connector. Switch on the ignition and carry out a check using the diagnostic tool. Replace the passenger lap belt pretensioner if the fault is stored (the fault is no longer declared present).
Disconnect the computer connector and fit **the 75-track B53 Elé. 1615** test **adapter**. The CLIP or XRBAG tools must be used for measuring resistance on the **cable marked L** on the adapter. If the value obtained is correct, check the connections of the **75-track (tracks 29 and 54)** connector.
Remove the passenger seat and check the wiring on the **28-track** connector under the seat (**tracks 14 and 28**). Repair if necessary. Fit the **28-track Elé. 1616** test adapter on the seat. The CLIP or XRBAG tool must be used to measure the resistance in adapter **cable C**. If the value obtained is incorrect, the wiring is faulty between the **28-track** connector and the passenger lap belt pretensioner (**C1 and C3**). Replace the wiring if necessary.
If the fault persists, the wiring is faulty between the **75-track** computer connector and the passenger seat (**C0 and C1**).

AFTER REPAIR	Reconnect the computer and the pretensioner igniter, then switch on the ignition again. Clear the computer fault memory then switch off the ignition. Carry out the check again using the diagnostic tool and, if there is no fault, unlock the computer. Destroy the pretensioner if it has been replaced (tool **Elé. 1287**).

GETtheMANUALS.org

DF061 **CONTINUED**	

CC.1 ***CC.0***	***NOTES***	None

Lock the computer using the diagnostic tool (VP006). Disconnect the ignition module of the passenger lap belt pretensioner and connect a dummy ignition module to the ignition module connector. Switch on the ignition and carry out a check using the diagnostic tool. If the fault is now stored (fault no longer declared as present), check the condition of the seat wiring. Replace the passenger lap belt pretensioner if the wiring is not faulty.
Disconnect the computer connector and fit **the 75-track B53 Elé. 1615** test **adapter**. The CLIP or XRBAG tools must be used for measuring the insulation appropriately for the type of fault on the **cable marked L** on the adapter. If the value obtained is correct, check the connections of the **75-track (tracks 29 and 54)** connector.
Remove the passenger seat and check the wiring on the **28-track** connector under the seat (**tracks 14 and 28**). Repair if necessary. Fit the **28-track Elé. 1616** test adapter on the seat. The CLIP or XRBAG tool must be used to correctly measure the insulation for the type of fault in adapter **cable C**. If the value obtained is incorrect, the wiring is faulty between the **28-track** connector and the passenger lap belt pretensioner (**C1 and C3**). Replace the wiring if necessary.
If the fault is still present, the wiring is faulty between the **75-track** computer connector and the **28-track** front passenger seat connector (**C0 and C1**).

AFTER REPAIR	Reconnect the computer and the pretensioner igniter, then switch on the ignition again. Clear the computer fault memory then switch off the ignition. Carry out the check again using the diagnostic tool and, if there is no fault, unlock the computer. Destroy the pretensioner if it has been replaced (tool **Elé. 1287**).

GETtheMANUALS.org

DF065 **PRESENT**	DRIVER'S SEAT POSITION SENSOR CIRCUIT CO : Open circuit CC.0 : Short circuit to earth CC.1 : Short circuit to + 12 V 1.DEF: Below minimum threshold 2.DEF: Configuration 3.DEF: Faulty sensor

NOTES	**Priorities when dealing with a number of faults:** If fault **DF065** is present with at least one of **DF076, DF077, DF080**, begin the fault finding by checking the **28-track** under-seat connector.
	Special notes: Use the **75-track B53 Elé. 1615** adapter when working on the computer connector and the **28-track Elé. 1616** adapter when working on the seat.

LAGUNA II

CO ***CC.0*** ***CC.1*** ***1.DEF***	***NOTES***	None

Lock the computer using the diagnostic tool (VP006).
Fit the **75-track B53** test adapter and measure the resistance between **tracks 31 and 56**, with the seat in the fully forward and fully back positions.

In the fully forward position, the resistance is approximately: **400 Ω**
In the fully back position, the resistance is approximately: **100 Ω**.

If the resistances are correct, check the connections of the **75-track** computer connector.

Remove the driver's seat and check the wiring on the **28-track** connector under the seat.
Repair if necessary.
Fit the **28 track** test adapter to the seat and measure the resistance between **tracks 9 and 13**.
Is the measured value approximately 100 or 400 Ω?

AFTER REPAIR	Reconnect the computer, the seat position sensor, refit the seat then switch on the ignition. Clear the computer fault memory then switch off the ignition. Carry out the check again using the diagnostic tool and, if there is no fault, unlock the computer.

GETtheMANUALS.org

DF065 **CONTINUED**	

LAGUNA II

NO	Check the connection and the condition of the sensor connectors. Check the continuity and insulation of the connections between: Bornier **Track 9** → **Sensor connector** Bornier **Track 13** → **Sensor connector** If the checks are correct, replace the seat position sensor.
YES	Check the wiring again on the seat connector (**track 13 and 9**) as well as on the **75-track connector (tracks 31 and 56**). If the fault is still present, the wiring is faulty between the computer and the driver's seat (**C0/C1**). Replace the wiring if necessary.

2.DEF	***NOTES***	None

This fault corresponds to an inconsistency between the computer configuration and the vehicle equipment detected by the computer.
The computer detects the presence of the driver's seat position sensor, but the computer is configured **WITHOUT**.
Modify the computer configuration using the **SC005 Configuration of system components** command.

3.DEF	***NOTES***	None

Replace the driver's seat position sensor.

AFTER REPAIR	Reconnect the computer, the seat position sensor, refit the seat then switch on the ignition. Clear the computer fault memory then switch off the ignition. Carry out the check again using the diagnostic tool and, if there is no fault, unlock the computer.

GETtheMANUALS.org

DF065 **PRESENT**	DRIVER'S FRONT SEAT POSITION SENSOR CIRCUIT CO : Open circuit CC.0 : Short circuit to earth CC.1 : Short circuit to + 12 V 1.DEF: Below minimum threshold 2.DEF: Configuration 3.DEF: Faulty sensor

NOTES	**Priorities when dealing with a number of faults:** If fault **DF065** is present with at least one of **DF076, DF077, DF080**, begin the fault finding by checking the **28-track** under-seat connector.
	Special notes: Use the **75-track B53 Elé.1615** adapter when working on the computer connector and the **28-track Elé.1616** adapter when working on the seat.

VELSATIS

CO ***CC.0*** ***CC.1*** ***1.DEF***	***NOTES***	None

Lock the computer using the diagnostic tool (VP006).
Fit the **75-track B53** test adapter and measure the resistance between **tracks 31 and 56** with the seat in the fully forward and fully back positions.

In the fully forward position, the resistance is approximately: **400 Ω**
In the fully back position, the resistance is approximately: **100 Ω**

If the resistances are correct, check the connections of the **75-track** computer connector.

Remove the driver's seat and check the wiring on the **28-track** connector under the seat.
Repair if necessary.
Fit the **28-track** test adapter to the seat and measure the resistance between **tracks 9 and 23**.
Is the measured value approximately 100 Ω or 400 Ω?

AFTER REPAIR	Reconnect the computer, the seat position sensor, refit the seat then switch on the ignition. Clear the computer fault memory then switch off the ignition. Carry out the check again using the diagnostic tool and, if there is no fault, unlock the computer.

GETtheMANUALS.org

DF065 **CONTINUED**	

VELSATIS

NO	Check the connection and the condition of the sensor connectors. Check the continuity and insulation of the connections between: Bornier **Track 9** → **Sensor connector** Bornier **Track 23** → **Sensor connector** If the checks are correct, replace the seat position sensor.
YES	Check the seat connector connections (**tracks 9 and 23**) again, as well as those of the **75-track (tracks 31 and 56)** connector. If the fault is still present, the wiring is faulty between the computer and the driver's seat (**C0/C1**). Replace the wiring if necessary.

2.DEF	***NOTES***	None

This fault corresponds to an inconsistency between the computer configuration and the vehicle equipment detected by the computer.
The computer detects the presence of the driver's seat position sensor, but the computer is configured **WITHOUT**.
Modify the computer configuration using the **SC005 Configuration of system components** command.

3.DEF	***NOTES***	None

Replace the driver's seat position sensor.

AFTER REPAIR	Reconnect the computer, the seat position sensor, refit the seat then switch on the ignition. Clear the computer fault memory then switch off the ignition. Carry out the check again using the diagnostic tool and, if there is no fault, unlock the computer.

GETtheMANUALS.org

DF065 PRESENT	DRIVER'S FRONT SEAT POSITION SENSOR CIRCUIT CO : Open circuit CC.0 : Short circuit to earth CC.1 : Short circuit to + 12 V 1.DEF: Below minimum threshold 2.DEF: Configuration 3.DEF: Faulty sensor

NOTES	**Priorities when dealing with a number of faults:** If fault **DF065** is present with at least one of **DF077, DF080, DF210**, begin the fault finding by checking the **28-track** under-seat connector.
	Special notes: Use the **75-track B53 Elé.1615** adapter when working on the computer connector and the **28-track Elé.1616** adapter when working on the seat.

ESPACE IV

CO ***CC.0*** ***CC.1*** ***1.DEF***	***NOTES***	None

Lock the computer using the diagnostic tool (VP006).
Fit the **75-track B53** test adapter and measure the resistance between **tracks 31 and 56** with the seat in the fully forward and fully back positions.

In the fully forward position, the resistance is approximately: **400 Ω**
In the fully back position, the resistance is approximately: **100 Ω**

If the resistances are correct, check the connections of the **75-track** computer connector.

Remove the driver's seat and check the wiring on the **28-track** connector under the seat.
Repair if necessary.
Fit the **28-track** test adapter to the seat and measure the resistance between **tracks 9 and 23**.
Is the measured value approximately 100 Ω or 400 Ω?

AFTER REPAIR	Reconnect the computer, the seat position sensor, refit the seat then switch on the ignition. Clear the computer fault memory then switch off the ignition. Carry out the check again using the diagnostic tool and, if there is no fault, unlock the computer.

GETtheMANUALS.org

DF065 **CONTINUED**	

ESPACE IV

NO	Check the connection and the condition of the sensor connectors. Check the continuity and insulation of the connections between: Bornier **Track 9** → **Sensor connector** Bornier **Track 23** → **Sensor connector** If the checks are correct, replace the seat position sensor.
YES	Check the seat connector connections (**tracks 9 and 23**) again, as well as those of the **75-track (tracks 31 and 56)** connector. If the fault is still present, the wiring is faulty between the computer and the driver's seat (**C0/C1**). Replace the wiring if necessary.

2.DEF	***NOTES***	None

This fault corresponds to an inconsistency between the computer configuration and the vehicle equipment detected by the computer.
The computer detects the presence of the driver's seat position sensor, but the computer is configured **WITHOUT**.
Modify the computer configuration using the **SC005 Configuration of system components** command.

3.DEF	***NOTES***	None

Replace the driver's seat position sensor.

AFTER REPAIR	Reconnect the computer, the seat position sensor, refit the seat then switch on the ignition. Clear the computer fault memory then switch off the ignition. Carry out the check again using the diagnostic tool and, if there is no fault, unlock the computer.

GETtheMANUALS.org

DF066 **PRESENT**	PASSENGER REAR CHEST LEVEL SIDE AIRBAG CIRCUIT CC : Short circuit CO : Open circuit CC.1 : Short circuit to + 12 V CC.0 : Short circuit to earth

NOTES	**Special notes:** Never carry out measuring operations on trigger lines using any tool other than CLIP or XRBAG. Use the **75-track B53 Elé. 1615** adapter for working on the computer connector (**cable X**).

CO ***CC***	***NOTES***	**Special notes:** Correct the trigger line configuration if the vehicle is not fitted with rear lateral airbags.

Lock the computer using the diagnostic tool (VP006). Switch off the ignition and check that the ignition module of the passenger's rear chest level side airbag is correctly connected.
Disconnect the ignition module from the passenger's rear chest level side airbag and connect a dummy ignition module to the ignition module connector. Switch on the ignition and carry out a check using the diagnostic tool. Replace the passenger's rear chest level side airbag if the fault becomes stored (fault no longer declared present).
Check the wiring on the **75-track** computer connector. Fit the **75-track B53** test adapter. CLIP or XRBAG must be used for checking the resistance on **cable X** of the adapter. If the value obtained is correct, check the computer wiring (**tracks 50 and 75**). If the value obtained is incorrect, the wiring is faulty between the computer and the rear chest level passenger-side airbag module (**C0/C3**). Replace the wiring if necessary.

AFTER REPAIR	Reconnect the computer and the ignition module of the passenger's rear chest level side airbag module then switch on the ignition. Clear the computer fault memory then switch off the ignition. Carry out the check again using the diagnostic tool and, if there is no fault, unlock the computer. When replacing the airbag module, do not forget to reconnect the earth on the new module. Destroy the passenger's rear chest level side airbag module if it has been replaced (**Elé. 1287**).

GETtheMANUALS.org

DF066 **CONTINUED**	

CC.1 ***CC.0***	***NOTES***	None

Lock the computer using the diagnostic tool. Disconnect the ignition module from the passenger's rear chest level side airbag and connect a dummy ignition module to the ignition module connector. Switch on the ignition and carry out a check using the diagnostic tool. Replace the passenger's rear chest level side airbag if the fault becomes stored (fault no longer declared as present).
Check the wiring on the **75-track** computer connector. Fit the **75-track B53** test adapter. The CLIP or XRBAG tools must be used for measuring the insulation appropriately for the type of fault on **cable X** on the adapter. If the value obtained is correct, check the computer wiring (**tracks 50 and 75**). If the value obtained is incorrect, the wiring is faulty between the computer and the rear chest level airbag module (**C0/C3**). Replace the wiring if necessary.

AFTER REPAIR	Reconnect the computer and the ignition module of the passenger's rear chest level side airbag module then switch on the ignition. Clear the computer fault memory then switch off the ignition. Carry out the check again using the diagnostic tool and, if there is no fault, unlock the computer. When replacing the airbag module, do not forget to reconnect the earth on the new module. Destroy the passenger's rear chest level side airbag module if it has been replaced (**Elé. 1287**).

GETtheMANUALS.org

DF066 **PRESENT**	PASSENGER REAR CHEST LEVEL SIDE AIRBAG CIRCUIT CC : Short circuit CO : Open circuit CC.1 : Short circuit to + 12 V CC.0 : Short circuit to earth

NOTES	**Special notes:** Never carry out measuring operations on trigger lines using any tool other than CLIP or XRBAG. Use the **75-track B53 Elé. 1615** adapter for working on the computer connector (**cable X**) and the **29-track Elé. 1684** adapter for working on the passenger rear door.

CO ***CC***	***NOTES***	**Special notes:** Correct the trigger line configuration if the vehicle is not fitted with rear lateral airbags.

Lock the computer using the diagnostic tool (VP006). Switch off the ignition and check that the ignition module of the passenger's rear chest level side airbag is correctly connected.
Disconnect the ignition module from the passenger's rear chest level side airbag and connect a dummy ignition module to the ignition module connector. Switch on the ignition and carry out a check using the diagnostic tool. Replace the passenger's rear chest level side airbag if the fault becomes stored (fault no longer declared present).
Disconnect the passenger compartment/rear passenger door connector **R156** and check the connector connections on the door side (**tracks A1 and B1**). Repair if necessary. Attach the **29-track Elé. 1684** test adapter to the airbag wiring (**point C1**). The CLIP, NXR or XRBAG tool must be used for measuring the resistance on the **cable** If the value obtained is incorrect, the wiring is faulty between connector **R156** and the passenger rear chest level side airbag (**C1/C3**), replace the wiring if necessary.
Check the connections again on the intermediate connector **R156 on the passenger compartment side (tracks A1 and B1)** as well as those on the **75-track (tracks 50 and 75)** connector. If the fault persists, the wiring is faulty between the computer and the intermediate connector **R156 (C0/C1)**. Replace the wiring between the computer and the passenger rear door/passenger compartment connector **R156** if necessary.

AFTER REPAIR	Reconnect the computer and the ignition module of the passenger's rear chest level side airbag module then switch on the ignition. Clear the computer fault memory then switch off the ignition. Carry out the check again using the diagnostic tool and, if there is no fault, unlock the computer. When replacing the airbag module, do not forget to reconnect the earth on the new module. Destroy the passenger's rear chest level side airbag module if it has been replaced (**Elé. 1287**).

GETtheMANUALS.org

DF066 **CONTINUED**	

CC.1 ***CC.0***	***NOTES***	None

Lock the computer using the diagnostic tool. Disconnect the ignition module from the passenger's rear chest level side airbag and connect a dummy ignition module to the ignition module connector. Switch on the ignition and carry out a check using the diagnostic tool. Replace the passenger's rear chest level side airbag if the fault becomes stored (fault no longer declared as present).
Disconnect the passenger compartment/rear passenger door connector **R156** and check the connector connections on the door side (**tracks A1 and B1**). Repair if necessary. Attach the **29-track Elé. 1684** test adapter to the airbag wiring (**point C1**). The CLIP or XRBAG tool must be used to measure the proper insulation for the type of fault in the **cable**. If the value obtained is incorrect, the wiring is faulty between connector **R156** and the passenger rear chest level side airbag (**C1/C3**), replace the wiring if necessary.
Check the connections again on the intermediate connector **R156 on the passenger compartment side (tracks A1 and B1)** as well as those on the **75-track (tracks 50 and 75)** connector. If the fault persists, the wiring is faulty between the computer and the intermediate connector **R156 (C0/C1)**. Replace the wiring between the computer and the passenger rear door/passenger compartment connector **R156** if necessary.

AFTER REPAIR	Reconnect the computer and the ignition module of the passenger's rear chest level side airbag module then switch on the ignition. Clear the computer fault memory then switch off the ignition. Carry out the check again using the diagnostic tool and, if there is no fault, unlock the computer. When replacing the airbag module, do not forget to reconnect the earth on the new module. Destroy the passenger's rear chest side airbag module if it has been replaced (tool **Elé. 1287**).

GETtheMANUALS.org

DF067 PRESENT	DRIVER'S REAR CHEST LEVEL SIDE AIRBAG CIRCUIT CC : Short circuit CO : Open circuit CC.1 : Short circuit to + 12 V CC.0 : Short circuit to earth

NOTES	**Special notes:** Never carry out measuring operations on trigger lines using any tool other than CLIP or XRBAG. Use the **75-track B53 Elé. 1615** adapter for working on the computer connector (**cable W**).

CO ***CC***	***NOTES***	**Special notes:** Correct the trigger line configuration if the vehicle is not fitted with rear lateral airbags.

Lock the computer using the diagnostic tool (VP006). Switch off the ignition and check that the ignition module of the driver's rear chest level side airbag is correctly connected.
Disconnect the ignition module from the driver's rear chest level side airbag and connect a dummy ignition module to the ignition module connector. Switch on the ignition and carry out a check using the diagnostic tool. Replace the driver's rear chest level side airbag if the fault becomes stored (fault no longer declared present).
Check the wiring on the **75-track** computer connector. Fit the **75-track B53** test adapter. The CLIP or XRBAG tool must be used for measuring the resistance on **cable W** of the adapter. If the value obtained is correct, check the computer wiring (**tracks 49 and 74**). If the value obtained is incorrect, the wiring is faulty between the computer and the rear chest level side airbag module (**C0/C3**). Replace the wiring if necessary.

AFTER REPAIR	Reconnect the computer and the ignition module of the driver's rear chest level side airbag module then switch on the ignition. Clear the computer fault memory then switch off the ignition. Carry out the check again using the diagnostic tool and, if there is no fault, unlock the computer. When replacing the airbag module, do not forget to reconnect the earth on the new module. Destroy the driver's rear chest level side airbag module if it has been replaced (tool **Elé. 1287**).

GETtheMANUALS.org

DF067 **CONTINUED**	

CC.1 ***CC.0***	***NOTES***	None

Lock the computer using the diagnostic tool (VP006). Disconnect the ignition module from the driver's rear chest level side airbag and connect a dummy ignition module to the ignition module connector. Switch on the ignition and carry out a check using the diagnostic tool. Replace the driver's rear chest level side airbag if the fault becomes stored (fault no longer declared present).
Check the wiring on the **75-track** computer connector. Fit the **75-track B53** test adapter. The CLIP or XRBAG tool must be used for measuring the insulation as appropriate for the type of fault on **cable W** of the adapter. If the value obtained is correct, check the computer wiring (**tracks 49 and 74**). If the value obtained is incorrect, the wiring is faulty between the computer and the rear chest level driver's-side airbag module (**C0/C3**). Replace the wiring if necessary.

AFTER REPAIR	Reconnect the computer and the ignition module of the driver's rear chest level side airbag module then switch on the ignition. Clear the computer fault memory then switch off the ignition. Carry out the check again using the diagnostic tool and, if there is no fault, unlock the computer. When replacing the airbag module, do not forget to reconnect the earth on the new module. Destroy the driver's rear chest level side airbag module if it has been replaced (tool **Elé. 1287**).

GETtheMANUALS.org

DF067 PRESENT	DRIVER'S REAR CHEST LEVEL SIDE AIRBAG CIRCUIT CC : Short circuit CO : Open circuit CC.1 : Short circuit to + 12 V CC.0 : Short circuit to earth

NOTES	**Special notes:** Never carry out measuring operations on trigger lines using any tool other than CLIP or XRBAG. Use the **75-track B53 Elé. 1615** adapter for working on the computer connector (**cable W**) and the **29-track Elé. 1684** adapter for working on the passenger rear door.

CO ***CC***	***NOTES***	**Special notes:** Correct the trigger line configuration if the vehicle is not fitted with rear lateral airbags.

Lock the computer using the diagnostic tool (VP006).
Switch off the ignition and check that the ignition module of the driver's rear chest level side airbag is correctly connected.

Disconnect the ignition module from the driver's rear chest level side airbag and connect a dummy ignition module to the ignition module connector.
Switch on the ignition and carry out a check using the diagnostic tool.
Replace the driver's rear chest level side airbag if the fault becomes stored (fault no longer declared present).

Disconnect the passenger compartment/rear driver's door connector **R155** and check the connector connections on the door side (**tracks A1 and B1**). Repair if necessary.
Attach the **29-track Elé. 1684** test adapter to the airbag wiring (**point C1**).
The CLIP, NXR or XRBAG tool must be used for measuring the resistance on the cable
If the value obtained is incorrect, the wiring is faulty between connector **R155** and the driver's rear chest side airbag (**C1/C3**), replace the wiring if necessary.

Check the connections again on the intermediate connector **R155 on the passenger compartment side (tracks A1 and B1)** as well as those on the **75-track (tracks 49 and 74)** connector.
If the fault persists, the wiring is faulty between the computer and the intermediate connector **R155 (C0/C1)**.
Replace the wiring if necessary.

AFTER REPAIR	Reconnect the computer and the ignition module of the driver's rear chest level side airbag module then switch on the ignition. Clear the computer fault memory then switch off the ignition. Carry out the check again using the diagnostic tool and, if there is no fault, unlock the computer. When replacing the airbag module, do not forget to reconnect the earth on the new module. Destroy the driver's rear chest level side airbag module if it has been replaced (tool **Elé. 1287**).

GETtheMANUALS.org

DF067 **CONTINUED**	

CC.1 ***CC.0***	***NOTES***	None

Lock the computer using the diagnostic tool (VP006). Disconnect the ignition module from the driver's rear chest level side airbag and connect a dummy ignition module to the ignition module connector. Switch on the ignition and carry out a check using the diagnostic tool. Replace the driver's rear chest level side airbag if the fault becomes stored (fault no longer declared present).
Disconnect the passenger compartment/rear driver's door connector **R155** and check the connector connections on the door side (**tracks A1 and B1**). Repair if necessary. Attach the **29-track Elé. 1684** test adapter to the airbag wiring (**point C1**). The CLIP or XRBAG tool must be used to measure the proper insulation for the type of fault in **the cable**. If the value obtained is incorrect, the wiring is faulty between connector **R155** and the driver's rear chest level side airbag (**C1/C3**), replace the wiring if necessary.
Check the connections again on the intermediate connector **R156 on the passenger compartment side (tracks A1 and B1)** as well as those on the **75-track (tracks 50 and 75)** connector. If the fault persists, the wiring is faulty between the computer and the intermediate connector **R155 (C0/C1)**. Replace the wiring between the computer and the driver's rear door/passenger compartment connector **R155** if necessary.

AFTER REPAIR	Reconnect the computer and the ignition module of the driver's rear chest level side airbag module then switch on the ignition. Clear the computer fault memory then switch off the ignition. Carry out the check again using the diagnostic tool and, if there is no fault, unlock the computer. When replacing the airbag module, do not forget to reconnect the earth on the new module. Destroy the driver's rear chest level side airbag module if it has been replaced (tool **Elé. 1287**).

GETtheMANUALS.org

DF068 PRESENT	PASSENGER CHEST FRONT SIDE AIRBAG CIRCUIT CC : Short circuit CO : Open circuit CC.1 : Short circuit to + 12 V CC.0 : Short circuit to earth

NOTES	**Priorities when dealing with a number of faults:** If faults **DF068 and DF073** are present, begin the fault finding by checking the **28-track** under-seat connector.
	Special notes: Never carry out measuring operations on trigger lines using any tool other than CLIP or XRBAG. Use the **75-track B53 Elé. 1615** adapter when working on the computer connector (**cable R**) and the **28-track Elé. 1616** adapter when working on the seat (**cable C**).

LAGUNA II

CO ***CC***	***NOTES***	None

Lock the computer using the diagnostic tool (VP006), disconnect the computer connector and fit the **75-track B53** adapter. The CLIP or XRBAG tools must be used for checking resistance of the **cable marked R** on the adapter. If the value obtained is correct, check the connections of the **75-track (tracks 42 and 67)** connector.

Remove the passenger seat and check the wiring on the **28-track** connector under the seat. Repair if necessary. Fit the **28-track** test adapter to the seat (**point C1**).
The CLIP or XRBAG tool must be used to measure the resistance in adapter **cable C**.
Is the value obtained correct?

AFTER REPAIR	Reconnect the computer and the ignition module of the passenger's front chest side airbag module then switch on the ignition again. Clear the computer fault memory then switch off the ignition. Carry out the check again using the diagnostic tool and, if there is no fault, unlock the computer. When replacing the airbag module, do not forget to reconnect the earth on the new module. Destroy the passenger's chest side airbag module if it has been replaced (tool **Elé. 1287**).

GETtheMANUALS.org

DF068 **CONTINUED 1**	

LAGUNA II

NO	Check the seat connector connections (**tracks 28 and 14**). Remove the trim from the front passenger seat and check that the side airbag ignition module is connected correctly.
	Disconnect the side airbag ignition module, connect a dummy ignition module to the ignition module connector and re-measure the resistance on **wire C** of the adapter. – If the value obtained is correct, replace the passenger's front chest side airbag module. – If the value obtained is still not correct, replace the wiring between **points C1 and C3** (seat wiring).
YES	Check the seat connector connections (**tracks 14 and 28**) again, as well as those of the **75-track (tracks 42 and 67)** connector.
	If the fault is still present, the wiring is faulty between the computer and the front passenger seat (**C0/C1**). Replace the wiring if necessary.

AFTER REPAIR	Reconnect the computer and the ignition module of the passenger's front chest side airbag module then switch on the ignition again. Clear the computer fault memory then switch off the ignition. Carry out the check again using the diagnostic tool and, if there is no fault, unlock the computer. When replacing the airbag module, do not forget to reconnect the earth on the new module. Destroy the passenger's chest side airbag module if it has been replaced (tool **Elé. 1287**).

GETtheMANUALS.org

DF068 **CONTINUED 2**	

LAGUNA II

CC.1 ***CC.0***	***NOTES***	None

Lock the computer using the diagnostic tool (VP006), disconnect the computer connector and fit the **75-track B53** adapter. The CLIP or XRBAG tools must be used for measuring the insulation appropriately for the type of fault on the **cable marked R** on the adapter.
If the value obtained is correct, check the connections of the **75-track (tracks 42 and 67)** connector.

Remove the passenger seat and check the wiring on the **28-track** connector under the seat. Repair if necessary. Fit the **28-track** test adapter to the seat (**point C1**).
The CLIP or XRBAG tool must be used to correctly measure the insulation for the type of fault in adapter **cable C**.
Is the value obtained correct?

NO

Check the seat connector connections (**tracks 14 and 28**).
Remove the trim from the front passenger seat and check that the side airbag ignition module is connected correctly.

Disconnect the side airbag ignition module, connect a dummy ignition module to the ignition module connector and again measure the proper insulation for the type of fault, in **cable C** of the adapter.
– If the value obtained is correct, replace the passenger's front chest side airbag module.
– If the value obtained is still not correct, replace the wiring between **points C1 and C3** (seat wiring).

YES

Check the seat connector connections (**tracks 14 and 28**) again, as well as those of the **75-track (tracks 42 and 67)** connector.

If the fault is still present, the wiring is faulty between the computer and the front passenger seat (**C0/C1**). Replace the wiring if necessary.

AFTER REPAIR	Reconnect the computer and the ignition module of the passenger's front chest side airbag module then switch on the ignition again. Clear the computer fault memory then switch off the ignition. Carry out the check again using the diagnostic tool and, if there is no fault, unlock the computer. When replacing the airbag module, do not forget to reconnect the earth on the new module. Destroy the passenger's chest side airbag module if it has been replaced (tool **Elé. 1287**).

GETtheMANUALS.org

DF068 PRESENT	PASSENGER CHEST FRONT SIDE AIRBAG CIRCUIT CC : Short circuit CO : Open circuit CC.1 : Short circuit to + 12 V CC.0 : Short circuit to earth

NOTES	**Priorities when dealing with a number of faults:** If faults **DF068 and DF073** are present, begin the fault finding by checking the **28-track** under-seat connector.
	Special notes: Never carry out measuring operations on trigger lines using any tool other than CLIP or XRBAG. Use the **75-track B53 Elé. 1615** adapter when operating on the computer connector (**cable R**) and the **28-track Elé. 1616** adapter when operating on the seat (**cable B**).

VELSATIS

CO ***CC***	***NOTES***	None

Lock the computer using the diagnostic tool (VP006), disconnect the computer connector and fit the **75-track B53** adapter. The CLIP or XRBAG tools must be used for checking resistance of the **cable marked R** on the adapter. If the value obtained is correct, check the connections of the **75-track (tracks 42 and 67)** connector.

Remove the passenger seat and check the wiring on the **28-track** connector under the seat. Repair if necessary. Fit the **28-track** test adapter to the seat (**point C1**).
The CLIP or XRBAG must be used to measure the resistance in adapter **cable B**.
Is the value obtained correct?

AFTER REPAIR	Reconnect the computer and the ignition module of the passenger's front chest side airbag module then switch on the ignition again. Clear the computer fault memory then switch off the ignition. Carry out the check again using the diagnostic tool and, if there is no fault, unlock the computer. When replacing the airbag module, do not forget to reconnect the earth on the new module. Destroy the passenger's chest side airbag module if it has been replaced (tool **Elé. 1287**).

GETtheMANUALS.org

DF068 **CONTINUED 1**	

VELSATIS

NO	Check the seat connector connections (**tracks 7 and 21**). Remove the trim from the front passenger seat and check that the side airbag ignition module is connected correctly.
	Disconnect the passenger airbag ignition module, connect a dummy ignition module to the ignition module connector then measure the resistance on **cable B** of the adapter again. – If the value obtained is correct, replace the passenger's front chest side airbag module. – If the value obtained is still not correct, replace the wiring between **points C1 and C3** (seat wiring).
YES	Check the seat connector connections (**tracks 7 and 21**) again, as well as those of the **75-track connector (tracks 42 and 67)**.
	If the fault is still present, the wiring is faulty between the computer and the front passenger seat (**C0/C1**). Replace the wiring if necessary.

AFTER REPAIR	Reconnect the computer and the ignition module of the passenger's front chest side airbag module then switch on the ignition again. Clear the computer fault memory then switch off the ignition. Carry out the check again using the diagnostic tool and, if there is no fault, unlock the computer. When replacing the airbag module, do not forget to reconnect the earth on the new module. Destroy the passenger's chest side airbag module if it has been replaced (tool **Elé. 1287**).

GETtheMANUALS.org

DF068 **CONTINUED 2**	

VELSATIS

CC.1 ***CC.0***	***NOTES***	None

Lock the computer using the diagnostic tool (VP006), disconnect the computer connector and fit the **75-track B53** adapter. The CLIP or XRBAG tools must be used for measuring the insulation appropriately for the type of fault on the **cable marked R** on the adapter.
If the value obtained is correct, check the connections of the **75-track (tracks 42 and 67)** connector.

Remove the passenger seat and check the wiring on the **28-track** connector under the seat. Repair if necessary. Fit the **28-track** test adapter to the seat (**point C1**).
The CLIP or XRBAG tool must be used to correctly measure the insulation for the type of fault in the adapter **cable marked B**.
Is the value obtained correct?

NO

Check the seat connector connections (**tracks 7 and 21**).
Remove the trim from the front passenger seat and check that the side airbag ignition module is connected correctly.

Disconnect the side airbag ignition module, connect a dummy ignition module to the ignition module connector and measure the proper insulation for the type of fault, in **cable B** of the adapter again.
– If the value obtained is correct, replace the passenger's front chest side airbag module.
– If the value obtained is still not correct, replace the wiring between **points C1 and C3** (seat wiring).

YES

Check the seat connector connections (**tracks 7 and 21**) again, as well as those of the **75-track connector (tracks 42 and 67)**.

If the fault is still present, the wiring is faulty between the computer and the front passenger seat (**C0/C1**). Replace the wiring if necessary.

AFTER REPAIR	Reconnect the computer and the ignition module of the passenger's front chest side airbag module then switch on the ignition again. Clear the computer fault memory then switch off the ignition. Carry out the check again using the diagnostic tool and, if there is no fault, unlock the computer. When replacing the airbag module, do not forget to reconnect the earth on the new module. Destroy the passenger's chest side airbag module if it has been replaced (tool **Elé. 1287**).

GETtheMANUALS.org

DF068 PRESENT	PASSENGER CHEST FRONT SIDE AIRBAG CIRCUIT CC : Short circuit CO : Open circuit CC.1 : Short circuit to + 12 V CC.0 : Short circuit to earth

NOTES	**Priorities when dealing with a number of faults:** If **DF068** is present with at least one of **DF061 or DF210**, begin the fault finding by checking the **28-track** under-seat connector.
	Special notes: Never carry out measuring operations on trigger lines using any tool other than CLIP or XRBAG. Use the **75-track B53 Elé. 1615** adapter when operating on the computer connector (**cable R**) and the **28-track Elé. 1616** adapter when operating on the seat (**cable B**).

ESPACE IV

CO ***CC***	***NOTES***	None

Lock the computer with the diagnostic tool, disconnect the computer connector and attach the **75 track B53 adapter**. The CLIP or XRBAG tools must be used for checking resistance of the **cable marked R** on the adapter. If the value obtained is correct, check the connections of the **75-track (tracks 42 and 67)** connector.
Remove the passenger seat and check the wiring on the **28-track** connector under the seat. Repair if necessary. Fit the **28-track** test adapter to the seat (**point C1**). The CLIP or XRBAG must be used to measure the resistance in adapter **cable B**. **Is the value obtained correct?**

AFTER REPAIR	Reconnect the computer and the ignition module of the passenger's front chest side airbag module then switch on the ignition again. Clear the computer fault memory then switch off the ignition. Carry out the check again using the diagnostic tool and, if there is no fault, unlock the computer. When replacing the airbag module, do not forget to reconnect the earth on the new module. Destroy the passenger's chest side airbag module if it has been replaced (tool **Elé. 1287**).

GETtheMANUALS.org

DF068 **CONTINUED 1**	

ESPACE IV

NO	Check the seat connector connections (**tracks 7 and 21**). Remove the trim from the front passenger seat and check that the side airbag ignition module is connected correctly.
	Disconnect the passenger airbag ignition module, connect a dummy ignition module to the ignition module connector then measure the resistance on **cable B** of the adapter again. – If the value obtained is correct, replace the passenger's front chest side airbag module. – If the value obtained is still not correct, replace the wiring between **points C1 and C3** (seat wiring).
YES	Check the seat connector connections (**tracks 7 and 21**) again, as well as those of the **75-track connector (tracks 42 and 67)**.
	If the fault is still present, the wiring is faulty between the computer and the front passenger seat (**C0/C1**). Replace the wiring if necessary.

AFTER REPAIR	Reconnect the computer and the ignition module of the passenger's front chest side airbag module then switch on the ignition again. Clear the computer fault memory then switch off the ignition. Carry out the check again using the diagnostic tool and, if there is no fault, unlock the computer. When replacing the airbag module, do not forget to reconnect the earth on the new module. Destroy the passenger's chest side airbag module if it has been replaced (tool **Elé. 1287**).

GETtheMANUALS.org

DF068 **CONTINUED 2**	

ESPACE IV

CC.1 ***CC.0***	***NOTES***	None

Lock the computer using the diagnostic tool (VP006), disconnect the computer connector and fit the **75-track B53** adapter. The CLIP or XRBAG tools must be used for measuring the insulation appropriately for the type of fault on the **cable marked R** on the adapter.
If the value obtained is correct, check the connections of the **75-track (tracks 42 and 67)** connector.

Remove the passenger seat and check the wiring on the **28-track** connector under the seat. Repair if necessary. Fit the **28-track** test adapter to the seat (**point C1**).
The CLIP or XRBAG tool must be used to correctly measure the insulation for the type of fault in the adapter **cable marked B**.
Is the value obtained correct?

NO

Check the seat connector connections (**tracks 7 and 21**).
Remove the trim from the front passenger seat and check that the side airbag ignition module is connected correctly.

Disconnect the side airbag ignition module, connect a dummy ignition module to the ignition module connector and measure the proper insulation for the type of fault, in **cable B** of the adapter again.
– If the value obtained is correct, replace the passenger's front chest side airbag module.
– If the value obtained is still not correct, replace the wiring between **points C1 and C3** (seat wiring).

YES

Check the seat connector connections (**tracks 7 and 21**) again, as well as those of the **75-track connector (tracks 42 and 67)**.

If the fault is still present, the wiring is faulty between the computer and the front passenger seat (**C0/C1**). Replace the wiring if necessary.

AFTER REPAIR	Reconnect the computer and the ignition module of the passenger's front chest side airbag module then switch on the ignition again. Clear the computer fault memory then switch off the ignition. Carry out the check again using the diagnostic tool and, if there is no fault, unlock the computer. When replacing the airbag module, do not forget to reconnect the earth on the new module. Destroy the passenger's chest side airbag module if it has been replaced (tool **Elé. 1287**).

GETtheMANUALS.org

DF069 PRESENT	PASSENGER CURTAIN AIRBAG CIRCUIT CC : Short circuit CO : Open circuit CC.1 : Short circuit to + 12 V CC.0 : Short circuit to earth

NOTES	**Special notes:** Never carry out measuring operations on trigger lines using any tool other than CLIP or XRBAG. Use the **75-track B53 Elé. 1615** adapter for working on the computer connector (**cable T**) and the **6 track Elé. 1617 (cable B)** adapter.

CO ***CC***	***NOTES***	None

Lock the computer using the diagnostic tool (VP006). Switch off the ignition and check that the ignition module of the passenger side curtain airbag is connected correctly (located behind the mounting bracket of the rear parcel shelf).
Disconnect the ignition module from the passenger side curtain airbag and connect a dummy ignition module to the ignition module connector. Switch on the ignition and carry out a check using the diagnostic tool. Replace the passenger side curtain airbag if the fault is now stored (fault no longer declared as present).
Remove the trim from the rear left-hand sill panel and check the wiring on the yellow **6-track** connector on the sill panel in the rear position (**tracks 5 and 6**). Repair if necessary. Fit the **6-track** test adapter to the airbag wiring (point **C1**). The CLIP or XRBAG must be used to measure the resistance in adapter **cable B**. If the value obtained is incorrect, the wiring is faulty between the **6-track** connector and the curtain airbag (**C1/C3**). Replace the wiring if necessary.
Check the wiring again on the **6 track (tracks 5 and 6)** intermediate connector as well as the wiring of the **75 track connector (tracks 44 and 69)**. If the fault is still present, the wiring is faulty between the computer and the **6-track** intermediate connector (C0/C1). Replace the wiring if necessary.

AFTER REPAIR	Reconnect the computer and the ignition module of the passenger side curtain airbag module then switch the ignition back on. Clear the computer fault memory then switch off the ignition. Carry out the check again using the diagnostic tool and, if there is no fault, unlock the computer. When replacing the airbag module, do not forget to reconnect the earth on the new module. Destroy the passenger side curtain airbag module if it has been replaced (tool **Elé. 1287**).

GETtheMANUALS.org

DF069 **CONTINUED**	

CC.1 ***CC.0***	***NOTES***	None

Lock the computer using the diagnostic tool (VP006). Switch off the ignition and check that the ignition module of the passenger side curtain airbag is connected correctly (located behind the mounting bracket of the rear parcel shelf).
Disconnect the ignition module from the passenger side curtain airbag and connect a dummy ignition module to the ignition module connector. Switch on the ignition and carry out a check using the diagnostic tool. Replace the passenger side curtain airbag if the fault becomes stored (fault no longer declared present).
Remove the trim from the rear left-hand sill panel and check the wiring on the yellow **6-track** connector on the sill panel in the rear position (**tracks 5 and 6**). Repair if necessary. Fit the **6-track** test adapter to the airbag wiring (**point C1**). The CLIP or XRBAG tool must be used to correctly measure the insulation for the type of fault in the adapter **cable marked B**. If the value obtained is incorrect, the wiring is faulty between the **6-track** connector and the curtain airbag (**C1/C3**). Replace the wiring if necessary.
Check the wiring again on the **6 track (tracks 5 and 6)** intermediate connector as well as the wiring of the **75 track connector (tracks 44 and 69)**. If the fault is still present, the wiring is faulty between the computer and the **6-track** intermediate connector **(C0/C1)**. Replace the wiring if necessary.

AFTER REPAIR	Reconnect the computer and the ignition module of the passenger side curtain airbag module then switch the ignition back on. Clear the computer fault memory then switch off the ignition. Carry out the check again using the diagnostic tool and, if there is no fault, unlock the computer. When replacing the airbag module, do not forget to reconnect the earth on the new module. Destroy the passenger side curtain airbag module if it has been replaced (tool **Elé. 1287**).

GETtheMANUALS.org

DF070 PRESENT	DRIVER SIDE CURTAIN AIRBAG CIRCUIT CC : Short circuit CO : Open circuit CC.1 : Short circuit to + 12 V CC.0 : Short circuit to earth

NOTES	**Special notes:** Never carry out measuring operations on trigger lines using any tool other than CLIP or XRBAG. Use the **75 track B53 Elé. 1615** adapter for working on the computer connector (**cable S**) and the **6-track Elé. 1617 (cable A)** adapter.

CO ***CC***	***NOTES***	None

Lock the computer using the diagnostic tool (VP006). Switch off the ignition and check that the ignition module of the driver's side curtain airbag is connected correctly (located behind the mounting bracket of the rear parcel shelf).
Disconnect the ignition module from the driver side curtain airbag and connect a dummy ignition module to the ignition module connector. Switch on the ignition and carry out a check using the diagnostic tool. Replace the driver's side curtain airbag if the fault becomes stored (fault no longer declared present).
Remove the trim from the rear left-hand sill panel and check the wiring on the yellow **6-track** connector on the sill panel in the rear position (**tracks 1 and 2**). Repair if necessary. Fit the **6-track** test adapter to the airbag wiring (point **C1**). The CLIP or XRBAG tool must be used for checking resistance in adapter **cable A**. If the value obtained is incorrect, the wiring is faulty between the **6-track** connector and the curtain airbag (**C1/C3**). Replace the wiring if necessary.
Check the wiring again on the **6-track (tracks 1 and 2)** intermediate connector as well as the wiring of the **75-track connector (tracks 43 and 68)**. If the fault is still present, the wiring is faulty between the computer and the **6-track** intermediate connector **(C0/C1)**. Replace the wiring if necessary.

AFTER REPAIR	Reconnect the computer and the ignition module of the driver's side curtain airbag module then switch the ignition back on. Clear the computer fault memory then switch off the ignition. Carry out the check again using the diagnostic tool and, if there are no faults, unlock the computer. When replacing the airbag module, do not forget to reconnect the earth on the new module. Destroy the driver's side curtain airbag module if it has been replaced (tool **Elé. 1287**).

GETtheMANUALS.org

DF070 **CONTINUED**	

CC.1 ***CC.0***	***NOTES***	None

Lock the computer using the diagnostic tool (VP006). Switch off the ignition and check that the ignition module of the driver's side curtain airbag is connected correctly (located behind the mounting bracket of the rear parcel shelf).
Disconnect the ignition module from the driver side curtain airbag and connect a dummy ignition module to the ignition module connector. Switch on the ignition and carry out a check using the diagnostic tool. Replace the driver side curtain airbag if the fault becomes stored (fault no longer declared present).
Remove the trim from the rear left-hand sill panel and check the wiring on the yellow **6-track** connector on the sill panel in the rear position (**tracks 1 and 2**). Repair if necessary. Fit the **6-track** test adapter to the airbag wiring (point **C1**). The CLIP or XRBAG tool must be used to correctly measure the insulation for the type of fault in adapter **cable A**. If the value obtained is incorrect, the wiring is faulty between the **6-track** connector and the curtain airbag (**C1/C3**). Replace the wiring if necessary.
Check the wiring again on the **6-track (tracks 1 and 2)** intermediate connector as well as the wiring of the **75-track connector (tracks 43 and 68)**. If the fault is still present, the wiring is faulty between the computer and the **6-track** intermediate connector **(C0/C1)**. Replace the wiring if necessary.

AFTER REPAIR	Reconnect the computer and the ignition module of the driver's side curtain airbag module then switch the ignition back on. Clear the computer fault memory then switch off the ignition. Carry out the check again using the diagnostic tool and, if there is no fault, unlock the computer. When replacing the airbag module, do not forget to reconnect the earth on the new module. Destroy the driver's side curtain airbag module if it has been replaced (tool **Elé. 1287**).

GETtheMANUALS.org

DF071 PRESENT	DRIVER'S FRONTAL AIRBAG CIRCUIT 2 CC : Short circuit CO : Open circuit CC.1 : Short circuit to + 12 V CC.0 : Short circuit to earth

NOTES	**Special notes:** Never carry out measuring operations on trigger lines using any tool other than CLIP or XRBAG. Use the **75-track B53 Elé. 1615** adapter for working on the computer connector (**cable N**) and the **10-track Elé. 1617** adapter for working on the rotary switch (**cable A**).

CO ***CC***	***NOTES***	None

Lock the computer using the diagnostic tool (VP006). Switch off the ignition and remove the driver's frontal airbag. Check that it is correctly connected.
Disconnect the driver's frontal airbag and attach 2 dummy ignition modules to the ignition module connectors. Switch on the ignition and carry out a check using the diagnostic tool. Replace the driver's frontal airbag if the fault becomes stored (fault no longer declared present).
With the ignition switched off, disconnect and reconnect the rotary switch connector under the steering wheel. Check the connections if the fault has become stored (fault no longer declared present).
Fit the **10-track** test adapter to the rotary switch (**point C2 tracks 9 and 10**). The CLIP or XRBAG tool must be used for checking resistance in adapter **cable A**. If the value obtained is incorrect, replace the rotary switch under the steering wheel.
Reconnect the rotary switch beneath the steering wheel, disconnect the computer and check the connector connections (**tracks 36 and 61**). Fit the **75-track adapter B53**. CLIP or XRBAG tools must be used for checking the resistance on **cable N** of the adapter. If the value obtained is incorrect, the wiring is faulty between the computer and the rotary switch connector (**C0/C2**). Replace the wiring if necessary.

AFTER REPAIR	Reconnect the computer and driver's frontal airbag ignition modules, then switch on the ignition. Clear the computer fault memory then switch off the ignition. Carry out the check again using the diagnostic tool and, if there is no fault, unlock the computer. Destroy the driver's frontal airbag if it has been replaced (tool **Elé. 1287**).

GETtheMANUALS.org

DF071 **CONTINUED**	

CC.1 ***CC.0***	***NOTES***	None

Lock the computer using the diagnostic tool (VP006). Switch off the ignition and remove the driver's frontal airbag. Check the condition of the firing lines.
Disconnect the driver's frontal airbag and attach 2 dummy ignition modules to the ignition module connectors. Fit the **10-track** test adapter to the rotary switch (**point C2 tracks 9 and 10**). The CLIP or XRBAG tool must be used to correctly measure the insulation for the type of fault in adapter **cable A**. If the value obtained is incorrect, replace the rotary switch beneath the steering wheel.
Reconnect the rotary switch beneath the steering wheel, disconnect the computer and check the connector connections (**tracks 36 and 61**). Fit the **75-track adapter B53**. The CLIP or XRBAG tools must be used for measuring the insulation appropriately for the type of fault on **cable N** on the adapter. If the value obtained is incorrect, the wiring is faulty between the computer and the rotary switch connector (**C0/C2**). Replace the wiring if necessary.

AFTER REPAIR	Reconnect the computer and frontal airbag ignition modules, then switch on the ignition. Clear the computer fault memory then switch off the ignition. Carry out the check again using the diagnostic tool and, if there is no fault, unlock the computer. Destroy the driver's frontal airbag if it has been replaced (tool **Elé. 1287**).

GETtheMANUALS.org

DF072 PRESENT	DRIVER'S FRONTAL AIRBAG CIRCUIT 1 CC : Short circuit CO : Open circuit CC.1 : Short circuit to + 12 V CC.0 : Short circuit to earth

NOTES	**Special notes:** Never carry out measuring operations on trigger lines using any tool other than CLIP or XRBAG. Use the **75-track B53 Elé. 1615** adapter for working on the computer connector (**cable M**) and the **10-track Elé. 1617** adapter for working on the rotary switch (**cable B**).

CO ***CC***	***NOTES***	None

Lock the computer using the diagnostic tool (VP006). Switch off the ignition and remove the driver's frontal airbag. Check that it is correctly connected.
Disconnect the driver's frontal airbag and attach 2 dummy ignition modules to the ignition module connectors. Switch on the ignition and carry out a check using the diagnostic tool. Replace the driver's frontal airbag if the fault becomes stored (fault no longer declared present).
With the ignition switched off, disconnect and reconnect the rotary switch connector under the steering wheel. Check the connections if the fault has become stored (fault no longer declared present).
Fit the **10-track** test adapter to the rotary switch (**point C2 tracks 6 and 7**). The CLIP or XRBAG must be used to measure the resistance in adapter **cable B**. If the value obtained is incorrect, replace the rotary switch under the steering wheel.
Reconnect the rotary switch under the steering wheel, disconnect the computer and check the connector connections (**tracks 35 and 60**). Fit the **75-track B53** adapter. CLIP or XRBAG tools must be used for measuring the resistance on **cable M** of the adapter. If the value obtained is incorrect, the wiring is faulty between the computer and the rotary switch connector (**C0/C2**). Replace the wiring if necessary.

AFTER REPAIR	Reconnect the computer and frontal airbag ignition modules, then switch on the ignition. Clear the computer fault memory then switch off the ignition. Carry out the check again using the diagnostic tool and, if there is no fault, unlock the computer. Destroy the driver's frontal airbag if it has been replaced (tool **Elé. 1287**).

GETtheMANUALS.org

DF072 **CONTINUED**	

CC.1 ***CC.0***	***NOTES***	None

Lock the computer using the diagnostic tool (VP006). Switch off the ignition and remove the driver's frontal airbag. Check the condition of the firing lines.
Disconnect the driver's frontal airbag and attach 2 dummy ignition modules to the ignition module connectors. Fit the **10-track** test adapter to the rotary switch (**point C2 tracks 6 and 7**). The CLIP or XRBAG tool must be used to correctly measure the insulation for the type of fault in the adapter **cable B**. If the value obtained is incorrect, replace the rotary switch under the steering wheel.
Reconnect the rotary switch under the steering wheel, disconnect the computer and check the connector connections (**tracks 35 and 60**). Fit the **75-track adapter B53**. The CLIP or XRBAG tools must be used for measuring the insulation appropriately for the type of fault on **cable M** on the adapter. If the value obtained is incorrect, the wiring is faulty between the computer and the rotary switch connector (**C0/C2**). Replace the wiring if necessary.

AFTER REPAIR	Reconnect the computer and frontal airbag ignition modules, then switch on the ignition. Clear the computer fault memory then switch off the ignition. Carry out the check again using the diagnostic tool and, if there is no fault, unlock the computer. Destroy the driver's frontal airbag if it has been replaced (tool **Elé. 1287**).

GETtheMANUALS.org

DF073 PRESENT	PASSENGER SIDE BUCKLE PRETENSIONER CIRCUIT CC : Short circuit CO : Open circuit CC.1 : Short circuit to + 12 V CC.0 : Short circuit to earth

NOTES	**Priorities when dealing with a number of faults:** If faults **DF073 and DF068** are present, begin the fault finding by checking the **28-track** under-seat connector.
	Special notes: The buckle pretensioner of the front passenger's seat is wired in series with the rear pyrotechnic seat belt retractor on the passenger's side. Never carry out measuring on the trigger lines with any tool other than CLIP or XRBAG. Use the **75-track B53 Elé. 1615** adapter for working on the computer connector (**cable E or F**) and the **28-track Elé. 1616** adapter for working on the seat (**cable A**).

CO ***CC***	***NOTES***	None

Lock the computer using the diagnostic tool (VP006).
Switch off the ignition and check that the ignition module of the passenger's seat buckle pretensioner is correctly connected.
Disconnect the ignition module of the pretensioner and connect a dummy ignition module to the ignition module connector.
Switch on the ignition and carry out a check using the diagnostic tool.
Replace the passenger front seat buckle pretensioner if the fault becomes stored (fault no longer declared present).

Switch off the ignition and check that the ignition module of the rear seat belt inertia reel, passenger's side is correctly connected.
Disconnect the ignition module of the inertia reel and connect a dummy ignition module to the ignition module connector.
Switch on the ignition and carry out a check using the diagnostic tool.
Replace the rear seat belt retractor on the passenger side, if the fault becomes stored (fault no longer declared present).

Disconnect the computer and check the connections of the connector (**tracks 4, 5, 27 and 52**).
Fit the **75-track B53 adapter**.
CLIP or XRBAG tools must be used for checking the resistance on **cable F** of the adapter.
If the value obtained is incorrect, the wiring is faulty between the computer and the rear seat belt retractor on the passenger side (**C0/C3**). Replace the wiring if necessary.
See next page.

AFTER REPAIR	Reconnect the computer, the pretensioner and the inertia reel then switch on the ignition again. Clear the computer fault memory then switch off the ignition. Carry out the check again using the diagnostic tool and, if there is no fault, unlock the computer. Destroy the pretensioner or the inertia reel if it has been replaced (tool **Elé. 1287**).

GETtheMANUALS.org

DF073 **CONTINUED 1**	

The CLIP or XRBAG must be used to measure the resistance in adapter **cable E**.
If the value obtained is incorrect, the wiring is faulty between the computer and the passenger seat buckle pretensioner (**C0/C3**).

Remove the passenger seat and check the wiring on the **28-track** connector under the seat (**tracks 8 and 22**).
Repair if necessary. Fit the **28-track** test adapter to the seat (**point C1**).
The CLIP or XRBAG tool must be used for checking resistance in adapter **cable A**.
Is the value obtained correct?

NO	Check the seat-side seat connector connections again (**tracks 8 and 22**). If the fault is still present, the wiring is faulty between the **28-track** seat connector and the passenger seat buckle pretensioner (**C1/C3**). Replace the wiring if necessary.
YES	Check the wiring again on the seat connector (**tracks 8 and 22**) on the passenger compartment wiring side and the wiring of the **75 track connector (tracks 4 and 27**). If the fault is still present, the wiring is faulty between the computer and the front passenger seat (**C0/C1**). Replace the wiring if necessary.

AFTER REPAIR	Reconnect the computer, the pretensioner and the inertia reel then switch on the ignition again. Clear the computer fault memory then switch off the ignition. Carry out the check again using the diagnostic tool and, if there is no fault, unlock the computer. Destroy the pretensioner or the inertia reel if it has been replaced (tool **Elé. 1287**).

GETtheMANUALS.org

DF073 **CONTINUED 2**	

CC.1 ***CC.0***	***NOTES***	None

Lock the computer using the diagnostic tool (VP006).
Disconnect the computer and check the connections of the connector (**tracks 4, 5, 27 and 52**).
Fit the **75-track B53 adapter**.
The CLIP or XRBAG tool must be used to correctly measure the insulation for the type of fault in the adapter **cable F**.
If the value obtained is incorrect, the wiring is faulty between the computer and the rear pyrotechnic seat belt retractor on the passenger side (**C0/C3**). Replace the wiring if necessary.

The CLIP or XRBAG tool must be used to correctly measure the insulation for the type of fault in adapter **cable E**.
If the value obtained is incorrect, remove the passenger seat and check the wiring on the **28-track** connector under the seat (**tracks 8 and 22**). Repair if necessary. Fit the **28-track** test adapter to the seat (**point C1**).
The CLIP or XRBAG tool must be used to correctly measure the insulation for the type of fault in adapter **cable A**.
Is the value obtained correct?

NO	Check the passenger-side seat connector connections again (**tracks 8 and 22**). If the fault is still present, the wiring is faulty between the **28-track** seat connector and the passenger seat buckle pretensioner (**C1/C3**). Replace the wiring if necessary.
YES	Check the wiring again on the seat connector (**tracks 8 and 22**) on the passenger compartment wiring harness side and the wiring of the **75-track connector (tracks 4 and 27**). If the fault is still present, the wiring is faulty between the computer and the front passenger seat (**C0/C1**). Replace the wiring if necessary.

AFTER REPAIR	Reconnect the computer, the pretensioner and the inertia reel then switch on the ignition again. Clear the computer fault memory then switch off the ignition. Carry out the check again using the diagnostic tool and, if there is no fault, unlock the computer. Destroy the pretensioner or the inertia reel if it has been replaced (tool **Elé. 1287**).

GETtheMANUALS.org

DF074 PRESENT	PASSENGER'S FRONTAL AIRBAG CIRCUIT 2 CC : Short circuit CO : Open circuit CC.1 : Short circuit to + 12 V CC.0 : Short circuit to earth

NOTES	**Special notes:** Never carry out measuring operations on trigger lines using any tool other than CLIP or XRBAG. Use the **75-track B53 Elé. 1615** adapter for working on the computer connector (**cable P**) and the **6 track Elé. 1617 (cable B)** adapter.

CO ***CC***	***NOTES***	None

Lock the computer using the diagnostic tool (VP006).
Switch off the ignition and check the connection and condition of the **6-track connector (tracks 5 and 6 point)** located under the right-hand tweeter speaker on the dashboard for the ESPACE IV and behind the glove box for the LAGUNA II and VELSATIS.

Fit the **6 track Elé. 1617** test adapter (point **C2 tracks 5 and 6**).
The CLIP or XRBAG must be used to measure the resistance in adapter **cable B**.
If the value obtained is incorrect, replace the passenger airbag along with its harness (**C2/C4**).

If the value is correct:
Reconnect the **6 track** connector, disconnect the computer and check the connections on the connector (**tracks 38 and 63**).
Fit the **75-track B53** test adapter.
CLIP or XRBAG tools must be used for measuring the resistance on **cable P** of the adapter.
If the value obtained is incorrect, the wiring is faulty between the computer and the **6-track** connector (C0/C2).
Replace the wiring if necessary.

AFTER REPAIR	Reconnect the computer and the **6-track** connector of the passenger airbag module then switch on the ignition. Clear the computer fault memory then switch off the ignition. Carry out the check again using the diagnostic tool and, if there is no fault, unlock the computer. When replacing the airbag module, do not forget to reconnect the earth on the new module. Destroy the passenger's frontal airbag module if it has been replaced (tool **Elé. 1287**).

GETtheMANUALS.org

DF074 **CONTINUED**	

CC.1 ***CC.0***	***NOTES***	None

Lock the computer using the diagnostic tool (VP006).
Switch off the ignition and check the connection and condition of the **6-track connector (tracks 5 and 6)** located under the right-hand tweeter speaker on the dashboard for the ESPACE IV and behind the glove box for the LAGUNA II and VELSATIS.

Fit the **6-track Elé. 1617** test adapter (point **C2 tracks 5 and 6**).
The CLIP or XRBAG tool must be used to correctly measure the insulation for the type of fault in the adapter **cable marked B**.
If the value obtained is incorrect, replace the passenger airbag along with its harness (**C2/C4**).

If the value is correct:
Reconnect the **6 track** connector, disconnect the computer and check the connections on the connector (**tracks 38 and 63**).
Fit the **75-track B53** test adapter.
The CLIP or XRBAG tools must be used for measuring the insulation appropriately for the type of fault on **cable P** on the adapter.
If the value obtained is incorrect, the wiring is faulty between the computer and the connections of the **6-track** connector (C0/C2).
Replace the wiring if necessary.

AFTER REPAIR	Reconnect the computer and the **6-track** connector of the passenger airbag module then switch on the ignition. Clear the computer fault memory then switch off the ignition. Carry out the check again using the diagnostic tool and, if there is no fault, unlock the computer. When replacing the airbag module, do not forget to reconnect the earth on the new module. Destroy the passenger's frontal airbag module if it has been replaced (tool **Elé. 1287**).

GETtheMANUALS.org

DF075 PRESENT	PASSENGER'S FRONTAL AIRBAG CIRCUIT 1 CC : Short circuit CO : Open circuit CC.1 : Short circuit to + 12 V CC.0 : Short circuit to earth

NOTES	**Special notes:** Never carry out measuring operations on trigger lines using any tool other than CLIP or XRBAG. Use the **75 track B53 Elé. 1615** adapter for working on the computer connector (**cable O**) and the **6-track Elé. 1617 (cable A)** adapter.

CO ***CC***	***NOTES***	None

Lock the computer using the diagnostic tool (VP006). Switch off the ignition and check the connection and condition of the **6-track (tracks 1 and 2)** connector located under the dashboard right-hand tweeter speaker.
Fit the **6-track Elé. 1617** test adapter (point **C2 tracks 1 and 2**). The CLIP or XRBAG tool must be used for checking resistance in adapter **cable A**. If the value obtained is incorrect, replace the passenger airbag along with its harness (**C2/C4**).
If the value is correct: Reconnect the **6 track** connector, disconnect the computer and check the connections on the connector (**tracks 37 and 62**). Fit the **75-track B53** test adapter. CLIP or XRBAG tools must be used for measuring the resistance on **cable O** of the adapter. If the value obtained is incorrect, the wiring is faulty between the computer and the **6 track connector (C0/C2)**. Replace the wiring if necessary.

AFTER REPAIR	Reconnect the computer and the **6-track** connector of the passenger airbag module then switch on the ignition. Clear the computer fault memory then switch off the ignition. Carry out the check again using the diagnostic tool and, if there is no fault, unlock the computer. When replacing the airbag module, do not forget to reconnect the earth on the new module. Destroy the passenger's frontal airbag module if it has been replaced (tool **Elé. 1287**).

GETtheMANUALS.org

DF075 **CONTINUED**	

CC.1 ***CC.0***	***NOTES***	None

Lock the computer using the diagnostic tool (VP006). Switch off the ignition and check the connection and condition of the **6-track (tracks 1 and 2)** connector located under the dashboard right-hand tweeter speaker.
Fit the **6-track Elé. 1617** test adapter (point C2 **tracks 1 and 2**). The CLIP or XRBAG tool must be used to correctly measure the insulation for the type of fault in adapter **cable A**. If the value obtained is incorrect, replace the passenger airbag along with its harness (**C2, C4**).
If the value is correct: Reconnect the **6 track** connector, disconnect the computer and check the connections on the connector (**tracks 32 and 67**). Fit the **75-track B53** test **adapter**. The CLIP or XRBAG tools must be used for measuring the insulation appropriately for the type of fault on **cable O** on the adapter. If the value obtained is incorrect, the wiring is faulty between the computer and the connections of the **6-track** connector (C0/C2). Replace the wiring if necessary.

AFTER REPAIR	Reconnect the computer and the **6-track** connector of the passenger airbag module then switch on the ignition. Clear the computer fault memory then switch off the ignition. Carry out the check again using the diagnostic tool and, if there is no fault, unlock the computer. When replacing the airbag module, do not forget to reconnect the earth on the new module. Destroy the passenger's frontal airbag module if it has been replaced (tool **Elé. 1287**).

GETtheMANUALS.org

DF076 PRESENT	DRIVER'S SIDE BUCKLE PRETENSIONER CIRCUIT CC : Short circuit CO : Open circuit CC.1 : Short circuit to + 12 V CC.0 : Short circuit to earth

NOTES	**Priorities when dealing with a number of faults:** If fault **DF076** is present with at least one of **DF065, DF077, DF080**, begin the fault finding by checking the **28-track** under-seat connector.
	Special notes: The buckle pretensioner of the driver's seat is wired in series with the rear pyrotechnic seat belt retractor on the driver's side. Never carry out measuring on the trigger lines with any tool other than CLIP or XRBAG. Use the **75-track B53 Elé. 1615** adapter for working on the computer connector (**cable B or C**) and the **28-track Elé. 1616** adapter for working on the seat (**cable A**).

CO ***CC***	***NOTES***	None

Lock the computer using the diagnostic tool (VP006).
Switch off the ignition and check that the ignition module of the driver's seat buckle pretensioner is correctly connected.
Disconnect the ignition module of the pretensioner and connect a dummy ignition module to the ignition module connector.
Switch on the ignition and carry out a check using the diagnostic tool.
Replace the driver's seat buckle pretensioner if the fault becomes stored (fault no longer declared present).

Switch off the ignition and check that the ignition module of the rear pyrotechnic seat belt retractor, driver's side is correctly connected.
Disconnect the ignition module of the inertia reel and connect a dummy ignition module to the ignition module connector.
Switch on the ignition and carry out a check using the diagnostic tool.
Replace the rear pyrotechnic seat belt retractor, driver's side, if the fault becomes stored (fault no longer declared present).

Reconnect the pretensioner and the inertia reel.
Disconnect the computer and check the connections of the connector (**tracks 2, 3, 26 and 51**).
Fit the **75-track adapter B53**.
The CLIP or XRBAG tool must be used to measure the resistance in adapter **cable C**.
If the value obtained is incorrect, the wiring is faulty between the computer and the rear pyrotechnic seat belt retractor, driver's side (**C0/C3**). Replace the wiring if necessary.
See next page.

AFTER REPAIR	Reconnect the computer, the pretensioner and the inertia reel then switch on the ignition again. Clear the computer fault memory then switch off the ignition. Carry out the check again using the diagnostic tool and, if there is no fault, unlock the computer. Destroy the pretensioner or the inertia reel if it has been replaced (tool **Elé. 1287**).

GETtheMANUALS.org

DF076 **CONTINUED 1**	

The CLIP or XRBAG must be used to measure the resistance in adapter **cable B**.
If the value obtained is incorrect, the wiring is faulty between the computer and the driver's seat buckle pretensioner (**C0/C3**).

Remove the driver's seat and check the wiring on the **28-track** connector under the seat (**tracks 8 and 22**). Repair if necessary. Fit the **28-track** test adapter to the seat (**point C1**).
The CLIP or XRBAG tool must be used for checking resistance in adapter **cable A**.
Is the value obtained correct?

NO	Check the driver's side seat connector connections again (**tracks 8 and 22**). If the fault is still present, the wiring is faulty between the **28-track** seat connector and the driver's seat buckle pretensioner (**C1/C3**). Replace the wiring if necessary.
YES	Check the wiring again on the seat connector (**tracks 8 and 22**) on the passenger compartment wiring harness side and the wiring of the **75 track connector (tracks 2 and 26)**.
	If the fault is still present, the wiring is faulty between the computer and the driver's seat (**C0/C1**). Replace the wiring if necessary.

AFTER REPAIR	Reconnect the computer, the pretensioner and the inertia reel then switch on the ignition again. Clear the computer fault memory then switch off the ignition. Carry out the check again using the diagnostic tool and, if there is no fault, unlock the computer. Destroy the pretensioner or the inertia reel if it has been replaced (tool **Elé. 1287**).

GETtheMANUALS.org

DF076 **CONTINUED 2**	

CC.1 ***CC.0***	***NOTES***	None

Lock the computer using the diagnostic tool (VP006).
Disconnect the computer and check the connections of the connector (**tracks 2, 3, 26 and 51**).
Fit the **75-track adapter B53**.
CLIP or XRBAG tools must be used for the insulation measurement appropriate to the type of fault, on **cable C** of the adapter.
If the value obtained is incorrect, the wiring is faulty between the computer and the rear pyrotechnic seat belt retractor, driver's side (**C0/C3**). Replace the wiring if necessary.

The CLIP or XRBAG tool must be used to correctly measure the insulation for the type of fault in the adapter **cable marked B**.
If the value obtained is incorrect, remove the driver's seat and check the wiring on the **28-track** connector under the seat (**tracks 8 and 22**). Repair if necessary. Fit the **28-track** test adapter to the seat (**point C1**).
The CLIP or XRBAG tool must be used to correctly measure the insulation for the type of fault in adapter **cable A**.
Is the value obtained correct?

NO	Check the driver's side seat connector connections again (**tracks 8 and 22**). If the fault is still present, the wiring is faulty between the **28-track** seat connector and the driver's seat buckle pretensioner (**C1/C3**). Replace the wiring if necessary.
YES	Check the wiring again on the seat connector (**tracks 8 and 22**) on the passenger compartment wiring harness side and the wiring of the **75 track connector (tracks 2 and 26)**.
	If the fault is still present, the wiring is faulty between the computer and the driver's seat (**C0/C1**). Replace the wiring if necessary.

AFTER REPAIR	Reconnect the computer, the pretensioner and the inertia reel then switch on the ignition again. Clear the computer fault memory then switch off the ignition. Carry out the check again using the diagnostic tool and, if there is no fault, unlock the computer. Destroy the pretensioner or the inertia reel if it has been replaced (tool **Elé. 1287**).

GETtheMANUALS.org

DF077 **PRESENT**	DRIVER'S FRONT CHEST SIDE AIRBAG CIRCUIT CC : Short circuit CO : Open circuit CC.1 : Short circuit to + 12 V CC.0 : Short circuit to earth

NOTES	**Priorities when dealing with a number of faults:** If fault **DF077** is present with at least one of **DF065, DF076, DF080**, begin the fault finding by checking the **28-track** under-seat connector.
	Special notes: Never carry out measuring operations on trigger lines using any tool other than CLIP or XRBAG. Use the **75 track B53 Elé. 1615** adapter for working on the computer connector (**cable Q**) and the **28 track Elé. 1616** adapter for working on the seat (**cable C**).

LAGUNA II

CO ***CC***	***NOTES***	None

Lock the computer using the diagnostic tool (VP006), disconnect the computer connector and fit the **75-track B53 adapter**. The CLIP or XRBAG tools must be used for measuring resistance on the **cable marked Q** on the adapter. If the value obtained is correct, check the connections of the **75-track (tracks 41 and 66)** connector.

Remove the driver's seat and check the wiring on the **28-track** connector under the seat.
Repair if necessary.
Fit the **28-track** test adapter to the seat (**point C1**).
The CLIP or XRBAG tool must be used to measure the resistance in adapter **cable C**.
Is the value obtained correct?

AFTER REPAIR	Reconnect the computer and the ignition module of the driver's front side chest airbag module then switch on the ignition. Clear the computer fault memory then switch off the ignition. Carry out the check again using the diagnostic tool and, if there is no fault, unlock the computer. When replacing the airbag module, do not forget to reconnect the earth on the new module. Destroy the chest side airbag module if it has been replaced (tool **Elé. 1287**).

GETtheMANUALS.org

DF077 **CONTINUED 1**	

LAGUNA II

NO	Check the seat connector connections (**tracks 14 and 28**). Remove the trim from the driver's seat and check that the side airbag ignition module is correctly connected.
	Disconnect the side airbag ignition module, connect a dummy ignition module to the ignition module connector and re-measure the resistance on **cable C** of the adapter. – If the value obtained is correct, replace the driver's front chest side airbag module. – If the value obtained is still not correct, replace the wiring between **points C1 and C3** (seat wiring).
YES	Check the seat connector connections (**tracks 14 and 28**) again, as well as those of the **75-track (tracks 41 and 66)** connector.
	If the fault is still present, the wiring is faulty between the computer and the driver's seat (**C0/C1**). Replace the wiring if necessary.

AFTER REPAIR	Reconnect the computer and the ignition module of the driver's front side chest airbag module then switch on the ignition. Clear the computer fault memory then switch off the ignition. Carry out the check again using the diagnostic tool and, if there is no fault, unlock the computer. When replacing the airbag module, do not forget to reconnect the earth on the new module. Destroy the chest side airbag module if it has been replaced (tool **Elé. 1287**).

GETtheMANUALS.org

DF077 **CONTINUED 2**	

LAGUNA II

CC.1 ***CC.0***	***NOTES***	None

Lock the computer using the diagnostic tool (VP006), disconnect the computer connector and fit the **75-track B53** adapter. The CLIP or XRBAG tools must be used for measuring the insulation appropriately for the type of fault on the **cable marked Q** on the adapter.
If the value obtained is correct, check the connections of the **75-track (tracks 41 and 66)** connector.

Remove the driver's seat and check the wiring on the **28-track** connector under the seat.
Repair if necessary.
Fit the **28-track** test adapter to the seat (**point C1**).
The CLIP or XRBAG tool must be used to correctly measure the insulation for the type of fault in adapter **cable C**.
Is the value obtained correct?

NO

Check the seat connector connections (**tracks 14 and 28**).
Remove the trim from the driver's seat and check that the side airbag ignition module is correctly connected.

Disconnect the side airbag ignition module, connect a dummy ignition module to the ignition module connector and again measure the proper insulation for the type of fault, in **cable C** of the adapter.
– If the value obtained is correct, replace the driver's front chest side airbag module.
– If the value obtained is still not correct, replace the wiring between **points C1 and C3** (seat wiring).

YES

Check the seat connector connections (**tracks 14 and 28**) again, as well as those of the **75-track (tracks 41 and 66)** connector.

If the fault is still present, the wiring is faulty between the computer and the driver's seat (**C0/C1**). Replace the wiring if necessary.

AFTER REPAIR

Reconnect the computer and the ignition module of the driver's front side chest airbag module then switch on the ignition. Clear the computer fault memory then switch off the ignition.
Carry out the check again using the diagnostic tool and, if there is no fault, unlock the computer. When replacing the airbag module, do not forget to reconnect the earth on the new module. Destroy the driver's chest side airbag module if it has been replaced (tool **Elé. 1287**).

GETtheMANUALS.org

DF077 **PRESENT**	DRIVER'S FRONT CHEST SIDE AIRBAG CIRCUIT CC : Short circuit CO : Open circuit CC.1 : Short circuit to + 12 V CC.0 : Short circuit to earth

NOTES	**Priorities when dealing with a number of faults:** If fault **DF077** is present with at least one of **DF065, DF076, DF080**, begin the fault finding by checking the **28-track** under-seat connector.
	Special notes: Never carry out measuring operations on trigger lines using any tool other than CLIP or XRBAG. Use the **75-track B53 Elé. 1615** adapter for operating on the computer connector (**cable Q**) and the **28-track Elé. 1616** adapter for operating on the seat (**cable B**).

VELSATIS

Lock the computer using the diagnostic tool (VP006), disconnect the computer connector and fit the **75-track B53** test **adapter**. The CLIP or XRBAG tools must be used for measuring resistance on the **cable marked Q** on the adapter. If the value obtained is correct, check the connections of the **75-track (tracks 41 and 66)** connector.
Remove the driver's seat and check the wiring on the **28-track** connector under the seat. Repair if necessary. Fit the **28-track** test adapter to the seat (**point C1**). The CLIP or XRBAG must be used to measure the resistance in adapter **cable B**. **Is the value obtained correct?**

AFTER REPAIR	Reconnect the computer and the ignition module of the driver's front side chest airbag module then switch on the ignition. Clear the computer fault memory then switch off the ignition. Carry out the check again using the diagnostic tool and, if there is no fault, unlock the computer. When replacing the airbag module, do not forget to reconnect the earth on the new module. Destroy the driver's chest side airbag module if it has been replaced (tool **Elé. 1287**).

GETtheMANUALS.org

DF077 **CONTINUED 1**	

VELSATIS

NO	Check the seat connector connections (**tracks 7 and 21**). Remove the trim from the driver's seat and check that the side airbag ignition module is correctly connected.
	Disconnect the passenger airbag ignition module, connect a dummy ignition module to the ignition module connector then measure the resistance on **cable B** of the adapter again. – If the value obtained is correct, replace the driver's front chest side airbag module. – If the value obtained is still not correct, replace the wiring between **points C1 and C3 (seat wiring)**.
YES	Check the seat connector connections (**tracks 7 and 21**) again, as well as those of the **75-track connector (tracks 41 and 66)**.
	If the fault is still present, the wiring is faulty between the computer and the driver's seat (**C0/C1**). Replace the wiring if necessary.

AFTER REPAIR	Reconnect the computer and the ignition module of the driver's front side chest airbag module then switch on the ignition. Clear the computer fault memory then switch off the ignition. Carry out the check again using the diagnostic tool and, if there is no fault, unlock the computer. When replacing the airbag module, do not forget to reconnect the earth on the new module. Destroy the driver's chest side airbag module if it has been replaced (tool **Elé. 1287**).

GETtheMANUALS.org

DF077 **CONTINUED 2**	

VELSATIS

CC.1 ***CC.0***	***NOTES***	None

Lock the computer using the diagnostic tool (VP006), disconnect the computer connector and fit the **75-track B53** test **adapter**. The CLIP or XRBAG tools must be used for measuring the insulation appropriately for the type of fault on the **cable marked Q** on the adapter.
If the value obtained is correct, check the connections of the **75-track (tracks 41 and 66)** connector.

Remove the driver's seat and check the wiring on the **28-track** connector under the seat.
Repair if necessary.
Fit the **28-track** test adapter to the seat (**point C1**).
The CLIP or XRBAG tool must be used to correctly measure the insulation for the type of fault in the adapter **cable marked B**.
Is the value obtained correct?

NO

Check the seat connector connections (**tracks 7 and 21**).
Remove the trim from the driver's seat and check that the side airbag ignition module is correctly connected.

Disconnect the side airbag ignition module, connect a dummy ignition module to the ignition module connector and measure the proper insulation for the type of fault, in **cable B** of the adapter again.
– If the value obtained is correct, replace the driver's front chest side airbag module.
– If the value obtained is still not correct, replace the wiring between **points C1 and C3** (seat wiring).

NO

Check the seat connector connections (**tracks 7 and 21**) again, as well as those of the **75-track connector (tracks 41 and 66)**.

If the fault is still present, the wiring is faulty between the computer and the driver's seat (**C0/C1**).
Replace the wiring if necessary.

AFTER REPAIR

Reconnect the computer and the ignition module of the driver's front side chest airbag module then switch on the ignition. Clear the computer fault memory then switch off the ignition.
Carry out the check again using the diagnostic tool and, if there is no fault, unlock the computer. When replacing the airbag module, do not forget to reconnect the earth on the new module. Destroy the driver's chest side airbag module if it has been replaced (tool **Elé. 1287**).

GETtheMANUALS.org

DF077 PRESENT	DRIVER'S FRONT CHEST SIDE AIRBAG CIRCUIT CC : Short circuit CO : Open circuit CC.1 : Short-circuit to + 12 volts CC.0 : Short circuit to earth

NOTES	**Priorities when dealing with a number of faults:** If fault **DF077** is present with at least one of **DF065, DF080, DF210**, begin the fault finding by checking the **28-track** under-seat connector.
	Special notes: Never carry out measuring operations on trigger lines using any tool other than CLIP or XRBAG. Use the **75-track B53 Elé. 1615** adapter for operating on the computer connector (**cable Q**) and the **28-track Elé. 1616** adapter for operating on the seat (**cable B**).

ESPACE IV

CO ***CC***	***NOTES***	None

Lock the computer using the diagnostic tool (VP006), disconnect the computer connector and fit the **75-track B53** test **adapter**. The CLIP or XRBAG tools must be used for measuring resistance on the **cable marked Q** on the adapter.
If the value obtained is correct, check the connections of the **75-track (tracks 41 and 66)** connector.

Remove the driver's seat and check the wiring on the **28-track** connector under the seat.
Repair if necessary.
Fit the **28-track** test adapter to the seat (**point C1**).
The CLIP or XRBAG tool must be used to measure the resistance in adapter **cable B**.
Is the value obtained correct?

AFTER REPAIR	Reconnect the computer and the ignition module of the driver's front side chest airbag module then switch on the ignition. Clear the computer fault memory then switch off the ignition. Carry out the check again using the diagnostic tool and, if there is no fault, unlock the computer. When replacing the airbag module, do not forget to reconnect the earth on the new module. Destroy the driver's chest side airbag module if it has been replaced (tool **Elé. 1287**).

GETtheMANUALS.org

DF077 **CONTINUED 1**	

ESPACE IV

NO	Check the seat connector connections (**tracks 7 and 21**). Remove the trim from the driver's seat and check that the side airbag ignition module is correctly connected.
	Disconnect the passenger airbag ignition module, connect a dummy ignition module to the ignition module connector then measure the resistance on **cable B** of the adapter again. – If the value obtained is correct, replace the driver's front chest side airbag module. – If the value obtained is still not correct, replace the wiring between **points C1 and C3** (seat wiring).
YES	Check the seat connector connections (**tracks 7 and 21**) again, as well as those of the **75-track connector (tracks 41 and 66)**.
	If the fault is still present, the wiring is faulty between the computer and the driver's seat (**C0/C1**). Replace the wiring if necessary.

AFTER REPAIR	Reconnect the computer and the ignition module of the driver's front side chest airbag module then switch on the ignition. Clear the computer fault memory then switch off the ignition. Carry out the check again using the diagnostic tool and, if there is no fault, unlock the computer. When replacing the airbag module, do not forget to reconnect the earth on the new module. Destroy the driver's chest side airbag module if it has been replaced (tool **Elé. 1287**).

GETtheMANUALS.org

DF077 **CONTINUED 2**	

ESPACE IV

CC.1 ***CC.0***	***NOTES***	None

Lock the computer using the diagnostic tool (VP006), disconnect the computer connector and fit the **75-track B53** test **adapter**. The CLIP or XRBAG tools must be used for measuring the insulation appropriately for the type of fault on the **cable marked Q** on the adapter.
If the value obtained is correct, check the connections of the **75-track (tracks 41 and 66)** connector.

Remove the driver's seat and check the wiring on the **28-track** connector under the seat.
Repair if necessary.
Fit the **28-track** test adapter to the seat (**point C1**).
The CLIP or XRBAG tool must be used to correctly measure the insulation for the type of fault in the adapter **cable B**.
Is the value obtained correct?

NO

Check the seat connector connections (**tracks 7 and 21**).
Remove the trim from the driver's seat and check that the side airbag ignition module is correctly connected.

Disconnect the side airbag ignition module, connect a dummy ignition module to the ignition module connector and measure the proper insulation for the type of fault, in **cable B** of the adapter again.
– If the value obtained is correct, replace the driver's front chest side airbag module.
– If the value obtained is still not correct, replace the wiring between **points C1 and C3 (seat wiring)**.

YES

Check the seat connector connections (**tracks 7 and 21**) again, as well as those of the **75-track connector (tracks 41 and 66)**.

If the fault is still present, the wiring is faulty between the computer and the driver's seat (**C0/C1**).
Replace the wiring if necessary.

AFTER REPAIR

Reconnect the computer and the ignition module of the driver's front side chest airbag module then switch on the ignition. Clear the computer fault memory then switch off the ignition.
Carry out the check again using the diagnostic tool and, if there is no fault, unlock the computer. When replacing the airbag module, do not forget to reconnect the earth on the new module. Destroy the driver's chest side airbag module if it has been replaced (tool **Elé. 1287**).

GETtheMANUALS.org

DF080 **PRESENT**	DRIVER'S LAP BELT PRETENSIONER CIRCUIT CC : Short circuit CO : Open circuit CC.1 : Short circuit to + 12 V CC.0 : Short circuit to earth

NOTES	**Priorities when dealing with a number of faults:** If fault **DF080** is present with at least one of **DF065, DF076, DF077**, begin the fault finding by checking the **28-track** under-seat connector.
	Special notes: Never carry out measuring operations on trigger lines using any tool other than CLIP or XRBAG. Use the **75-track B53 Elé. 1615** adapter for working on the computer connector (**cable K**) and the **28-track Elé. 1616** adapter for working on the seat (**cable B**).

LAGUNA II

CO ***CC***	***NOTES***	None

Lock the computer using the diagnostic tool (VP006). Switch off the ignition and check that the ignition module of the driver's lap belt pretensioner is correctly connected.
Disconnect the ignition module of the driver's lap belt pretensioner and connect a dummy ignition module to the ignition module connector. Switch on the ignition and carry out a check using the diagnostic tool. Replace the driver's lap belt pretensioner if the fault is stored (the fault is no longer declared present).
Disconnect the computer connector and fit the **75-track adapter B53**. The Clip or XRBAG tools MUST be used for checking resistance on the **wire marked K** on the adapter. If the value obtained is correct, check the connections of the **75-track (tracks 28 and 53)** connector.
Remove the driver's seat and check the wiring on the **28-track** connector under the seat (**tracks 7 and 21**). Repair if necessary. Fit the **28-track** test adapter to the seat (**point C1**). The CLIP or XRBAG must be used to measure the resistance in adapter **cable B**. If the value obtained is incorrect, the wiring is faulty between the **28-track** connector and the driver's lap belt pretensioner (**C1 and C3**). Replace the wiring if necessary. See next page.

AFTER REPAIR	Reconnect the computer and the pretensioner igniter, then switch on the ignition again. Clear the computer fault memory then switch off the ignition. Carry out the check again using the diagnostic tool and, if there is no fault, unlock the computer. Destroy the pretensioner if it has been replaced (tool **Elé. 1287**).

GETtheMANUALS.org

DF080 **CONTINUED**	

LAGUNA II

If the fault persists, the wiring is faulty between the **75-track** computer connector and the driver's seat (**C0/C1**).
Replace the wiring if necessary.

CC.1 ***CC.0***	***NOTES***	None

Lock the computer using the diagnostic tool (VP006).
Disconnect the computer connector and fit the **75-track adapter B53**.
The CLIP or XRBAG tools must be used for measuring the insulation appropriate to the type of fault on the **cable marked K** on the adapter.
If the value obtained is correct, check the connections of the **75-track (tracks 28 and 53)** connector.

If the value is not correct, remove the driver's seat and check the wiring on the **28 track** connector under the seat (**tracks 7 and 21**).
Repair if necessary.
Fit the **28-track** test adapter to the seat (**point C1**).
The CLIP or XRBAG tool must be used to correctly measure the insulation for the type of fault in the adapter **cable marked B**.
If the value obtained is incorrect, the wiring is faulty between the **28-track** connector and the driver's lap belt pretensioner (**C1 and C3**). Replace the wiring if necessary.
If the value obtained is correct, the wiring is faulty between the **75-track** computer connector and the driver's seat (**C0/C1**).
Replace the wiring if necessary.

AFTER REPAIR	Reconnect the computer and the pretensioner igniter, then switch on the ignition again. Clear the computer fault memory then switch off the ignition. Carry out the check again using the diagnostic tool and, if there is no fault, unlock the computer. Destroy the pretensioner if it has been replaced (tool **Elé. 1287**).

GETtheMANUALS.org

DF080 **PRESENT**	DRIVER'S LAP BELT PRETENSIONER CIRCUIT CC : Short circuit CO : Open circuit CC.1 : Short circuit to + 12 V CC.0 : Short circuit to earth

NOTES	**Priorities when dealing with a number of faults:** If fault **DF080** is present with at least one of **DF065, DF076, DF077**, begin the fault finding by checking the **28-track** under-seat connector.
	Special notes: Never carry out measuring operations on trigger lines using any tool other than CLIP or XRBAG. Use the **75-track B53 Elé. 1615** adapter for working on the computer connector (**cable K**) and the **28-track Elé. 1616** adapter for working on the seat (**cable C**).

VELSATIS

CO ***CC***	***NOTES***	None

Lock the computer using the diagnostic tool (VP006). Switch off the ignition and check that the ignition module of the driver's lap belt pretensioner is correctly connected.
Disconnect the ignition module of the driver's lap belt pretensioner and connect a dummy ignition module to the ignition module connector. Switch on the ignition and carry out a check using the diagnostic tool. Replace the driver's lap belt pretensioner if the fault is stored (the fault is no longer declared present).
Disconnect the computer connector and fit the **75-track adapter B53**. The Clip or XRBAG tools MUST be used for checking resistance on the **wire marked K** on the adapter. If the value obtained is correct, check the connections of the **75-track (tracks 28 and 53)** connector.
Remove the driver's seat and check the wiring on the **28-track** connector under the seat (**tracks 14 and 28**). Repair if necessary. Fit the **28-track** test adapter to the seat (**point C1**). The CLIP or XRBAG tool must be used to measure the resistance in adapter **cable C**. If the value obtained is incorrect, the wiring is faulty between the **28-track** connector and the driver's lap belt pretensioner (**C1 and C3**). Replace the wiring if necessary. See next page.

AFTER REPAIR	Reconnect the computer and the pretensioner igniter, then switch on the ignition again. Clear the computer fault memory then switch off the ignition. Carry out the check again using the diagnostic tool and, if there is no fault, unlock the computer. Destroy the pretensioner if it has been replaced (tool **Elé. 1287**).

GETtheMANUALS.org

DF080 **CONTINUED**	

VELSATIS

If the fault persists, the wiring is faulty between the **75-track** computer connector and the driver's seat (**C0/C1**).
Replace the wiring if necessary.

CC.1 ***CC.0***	***NOTES***	None

Lock the computer using the diagnostic tool (VP006).
Disconnect the computer connector and fit the **75-track adapter B53**.
The CLIP or XRBAG tools must be used for measuring the insulation appropriate to the type of fault on the **cable marked K** on the adapter.
If the value obtained is correct, check the connections of the **75-track (tracks 28 and 53)** connector.

If the value is not correct, remove the driver's seat and check the wiring on the **28-track** connector under the seat (**tracks 14 and 28**).
Repair if necessary.
Fit the **28-track** test adapter to the seat (**point C1**).
The CLIP or XRBAG tool must be used to correctly measure the insulation for the type of fault in adapter **cable C**.
If the value obtained is incorrect, the wiring is faulty between the **28-track** connector and the driver's lap belt pretensioner (**C1 and C3**). Replace the wiring if necessary.
If the value obtained is correct, the wiring is faulty between the **75-track** computer connector and the driver's seat (**C0/C1**).
Replace the wiring if necessary.

AFTER REPAIR	Reconnect the computer and the pretensioner igniter, then switch on the ignition again. Clear the computer fault memory then switch off the ignition. Carry out the check again using the diagnostic tool and, if there is no fault, unlock the computer. Destroy the pretensioner if it has been replaced (tool **Elé. 1287**).

GETtheMANUALS.org

DF080 **PRESENT**	DRIVER'S LAP BELT PRETENSIONER CIRCUIT CC : Short circuit CO : Open circuit CC.1 : Short circuit to + 12 V CC.0 : Short circuit to earth

NOTES	**Priorities when dealing with a number of faults:** If fault **DF080** is present with at least one of **DF065, DF077, DF210**, begin the fault finding by checking the **28-track** under-seat connector.
	Special notes: Never carry out measuring operations on trigger lines using any tool other than CLIP or XRBAG. Use the **75-track B53 Elé. 1615** adapter for working on the computer connector (**cable K**) and the **28 track Elé. 1616** adapter for working on the seat (**cable C**).

ESPACE IV

CO ***CC***	***NOTES***	None

Lock the computer using the diagnostic tool (VP006).
Switch off the ignition and check that the ignition module of the driver's lap belt pretensioner is correctly connected.

Disconnect the ignition module of the driver's lap belt pretensioner and connect a dummy ignition module to the ignition module connector.
Switch on the ignition and carry out a check using the diagnostic tool.
Replace the driver's lap belt pretensioner if the fault is stored (the fault is no longer declared present).

Disconnect the computer connector and fit the **75-track B53 adapter**.
The Clip or XRBAG tools MUST be used for checking resistance on the **wire marked K** on the adapter.
If the value obtained is correct, check the connections of the **75-track (tracks 28 and 53)** connector.

Remove the driver's seat and check the wiring on the **28-track** connector under the seat (**tracks 14 and 28**). Repair if necessary.
Fit the **28-track** test adapter to the seat (**point C1**).
The CLIP or XRBAG tool must be used to measure the resistance in adapter **cable C**.
If the value obtained is incorrect, the wiring is faulty between the **28-track** connector and the driver's lap belt pretensioner (**C1 and C3**). Replace the wiring if necessary.
See next page.

AFTER REPAIR	Reconnect the computer and the pretensioner igniter, then switch on the ignition again. Clear the computer fault memory then switch off the ignition. Carry out the check again using the diagnostic tool and, if there is no fault, unlock the computer. Destroy the pretensioner if it has been replaced (tool **Elé. 1287**).

GETtheMANUALS.org

DF080 **CONTINUED**	

ESPACE IV

If the fault is still present, the wiring is faulty between the **75-track** computer connector and the driver's seat (**C0/C1**).
Replace the wiring if necessary.

CC.1 ***CC.0***	***NOTES***	None

Lock the computer using the diagnostic tool (VP006).
Disconnect the computer connector and fit the **75-track adapter B53**.
The CLIP or XRBAG tools must be used for measuring the insulation appropriate to the type of fault on **cable K** on the adapter.
If the value obtained is correct, check the connections of the **75-track (tracks 28 and 53)** connector.

If the value is not correct, remove the driver's seat and check the wiring on the **28-track** connector under the seat (**tracks 14 and 28**).
Repair if necessary.
Fit the **28-track** test adapter to the seat (**point C1**).
The CLIP or XRBAG tool must be used to correctly measure the insulation for the type of fault in adapter **cable C**.
If the value obtained is incorrect, the wiring is faulty between the **28-track** connector and the driver's lap belt pretensioner (**C1 and C3**). Replace the wiring if necessary.
If the value obtained is correct, the wiring is faulty between the **75-track** computer connector and the driver's seat (**C0/C1**).
Replace the wiring if necessary.

AFTER REPAIR	Reconnect the computer and the pretensioner igniter, then switch on the ignition again. Clear the computer fault memory then switch off the ignition. Carry out the check again using the diagnostic tool and, if there is no fault, unlock the computer. Destroy the pretensioner if it has been replaced (tool **Elé. 1287**).

GETtheMANUALS.org

DF091 PRESENT	AIRBAG LOCKING SWITCH CIRCUIT CO : Open circuit CC.0 : Short circuit to earth CC.1 : Short circuit to + 12 V 1.DEF: Below minimum threshold 2.DEF: Configuration 3.DEF: Internal electronic fault

NOTES	**Special notes:** Use the **75-track B53 Elé. 1615** adapter when working on the computer connector. Lock the computer using the diagnostic tool.

CO ***CC.0*** ***CC.1*** ***1.DEF***	***NOTES***	None

Check the condition of the computer connections.
Check the condition of the **75-track** connector (locking system, connections, etc.)
Check that the locking switch is correctly connected and check its connections.
Check the continuity and insulation of the connections between:

Bornier B53 **terminal 39** → **Track 3** of the locking switch connector

Bornier B53 **terminal 64** → **Track 6** of the locking switch connector

Replace the locking switch if the fault is still present.

2.DEF	***NOTES***	None

This fault corresponds to an inconsistency between the computer configuration and the vehicle equipment detected by the computer.
The computer detects the presence of the locking switch but the computer is configured **Without**. Change the computer configuration using command **SC005 Configuration of system components**.
Correct configuration: With Passenger airbag locking with key.

AFTER REPAIR	Reconnect the computer and the locking switch, then switch on the ignition. Clear the computer fault memory then switch off the ignition. Carry out the check again using the diagnostic tool and, if there is no fault, unlock the computer.

GETtheMANUALS.org

DF091 **CONTINUED**	

3.DEF	***NOTES***	None

Replace the locking switch.

AFTER REPAIR	Reconnect the computer and the locking switch, then switch on the ignition. Clear the computer fault memory then switch off the ignition. Carry out the check again using the diagnostic tool and, if there is no fault, unlock the computer.

GETtheMANUALS.org

DF092 PRESENT	FRONT SEAT INERTIA REEL LOCKING FUNCTION CO.0 : Open circuit or short circuit to earth CC.1 : Short circuit to + 12 V 1.DEF: Configuration

NOTES	**Special notes:** Never carry out measuring operations on trigger lines using any tool other than CLIP or XRBAG. Use the **75-track B53 Elé. 1615** adapter for working on the computer connector and the **12-track Elé. 1645** adapter for working on the A computer.

CO.0	***NOTES***	This function is only present on the VELSATIS. In the event of CO.0 on the LAGUNA, change the computer configuration (SC005).

Lock the computer, disconnect the connector from the A computer, check its connections and fit **12-track bornier Elé. 1645.**
Ensure that there is **+ After ignition feed** on **track 3** and an **earth** on **track 1**.
Ensure insulation across these two connections.

Check the condition of **track 8** on the A computer connections.
Reconnect the A computer connector.
Disconnect the airbag computer connector and check the condition of its connections. Fit the **75-track B53** adapter.
Check the continuity and insulation of the connection between:

Airbag computer **track 55** ⟶ **Track 8** of the A computer

If the connection is faulty, replace the wiring between the airbag computer and the A computer.

Using **12-track Elé. 1645 bornier**, ensure that **the resistance** of the inertia reels between **tracks 5 and 6** passenger side and **11 and 12** driver's side are approximately **47.5 Ω ± 5**.
Is the resistance correct?

YES	Check the condition of the A computer connection again. Replace the A computer if the fault is still present.

AFTER REPAIR	Reconnect the airbag computer and the A computer, then switch on the ignition. Clear the computer fault memory then switch off the ignition. Carry out the check again using the diagnostic tool and, if there is no fault, unlock the computer.

GETtheMANUALS.org

DF092 **CONTINUED**	

NO	Remove the seat with the incorrect resistance and check the connections of the **28-track** connector under the seat (**tracks 6 and 27**). Fit the **28 track** test adapter on the seat to **point C1**. Measure the resistance of the seat inertia reel between **tracks 6 and 27** of the bornier. * **The resistance** is approximately **47.5 Ω ± 5**: replace the wiring between the A computer and the **28-track** connector under the seat. * **The resistance** is not approximately **47.5 Ω ± 5**: strip the seat and check that the inertia reel wiring harness is correctly connected. If the module is correctly connected, measure the resistance directly on the inertia reel motor. – **The resistance** is not approximately **47.5 Ω ± 5**: replace the seat inertia reel. – **The resistance** is approximately **47.5 Ω ± 5**: replace the module between the **28-track** connector and the seat inertia reel

CC.1	***NOTES***	None

Lock the computer (VP006), disconnect the connector from the **A** computer, check its connections and fit **the 12-track adapter**.
Ensure that there is **+ After ignition feed** on **track 3** and an **earth** on **track 1**.
Ensure insulation across these two connections.

Check the condition of **track 8** on the **A** computer connections.
Disconnect the airbag computer connector and check the condition of its connections. Fit the **75-track B53** adapter.
Check the continuity and insulation of the connection between:

Airbag computer **track 55** ⟶ **Track 8** of A computer

If the connection is faulty, replace the wiring between the airbag computer and the **A** computer.

1.DEF	***NOTES***	None

This fault corresponds to an inconsistency between the computer configuration and the vehicle equipment detected by the computer. The computer detects the presence of a connection with the A computer but the computer is configured without.
Modify the computer configuration using the **SC005 Configuration of system components** command.

AFTER REPAIR	Reconnect the airbag computer and the A computer, then switch on the ignition. Clear the computer fault memory then switch off the ignition. Carry out the check again using the diagnostic tool and, if there is no fault, unlock the computer.

GETtheMANUALS.org

DF094 to DF153 PRESENT OR STORED	COMPUTER FAULT

NOTES	None

Contact the Techline.

AFTER REPAIR	None.

GETtheMANUALS.org

DF179 PRESENT	DRIVER'S FRONT SIDE SENSOR CIRCUIT CC.0 : Short circuit to earth 1.DEF: No communication 2.DEF: Disrupted communication 3.DEF: Faulty sensor 4.DEF: Values beyond tolerance

NOTES	**Special notes:** Use the **75-track B53 Elé. 1615** adapter when working on the computer connector.

CC.0 ***1.DEF*** ***2.DEF***	***NOTES***	None

Lock the computer using the diagnostic tool (VP006).
Check that the driver's front side sensor is connected correctly and check its wiring.
Check the condition of the computer connections (**tracks 45 and 70**).
Check the condition of the **75-track** connector (locking system, connections, etc.).
Check the continuity and insulation of the connections between:

Bornier B53 **terminal 70** ⟶ **track 1** sensor connector

Bornier B53 **terminal 45** ⟶ **track 2** sensor connector

3.DEF ***4.DEF***	***NOTES***	None

Replace the driver's front side sensor.

AFTER REPAIR	Reconnect the computer and the driver's front side sensor then switch on the ignition again. Clear the computer memory then switch off the ignition. Carry out the check again using the diagnostic tool and, if there are no faults, unlock the computer.

GETtheMANUALS.org

DF180 PRESENT	PASSENGER FRONT SIDE SENSOR CIRCUIT CC.0 : Short circuit to earth 1.DEF: No communication 2.DEF: Disrupted communication 3.DEF: Faulty sensor 4.DEF: Values beyond tolerance

NOTES	**Special notes:** Use the **75-track B53 Elé. 1615** adapter when working on the computer connector.

CC.0 ***1.DEF*** ***2.DEF***	***NOTES***	None

Lock the computer using the diagnostic tool (VP006).
Check that the passenger front side sensor is connected correctly and check its wiring.
Check the condition of the connections on the computer (**tracks 46 and 71**).
Check the condition of the **75-track** connector (locking system, connections, etc.).
Check the continuity and insulation of the connections between:

Bornier B53 **terminal 71** ⟶ **track 1** sensor connector

Bornier B53 **terminal 46** ⟶ **track 2** sensor connector

3.DEF ***4.DEF***	***NOTES***	None

Replace the passenger front side sensor.

AFTER REPAIR	Reconnect the computer and the passenger's side sensor then switch on the ignition again. Clear the computer fault memory then switch off the ignition. Carry out the check again using the diagnostic tool and, if there is no fault, unlock the computer.

GETtheMANUALS.org

DF187 PRESENT	TRIGGER LINES CONFIGURATION

NOTES	None

This fault corresponds to an inconsistency between the computer configuration and the vehicle equipment detected by the computer. The computer has detected the presence of a component additional to its configuration.

Modify the computer configuration using the command **SC008 Configuration of ignition modules**.
(Note: configuration of the ignition modules covers 2 screens).

AFTER REPAIR	Clear the computer fault memory. Switch off the ignition. Carry out the check again using the diagnostic tool and, if there is no fault, unlock the computer.

GETtheMANUALS.org

DF193 STORED	PASSENGER AIRBAG LOCKING CHANGE OF STATUS

Vdiag 24, 28

NOTES	**Special notes:** The vehicle user has **10 seconds** after switching on the **+ after ignition feed** to inhibit the passenger airbag via the switch. After this time, the computer will store this fault and light up the instrument panel warning light. Switching the ignition off and on again will block this fault.

Clear the computer fault memory. Switch off the ignition, and wait a few seconds.
Switch the ignition on again and check that the fault is gone.

AFTER REPAIR	Clear the computer fault memory. Switch off the ignition. Carry out the check again using the diagnostic tool and, if there is no fault, unlock the computer.

GETtheMANUALS.org

DF193 **STORED**	PASSENGER AIRBAG LOCKING CHANGE OF STATUS

Vdiag 2C, 2D

NOTES	**Special notes:** the computer stores this fault and switches on the instrument panel warning light if the key status changes position (by means of the user's action or a problem with the switch) when the vehicle is moving at over **4 mph (7 km/h)**.

Clear the computer fault memory.
Switch the ignition on again and check that the fault is gone.

AFTER REPAIR	Clear the computer fault memory. Switch off the ignition. Carry out the check again using the diagnostic tool and, if there is no fault, unlock the computer.

GETtheMANUALS.org

DF194 PRESENT	COMPUTER TO BE REPLACED FOLLOWING IMPACT

NOTES	None

To carry out the necessary repairs:
– Run command **SC004 Read impact context** to **replace all components actuated** at the moment of impact (see **Replacement of components**).

AFTER REPAIR	None.

GETtheMANUALS.org

DF206 **PRESENT**	FRONT CURTAIN AIRBAG CIRCUIT, PASSENGER'S SIDE CC : Short circuit CO : Open circuit CC.1 : Short circuit to + 12 V CC.0 : Short circuit to earth

NOTES	**Special notes:** Never carry out measuring operations on trigger lines using any tool other than Clip or XRBAG. Use the **75-track B53 Elé. 1615 (cable T)** adapter for working on the computer connector.

CO ***CC***	***NOTES***	**Special notes:** Correct the trigger line configuration if the vehicle is not fitted with passenger front curtain airbags.

Lock the computer using the diagnostic tool (VP006). Switch off the ignition and check that the ignition module of the passenger side front curtain airbag is correctly connected.
Disconnect the ignition module from the passenger side front curtain airbag and connect a dummy ignition module to the ignition module connector. Switch on the ignition and carry out a check using the diagnostic tool. Replace the passenger side front curtain airbag if the fault becomes stored (fault no longer declared present).
Disconnect the computer connector and check the wiring on the connector **tracks 44 and 69**. Fit the **75-track B53 Elé. 1615** test adapter. The CLIP or XRBAG tools must be used for checking resistance of **cable T** of the adapter. If the value indicated is incorrect, the wiring between the computer connector and passenger front curtain airbag (**C0/C3**) is faulty. Replace the wiring if necessary.

AFTER REPAIR	Reconnect the computer and the ignition module of the passenger side front curtain airbag module then switch the ignition back on. Clear the computer fault memory then switch off the ignition. Carry out the check again using the diagnostic tool and, if there is no fault, unlock the computer. Destroy the passenger side front curtain airbag module if it has been replaced (tool **Elé. 1287**).

GETtheMANUALS.org

DF206 **CONTINUED**	

CC.1 ***CC.0***	***NOTES***	None

Lock the computer using the diagnostic tool (VP006). Switch off the ignition and check that the ignition module of the passenger side front curtain airbag is correctly connected.
Disconnect the ignition module from the passenger side front curtain airbag and connect a dummy ignition module to the ignition module connector. Switch on the ignition and carry out a check using the diagnostic tool. Replace the passenger side front curtain airbag if the fault becomes stored (fault no longer declared present).
Disconnect the computer connector and check the wiring on the connector **tracks 44 and 69**. Fit the **75-track** B53 **Elé. 1615** test adapter. The CLIP or XRBAG tools must be used for measuring the insulation appropriately for the type of fault on **cable T** of the adapter. If the value indicated is incorrect, the wiring between the computer connector and passenger front curtain airbag (**C0/C3**) is faulty. Replace the wiring if necessary.

AFTER REPAIR	Reconnect the computer and the ignition module of the passenger side front curtain airbag module then switch the ignition back on. Clear the computer fault memory then switch off the ignition. Carry out the check again using the diagnostic tool and, if there is no fault, unlock the computer. Destroy the passenger side front curtain airbag module if it has been replaced (tool **Elé. 1287**).

GETtheMANUALS.org

DF207 **PRESENT**	DRIVER`S SIDE FRONT CURTAIN AIRBAG CC : Short circuit CO : Open circuit CC.1 : Short circuit to + 12 V CC.0 : Short circuit to earth

NOTES	**Special notes:** Never carry out measuring operations on trigger lines using any tool other than CLIP or XRBAG. Use the **75 track B53 Elé. 1615 (cable S)** adapter for working on the computer connector.

CO ***CC***	***NOTES***	**Special notes:** Correct the trigger line configuration if the vehicle is not fitted with driver's side front curtain airbags.

Lock the computer using the diagnostic tool (VP006). Switch off the ignition and check that the ignition module of the driver's side front curtain airbag is correctly connected.
Disconnect the ignition module from the driver's side curtain airbag and connect a dummy ignition module to the ignition module connector. Switch on the ignition and carry out a check using the diagnostic tool. Replace the driver's side front curtain airbag if the fault becomes stored (fault no longer declared present).
Disconnect the computer connector and check the wiring on the connector (**tracks 43 and 68**). Fit the **75-track B53 Elé. 1615** test adapter. The CLIP or XRBAG tools must be used for checking resistance on **cable S** on the adapter. If the value indicated is incorrect, the wiring between the computer connector and driver's side front curtain airbag (**C0/C3**) is faulty. Replace the wiring if necessary.

AFTER REPAIR	Reconnect the computer and the ignition module of the driver's side front curtain airbag module then switch the ignition back on. Clear the computer fault memory then switch off the ignition. Carry out the check again using the diagnostic tool and, if there is no fault, unlock the computer. Destroy the driver's side front curtain airbag module if it has been replaced (tool **Elé. 1287**).

GETtheMANUALS.org

DF207 **CONTINUED**	

CC.1 ***CC.0***	***NOTES***	None

Lock the computer using the diagnostic tool (VP006). Switch off the ignition and check that the ignition module of the driver's side front curtain airbag is correctly connected.
Disconnect the ignition module from the driver's side front curtain airbag and connect a dummy ignition module to the ignition module connector. Switch on the ignition and carry out a check using the diagnostic tool. Replace the driver's side front curtain airbag if the fault becomes stored (fault no longer declared present).
Disconnect the computer connector and check the wiring on the connector (**tracks 43 and 68**). Fit the **75-track B53 Elé. 1615** test adapter. The CLIP or XRBAG tools must be used for measuring the insulation appropriately for the type of fault on **cable S** on the adapter. If the value indicated is incorrect, the wiring between the computer connector and driver's side front curtain airbag (**C0/C3**) is faulty. Replace the wiring if necessary.

AFTER REPAIR	Reconnect the computer and the ignition module of the driver's-side front curtain airbag module then switch the ignition back on. Clear the computer fault memory then switch off the ignition. Carry out the check again using the diagnostic tool and, if there is no fault, unlock the computer. Destroy the driver's side front curtain airbag module if it has been replaced (tool **Elé. 1287**).

GETtheMANUALS.org

DF208 **PRESENT**	DRIVER'S SIDE REAR CURTAIN AIRBAG CIRCUIT CC : Short circuit CO : Open circuit CC.1 : Short circuit to + 12 V CC.0 : Short circuit to earth

NOTES	**Special notes:** Never carry out measuring operations on trigger lines using any tool other than CLIP or XRBAG. Use the **75 track B53 Elé. 1615 (cable U)** adapter for working on the computer connector.

CO ***CC***	***NOTES***	**Special notes:** Correct the trigger line configuration if the vehicle is not fitted with driver's side rear curtain airbags.

Lock the computer using the diagnostic tool (VP006). Switch off the ignition and check that the ignition module of the driver's side rear curtain airbag is correctly connected.
Disconnect the ignition module from the driver's rear curtain airbag and connect a dummy ignition module to the ignition module connector. Switch on the ignition and carry out a check using the diagnostic tool. Replace the driver's side rear curtain airbag if the fault becomes stored (fault no longer declared present).
Disconnect the computer and check the wiring on the connector **tracks 47 and 72**. Fit the **75-track B53 Elé. 1615** test adapter. The CLIP or XRBAG must be used to measure the resistance in adapter **cable U**. If the value indicated is incorrect, the wiring between the computer connector and driver's side rear curtain airbag (**C0/C3**) is faulty. Replace the wiring if necessary.

AFTER REPAIR	Reconnect the computer and the ignition module of the driver's side rear curtain airbag module then switch the ignition back on. Clear the computer fault memory then switch off the ignition. Carry out the check again using the diagnostic tool and, if there is no fault, unlock the computer. Destroy the driver's side rear curtain airbag module if it has been replaced (tool **Elé. 1287**).

GETtheMANUALS.org

DF208 **CONTINUED**	

CC.1 ***CC.0***	***NOTES***	None

Lock the computer using the diagnostic tool (VP006). Switch off the ignition and check that the ignition module of the driver's side rear curtain airbag is correctly connected.
Disconnect the ignition module from the driver's rear curtain airbag and connect a dummy ignition module to the ignition module connector. Switch on the ignition and carry out a check using the diagnostic tool. Replace the driver's side rear curtain airbag if the fault becomes stored (fault no longer declared present).
Disconnect the computer and check the wiring on the connector **tracks 47 and 72**. Fit the **75-track B53 Elé. 1615** test adapter. The CLIP or XRBAG tool must be used to correctly measure the insulation for the type of fault on **cable U** of the adapter. If the value indicated is incorrect, the wiring between the computer connector and driver's side rear curtain airbag (**C0/C3**) is faulty. Replace the wiring if necessary.

AFTER REPAIR	Reconnect the computer and the ignition module of the driver's side rear curtain airbag module then switch the ignition back on. Clear the computer fault memory then switch off the ignition. Carry out the check again using the diagnostic tool and, if there is no fault, unlock the computer. Destroy the driver's side rear curtain airbag module if it has been replaced (tool **Elé. 1287**).

GETtheMANUALS.org

DF209 **PRESENT**	PASSENGER SIDE REAR CURTAIN AIRBAG CIRCUIT CC : Short circuit CO : Open circuit CC.1 : Short circuit to + 12 V CC.0 : Short circuit to earth

NOTES	**Special notes:** Never carry out any procedures on trigger lines using any tool other than CLIP, NXR or XRBAG. Use the **75 track B53 Elé. 1615 (cable V)** adapter for working on the computer connector.

CO ***CC***	***NOTES***	**Special notes:** Correct the trigger line configuration if the vehicle is not fitted with passenger side rear curtain airbags.

Lock the computer using the diagnostic tool (VP006). Switch off the ignition and check that the ignition module of the passenger side rear curtain airbag is correctly connected.
Disconnect the ignition module from the passenger side rear curtain airbag and connect a dummy ignition module to the ignition module connector. Switch on the ignition and carry out a check using the diagnostic tool. Replace the passenger side rear curtain airbag if the fault becomes stored (fault no longer declared present).
Disconnect the computer and check the wiring on the connector **tracks 48 and 73**. Fit the **75-track B53 Elé. 1615** test adapter. The CLIP or XRBAG must be used to measure the resistance on **cable V** of the adapter. If the value indicated is incorrect, the wiring between the computer connector and passenger side rear curtain airbag (**C0/C3**) is faulty. Replace the wiring if necessary.

AFTER REPAIR	Reconnect the computer and the ignition module of the passenger side rear curtain airbag module then switch the ignition back on. Clear the computer fault memory then switch off the ignition. Carry out the check again using the diagnostic tool and, if there is no fault, unlock the computer. Destroy the passenger's side rear curtain airbag module if it has been replaced (tool **Elé. 1287**).

GETtheMANUALS.org

DF209 **CONTINUED**	

CC.1 ***CC.0***	***NOTES***	None

Lock the computer using the diagnostic tool (VP006). Switch off the ignition and check that the ignition module of the passenger side rear curtain airbag is correctly connected.
Disconnect the ignition module from the passenger side rear curtain airbag and connect a dummy ignition module to the ignition module connector. Switch on the ignition and carry out a check using the diagnostic tool. Replace the passenger side rear curtain airbag if the fault becomes stored (fault no longer declared present).
Disconnect the computer and check the wiring on the connector **tracks 48 and 73**. Fit the **75-track B53 Elé. 1615** test adapter. The CLIP or XRBAG tool must be used to correctly measure the insulation for the type of fault on **cable V** of the adapter. If the value indicated is incorrect, the wiring between the computer connector and passenger side rear curtain airbag (**C0/C3**) is faulty. Replace the wiring if necessary.

AFTER REPAIR	Reconnect the computer and the ignition module of the passenger side rear curtain airbag module then switch the ignition back on. Clear the computer fault memory then switch off the ignition. Carry out the check again using the diagnostic tool and, if there is no fault, unlock the computer. Destroy the passenger's side rear curtain airbag module if it has been replaced (tool **Elé. 1287**).

GETtheMANUALS.org

DF210 PRESENT	FRONT BUCKLE PRETENSIONERS CIRCUIT CC : Short circuit CO : Open circuit CC.1 : Short circuit to + 12 V CC.0 : Short circuit to earth

NOTES	**Special notes:** the front buckle pretensioners are wired in series. Never carry out measuring on the trigger lines with any tool other than CLIP or XRBAG. Use the **75-track B53 Elé. 1615 (cable B or C)** adapter for working on the computer connector and the **28 track Elé. 1616** adapter for working on the seat (**cable A**).

CO ***CC***	***NOTES***	None

Lock the computer using the diagnostic tool (VP006). Switch off the ignition and check that the ignition module of the driver's seat buckle pretensioner is correctly connected. Disconnect the ignition module of the pretensioner and connect a dummy ignition module to the ignition module connector. Switch on the ignition and carry out a check using the diagnostic tool. Replace the driver's seat buckle pretensioner if the fault becomes stored (fault no longer declared present).
Switch off the ignition and check that the ignition module of the passenger seat buckle pretensioner is correctly connected. Disconnect the ignition module of the pretensioner and connect a dummy ignition module to the ignition module connector. Switch on the ignition and carry out a check using the diagnostic tool. Replace the passenger seat buckle pretensioner ignition module if the fault becomes stored (fault no longer declared present).'
Disconnect the computer and check the connections of the connector (**tracks 2, 3, 26 and 51**). Fit the **75-track B53 Elé. 1615** test adapter. The CLIP or XRBAG must be used to measure the resistance in adapter **cable B**. If the value obtained is incorrect, the wiring is faulty between the computer and the driver's seat buckle pretensioner ignition module (**C0/C3**).
The CLIP or XRBAG tool must be used to measure the resistance in adapter **cable C**. If the value obtained is incorrect, the wiring is faulty between the computer and the passenger seat buckle pretensioner (**C0/C3**).

AFTER REPAIR	Reconnect the computer and the buckle pretensioners then switch on the ignition again. Clear the computer fault memory then switch off the ignition. Carry out the check again using the diagnostic tool and, if there is no fault, unlock the computer. Destroy any pretensioners that have been replaced (tool **Elé. 1287**).

GETtheMANUALS.org

DF210 **CONTINUED 1**	

Remove the seat displaying the fault and check the **28-track** connector wiring under the seat (**tracks 8 and 22**).
Repair if necessary.
Fit the **28-track Elé. 1616** test adapter on the seat (**point C1**).
The CLIP or XRBAG tool must be used to measure the resistance in **cable A**.
Is the value obtained correct?

NO	Check the seat connector connections again (**tracks 8 and 22**). If the fault is still present, the wiring is faulty between the **28-track** seat connector and the buckle pretensioner of the faulty seat (**C1/C3**).
YES	Check the seat connector wiring again (**tracks 8 and 22**) on the passenger compartment wiring side as well as that of the **75-track connector (tracks 2 and 26, driver's seat or 51 and 3, passenger seat)**.
	If the fault persists, the wiring is faulty between the computer and the seat displaying the fault (**C0/C1**). Replace the wiring if necessary.

AFTER REPAIR	Reconnect the computer and the buckle pretensioners then switch on the ignition again. Clear the computer fault memory then switch off the ignition. Carry out the check again using the diagnostic tool and, if there is no fault, unlock the computer. Destroy any pretensioners that have been replaced (tool **Elé. 1287**).

GETtheMANUALS.org

DF210 **CONTINUED 2**	

CC.1 ***CC.0***	***NOTES***	None

Lock the computer using the diagnostic tool (VP006). Switch off the ignition and check that the ignition module of the driver's seat buckle pretensioner is correctly connected. Disconnect the ignition module of the pretensioner and connect a dummy ignition module to the ignition module connector. Switch on the ignition and carry out a check using the diagnostic tool. Replace the driver's seat buckle pretensioner if the fault becomes stored (fault no longer declared present).
Switch off the ignition and check that the ignition module of the passenger's seat buckle pretensioner is correctly connected. Disconnect the ignition module of the pretensioner and connect a dummy ignition module to the ignition module connector. Switch on the ignition and carry out a check using the diagnostic tool. Replace the passenger seat buckle pretensioner ignition module if the fault becomes stored (fault no longer declared present).
Disconnect the computer and check the connections of the connector (**tracks 2, 3, 26 and 51**). Fit the **75-track B53 Elé. 1615** test adapter. The CLIP or XRBAG tool must be used to correctly measure the insulation for the type of fault in adapter **cable B**. If the value obtained is incorrect, the wiring is faulty between the computer and the driver's seat buckle pretensioner ignition module (**C0/C3**).
The CLIP or XRBAG tool must be used to correctly measure the insulation for the type of fault in adapter **cable C**. If the value obtained is incorrect, the wiring is faulty between the computer and the passenger seat buckle pretensioner (**C0/C3**).

AFTER REPAIR	Reconnect the computer and the buckle pretensioners then switch on the ignition again. Clear the computer fault memory then switch off the ignition. Carry out the check again using the diagnostic tool and, if there is no fault, unlock the computer. Destroy any pretensioners that have been replaced (tool **Elé. 1287**).

GETtheMANUALS.org

DF210 **CONTINUED 3**	

Remove the seat displaying the fault and check the **28-track** connector wiring under the seat (**tracks 8 and 22**).
Repair if necessary.
Fit the **28-track Elé. 1616** test adapter on the seat (**point C1**).
Only use the CLIP or XRBAG tools to measure the insulation appropriately for the type of fault on **cable A**.
Is the value obtained correct?

NO	Check the seat connector connections again (**tracks 8 and 22**). If the fault persists, the wiring is faulty between the **28-track** seat connector and the buckle pretensioner of the faulty seat (**C1/C3**).
YES	Check the seat connector wiring again (**tracks 8 and 22**) on the passenger compartment wiring side as well as that of the **75-track connector (tracks 2 and 26, driver's seat or 51 and 3, passenger seat)**.
	If the fault persists, the wiring is faulty between the computer and the seat displaying the fault (**C0/C1**). Replace the wiring if necessary.

AFTER REPAIR	Reconnect the computer and the buckle pretensioners then switch on the ignition again. Clear the computer fault memory then switch off the ignition. Carry out the check again using the diagnostic tool and, if there is no fault, unlock the computer. Destroy any pretensioners that have been replaced (tool **Elé. 1287**).

GETtheMANUALS.org

DF242 PRESENT	LEFT-HAND DRIVE/RIGHT-HAND DRIVE CONFIGURATION

NOTES	None

This fault occurs because left-hand/right-hand drive has not been configured.
Configure the computer using command **CF291 "Driving side"**.
Read the configuration of the driving side using command **LC088 "Driving side"** under the **"Read configuration"** heading.

AFTER REPAIR	None.

GETtheMANUALS.org

NOTES	Only check conformity after a complete check using the diagnostic tool.

Order	Function	Parameter or status checked or action	Display and notes	Fault finding
1	Diagnostic tool dialogue	-	Airbag ACU 3	**ALP 1**
2	Computer conformity	Configuration reading **LC034: Vehicle type**	**LAGUNA II** **LAGUNA II ph II** **VELSATIS** **VELSATIS ph II** **ESPACE IV**	**NONE**
3	Computer configuration	Use the following commands: **SC008: Configuration of ignition modules** **SC005: System component configuration**	Ensure that the computer configuration defined in the **Current** column corresponds to the vehicle equipment.	**NONE**
		CF291: Driving side	Ensure that the computer configuration defined in configuration reading **LC088** corresponds to the vehicle type.	
4	Operation of the warning light Computer initialisation check	Ignition on	Warning light comes on for **3 seconds** when the ignition is switched on	**In the even of any problems, apply the interpretation of DF010 Fault warning light circuit.**

GETtheMANUALS.org

Tool status	Diagnostic tool title
ET072	Passenger airbag status indicator light commanded
ET073	Computer locked by tool
ET074	Fault warning light activated
ET075	Fault warning light activated as a result of impact
ET079	Faulty front inertia reel locking
ET083	Driver's seat position
ET084	All ignition modules ignited
ET085	Locking switch.
ET102	Passenger airbag locked
ET166	Passenger seatbelt contact (Vdiag 2C)
ET167	Passenger presence detected (Vdiag 2C)

Trigger line or sensor impedance is equal to **99.9 Ω** when the component is disconnected or not controlled by the computer.

GETtheMANUALS.org

Tool parameter	Diagnostic tool title
PR002	Vehicle type
PR003	Number of impacts
PR086	Number of clearances
PR100	Front inertia reel locking line voltage
PR104	Driver's seat sensor impedance
PR105	Impedance line 1 (**Driver lap belt pretensioner circuit**)
PR106	Impedance line 2 (**Passenger lap belt pretensioner circuit**)
PR107	Impedance line 3 (**Driver's side buckle pretensioner circuit**)
PR108	Impedance line 4 (**Passenger side buckle pretensioner circuit**)
PR109	Impedance line 5 (**Passenger frontal airbag circuit 1**)
PR110	Impedance line 6 (**Passenger frontal airbag circuit 2**)
PR111	Impedance line 7 (**Driver's frontal airbag circuit 1**)
PR112	Impedance line 8 (**Driver's frontal airbag circuit 2**)
PR113	Impedance line 9 (**Driver's side curtain side airbag circuit**)
PR114	Impedance line 10 (**Passenger's side curtain side airbag circuit**)
PR115	Impedance line 11 (**Driver's chest front side airbag circuit**)
PR116	Impedance line 12 (**Passenger chest front side airbag circuit**)
PR117	Impedance line 13 (**Driver's rear chest level side airbag circuit**)
PR118	Impedance line 14 (**Passenger side rear chest level side airbag circuit**)
PR122	Locking sensor circuit impedance

Trigger line or sensor impedance is equal to **99.9 Ω** when the component is disconnected or not controlled by the computer.

GETtheMANUALS.org

Tool status	Diagnostic tool title
ET072	Passenger airbag status indicator light commanded
ET073	Computer locked by tool
ET074	Fault warning light activated
ET075	Fault warning light activated as a result of impact
ET083	Driver's seat position
ET084	All ignition modules ignited
ET085	Locking switch.
ET102	Passenger airbag locked
ET166	Passenger seatbelt contact (Vdiag 2D)
ET167	Passenger presence detected (Vdiag 2D)

Trigger line or sensor impedance is equal to **99.9 Ω** when the component is disconnected or not controlled by the computer.

GETtheMANUALS.org

Tool parameter	Diagnostic tool title
PR002	Vehicle type
PR003	Number of impacts
PR086	Number of clearances
PR104	Driver's seat sensor impedance
PR105	Impedance line 1 (**Driver's lap belt pretensioner circuit**)
PR106	Impedance line 2 (**Passenger lap belt pretensioner circuit**)
PR107	Impedance line 3 (**Front buckle pretensioners circuit**)
PR109	Impedance line 5 (**Passenger frontal airbag circuit 1**)
PR110	Impedance line 6 (**Passenger frontal airbag circuit 2**)
PR111	Impedance line 7 (**Driver's frontal airbag circuit 1**)
PR112	Impedance line 8 (**Driver's frontal airbag circuit 2**)
PR113	Impedance line 9 (**Front curtain airbag circuit, driver's side**)
PR114	Impedance line 10 (**Front curtain airbag circuit, passenger's side**)
PR115	Impedance line 11 (**Driver's front side chest level airbag circuit**)
PR116	Impedance line 12 (**Passenger front side chest level airbag circuit**)
PR117	Impedance line 13 (**Driver's rear chest level side airbag circuit**)
PR118	Impedance line 14 (**Passenger's rear chest level side airbag circuit**)
PR119	Impedance line 15 (**Rear curtain airbag circuit, driver's side**)
PR120	Impedance line 16 (**Rear curtain airbag circuit, passenger's side**)
PR122	Locking sensor circuit impedance

Trigger line or sensor impedance is equal to **99.9 Ω** when the component is disconnected or not controlled by the computer.

GETtheMANUALS.org

ALP1	ABSENCE OF DIALOGUE WITH THE AIRBAG COMPUTER

NOTES	**Special note: See "Introduction, Procedure for Vdiag 2C, 2D" to enable forced + after ignition feed to run fault finding on a computer.**

Try to establish dialogue with a computer on another vehicle to make sure that the diagnostic tool is not faulty.
If the tool is not causing the fault and dialogue cannot be established with any other computer on the same vehicle, it may be that a faulty computer is disrupting fault finding line **K**.
Proceed by successive disconnections to locate this computer.
Check the battery voltage and perform the operations necessary to obtain the correct voltage (**10.5 V < battery voltage < 16 V**).

Check the presence and condition of the airbag computer supply fuse.
Check that the computer connector is properly connected and check the condition of its connections.
Check that the supply to the computer is correct:
- Disconnect the airbag computer and fit the **50 track adapter B53 (cable 1)**.
- Check and ensure the presence of **+ after ignition feed** between the terminals marked **earth** and **+ after ignition feed**.

Check that the supply to the diagnostic socket is correct:
- **+ before ignition feed** on **track 16**.
- **+ after ignition feed** on **track 1**.
- **Earth** on **tracks 4 and 5**.

Check the continuity and insulation of the lines of the diagnostic socket/airbag computer connection:
- Between the terminal marked **K** and **track 7** of the diagnostic socket.

If dialogue has still not been established after these various checks, contact the Techline.

AFTER REPAIR	When communication is established, deal with any faults indicated.

GETtheMANUALS.org

VEL SATIS

8 Electrical equipment

88D DRIVER'S SEAT

Fault finding - Customer complaints 88D - 1
Fault finding chart 88D - 3

BJ0E - BJ0J - BJ0K - BJ0M - BJ0P - BJ0V

77 11 311 302 **FEBRUARY 2006** **EDITION ANGLAISE**

"The repair procedures given by the manufacturer in this document are based on the technical specifications current when it was prepared.

The methods may be modified as a result of changes introduced by the manufacturer in the production of the various component units and accessories from which his vehicles are constructed."

All rights reserved by Renault s.a.s.

Copying or translating, in part or in full, of this document or use of the service part reference numbering system is forbidden without the prior written authority of Renault s.a.s.

© Renault s.a.s. 2006

GETtheMANUALS.org

The system consists of a seat computer which manages the position of the driver's seat and two computers in the front electric windows which manage the position of the door mirrors.
These two computers are connected by an independent multiplex network.

The 1 - 2 - 3 switches are no longer fitted and the position is stored by the Renault Card.
Pressing and holding the memory button stores the position.
Pressing it briefly recalls the position.

NOTES	Carry out fault finding on the **door management** function. Check that the door open position (driver's door) is correctly detected and that there are no **driver's seat position memory connection** faults nor any **electric window operating connection faults**. Press the driver's seat position memory button: are the states activated? Switch on the ignition.

Seat

- **The seat does not move** — **CHART 1**
- **The seat does not move in one or two directions** — **CHART 2**
- **The seat position is not stored or the recall function does not work** — **CHART 3**

Door mirrors

- **The door mirrors do not move** — **CHART 4**
- **Only one of the two door mirrors moves** — **CHART 5**
- **One of the door mirrors does not move in all directions** — **CHART 6**
- **The position of the door mirrors is not stored or the recall function does not work** — **CHART 7**
- **The fold-in or fold-out function of the door mirrors does not work** — **CHART 8**

X73memo1.0

GETtheMANUALS.org

Seat or door mirrors

The position of the door mirrors and/or the seat is not recalled when the driver's door is opened — **CHART 9**

Procedure for checking the driver's seat control pad (with position memory function) — **PRO 1**

Procedure for checking the door mirror control (with position memory function) — **PRO 2**

GETtheMANUALS.org

CHART 1	The seat does not move (in any direction)

NOTES	Carry out fault finding on the **door management** function. Check that the door open position (driver's door) is correctly detected and that there are no ***driver's seat position memory connection faults***. Check that the vehicle is configured ***with driver's seat position memory.*** Switch on the ignition. Remove the seat as a last resort.

Does the seat operate when the + relays feed is active?
(RENAULT Card half way in)

yes → Switch off the ignition with the driver's door closed. Measure the voltage on the black connector **track A8** of the seat computer.
What is the voltage?

Voltage > 0	Check the wiring. Repeat fault finding on the door management function. Replace the UCH if the fault persists.
Voltage = 0	Replace the seat computer.

no → Check the fuses in the special fusebox behind the storage compartment.
Repair if necessary.

Check the voltages on the unit:
– the two + battery feeds (black connector, **tracks B1** and **B6**),
– the + accessories feed (black connector, **track A1**),
– the earths (black connector, **tracks B3** and **B4**).

Check the passenger compartment wiring.
Repair if necessary.

See **CHART 2**

GETtheMANUALS.org

CHART 2	The seat does not move in one or two directions

NOTES	Carry out fault finding on the **door management** function. Check that the door open position (driver's door) is correctly detected and that there are no ***driver's seat position memory faults***. Press the driver's seat position memory button: are the states activated? Switch on the ignition. **Warning: remove the seat as a last resort.** Refer to the seat wiring diagram.

Check the insulation and continuity of the wiring between all of the seat control switches and the seat computer.
Repair if necessary.

↓

Remove all the control switches.
Check all the switches (see **PRO 1**).
Replace all the switches if necessary.

↓

Check the voltage (**12 V**) at the terminals of the supplied motors.
What is the voltage?

Voltage = 12V	Remove the seat. Check the insulation and continuity of the wiring between the motors and the seat computer. Replace the motors if the fault persists.

Voltage = 0 Or low	Remove the seat. Check the wiring between the motors and the seat computer. Check that the motors are not short circuited. (warning: the resistance of a motor is approximately **4.5 ohms).** Replace the seat computer if the problem persists.

AFTER REPAIR	If the seat has been disconnected, reconnect it and ensure that there are no faults on the air bag.

GETtheMANUALS.org

CHART 3	**The seat position is not stored or is not recalled** **(with the ignition on, the seat is moved after the memo button is pressed for a few seconds. The button is pressed briefly again: nothing happens)**

NOTES	Carry out fault finding on the **door management** function. Check that the door open position (driver's door) is correctly detected and that there are no ***driver's seat position memory faults***. Press the driver's seat position memory button: are the states activated? Check that the vehicle is configured ***with driver's seat position memory.*** Switch on the ignition without starting the engine. **Warning: remove the seat as a last resort.** Refer to the seat wiring diagram.

Check the insulation and continuity of the wiring between the seat computer and the keypad.
Check the keypad (see ***PRO 1***).
Repair the wiring or replace the keypad if necessary.

↓

Ignition on, driver's door closed.
Measure the voltage on the connection between the UCH (white connector, **track 32**) and the seat computer (black connector **track A8**), seat side.

Voltage > 0	Check the insulation and continuity of this connection. Repeat fault finding on the door management function. Replace the UCH if the fault persists.
Voltage = 0	Replace the seat computer.

AFTER REPAIR	If the seat has been disconnected, reconnect it and ensure that there are no faults on the air bag.

X73memo1.0

GETtheMANUALS.org

CHART 4	The door mirrors do not move (in any direction)

NOTES	Carry out fault finding on the **door management** function. Check that the door open position (driver's door) is correctly detected and that there are no ***driver's seat position memory connection faults*** nor any ***electric window operating connection faults***. Check that the vehicle is configured ***with driver's seat position memory.*** Switch on the ignition.

Check the supplies to the front electric windows (earth **track 20**, +battery feed **track 10**).

↓

If the front electric windows do not work, refer in the first instance to the section on electric windows with anti-pinch function.

↓

Check the connections between the two front electric windows (especially the multiplexed network **tracks 19** and **29** of the front electric windows).
To do this, check whether it is possible to control the passenger's electric window from the driver's door control.

↓

Switch off the ignition with the driver's door closed.
Measure the voltage on **track 27** of the passenger's electric window.
What is the voltage?

Voltage > 0	Check the insulation and continuity of the wiring between the UCH and the passenger's electric window. Repeat fault finding on the door management function. Replace the UCH if the fault persists.
Voltage = 0	Replace the passenger electric window computer.

↓

See **CHART 6**

AFTER REPAIR	Remember to reinitialize the electric windows after the repair.

X73memo1.0

GETtheMANUALS.org

CHART 5	Only one of the two door mirrors moves

NOTES	Switch on the ignition.

Check the supplies to ***both front electric windows*** (earth **track 20**, +battery feed **track 10**).

↓

Check the connections between the two front electric windows (especially the multiplex network **tracks 19** and **29** of the front electric windows).
To do this, check whether it is possible to control the passenger's electric window from the driver's door control.

↓

See **CHART 6**

AFTER REPAIR	Remember to reinitialize the electric windows after the repair.

GETtheMANUALS.org

CHART 6	One of the door mirrors does not move in all directions

NOTES	Check that the door mirrors move in at least one direction. Carry out fault finding on the **door management** function. Check that the door open position (driver's door) is correctly detected and that there are no ***driver's seat position memory connection*** *faults* nor any ***electric window operating connection faults***. Switch on the ignition.

Check the insulation and continuity of the wiring between the door mirror control and the driver's electric window as well as the control supply (earth on **track 3**).
Repair if necessary.

↓

Remove and check the door mirror control (see procedure ***PRO 2***).
Change the control if necessary.

↓

Check the wiring between the door mirror and the electric window of the door in question.
Check the door mirrors (supply the motor terminals).
Repair if necessary.

↓

Replace the electric window of the door in question if necessary.

AFTER REPAIR	Remember to reinitialize the electric windows after the repair.

GETtheMANUALS.org

CHART 7	**The door mirror position is not stored or the recall does not work** **(with the ignition on, after pressing the memo button for a few seconds, the seat moves. The button is pressed again briefly: nothing happens)**

NOTES	Carry out fault finding on the **door management** function. Check the operation of the door mirrors. Check that the door open position (driver's door) is correctly detected and that there are no ***driver's seat position memory faults***. Press the driver's seat position memory button: are the states activated? Check that the vehicle is configured ***with driver's seat position memory.*** Switch on the ignition. Remove the seat as a last resort. Check that the door mirrors are in the folded-out position.

Check the insulation and continuity of the connection between the UCH (white connector, **track 36**) and the passenger's electric window (**track 15**).

↓

Ignition on, driver's door closed.
Measure the voltage on the connection between the UCH (white connector, **track 32**) and the passenger's electric window (**track 27**) electric window side.
What is the voltage?

Voltage > 0	Check the insulation and continuity of the connection. Repeat fault finding on the door management function. Replace the UCH if the fault persists.
Voltage = 0	Replace the passenger's electric window.

AFTER REPAIR	Remember to reinitialise the electric windows after the repair.

X73memo1.0

GETtheMANUALS.org

CHART 8	The fold-in or fold-out function of the door mirrors does not work

NOTES	Check that the door mirrors move in at least one direction. Switch on the ignition.

Check the wiring between the door mirror control and the driver's electric window and the control supplies.
Repair if necessary.

↓

Remove and check the door mirror control (see procedure ***PRO 2***).
Change the control if necessary.

↓

Check the wiring between the door mirror and the electric window of the door in question.
Check the door mirrors (supply the motor terminals).
Repair if necessary.

↓

Replace the electric window of the door in question if necessary.

GETtheMANUALS.org

CHART 9	**The position of the door mirrors and/or the seat is not recalled when the driver's door is opened** **(after the vehicle was unlocked with the RENAULT Card)**

NOTES	With the ignition on, the door mirrors and seat work, as do the position memory and recall functions. Carry out fault finding on the **door management** function. Check that the vehicle is configured ***with automatic seat position recall***. Check the condition of the vehicle before reproducing the fault: – The vehicle has been locked with the RENAULT Card – The door mirror and seat controls are on stand-by (not operating) – The position has previously been modified manually (door mirrors and seats) – The door mirrors are in the **folded-out position.**

If only the seat position recall function does not work, replace the seat computer. If only the door mirror position recall function does not work, replace the front passenger electric window in the first instance. If the problem persists, replace the driver's electric window.
If the door mirror position and seat position recall functions do not work, replace the UCH in the first instance. If the problem persists, then replace the front electric windows and the seat computer.

GETtheMANUALS.org

PRO 1	Procedure for checking the driver's seat control keypad (with position memory function)

Disconnect the keypad.

Track A1 is located in the bottom left when looking at the base and when the buttons are above the base.

Press the buttons as shown below and check the required continuity.

Replace the keypad if it is faulty.

Press the switch	Measure
Raise cushion	Continuity between tracks: **A2** and **A5**
Lower seat cushion	Continuity between tracks: **A2** and **A3**
Front runner	Continuity between tracks: **A1** and **A5**
Rear runner	Continuity between tracks: **A3** and **A1**
Seatback forward	Continuity between tracks: **A6** and **A5**
Seatback reclined	Continuity between tracks: **A6** and **A3**
Move seatback forward	Continuity between tracks: **A4** and **A5**
Move seatback backwards	Continuity between tracks: **A4** and **A3**
Press the memory button	Continuity between tracks: **A2** and **A7** and **A8** and **A9**

GETtheMANUALS.org

PRO 2	**Procedure for checking the door mirror control (with position memory function)**

NOTES	This procedure only applies to checking the controls of door mirrors with position memory function.

Disconnect the control.

Track 1 is located in the top right and **track 10** in the bottom left when looking at the base and when the switch is below and to the left of the base).

Press the buttons as shown below and check the required continuity.

Replace the control if it is faulty.

Press the switch	Measure
Driver's side Upwards	Continuity between tracks: **5** and **8**
Driver's side Downwards	Continuity between tracks: **4** and **8**
Driver's side to the left	Continuity between tracks: **5** and **6**
Driver's side to the right	Continuity between tracks: **4** and **6**
Passenger's side Upwards	Continuity between tracks: **5** and **9**
Passenger side Downwards	Continuity between tracks: **4** and **9**
Passenger's side to the left	Continuity between tracks: **5** and **7**
Passenger's side to the right	Continuity between tracks: **4** and **7**
Fold-down function	Continuity between tracks: **5** and **1**

GETtheMANUALS.org

VEL SATIS

1 Engine and peripherals

13B DIESEL INJECTION

EDC16 Injection
Program No.: C1
Vdiag No.: 08, 10, 14

Fault finding - Introduction	13B - 2
Fault finding - Cleanliness guidelines	13B - 7
Fault finding - System operation	13B - 9
Fault finding - Allocation of computer tracks	13B - 17
Fault finding - Replacement of components	13B - 19
Fault finding - Fault summary table	13B - 25
Fault finding - Interpretation of faults	13B - 29
Fault finding - Conformity check	13B - 135
Fault finding - Status summary table	13B - 181
Fault finding - Interpretation of statuses	13B - 183
Fault finding - Parameter summary table	13B - 213
Fault finding - Command summary table	13B - 217
Fault finding - Interpretation of parameters	13B - 219
Fault finding - Interpretation of commands	13B - 223
Fault finding - Customer complaints	13B - 245
Fault finding - Fault Finding Chart	13B - 246
Fault finding - Tests	13B - 262

V11 **Edition Anglaise**

"The repair procedures given by the manufacturer in this document are based on the technical specifications current when it was prepared.

The procedures may be modified as a result of changes introduced by the manufacturer in the production of the various component units and accessories from which his vehicles are constructed."

All rights reserved by Renault s.a.s.

Copying or translating, in part or in full, of this document or use of the service part reference numbering system is forbidden without the prior written authority of Renault s.a.s.

© Renault s.a.s. 2012

GETtheMANUALS.org

1. SCOPE OF THIS DOCUMENT

This document presents the fault finding procedure applicable to all computers with the following specifications:

Vehicle(s): ***Vel Satis phase 1 and phase 2,***
Laguna II phase 1 and phase 2.

Engine type and suffix: **G9T600, 606**

Function concerned: **Diesel injection**

Computer name: **BOSCH EDC16 C3**

PROGRAM No.: **C1**

Vdiag No.: **08, 10, 14**

2. PREREQUISITES FOR FAULT FINDING

Documentation type

Fault finding procedures (this document):
– Assisted fault finding (integrated into the diagnostic tool), Dialogys.
Wiring Diagrams:
– Visu-Schéma (CD-ROM), paper.

Type of diagnostic tools

– **CLIP + multiplex line sensor**

Special tooling required

Special tooling required		
	Multimeter	
	Elé. 1674	**Clip + CAN probe**
	Elé. 1590	**Computer connection bornier**
Or	**Elé. 1681**	**Universal bornier**

3. REMINDERS

Procedure

To save energy, the **UCH** of **LAGUNA II phase 2 and VELSATIS phase 2 interrupts the + after ignition feed after 3 minutes**.

To run fault finding on a computer, it is possible to force the + after ignition feed on for 1 hour by applying the following procedure:
– press the unlocking button on the card,
– insert the card in the reader,
– press the Start button (interrupting the timed + after ignition feed mode),
– press and hold the start button for over 5 seconds until the engine immobiliser warning light starts to flash rapidly (4 Hz).

This forced + after ignition feed mode remains on for 1 hour.
Pressing the Start button or removing the card from the card reader cuts off the + after ignition feed but does not cut off the forced after ignition feed timed mode. Until one hour has elapsed, activating the + after ignition feed will restart forced + after ignition feed for the remaining time.

GETtheMANUALS.org

Faults

Faults are declared present or stored (depending on whether they appeared in a certain context and have disappeared since, or whether they remain present but are not diagnosed within the current context).

The **present** or **stored** status of the faults should be considered when the diagnostic tool is switched on after the + after ignition feed is switched on (with no system components being active).

For a **present fault**, apply the procedure described in the **Interpretation of faults** section.

For a **stored fault**, note the faults displayed and apply the **Notes** section.

If the fault is **confirmed** when the instructions are applied, the fault is present. Deal with the fault

If the fault is **not confirmed**, check:
- the electrical lines which correspond to the fault,
- the connectors for these lines (for oxidation, bent pins, etc.),
- the resistance of the component detected as faulty,
- the condition of the wires (melted or split insulation, wear).

Conformity check

The aim of the conformity check is to check data that does not produce a fault on the diagnostic tool because the data is inconsistent. Therefore, this stage is used to:
- carry out fault finding on faults that do not have a fault display, and which may correspond to a customer complaint.
- check that the system is operating correctly and that there is no risk of a fault recurring after repairs.

This section gives the fault finding procedures for statuses and parameters and the conditions for checking them.

If a status is not behaving normally or a parameter is outside the permitted tolerance values, consult the corresponding fault finding page.

Customer complaints - Fault finding chart

If the test with the diagnostic tool is OK but the customer complaint is still present, the fault should be processed by **Customer complaints**.

A synopsis of the general procedure to follow is provided on the following page in the form of a flow chart.

GETtheMANUALS.org

4. FAULT FINDING PROCEDURE

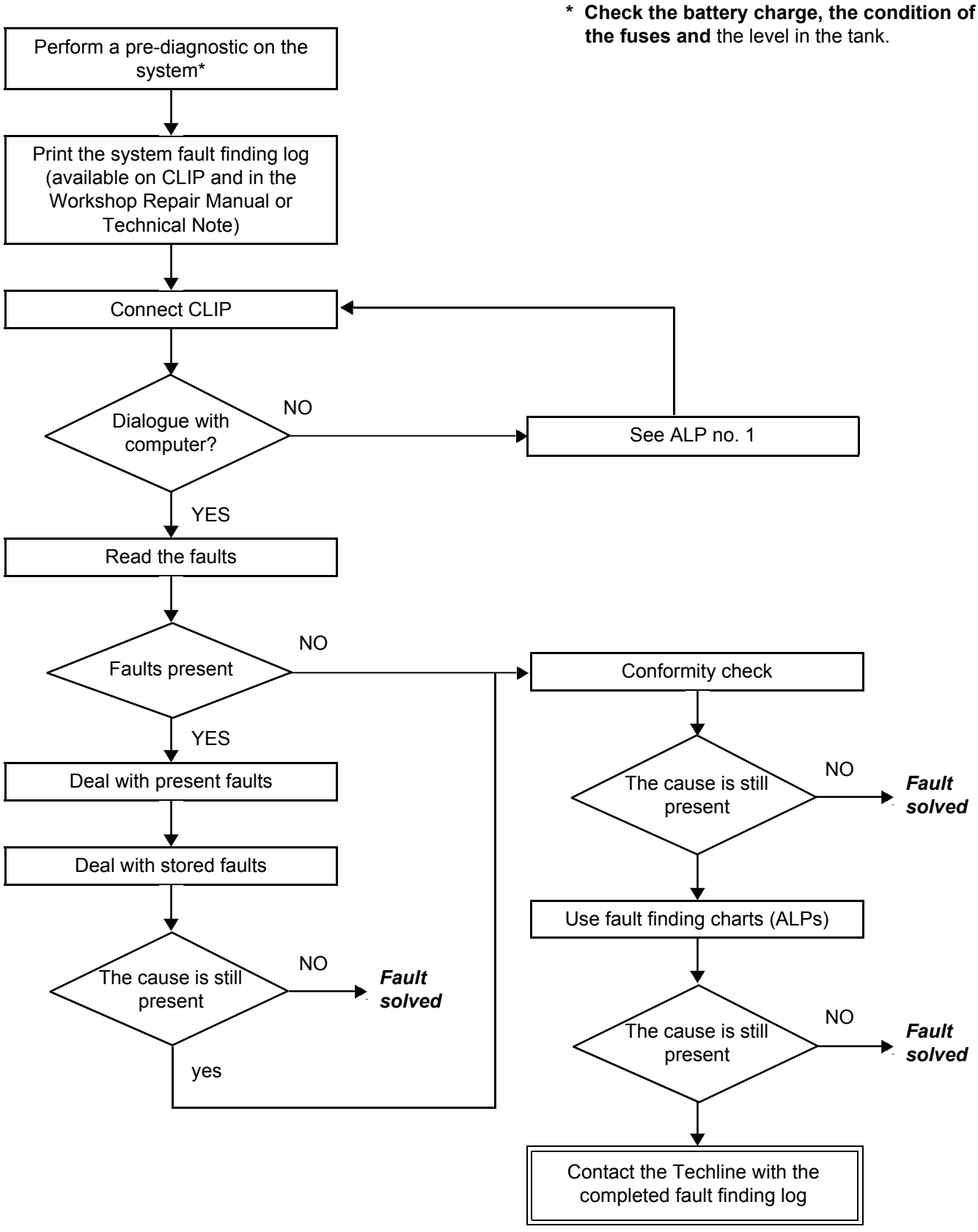

GETtheMANUALS.org

4. AULT FINDING PROCEDURE (continued)

Wiring check

Fault finding problems
Disconnecting the connectors and/or handling the wiring harness may temporarily remove, the cause of a fault.
Electrical measurements of voltage, resistance and insulation are generally correct, especially if the fault is not present when the analysis is made (stored fault).

Visual inspection
Look for damage under the bonnet and in the passenger compartment.
Carefully check the fuses, insulators and wiring harness routing.
Look for signs of oxidation.

Tactile inspection
While manipulating the wiring harness, use the diagnostic tool to note any change in fault status from stored to present.
Make sure that the connectors are properly locked.
Apply light pressure to the connectors.
Twist the wiring harness.
If there is a change in status, try to locate the source of the fault.

Inspection of each component
Disconnect the connectors and check the appearance of the clips and tabs, as well as the crimping (no crimping on the insulating section).
Make sure that the clips and tabs are properly locked in the sockets.
Check that no clips or tabs have been dislodged during connection.
Check the clip contact pressure using an appropriate model of tab.

Resistance check
Check the continuity of entire lines, then section by section.
Look for a short circuit to earth, to **+ 12 V** or with another wire.

If a fault is detected, repair or replace the wiring harness.

GETtheMANUALS.org

5. FAULT FINDING LOG

IMPORTANT

IMPORTANT
Any fault on a complex system requires thorough fault finding with the appropriate tools. The FAULT FINDING LOG, which should be completed during the procedure, enables you to keep track of the procedure which is carried out. It is an essential document when consulting the manufacturer.

IT IS THEREFORE ESSENTIAL THAT THE FAULT FINDING LOG IS FILLED OUT EVERY TIME IT IS REQUESTED BY TECHLINE OR THE WARRANT RETURNS DEPARTMENT.

You will always be asked for this log:

- when requesting technical assistance from Techline,
- for approval requests when replacing parts for which approval is mandatory,
- to be attached to monitored parts for which reimbursement is requested. The log is needed for warranty reimbursement, and enables better analysis of the parts removed.

6. SAFETY INSTRUCTIONS

Safety rules must be observed during any work on a component to prevent any damage or injury:

– check the battery voltage to avoid incorrect operation of computer functions,
– Use the proper tools.

7. CLEANLINESS ADVICE TO FOLLOW WHEN CARRYING OUT OPERATIONS ON THE HIGH PRESSURE DIRECT INJECTION SYSTEM

Risks relating to contamination

The system is highly sensitive to contamination. The risks associated with contamination are:

– damage to or destruction of the high pressure injection system and the engine,
– a component seizing or leaking.

All After-Sales operations must be performed under very clean conditions. This means that no impurities (particles a few microns in size) should be allowed to penetrate the system during dismantling or get into the circuits via the fuel unions.

The cleanliness principle must be applied from the filter to the injectors.

GETtheMANUALS.org

I - RISKS ASSOCIATED WITH CONTAMINATION

The high pressure direct injection system is highly sensitive to contamination. The risks associated with contamination are:
- damage to or destruction of the high pressure injection system,
- components jamming,
- components losing seal integrity.

All After-Sales operations must be performed under very clean conditions. This means that no impurities (particles a few microns in size) should have entered the system during dismantling.

The cleanliness principle must be applied from the filter to the injectors.

What are the sources of contamination?

- metal or plastic chips,
- paint,
- fibres:
  - from cardboard,
  - from brushes,
  - from paper,
  - from clothing,
  - from cloths,
- foreign bodies such as hair,
- ambient air
- etc.

IMPORTANT
Cleaning the engine using a high pressure washer is prohibited because of the risk of damaging connections. In addition, moisture may collect in the connectors and create electrical connection faults.

II - NOTES TO BE FOLLOWED BEFORE ANY OPERATION

IMPORTANT
Before any work is carried out on the high-pressure injection system, protect:
- the accessories and timing belts,
- the electrical accessories, (starter, alternator, electric power assisted steering pump),
- the flywheel surface, to prevent any diesel from running onto the clutch friction plate.

Check that you have plugs for the unions to be opened (set of plugs available from the Parts Department). The plugs are single-use only. After use, they must be discarded (once used they are soiled and cleaning is not sufficient to make them reusable). Unused plugs must be discarded.

GETtheMANUALS.org

Check that you have hermetically resealable plastic bags for storing removed parts. Stored parts will therefore be less subject to the risk of impurities. The bags are to be used once only, and discarded after use.

Use lint-free cleaning cloths (cloth part number **77 11 211 707**). Using normal cloth or paper is prohibited. They are not lint-free and could contaminate the fuel circuit. Each cloth should only be used once.

Use fresh cleaning agent for each operation (used cleaning agent is contaminated). Pour it into an uncontaminated container.

For each operation, use a clean brush in good condition (the brush must not shed its bristles).

Use a brush and cleaning agent to clean the unions to be opened.

Blast compressed air over the cleaned parts (tools, workbench, the parts, unions and injection system zones). Check that no bristles remain.

Wash your hands before and during the operation if necessary.

When wearing leather protective gloves cover them with latex gloves to prevent contamination.

III - INSTRUCTIONS TO BE FOLLOWED DURING THE OPERATION

As soon as the circuit is open, all openings must be plugged to prevent impurities from entering the system. The plugs to be used are available from the Parts Department. The plugs must not be reused under any circumstances.

Seal the pouch shut, even if it has to be opened shortly afterwards. Ambient air carries contamination.

All components removed from the injection system must be stored in a hermetically sealed plastic bag once they have been plugged.

Using a brush, cleaning agent, air gun, sponge or normal cloth is strictly prohibited once the circuit has been opened. These items could allow contamination to enter the system.

A new component replacing an old one must not be removed from its packaging until it is to be fitted to the vehicle.

GETtheMANUALS.org

System outline

The high pressure injection system is designed to deliver a precise quantity of diesel fuel to the engine at a set moment.

It is fitted with a **112-track BOSCH EDC16 C3 type computer**.

The system comprises:
- a priming bulb on the low pressure circuit,
- a diesel filter,
- a high pressure pump with a built-in low pressure pump (transfer pump),
- a high pressure regulator mounted on the pump,
- an injector rail,
- a diesel fuel pressure sensor built into the rail,
- four solenoid injectors,
- a diesel fuel temperature sensor,
- a coolant temperature sensor,
- a cylinder reference sensor,
- an engine speed sensor,
- a turbocharger pressure sensor,
- an accelerator pedal potentiometer,
- an exhaust gas recirculation valve,
- an atmospheric pressure sensor integrated into the injection computer,
- an air flowmeter with an air temperature sensor,
- a turbocharging pressure limitation solenoid valve,
- a damper valve,
- a particle filter,
- a particle filter differential pressure sensor,
- a particle filter upstream temperature sensor,
- a particle filter downstream temperature sensor (except Velsatis phase 2 vdiag 14).

The **Common rail** direct high pressure injection system works sequentially (based on the petrol engine multipoint injection function).

This injection system reduces operating noise, reduces the volume of pollutant gases and particles and produces high engine torque at low engine speeds thanks to a pre-injection procedure.
The high pressure pump generates the high pressure and transmits it to the injector rail. The actuator located on the pump controls the quantity of diesel fuel supplied, according to the request determined by the computer. The rail supplies each injector through a steel pipe.

GETtheMANUALS.org

a) The computer:

Determines the value of injection pressure necessary for the engine to operate correctly and then controls the pressure regulator.
Checks that the pressure value is correct by analysing the value transmitted by the pressure sensor located on the rail.
It determines the injection timing required to deliver the right quantity of diesel fuel and the moment when injection should start. Controls each injector electrically and individually after determining these two values.

The flow injected into the engine is determined by:
- the duration of injector control,
- the rail pressure (regulated by the computer),
- the injector opening and closing speed,
- the needle stroke (determined by a constant for the type of injector),
- the nominal hydraulic flow of the injector (specific to each injector).

The computer manages:
- idling regulation,
- exhaust gas flow reinjection to the inlet (EGR),
- fuel supply check (advance, flow and rail pressure),
- the fan assembly control,
- the air conditioning (cold loop function),
- the cruise control/speed limiter function,
- pre-post heating control,
- fault warning lights via the multiplex network.
- the operation of the catalysed particle filter.

The high pressure pump is supplied at low pressure by an integrated low pressure pump (transfer pump).
It supplies the rail, the pressure of which is controlled by the fuel flow actuator (MPROP) for charging, and for discharging by the injector valves. This compensates for pressure drops.
The flow actuator allows the high pressure pump to supply the exact quantity of diesel fuel required to maintain the pressure in the rail. This component minimises the heat generated and improves engine output.
In order to discharge the rail using the injector valves, the valves are controlled by brief electrical pulses which are:
- short enough not to open the injector (passing through the feedback circuit from the injectors),
- long enough to open the valves and discharge the rail.

GETtheMANUALS.org

b) Multiplex connection between the different vehicle computers.

The electronic system fitted in this vehicle is multiplexed.
This enables dialogue between the various vehicle computers. As a result:
- the fault warning lights on the instrument panel are lit by the multiplex network,
- vehicle faults are displayed by the multiplex network,
- the vehicle speed sensor on the gearbox is not needed.

The vehicle speed signal on the instrument panel is transmitted by the ABS computer via a wire connection, then sent out on the multiplex network by the instrument panel. The vehicle speed signal is used mainly by the injection computer and the airbag computer.

Some vehicles have adopted a sensor for detecting water in the diesel fuel, located in the filter. If there is water in the diesel fuel, the orange "Injection and pre-post heating" warning light will come on.

WARNING
The engine must not operate with:
- Diesel fuel containing more than 10 % diester,
- petrol, even in tiny quantities.

The system can inject diesel fuel into the engine at a pressure of up to **1600 bar**. Before each operation, check that the injector rail is depressurised and that the fuel temperature is not too high.

You must respect the cleanliness guidelines and safety advice specified in this document for any work on the high pressure injection system.
Removal of the internal parts of the pump and injectors is prohibited. Only the flow actuator, the diesel temperature sensor and the Venturi tube can be replaced.

For safety reasons, it is strictly prohibited to undo a high pressure pipe union when the engine is running.
It is not possible to remove the pressure sensor from the fuel rail because this may cause circuit contamination faults.
If the pressure sensor is faulty it must be replaced, along with the rail and the high pressure pipes.

It is strictly forbidden to remove any injection pump pulley bearing the number **070 575**. If the pump needs to be replaced, replace the pulley.
Supplying **+ 12 V** directly to any component in the system is prohibited.

Ultrasonic decoking and cleaning are prohibited.

Never start the engine unless the battery is connected correctly.
Disconnect the injection computer when carrying out any welding work on the vehicle.

GETtheMANUALS.org

c) Hosted functions:

Air conditioning management assistance:

In the case of vehicles with climate control, the EDC16 system has the option of deactivating the air conditioning via the UCH, under certain conditions of use:
- when requested by the driver,
- when starting the engine,
- if the engine overheats (in order to reduce the power the engine has to supply),
- when the engine speed is kept at a very high level (to protect the compressor),
- during transition phases (eg. high acceleration demand for overtaking, anti-stalling and moving off). These conditions are only taken into account if they do not occur repeatedly, so as to prevent system instabilities (erratic deactivation),
- when certain faults appear.

Management of the damper valve:

The damper valve currently has three functions:
- the valve closes in order to block the passage of air towards the cylinders to shut off the engine. The aim of this is to stop the engine as quickly as possible and to reduce instabilities as the engine is switched off.
- regulator valve: depending on the various engine functions, the damper valve closes by a few % in order to create a venturi effect in the EGR valve flow section. The aim of this is to accelerate the EGR gas flow rate and to reduce the emission of pollutants.
- regulatory function during the regeneration of the particle filter.

Thermoplunger management:

This vehicle is fitted with thermoplungers. They are managed and activated by the injection system. There are two types of program:
- controlled by the injection system during particle filter regeneration;
- passenger compartment function; the air conditioning requests the injection to activate one or more thermoplungers to raise the air temperature in the passenger compartment. The injection computer authorises the actuation or non-actuation of the thermoplungers according to the operating phases and the power requirements of the engine. The maximum number of thermoplungers that can be managed is four; their actuation depends mainly on the coolant temperature (< 15°C) and ambient air temperature (< 5°C).

GETtheMANUALS.org

Cruise control/speed limiter management:
The vehicle cruise control function, when activated, allows you to keep the vehicle speed at a selected value regardless of the driving conditions encountered.
Using the control buttons, the driver can increase or reduce the speed of the vehicle.

If the driver wishes to exceed the cruising speed, he may:
- depress the accelerator pedal and exceed the cruising speed (the vehicle will return to the initial cruising speed once the driver takes his foot off the pedal),
- press the system control buttons.

The cruise control function can be deselected either by:
- the system control buttons,
- deactivating the cruise control switch,
- when system events are detected, such as the brake pedal or clutch being depressed,
- when system errors are detected such as an inconsistent vehicle speed.

The cruise function can also be temporarily disabled when the driver wants to increase speed by depressing the accelerator pedal. The cruising speed is resumed when the driver releases the accelerator pedal.
The vehicle will attempt to reach the cruising speed at a controlled acceleration rate.

It is possible to reactivate the vehicle speed control and resume the last cruising speed after deactivation (computer feed not cut off).

When activated (using the selection switch) the vehicle speed limiter function limits the vehicle speed to a preselected value. The driver controls the vehicle in the normal way using the accelerator pedal until the limit speed is reached.

If an attempt is made to exceed this speed, the system ignores the pedal request and controls the vehicle speed in the same way as the cruise control function, provided that the driver keeps the accelerator pedal sufficiently depressed.
As with cruise control, the limit speed can be altered using the one-touch control buttons or by pressing and holding.

For safety reasons, it is possible to exceed the limit speed by depressing the accelerator pedal and exceeding the pedal position limit value. The vehicle speed is then totally controlled as a function of pedal position until the speed falls back below the limit speed when the speed limiter function will once again be reactivated.

If the driver wishes to exceed the cruising speed, he may:
- exceed the accelerator pedal's kickdown point,
- increase the limit speed by pressing or pressing and holding the limit speed switch.

The speed limiter function can be deselected either:
- the system control buttons,
- by switching off the speed limiter switch,
- when system events are detected, such as the brake pedal or clutch being depressed,
- when system errors are detected such as an inconsistent vehicle speed.

GETtheMANUALS.org

Exhaust gas recirculation management

The exhaust gas recirculation system comprises a direct current EGR valve controlled by an H bridge in the computer. This system has a built-in valve position feedback potentiometer.
The EGR valve is controlled in a closed loop on the change in the air flow measured by the flow sensor.
The potentiometer is used in the fault finding procedure for the EGR valve position.
An EGR by-pass is used to cool the exhaust fumes before they are redirected to the inlet, when the engine coolant temperature permits.

Particle filter management

The particle filter eliminates the emission of carbon particles, up until now, not removed from the exhaust fumes.

The particle filter is a porous structure containing channels arranged so as to force-filter the exhaust gases.

The particle filter consists of several components:
- an oxidation pre-catalytic converter after the turbocharger to achieve the HC/CO levels of the current standards,
- the particle filter located under the body,
- a differential pressure sensor to tell the computer the pressure upstream and downstream of the particle filter,
- a temperature sensor upstream and downstream of the particle filter (except VELSATIS phase 2 Vdiag 14 which is not fitted with a temperature sensor downstream of the particle filter).

While driving the particle filter fills with particles (soot) and, above a given mass of soot, it is necessary to clean it by the principle of regeneration.

This regeneration consists of burning the particles accumulated in the filter.

The differential pressure sensor informs the computer about the weight of the soot contained in the particle filter.

The computer then orders the regeneration. The engine combustion is then delayed to raise the exhaust gas temperature to between **550 and 650°C**.
This temperature allows the particles to be burned and the particle filter to be regenerated.

Regeneration may be automatically triggered when driving if the soot content is below:
- **45 g for Vdiag 08 and 10,**
- **48 g for Vdiag 14.**

If the weight of soot is greater than **45 g for Vdiag 08 and 10, or 48 g for Vdiag 14**, or if regeneration could not be carried out when driving, the user should request **After-Sales regeneration**.

This regeneration is carried out in the workshop. It is essential to follow the instructions given in the interpretation of the command (**SC017 Particle filter regeneration**) to carry out regeneration in complete safety (see **Technical Note 5040A**).

IMPORTANT
The particle filter must be replaced after a period of time which largely depends on the grade of engine oil used - this information is in the Driver's handbook.

After it has been replaced, it is essential to reconfigure certain parameters in the computer (see **SC036 Reinitialise programming**).

GETtheMANUALS.org

Warning light management:

Instrument panel display
The computer manages the data display on the instrument panel relating to engine operation. This involves six functions:
- the pre-postheating warning light,
- the coolant temperature warning light or warning message;
- the fault level 1 warning light (non-critical fault),
- the fault level 2 warning light (emergency stop),
- the OBD warning light (European On Board Diagnostic),
- particle filter warning message or light.

These six functions are represented by 4 or 5 warning lights and/or messages displayed by the trip computer.

A **3-second** visual inspection (automatic test procedure managed by the instrument panel) is carried out by the injection computer when the ignition is switched on.

Orange pre-post heating/non-critical fault SERVICE warning light (severity 1)
This light is used both as an in-operation indicator light and as a system fault indicator:
- Continuously lit with + after ignition feed:

Indicates preheating of the spark plugs.
- Continuously lit with **CHECK INJECTION or ELECTRONIC FAULT**:

Indicates a **level 1** fault (implies operation in injection system defect mode).
The driver should carry out repairs as soon as possible.

Temperature/red emergency STOP (level 2) warning light
This indicator light is used both as an in-operation indicator light and as a system fault warning light. Lights up for **3 seconds** when the ignition is switched on (automatic test procedure managed by the instrument panel):
- Continuously lit **or** alternately lit with **ENGINE OVERHEATING** message:

Indicates engine overheating (the driver is free to choose whether or not to stop the vehicle).
- Continuously lit with the **FAULTY INJECTION** message:

Indicates a **level 2** fault (In this case, the injection is automatically cut after a few seconds).
The driver should carry out repairs as soon as possible.

ORANGE OBD excess pollution warning light
An engine symbol accompanied by the message **CHECK EMISSION CONTROL**.
This warning light comes on if the system has one or more OBD faults.
This warning light is used to alert the driver of the existence of injection faults leading to excessive pollution or if the EOBD (European On Board Diagnostic) system is deactivated.
The injection computer requests activation of the OBD warning light for a present fault only after three successive driving cycles.
The **3 second** visual inspection when the ignition is switched on (automatic test procedure managed by the instrument panel) is carried out by the injection computer.

Special particle filter ORANGE warning light or warning message (depending on instrument panel)
This warning light or message warns the driver that the particle filter is full of particles (weight of soot greater than **40 g for Vdiag 08 and 10, or 42 g for Vdiag 14**, or that there are too many regeneration faults due to driving conditions which are unfavourable for regeneration). The driver must then drive as soon as possible at an average speed of 48 mph (80 km/h) subject to the road conditions and authorised speed limits.

WARNING

This warning light does not exist on the **LAGUNA II phase 1 and VELSATIS phase 1**.

This warning light is replaced by a **Regenerate particle filter** message displayed by the trip computer.

GETtheMANUALS.org

Management of the EOBD:

The **OBD (On Board Diagnostic)** system permits detection of any faults relating to the vehicle emission control system (OBD EURO IV emission control standards being exceeded).
This system should be active for the entire life of the vehicle.

1. OBD fault display conditions

An OBD fault will be detected after **3 driving cycles** and the following parameters will be registered in the computer:
- engine load,
- vehicle speed
- air temperature
- coolant temperature,
- turbocharging pressure,
- rail pressure,
- air flow,
- distance travelled in miles by the vehicle since activation of the **OBD** warning light.

It allows the driver to know whether the vehicle has a fault directly linked to the emission control system.

2. System faults displayed by the OBD

Only a few faults are indicated by the OBD system:
- **DF012 Sensor feed voltage no. 2.**
- **DF038 Computer in 6.DEF EEPROM fault.**
- **DF040 Cylinder 1 injector circuit in CO Open circuit.**
- **DF041 Cylinder 2 injector circuit in CO Open circuit.**
- **DF042 Cylinder 3 injector circuit in CO Open circuit.**
- **DF043 Cylinder 4 injector circuit in CO Open circuit.**
- **DF054 Turbocharging solenoid valve control circuit in CC.0 Short circuit to earth.**
- **DF209 EGR valve position sensor circuit.**
- **DF621 EGR valve jammed open.**

Some repair operations require programming to ensure that certain engine components function correctly. Follow the programming procedures (see Replacement of components), if replacing an exhaust gas recirculation valve or an injector.

3. OBD fault clearing conditions

An OBD fault is cleared in several steps.
The fault **present** in the diagnostic tool is not **stored** (following repair) until after 3 trips with the vehicle.
The OBD warning light will only light up after these 3 driving cycles.
The instrument panel warning light coming on does not automatically mean that the system has a fault.
In order that the OBD fault and the display parameters are cleared from the computer, the system needs to go through 40 engine heating cycles.
An engine heating cycle is a driving cycle during which:
- **the engine coolant temperature reaches at least 71.1°C,**
- **the engine coolant temperature varies by 22.2°C in relation to the engine starting temperature.**

If one of these conditions is not fulfilled, the OBD fault will still be present or stored on the injection computer.

GETtheMANUALS.org

1 - Black 32-track connector A

Track	Description
A1	Not used
A2	Cruise control on/off switch
A3	Passenger compartment multiplex network L1 signal
A4	Passenger compartment multiplex network H1 signal
B1	Air conditioning cut-off control
B2	Engine speed signal
B3	Not used
B4	K line diagnostic socket output
C1	Not used
C2	Not used
C3	Speed limiter on/off switch
C4	Clutch contact input
D1	Fuse protected + after ignition feed
D2	Cruise control programming control
D3	Cruise control programming feedback signal
D4	Fuel flow signal
E1	Not used
E2	Air conditioning cycle control
E3	Heated windscreen activation signal
E4	Normally-closed brake switch input
F1	Not used
F2	Accelerator potentiometer load 2 supply
F3	Accelerator potentiometer load 2 signal
F4	Accelerator potentiometer load 2 earth
G1	Injection computer feed voltage relay + after ignition feed
G2	Accelerator potentiometer load 1 supply
G3	Not used
G4	Battery earth
H1	Battery earth
H2	Accelerator potentiometer load 1 signal
H3	Accelerator potentiometer load 1 earth
H4	Battery earth

2 - Brown 48-track connector B

Track	Description
A1	Camshaft sensor earth (cylinder 1 reference) and particle filter upstream temperature sensor
A2	Additional heating fault finding signal
A3	Not used
A4	Fuel rail pressure sensor feed
B1	TDC sensor feed signal (engine speed)
B2	Damper valve fault finding
B3	Not used
B4	Air flow sensor feed
C1	TDC sensor earth signal (engine speed)
C2	EGR valve motor supply signal
C3	Engine multiplex line H2 network signal (automatic gearbox)
C4	Fuel rail pressure sensor earth
D1	Camshaft sensor signal (cylinder reference 1)
D2	EGR valve motor earth signal
D3	Engine multiplex line L2 network signal (automatic gearbox)
D4	Turbocharger pressure sensor earth
E1	Injection supply main relay control
E2	Air temperature and air flow sensor earth signal
E3	Not used
E4	Not used
F1	Not used
F2	Coolant temperature sensor feed signal
F3	Not used
F4	EGR valve position potentiometer feed
G1	Air flow sensor feed signal
G2	Air temperature signal
G3	Fuel rail pressure sensor signal
G4	Turbocharging pressure sensor and particle filter differential pressure sensor feed
H1	Coolant temperature sensor earth
H2	Fuel temperature signal
H3	Particle filter upstream temperature sensor signal
H4	Not used

GETtheMANUALS.org

2 - Brown connector B, 48-track (continued)

Track	Description
J1	Not used
J2	EGR valve position potentiometer signal
J3	Not used
J4	Damper valve solenoid valve control
K1	Not used
K2	Turbocharger pressure sensor signal
K3	Particle filter sensor signal (except VELSATIS phase 2 Vdiag 14)
K4	Heating element no. 1 relay control
L1	Not used
L2	Not used
L3	EGR by-pass solenoid valve control
L4	Flow sensor earth
M1	Swirl flap - control (except VELSATIS phase 2 Vdiag 14)
M2	Injection computer feed voltage relay + after ignition feed
M3	Heating element no. 3 relay control
M4	Fuel pressure regulation solenoid valve control (fuel flow actuator)

3 - grey connector C, 32-track

Track	Description
A1	Heating element no. 2 relay control
A2	Water in diesel detection sensor signal Alternator charge signal
A3	Preheating unit diagnostic signal
A4	Fan unit relay 1 - control
B1	Particle filter differential pressure sensor signal.
B2	Brake switch input (closed)
B3	Not used
B4	Fuel low pressure pump relay control
C1	EGR valve position potentiometer earth
C2	Not used
C3	Not used
C4	Not used
D1	Not used
D2	Not used
D3	Not used
D4	Turbocharging pressure solenoid valve control
E1	Preheating unit control
E2	Particle filter downstream temperature
E3	sensor earth (except VELSATIS phase 2 Vdiag 14)
E4	Turbocharger upstream temperature sensor feed
F1	Fuel temperature earth
F2	Fan unit relay 2 control
F3	Particle filter differential pressure sensor earth.
F4	Not used
G1	Injector 4 feed
G2	Injector 2 feed
G3	Injector 1 control
G4	Injector 2 control
H1	Injector 1 feed
H2	Injector 3 feed
H3	Injector 4 control
H4	Injector 3 control

GETtheMANUALS.org

COMPUTER REPLACEMENT OR REPROGRAMMING

IMPORTANT
- **Switch on the diagnostic tool (mains or cigarette lighter supply).**
- **Connect a battery charger.**
- **Switch off all electrical consumers (lights, interior lights, air conditioning, radio/CD, etc.).**
- **Wait for the engine to cool (engine coolant temperature < 60 °C and air temperature < 50 °C).**
- During (re)programming, the instrument panel screen may display **OIL PRESSURE FAULT**. Ignore this message and do not take any action in connection with it.

Two operations must be performed when replacing or reprogramming the computer:
SC003 Save computer data and SC001 Write saved data.
- Run command **SC003 before replacing or reprogramming** the computer. This enables certain data to be saved **in the diagnostic tool** so that the new computer* can be reconfigured like the old one. The saved data includes: injector codes, EGR programming, specific data for particle filter operation and vehicle options.
- Run command **SC001 after replacing or reprogramming** the computer. It enables you to rewrite the data (saved by command **SC003**) to the new computer*.

If you cannot establish dialogue with the computer being replaced: you will not be able to save anything.
After replacing the computer:
- Manually enter the IMA code for each injector by reading the injector codes (see **REPLACING INJECTORS**).
- Enter the data specific to particle filter operation by running **SC036 Reinitialise programming** and select **After replacing injection computer with no save option**.

Exhaust gas recirculation valve data is programmed automatically the 1st time the new computer is switched on*.

** New computer or reprogrammed computer.*

GETtheMANUALS.org

PROCEDURE

● **Before replacing or reprogramming the computer:**

– select **SC003 Save computer data**;
– if the following message appears: "**A saved file exists. Overwrite?**": (this file corresponds to the last save carried out on the tool),
– select **YES**,

When the backup is complete, replace the computer or reprogram, then proceed to the next step.

● **After replacing or reprogramming the computer:**

– select **SC001 Write saved data**, then follow the instructions given by the diagnostic tool,
– if the VIN has not been stored (see **Computer Identification** on the main screen), select **VP010 Enter VIN**,

When both these commands have finished:

– **switch off the ignition**, and wait for the following message to appear on the **diagnostic tool: "Loss of dialogue with the computer: EDC16 C3, check the connection of the tool and the computer supply voltage"** before switching the ignition back on,
– check the system faults, and clear any stored faults,
– if there are no stored faults, deal with present faults;
– clear the faults from the computer memory.

Carry out a road test followed by a complete check with the diagnostic tool.

IMPORTANT

– The injection computer retains the same immobiliser code for life.
– The system has no security code.
– It is not permitted to perform tests with computers borrowed from the Parts Department or from another vehicle which must then be returned.
– These computers are hard-coded.
– If the injection computer appears to be faulty, contact the Techline and refer to the fault finding log.

End of operation.

GETtheMANUALS.org

REPLACING THE INJECTORS

Note:
The IMA coding (individual injector correction) is a calibration made in production on **each injector** to **adjust the flow** accurately.
These correction values are etched on the Bakelite body of each injector (6 alphanumeric characters) and then entered into the computer which then controls each injector taking into account their **manufacturing variation**.

After replacing one or more injectors, re-enter the IMA codes.
The system must be configured via the diagnostic socket using the RENAULT CLIP diagnostic tool.

⟶ **PROCEDURE** to be followed **after one or more injectors have been replaced**:

IMPORTANT
Cylinder no. 1 is located **at the engine flywheel end**.
– make a note of the **IMA** code(s) engraved on the injector body,
– enter these codes in the computer using command **SC002 Enter injector codes**, then follow the instructions given by the diagnostic tool,
– once the command has finished,
– switch off the ignition,
– wait for the following message to appear on the **diagnostic tool: "Loss of dialogue with the computer: EDC16 C3, check the connection of the tool and the computer supply voltage"** before switching the ignition back on,
– return to fault finding mode,
– select the **Computer identification** function from the main screen,
– check that the injector codes entered into the computer match those found on the bodies of the injectors:
– if the codes do not match, restart the command **SC002 Enter injector codes** procedure.
– if the codes do match, check system faults and clear any stored faults;
– if there are no stored faults, deal with present faults;
– clear the faults from the computer memory.

Carry out a road test followed by a complete check with the diagnostic tool.

IMPORTANT
Engines can only operate correctly if the correct IMA codes have been entered.
If no codes have been entered or if an invalid code has been entered, fault DF276 Program injector code is present and the engine will be in defect mode (significant engine speed restriction).
If another injector's code has been entered, the system will accept it but will make the wrong correction. This could lead to engine damage, loss of performance and excessive pollution. Always use the correct injector codes for the engine cylinder/computer.

End of operation.

GETtheMANUALS.org

REPLACING THE EXHAUST GAS RECIRCULATION VALVE (EGR valve)

After the exhaust gas recirculation valve has been replaced, the computer must store the new valve's offset and the offset measured the last time the ignition was switched off, which is when the valve closed.
Using this data, the computer can detect whether the valve is clogged or seized.
When the valve is replaced, clear the stored offsets so that the program uses the new valve's offset value.

The data linked to this program is compiled in the **Emission control/OBD** sub-function.
- **PR128:** FIRST EGR VALVE OFFSET.
- **PR129:** LAST EGR VALVE OFFSET > or = **PR128 if the valve is new**.

Programming **PR128** and **PR129** must be cleared every time the exhaust gas recirculation valve is replaced.

⟶ **PROCEDURE** to be followed **after replacing** the exhaust gas recirculation valve:

– run command **SC036 Reinitialise programming**;
– select **EGR valve** as the type of operation, then follow the instructions given by the diagnostic tool,

Note:
When the reinitialisation is complete, the **Emission control/OBD** sub-function displays:
PR128 = PR129 > 100 %

– when the command is finished;
– switch off the ignition,
– wait for the following message to appear on the **diagnostic tool: "Loss of dialogue with the computer: EDC16 C3, check the connection of the tool and the computer supply voltage"** before switching the ignition back on,
When the ignition is next switched on again the new EGR valve offset is automatically reprogrammed.

Note:
When the new EGR valve offset has been reprogrammed, then the **Emission control/OBD** sub-function displays:
10 % < PR128 < 40 %
PR129 > 100 %

– start the vehicle to enable the latest EGR valve offset to be programmed,
– switch off the ignition,
– wait for the following message to appear on the **diagnostic tool: "Loss of dialogue with the computer: EDC16 C3, check the connection of the tool and the computer supply voltage"** before switching the ignition back on.
The last EGR valve offset reprogrammed is stored on the computer.

Note:
When the reprogramming of the last EGR valve offset has been done, then the **Emission control/OBD** sub-function displays:
10 % < PR128 < 40 %
10 % < PR129 < 40 %
and PR129 - PR128 ≥ -1 % and ≤ 5 %

– then check the system faults, and clear any stored faults;
– if there are no stored faults, deal with present faults;
– clear the faults from the computer memory.
Carry out a road test followed by a complete check with the diagnostic tool.

End of operation.

GETtheMANUALS.org

REPLACING THE DAMPER VALVE

After replacing the damper valve, reconfigure the computer.
The system must be configured via the diagnostic socket using the RENAULT CLIP tool.

- **PROCEDURE** to be followed **after the damper valve is replaced**:

– switch on the ignition,
– establish dialogue with the injection computer,
– run command **SC036 Reinitialise programming**;
– select **Damper valve** as the type of operation, then follow the instructions given by the diagnostic tool;
– **switch off the ignition,**
– wait for the following message to appear on the **diagnostic tool: "Loss of dialogue with the computer: EDC16 C3, check the connection of the tool and the computer supply voltage"** before switching the ignition back on,
– check that **PR420 Damper valve error counter = 0**;
– then check the system faults, and clear any stored faults;
– if there are no stored faults, deal with present faults;
– clear the faults from the computer memory.

Carry out a road test followed by a complete check with the diagnostic tool.

End of operation.

REPLACING THE PARTICLE FILTER:

After replacing the particle filter, reconfigure the computer.

The system must be configured via the diagnostic socket using the RENAULT CLIP tool.

- **PROCEDURE** to be followed **after the particle filter is replaced**:

– switch on the ignition,
– run command **SC036 Reinitialise programming**;
– select **After particle filter replacement** as the operation type, then follow the instructions,
– **switch off the ignition and wait** for the following message to appear on the **diagnostic tool: "Loss of dialogue with the computer: EDC16 C3, check the connection of the tool and the computer supply voltage",**
– **then switch on the ignition again,**
– **clear** the faults from the computer memory **(this operation must be carried out within 3 minutes of the ignition being switched on)**.

Carry out a road test followed by a complete check with the diagnostic tool.

End of operation.

GETtheMANUALS.org

Summary of available configuration readings

NOTES	Configuration readings are used to check the status of configurations performed. The configuration readings cannot be changed. The computer is configured as soon as the one of the vehicle's optional system components is operated. In the event of a fault, consult the interpretation of command **RZ005 PROGRAMMING**.

LC009: Air conditioning
WITH OR WITHOUT

LC056: Heating elements
WITH OR WITHOUT

LC065: Water in diesel fuel sensor
WITH OR WITHOUT

LC120: Cruise control
WITH OR WITHOUT

LC121: Speed limiter
WITH OR WITHOUT

GETtheMANUALS.org

WARNING LIGHT MANAGEMENT:
Management of instrument panel warning lights according to the faults notified.

Tool fault	Description	Associated DTC	LEVEL 1 FAULT WARNING LIGHT (Orange heater plugs On indicator light)	LEVEL 2 FAULT WARNING LIGHT (Red overheating warning light)	NO WARNING LIGHT ON	OBD WARNING LIGHT ON
DF001	Coolant temperature sensor circuit	115	CO.1/CC.0	...	...	...
DF003	Atmospheric pressure sensor circuit	105 or 2226	1.DEF/2.DEF/3.DEF	...	...	...
DF004	Turbocharging pressure sensor circuit	235	CO.0/CC.1	...	1.DEF	...
DF005	Engine speed sensor circuit	335	...	1.DEF/2.DEF	...	...
DF007	Rail pressure sensor circuit	190	...	CO.1/1.DEF/2.DEF	CC.0	...
DF008	Pedal potentiometer circuit gang 1	225	CO.0/CC.1/1.DEF	...	...	...
DF009	Pedal potentiometer circuit gang 2	2120	CO.0/CC.1/1.DEF	...	...	...
DF011	Sensor feed voltage no. 1	641	1.DEF/2.DEF	...	...	...
DF012	Sensor feed voltage no. 2	651	1.DEF/2.DEF	...	...	1.DEF/ 2.DEF
DF013	Sensor supply voltage no. 3	697	...	1.DEF/2.DEF	...	...
DF015	Main relay control circuit	685	1.DEF/2.DEF	...	...	...
DF017	Pre-postheating unit control circuit	380	CC.0	...	CC.1/CO/ 1.DEF	...
DF025	Preheating unit diagnostic line	670	X	...	...	...
DF037	Engine immobiliser	C167	...	...	X	...
DF038	Computer	606	5.DEF/13.DEF	1.DEF/2.DEF/ 3.DEF/4.DEF/ 6.DEF/7.DEF/ 8.DEF/10.DEF/ 11.DEF/12.DEF/ 14.DEF	...	6.DEF

GETtheMANUALS.org

Tool fault	Description	Associated DTC	LEVEL 1 FAULT WARNING LIGHT (Orange heater plugs On indicator light)	LEVEL 2 FAULT WARNING LIGHT (Red overheating warning light)	NO WARNING LIGHT ON	OBD WARNING LIGHT ON
DF039	Inlet air temperature sensor circuit	110	...	...	CC.0/CO.1	...
DF040	Cylinder 1 injector circuit	201	CO	CC.1/CC/1.DEF	...	CO
DF041	Cylinder 2 injector circuit	202	CO	CC.1/CC/1.DEF	...	CO
DF042	Cylinder 3 injector circuit	203	CO	CC.1/CC/1.DEF	...	CO
DF043	Cylinder 4 injector circuit	204	CO	CC.1/CC/1.DEF	...	CO
DF046	Battery voltage	560	...	...	1.DEF/2.DEF/ 3.DEF	...
DF047	Computer feed voltage	615	...	...	1.DEF	...
DF050	Brake switch circuit	571	...	...	1.DEF/2.DEF	...
DF051	Cruise control/speed limiter function	575	...	...	1.DEF/2.DEF/ 3.DEF	...
DF053	Rail pressure regulation function	89	3.DEF	CC.0/CC.1/CO/ 1.DEF/ 2.DEF/ 5.DEF/6.DEF/ 7.DEF	4.DEF	...
DF054	Turbocharging solenoid valve control circuit	33	C0/CC.1/CC.0/ 1.DEF	...	...	CC.0
DF055	Turbocharging pressure regulation circuit	243	1.DEF/2.DEF	...	...	...
DF056	Air flowmeter circuit	100	3.DEF/4.DEF	...	CO.0/CC.1/ 1.DEF/2.DEF	...
DF057	Water in diesel fuel detector circuit	2264	...	...	X	...
DF069	Impact detected signal	1620	...	...	X	...
DF070	Clutch switch circuit	830	...	...	1.DEF/2.DEF	...
DF091	Vehicle speed signal	500	...	...	1.DEF/2.DEF/ 3.DEF/4.DEF	...

GETtheMANUALS.org

Tool fault	Description	Associated DTC	LEVEL 1 FAULT WARNING LIGHT (Orange heater plugs On indicator light)	LEVEL 2 FAULT WARNING LIGHT (Red overheating warning light)	NO WARNING LIGHT ON	OBD WARNING LIGHT ON
DF097	Camshaft sensor circuit	340	...	...	1.DEF/2.DEF	...
DF098	Fuel temperature sensor circuit	180	...	...	CC.0/CO.1	...
DF114	EGR solenoid valve circuit	400	...	...	1.DEF	...
DF118	EGR solenoid valve servo-control	409	...	...	1.DEF/2.DEF	...
DF176	Low-speed fan unit circuit	480	CO/CC.0/CC.1/ 1.DEF	...	...	...
DF177	High-speed fan unit circuit	481	CO/CC.0/CC.1/ 1.DEF	...	...	...
DF195	Camshaft sensor/ engine speed consistency	16	1.DEF	...	...	...
DF209	EGR position sensor circuit	486	...	...	CC.1/CO.0	CC.1/ CO.0
DF226	Damper valve circuit	638	CO/CC.0/CC.1/CC/ 1.DEF/2.DEF/ 3.DEF/4.DEF	...	...	...
DF227	Turbulence flap (only affects Vdiag 08)	660	CC.0 / CC.1	...	...	...
DF238	Heating element no. 3 relay circuit	1643	CO/CC.0/CC.1/ 1.DEF	...	...	...
DF239	Heating element no. 2 relay circuit	1642	CO/CC.0/CC.1/ 1.DEF	...	...	...
DF240	Heating element no. 1 relay circuit	1641	CO/CC.0/CC.1/ 1.DEF	...	...	...
DF250	ESP function	C122	...	...	1.DEF/2.DEF	...
DF272	EGR control circuit	403	1.DEF/2.DEF	...	...	...
DF276	Injector code programming	611	1.DEF/2.DEF	...	...	...
DF304	EGR by-pass circuit	2169	CO/CC.0/CC.1/ 1.DEF	...	...	...

GETtheMANUALS.org

Tool fault	Description	Associated DTC	LEVEL 1 FAULT WARNING LIGHT (Orange heater plugs On indicator light)	LEVEL 2 FAULT WARNING LIGHT (Red overheating warning light)	NO WARNING LIGHT ON	OBD WARNING LIGHT ON
DF308	Clogged particle filter	1431	X	...	...	...
DF309	Particle filter downstream temp. sensor	544	CO.1/CC.0/1.DEF	...	...	...
DF310	Particle filter upstream temp. sensor	2031	CC.0/CO.1/1.DEF	...	...	...
DF311	Failed regenerations limit exceeded	1435	X	...	...	...
DF312	Speed request	1436	...	...	X	...
DF315	Particle filter differential pressure sensor	470	C0/CO.0/CC.1/ 1.DEF/2.DEF	...	...	...
DF619	EGR valve jammed open	2142	...	...	X	...
DF620	EGR valve fouled	2141	X	...	...	...
DF621	EGR valve is jammed open (OBD fault)	2413	...	...	X	X
DF717	Particle filter upstream pressure	1480	1.DEF	...	...	...
DF953	Particle filter absent	2002	...	...	1.DEF/2.DEF	...

GETtheMANUALS.org

DF001 PRESENT OR STORED	COOLANT TEMPERATURE SENSOR CIRCUIT CC.0 : short circuit to earth CO.1 : open circuit or short circuit on + 12 V

NOTES	**Conditions for applying the fault finding procedure to stored faults:** The fault is declared present: – when an attempt is made to start the engine, – the engine is running
	Special notes: If the fault is present: – the coolant temperature: **PR064 Coolant temperature** is fixed at **119°C**, – the preheating phase is greater than **10 seconds**, – the low-speed fan unit (**motor-driven fan unit 1**) is continuously supplied, – if **motor-driven fan unit 1** is faulty, then **motor-driven fan unit 2** is activated on vehicles fitted with climate control. – the **level 1** warning light is lit. Use bornier **Elé. 1681** for all operations on the computer connectors.

Check the connections of the **coolant temperature sensor 4-track connector**.
Repair if necessary.
Measure the **resistance** of the **coolant temperature sensor** between **tracks 2 and 3** of its black connector.
Replace the sensor if its resistance is not approximately:

75780 ± 7000 Ω at - 40°C
12460 ± 1128 Ω at -10°C
2252 ± 112 Ω at 25°C
811.4 ± 39 Ω at 50°C
283 ± 8 Ω at 80°C
115 ± 3 Ω at 110°C
87 ± 2 Ω at 120°C

Check the injection computer connections.
Check the **insulation, continuity and the absence of interference resistance** on the following connections:
Injection computer brown 48-track connector B, **track F2** → **Track 3** coolant temperature sensor
Injection computer brown 48-track connector B, **track H1** → **Track 2** coolant temperature sensor
Repair if necessary.

If the fault is still present, replace the coolant temperature sensor.

AFTER REPAIR	Deal with any faults. Carry out a road test followed by another check with the diagnostic tool.

GETtheMANUALS.org

DF003 PRESENT OR STORED	ATMOSPHERIC PRESSURE SENSOR CIRCUIT 1.DEF : signal outside upper limit 2.DEF : signal outside lower limit 3.DEF : inconsistent signal

NOTES	**Conditions for applying the fault finding procedure to stored faults:** The fault is declared present after **the engine is started or** following a road test.
	Special notes: The atmospheric pressure sensor is integrated into the injection computer and cannot be separated.
	If the fault is present: – there is light smoke, – the atmospheric pressure value changes to safe mode, **PR035 Atmospheric pressure = 750 mbar**. – the **level 1** warning light is lit. Use bornier **Elé. 1681** for all operations on the computer connectors.

Disconnect the injection computer and check the condition of the contacts and connector.
Repair if necessary.
Display the value of parameter **PR041 Turbocharger pressure**.
If this value is stuck at 750 mbar, refer to interpretation of fault **DF004 Turbocharging pressure sensor circuit** .
If the fault is still present, contact the Techline.

AFTER REPAIR	Deal with any faults. Carry out a road test followed by another check with the diagnostic tool.

GETtheMANUALS.org

DF004 PRESENT OR STORED	TURBOCHARGING PRESSURE SENSOR CIRCUIT CO.0 : open circuit or short circuit to earth CC.1 : short circuit to +12 V 1.DEF : inconsistent signal

NOTES	**Conditions for applying the fault finding procedure to stored faults:** The fault is declared present after starting the engine, or during a road test.
	Special notes: Use bornier **Elé. 1681** for any operations on the injection computer connectors. If the fault is present: – the EGR function is inhibited, – the turbocharging pressure sensor is in defect mode, **PR041 = 750 mbar**, If CO.0 or CC.1 is present the **level 1** warning light is lit.
	Order of priority in the event of more than one fault: Deal with fault **DF011 Sensor feed voltage no. 1** first if it is present or stored.
	IMPORTANT This fault can result in a rapid and significant fouling of the particle filter.

CO.0	***NOTES***	None.

Check the turbocharger pressure sensor connections.
Check the injection computer connections.
Repair if necessary.

Check **the continuity and insulation against earth** of the following connections:

- Injection computer brown 48-track connector B, **track K2** → **Track 3** turbocharger pressure sensor connector
- Injection computer brown 48-track connector B, **track G4** → **Track 1** turbocharger pressure sensor connector
- Injection computer brown 48-track connector B, **track D4** → **Track 2** turbocharger pressure sensor connector

Repair if necessary.

If the fault is still present, replace the turbocharging pressure sensor.

AFTER REPAIR	Deal with any faults. Carry out a road test followed by another check with the diagnostic tool.

GETtheMANUALS.org

DF004 **CONTINUED**	

CC.1	***NOTES***	None.

Check the turbocharger pressure sensor connections.
Check the injection computer connections.
Repair if necessary.

Check **the continuity and insulation against + 12 volts** of the following connections:

Injection computer brown 48-track connector B, **track D4** → **Track 2** turbocharger pressure sensor connector

Injection computer brown 48-track connector B, **track K2** → **Track 3** turbocharger pressure sensor connector

Repair if necessary.

If the fault is still present, replace the turbocharging pressure sensor.

1.DEF	***NOTES***	None.

If it occurs with fault DF003, perform fault finding on parameter **PR041 Turbocharging pressure**.
If the turbocharger pressure sensor is correct, contact the Techline

Check the turbocharger pressure sensor connections.
Check the injection computer connections.
Repair if necessary.

Check the **continuity and the absence of interference resistance** of the following connections:

Injection computer brown 48-track connector B, **track G4** → **Track 1** turbocharger pressure sensor connector

Injection computer brown 48-track connector B, **track D4** → **Track 2** turbocharger pressure sensor connector

Injection computer brown 48-track connector B, **track K2** → **Track 3** turbocharger pressure sensor connector

Repair if necessary.

If the fault is still present, contact the Techline.

AFTER REPAIR	Deal with any faults. Carry out a road test followed by another check with the diagnostic tool.

GETtheMANUALS.org

DF005 PRESENT OR STORED	ENGINE SPEED SENSOR CIRCUIT 1.DEF : no signal 2.DEF : inconsistent signal

NOTES	**Conditions for applying the fault finding procedure to a stored fault:** The fault is declared present: – when an attempt is made to start the engine, – when the engine is running.
	Special notes: Use bornier **Elé. 1681** for all operations on the computer connectors. The engine speed sensor is consistent with the camshaft sensor. If the fault is present, it is impossible to start or stop the engine and the **level 2** warning light is lit.

Check the engine speed sensor connections.
Repair if necessary.
Check that the sensor is correctly mounted and that the flywheel target is not damaged.
Check that the gap between the engine speed sensor and the engine flywheel is **0.5 to 1.8 mm**.
Measure the engine speed sensor **resistance** between **terminals 1 and 2** of the black connector.
If the **coil resistance** is not **250 ± 50** Ω at an engine temperature of **20°C**, replace the engine speed sensor.

Check the injection computer connections.
Repair if necessary.

Check for **continuity and the absence of interference resistance** of the following connections:
Injection computer brown 48-track connector B, **track B1** ⟶ **Track 1** engine speed sensor
Injection computer brown 48-track connector B, **track C1** ⟶ **Track 2** engine speed sensor
Repair if necessary.
If the fault is still present, contact the Techline.

AFTER REPAIR	Deal with any faults. Carry out a road test followed by another check with the diagnostic tool.

GETtheMANUALS.org

DF007 PRESENT OR STORED	RAIL PRESSURE SENSOR CIRCUIT CC.0 : short circuit to earth CO.1 : open circuit or short circuit on + 12 V 1.DEF : offset at minimum threshold 2.DEF : offset at maximum threshold

NOTES	**Priorities when dealing with a number of faults :** Deal with fault **DF013 Sensor supply voltage no. 3** first, if it is present or stored.
	Conditions for applying the fault finding procedure to stored faults: The fault is declared present after repeated engine starts or with the engine running.
	Special notes: Use bornier **Elé. 1681** for all operations on the computer connectors. If the fault is present, the engine stops immediately. If CO.1, 1.DEF is present the **level 2** fault warning light will be lit.

CC.0	***NOTES***	None.

Check the rail pressure sensor connectors. Check the injection computer connections. Repair if necessary.
Check the **continuity** and **insulation to earth** of the following connections: Injection computer brown 48-track connector B, **track G3** ⟶ **Track 2** rail pressure sensor Injection computer brown 48-track connector B, **track A4** ⟶ **Track 3** rail pressure sensor Repair if necessary.
If the fault is still present, replace the rail pressure sensor and tighten to **35 ± 5 Nm**. **Observe the safety advice in the Introduction.**

AFTER REPAIR	Deal with any faults. Carry out a road test followed by another check with the diagnostic tool.

GETtheMANUALS.org

DF007 **CONTINUED**	

CO.1	***NOTES***	None.

Check the rail pressure sensor connectors.
Check the injection computer connections.
Repair if necessary.

Check **for continuity** and **insulation to + 12 V** on the following connections:
Injection computer brown 48-track connector B, **track G3** → **Track 2** rail pressure sensor
Injection computer brown 48-track connector B, **track C4** → **Track 1** rail pressure sensor
Injection computer brown 48-track connector B, **track A4** → **Track 3** rail pressure sensor
Repair if necessary.

If the fault is still present, replace the rail pressure sensor and tighten to **35 ± 5 Nm**.
Observe the safety advice in the Introduction.

1.DEF ***2.DEF***	***NOTES***	None.

Check the rail pressure sensor connectors.
Check the injection computer connections.
Repair if necessary.

Check for **continuity** and absence of **interference resistance** of the following connections:
Injection computer brown 48-track connector B, **track G3** → **Track 2** rail pressure sensor
Injection computer brown 48-track connector B, **track A4** → **Track 3** rail pressure sensor
Injection computer brown 48-track connector B, **track C4** → **Track 1** rail pressure sensor
Repair if necessary.

With the ignition on and the engine stopped for over 1 minute:
Display parameter **PR038 Rail pressure** in the **Fuel circuit, Engine management function** tab.
– If the value is below **50 bar**, the sensor is in order.
In this case, contact the Techline.
– If the pressure is above **50 bar**, replace the rail pressure sensor and tighten to **35 ± 5 Nm**.
Observe the safety advice in the **Introduction**.

AFTER REPAIR	Deal with any faults. Carry out a road test followed by another check with the diagnostic tool.

GETtheMANUALS.org

DF008 PRESENT OR STORED	PEDAL POTENTIOMETER CIRCUIT GANG 1 CO.0 : Open circuit or short circuit to earth CC.1 : Short circuit to + 12 volts 1.DEF : Inconsistent signal 2.DEF : Accelerator pedal sensor locked

NOTES	**Conditions for applying the fault finding procedure to stored faults:** The fault is declared present after a series of full load / no load actions on the accelerator pedal.
	Special notes: Turbocharging, heating element actuation and cruise control/speed limiter not authorised. If CO.0, CC.1, 1.DEF are present, the **level 1** warning light is lit. The engine speed is set at **1,400 rpm** if there is a fault on gang 1 and 2 of the pedal potentiometer and the engine torque is limited. Use bornier **Elé. 1681 or Elé. 1590** for any work on the computer connectors. If 2.DEF is present: the brake pedal has been depressed while the accelerator is depressed and jammed.
	Priorities when dealing with a number of faults : Deal with fault **DF011 Sensor supply voltage no. 1** first if it is present or stored.

WARNING
This fault may appear if the wiring harness has been damaged.
Follow the procedure described in the Wiring Check in the Introduction.
This check enables the condition and the conformity of the engine wiring harness to be checked.

AFTER REPAIR	Deal with any faults. Carry out a road test followed by another check with the diagnostic tool.

GETtheMANUALS.org

DF008 **CONTINUED 1**	

CO.0	***NOTES***	**Priorities when dealing with a number of faults :** If fault **DF009 Pedal potentiometer circuit gang 2** is present at the same time, check that the pedal sensor connector is connected correctly.

Check the pedal potentiometer connections.
Check the injection computer connections.
Repair if necessary.

Check the **continuity** and **insulation to earth** of the following connections:

Injection computer black 32-track connector A, **track H2** ⟶ **Track 3** pedal potentiometer connector

Injection computer black 32-track connector A, **track G2** ⟶ **Track 4** pedal potentiometer connector

Injection computer black 32-track connector A, **track H3** ⟶ **Track 2** pedal potentiometer connector

Repair if necessary.

Measure the **resistance** of the pedal potentiometer on **gang 1** between **tracks 4** and **2**.
Replace the pedal potentiometer if the resistance is not approximately **1.2 ± 0.1 kΩ**.

CC.1	***NOTES***	None.

Check the pedal potentiometer connections.
Check the injection computer connections.
Repair if necessary.

Check **for continuity** and **insulation to + 12 V** on the following connections:

Injection computer black 32-track connector A, **track H2** ⟶ **Track 3** pedal potentiometer connector

Injection computer black 32-track connector A, **track G2** ⟶ **Track 4** pedal potentiometer connector

Injection computer black 32-track connector A, **track H3** ⟶ **Track 2** pedal potentiometer connector

Repair if necessary.

Measure the **resistance** of the pedal potentiometer on **gang 1** between **tracks 4** and **2**.
Replace the pedal potentiometer if its resistance is not approximately: **1.2 ± 0.1 kΩ**.

AFTER REPAIR	Deal with any faults. Carry out a road test followed by another check with the diagnostic tool.

GETtheMANUALS.org

DF008 **CONTINUED 2**	

1.DEF	***NOTES***	None.

Check the pedal potentiometer connections.
Check the injection computer connections.
Repair if necessary.

Check for **continuity** and absence of **interference resistance** of the following connections:

- Injection computer black 32-track connector A, **track H2** → **Track 3** pedal potentiometer sensor
- Injection computer black 32-track connector A, **track G2** → **Track 4** pedal potentiometer sensor
- Injection computer black 32-track connector A, **track H3** → **Track 2** pedal potentiometer sensor
- Injection computer black 32-track connector A, **track F3** → **Track 6** pedal potentiometer sensor
- Injection computer black 32-track connector A, **track F2** → **Track 5** pedal potentiometer sensor
- Injection computer black 32-track connector A, **track F4** → **Track 1** pedal potentiometer sensor

If the fault is still present, replace the pedal potentiometer.

AFTER REPAIR	Deal with any faults. Carry out a road test followed by another check with the diagnostic tool.

GETtheMANUALS.org

DF008 **CONTINUED 3**	

2.DEF	***NOTES***	None.

This is a test procedure designed to detect an accelerator pedal that is jammed in the depressed position.
It monitors the accelerator pedal in relation to the brake pedal.
If the test procedure detects depression of the brake pedal over 600 ms, it registers a fault which is stored in the computer. While this fault is present (both pedals depressed simultaneously) the engine switches to safe mode and the engine speed is set at 1,400 rpm.
Once the fault is no longer present (e.g.. brake and accelerator pedals released) safe mode is deactivated and the engine immediately regains its ability to respond to speed/torque requests.
This fault may occur even if the accelerator pedal is not jammed, if there is driver error during use:
– “Heel-and-toe” type driving.
– Vehicle with driving school option.
The procedure in this case should be to clear the fault and take another reading.

Check the mechanical condition of the accelerator pedal:
– locked in full load position,
– with the pedal blocked by an external component.

Repair if necessary.

Vary the position of the pedal and refer to the conformity check in order to check the operating values of the accelerator pedal potentiometer.

If the values displayed are inconsistent, replace the accelerator pedal potentiometer.

AFTER REPAIR	Deal with any faults. Carry out a road test followed by another check with the diagnostic tool.

GETtheMANUALS.org

DF009 PRESENT OR STORED	PEDAL POTENTIOMETER CIRCUIT GANG 2 CO.0 : open circuit or short circuit to earth CC.1: short circuit to + 12 V 1.DEF : inconsistent signal

NOTES	**Priorities when dealing with a number of faults :** Deal with fault **DF012 Sensor feed no. 2 voltage** first, if it is present or stored.
	Conditions for applying the fault finding procedure to stored faults: The fault is declared present after a series of full-load/no-load actions on the accelerator pedal.
	Special notes: Turbocharging, heating element actuation and cruise control are not authorised. The **level 1** warning light is lit. The engine speed is fixed at **1400 rpm** if there is a fault on gangs 1 and 2 of the pedal potentiometer and the engine torque is limited. Use bornier **Elé. 1681** for all operations on the computer connectors.

WARNING
This fault may appear if the wiring harness has been damaged.
Follow the procedure described in the Wiring Check in the Introduction.
This check enables the condition and the conformity of the engine wiring harness to be checked.

AFTER REPAIR	Deal with any faults. Carry out a road test followed by another check with the diagnostic tool.

GETtheMANUALS.org

DF009 **CONTINUED 1**	

CO.0	***NOTES***	**Priorities when dealing with a number of faults :** If fault **DF008 Pedal potentiometer circuit track 1** is present at the same time, check that the sensor is connected correctly.

Check the pedal potentiometer connections.
Check the injection computer connections.
Repair if necessary.

Check the **continuity** and **insulation to earth** of the following connections:
Injection computer black 32-track connector A, **track F3** → **Track 6** pedal potentiometer connector
Injection computer black 32-track connector A, **track F2** → **Track 5** pedal potentiometer connector
Injection computer black 32-track connector A, **track F4** → **Track 1** pedal potentiometer connector
Repair if necessary.

Measure the **resistance** on the pedal potentiometer on **track 2** between **tracks 1** and **5**.
Replace the pedal potentiometer if the resistance is not approximately **1.7 ± 0.9 kΩ**.

CC.1	***NOTES***	**Priorities when dealing with a number of faults :** If fault **DF012 Sensor feed voltage no. 2** is present at the same time, if it is present or stored.

Check the pedal potentiometer connections.
Check the injection computer connections.
Repair if necessary.

Check **for continuity** and **insulation to + 12 V** on the following connections:
Injection computer brown 48-track connector B, **track F3** → **Track 6** pedal potentiometer connector
Injection computer brown 48-track connector B, **track F4** → **Track 1** pedal potentiometer connector
Repair if necessary.

Measure the **resistance** on the pedal potentiometer on **track 2** between **tracks 1** and **5**.
Replace the pedal potentiometer if the resistance is not approximately **1.7 ± 0.9 kΩ**.

AFTER REPAIR	Deal with any faults. Carry out a road test followed by another check with the diagnostic tool.

GETtheMANUALS.org

DF009 **CONTINUED 2**	

1.DEF	***NOTES***	None.

Check the rail pressure sensor connectors.
Check the injection computer connections.
Repair if necessary.

Check for **continuity** and absence of **interference resistance** of the following connections:

- Injection computer black 32-track connector A, **track F3** → **Track 6** pedal potentiometer sensor
- Injection computer black 32-track connector A, **track F2** → **Track 5** pedal potentiometer sensor
- Injection computer black 32-track connector A, **track F4** → **Track 1** pedal potentiometer sensor
- Injection computer black 32-track connector A, **track H2** → **Track 3** pedal potentiometer sensor
- Injection computer black 32-track connector A, **track G2** → **Track 4** pedal potentiometer sensor
- Injection computer black 32-track connector A, **track H3** → **Track 2** pedal potentiometer sensor

Repair if necessary.
If the fault is still present, replace the pedal potentiometer.

AFTER REPAIR	Deal with any faults. Carry out a road test followed by another check with the diagnostic tool.

GETtheMANUALS.org

DF011 PRESENT OR STORED	SENSOR SUPPLY VOLTAGE NO. 1 1.DEF : Signal outside lower limit 2.DEF : Signal outside upper limit

NOTES	**Conditions for applying the fault finding procedure to stored faults:** The fault is declared present following a road test or after attempting to start the engine several times.
	Special notes: If the fault is present: – the cruise control and heating elements are deactivated, – turbocharging is inhibited, – the engine speed is limited, – the **level 1** warning light is lit. Use bornier **Elé. 1681** for any operations on the injection computer connectors.

WARNING
This fault may appear if the wiring harness has been damaged.
Follow the procedure described in Wiring check in the Introduction.
This check enables the condition and the conformity of the engine wiring harness to be checked.

1.DEF ***2.DEF***	***NOTES***	**Priorities when dealing with a number of faults :** If fault **DF008 Pedal potentiometer circuit track 1** is present at the same time, check that the sensor is connected correctly.

The sensors connected to **supply no. 1** are:
– **turbocharger pressure sensor,**
– **accelerator pedal potentiometer sensor, gang 1,**
– **particle filter differential pressure sensor.**
To locate a faulty sensor and/or connection, disconnect one of these sensors then check whether the fault becomes stored.
If the fault remains present, repeat the operation with the other sensor (wait for a few seconds between disconnecting so that the computer can take its measurement).
If the fault is stored after a disconnection, replace the faulty sensor or repair its connection.
Clear the faults created by the multiple disconnections.

AFTER REPAIR	Deal with any faults. Carry out a road test followed by another check with the diagnostic tool.

GETtheMANUALS.org

DF011 **CONTINUED**	

If the fault is still present when both these sensors have been disconnected:
1. Check the **earth insulation** of the following connections:
Injection computer brown 48-track connector B,
track G4 ⟶ **Track 1** of the turbocharger pressure sensor
Injection computer brown 48-track connector B,
track K2 ⟶ **Track 3** of the turbocharger pressure sensor
Injection computer black 32-track connector A,
track H2 ⟶ **Track 3** of the accelerator pedal potentiometer gang 1
Injection computer black 32-track connector A,
track G2 ⟶ **Track** 4 of the accelerator pedal potentiometer gang 1
Injection computer brown 48-track connector B,
track G4 ⟶ **Track 1 of the particle filter differential pressure sensor**
Injection computer grey 32-track connector C,
track B2 ⟶ **Track 3 of the particle filter differential pressure sensor**

2. Check **the insulation from + 12 V** of the following connections:
Injection computer brown 48-track connector B,
track K2 ⟶ **Track 3** of the turbocharger pressure sensor
Injection computer brown 48-track connector B,
track D4 ⟶ **Track 2** of the turbocharger pressure sensor
Injection computer black 32-track connector A,
track H3 ⟶ **Track 2** of the accelerator pedal potentiometer gang 1
Injection computer black 32-track connector A,
track H2 ⟶ **Track 3** of the accelerator pedal potentiometer gang 1
Injection computer grey 32-track connector C,
track B2 ⟶ **Track 3 of the particle filter differential pressure sensor**
Injection computer grey 32-track connector C,
track F3 ⟶ **Track 2 of the particle filter differential pressure sensor**
Repair if necessary.

3. Check the **insulation** between the following connections **after disconnecting the sensors** and the injection computer:
– tracks **2** and 4 of the **pedal sensor gang 1** connector.
– tracks **1** and 2 of the **turbocharger pressure sensor** connector.
If these checks do not produce the correct results, replace the faulty sensor(s).
If the fault is still present, contact the Techline.

AFTER REPAIR	Deal with any faults. Carry out a road test followed by another check with the diagnostic tool.

GETtheMANUALS.org

DF012 PRESENT OR STORED	SENSOR SUPPLY VOLTAGE No. 2 1.DEF : Signal outside lower limit 2.DEF : Signal outside upper limit

NOTES	**Conditions for applying the fault finding procedure to stored faults:** The fault is declared present following a road test or after attempting to start the engine several times.
	Special notes: If the fault is present: – the EGR offset programming and heating element management functions are disabled, – cruise control is deactivated, – the engine speed is limited, – the **level 1** warning light is lit, – the OBD indicator light will come on after three consecutive cycles (starting + 5 seconds + switch off the ignition and wait for the following message to appear on the **diagnostic tool: "Loss of dialogue with the computer: EDC16 C3, check the tool connection and the computer supply"**). Use bornier **Elé. 1681** for any operations on the injection computer connectors.

WARNING
This fault may appear if the wiring harness has been damaged.
Follow the procedure described in Check wiring in the Introduction.
This check enables the condition and the conformity of the engine wiring harness to be checked.

The sensors connected to **feed no. 2** are:
– **EGR valve position sensor.**
– **Accelerator pedal potentiometer sensor gang 2.**
To locate a faulty sensor and/or connection, disconnect one of these sensors then check whether the fault becomes stored.
If the fault remains present, repeat the operation with the other sensors (wait for a few seconds between disconnecting so that the computer can take its measurement).
If the fault is stored after a disconnection, replace the faulty sensor or repair its connection.
Clear the faults created by the multiple disconnections.

AFTER REPAIR	Deal with any faults. Carry out a road test followed by another check with the diagnostic tool.

GETtheMANUALS.org

DF012 **CONTINUED**	

If the fault is still present when both these sensors have been disconnected:
1. Check the **earth insulation** of the following connections:
Injection computer brown 48-track connector B,
track F4 ⟶ **Track 2** of the EGR valve connector
Injection computer brown 48-track connector B,
track J2 ⟶ **Track 6** of the EGR valve connector
Injection computer black 32-track connector A,
track F2 ⟶ **Track 5** of the accelerator pedal potentiometer gang 2
Injection computer black 32-track connector A,
track F3 ⟶ **Track** 6 of the accelerator pedal potentiometer gang 2
Repair if necessary.

2. Check **the insulation from + 12 V** of the following connections:
Injection computer brown 48-track connector B,
track J2 ⟶ **Track 6** of the EGR valve connector
Injection computer grey 32-track connector C,
track C2 ⟶ **Track 4** of the EGR valve connector
Injection computer black connector A,
track F3 ⟶ **Track 6** of the accelerator pedal potentiometer gang 2
Injection computer black connector A,
track F4 ⟶ **Track 1** of the accelerator pedal potentiometer gang 2
Repair if necessary.

3. Check the **insulation** between the following connections **after disconnecting the sensors and the injection computer**:
– tracks **1** and **5** of the **pedal sensor gang 2** connector.
– tracks **2** and **4** of the **EGR valve position sensor connector**.
If these checks do not produce the correct results, replace the faulty sensor(s). If the fault is still present, contact the Techline.

AFTER REPAIR	Deal with any faults. Carry out a road test followed by another check with the diagnostic tool.

GETtheMANUALS.org

DF013 PRESENT OR STORED	SENSOR SUPPLY VOLTAGE No. 3 1.DEF : Signal outside lower limit 2.DEF : Signal outside upper limit

NOTES	**Conditions for applying the fault finding procedure to stored faults:** The fault is declared present following a road test or after attempting to start the engine several times.
	Special notes: If the fault is present: – the EGR functions are disabled, – the engine speed is limited, – the engine stops. – the **level 2** warning light is lit. Use bornier **Elé. 1681** for any operations on the injection computer connectors.

WARNING
This fault may appear if the wiring harness has been damaged.
Follow the procedure described in Check wiring in the Introduction.
This check enables the condition and the conformity of the engine wiring harness to be checked.

The sensors connected to **supply no. 3** are:
– **rail pressure sensor,**
– **air flowmeter.**
To locate a faulty sensor and/or connection, disconnect one of these sensors then check whether the fault becomes stored.
If the fault remains present, repeat the operation with the other sensors (wait for a few seconds between disconnecting so that the computer can take its measurement).
If the fault is stored after a disconnection, replace the faulty sensor or repair its connection.
Clear the faults created by the multiple disconnections.

AFTER REPAIR	Deal with any faults. Carry out a road test followed by another check with the diagnostic tool.

GETtheMANUALS.org

DF013 **CONTINUED**	

If the fault is still present when both these sensors have been disconnected:
1. Check the **earth insulation** of the following connections:
- Injection computer brown 48-track connector B, **track G3** → **Track 2** of the rail pressure sensor
- Injection computer brown 48-track connector B, **track A4** → **Track 3** of the rail pressure sensor
- Injection computer brown 48-track connector B, **track G1** → **Track 5** of the air flowmeter
- Injection computer brown 48-track connector B, **track B4** → **Track 3** of the air flowmeter

Repair if necessary.

2. Check **the insulation from + 12 V** of the following connections:
- Injection computer brown connector B, **track G3** → **Track 2** of the rail pressure sensor
- Injection computer brown connector B, **track C4** → **Track 1** of the rail pressure sensor
- Injection computer brown connector B, **track G1** → **Track 5** of the air flowmeter
- Injection computer brown connector B, **track E2** → **Track 2** of the air flowmeter

Repair if necessary.

3. Check the **insulation** between the following connections **after disconnecting the sensors and the injection computer**:
– tracks **1** and **3** of the **rail pressure sensor**,
– tracks **2** and **3** of the **air flow sensor connector.**

If these checks do not produce the correct results, replace the faulty sensor(s).
If the fault is still present, contact the Techline.

AFTER REPAIR	Deal with any faults. Carry out a road test followed by another check with the diagnostic tool.

GETtheMANUALS.org

DF015 PRESENT OR STORED	MAIN RELAY control CIRCUIT 1.DEF : relay cut out too soon 2.DEF : relay cut out too late

NOTES	**Conditions for applying the fault finding procedure to stored faults:** Only deal with this fault if it is stored.
	Special notes: Use bornier **Elé. 1681** for any operations on the injection computer connectors. If the fault is present, the level 1 warning light will be lit.

Check the condition of the main relay supply fuse **FM3 30A**.
Replace the fuse if necessary.
Check the injection computer connections, and the injection computer supply relay **R8**.
Repair if necessary.
Remove the **R8** relay and check it is working correctly.
If this relay is defective, replace it and clear the faults.
Check the condition and tightness of the battery terminals and its engine earth connection.
Check the **continuity** and **make sure there is no interference resistance** on the following connection:
Injection computer brown **48-track connector B, track E1** ⟶ **Relay mounting R8 track 15**
Repair if necessary.

AFTER REPAIR	Deal with any faults. Carry out a road test followed by another check with the diagnostic tool.

GETtheMANUALS.org

DF017 PRESENT OR STORED	PRE-POSTHEATING UNIT CONTROL CIRCUIT CC.1 : short circuit to +12 V CC.0 : open circuit or short circuit to earth CO : open circuit 1.DEF : Internal electronic fault

NOTES	**Conditions for applying the fault finding procedure to stored faults:** The fault is declared present after attempts have been made to start the engine.
	Special notes: If the fault is present, it is difficult or even impossible to start the vehicle when cold. Use bornier **Elé. 1681** for any operations on the injection computer connectors.

CC.1	***NOTES***	None.

Check the pre-postheating unit connections and the heating plug supply cables.
Check the injection computer connections.
Repair if necessary.

Check the condition of the **F2 (70A)** supply fuse on the power supply fuse board.
Check **the continuity and insulation against + 12 V** of the following connections:
Injection computer grey 32-track connector C, **track E2** ⟶ **Track 8** preheating unit
Injection computer grey 32-track connector C, **track A4** ⟶ **Track 9** preheating unit
Repair if necessary.
If the fault is still present, replace the pre-postheating unit.

AFTER REPAIR	Deal with any faults. Carry out a road test followed by another check with the diagnostic tool.

GETtheMANUALS.org

DF017 **CONTINUED**	

CC.0 ***CO***	***NOTES***	**Special notes:** If the pre-postheating unit has a short circuit to earth there is a risk that the heater plugs will be operated continuously. The heater plugs and the engine may be damaged.

Check the pre-postheating unit connections and the heating plug supply cables. Check the injection computer connections. Repair if necessary.
Check the condition of the **F2 (70A)** supply fuse on the power supply fuse board. Check **the continuity and insulation** from earth of the following connections: Injection computer grey 32-track connector C, **track A4** ⟶ **Track 9** preheating unit Injection computer grey 32-track connector C, **track E2** ⟶ **Track 8** preheating unit Repair if necessary.
If the fault is still present, replace the pre-postheating unit.

1.DEF	***NOTES***	None.

Check the pre-postheating unit connections and the heating plug supply cables. Check the injection computer connections. Repair if necessary.
Check the condition of the **F2 (70A)** supply fuse on the power supply fuse board. Check **the continuity and insulation** from earth of the following connections: Injection computer grey 32-track connector C, **track A4** ⟶ **Track 9** preheating unit Injection computer grey 32-track connector C, **track E2** ⟶ **Track 8** preheating unit Repair if necessary.
If the fault is still present, replace the pre-postheating unit.

AFTER REPAIR	Deal with any faults. Carry out a road test followed by another check with the diagnostic tool.

GETtheMANUALS.org

DF025 PRESENT OR STORED	PRE-POSTHEATING UNIT DIAGNOSTIC LINE

NOTES	**Conditions for applying the fault finding procedure to a stored fault:** The fault is declared present after several attempts have been made to start the engine.
	Special notes: It is difficult or even impossible to start the engine when cold. Use bornier **Elé. 1681** for any operations on the injection computer connectors.

Check the pre-postheating unit connections.
Check the connections on **all the heater plugs**.
Repair if necessary.

Check **the resistance** of the heater plugs:
Replace any plug with a resistance greater than **2 Ω at +20°C**.
Check the **continuity and absence of interference resistance** of the following connections:

preheating unit **track 1** → heater plug of **cylinder 3**
preheating unit **track 2** → heater plug of cylinder **1**
preheating unit **track 6** → heater plug of cylinder **4**
preheating unit **track 7** → heater plug of **cylinder 2**

Check for + 12 V on **track 3** of the preheating unit (by fuse F2, 70A).

If the fault is still present.
Check the injection computer connections.
Check the following connections for **continuity and make sure there is no extraneous resistance**:

Injection computer grey 32-track connector C, **track A4** → **Track 9** preheating unit connector
Injection computer grey 32-track connector C, **track E2** → **Track 8** preheating unit connector

If the fault is still present, replace the pre-postheating unit.

AFTER REPAIR	Deal with any faults. Carry out a road test followed by another check with the diagnostic tool.

GETtheMANUALS.org

DF037 PRESENT OR STORED	ENGINE IMMOBILISER

NOTES	**Conditions for applying the fault finding procedure to stored faults:** The fault is declared present after an attempt to start engine.
	Special notes: It is impossible to start the vehicle. Use bornier **Elé. 1681** for any operations on the injection computer connectors.

Check the UCH connections. Check the injection computer connections. Repair if necessary.
Carry out a multiplex network test and a complete fault finding procedure on the UCH. Refer to the UCH Technical Note if a fault is declared present. If the fault is still present, contact the Techline.

AFTER REPAIR	Deal with any faults. Carry out a road test followed by another check with the diagnostic tool.

GETtheMANUALS.org

DF038 PRESENT OR STORED	COMPUTER 1.DEF : permanent high signal 2.DEF : permanent low signal 3.DEF : configuration absent or incorrect 4.DEF : analogue/digital converter fault 5.DEF : disrupted communication 6.DEF : EEPROM fault 7.DEF : activation in Watchdog 8.DEF : signal outside upper limit 9.DEF : signal outside lower limit 10.DEF : injector control 11.DEF : injector control capacitor fault 12.DEF : injection fault when decelerating 13.DEF : initialisation fault 14.DEF : open circuit or internal electronic fault

NOTES	**Conditions for applying the fault finding procedure to a stored fault:** The fault is declared present after one attempt to start the engine, or with the engine running.
	Special notes: If 6.DEF, 8.DEF, 12.DEF is present, the **level 1** warning light is on. If one of the other faults is present, the **level 2** warning light comes on. If 6.DEF is still present, the **OBD** warning light will illuminate after three consecutive driving cycles (starting + 5 seconds + switch off the ignition and wait for the message to appear on the **diagnostic tool: "Loss of dialogue with the computer: EDC16 C3, check the tool connection and the computer supply"**). Use bornier **Elé. 1681 or Elé. 1590** for all operations on the injection computer connectors.
	Priority when dealing with a number of faults: Deal with fault **DF046 Battery voltage** first if it is present or stored.

1.DEFto 10.DEF 12.DEF 13.DEF	***NOTES***	Check the injection computer connections and the **continuity** of all the supplies. Repair if necessary. Clear the faults. Switch off the ignition, and **wait** for the following message to appear on the **diagnostic tool: "Loss of dialogue with the computer: EDC16 C3, check the tool connection and the computer supply"** before switching the ignition back on. If the fault is still present, contact the Techline.

AFTER REPAIR	Deal with any faults. Carry out a road test followed by another check with the diagnostic tool.

GETtheMANUALS.org

DF038 **CONTINUED**	

11.DEF	***NOTES***	**IMPORTANT** **Only applies to LAGUNA II ph1 and VELSATIS ph1 and ph2.** If there are a number of faults, deal with the other system faults first.

Display the stored context for fault **DF038**.
PR142 Computer fault = 10

NO → Contact the Techline

YES → Check **PR071 "Computer supply voltage" > 10 V** on the main screen or the stored context of DF038

YES → Contexts stored from **DF038**
PR071 Computer supply voltage > 10 V

NO → Check the charge circuit and carry out the necessary repairs:
– Check the condition of the battery terminals,
– Carry out fault finding on the alternator.
Recharge or replace the battery.

YES → Check the condition of the wiring harness between the computer and the battery, carry out the necessary repairs.
– Start the vehicle,
– Clear the stored faults
– Check the faults
– If **DF038** is not present, end of fault finding
– If **DF038** is present, contact Techline

AFTER REPAIR	Deal with any faults. Carry out a road test followed by another check with the diagnostic tool.

GETtheMANUALS.org

DF039 PRESENT OR STORED	INLET AIR TEMPERATURE SENSOR CIRCUIT CO.1 : open circuit or short circuit on + 12 V CC.0 : short circuit to earth

NOTES	**Conditions for applying the fault finding procedure to a stored fault:** The fault is declared present after one attempt to start the engine, or with the engine running.
	Special notes: If the fault is present: – the air temperature value enters defect mode, i.e. **PR058 Air temperature = 20°C**. – the EGR function is inhibited. Use bornier **Elé. 1681** for any operations on the injection computer connectors.

CO.1	***NOTES***	None.

Check the air flowmeter connections.
Check the injection computer connections.
Repair if necessary.
Check **the continuity** of the following connection:

Flowmeter **track 4** ⟶ **Track 5 injection relay mounting (Engine connection unit)**

Repair if necessary.
Check **the continuity and insulation against + 12 V** of the following connections:

Injection computer brown 48-track connector B, **track G2** ⟶ **Track 1** air flowmeter connector
Injection computer brown 48-track connector B, **track E2** ⟶ **Track 2** air flowmeter connector

Repair if necessary.

Measure the air temperature sensor resistance between **tracks 1** and **2** of the air flow sensor.
Replace the air flowmeter if the resistance displayed is not:

3714 Ω ± 161 at 10°C
2488 Ω ± 90 at 20°C
1671 Ω ± 59 at 30°C

AFTER REPAIR	Deal with any faults. Carry out a road test followed by another check with the diagnostic tool.

GETtheMANUALS.org

DF039 **CONTINUED**	

CC.0	***NOTES***	None.

Check the air flowmeter connections.
Check the injection computer connections.
Repair if necessary.
Check the **continuity** and **insulation from earth** of the connections between:

Injection computer connector B,
brown 48-track, **track G2** ⟶ **Track 1** air flowmeter
Air flowmeter **track 4** ⟶ **Track 5 injection relay base (Engine connection unit)**
Injection computer connector B,
brown 48-track, **track B4** ⟶ **Track 3** air flowmeter

Repair if necessary.

Measure the resistance of the air temperature sensor integrated into the flow sensor between **tracks 1** and **2**.
Replace the air flowmeter if the resistance is not approximately:

3714 Ω ± 161 at 10°C
2488 Ω ± 90 at 20°C
1671 Ω ± 59 at 30°C

AFTER REPAIR	Deal with any faults. Carry out a road test followed by another check with the diagnostic tool.

GETtheMANUALS.org

DF040 PRESENT OR STORED	CYLINDER 1 INJECTOR CIRCUIT CC.1 : short circuit to +12 V CO : open circuit CC : short circuit 1.DEF : injector control

NOTES	**Conditions for applying the fault finding procedure to a stored fault:** The fault is declared present after the engine has been started.
	Special notes: If CC.1, CC, or 1.DEF is present, the **level 2** warning light is lit. If CO is present the **level 1** warning light is lit. If CO is still present, the **OBD** warning light will illuminate after three consecutive driving cycles (starting + 5 seconds + switch off the ignition and wait for the message to appear on the **diagnostic tool: "Loss of dialogue with the computer: EDC16 C3, check the tool connection and the computer supply"**). If the fault is present, the injection on cylinder 1 is disabled. Use bornier **Elé. 1681 or Elé. 1590** for all operations on the injection computer connectors.
	IMPORTANT This fault can result in a rapid and significant fouling of the particle filter.

WARNING
This fault may appear if the wiring harness has been damaged.
Follow the procedure described in the Wiring Check in the Introduction.
This test enables the condition and the conformity of the engine wiring harness to be checked.

CC.1 ***CO*** ***CC*** ***1.DEF***	***NOTES***	None.

Check the connections on injector no 1. Check the injection computer connections.
Repair if necessary.

Disconnect injector No. 1.
Measure the **resistance** of injector no. 1 between **tracks 1** and **2**.
Replace the injector if there is a short **circuit (R = 0 Ω)** or an **open circuit (resistance = infinity)**. Otherwise **reconnect injector No. 1**.
Check the **continuity and absence of interference resistance** of the following connections:
Injection computer grey 32-track connector C, **track G3** ⟶ **Track 2** injector no. 1
Injection computer grey 32-track connector C, **track H1** ⟶ **Track 1** injector no. 1
If the fault is still present, carry out **test 10 INCORRECT INJECTOR OPERATION**.
If the fault is still present, contact the Techline.

AFTER REPAIR	Deal with any faults. Carry out a road test followed by another check with the diagnostic tool.

GETtheMANUALS.org

DF041 PRESENT OR STORED	CYLINDER 2 INJECTOR CIRCUIT CC.1 : short circuit to +12 V CO : open circuit CC : short circuit 1.DEF : injector control

NOTES	**Conditions for applying the fault finding procedure to a stored fault:** The fault is declared present after the engine has been started.
	Special notes: If CC.1, CC, or 1.DEF is present, the **level 2** warning light is lit. If CO is present the **level 1** warning light is lit. If CO is still present, the **OBD** warning light will illuminate after three consecutive driving cycles (starting + 5 seconds + switch off the ignition and wait for the message to appear on the **diagnostic tool: "Loss of dialogue with the computer: EDC16 C3, check the tool connection and the computer supply"**). If the fault is present, the injection on cylinder 2 is disabled. Use bornier **Elé. 1681 or Elé. 1590** for all operations on the injection computer connectors.
	IMPORTANT This fault can result in a rapid and significant fouling of the particle filter.

WARNING
This fault may appear if the wiring harness has been damaged.
Follow the procedure described in the Wiring Check in the Introduction.
This test enables the condition and the conformity of the engine wiring harness to be checked.

CC.1 ***CO*** ***CC*** ***1.DEF***	***NOTES***	None.

Check the connections on injector no. 2. Check the injection computer connections.
Repair if necessary.

Disconnect injector no. 2.
Measure the **resistance** of injector no. 2 between **tracks 1** and **2**.
Replace the injector if there is a **short circuit (R = 0 Ω)** or an **open circuit (resistance = infinity)**. Otherwise **reconnect injector no. 2**.
Check the **continuity and absence of interference resistance** on the following connections:
Injection computer grey 32-track connector C, **track G4** ⟶ **Track 2** injector no. 2
Injection computer grey 32-track connector C, **track G2** ⟶ **Track 1** injector no. 2
If the fault is still present, carry out **test 10 INCORRECT INJECTOR OPERATION**.
If the fault is still present, contact the Techline.

AFTER REPAIR	Deal with any faults. Carry out a road test followed by another check with the **diagnostic tool**.

GETtheMANUALS.org

DF042 PRESENT OR STORED	CYLINDER 3 INJECTOR CIRCUIT CC.1 : short circuit to +12 V CO : open circuit CC : short circuit 1.DEF : injector control

NOTES	**Conditions for applying the fault finding procedure to a stored fault:** The fault is declared present after the engine has been started.
	Special notes: If CC.1, CC, or 1.DEF is present, the **level 2** warning light is lit. If CO is present the **level 1** warning light is lit. If CO is still present, the **OBD** warning light will illuminate after three consecutive driving cycles (starting + 5 seconds + switch off the ignition and wait for the message to appear on the **diagnostic tool: "Loss of dialogue with the computer: EDC16 C3, check the tool connection and the computer supply"**). If the fault is present, the injection on cylinder 3 is disabled. Use bornier **Elé. 1681 or Elé. 1590** for all operations on the injection computer connectors.
	IMPORTANT This fault can result in a rapid and significant fouling of the particle filter.

WARNING
This fault may appear if the wiring harness has been damaged.
Follow the procedure described in the Wiring Check in the Introduction.
This test enables the condition and the conformity of the engine wiring harness to be checked.

CC.1 ***CO*** ***CC*** ***1.DEF***	***NOTES***	None.

Check the connections on injector no. 3. Check the injection computer connections.
Repair if necessary.

Disconnect injector no.3.
Measure the **resistance** of injector no. 3 between **tracks 1** and **2**.
Replace the injector if there is a **short circuit (R = 0 Ω)** or an **open circuit (resistance = infinity)**. Otherwise **reconnect injector no. 3**.
Check **the continuity and absence of interference resistance** of the following connections:
Injection computer grey 32-track connector C, **track H4** ⟶ **Track 2** injector no. 3
Injection computer grey 32-track connector C, **track H2** ⟶ **Track 1** injector no. 3
If the fault is still present, carry out **test 10 INCORRECT INJECTOR OPERATION**.
If the fault is still present, contact the Techline.

AFTER REPAIR	Deal with any faults. Carry out a road test followed by another check with the **diagnostic tool**.

GETtheMANUALS.org

DF043 PRESENT OR STORED	CYLINDER 4 INJECTOR CIRCUIT CC.1 : short circuit to +12 V CO : open circuit CC : short circuit 1.DEF : injector control

NOTES	**Conditions for applying the fault finding procedure to a stored fault:** The fault is declared present after the engine has been started.
	Special notes: If CC.1, CC, or 1.DEF is present, the **level 2** warning light is lit. If CO is present the **level 1** warning light is lit. If CO is still present, the **OBD** warning light will illuminate after three consecutive driving cycles (starting + 5 seconds + switch off the ignition and wait for the message to appear on the **diagnostic tool: "Loss of dialogue with the computer: EDC16 C3, check the tool connection and the computer supply"**). If the fault is present, the injection on cylinder 4 is disabled. Use bornier **Elé. 1681 or Elé. 1590** for all operations on the injection computer connectors.
	IMPORTANT This fault can result in a rapid and significant fouling of the particle filter.

WARNING
This fault may appear if the wiring harness has been damaged.
Follow the procedure described in the Wiring Check in the Introduction.
This test enables the condition and the conformity of the engine wiring harness to be checked.

CC.1 ***CO*** ***CC*** ***1.DEF***	***NOTES***	None.

Check the connections to injector no. 4. Check the injection computer connections.
Repair if necessary.

Disconnect injector no. 4.
Measure the **resistance** of injector no. 4 between **tracks 1** and **2**.
Replace the injector if there is a short **circuit (R = 0 Ω)** or an **open circuit (resistance = infinity)**. Otherwise **reconnect injector no. 4**.
Check the **continuity and absence of interference resistance** on the following connections:
Injection computer grey 32-track connector C, **track H3** ⟶ **Track 2** injector no. 4
Injection computer grey 32-track connector C, **track G1** ⟶ **Track 1** injector no. 4
If the fault is still present, carry out **test 10 INCORRECT INJECTOR OPERATION**.
If the fault is still present, contact the Techline.

AFTER REPAIR	Deal with any faults. Carry out a road test followed by another check with the **diagnostic tool**.

GETtheMANUALS.org

DF046 PRESENT OR STORED	BATTERY VOLTAGE 1.DEF : excess voltage 2.DEF : undervoltage 3.DEF : voltage outside tolerance range

NOTES	**Conditions for applying the fault finding procedure to a stored fault:** The fault is declared present following a road test or after attempting to start the engine.
	Special notes: Computer operating voltage: **9 V < operating voltage < 16 V**. If the battery voltage is too low this may cause the **level 1** fault warning light to come on. It is then not possible to start the engine. Use bornier **Elé. 1681** for any operations on the injection computer connectors.

1.DEF	***NOTES***	None.

Check the charge circuits:
– Battery condition
– Alternator condition (complete fault finding procedure)
Carry out the necessary repairs.

AFTER REPAIR	Deal with any faults. Carry out a road test followed by another check with the diagnostic tool.

GETtheMANUALS.org

DF046 **CONTINUED**	

2.DEF	***NOTES***	Use the Wiring diagrams Technical Note.
3.DEF		Use the Wiring diagrams Technical Note. Only VEL SATIS phase 2 Vdiag 14

With the ignition off, measure the voltage across the battery terminals.
If the voltage is below **11.5 V**, recharge and test the battery.
If necessary replace the battery, then check the charge circuit.
With the ignition on, and the starter operating, measure the battery voltage across the terminals.
If the voltage drops below **9.6 V**, check the tightness and condition of the battery terminals.
Recharge and test the battery.
If necessary replace the battery, then check the charge circuit.

If the starter is driving the engine correctly, but the fault is still present:
– Check **for + 12 V after ignition** on:
Track **G1** of the injection computer black connector **A**
Track **E1** of brown connector **B** from the injection computer
If there is no feed to these tracks, check the condition of fuse **FM3 (30A)** on the fuse board.
Replace if necessary.
– Check the condition of the injection computer supply voltage **relay R8**.
Repair the contacts or replace them if necessary.
– Check the **continuity and absence of interference resistance** of the following connections:
Track 15 of relay **R8** ⟶ **Track E1** of brown connector **B** of the injection computer
Track 13 of relay **R8** ⟶ **Track G1** of black connector **A** of the injection computer
Repair if necessary.

AFTER REPAIR	Deal with any faults. Carry out a road test followed by another check with the diagnostic tool.

GETtheMANUALS.org

DF047 PRESENT OR STORED	COMPUTER SUPPLY VOLTAGE 1.DEF : voltage outside tolerances

NOTES	**Conditions for applying the fault finding procedure to stored faults:** The fault is declared present after several starting attempts, or with the engine running.
	Special notes: Computer operating voltage: **9 V < operating voltage < 16 V**. If the battery voltage is too low this may cause the **level 1** fault warning light to come on. It is then not possible to start the engine. Use bornier **Elé. 1681** for any operations on the injection computer connectors.

Check the condition of the fuses **FM3 30A** and **FM6 10A**.
Replace if necessary.
Remove the computer supply relay **R8** and check that it is working properly. If it is faulty, replace it.
Check the **+ 12 V after ignition feed** to the following tracks:
– **Track G1** of the injection computer black connector A
– **Track D1** of the injection computer black connector A
If there is no feed on **track G1** of the injection computer black connector A, check **the continuity and make sure there is no interference resistance** between:

Track G1 ⟶ Relay mounting **R8 track 13**

Repair if necessary.
If there is no feed on **track D1** of the injection computer black connector A, check **the continuity and make sure there is no interference resistance** between:

Track D1 ⟶ Engine fuse and relay box **track 28**

Repair if necessary.

If all these checks have been carried out and there are no faulty components, check **the continuity and that there is no interference resistance** between:

Injection computer **brown connector B track E1** ⟶ Relay mounting **R8 track 15**

Repair if necessary.
If the fault is still present, contact the Techline.

AFTER REPAIR	Deal with any faults. Carry out a road test followed by another check with the diagnostic tool.

GETtheMANUALS.org

DF050 PRESENT OR STORED	BRAKE SWITCH CIRCUIT 1.DEF : Open circuit or short circuit 2.DEF : Inconsistent signal

NOTES	**Conditions for applying the fault finding procedure to a stored fault:** The fault is declared present after the brake pedal is depressed, or during a road test.
	Special notes: If the fault is present, cruise control is deactivated. Use bornier **Elé. 1681** for any operations on the injection computer connectors.

WARNING
This fault may appear if the wiring harness has been damaged.
Follow the procedure described in the Wiring Check in the Introduction.
This check enables the condition and the conformity of the engine wiring harness to be checked.

1.DEF	***NOTES***	***IMPORTANT** Two types of switch are used. Only the track assignments are different: The first type uses tracks A1, B3, A3 and B1, The second uses tracks 1, 2, 3 and 4.

Check the brake pedal switch connections.
Check the condition and adjustment of the brake pedal switch.
Repair if necessary.

Check the continuity and the absence of interference resistance on the following connection:
Injection computer **black 32-track connector A, track E4** ⟶ **Track 3 or A3*** of the brake switch
Repair if necessary.
Check the conformity of the switch by consulting the interpretation of statuses **ET704 Brake switch no. 1** and **ET705 Brake switch no. 2**.
If the fault is still present, carry out fault finding on the ABS computer.

AFTER REPAIR	Deal with any faults. Carry out a road test followed by another check with the diagnostic tool.

GETtheMANUALS.org

DF050 **CONTINUED**	

2.DEF	***NOTES***	***IMPORTANT** Two types of switch are used. Only the track assignments are different: The first type uses tracks A1, B3, A3 and B1, The second uses tracks 1, 2, 3 and 4.

Check the brake pedal switch connections.
Check the condition and adjustment of the brake pedal switch.
Repair if necessary.

Check **the conformity of the** brake light switch:

Brake pedal released:	continuity between **tracks 3** and **4** or **A3** and **B1***
Brake pedal depressed:	infinite resistance between **tracks 1** and **2** or **A1** and **B3***
	infinite resistance between **tracks 3** and **4** or **A3** and **B1***
	continuity between **tracks 1** and **2** or **A1** and **B3***

Replace the switch if necessary.
Check the condition of fuse **1H (15A)** of the passenger compartment fuse and relay board.
Replace the fuse if necessary.
Check **the feeds** to the switch:

+12 V after ignition ⟶ **track 2 or B3*** of the brake pedal switch connector
+12 V battery ⟶ **track 4 or B1*** of the brake pedal switch connector (via the UCH)

Replace the switch if necessary.
Check **the continuity and insulation** of the following connections:

Injection computer black 32-track connector **A**, **track E4** ⟶ **Track 3 or A3*** of the brake pedal switch connector

Repair if necessary.

AFTER REPAIR	Deal with any faults. Carry out a road test followed by another check with the diagnostic tool.

GETtheMANUALS.org

DF051 PRESENT OR STORED	CRUISE CONTROL/SPEED LIMITER FUNCTION 1.DEF : inconsistent signal 2.DEF : inconsistent vehicle speed 3.DEF : controls at the steering wheel

NOTES	**Conditions for applying the fault finding procedure to a stored fault:** The fault is declared present after the engine is started or following a road test.
	Special notes: The cruise control/speed limiter function is inhibited. Use bornier **Elé. 1681** for any operations on the injection computer connectors.

WARNING
This fault may appear if the wiring harness has been damaged.
Follow the procedure described in the Wiring Check in the Introduction.
This check enables the condition and the conformity of the engine wiring harness to be checked.

If the fault is declared present, refer to the section of the conformity check on the **Cruise control/Speed limiter**, and to the interpretation of statuses:
ET042 Cruise control/Speed limiter,
ET413 Cruise control/Speed limiter function,
ET556 Driver's deactivation of the cruise control/speed limiter,
ET557 Cruise control/speed limiter deactivation by function.

Check that by pressing the buttons the statuses change and that, with the ignition switched on, all the values are correct.

If the fault is still present, contact the Techline.

AFTER REPAIR	Deal with any faults. Carry out a road test followed by another check with the diagnostic tool.

GETtheMANUALS.org

DF053 PRESENT OR STORED	RAIL PRESSURE REGULATION FUNCTION CC.1 : short circuit to + 12 V CC.0 : short circuit to earth CO : open circuit 1.DEF : internal electronic fault 2.DEF : pressure measured too low 3.DEF : pressure measured too high 4.DEF : insufficient pressure 5.DEF : pressure < minimum 6.DEF : pressure > maximum 7.DEF : significant pump control

NOTES	**Conditions for applying the fault finding procedure to a stored fault:** The fault is declared present following a road test or after attempting to start the engine.
	Special notes: If the fault is present: – It is not possible to start the engine. – the level 2 warning light is lit. Use bornier **Elé. 1681** for any operations on the injection computer connectors.

CC.1	***NOTES***	None.

Check the rail pressure regulator connectors.
Check the injection computer connections.
Check the low pressure circuit and the fuel conformity by running **test 2 Low pressure circuit check and test 7 Diesel fuel conformity check**.
Check the injector return flow, run **test 10 Poor injector operation.**
Check the operation of the overpressure valve if fitted to the vehicle, run test **8 Incorrect operation of the overpressure valve**.
Repair if necessary.

Measure the **resistance** of the fuel temperature sensor between its **tracks 1** and **2**.
If the resistance is not: **3 Ω ± 0.4 at 20°C**, replace the fuel flow actuator.
Check **the continuity and the insulation against +12 V** of the following connection:
Injection computer brown 48-track connector **B**, **track M4** ⟶ **Track 2** of the fuel flow actuator

If the fault is still present replace the rail pressure regulator.

AFTER REPAIR	Deal with any faults. Carry out a road test followed by another check with the diagnostic tool.

GETtheMANUALS.org

DF053 **CONTINUED 1**	

CC.0 ***CO***	***NOTES***	None.

Check the fuel flow regulator connections. Check the injection computer connections. Check the low pressure circuit and the fuel conformity by running **test 2 Low pressure circuit check and test 7 Diesel fuel conformity check**. Check the injector return flow, run **test 10 Poor injector operation.** Check the operation of the overpressure valve if fitted to the vehicle, run test **8 Incorrect operation of the overpressure valve**. Repair if necessary.
Measure the **resistance** across **tracks 1** and **2** of the flow regulator. If the resistance is not: **3 Ω ± 0.4 at 20°C**, replace the fuel flow regulator. Check **the continuity and insulation** to earth of the following connection: Injection computer brown 48-track connector **B**, **track M4** ⟶ **Track 2** of the fuel flow regulator With the ignition on, check for the **+ 12 V** after relay feed on **track 1** of the fuel flow regulator.
If the fault is still present, replace the fuel flow regulator.

AFTER REPAIR	Deal with any faults. Carry out a road test followed by another check with the diagnostic tool.

GETtheMANUALS.org

DF053 **CONTINUED 2**	

1.DEF	***NOTES***	None.

Check the rail pressure regulator connectors.
Check the injection computer connections.
Check the low pressure circuit and the fuel conformity by running **test 2 Low pressure circuit check and test 7 Diesel fuel conformity check**.
Check the injector return flow, run **test 10 Poor injector operation.**
Check the operation of the overpressure valve if fitted to the vehicle, run test **8 Incorrect operation of the overpressure valve**.
Repair if necessary.

Measure the **resistance** across **tracks 1** and **2** of the flow regulator.
If the resistance is not: **3 Ω ± 0.4 at 20°C**, replace the fuel flow regulator.
Check continuity and make sure there is no interference resistance on the following connection:
Injection computer brown 48-track connector **B**, **track M4** ⟶ **Track 2** of the fuel flow regulator
With the ignition on, check for the **+ 12 V** after relay feed on **track 1** of the fuel flow regulator.

If the fault is still present, **check that the computer output is working correctly**.

● **Either using an ammeter:**
With the solenoid valve connected, connect the current clamp to the **track 1** connection of the solenoid valve (in the direction of the current).
Clear any fuel pressure solenoid valve fault, then run command **AC035 Fuel pressure solenoid valve** :
➡ The ammeter should display ten cycles of two successive currents: **~ 0.6 A** then **~ 2 A**

● **Using a voltmeter:**
With the solenoid valve connected, connect the voltmeter earth lead to **track 2** of the fuel pressure solenoid valve and the positive cable to **track 1**. Clear any fuel pressure solenoid valve fault, then run command **AC035 Fuel pressure solenoid valve** :
➡ The voltmeter should display two voltages in succession ~ = battery voltage X OCR* in progress,
That is, successively: **~ 3.15 V** for an OCR* of **25%** then **~ 9.45 V** for an OCR* of **75%** (ten cycles)

● **Or using an oscilloscope** (range **5 V**/div and time base **1 ms/div**):
With the solenoid valve connected, connect the oscilloscope earth to the battery earth and the positive test pin to **track 2** of the fuel pressure solenoid valve; clear any fuel pressure solenoid valve faults then run command **AC035 Fuel pressure solenoid valve**:
➡ the oscilloscope should display a square pulse signal with an amplitude of **12.5 V** at a frequency of **185 Hz** (with an OCR* alternating successively from **25 to 75%**).

*Opening cyclic ratio

AFTER REPAIR	Deal with any faults. Carry out a road test followed by another check with the diagnostic tool.

GETtheMANUALS.org

DF053 **CONTINUED 3**	

2.DEF at 7.DEF	***NOTES***	None.

Check the operation of the overpressure valve if fitted to the vehicle, run test **8 Incorrect operation of the overpressure valve**.

In the event of rail overpressure:
Check the operation of the injectors: see **13B, Component testing, Test 10 Poor injector operation**.
Check that the rail pressure sensor is operating correctly using command **AC035 Fuel pressure solenoid valve**.
Display parameter **PR038 Rail pressure**, and refer to the conformity check to check the operating values.
If these checks do not reveal any faults, and if the fault is still present, replace the rail pressure regulator.

in the event of rail underpressure:
Check that the rail pressure sensor is operating correctly using command **AC035 Fuel pressure solenoid valve**.
Display parameter **PR038 Rail pressure** and refer to the conformity check to check the conformity of the operating values.
Check the low pressure diesel circuit priming.
Check the conformity of the diesel filter connections.
Check the condition of the filter (clogging and water saturation).
Check that there are no air bubbles between the filter and the high pressure pump.
Check the low and high pressure diesel fuel circuit sealing (visual inspections, odour, etc.): pump housing, pressure relief valve, pipes, rail and injector unions, injector wells, etc.
Check the conformity of the seal fitting on the pressure regulator.
Check the operation of the injectors: see **13B, Component testing, Test 10 Poor injector operation**.
Carry out the necessary operations.
If the fault is still present replace the rail pressure regulator.

AFTER REPAIR	Deal with any faults. Carry out a road test followed by another check with the **diagnostic tool**.

GETtheMANUALS.org

DF054 PRESENT OR STORED	TURBOCHARGING SOLENOID VALVE CONTROL CIRCUIT CC.1 : short circuit to + 12 V CC.0 : short circuit to earth CO : open circuit 1.DEF : internal electronic fault 2.DEF : signal incoherence 3.DEF : signal outside lower limit 4.DEF : signal outside upper limit 5.DEF : permanent high signal

NOTES	**Conditions for applying the fault finding procedure to stored faults:** The fault is declared present after: – the engine is started, – a road test, – actuator command **AC004 Turbocharging solenoid valve**.
	Special notes: If the fault is present: – turbocharging is no longer authorised, – the EGR function is inhibited, – the level 1 warning light is lit, – the vehicle lacks performance. – the **OBD** indicator light will illuminate after three consecutive driving cycles (starting + 5 seconds + switch off the ignition and wait for the message to appear on the **diagnostic tool: "Loss of dialogue with the computer: EDC16 C3, check the tool connection and the computer supply"**). Use bornier **Elé. 1681** for any operations on the injection computer connectors.

CC.1	***NOTES***	None.

Check the turbocharging solenoid valve connections. Check the injection computer connections. Repair if necessary.
Measure the resistance of the turbocharging solenoid valve between **tracks 1** and **2**: If the resistance displayed is not **15.4 Ω ± 0.7 at 20°C**, replace the turbocharging solenoid valve
Check the **continuity and insulation from the + 12 V feed** of the following connection: Injection computer grey 32-track connector **C**, **track E1** ⟶ **Track 1** turbocharging solenoid valve Repair if necessary.
If the fault is still present, replace the turbocharging solenoid valve.

AFTER REPAIR	Deal with any faults. Carry out a road test followed by another check with the diagnostic tool.

GETtheMANUALS.org

DF054 **CONTINUED 1**	

CC.0 ***CO***	***NOTES***	None.

Check the turbocharging solenoid valve connections. Check the injection computer connections. Repair if necessary.
Measure the resistance of the turbocharging solenoid valve between **tracks 1** and **2**: If the resistance displayed is not **15.4 Ω ± 0.7 at 20°C**, replace the turbocharging solenoid valve.
Check the **continuity and insulation against earth** of the following connections: Injection computer grey 32-track connector **C**, **track E1** ⟶ **Track 1** turbocharging solenoid valve Check for + 12 V after relay feed on track 2 of the turbocharging solenoid valve connector. Repair if necessary.
If the fault is still present, replace the turbocharging solenoid valve.

AFTER REPAIR	Deal with any faults. Carry out a road test followed by another check with the diagnostic tool.

GETtheMANUALS.org

DF054 **CONTINUED 2**	

1.DEF to 5.DEF	***NOTES***	None.

Check the turbocharging solenoid valve connections.

Check the injection computer connections.

Repair if necessary.

Measure the resistance of the turbocharging solenoid valve between **tracks 1** and **2**:
If the resistance displayed is not **15.4 Ω ± 0.7 at 20°C**, replace the turbocharging solenoid valve.

Check **the continuity and insulation against earth** of the following connection:
Injection computer brown 48-track connector **B**, **track G4** ⟶ **Track 1** turbocharging solenoid valve

Check for + 12 V after relay feed on track 2 of the turbocharging solenoid valve connector.
If the fault is still present, **check that the computer output is working correctly**.
With the turbocharging solenoid valve connected:
Using a voltmeter:
– Connect the positive terminal of the voltmeter to **track 2** of the solenoid valve and the negative terminal to **track 1**,
– Clear any solenoid valve faults and run command **AC004 Turbocharger solenoid valve**.
– The voltmeter should display **ten cycles** of two successive voltages: **~ 2.5 V** (OCR of **20%**) then **~ 8.75 V** (OCR* of **70%**).
Using an oscilloscope (at 5 V/division range and 1 ms/division time base):
Connect the negative terminal of the oscilloscope to the battery earth and the positive **track 2** of the solenoid valve.
Clear any solenoid valve faults and run command **AC004 Turbocharging solenoid valve**.
– The oscilloscope should display a square wave signal with an amplitude of **12.5V** (equal to the battery voltage) at a frequency of **140 Hz** (with an OCR changing successively from **~ 20 to ~ 70%**).
– if the measurement is correct, replace the solenoid valve.
– if the measurement does not show any control or continuous voltage, contact the techline.

***Opening cyclic ratio**

AFTER REPAIR	Deal with any faults. Carry out a road test followed by another check with the diagnostic tool.

GETtheMANUALS.org

DF055 PRESENT OR STORED	TURBOCHARGING PRESSURE REGULATION CIRCUIT 1.DEF : pressure too low 2.DEF : pressure too high

NOTES	**Conditions for applying the fault finding procedure to stored faults:** The fault is declared present after: – the engine is started, – a road test.
	Special notes: If the fault is present: – turbocharging is no longer authorised, – the EGR function is inhibited, – the **level 1** warning light is illuminated. Use bornier **Elé. 1681** for any operations on the injection computer connectors.
	IMPORTANT The fault can result in a rapid and significant fouling of the particle filter.

1.DEF	***NOTES***	None.

Check the turbocharger pressure sensor connections.
Check the connections of the turbocharging pressure relief solenoid valve.
Check the injection computer connections.
Repair if necessary.

Check the sealing of the high pressure air circuit:
– disconnected or pierced pipes,
– pressure sensor disconnected or poorly fitted (seal present),
– intercooler pierced (to check the intercooler: with the vehicle stationary, stabilise the engine speed between 3,500 and 4,000 rpm and check that there are no leaks).

Check the conformity of the turbocharging pressure signal and apply test 5 and test 6.

AFTER REPAIR	Deal with any faults. Carry out a road test followed by another check with the diagnostic tool.

GETtheMANUALS.org

DF055 **CONTINUED 1**	

Check that the turbocharger and the control circuit are working:
– With the engine stopped, make sure that the control rod is in the resting position.
– Start the engine and make sure that the control rod operates to the upper stop.
(when the engine stops, the control rod should return to the rest position).
If the control rod does not move correctly, carry out the following checks:
1) Vacuum pressure command check:
– disconnect the solenoid valve inlet **hose** and connect it to a pressure gauge,
– start the engine and stabilise it at idle speed,
– If the vacuum does not reach **800 mbar ± 100**: check the vacuum pressure circuit from the vacuum pump,
– stop the engine, reconnect the inlet hose and proceed to step 2.
2) Solenoid valve control check:
– Disconnect the solenoid valve outlet **hose**,
– start the engine and stabilise it at idle speed,
– place your hand on the solenoid valve and block the outlet **connection** with your thumb,
– if there is no detectable vibration of the solenoid valve, check that the computer output is operating correctly (see **DF054 Turbocharging solenoid valve control circuit 1.DEF**).
3) Solenoid valve operation check:
– Attach the pressure gauge to the solenoid valve outlet **union**,
– start the engine and stabilise it at idle speed,
– if the vacuum pressure does not reach **800 mbar ± 100**, replace the solenoid valve.

AFTER REPAIR	Deal with any faults. Carry out a road test followed by another check with the diagnostic tool.

GETtheMANUALS.org

DF055 **CONTINUED 2**	

2.DEF	***NOTES***	**Priority when dealing with a number of faults:** Deal with fault **DF004 Turbocharger pressure sensor circuit** first if it is present or stored.

Check the turbocharger pressure sensor connections.
Check the connections of the turbocharging pressure relief solenoid valve.
Check the injection computer connections.
Repair if necessary.

Check the conformity of the turbocharging pressure signal (refer to the interpretation of parameter **PR041 Turbocharging pressure**).

Make sure the turbocharging pressure relief solenoid valve is not jammed open:
– With the engine switched off, disconnect the **inlet and outlet hoses** from the solenoid valve.
– connect a vacuum pump to the inlet **union** and apply a vacuum pressure.
– if the vacuum pressure **is not maintained**: replace the solenoid valve.

Check that the turbocharger control rod has not seized:
– with the engine stopped, make sure the turbocharger control rod is in the rest position.
– apply a vacuum pressure of **800 mbar ± 100**, to the hose connected to the turbocharger control diaphragm,
– If the diaphragm holds the vacuum pressure, check the movement and setting of the turbocharger control rod,
– Laguna ph1 (see **MR 339, 12, Turbocharging, Pressure adjustment**),
– Laguna ph2 (see **MR 395, 12B, Turbocharging, Turbocharging pressure regulation valve**),
– Velsatis (see **MR 353, 12B, Turbocharging, Turbocharging pressure regulation valve**).
If the control rod is seized, replace the turbocharger.
If the fault is still present, apply test 5 and test 6.

AFTER REPAIR	Deal with any faults. Carry out a road test followed by another check with the diagnostic tool.

GETtheMANUALS.org

DF056 PRESENT OR STORED	AIR FLOWMETER CIRCUIT CC.1 : short circuit to + 12 V CO.0 : open circuit or short circuit to earth 1.DEF : offset at minimum threshold 2.DEF : offset at maximum threshold 3.DEF : parameter at maximum limit 4.DEF : parameter at minimum limit

NOTES	**Conditions for applying the fault finding procedure to stored faults:** The fault is declared present after a road test.
	Special notes: Use bornier **Elé. 1681** for any operations on the injection computer connectors.

CC.1	***NOTES***	None.

Check the air flowmeter connections.
Check the injection computer connections.
Repair if necessary.

Check the continuity and the insulation to **+ 12 V** of the following connections:

Injection computer brown 48-track connector B, **track G2** → **Track 1** air flow sensor
Injection computer brown 48-track connector B, **track E2** → **Track 2** air flow sensor
Injection computer brown 48-track connector B, **track G1** → **Track 5** air flow sensor
Engine **earth** → **Track 6** air flow sensor

If the fault is still present, replace the air flowmeter.

AFTER REPAIR	Deal with any faults. Carry out a road test followed by another check with the diagnostic tool.

GETtheMANUALS.org

DF056 **CONTINUED 1**	

CO.0	***NOTES***	None.

Check that there is a + 5 V supply on track 3 of the air flowmeter.
Repair if necessary.
Check the air flowmeter connections.
Check the injection computer connections.
Repair if necessary.

Check the continuity and insulation **from earth** of the following connections:

Injection computer brown 48-track connector B, **track E2** → **Track 2** air flow sensor
Injection computer brown 48-track connector B, **track B4** → **Track 3** air flow sensor
Injection computer brown 48-track connector B, **track G1** → **Track 5** air flow sensor

Check for the presence of **+ 12 V after relay** on **track 4** of the air flow sensor connector.
Run **TEST 4 Air flowmeter**.
Repair if necessary.
If the fault is still present and remains present, replace the air flowmeter.

AFTER REPAIR	Deal with any faults. Carry out a road test followed by another check with the diagnostic tool.

GETtheMANUALS.org

DF056 **CONTINUED 2**	

1.DEF at 4.DEF	***NOTES***	**Conditions for applying the fault finding procedure to a stored fault:** The fault is declared present after the ignition has been switched off for **1 minute**.

Check the air flowmeter connections.
Check the injection computer connections.
Repair if necessary.

Check the continuity and the absence of interference resistance on the following connections:

Injection computer brown 48-track connector B, **track B4** → **Track 3** air flow sensor
Injection computer brown 48-track connector B, **track G1** → **Track 5** air flow sensor
Earth → **Track 6** air flow sensor
Injection computer brown 48-track connector B, **track E2** → **Track 2** air flow sensor

Check for **+12 V after relay** on **track 4** of the air flow sensor connector.
Repair if necessary.
If the fault is still present, apply **test 3: Checking the turbocharged air inlet circuit** and **test 4: Air flow sensor**,
– check that the damper valve is open (valve control **pushing on the body** of the air vent unit)
– with the flow sensor **connected**, the vehicle **ignition on** and **engine stopped**:
– Check the voltage between **tracks 2** and **5** of the flowmeter:
If the value is not **0.6 V ± 0.1**, replace the air flow sensor.

● **Check the EGR valve is not jammed open:**
– Deal with any faults.
– Use the conformity check and the **EMISSION CONTROL/OBD** sub-function.

If these checks show that the valve is jammed or irrevocably seized, replace the EGR valve.
If no faults are revealed, but the fault is still present, replace the air flowmeter.

AFTER REPAIR	Deal with any faults. Carry out a road test followed by another check with the diagnostic tool.

GETtheMANUALS.org

DF057 PRESENT OR STORED	WATER IN DIESEL FUEL DETECTOR CIRCUIT

NOTES	**Conditions for applying the fault finding procedure to stored faults:** The fault is declared present after the engine is started or following a road test.

Check the conformity and quality of the fuel by running **test 7 Diesel fuel conformity check**.
Check the sealing of the low pressure circuit and tank.

A) Make sure the water in diesel fuel detection sensor is properly connected.
– If not, clear the fault,
– Carry out a road test (**speed > 12 mph (20 km/h) and engine speed > 1200 rpm**) for more than **30 seconds**.
– If the fault does not reappear, end of fault finding procedure.
– If the fault does recur, go to **step B**.

B) If the sensor is properly connected:
– Bleed the diesel filter unit,
– Velsatis (see **MR 353, 13A, Fuel supply, Diesel filter**),
– Laguna phase 2 (see **MR 395, 13A, Fuel supply, Diesel filter**),
– Laguna phase 1 (see **MR 339, 13, Fuel supply, Diesel filter**),
– Clear the fault.
– Carry out a road test (**speed > 12 mph (20 km/h) and engine speed > 1200 rpm**) for more than **30 seconds**.
***If the fault does not recur**, end the fault finding procedure.*

C) If the fault recurs:
– Check for **continuity and the absence of interference resistance** on the connection between:
Injection computer grey 32-track connector C, track A2 ⟶ **Track 3** of the water detection sensor
Check the power supply to the water detection sensor:
+12 V after relay ⟶ **track 1** water detection sensor
earth ⟶ **track 2** water detection sensor
Carry out the necessary repairs.
If none of these checks reveal any faults:
– Replace the water detection sensor,
– Clear the fault.
– Carry out a road test (**speed > 12 mph (20 km/h) and engine speed > 1200 rpm**) for more than **30 seconds**, to confirm the repair.
Note:
If the level of water in the fuel filter unit is lower than the two electrodes on the sensor, certain driving conditions (on a bend, leaning) may cause the injection warning light **to light up erratically** .

AFTER REPAIR	Deal with any faults. Carry out a road test followed by another check with the diagnostic tool.

GETtheMANUALS.org

DF069 PRESENT	IMPACT DETECTED SIGNAL

NOTES	**Fault finding procedure application conditions:** Only apply the procedure if the fault is present and if the vehicle does not start.
	Special notes: The fault appears when the injection computer receives a frontal impact signal from the Airbag computer via the multiplex network. As soon as the injection computer receives this signal, engine operation is inhibited and the level 2 warning light is lit. Use bornier **Elé. 1681** for any operations on the injection computer connectors.

If the vehicle has been involved in an accident:
Carry out any necessary repairs,
– clear the fault,
– switch off the ignition and wait for the message to appear on the **diagnostic tool: "Loss of dialogue with the computer: EDC16 C3, check the tool connection and the computer supply"**,
– wait for the engine immobiliser indicator light to flash,
– switch on the ignition,
If the fault does not reappear, end of fault finding procedure.
If the fault recurs, carry out fault finding on the **AIRBAG** computer.

If the vehicle has not been involved in an accident, carry out fault finding on the **AIRBAG** computer.

AFTER REPAIR	Deal with any faults. Carry out a road test followed by another check with the diagnostic tool.

GETtheMANUALS.org

DF070 PRESENT OR STORED	CLUTCH SWITCH CIRCUIT 1.DEF : no signal 2.DEF : inconsistent signal

NOTES	**Conditions for applying the fault finding procedure to stored faults:** The fault is declared present after the clutch pedal is depressed, or during a road test.
	Special notes: Use bornier **Elé. 1681** for any operations on the injection computer connectors.

***IMPORTANT:**
Two types of switch are used. Only the track assignments are different:
– the first type uses tracks A1 and B3,
– the second uses tracks 1 and 2.

WARNING
This fault may appear if the wiring harness has been damaged.
Follow the procedure described in the Wiring Check in the Introduction.
This check enables the condition and the conformity of the engine wiring harness to be checked.

Check the conformity and adjustment of the clutch switch (position, connection).
– Display status **ET233 Clutch pedal** :
– when the clutch pedal is not being depressed status **ET233** should be **RELEASED**,
– when the clutch pedal is disengaged status **ET233** should be **DEPRESSED**,
If these checks are not OK, replace the clutch switch.

If these checks are correct:
Check the connections of the clutch pedal switch.
Check the injection computer connections.
Repair if necessary.

Check continuity and make sure there is no interference resistance on the following connection:
Injection computer black 32-track connector A, **track C4** ⟶ **Track 2 or A1*** Clutch pedal switch
Earth ⟶ **Track 1 or B3*** clutch pedal switch
Repair if necessary.
Repair if necessary.
If the fault is still present, contact the Techline.

AFTER REPAIR	Deal with any faults. Carry out a road test followed by another check with the diagnostic tool.

GETtheMANUALS.org

DF091 PRESENT OR STORED	VEHICLE SPEED SIGNAL 1.DEF : inconsistent signal 2.DEF : signal outside upper limit 3.DEF : configuration absent or incorrect 4.DEF : multiplex line connection fault

NOTES	**Conditions for applying the fault finding procedure to stored faults:** The fault is declared present during a road test.
	Special notes: Use bornier **Elé. 1681** for any operations on the injection computer connectors.

Check the ABS computer connections.
Check the injection computer connections.
Repair if necessary.
Carry out a fault finding procedure on the multiplex network and ABS.
Refer to the fault finding notes for the vehicle when dealing with any faults.
If the fault is still present, contact the Techline.

AFTER REPAIR	Deal with any faults. Carry out a road test followed by another check with the diagnostic tool.

GETtheMANUALS.org

DF097 PRESENT OR STORED	CAMSHAFT SENSOR CIRCUIT 1.DEF : no signal 2.DEF : inconsistent signal

NOTES	**Conditions for applying the fault finding procedure to a stored fault:** The fault is declared present after the engine is started or following a road test. A drop in engine speed followed by nominal behaviour from the vehicle is possible.
	Special notes: Use bornier **Elé. 1681** for any operations on the injection computer connectors.

1.DEF ***2.DEF***	***NOTES***	**Priority when dealing with a number of faults:** Deal with fault **DF046 Battery voltage** first if it is present or stored.

Check the camshaft sensor connections.
Check the injection computer connections.
Check that the camshaft sensor is correctly positioned and mounted.
Also check the general condition, (damaged housing, heating up, etc.)
Carry out the necessary repairs.

Check **the continuity and absence of interference resistance** of the following connections:
Injection computer brown 48-track connector **B**, **track D1** ⟶ **Track 2** Camshaft sensor
Injection computer brown 48-track connector **B**, **track A1** ⟶ **Track 1** Camshaft sensor
With the ignition on and the camshaft sensor **connected**:
Use a voltmeter to measure the voltage between **tracks 1** and **3** of the camshaft sensor:
The voltage displayed should be equal to the battery voltage **0.08 V**)
– If the voltage is outside permitted tolerance values, take the measurement again on the connector, with the **camshaft sensor disconnected**,
– If the voltage is still outside the permitted tolerance values with the sensor disconnected, check **the continuity and absence of interference resistance** on the following connection:
Camshaft sensor, **track 3** ⟶ **+ after ignition feed after relay**
– If the measured voltage is correct with the sensor disconnected, measure the camshaft sensor resistance between tracks 2 and 3.
Replace the sensor if its resistance is not 10,250 ± 500 Ω at 20°C.
If the fault is still present, contact the Techline.

AFTER REPAIR	Deal with any faults. Carry out a road test followed by another check with the diagnostic tool.

GETtheMANUALS.org

DF098 PRESENT OR STORED	FUEL TEMPERATURE SENSOR CIRCUIT CC.0 : short circuit to earth CO.1 : short circuit to + 12 V

NOTES	**Conditions for applying the fault finding procedure to a stored fault:** The fault is declared present after an attempt to start engine.
	Special notes: – use bornier **Elé. 1681** for any operations on the injection computer connectors, – the default value is 40°C.

CC.0	***NOTES***	None.

Check the fuel temperature sensor connectors.
Check the injection computer connections.
Repair if necessary.

Measure the fuel temperature sensor **resistance** across **tracks 1** and **2**.
Replace the fuel temperature sensor if the resistance is not approximately:

3820 Ω ± 282 Ω at 20°C
2050 Ω ± 100 Ω at 25°C
810 Ω ± 47 Ω at 50°C

Check the **continuity** and the **insulation** against earth of the following connection:
Injection computer brown 48-track connector **B**, **track H2** ⟶ **Track 1** fuel temperature sensor
Check the continuity and insulation from earth of the following connection:
Injection computer grey 32-track connector **C**, **track F1** ⟶ **Track 2** fuel temperature sensor
If the fault is still present, replace the fuel temperature sensor.

AFTER REPAIR	Deal with any faults. Carry out a road test followed by another check with the diagnostic tool.

GETtheMANUALS.org

DF098 **CONTINUED**	

CO.1	***NOTES***	None.

Check the fuel temperature sensor connectors.
Check the injection computer connections.
Repair if necessary.

Measure the fuel temperature sensor **resistance** across **tracks 1** and **2**.
Replace the fuel temperature sensor if the resistance is not approximately:

3820 Ω ± 282 Ω at 20°C
2050 Ω ± 100 Ω at 25°C
810 Ω ± 47 Ω at 50°C

Check the continuity, insulation, and the absence of interference resistance of the following connection:
Injection computer brown 48-track connector **B**, **track H2** ⟶ **Track 1** fuel temperature sensor
If the fault is still present, replace the fuel temperature sensor.

AFTER REPAIR	Deal with any faults. Carry out a road test followed by another check with the diagnostic tool.

GETtheMANUALS.org

DF114 PRESENT OR STORED	EGR SOLENOID VALVE CIRCUIT 1.DEF : excessive EGR valve flow

NOTES	**Conditions for applying the fault finding procedure to stored faults:** The fault is declared present after: – the engine is started, – a road test.
	Special notes: If the fault is present: – the EGR function is inhibited. Use bornier **Elé. 1681** for any operations on the injection computer connectors.
	Priority when dealing with a number of faults: Apply the procedure for dealing with fault **DF272 EGR valve control circuit** first if it is present or stored.

Check the EGR valve connections.
Check the injection computer connections.
Repair if necessary.

Check the continuity and the absence of interference resistance on the following connections:
Injection computer brown 48-track connector **B**, **track C2** → **Track 1** EGR valve
Injection computer brown 48-track connector **B**, **track D2** → **Track 5** EGR valve

Measure the **resistance** of the EGR valve motor between **tracks 1** and **5**.
If the resistance displayed is not between 1 and 400 Ω, replace the exhaust gas recirculation valve.

When replacing the EGR valve, run command **SC036 Reinitialise programming** to initialise the EGR valve offsets

Check that there are no leaks on the EGR circuit (pipes pierced or damaged) and that the clamps are properly tightened.

AFTER REPAIR	Deal with any faults. Carry out a road test followed by another check with the diagnostic tool.

GETtheMANUALS.org

DF114 CONTINUED	

If the fault is still present, run command **SC036 Reset programming** and select **EGR valve** to reset the EGR valve offsets.
(see **Replacement of components**).
If the valve is jammed or irrevocably seized, replace the EGR valve.

WARNING
A programming procedure is required when the EGR valve is replaced.
Reinitialise the first EGR valve offset and last EGR valve offset parameters.
Refer to **Replacement of components** to carry out this programming.

AFTER REPAIR	Deal with any faults. Carry out a road test followed by another check with the diagnostic tool.

GETtheMANUALS.org

DF118 PRESENT OR STORED	EGR SOLENOID VALVE SERVO-CONTROL 1.DEF : insufficient EGR valve flow 2.DEF : excessive EGR valve flow

NOTES	**Conditions for applying the fault finding procedure to stored faults:** The fault is declared present after: – the engine is started, – a road test.
	Special notes: If the fault is present: – the EGR function is inhibited, – possible fumes at the exhaust pipe. Use bornier **Elé. 1681** for any operations on the injection computer connectors.

Check the EGR valve connections.
Check the injection computer connections.
Repair if necessary.

Check the continuity and the absence of interference resistance on the following connections:
Injection computer brown 48-track connector **B**, **track C2** → **Track 1** EGR valve connector
Injection computer brown 48-track connector **B**, **track D2** → **Track 5** EGR valve connector

Measure the **resistance** of the EGR valve motor between **tracks 1** and **5**.
If the resistance displayed is not between 1 and 400 Ω, replace the EGR valve.

When replacing the EGR valve, run command **SC036 Reinitialise programming** to initialise the EGR valve offsets.

Check that there are no leaks on the EGR circuit (pipes pierced or damaged) and that the clamps are properly tightened.

AFTER REPAIR	Deal with any faults. Carry out a road test followed by another check with the diagnostic tool.

GETtheMANUALS.org

DF118 CONTINUED	

If the fault is still present, run command **SC036 Reset programming** and select **EGR valve** to reset the EGR valve offsets.
(see **Replacement of components**).
If the valve is jammed or irrevocably seized, replace the EGR valve.

WARNING
A programming procedure is required when the EGR valve is replaced. The EGR valve initial offset and EGR valve last offset parameters must be reinitialised. Refer to Replacement of components to carry out this programming.

AFTER REPAIR	Deal with any faults. Carry out a road test followed by another check with the diagnostic tool.

GETtheMANUALS.org

DF176 PRESENT OR STORED	LOW-SPEED FAN ASSEMBLY CIRCUIT CO : open circuit CC.0 : short circuit to earth CC.1 : short circuit to +12 V 1.DEF : signal incoherence

NOTES	**Conditions for applying the fault finding procedure to a stored fault:** The fault is declared present after: – an attempted start, or with engine running, – command **AC038 Low-speed fan unit** run.
	Special notes: Use bornier **Elé. 1681** for all operations on the computer connectors.

CO	***NOTES***	**None.**

Check the **+ 12 V** after relay feed to fan unit relay mounting **R09 track 10**.
Check the condition of the connections and the correct operation of relay **R09**
Replace it if necessary.
Check for **continuity and the absence of interference resistance** on the following connection:

Injection computer connector **C grey track B1** ⟶ Relay mounting **R09 track 11**

Repair if necessary.

CC.0	***NOTES***	None.

Check **the continuity and insulation from earth** of the following connection:

Injection computer supply relay mounting **R8 track 13** ⟶ Relay mounting of the low-speed fan unit **R09 track 10**

Repair if necessary.

AFTER REPAIR	Deal with any faults. Carry out a road test followed by another check with the diagnostic tool.

GETtheMANUALS.org

DF176 **CONTINUED**	

CC.1	***NOTES***	None.

Check the **continuity and insulation from the + 12 V feed** of the following connection:

Injection computer connector **C grey track B1** → Relay mounting **R09 track 11**

Repair if necessary.

1.DEF	***NOTES***	None.

Check the condition of the connections:
– on the low-speed fan unit relay connector,
– on the injection computer grey connector G.
Repair if necessary.
Check the following connections for **continuity and make sure there is no interference resistance**:

Injection computer connector **C grey track B1** → Relay mounting **R09 track 11**

Injection computer supply relay mounting **R8 track 13** → Relay mounting of the low-speed fan unit **R09 track 10**

Repair if necessary.

AFTER REPAIR	Deal with any faults. Carry out a road test followed by another check with the diagnostic tool.

GETtheMANUALS.org

DF177 PRESENT OR STORED	HIGH-SPEED FAN ASSEMBLY CIRCUIT CO : open circuit CC.0 : short circuit to earth CC.1 : short circuit to +12 V 1.DEF : signal incoherence

NOTES	**Conditions for applying the fault finding procedure to stored faults:** The fault is declared present after: – an attempted start, or with engine running, – command **AC039 High-speed fan unit** run.
	Special notes: Use bornier **Elé. 1681** for all operations on the computer connectors.

CO	***NOTES***	None.

Check the **+ 12 V** after relay feed to fan unit relay mounting **R10 track 6**.
Check the condition of the connections and the correct operation of relay **R10**.
Replace it if necessary.
Check the following connection for **continuity and make sure there is no interference resistance**:

Injection computer connector **C grey track F2** ⟶ Relay mounting **R10 track 7**

Repair if necessary.

CC.0	***NOTES***	None.

Check **the continuity and insulation from earth** of the following connection:

Injection computer supply relay mounting **R8 track 13** ⟶ Low speed fan unit relay mounting **R10 track 6**

Repair if necessary

AFTER REPAIR	Deal with any faults. Carry out a road test followed by another check with the diagnostic tool.

GETtheMANUALS.org

DF177 **CONTINUED**	

CC.1	***NOTES***	None.

Check the **continuity and insulation from the + 12 V feed** of the following connection:

Injection computer connector **C grey track B1** → Relay mounting **R10 track 7**

Repair if necessary.

1.DEF	***NOTES***	None.

Check the condition of the connections:
– on the fan unit relay R10 connector,
– on the injection computer grey connector G.
Repair if necessary.
Check the following connections for **continuity and make sure there is no interference resistance**:

Injection computer connector **C grey track F2** → Relay mounting **R10 track 7**

Injection computer supply relay mounting **R8** → Low speed fan unit relay mounting **R10 track 6 track 13**

Repair if necessary

AFTER REPAIR	Deal with any faults. Carry out a road test followed by another check with the diagnostic tool.

GETtheMANUALS.org

DF195 STORED	CAMSHAFT SENSOR / ENGINE SPEED CONSISTENCY 1.DEF : inconsistent signal

NOTES	**Conditions for applying the fault finding procedure to stored faults:** The fault becomes present after an attempt to start.
	Special notes: If the fault is **stored**, clear the fault from the computer memory. Switch off the ignition, start the engine and check that the fault does not reappear. Use bornier **Elé. 1590** for all operations on the injection computer connectors.

Check the engine **speed sensor** and **camshaft sensor** connectors.
Check the injection computer connections.
Repair if necessary.
Check the **continuity and the absence of interference resistance (connector disconnected)** on the following connections:

injection computer **connector B, track A1** ⟶ **track 1** of the camshaft sensor.
injection computer **connector B, track D1** ⟶ **track 2** of the camshaft sensor.
engine management computer **connector B, track B1** ⟶ **track 1** of the engine speed sensor.
engine management computer **connector B, track C1** ⟶ **track 2** of the engine speed sensor.

Repair if necessary.

With the ignition on and the camshaft sensor **connected**:
Use a voltmeter to measure the voltage between **tracks 1** and **3** of the camshaft sensor:
The voltage displayed should be equal to the battery voltage **0.08 V**)
– If the voltage is outside permitted tolerance values, take the measurement again on the connector, with the **camshaft sensor disconnected**,
– If the voltage is still outside permitted tolerance values with the sensor disconnected.
Check **for continuity and absence of interference resistance** on the following connection:

Camshaft sensor, **track 3** ⟶ **+ after ignition feed after relay**

– If the measured voltage is correct with the sensor disconnected.
Measure the camshaft sensor **resistance** between **tracks 1** and **3**.
Replace the sensor if its resistance is not **10,250 ± 500 Ω at 20°C**

Check that the engine speed sensor is correctly mounted and that the flywheel target is not damaged.
Check that the air gap between the engine speed sensor and the flywheel is **0.5 to 1.8 mm**.
Measure the **resistance** of the engine speed sensor between **tracks 1** and **2**.
Replace the sensor if its resistance is not **250 ± 50 Ω at 20°C**.

AFTER REPAIR	Deal with any faults. Carry out a road test followed by another check with the diagnostic tool.

GETtheMANUALS.org

DF209 PRESENT OR STORED	EGR POSITION SENSOR CIRCUIT CO.0 : open circuit or short circuit to earth CC.1 : Short circuit to +12 V

NOTES	**Conditions for applying the fault finding procedure to stored faults:** – the engine is started, – a road test.
	Special notes: If the fault is present: – the EGR offset fault finding function is deactivated and the OBD warning light will illuminate after three consecutive driving cycles (starting + 5 seconds + switch off the ignition and wait for the message to appear on the **diagnostic tool: "Loss of dialogue with the computer: EDC16 C3, check the tool connection and the computer supply"**). Use bornier **Elé. 1681** for any operations on the injection computer connectors.
	Priorities when dealing with a number of faults : Deal with fault **DF012 Sensor feed voltage no. 2** first, if it is present or stored.
	IMPORTANT This fault can result in a rapid and significant fouling of the particle filter. If the EGR valve needs to be replaced to resolve the fault, all faults must then be cleared.

WARNING
This fault may appear if the wiring harness has been damaged.
Follow the procedure described in the Wiring Check in the Introduction.
This check enables the condition and the conformity of the engine wiring harness to be checked.

AFTER REPAIR	Deal with any faults. Carry out a road test followed by another check with the diagnostic tool.

GETtheMANUALS.org

DF209 **CONTINUED 1**	

CO.0	***NOTES***	**None.**

Check the EGR valve connections.
Check the injection computer connections.
Repair if necessary.

Check the **continuity** and **insulation to earth** of the following connections:
Injection computer brown 48-track connector B, **track J2** ⟶ **Track 6** EGR valve
Injection computer brown 48-track connector B, **track F4** ⟶ **Track 2** EGR valve
Check the continuity of the following connection:
Injection computer grey 32-track connector C, **track C2** ⟶ **Track 4** EGR valve
Repair if necessary.

If the fault is still present, run command **SC036 Reset programming** and select **EGR valve** to reset the EGR valve offsets.
(see **Replacement of components**).
If the valve is jammed or irrevocably seized, replace the EGR valve.

WARNING
A programming procedure is required when the EGR valve is replaced. The EGR valve initial offset and EGR valve last offset parameters must be reinitialised. Refer to Replacement of components to carry out this programming.

AFTER REPAIR	Deal with any faults. Carry out a road test followed by another check with the diagnostic tool.

GETtheMANUALS.org

DF209 **CONTINUED 2**	

CC.1	***NOTES***	None.

Check the EGR valve connections.
Check the injection computer connections.
Repair if necessary.

Check **for continuity** and **insulation to + 12 V** on the following connections:
Injection computer brown 48-track connector B, **track J2** → **Track 6** EGR valve
Injection computer grey 32-track connector C, **track C2** → **Track 4** EGR valve
Injection computer brown 48-track connector B, **track F4** → **Track 2** EGR valve
Repair if necessary.

Ensure the presence of **+ 5 V** on **track 2** of the EGR valve.

If the fault is still present, run command **SC036 Reset programming** and select **EGR valve** to reset the EGR valve offsets.
(see **Replacement of components**).
If the valve is jammed or irrevocably seized, replace the EGR valve.

WARNING
A programming procedure is required when the EGR valve is replaced.
Reinitialise the first EGR valve offset and last EGR valve offset parameters.
Refer to the **Replacement of components** section to carry out this programming.

AFTER REPAIR	Deal with any faults. Carry out a road test followed by another check with the diagnostic tool.

GETtheMANUALS.org

DF226 PRESENT OR STORED	DAMPER VALVE CIRCUIT CC.1 : Short circuit to + 12 V. CC.0 : Short circuit to earth. CO : Open circuit. CC : Short circuit. 1.DEF : Internal electrical fault. 2.DEF : Unidentified electrical fault. 3.DEF : Value outside the limits.

NOTES	**Conditions for applying the fault finding procedure to a stored fault:** The fault is declared present after: – the engine is started – a road test – an actuator command **AC012 Damper valve** – switching off the ignition and waiting for the message to appear on the **diagnostic tool: "Loss of dialogue with the computer: EDC16 C3, check the tool connection and the computer supply"**.
	Special notes: If the fault is present: – it is difficult or even impossible to start the vehicle, – the engine stops noisily, – the **level 1** warning light is lit. Use bornier **Elé. 1681** for any operations on the injection computer connectors.
	IMPORTANT This fault can result in a rapid and significant fouling of the particle filter.

CC.1	***NOTES***	After any work on the damper valve, it is necessary to use **SC036 Reinitialise programming** and select **Damper valve**, then switch off the ignition and wait for the message to appear on the **diagnostic tool: "Loss of dialogue with the computer: EDC16 C3, check the tool connection and the computer supply"**.

Check the damper valve connections.
Check the injection computer connections.
Repair if necessary.

AFTER REPAIR	Deal with any faults. Carry out a road test followed by another check with the diagnostic tool.

GETtheMANUALS.org

DF226 **CONTINUED 1**	

Check **the continuity and insulation to + 12 V** on the following connections:

Earth ⟶ **Track 1** of the damper valve
Injection computer brown 48-track connector B, **track J4** ⟶ **Track 3** of the damper valve
Injection computer brown 48-track connector B, **track B2** ⟶ **Track 4** of the damper valve

Repair if necessary

If the fault is still present, replace the damper valve.

CO ***CC.0***	***NOTES***	After any work on the damper valve, use **SC036 Reinitialise programming** and select **Damper valve**, then switch off the ignition and wait for the message to appear on the **diagnostic tool: "Loss of dialogue with the computer: EDC16 C3, check the tool connection and the computer supply"**.

Check the damper valve connections.
Check the injection computer connections.
Repair if necessary.

Check the **continuity and insulation to earth** of the following connections:

Injection computer brown 48-track connector B, **track J4** ⟶ **Track 3** of the damper valve
Injection supply relay mounting, **Track 13** ⟶ **Track 2** of the damper valve
Injection computer brown 48-track connector B, **track B2** ⟶ **Track 4** of the damper valve

Repair if necessary.
If the fault is still present, replace the damper valve.

AFTER REPAIR	Deal with any faults. Carry out a road test followed by another check with the diagnostic tool.

GETtheMANUALS.org

DF226 **CONTINUED 2**	

CC	***NOTES***	After any work on the damper valve, use **SC036 Reinitialise programming** and select **Damper valve**, then switch off the ignition and wait for the message to appear on the **diagnostic tool: "Loss of dialogue with the computer: EDC16 C3, check the tool connection and the computer supply"**.

Check the damper valve connections.
Check the injection computer connections.
Repair if necessary.

Check for **continuity, insulation and the absence of interference resistance** on the following connections:

Earth → **Track 1** of the damper valve
Injection supply relay mounting, **Track 13** → **Track 2** of the damper valve
Injection computer brown 48-track connector B, **track J4** → **Track 3** of the damper valve
Injection computer brown 48-track connector B, **track B2** → **Track 4** of the damper valve

Repair if necessary.
If the fault is still present, replace the damper valve.

AFTER REPAIR	Deal with any faults. Carry out a road test followed by another check with the diagnostic tool.

GETtheMANUALS.org

DF226 **CONTINUED 3**	

1.DEF ***to 3.DEF***	***NOTES***	After any work on the damper valve, use **SC036 Reinitialise programming** and select **Damper valve**, then switch off the ignition and wait for the message to appear on the **diagnostic tool: "Loss of dialogue with the computer: EDC16 C3, check the tool connection and the computer supply"**.

Check the damper valve connections.
Check the injection computer connections.
Repair if necessary.

Check for **continuity, insulation and the absence of interference resistance** on the following connections:

Earth → **Track 1** of the damper valve
Injection supply relay mounting, **Track 13** → **Track 2** of the damper valve
Injection computer brown 48-track connector B, **track J4** → **Track 3** of the damper valve
Injection computer brown 48-track connector B, **track B2** → **Track 4** of the damper valve

Repair if necessary.

If the fault is still present, **check that the computer output is working correctly**.
Damper valve connected:
– connect the **negative** terminal of the voltmeter to **track 1** of the damper valve,
– connect the **positive** terminal of the voltmeter to **track 3** of the damper valve,
– use command **AC012 Damper valve** :
– The voltmeter should display **ten cycles** of two successive voltages: **~ 2.5 V** (OCR of **20%**) then **~ 8.75 V** (*OCR of **70%**).
If the voltmeter does not indicate any control while the command is running (ten 1-second cycles), contact the Techline.

*OCR: Opening Cyclic Ratio

AFTER REPAIR	Deal with any faults. Carry out a road test followed by another check with the diagnostic tool.

GETtheMANUALS.org

DF227 PRESENT OR STORED	SWIRL FLAP CC.0 : short circuit to earth CC.1 : short circuit to +12 V

NOTES	**Conditions for applying the fault finding procedure to stored faults:** The fault is declared present after the engine has been started.
	Special notes: Use bornier **Elé. 1681** for all operations on the computer connectors. This fault does not apply to VELSATIS PH2 Vdiag 14.

WARNING
The swirl flap is present but never controlled by the injection computer.
Never replace the swirl flap.

CC.1	***NOTES***	None.

Check the condition of the turbulence flap connector and repair if necessary.
Check **the continuity and insulation from + 12 V** of the following connection:
Swirl flap 2-track connector, **track 1** ⟶ Track **M1** brown connector **B** of the injection computer
Repair if necessary.

CC.0	***NOTES***	None.

Check the condition of the turbulence flap connector and repair if necessary.
Check **the continuity and insulation against earth** of the following connection:
Swirl flap 2-track connector, **track 2** ⟶ **+ after ignition feed** after relay
Repair if necessary.

AFTER REPAIR	Deal with any faults. Carry out a road test followed by another check with the diagnostic tool.

GETtheMANUALS.org

DF238 PRESENT OR STORED	THERMOPLUNGER No.3 RELAY CIRCUIT CO : open circuit CC.0 : short circuit to earth CC.1 : short circuit to +12 V 1.DEF : inconsistent signal

NOTES	**Conditions for applying the fault finding procedure to stored faults:** The fault is displayed as present following an engine start or following actuator command **AC031 Thermoplunger relay no. 3**.
	Special notes: Use bornier **Elé. 1681** for all operations on the computer connectors.

1.DEF ***CO***	***NOTES***	None.

Check for **+12 V after ignition feed** on relay mounting **R5 track 37**.
If there is no **+ 12 V** feed, refer to the fault interpretation **DF015 Main relay control circuit**.
Check the condition of the connectors of the thermoplunger **no. 3** relay (**R5**) and of the injection computer.
Repair if necessary.
Check the condition and the correct operation of the relay.**R5** Replace if defective.
Check for **continuity and the absence of interference resistance** on the following connection:
Injection computer connector **B track M3** ⟶ Relay mounting **R5 track 37**
Relay mounting **R5 track 35** ⟶ Relay mounting **R8 track 13**
Repair if necessary.

CC.0	***NOTES***	None.

Check the condition and the correct operation of the relay.**R5**
Replace if defective.
Check the **continuity, absence of interference resistance and the insulation** from earth of the following connection:
Relay mounting **R5 track 35** ⟶ Relay mounting **R8 track 13**
Repair if necessary.

AFTER REPAIR	Deal with any faults. Carry out a road test followed by another check with the diagnostic tool.

GETtheMANUALS.org

DF238 **CONTINUED**	

CC.1	***NOTES***	None.

Check the condition and the correct operation of the relay.**R5** Replace if defective.
Check the insulation from the + 12 V feed of the following connection:
Injection computer brown connector **B, track M3** ⟶ Relay mounting **R5 track 37**
Repair if necessary.

AFTER REPAIR	Deal with any faults. Carry out a road test followed by another check with the diagnostic tool.

GETtheMANUALS.org

DF239 PRESENT OR STORED	THERMOPLUNGER RELAY CIRCUIT N° 2 CO : open circuit CC.0 : short circuit to earth CC.1 : short circuit to +12 V 1.DEF : inconsistent signal

NOTES	**Conditions for applying the fault finding procedure to stored faults:** The fault is displayed as present after an engine start or actuator command **AC064 Thermoplunger no.2 relay**.
	Special notes: Use bornier **Elé. 1681** for all operations on the computer connectors.

1.DEF ***CO***	***NOTES***	None.

Check for **+12 V after ignition feed** on relay mounting **R11 track 3**.
If there is no **+ 12 V**, refer to the fault interpretation **DF125 Main relay control circuit**.
Check the condition of the connectors of thermoplunger **no. 2 relay (R11)** and of the injection computer.
Repair if necessary.
Check the condition and correct operation of relay **R11**. Replace if defective.
Check for **continuity and the absence of interference resistance** on the following connection:
Injection computer **grey connector C track A1** ⟶ Relay mounting **R11 track 2**
Relay mounting **R11 track 3** ⟶ Relay mounting **R8 track 13**
Repair if necessary.

CC.0	***NOTES***	None.

Check the condition and the correct operation of relay **R1.**
Check **insulation** against earth of the following connection:
Relay mounting **R11 track 3** ⟶ Relay mounting **R8 (injection computer supply relay) track 13**
Repair if necessary.

AFTER REPAIR	Deal with any faults. Carry out a road test followed by another check with the diagnostic tool.

GETtheMANUALS.org

DF239 **CONTINUED**	

CC.1	***NOTES***	None.

Check the condition and correct operation of relay **R11**. Replace if defective.
Check the insulation from the + 12 V feed of the following connection:
Injection computer **grey connector C, track A1** ⟶ Relay mounting **R11 track 2**
Repair if necessary.

AFTER REPAIR	Deal with any faults. Carry out a road test followed by another check with the diagnostic tool.

GETtheMANUALS.org

DF240 PRESENT OR STORED	THERMOPLUNGER N° 1 RELAY CIRCUIT CO : open circuit CC.0 : short circuit to earth CC.1 : short circuit to +12 V 1.DEF : inconsistent signal

NOTES	**Conditions for applying the fault finding procedure to stored faults:** The fault is displayed as present after an engine start or actuator command **AC063 Thermoplunger no. 1 relay**.
	Special notes: Use bornier **Elé. 1681** for all operations on the computer connectors.

1.DEF ***CO***	***NOTES***	None.

Check for **+ 12 V** after ignition feed on relay mounting **R1 track 63**.
If there is no **+ 12 V** feed, refer to the fault interpretation **DF015 Main relay control circuit**.
Check the condition of the connectors of the thermoplunger **no. 1** relay **(R1)** and of the injection computer.
Repair if necessary.
Check the condition and the correct operation of relay **R1.** Replace if necessary.
Check for **continuity and the absence of interference resistance** on the following connection:
Injection computer **brown connector B track K4** ⟶ Relay mounting **R1 track 63**
Relay mounting **R1 track 65** ⟶ Relay mounting **R8 track 13**
Repair if necessary.

CC.0	***NOTES***	None.

Check the condition and the correct operation of relay **R1.**
Replace if defective.
Check **insulation** against earth of the following connection:
Relay mounting **R1 track 65** ⟶ Relay mounting **R8 (injection computer supply relay) track 13**
Repair if necessary.

AFTER REPAIR	Deal with any faults. Carry out a road test followed by another check with the diagnostic tool.

GETtheMANUALS.org

DF240 **CONTINUED**	

CC.1	***NOTES***	None.

Check the condition and the correct operation of relay **R1.** Replace if defective.
Check the insulation from the + 12 V feed of the following connection:
Injection computer **brown connector B track K4** ⟶ Relay mounting **R1 track 63**
Repair if necessary.

AFTER REPAIR	Deal with any faults. Carry out a road test followed by another check with the diagnostic tool.

GETtheMANUALS.org

DF250 PRESENT OR STORED	ELECTRONIC STABILITY PROGRAM FUNCTION 1.DEF : CAN connection fault 2.DEF : inconsistent signal

NOTES	**Conditions for applying the fault finding procedure to stored faults:** The fault is declared present after a road test.

1.DEF ***2.DEF***	***NOTES***	None.

Carry out fault finding on the ABS computer.
Carry out a multiplex network test and a fault finding procedure on any faults.
If the fault is still present, contact the Techline.

AFTER REPAIR	Deal with any faults. Carry out a road test followed by another check with the diagnostic tool.

GETtheMANUALS.org

DF272 PRESENT OR STORED	EGR VALVE CONTROL CIRCUIT 1.DEF : blocked valve open 2.DEF : blocked valve closed

NOTES	**Conditions for applying the fault finding procedure to a stored fault:** The fault is declared present after a road test.
	Special notes: The EGR function is deactivated if several faults with **DF226 Damper valve circuit** are present. If **1.DEF** is present, – the **level 1** warning light is lit, – the vehicle performance is reduced Use bornier **Elé. 1681 or Elé. 1590** for all operations on the injection computer connectors.

1.DEF ***2.DEF***	***NOTES***	None.

Check the EGR valve connections. Check the injection computer connections. Repair if necessary.
Check the continuity and the absence of interference resistance on the following connections: Injection computer brown 48-track connector **B**, **track C2** ⟶ **Track 1** EGR valve connector Injection computer brown 48-track connector **B**, **track D2** ⟶ **Track 5** EGR valve connector
Measure the **resistance** of the EGR valve motor between **tracks 1** and **5**. If the resistance displayed is not between 1 and 400 Ω, replace the EGR valve.
When replacing the EGR valve, run command **SC036 Reinitialise programming** to initialise the EGR valve offsets
Check that there are no leaks on the EGR circuit (pipes pierced or damaged) and that the clamps are properly tightened.

GETtheMANUALS.org

DF272 CONTINUED	

If the fault is still present, run command **SC036 Reset programming** and select **EGR valve** to reset the EGR valve offsets.
(see **Replacement of components**).
If the valve is jammed or irrevocably seized, replace the EGR valve.

WARNING
A programming procedure is required when the EGR valve is replaced.
Reinitialise the **first EGR valve offset** and **last EGR valve offset** parameters.
Refer to the **Replacement of components** section to carry out this programming.

GETtheMANUALS.org

DF276 PRESENT OR STORED	INJECTOR CODE PROGRAMMING 1.DEF : internal electronic fault during programming 2.DEF : no code stored

NOTES	**Conditions for applying the fault finding procedure to a stored fault:** The fault is declared present after: – replacing injector(s), – replacing and programming the injection computer.
	Special notes: If the fault is present: – the engine speed is limited, – the level 1 warning light is lit.

1.DEF	***NOTES***	**None.**

Program the injector codes using command **SC002 Enter injector codes**. Carry out the procedure described in the **Interpretation of commands** section.
If the fault is still **present** after switching off the ignition and waiting for the message to appear on the **diagnostic tool: "Loss of dialogue with the computer: EDC16 C3, check the tool connection and the computer supply"**, then re-establishing dialogue.
Follow the interpretation of command **SC002 Entering injector codes**. If the fault is still present, contact the techline. Otherwise clear the fault memory using **RZ007 Fault memory**.

2.DEF	***NOTES***	This fault appears on any blank computer (new or recently reprogrammed).

WARNING
A computer without the IMA option can be replaced by a computer with this option. The codes have therefore not been saved during command SC003 Save computer data. In this case, status ET104 Injector code operation becomes YES, fault DF276 Program injector codes will be present, and the engine operates in defect mode.
Program the injector codes using command **SC002 Enter injector codes**.
Carry out the procedure described in the **Interpretation of commands** section.
If the fault is still **present** after the ignition is switched off and after waiting for the **diagnostic tool message "No dialogue with the computer: EDC16 C3, check the tool connection and the computer supply"**, then a dialogue is established again,
Follow the interpretation of command **SC002 Entering injector codes**.
If the fault is still present, contact the techline.
Otherwise clear the fault memory using **RZ007 Fault memory**.

AFTER REPAIR	Deal with any faults. Carry out a road test followed by another check with the diagnostic tool.

GETtheMANUALS.org

DF304 PRESENT OR STORED	EGR BY-PASS CIRCUIT CO : open circuit CC.0 : short circuit to earth CC.1 : short circuit to +12 V 1.DEF : signal outside lower limit

NOTES	**Conditions for applying the fault finding procedure to a stored fault:** The fault is declared present after the engine has been started.
	Special notes: If the fault is present: – the exhaust fumes sent to the inlet are no longer cooled, – no customer complaint.

CO ***1.DEF***	***NOTES***	None.

Check the connectors of the EGR by-pass solenoid valve, and of the injection computer.
Repair if necessary.
Check the **continuity and the absence of interference resistance** of the following connections:
Injection computer brown 48-track connector **B**, **track L3** ⟶ **Track 1** by-pass solenoid valve connector
EGR by-pass solenoid valve connector **track 2** ⟶ Relay mounting R8 **track 13**
Repair if necessary.

CC.0	***NOTES***	None.

Check the **continuity, absence of interference resistance and the insulation** from earth of the following connection:
By-pass solenoid valve connector **track 2** ⟶ Relay mounting R8 **track 13**
Repair if necessary.

CC.1	***NOTES***	None.

Check the **continuity, absence of interference resistance and insulation** from + 12 V for the following connection:
Injection computer brown 48-track connector **B**, **track L3** ⟶ **Track 1** by-pass solenoid valve connector
Repair if necessary.

AFTER REPAIR	Deal with any faults. Carry out a road test followed by another check with the diagnostic tool.

GETtheMANUALS.org

DF308 PRESENT OR STORED	CLOGGED PARTICLE FILTER

NOTES	**Conditions for applying the fault finding procedure to a stored fault:** The fault is declared present after the engine is started or following a road test.
	Special notes: If the fault is present: – particle filter regeneration is inhibited, – the EGR function is inhibited, – the vehicle performance is reduced, – the **level 1** warning light is lit and a warning message (or light) is displayed on the instrument panel.
	Priorities when dealing with a number of faults : Firstly, deal with the following faults: – **DF315 Particle filter differential pressure sensor** if it is present. – **DF308** if **DF315** is stored. – **DF717 Particle filter upstream pressure** if it is present or stored. – **DF226 Damper valve circuit** if it is present or stored. – **DF272 EGR valve control circuit** if it is present or stored. – **DF309 Particle filter downstream temperature sensor** if it is present or stored. – **DF310 Particle filter upstream temperature sensor** if it is present or stored.

The fault appears if the weight of soot contained in the particle filter exceeds 45 g for Vdiag 08 and 10, or 48 g for Vdiag 14.
Check the air circuit. Run **test 3 Turbocharged air circuit check.**
Check that there are no leaks or blockages in the exhaust pipe.
Repair if necessary.
Carry out an After-Sales regeneration. Run command **SC017 Particle filter regeneration** (see **Interpretation of commands**).
Clear fault DF308 Present or Stored.
If the fault is still present, contact the Techline.

AFTER REPAIR	Deal with any faults. Carry out a road test followed by another check with the diagnostic tool.

GETtheMANUALS.org

DF309 PRESENT OR STORED	PARTICLE FILTER DOWNSTREAM TEMPERATURE SENSOR CC.0 : Short circuit to earth CO.1 : Short circuit or open circuit to + 12 V 1.DEF : Signal outside upper limit

NOTES	**Conditions for applying the fault finding procedure to a stored fault:** The fault becomes present if: – ignition is on (**CC.0**), – following a road test, engine warm (**CO.1**).
	IMPORTANT **The particle filter downstream temperature sensor only measures temperatures greater than 50°C.** **This fault does not apply to VELSATIS phase 2 Vdiag 14.**

Check the condition of the particle filter downstream temperature sensor connector.
Check the condition of the injection computer connector.
If any connectors are faulty and there is a repair procedure (**see Technical Note 6015A, Repairing electrical wiring, Wiring: Precautions for repair**), repair the connector, otherwise replace the wiring.

Check the **continuity** and **insulation** from **+12 V** and from **earth** on the following connections:

Injection computer connector **B** brown 48-track, **track K3**	→	**track 2** particle filter downstream temperature sensor connector
injection computer grey connector **C**, **track E3**	→	**track 1** particle filter downstream temperature sensor connector

If any of the connections are faulty and there is a repair method (**see Technical Note 6015A, Electrical wiring repair, Wiring: precautions for repairs**), repair the wiring; otherwise replace the wiring.

If the fault is still present, replace the particle filter downstream temperature sensor.

AFTER REPAIR	Deal with any faults. Carry out a road test followed by another check with the diagnostic tool.

GETtheMANUALS.org

DF310 PRESENT OR STORED	PARTICLE FILTER UPSTREAM TEMPERATURE SENSOR CC.0 : Short circuit to earth CO.1 : Short circuit or open circuit to + 12 V 1.DEF : Signal outside upper limit

NOTES	**Conditions for applying the fault finding procedure to a stored fault:** The fault becomes present if: – ignition is on (**CC.0**), – following a road test, engine warm (**CO.1**).
	Special notes: If the fault is present: – particle filter regeneration is inhibited, – the **level 1** warning light is lit, – the **OBD** warning light will illuminate after three consecutive driving cycles (**starting + 5 seconds + switch off the ignition and wait** for the message to appear on the **diagnostic tool: "Loss of dialogue with the computer: EDC16 C3, check the tool connection and the computer supply"**).
	IMPORTANT: The particle filter upstream temperature sensor only measures temperatures greater than 50°C.

Check the condition of the particle filter upstream temperature sensor connector.
Check the condition of the engine management computer connector.
If one of the connectors is faulty and there is a repair procedure (**see Technical Note 6015A, Electrical wiring repair, Wiring: precautions for repair**), repair the connector, otherwise replace the wiring.

Check the **continuity** and **insulation** from **+12 V** and from **earth** on the following connections:

Injection computer, brown 48-track connector **B**, **track H3**	→	**track 2** particle filter upstream temperature sensor connector
Injection computer brown 48-track connector **B**, **track A1**	→	**track 1** particle filter upstream temperature sensor connector

If any of the connections are faulty and there is a repair method (**see Technical Note 6015A, Electrical wiring repair, Wiring: precautions for repairs**), repair the wiring; otherwise replace the wiring.

If the fault is still present, replace the particle filter upstream temperature sensor.

AFTER REPAIR	Deal with any faults. Carry out a road test followed by another check with the diagnostic tool.

GETtheMANUALS.org

DF311 PRESENT OR STORED	FAILED REGENERATIONS LIMIT EXCEEDED

NOTES	**Conditions for applying the fault finding procedure to a stored fault:** The fault is declared present after the engine is started or following a road test.
	Special notes: If the fault is present: – particle filter regenerations when driving are inhibited, – the **level 1** warning light is lit.
	Priorities when dealing with a number of faults: Firstly, deal with the following faults: – **DF308 Particle filter clogged** if it is present or stored. – **DF315 Particle filter differential pressure sensor** if it is present or stored. – **DF717 Particle filter upstream pressure** if it is present or stored. – **DF055 Turbocharging pressure regulation circuit** if it is present or stored. – **DF309 Particle filter downstream temperature sensor** if it is present or stored. – **DF310 Particle filter upstream temperature sensor** if it is present or stored. – **DF272 EGR valve control circuit** if it is present or stored.

The fault appears after 11 failed attempts at regeneration while driving.
Check the air circuit. Run **test 3 Turbocharged air circuit check**.
Check that there are no leaks or blockages in the exhaust pipe.
Repair if necessary.
– Carry out an After-Sales regeneration.
– Follow the procedure for command **SC017 Particle filter regeneration** (see **Interpretation of commands**).
If the fault is still present, contact the Techline.

AFTER REPAIR	Deal with any faults. Carry out a road test followed by another check with the diagnostic tool.

GETtheMANUALS.org

DF312 PRESENT OR STORED	SPEED REQUEST

NOTES	**Conditions for applying the fault finding procedure to a stored fault:** The fault is declared present after the engine is started or following a road test.
	Special notes: If the fault is present, – the special **Regenerate particle filter** warning light is illuminated, or a warning message is displayed on the instrument panel. – The vehicle needs to be driven specially to activate particle filter regeneration during driving.
	Priorities when dealing with a number of faults: Firstly, deal with the following faults: – **DF308 Particle filter clogged** if it is present or stored, – **DF311 Failed regenerations limit exceeded** if it is present. – **DF315 Particle filter diff*. pressure sensor** if it is present or stored, – **DF717 Particle filter upstream pressure** if it is present or stored.

The fault appears:
– after 8 failed regeneration attempts when driving or if the weight of soot contained in the particle filter is above 42g for Vdiag 14 and 40 g for Vdiag 08 and 10.)
– if the weight of soot contained in the particle filter is above 42 g for Vdiag 14 and 40 g for Vdiag 08 and 10.

PART A

The flow chart on the following page allows analysis of the driving profile and the causes for this fault being activated

AFTER REPAIR	Deal with any faults. Carry out a road test followed by another check with the diagnostic tool.

GETtheMANUALS.org

DF312 CONTINUED 1

Repair request with **DF312 Speed request** present or stored ONLY

Read the information in the **Particle filter history sub-function: PR784 to PR793 DF312 record No. 1 to No. 10**

PR784 to PR793 are all equal to 0 miles (0 km)?

yes

no

Among these parameters (PR784 to PR793):
- Find the parameter with the highest mileage: it is the **Mileage of the last DF312**.
- Note the parameter index on the order of repair with the relevant mileage value. E.g.: PR787 = 2794 miles (4657 Km)

Read the information in the **Particle filter history** sub-function: **PR794** to **PR803 Regeneration failure records no. 1 to no. 10**

Is at least one PR794 to PR803 = 19,660 miles (32,766 km)?

yes

no

Identify the mileages from the values of **parameters PR794** to **PR803 Stored regeneration failures No. 1 to No. 10** that are between the **Mileage of the last DF312** and the **Mileage of the last DF312** - 120 miles (200 km). These are the **mileages of the last failures**.
Example: 2674 miles (4457 km) < PR801 = 2760 miles (4600 km) < 2794 miles (4657 km)

A

B

AFTER REPAIR	Deal with any faults. Carry out a road test followed by another check with the diagnostic tool.

GETtheMANUALS.org

DF312 CONTINUED 2	

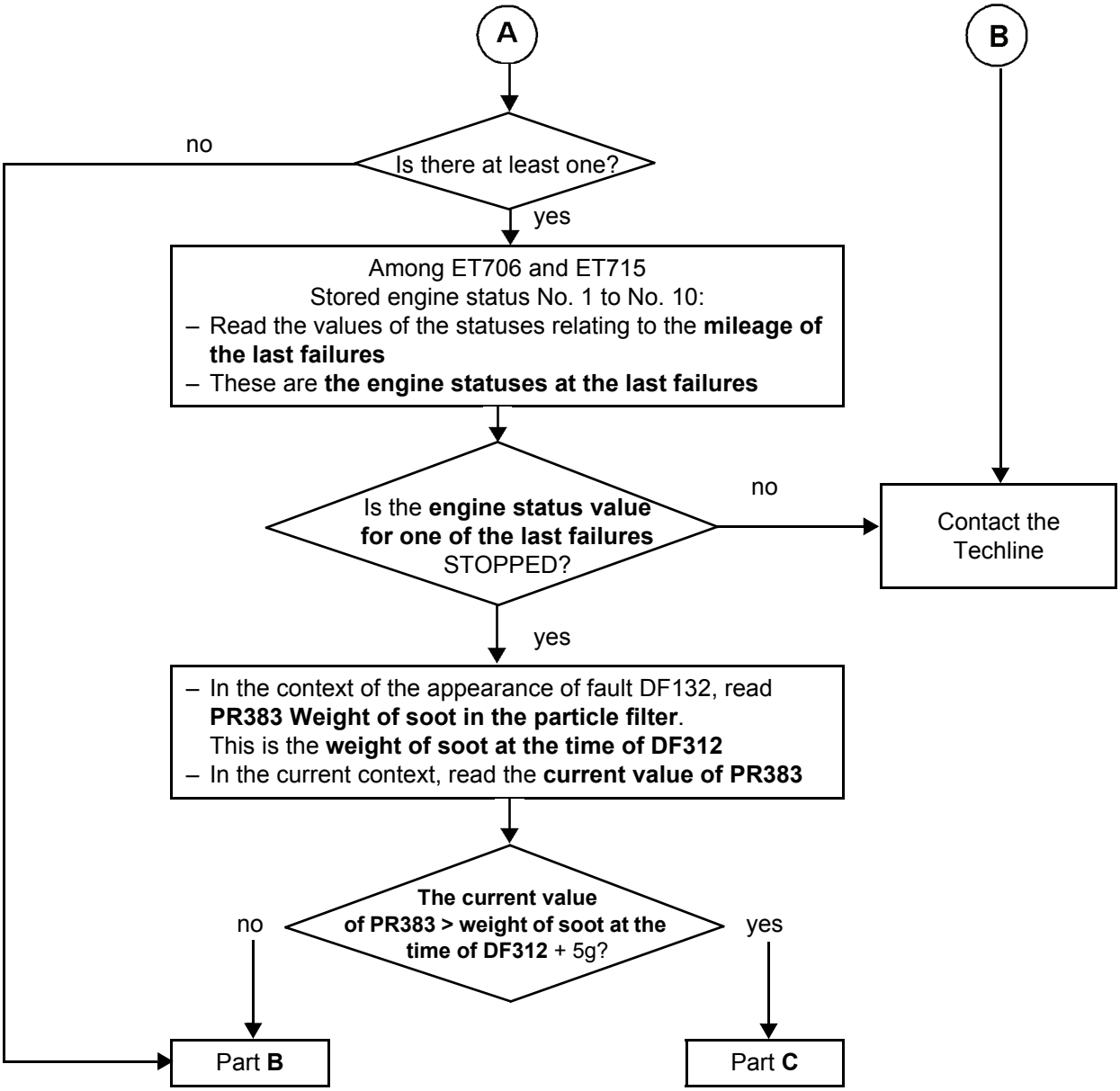

AFTER REPAIR	Deal with any faults. Carry out a road test followed by another check with the diagnostic tool.

GETtheMANUALS.org

DF312 CONTINUED 3	

PART B

1 - **No particle filter regeneration.**

2 - Write on the order of repair the parameter and status relating to the last failure:

– Mileage of the last DF312.

– Mileage of the last failures.

– Engine statuses of the last failures.

E.g.: PR787 = 2794 miles (4657 km); PR801 = 2760 miles (4600 km); engine status = STOPPED

3 - **Interpretation of the values written on the repair order by the service advisor for the customer:**

Before the last occurrence **of the Particle Filter warning light or message** (which appeared at the **Mileage of the last DF312**), the customer had not adhered to the driving recommendations: the failure that occurred at the **Mileage of the last failure** is due to the engine being switched off.

4 - Explain to the customer the procedure to turn off the warning light, referring to the parameters written in the repair order: see **PART D**.

PART C

Check the air circuit. Run **test 3 Turbocharged air circuit check.**

1 - Carry out a regeneration in the Renault dealership with the **approval of the Techline**.

2 - Change the oil and replace the oil filter if a message on the diagnostic tool requests it.

3- Run command **SC036 Reinitialise programming** and select **After particle filter regeneration**.

4 - Explain to the customer the procedure for regeneration while driving to avoid unnecessary repairs: see **PART D**.

.

AFTER REPAIR	Deal with any faults. Carry out a road test followed by another check with the diagnostic tool.

GETtheMANUALS.org

DF312 CONTINUED 4	

PART D
Procedure to switch off the Particle filter message or warning light on the instrument panel.

Certain types of driving can result in the Particle filter message or warning light from being switched on and the fault **DF312 Speed request** to appear.
The fault appears:
- **after 8 failed regeneration attempts when driving or if the weight of soot contained in the particle filter is above 42g for Vdiag 14 and 40 g for Vdiag 08 and 10.)**
- **if the weight of soot contained in the particle filter is above 42 g for Vdiag 14 and 40 g for Vdiag 08 and 10.**

The customer must carry out a specific driving operation (cf. vehicle user manual) that consists of:
1. When the engine is warm, drive at a speed greater than **48 mph (80 km/h)** for **2 minutes** to trigger the regeneration procedure.
2. Continue to drive at an average speed of **48 mph (80 km/h)** until the Particle filter warning light or message on the instrument panel goes out. In order for the procedure to succeed, it is necessary to drive without stopping, without stopping the engine or to leave the engine running at idle speed for an extended period of time. The regeneration time depends on the vehicle and the driving conditions but should last for **20 minutes maximum**.
3. If regeneration fails when driving (the warning light does not go out or the SERVICE warning light comes on), check the air circuit. Run **test 3 Turbocharged air circuit check.** Check that there are no leaks or blockages in the exhaust pipe. Repair if necessary. Carry out particle filter regeneration within the Renault network. Run command **SC017 Particle filter regeneration** (see **Interpretation of commands**).

If the fault is still present, contact the Techline.
.

AFTER REPAIR	Deal with any faults. Carry out a road test followed by another check with the diagnostic tool.

GETtheMANUALS.org

DF315 PRESENT OR STORED	PARTICLE FILTER DIFFERENTIAL PRESSURE SENSOR CO : Open circuit CO.0 : Open circuit or short circuit to earth CC.1 : Short circuit to + 12 V 1.DEF : Inconsistency of the signal 2.DEF : Signal outside lower limit

NOTES	**Conditions for applying the fault finding procedure to a stored fault:** The fault is declared present after the engine is started or following a road test.
	Special notes: **If the fault is present:** – the **level 1** warning light is lit, – the **OBD** warning light will illuminate after three consecutive driving cycles (starting + 5 seconds + switch off the ignition and wait for the message to appear on the **diagnostic tool: "Loss of dialogue with the computer: EDC16 C3, check the tool connection and the computer supply"**), – the particle filter fault finding procedure is inhibited, – particle filter regeneration is inhibited.
	Priorities when dealing with a number of faults : **DF315 if it is present.** **DF308 Particle filter clogged if DF315 is stored and DF308 is present.** **DF011 Sensor feed voltage no. 1** if it is present or stored.

CC.1	***NOTES***	**None.**

Check the condition of the connectors on the differential pressure sensor and the injection computer.
If one of the connectors is faulty and there is a repair procedure (**see Technical Note 6015A, Electrical wiring repair, Wiring: precautions for repair**), repair the connector, otherwise replace the wiring.

Check the **insulation** of the following connections:

Injection computer connector **C track F3** → **track 2** particle filter differential pressure sensor connector

Injection computer connector **C track B2** → **track 3** particle filter differential pressure sensor connector

If any of the connections are faulty and there is a repair method (**see Technical Note 6015A, Electrical wiring repair, Wiring: precautions for repairs**), repair the wiring; otherwise replace the wiring.
If the fault is still present, replace the differential pressure sensor.

AFTER REPAIR	Deal with any faults. Carry out a road test followed by another check with the diagnostic tool.

GETtheMANUALS.org

DF315 **CONTINUED**	

CO.0 ***CO***	***NOTES***	**None**

Check the condition of the connectors on the differential pressure sensor and the injection computer.
If one of the connectors is faulty and there is a repair procedure (**see Technical Note 6015A, Electrical wiring repair, Wiring: precautions for repair**), repair the connector, otherwise replace the wiring.

Check the **continuity and insulation** from **earth** of the following connections:

Injection computer connector **C track F3** → **track 2** particle filter differential pressure sensor connector

Injection computer connector **B track B2** → **track 3** particle filter differential pressure sensor connector

If the connection or connections are faulty and there is a repair procedure (see **Technical Note 6015A, Electrical wiring repair, Wiring: Precautions for repair**), repair the wiring, otherwise replace it.

If the fault is still present, replace the differential pressure sensor.

1.DEF ***2.DEF***	***NOTES***	**None**

Check the condition of the pressure pipes on the differential pressure sensor.
Check that they are sealed and in the correct position.
Replace if necessary.

Check the **continuity and absence of interference resistance** of the following connections:

Injection computer connector **C track F3** → **track 2** particle filter differential pressure sensor connector

Injection computer connector **B track B2** → **track 3** particle filter differential pressure sensor connector

If the connection or connections are faulty and there is a repair procedure (see **Technical Note 6015A, Electrical wiring repair, Wiring: Precautions for repair**), repair the wiring, otherwise replace it.

If the fault is still present, replace the differential pressure sensor.

AFTER REPAIR	Deal with any faults. Carry out a road test followed by another check with the diagnostic tool.

GETtheMANUALS.org

DF619 PRESENT OR STORED	EGR VALVE JAMMED OPEN

NOTES	**Priorities when dealing with a number of faults:** **Deal with the following faults if they are present or stored:** **DF114 EGR solenoid valve circuit** **DF118 EGR solenoid valve servo-control** **DF209 EGR position sensor circuit** **DF272 EGR control circuit**
	Conditions for applying fault finding procedures to stored faults: The fault is declared present after: – A road test.
	Special notes: The EGR and turbocharging functions are inhibited. The **level 1** warning light is illuminated. Use bornier **Elé. 1681** for all operation at the level of the injection computer connectors.
	IMPORTANT This fault can result in a rapid and significant fouling of the particle filter. If the EGR valve needs to be replaced to resolve the fault, all faults must then be cleared.

Check the EGR valve connections.
Check the injection computer connections.
If the connector is faulty and there is a repair method (see **Technical Note 6015A, Repairing electrical wiring, Wiring: Precautions for repair**), repair the connector, otherwise replace the wiring.

AFTER REPAIR	Deal with any faults. Carry out a road test followed by another check with the diagnostic tool.

GETtheMANUALS.org

DF619 CONTINUED	

Check the continuity and insulation of the following connections:
- **3GC** between components **1460** and **120**,
- **3EL** between components **1460** and **120**,
- **3JM** between components **1460** and **120**.

Check the continuity and the insulation of each connection of the adapter attachment, if fitted to the vehicle.

If the connection or connections are faulty and there is a repair procedure (see **Technical Note 6015A, Electrical wiring repair, Wiring: Precautions for repair**), repair the wiring, otherwise replace it.

If the fault is still present, replace the EGR valve.
When replacing the EGR valve, run command **SC036 Reinitialise programming** and select **EGR valve** to reinitialise the EGR valve offsets. (see **Replacement of components**).

If the fault is still present, contact the Techline.

AFTER REPAIR	Deal with any faults. Carry out a road test followed by another check with the diagnostic tool.

GETtheMANUALS.org

DF620 PRESENT OR STORED	EGR VALVE FOULED

NOTES	**Priorities when dealing with a number of faults:** **Deal with the following faults if they are present or stored:** **DF114 EGR solenoid valve circuit** **DF118 EGR solenoid valve servo-control** **DF209 EGR position sensor circuit** **DF272 EGR control circuit**
	Conditions for applying fault finding procedures to stored faults: The fault is declared present after: – A road test.
	Special notes: The EGR and turbocharging functions are inhibited. The **level 1** warning light is illuminated. Use bornier **Elé. 1681** for all operation at the level of the injection computer connectors.
	IMPORTANT This fault can result in a rapid and significant fouling of the particle filter. If the EGR valve needs to be replaced to resolve the fault, all faults must then be cleared.

Check the EGR valve connections.
Check the injection computer connections.
If the connector is faulty and there is a repair method (see **Technical Note 6015A, Repairing electrical wiring, Wiring: Precautions for repair**), repair the connector, otherwise replace the wiring.

AFTER REPAIR	Deal with any faults. Carry out a road test followed by another check with the diagnostic tool.

GETtheMANUALS.org

DF620 CONTINUED	

Check the continuity and the insulation of the following connections:
- **3GC** between components **1460** and **120**,
- **3EL** between components **1460** and **120**,
- **3JM** between components **1460** and **120**.

Check the continuity and the insulation of each connection of the adapter attachment, if fitted to the vehicle.

If the connection or connections are faulty and there is a repair procedure (see **Technical Note 6015A, Electrical wiring repair, Wiring: Precautions for repair**), repair the wiring, otherwise replace it.

If the fault is still present, replace the EGR valve.
When replacing the EGR valve, run command **SC036 Reinitialise programming** and select **EGR valve** to reinitialise the EGR valve offsets. (see **Replacement of components**).

If the fault is still present, contact the Techline.

GETtheMANUALS.org

DF621 PRESENT OR STORED	EGR VALVE JAMMED OPEN (OBD FAULT)

NOTES	**Priorities when dealing with a number of faults:** **Deal with the following faults if they are present or stored:** **DF114 EGR solenoid valve circuit** **DF118 EGR solenoid valve servo-control** **DF209 EGR position sensor circuit** **DF272 EGR control circuit**
	Conditions for applying fault finding procedures to stored faults: The fault is declared present after: – A road test.
	Special notes: The EGR and turbocharging functions are inhibited. The **OBD** warning light illuminates after three complete driving cycles (starting + **5 seconds** + switch off the ignition and wait for the message to appear on the **diagnostic tool**: **"Loss of dialogue with the computer: EDC16 C3, check the tool connection and the computer supply"**). Use bornier **Elé. 1681** for all operation at the level of the injection computer connectors.
	IMPORTANT This fault can result in a rapid and significant fouling of the particle filter. If the EGR valve needs to be replaced to resolve the fault, all faults must then be cleared.

Check the EGR valve connections.
Check the injection computer connections.
If the connector is faulty and there is a repair method (see **Technical Note 6015A, Repairing electrical wiring, Wiring: Precautions for repair**), repair the connector, otherwise replace the wiring.

AFTER REPAIR	Deal with any faults. Carry out a road test followed by another check with the diagnostic tool.

GETtheMANUALS.org

DF621 CONTINUED	

Check the continuity and insulation of the following connections:
- **3GC** between components **1460** and **120**,
- **3EL** between components **1460** and **120**,
- **3JM** between components **1460** and **120**.

Check the continuity and the insulation of each connection of the adapter attachment, if fitted to the vehicle.

If the connection or connections are faulty and there is a repair procedure (see **Technical Note 6015A, Electrical wiring repair, Wiring: Precautions for repair**), repair the wiring, otherwise replace it.

If the fault is still present, replace the EGR valve.
When replacing the EGR valve, run command **SC036 Reinitialise programming** and select **EGR valve** to reinitialise the EGR valve offsets. (see **Replacement of components**).

If the fault is still present, contact the Techline.

AFTER REPAIR	Deal with any faults. Carry out a road test followed by another check with the diagnostic tool.

GETtheMANUALS.org

DF717 PRESENT OR STORED	PARTICLE FILTER UPSTREAM PRESSURE 1.DEF : Inconsistent signal

NOTES	**Conditions for applying fault finding procedures to stored faults:** The fault is declared present after the engine is started or following a road test.
	Special notes: **If the fault is present:** – the **level 1** warning light is lit, – the **OBD** warning light will illuminate after three consecutive driving cycles (starting + 5 seconds + switch off the ignition and wait for the message to appear on the **diagnostic tool: "Loss of dialogue with the computer: EDC16 C3, check the tool connection and the computer supply"**), – the particle filter fault finding procedure is inhibited, – particle filter regeneration is inhibited,

Check the condition of the pressure pipe between the particle filter upstream take-off point and the differential pressure sensor.

Check that the pipe is not crushed, blocked or pierced.

Check that the differential pressure sensor is correctly positioned and connected **(see MR395 or 402, Mechanical, 19B, Exhaust, Particle filter pressure sensor: Removal - Refitting)**.

Replace the pressure pipe if necessary.

AFTER REPAIR	Deal with any faults. Carry out a road test followed by another check with the diagnostic tool.

GETtheMANUALS.org

DF953 PRESENT OR STORED	PARTICLE FILTER ABSENT 1.DEF : Faulty 2.DEF : Signal outside lower limit

NOTES	**Conditions for applying the fault finding procedure to stored faults:** The fault is declared present after the engine is started or following a road test.
	Special notes: If the fault is present: – particle filter regeneration is inhibited, – blue/white smoke and black particles coming from the exhaust. – the **OBD** warning light illuminates after three consecutive driving cycles (start the engine **+ 5 seconds**, then switch off the ignition and wait for **40 seconds**).
	Priorities when dealing with a number of faults: Firstly, deal with the following faults: – **DF315 Particle filter differential pressure sensor** if it is present or stored, – **DF717 Particle filter upstream pressure** if present or stored
	IMPORTANT In the long term, this fault may lead to premature wear and a greater risk of turbocharger failure.

Check the condition of the connectors on the differential pressure sensor and the injection computer.
If one of the connectors is faulty and there is a repair procedure (**see Technical Note 6015A, Electrical wiring repair, Wiring: precautions for repair**), repair the connector, otherwise replace the wiring.

Check the particle filter is present.
If it is present,
Visually inspect the particle filter by placing the vehicle on a lift:
– not damaged (no abnormal welds, if necessary compare it with another vehicle fitted with particle filter),
– if it has After-Sales sleeves, as a result of a previous operation, check that the particle filter's contents have not been emptied when being removed.

If the particle filter is not working correctly or is absent:
– replace it.
– run command **SC036 Reinitialise programming** and select **After particle filter replacement** (see **Interpretation of commands**).

If the fault is still present, contact the Techline.

AFTER REPAIR	Deal with any faults. Carry out a road test followed by another check with the diagnostic tool.

GETtheMANUALS.org

NOTES	Only carry out this conformity check after a full check with the diagnostic tool. The values shown in this conformity check are given as a guide. Test conditions: **ENGINE OFF, IGNITION ON**.

MAIN COMPUTER STATUSES AND PARAMETERS

Order	Function	Parameter, Status Check or Action		Display and Notes	Fault finding
1	Vehicle impact	**ET077:**	Impact detected	**NO**	In the event of a fault, refer to the interpretation of fault **DF069 Impact detected signal**.
2	Power supply	**ET001:**	Computer + after ignition feed	**PRESENT**	In the event of a fault, refer to the interpretation of **DF015 Main relay control circuit**.
		PR071:	Computer supply voltage	**9 V < X < 16 V**	In the event of a fault, carry out a fault finding procedure on the charging circuit and refer to the interpretation for **DF047 Computer supply voltage**.
		PR358:	Sensor reference voltage	**3.4 V < X < 3.8 V**	None
3	Speed	**PR190:**	Idle speed setpoint	Indicates the engine's rotational speed setpoint in rpm	In the event of a fault, refer to the interpretation for fault **DF005 Engine speed sensor circuit**.
		PR055:	Engine speed	Indicates the engine's speed of rotation in rpm. **Ignition on: 0 rpm**	
4	Speed signal	**PR089:**	Vehicle speed	Indicates the vehicle speed in mph (km/h).This parameter is transmitted via the ABS computer. This signal is transmitted to the injection system on the multiplex network.	In the event of a fault test the multiplex network. See **38C** ABS note.

GETtheMANUALS.org

NOTES	Only carry out this conformity check after a full check with the diagnostic tool. The values shown in this conformity check are given as a guide. Test conditions: **ENGINE OFF, IGNITION ON**.

MAIN COMPUTER STATUSES AND PARAMETERS (continued)

Order	Function	Parameter, Status Check or Action	Display and Notes	Fault finding
5	Injection configuration	**ET104:** Injector code use	**YES**	This status indicates that the IMA function is activated. In the event of a fault, consult the interpretation of **DF276 Injector code programming**.
6	Pressure	**PR035:** Atmospheric pressure	Indicates the atmospheric pressure in mbar. The sensor is built into the computer. **Default value: 750 mbar.**	In the event of a fault, consult the interpretation of **DF003 Atmospheric pressure sensor circuit**.
		PR038: Rail pressure	**0 < X < 30 bar**	In the event of a fault, consult the interpretation of fault **DF007 Rail pressure sensor circuit**.
7	Temperature	**PR058:** Air temperature	Shows the inlet air temperature **Default value: 20°C**	In the event of a fault, refer to the interpretation for **DF039 Inlet air temperature circuit sensor**.
		PR064: Coolant temperature	Shows the engine coolant temperature in °C **Default value: 119°C.**	In the event of a fault, refer to the interpretation of **DF001 Coolant temperature sensor circuit**.
8	Torque	**PR015:** Engine torque	**N/A**	This parameter is only valid when the engine has been started

GETtheMANUALS.org

NOTES	Only carry out this conformity check after a full check with the diagnostic tool. The values shown in this conformity check are given as a guide. Test conditions: **ENGINE OFF, IGNITION ON**.

AIR CIRCULATION (TURBOCHARGING/INLET)

Order	Function	Parameter, Status Check or Action		Display and Notes	Fault finding
1	Engine running	**PR055:**	Engine speed	Indicates the engine's speed of rotation in rpm. **Ignition on:** **0 rpm**	In the event of a fault, refer to the interpretation for fault **DF005 Engine speed sensor circuit**.
2	Temperature	**PR058:**	Air temperature	Indicates the inlet air temperature **Default value: 20°C**	In the event of a fault, refer to the interpretation of fault **DF039 Inlet air temperature sensor circuit**
3	Turbocharging	**PR009:**	Turbocharging pressure setpoint	**790 < X < 1010 mbar**	None
		PR041:	Turbocharging pressure	**PR041 = PR035 ± 10 mbar**	In the event of a fault, consult the interpretation of **DF004 Turbocharging pressure sensor circuit**.
		PR209:	Turbocharging pressure loop difference	**X = PR009 - PR041 = ~ 0**	If **PR209** is significant, refer to the interpretation of the **AC004 Turbocharging solenoid valve** command.
		PR047:	Turbocharging pressure OCR	**X < 5%**	The opening cyclic ratio should be identical to the correction of the solenoid valve position
		PR011:	Turbocharging solenoid valve position sensor	**X < 5%**	

*OCR: Opening cycle ratio

GETtheMANUALS.org

NOTES	Only carry out this conformity check after a full check with the diagnostic tool. The values shown in this conformity check are given as a guide. Test conditions: **ENGINE OFF, IGNITION ON**.

AIR CIRCULATION (TURBOCHARGING/INLET) (continued 1)

Order	Function	Parameter, Status Check or Action		Display and Notes	Fault finding
4	Air circulation	**PR035:**	Atmospheric pressure	Indicates the atmospheric pressure in mbar. The sensor is built into the computer. **Default value: 750 mbar.**	In the event of a fault, consult the interpretation of **DF003 Atmospheric pressure sensor circuit**.
		PR132:	Air flow	**0 < X < 10 kg/h**	In the event of a fault, consult the interpretation of parameter **DF056 Air flow sensor circuit**.
		PR049:	Swirl flap OCR (except Vel Satis ph2 Vdiag 14)	**100%**	In the event of a fault, consult the interpretation of **DF227 Swirl flap**.
		PR013:	Swirl flap position correction (except Vel Satis ph2 Vdiag 14)	**X < 5%**	In the event of a fault, consult the interpretation for fault **DF226 Damper valve circuit**.
		PR672:	Damper valve position setpoint	**X < 5%**	
		PR417:	Damper valve OCR	**X < 5%**	
		PR420:	Damper valve error counter	**X = 0**	

GETtheMANUALS.org

NOTES	Only carry out this conformity check after a full check with the diagnostic tool. The values shown in this conformity check are given as a guide. Test conditions: **ENGINE OFF, IGNITION ON**.

AIR CIRCULATION (TURBOCHARGING/INLET) (continued 2)

Order	Function	Parameter, Status Check or Action	Display and Notes	Fault finding
5	Sensor feed	**PR083:** Air temperature sensor voltage	**1.90 < X < 3.10 V** **Default value: 5 V**	In the event of a fault, refer to the interpretation of fault **DF039 Inlet air temperature sensor circuit**
		PR079: Atmospheric pressure sensor voltage	**3.80 < X < 4 V**	In the event of a fault, consult the interpretation of **DF003 Atmospheric pressure sensor circuit**.
		PR073: Air flowmeter feed voltage	**0.5 V < X < 1 V** **Safe value: 0 V**	In the event of a fault, refer to the interpretation of fault **DF013 Sensor feed voltage no. 3**

GETtheMANUALS.org

NOTES	Only carry out this conformity check after a full check with the diagnostic tool. The values shown in this conformity check are given as a guide. Test conditions: **ENGINE OFF, IGNITION ON**.

FUEL CIRCUIT

Order	Function	Parameter, Status Check or Action		Display and Notes	Fault finding
1	Engine speed	**PR055:**	Engine speed	Shows the engine's speed of rotation RPM **Ignition on:** **0 rpm.**	In the event of a fault, refer to the interpretation for fault **DF005 Engine speed sensor circuit**.
2	Injector codes	**ET104:**	Injector code operation	**"YES"** Indicates whether the injector codes have been programmed	In the event of a fault, consult the interpretation of **DF276 Injector code programming**.
3	Temperature	**PR063:**	Fuel temperature	Indicates the fuel temperature **Default value: 100°C**	In the event of a fault, consult the interpretation of **DF098 Fuel temperature sensor circuit**.
4	Pressure	**PR008:**	Rail pressure setpoint	Indicates the theoretical pressure value for optimum engine operation **X = 250 ± 50 bar**	In the event of a fault, refer to the interpretation of fault **DF053 Rail pressure regulator function**.
		PR038:	Rail pressure	**X = 0 bar** **Default value:** **250 bar.**	In the event of a fault, consult the interpretation of fault **DF007 Rail pressure sensor circuit**.
		PR048:	Rail pressure regulation valve OCR	**X = 15%**	
		PR213:	Rail pressure loop difference	**X = PR008 - PR038**	The fuel pressure variation is the difference between the rail pressure and the rail pressure setpoint. In the event of a fault, consult the interpretation of fault **DF007 Rail pressure sensor circuit**.

GETtheMANUALS.org

NOTES	Only check conformity after a full check with the **diagnostic tool**. The values shown in this conformity check are given as a guide. Test conditions: **ENGINE OFF, IGNITION ON**.

FUEL CIRCUIT (continued)

Order	Function	Parameter, Status Check or Action		Display and Notes	Fault finding
5	Flow	**PR157:**	Fuel flow setpoint	**X = 0 < X < 60 mg/st**	None
		PR017:	Fuel flow	**PR017 = PR157**	None
		PR364:	Cylinder no. 1 fuel flow correction	**0.0 mg/st**	In the event of a fault, consult **TEST 10 Poor injector operation**.
		PR405:	Cylinder no. 2 fuel flow correction		
		PR406:	Cylinder no. 3 fuel flow correction		
		PR365:	Cylinder no. 4 fuel flow correction		
6	Rail current	**PR007:**	Rail pressure regulator current setpoint	**X = 400 ± 5 mA Default value: 1600 mA**	In the event of a fault, consult the interpretation of fault **DF007 Rail pressure sensor circuit**.
		PR006:	Rail pressure regulator current	**PR006 = PR007 ± 5 mA Default value: 1600 mA**	
7	Sensor voltage	**PR082:**	Fuel temperature sensor voltage	**1.8 < X < 4 V default value: 5 V**	In the event of a fault, consult the interpretation of faults **DF011 Sensor feed no. 1 voltage, DF012 Sensor feed no. 2 voltage and DF013 Sensor feed no. 3 voltage**.
		PR080:	Rail pressure sensor voltage	**0.5 V < X < 1 V Default value: 5 V**	

GETtheMANUALS.org

NOTES	Only carry out this conformity check after a full check with the diagnostic tool. The values shown in this conformity check are given as a guide. Test conditions: **ENGINE OFF, IGNITION ON**.

EMISSION CONTROL/OBD

Order	Function	Parameter, Status Check or Action		Display and Notes	Fault finding
1	Engine speed	**PR055:**	Engine speed	Indicates the engine's rotation speed in rpm	In the event of a fault, refer to the interpretation for fault **DF005 Engine speed sensor circuit**.
2	Exhaust gas recirculation	**ET651:**	EGR programming cu-off	**STATUS 16**	In the event of a fault, refer to the interpretation of **ET651 EGR programming cut-off**.
		PR005:	EGR valve opening setpoint	Gives a theoretical EGR valve opening value for optimum engine operation. **- 10 < X < 0%**	In the event of a fault, refer to fault interpretation **DF272 EGR control circuit**.
		PR051:	EGR valve position feedback	**- 10 < X < 0%**	In the event of a fault, refer to the interpretation of **DF118 EGR solenoid valve control**. The EGR valve position feedback loop difference must equal the difference between the EGR valve position and the position feedback.
		PR022:	EGR valve position feedback loop difference	**PR022 = PR005 - PR051**	
		PR128:	First EGR valve offset	**10% < X < 4% (average value)**	In the event of a fault, apply command **SC036 Reset programming and EGR valve**.
		PR129:	Last EGR valve offset	**10% < X < 4% (average value)**	
		PR587:	Cooling of recirculated exhaust gas	**INACTIVE if coolant temperature < 65°C**	In the event of a fault, consult the interpretation of fault **DF304 EGR by-pass circuit**.

GETtheMANUALS.org

NOTES	Only carry out this conformity check after a full check with the diagnostic tool. The values shown in this conformity check are given as a guide. Test conditions: **ENGINE OFF, IGNITION ON**.

EMISSION CONTROL/OBD (continued 1)

Order	Function	Parameter, Status Check or Action		Display and Notes	Fault finding
3	Air regulation	**PR171:**	Air flow setpoint for the EGR	**750 ± 200 mg/st**	In the event of a fault, consult the interpretation of parameter **DF056 Air flow sensor circuit**.
		PR132:	Air flow	**X = 0 kg/h**	
		PR146:	Inlet air flow	Shows the flow of air entering the engine in mg/st. **0 mg/st**	
		PR131:	EGR air flow variation	**PR131 = PR132 - PR171**	
		ET078:	Air regulation	**ACTIVE**	**If INACTIVE, switch off the ignition and wait 40 seconds before trying again.**
4	Sensor feed	**PR077:**	EGR valve position sensor voltage	**0.5 < X < 1.5 V** **default value: 0 V**	In the event of a fault, refer to the interpretation of fault **DF012 Sensor feed voltage no. 2**.
5	Coolant temperature	**PR064:**	Coolant temperature	Shows the engine coolant temperature in °C **Default value: 119°C.**	In the event of a fault, refer to the interpretation of **DF001 Coolant temperature sensor circuit**.

GETtheMANUALS.org

notes	Only carry out this conformity check after a complete check **with the diagnostic tool**. The values shown in this conformity check are given as a guide. Test conditions: **ENGINE OFF, IGNITION ON**.

PARTICLE FILTER SUB-FUNCTION

Function	Parameter, Status Check or Action		Display and Notes	Fault finding
Particle filter	**PR414:**	Particle filter differential pressure	**X = 0 ± 1 mbar**	In the event of a fault, consult the interpretation of **DF315 Particle filter differential pressure sensor**.
	PR385:	Exhaust pipe flow	When stationary **0 m^3/h**.	None
	PR383:	Weight of soot in the particle filter	**X < 45 g**	If the weight is greater than 45 g, consult the interpretation of **DF315 "Particle filter differential pressure sensor**.
	PR382:	Particle filter upstream temperature	**X ≈ 200°C**	In the event of a fault, consult the interpretation of **DF310 Particle filter upstream temperature sensor**.
	PR381:	Particle filter downstream temperature	**X ≈ 200°C**	In the event of a fault, consult the interpretation of **DF309 Particle filter downstream temperature sensor**.
	PR412:	Mileage at last successful regeneration	Value taken since the last dynamic regeneration (when driving)	If replacing the particle filter, run **SC036 Reinitialise programming**.
	PR415:	Time since last regeneration		
	PR391:	Mileage since particle filter replacement	Mileage counter since last particle filter replacement	
	PR1012:	Weight of soot after regeneration	Indicates the weight of soot remaining in the particle filter after running command **SC017 Particle filter regeneration**.	Consult the interpretation of **PR1012**.

GETtheMANUALS.org

NOTES	Only check conformity after a full check with the **diagnostic tool**. The values shown in this conformity check are given as a guide. Test conditions: **ENGINE OFF, IGNITION ON**.

PARTICLE FILTER HISTORY SUB-FUNCTION

Order	Function	Parameter, Status Check or Action		Display and Notes	Fault finding
1	Particle filter history	**PR784 to PR793:**	DF312 record No. 1 to DF312 record No. 10	Mileages of the last ten occurrences of **DF312 Speed request**	If **STOPPED**, refer to the interpretation of fault **DF312 Speed request**.
		PR794 to PR803:	Stored regeneration failure No. 1 to Stored regeneration failure No. 10	Mileage of the last ten regeneration failures	
		ET706 to ET715:	Stored engine status No. 1 to Stored engine status No. 10	This status indicates the stored engine status when there is a regeneration failure while driving: **NONE, + AFTER IGNITION FEED, RUNNING, STOPPED**.	
		PR816 to PR825:	Stored regeneration start No. 1 to Stored regeneration start No. 10	Distance of the last ten regeneration starts	Only interpret these parameters when interpreting **ALP 8 Particle filter warning light comes on too frequently**.
		ET742 to ET751:	Stored regeneration request status N°1 to Stored regeneration request status N°10	This status indicates the status of the regeneration request	Only interpret these statuses when interpreting **ALP 8 Particle filter warning light comes on too frequently**.

GETtheMANUALS.org

NOTES	Only carry out this conformity check after a full check with the diagnostic tool. The values shown in this conformity check are given as a guide. Test conditions: **ENGINE OFF, IGNITION ON**.

COLD LOOP

Order	Function	Parameter, Status Check or Action		Display and Notes	Fault finding
1	Engine	**PR055:**	Engine speed	Indicates the engine's rotation speed in rpm	In the event of a fault, refer to the interpretation for fault **DF005 Engine speed sensor circuit**.
2	Driver control	**ET088:**	Compressor actuation request	**INACTIVE**	If the air conditioning is authorised or the compressor is actuated (see **62A Air conditioning**).
		ET004:	Air conditioning authorisation	**NO**	
3	Air conditioning speed	**PR053:**	Speed requested by air conditioning	**N/A.**	This parameter is only valid when the engine has been started
4	Power	**PR125:**	Power consumed by the air conditioning compressor	**0 W**	None
5	Engine cooling	**ET143:**	Low-speed fan assembly relay control	With the ignition switched on < 80° **INACTIVE**	If the fan assemblies are supplied with the ignition on, the injection may be in defect mode. Carry out a system fault test and refer to the interpretation of any faults.
		ET144:	High-speed fan assembly relay control		
		ET014:	Check cooling fan 1	With the ignition switched on < 80° **STOPPED**	
		ET015:	Check fan assembly 2		

GETtheMANUALS.org

NOTES	Only carry out this conformity check after a full check with the diagnostic tool. The values shown in this conformity check are given as a guide. Test conditions: **ENGINE OFF, IGNITION ON**.

COLD LOOP (continued)

Order	Function	Parameter, Status Check or Action	Display and Notes	Fault finding
6	Coolant temperature	**PR064:** Coolant temperature	Shows the engine coolant temperature in °C **Default value: 119°C.**	In the event of a fault, refer to the interpretation of **DF001 Coolant temperature sensor circuit**.
7	Vehicle speed	**PR089:** Vehicle speed	Gives the vehicle speed in mph. This parameter is transmitted by the ABS computer. This signal is transmitted to the injection on the multiplex network.	In the event of a fault test the multiplex network. For the interpretation of possible faults (**see 38C, anti-lock braking system**).

GETtheMANUALS.org

NOTES	Only carry out this conformity check after a full check with the diagnostic tool. The values shown in this conformity check are given as a guide. Test conditions: **ENGINE OFF, IGNITION ON**.

DRIVER PARAMETERS

Order	Function	Parameter, Status Check or Action	Display and Notes	Fault finding
1	Engine	**PR055:** Engine speed	Indicates the engine's rotation speed in rpm	In the event of a fault, refer to the interpretation for fault **DF005 Engine speed sensor circuit**.
		PR190: Idle speed setpoint	Indicates the engine's rotational speed setpoint in rpm.	
2	Accelerator pedal position *	**PR030:** Accelerator pedal position	Indicates the accelerator pedal position. **If no pressure is being applied to the pedal PR030 = 0%**	In the event of a fault, refer to the interpretation of fault **DF008 Pedal potentiometer circuit gang 1** or **DF009 Pedal potentiometer circuit gang 2**.
3	Sensor feed	**PR147:** Pedal potentiometer voltage gang 1	Accelerator pedal released **0.75 < X < 0.80 V**	In the event of a fault, refer to the interpretation of fault **DF008 Pedal potentiometer voltage gang 1** or **DF009 Pedal potentiometer voltage gang 2**.
		PR148: Pedal potentiometer voltage gang 2	Accelerator pedal released **0.35 < X < 0.40 V**	

GETtheMANUALS.org

NOTES	Only carry out a conformity check after a **complete check** with the **diagnostic tool**. The values shown in this conformity check are given as a guide. Test conditions: **ENGINE OFF, IGNITION ON**.

DRIVER PARAMETERS (continued)

Order	Function	Parameter, Status Check or Action	Display and Notes	Fault finding
4	Brake contact	**ET704:** Brake switch no. 1	Indicates recognition of brake pedal contacts **INACTIVE**	In the event of a fault, consult the interpretation of status **ET704 Brake switch no. 1**.
		ET705: Brake switch no. 2		In the event of a fault, consult the interpretation of status **ET705 Brake switch no. 2**.
5	Clutch pedal	**ET233:** Clutch pedal	Indicates recognition of clutch pedal contacts **RELEASED**	In the event of a fault, consult the interpretation of status **ET233 Clutch pedal**.

(*) Pedal voltages - cold, ignition on (average values stated for information only).

Pedal load	0%	25%	50%	100%	120%
Voltage gang 1	**0.76 V**	**1.52 V**	**2.09 V**	**3.23 V**	**3.68 V**
Voltage gang 2	**0.37 V**	**0.74 V**	**1.02 V**	**1.56 V**	**1.79 V**

GETtheMANUALS.org

NOTES	Only carry out this conformity check after a full check with the diagnostic tool. The values shown in this conformity check are given as a guide. Test conditions: **ENGINE OFF, IGNITION ON**.

HEATING

Order	Function	Parameter, Status Check or Action		Display and Notes	Fault finding
1	Coolant temperature	**PR064:**	Coolant temperature	Shows the engine coolant temperature in °C Default value: 119°C.	In the event of a fault, refer to the interpretation of **DF001 Coolant temperature sensor circuit**.
		PR403:	Idle speed request by the thermoplungers	**Not applicable**	This parameter is only valid when the engine has been started
2	Thermoplungers	**ET205:**	Thermoplunger no. 1 relay control	**ACTIVE or INACTIVE** According to computer programming	In the event of a fault, consult the interpretation of **DF240 Thermoplunger no. 1 relay circuit**.
		ET206:	Thermoplunger no. 2 relay control		In the event of a fault, consult the interpretation of **DF239 Thermoplunger no. 2 relay circuit**.
		ET207:	Thermoplunger no. 3 relay control		In the event of a fault, consult the interpretation of **DF238 Thermoplunger no. 3 relay circuit**.
		PR401:	Thermoplungers power request	Indicates the power consumed by the thermoplungers in W	None

GETtheMANUALS.org

NOTES	Only carry out this conformity check after a full check with the diagnostic tool. The values shown in this conformity check are given as a guide. Test conditions: **ENGINE OFF, IGNITION ON**.

CRUISE CONTROL/SPEED LIMITER

Order	Function	Parameter, Status Check or Action	Display and Notes	Fault finding
1	Cruise control/ speed limiter	**PR089:** Vehicle speed	**Indicates the vehicle speed in mph (km/h). This parameter is transmitted by the ABS computer. This signal is transmitted to the injection on the multiplex network.**	In the event of a fault test the multiplex network. For the interpretation of possible faults (**see 38C, anti-lock braking system**).
		PR130: Cruise control setpoint	**Indicates the cruise control speed limit**	In the event of a fault, refer to the interpretation of statuses **ET042 Cruise control/Speed limiter, ET556 Driver deactivation of Cruise control/Speed limiter and ET557 Deactivation of Cruise control/Speed limiter by function**.
		ET042: Cruise control/ speed limiter	**INACTIVE:** When no button is pressed.	In the event of a fault, refer to the interpretation of status ET042.
			CRUISE CONTROL: cruise control ON/OFF button pressed	Lights the green warning light on the instrument panel.
			LIMITER: speed limiter ON/OFF button pressed	Lights the orange warning light on the instrument panel.

GETtheMANUALS.org

NOTES	Only carry out this conformity check after a full check with the diagnostic tool. The values shown in this conformity check are given as a guide. Test conditions: **ENGINE OFF, IGNITION ON**.

CRUISE CONTROL/SPEED LIMITER (continued 1)

Order	Function	Parameter, Status Check or Action	Display and Notes	Fault finding
1	Cruise control/ speed limiter (continued)	**ET413:** Cruise control/ speed limiter function	**INACTIVE:** When no button is pressed.	In the event of a fault, refer to the interpretation of statuses **ET042 Cruise control/Speed limiter, ET413 Cruise control/Speed limiter deactivation ET556 Cruise control/Speed limiter deactivation by driver and ET557 Cruise control/Speed limiter deactivation by function**.
			INCREASE: increase button pressed	
			DECREASE: decrease button pressed	
			CANCEL: "0" button pressed	
			REPEAT: R button pressed	
		ET556:	**STATUS 1:** Brake pedal depressed	The cruise control and speed limiter functions can be deactivated by various events. **IMPORTANT** Certain deactivations are stored; to reinitialise this status use **RZ007 Fault memory**. In the event of a fault, refer to the interpretation of statuses **ET042 Cruise control/Speed limiter, ET413 Cruise control/Speed limiter deactivation ET456 Cruise control/Speed limiter deactivation by driver and ET557 Cruise control/Speed limiter deactivation by function**.
			STATUS 2: traction control request	
			STATUS 3: suspend button pressed	
			STATUS 4: clutch pedal depressed	
			STATUS 5: gear lever in neutral	
			STATUS 6: inconsistency between the request and the vehicle speed	
		ET557:	**STATUS 1:** Cruise control or speed limiter fault	
			STATUS 2: fault detected by the injection computer	
			STATUS 3: vehicle speed invalid	

GETtheMANUALS.org

NOTES	Only carry out a conformity check after a **complete check** with the **diagnostic tool**. The values shown in this conformity check are given as a guide. Test conditions: **ENGINE OFF, IGNITION ON**.

CRUISE CONTROL/SPEED LIMITER (continued 2)

Order	Function	Parameter, Status Check or Action	Display and Notes	Fault finding
2	Brake switch	**ET704:** Brake switch no. 1 **ET705:** Brake switch no. 2	Brake pedal released **INACTIVE**	In the event of a fault, consult the interpretation of statuses **ET704 and ET705**.
3	Clutch switch	**ET233:** Clutch pedal	Brake pedal released **RELEASED**	In the event of a fault, consult the interpretation of **DF070 Clutch switch circuit**.

GETtheMANUALS.org

NOTES	Only carry out this conformity check after a full check with the diagnostic tool. The values shown in this conformity check are given as a guide. Test conditions: **ENGINE OFF, IGNITION ON**.

ENGINE COOLING

Order	Function	Parameter, Status Check or Action		Display and Notes	Fault finding
1	Coolant temperature	**PR064:**	Coolant temperature	Shows the engine coolant temperature in °C **Default value: 119°C.**	In the event of a fault, refer to the interpretation of **DF001 Coolant temperature sensor circuit**.
2	Fan assemblies	**ET143:**	Low-speed fan assembly relay control	With the ignition switched on, engine < 80° **INACTIVE**	If the fan assemblies are supplied with the ignition on, the injection system may be in defect mode. Carry out a system fault test and refer to the interpretation of faults.
		ET144:	Low-speed fan assembly relay control		
		ET014:	Check fan assembly 1	With the ignition switched on, engine < 80° **STOPPED**	
		ET015:	Check fan assembly 2		
3	Sensor feed	**PR084:**	Coolant temperature sensor voltage	**3 < X < 4 V** **Default value: 5 V**	In the event of a fault, refer to the interpretation of **DF001 Coolant temperature sensor circuit**.

GETtheMANUALS.org

NOTES	Only carry out this conformity check after a full check with the diagnostic tool. The values shown in this conformity check are given as a guide. Test conditions: **ENGINE OFF, IGNITION ON**.

IGNITION/PREHEATING

Order	Function	Parameter, Status Check or Action		Display and Notes	Fault finding
1	Power supply	**ET001:**	Computer + after ignition feed	**PRESENT**	In the event of a fault, carry out a fault finding procedure on the charge circuit.
2	Engine	**ET038:**	Engine	**STOPPED**	None
		PR055:	Engine speed	Indicates the engine's rotation speed in rpm	In the event of a fault, refer to the interpretation for fault **DF005 Engine speed sensor circuit**.
3	Temperature	**PR058:**	Air temperature	Indicates the inlet air temperature in °C **Default value: 20°C**	In the event of a fault, refer to the interpretation of fault **DF039 Inlet air temperature sensor circuit**
		PR064:	Coolant temperature	Shows the engine coolant temperature in °C **Default value: 119°C.**	In the event of a fault, refer to the interpretation of **DF001 Coolant temperature sensor circuit**.
4	Preheating	**ET007:**	Pre-postheating unit control	**Status ET007 is ACTIVE a few seconds after the ignition is switched on and for the postheating**	In the event of a fault, (ET007 locked in ACTIVE), refer to the interpretation of fault **DF017 Preheating unit control circuit**.
5	Power supply	**PR071:**	Computer supply voltage	**9 V < voltage < 16 V**	In the event of a fault, consult the interpretation of fault **DF047 computer supply voltage**.

GETtheMANUALS.org

NOTES	Only carry out this conformity check after a full check with the diagnostic tool. The values shown in this conformity check are given as a guide. Test conditions: **ENGINE OFF, IGNITION ON**.

STARTING

Order	Function	Parameter, Status Check or Action		Display and Notes	Fault finding
1	Power supply	**ET001:**	Computer + after ignition feed	**PRESENT**	In the event of a fault, carry out a fault finding procedure on the charge circuit.
2	Starting	**ET238:**	Synchronisation	**NOT PERFORMED**	In the event of a fault, refer to fault interpretation **DF195 Camshaft/engine speed sensor consistency**.
		ET076:	Starting	**AUTHORISED**	If status **ET076 is PROHIBITED**, carry out a complete fault finding procedure on the multiplex network.
3	Engine operation.	**ET038:**	Engine	**STOPPED**	None
4	Power supply	**PR071:**	Computer supply voltage	**9 V < voltage < 16 V**	In the event of a fault, consult the interpretation of fault **DF047 Computer supply voltage**.
		PR358:	Sensor reference voltage	**3.4 V < voltage < 3.8 V**	None

GETtheMANUALS.org

NOTES	Only carry out this conformity check after a full check with the diagnostic tool. The values shown in this conformity check are given as a guide. Test conditions: **ENGINE OFF, IGNITION ON**.

PROTECTION

Order	Function	Parameter, Status Check or Action		Display and Notes	Fault finding
1	Engine immobiliser	**ET341:**	Immobiliser code programmed	**YES**	If status ET341 is locked on NO (**see 87B, Connection unit**).
		ET003:	Engine immobiliser	**INACTIVE**	If status ET003 is locked on ACTIVE (see **87B, Connection unit**).
2	Vehicle impact	**ET077:**	Impact detected	**NO**	In the event of a fault, refer to the interpretation of fault **DF069 Impact detected signal**.
3	Starting	**ET076:**	Starting	**AUTHORISED: injection authorises starting**	If status ET076 is PROHIBITED (see **87B, Connection unit**).

GETtheMANUALS.org

NOTES	Only carry out this conformity check after a full check with the diagnostic tool. The values shown in this conformity check are given as a guide. Test conditions: **Engine at idle speed, coolant temperature > 80°**.

MAIN COMPUTER STATUSES AND PARAMETERS

Order	Function	Parameter, Status Check or Action		Display and Notes	Fault finding
1	Vehicle impact	**ET077:**	Impact detected	**NO**	In the event of a fault, refer to the interpretation of fault **DF069 Impact detected signal**.
2	Power supply	**ET001:**	Computer + after ignition feed	**PRESENT**	In the event of a fault, refer to the interpretation of **DF015 Main relay control circuit**.
		PR071:	Computer supply voltage	**9 V < X < 16 V**	In the event of a fault, carry out a fault finding procedure on the charging circuit and refer to the interpretation for **DF047 Computer supply voltage**.
		PR358:	Sensor reference voltage	**3.4 V < X <3.8 V**	None
3	Speed	**PR190:**	Engine idle speed setpoint.	Indicates the engine's rotational speed setpoint in rpm.	In the event of a fault, refer to the interpretation for fault **DF005 Engine speed sensor circuit**.
		PR055:	Engine speed	Indicates the engine's speed of rotation in rpm. **800 rpm**	
4	Injection configuration	**ET104:**	Injector code use	**YES**	This status indicates that the IMA function is activated. In the event of a fault, consult the interpretation of **DF276 Injector code programming**.

GETtheMANUALS.org

NOTES	Only carry out this conformity check after a full check with the diagnostic tool. The values shown in this conformity check are given as a guide. Test conditions: **Engine at idle speed, coolant temperature > 80°**.

MAIN COMPUTER STATUSES AND PARAMETERS (continued)

Order	Function	Parameter, Status Check or Action	Display and Notes	Fault finding
5	Pressure	**PR035:** Atmospheric pressure	Indicates the atmospheric pressure in mbar. The sensor is built into the computer. **Default value: 750 mbar.**	In the event of a fault, consult the interpretation of **DF003 Atmospheric pressure sensor circuit**.
		PR038: Rail pressure	**250 < X < 350 bar**	In the event of a fault, consult the interpretation of fault **DF007 Rail pressure sensor circuit**.
6	Temperature	**PR058:** Air temperature	Shows the inlet air temperature **Default value: 20°C**	In the event of a fault, refer to the interpretation for **DF039 Inlet air temperature circuit sensor**
		PR064: Coolant temperature	Shows the engine coolant temperature in °C **Default value: 119°C.**	In the event of a fault, refer to the interpretation of **DF001 Coolant temperature sensor circuit**.
7	Torque	**PR015:** Engine torque	**N/A.**	This parameter is only valid when the engine has been started
8	Speed signal	**PR089:** Vehicle speed	Indicates the vehicle speed in mph (km/h). This parameter is transmitted by the ABS computer. This signal is transmitted to the injection on the multiplex network.	In the event of a fault, carry out a multiplex network test, see **38C**, ABS note.

GETtheMANUALS.org

NOTES	Only carry out this conformity check after a full check with the diagnostic tool. The values shown in this conformity check are given as a guide. Test conditions: **Engine at idle speed, coolant temperature > 80°**.

AIR CIRCULATION (TURBOCHARGING/INLET)

Order	Function	Parameter, Status Check or Action		Display and Notes	Fault finding
1	Engine running	**PR055:**	Engine speed	Indicates the engine's speed of rotation in rpm.	In the event of a fault, refer to the interpretation for fault **DF005 Engine speed sensor circuit**.
2	Temperature	**PR058:**	Air temperature	Indicates the inlet air temperature **Default value: 20°C**	In the event of a fault, refer to the interpretation of fault **DF039 Inlet air temperature sensor circuit**
3	Turbocharging	**PR041:**	Turbocharging pressure	**PR041 = PR035 ± 10 mbar**	In the event of a fault, consult the interpretation of **DF004 Turbocharging pressure sensor circuit**.
		PR009:	Turbocharging pressure setpoint	**790 < X < 1010 mbar**	None
		PR209:	Turbocharging pressure loop difference	**X = PR009 - PR041 = ~ 0**	If **PR209** is significant, refer to the interpretation of the **AC004 Turbocharging solenoid valve** command.
		PR047:	Turbocharging pressure OCR*	**60 < X < 90%**	
		PR011:	Turbocharging solenoid valve position sensor	**60 < X < 90%**	The opening cyclic ratio should be identical to the correction of the solenoid valve position

*OCR: Opening cycle ratio

GETtheMANUALS.org

NOTES	Only carry out this conformity check after a full check with the diagnostic tool. The values shown in this conformity check are given as a guide. Test conditions: **Engine at idle speed, coolant temperature > 80°**.

AIR CIRCULATION (TURBOCHARGING/INLET) (continued 1)

Order	Function	Parameter, Status Check or Action		Display and Notes	Fault finding
4	Air circulation	**PR035:**	Atmospheric pressure	Indicates the atmospheric pressure in mbar. The sensor is built into the computer. **Default value: 750 mbar.**	In the event of a fault, consult the interpretation of **DF003 Atmospheric pressure sensor circuit**.
		PR132:	Air flow	**25 < X < 50 kg/h**	In the event of a fault, consult the interpretation of parameter **DF056 Air flow sensor circuit**.
		PR049:	Swirl flap OCR (Except Vel Satis ph2 Vdiag 14)	**100%**	In the event of a fault, consult the interpretation of **DF227 Swirl flap**.
5	Air circulation	**PR013:**	Swirl flap position correction (Except Vel Satis ph2 Vdiag 14)	**X < 5%**	In the event of a fault, consult the interpretation of fault **DF227 Swirl flap**.
		PR672:	Damper valve position setpoint	**X < 5%**	In the event of a fault, consult the interpretation for fault **DF226 Damper valve circuit**.
		PR417:	Damper valve OCR	**X < 5%**	
		PR420:	Damper valve error counter	**X = 0**	

GETtheMANUALS.org

NOTES	Only carry out this conformity check after a full check with the diagnostic tool. The values shown in this conformity check are given as a guide. Test conditions: **Engine at idle speed, coolant temperature > 80°**.

AIR CIRCULATION (TURBOCHARGING/INLET) (continued 2)

Order	Function	Parameter, Status Check or Action	Display and Notes	Fault finding
6	Sensor feed	**PR083:** Air temperature sensor voltage	**1.90 < X < 3.10 V** **Default value: 5 V**	In the event of a fault, refer to the interpretation of fault **DF039 Inlet air temperature sensor circuit**
		PR079: Atmospheric pressure sensor voltage	**3.80 < X < 4 V**	In the event of a fault, consult the interpretation of **DF003 Atmospheric pressure sensor circuit**.
		PR073: Air flowmeter feed voltage	**1.5 < X < 2.5 V** **Safe value: 0 V**	In the event of a fault, refer to the interpretation of fault **DF013 Sensor feed voltage no. 3**

GETtheMANUALS.org

NOTES	Only carry out this conformity check after a full check with the diagnostic tool. The values shown in this conformity check are given as a guide. Test conditions: **Engine at idle speed, coolant temperature > 80°**.

FUEL CIRCUIT

Order	Function	Parameter, Status Check or Action		Display and Notes	Fault finding
1	Engine speed	**PR055:**	Engine speed	Indicates the engine's speed of rotation in rpm. **Ignition on:** **0 rpm.**	In the event of a fault, refer to the interpretation for fault **DF005 Engine speed sensor circuit**.
2	Injector codes	**ET104:**	Injector code operation	**"YES"** Indicates whether the injector codes have been programmed	In the event of a fault, consult the interpretation of **DF276 Injector code programming**.
3	Temperature	**PR063:**	Fuel temperature	Indicates the fuel temperature **Default value: 100°C**	In the event of a fault, consult the interpretation of **DF098 Fuel temperature sensor circuit**.
4	Pressure	**PR008:**	Rail pressure setpoint	Indicates the theoretical pressure value for optimum engine operation **X = 250 ± 50 bar**	In the event of a fault, refer to the interpretation of fault **DF053 Rail pressure regulator function**.
		PR038:	Rail pressure	**X = ~ 300 bar** **Default value: 250 bar.**	In the event of a fault, consult the interpretation of fault **DF007 Rail pressure sensor circuit**.
		PR048:	OCR* rail pressure regulation valve	**35 < X < 45%**	
		PR213:	Rail pressure loop difference	**X = PR008 - PR038**	The fuel pressure variation is the difference between the rail pressure and the rail pressure setpoint. In the event of a fault, consult the interpretation of fault **DF007 Rail pressure sensor circuit**.

*OCR: Opening cycle ratio

GETtheMANUALS.org

NOTES	Only carry out this conformity check after a full check with the diagnostic tool. The values shown in this conformity check are given as a guide. Test conditions: **Engine at idle speed, coolant temperature > 80°**.

FUEL CIRCUIT (continued)

Order	Function	Parameter, Status Check or Action		Display and Notes	Fault finding
5	Flow	**PR157:**	Fuel flow setpoint	**X = 0 < X < 60 mg/st**	None
		PR017:	Fuel flow	**PR017 = PR157**	None
		PR364:	Cylinder no. 1 fuel flow correction	**± 1 mg/st**	In the event of a fault, consult **TEST 10 POOR INJECTOR OPERATION**.
		PR405:	Cylinder no. 2 fuel flow correction		
		PR406:	Cylinder no. 3 fuel flow correction		
		PR365:	Cylinder no. 4 fuel flow correction		
6	Rail current	**PR007:**	Rail pressure regulator current setpoint	**X = 1400 ± 50 mA Default value: 1600 mA**	In the event of a fault, consult the interpretation of fault **DF007 Rail pressure sensor circuit**.
		PR006:	Rail pressure regulator current	**PR006 = PR007 ± 5 mA Default value: 1600 mA**	
7	Sensor voltage	**PR082:**	Fuel temperature sensor voltage	**1.8 < X < 4 V default value: 5 V**	In the event of a fault, consult the interpretation of faults **DF011 Sensor feed no. 1 voltage, DF012 Sensor feed no. 2 voltage and DF013 Sensor feed no. 3 voltage**.
		PR080:	Rail pressure sensor voltage	**1 < X < 1.5 V Default value: 5 V**	

GETtheMANUALS.org

NOTES	Only carry out this conformity check after a full check with the diagnostic tool. The values shown in this conformity check are given as a guide. Test conditions: **Engine at idle speed, coolant temperature > 80°**.

EMISSION CONTROL/OBD

Order	Function	Parameter, Status Check or Action		Display and Notes	Fault finding
1	Engine speed	**PR055:**	Engine speed	Indicates the engine's rotation speed in rpm	In the event of a fault, refer to the interpretation for fault **DF005 Engine speed sensor circuit**.
2	Exhaust gas recirculation	**ET651:**	EGR programming cut-off	**NONE**	In the event of a fault, refer to the interpretation of **ET651 EGR programming cut-off**.
		PR005:	EGR valve opening setpoint	Gives a theoretical EGR valve opening value for optimum engine operation. **20 < X < 40%**	In the event of a fault, refer to fault interpretation **DF272 EGR control circuit**.
		PR051:	EGR valve position feedback	**20 < X < 40%**	In the event of a fault, refer to the interpretation of **DF118 EGR solenoid valve control**. The EGR valve position feedback loop difference must equal the difference between the EGR valve position and the position feedback.
		PR022:	EGR valve position feedback loop difference	**PR022 = PR005 - PR051** **must be close to 0 at idle speed**	
		PR128:	First EGR valve offset	**10% < X < 40%** **(average value)**	In the event of a fault, apply command **SC036 Reset programming and EGR valve**.
		PR129:	Last EGR valve offset	**10% < X < 40%** **(average value)**	
		ET587:	Cooling of recirculated exhaust gas	**ACTIVE** **if coolant temperature > 65°C**	In the event of a fault, consult the interpretation of fault **DF304 EGR by-pass circuit**.

GETtheMANUALS.org

NOTES	Only carry out this conformity check after a full check with the diagnostic tool. The values shown in this conformity check are given as a guide. Test conditions: **Engine at idle speed, coolant temperature > 80°**.

EMISSION CONTROL/OBD (continued 1)

Order	Function	Parameter, Status Check or Action		Display and Notes	Fault finding
3	Air regulation	**PR171:**	Air flow setpoint for the EGR	**750 ± 200 mg/st**	In the event of a fault, consult the interpretation of parameter **DF056 Air flow sensor circuit**.
		PR132:	Air flow	**Approximately 250 mg/stroke** engine warm at idle speed	
		PR146:	Inlet air flow	Indicates the flow of air entering the engine in mg/st. **0 mg/st**	
		PR131:	EGR air flow variation	**X = PR146 - PR171 should be close to 0 with ignition on**	
		ET078:	Air regulation	**ACTIVE**	**If INACTIVE, switch off the ignition and wait 1 minute before trying again.**
4	Sensor feed	**PR077:**	EGR valve position sensor voltage	**1.5 < X < 2.5 V default value: 0 V**	In the event of a fault, refer to the interpretation of fault **DF012 Sensor feed voltage no. 2**.
5	Coolant temperature	**PR064:**	Coolant temperature	Shows the engine coolant temperature in °C **Default value: 119°C.**	In the event of a fault, refer to the interpretation of **DF001 Coolant temperature sensor circuit**.

GETtheMANUALS.org

NOTES	Only check conformity after a full check with the **diagnostic tool**. The values shown in this conformity check are given as a guide. Test conditions: **ENGINE WARM AT IDLE SPEED, COOLANT TEMPERATURE > 80°C, NO ELECTRICAL CONSUMERS RUNNING**.

PARTICLE FILTER SUB-FUNCTION

Function	Parameter, Status Check or Action		Display and Notes	Fault finding
Particle filter	**PR414:**	Particle filter particle filter	**10 < X < 100 mbar**	In the event of a fault, consult the interpretation of **DF315 Particle filter differential pressure sensor**.
	PR385:	Exhaust pipe flow	Exhaust gas flow in m^3/h. **20 < X < 80 m^3/h**	None
	PR383:	Weight of soot in the particle filter	**X < 45 g**	If the weight is greater than 45 g, consult the interpretation of **DF315 Particle filter differential pressure sensor**.
	PR382:	Particle filter upstream temperature	**X ≈ 200°C**	In the event of a fault, consult the interpretation of **DF310 Particle filter upstream temperature sensor**.
	PR381:	Particle filter downstream temperature	**X ≈ 200°C**	In the event of a fault, consult the interpretation of **DF309 Particle filter downstream temperature sensor**.
	PR412:	Mileage at last successful regeneration	Value taken since the last dynamic regeneration (when driving)	If replacing the particle filter, run **SC036 Reinitialise programming**.
	PR415:	Time since last regeneration		
	PR391:	Mileage since particle filter replacement	Mileage counter since last particle filter replacement	
	PR1012:	Weight of soot after regeneration	Indicates the weight of soot remaining in the particle filter after running command **SC017 Particle filter regeneration**	Consult the interpretation of **PR1012**.

GETtheMANUALS.org

NOTES	Only check conformity after a full check with the **diagnostic tool**. The values shown in this conformity check are given as a guide. Test conditions: **ENGINE WARM AT IDLE SPEED, COOLANT TEMPERATURE > 80°C, NO ELECTRICAL CONSUMERS RUNNING**.

PARTICLE FILTER HISTORY SUB-FUNCTION

Order	Function	Parameter, Status Check or Action		Display and Notes	Fault finding
1	Particle filter history	**PR784 to PR793:**	DF312 request No. 1 to DF312 request No. 10	Mileages of the last ten occurrences of **DF312 Speed request**	If **STOPPED**, refer to the interpretation of fault **DF312 Speed request**.
		PR794 to PR803:	Stored regeneration failure No. 1 to Stored regeneration failure No. 10	Mileage of the last ten regeneration failures	
		ET706 to ET715:	Stored engine status No. 1 to Stored engine status No. 10	This status indicates the stored engine status when there is a regeneration failure while driving: **NONE, + AFTER IGNITION FEED, RUNNING, STOPPED**.	
		PR816 to PR825:	Stored regeneration start No. 1 to Stored regeneration start No. 10	Distance of the last ten regeneration starts	Only interpret these parameters when interpreting **ALP 8 Particle filter warning light comes on too frequently**.
		ET742 to ET751:	Stored regeneration request status N°1 to Stored regeneration request status N°10	This status indicates the status of the regeneration request	Only interpret these statuses when interpreting **ALP 8 Particle filter warning light comes on too frequently**.

GETtheMANUALS.org

NOTES	Only check conformity after a complete check using the diagnostic tool. The values shown in this conformity check are given as a guide. Test conditions: **Engine at idle speed, coolant temperature > 80°**.

COLD LOOP

Order	Function	Parameter, Status checked or Action		Display and Notes	Fault finding
8	Engine	**PR055:**	Engine speed	Gives the engine speed of rotation in rpm	In the event of a fault, refer to the interpretation for fault **DF005 Engine speed sensor circuit**.
9	Driver control	**ET088:**	Compressor actuation request	**ACTIVE if air conditioning request**	If the air conditioning is authorised or the compressor is actuated (see **62A Air conditioning**).
		ET004:	Air conditioning authorisation	**YES if air conditioning request**	
10	Air conditioning speed	**PR053:**	Speed requested by air conditioning	**875 rpm depending on computer programming**	This parameter is only valid when the engine has been started
11	Output	**PR125:**	Power absorbed by the air conditioning compressor	Indicates the power absorbed by the air conditioning compressor	This parameter is only valid when the engine has been started
12	Engine cooling	**ET143:**	Low speed fan assembly relay control	**ACTIVE if air conditioning request**	If the fan assemblies are supplied with ignition on, the injection system may be in defect mode. Carry out a system fault test and refer to the interpretation of any faults.
		ET144:	High speed fan assembly relay control	**INACTIVE**	
		ET014:	Check cooling fan 1	**RUNNING if air conditioning requested**	
		ET015:	Monitor cooling fan 2	**STOPPED**	

GETtheMANUALS.org

NOTES	Only check conformity after a complete check using the diagnostic tool. The values shown in this conformity check are given as a guide. Test conditions: **Engine at idle speed, coolant temperature > 80°**.

COLD LOOP (continued)

Order	Function	Parameter, Status checked or Action	Display and Notes	Fault finding
13	Coolant temperature	**PR064:** Coolant temperature	Shows the engine coolant temperature in °C **Default value: 119 °C**	In the event of a fault, refer to the interpretation of **DF001 Coolant temperature sensor circuit**.
14	Vehicle speed	**PR089:** Vehicle speed	Gives the vehicle speed in mph. This parameter is transmitted by the ABS computer. This signal is transmitted to the injection on the multiplex network.	In the event of a fault, test the multiplex network. For the interpretation of possible faults (**see 38C, anti-lock braking system**).

GETtheMANUALS.org

NOTES	Only check conformity after a complete check using the diagnostic tool. The values shown in this conformity check are given as a guide. Test conditions: **Engine at idle speed, coolant temperature > 80°**.

DRIVER PARAMETERS

Order	Function	Parameter, Status checked or Action		Display and Notes	Fault finding
1	Engine	**PR055:**	Engine speed	Gives the engine speed of rotation in rpm	In the event of a fault, refer to the interpretation for fault **DF005 Engine speed sensor circuit**.
		PR190:	Idle speed setpoint	**Indicates the engine's rotational speed setpoint**	
2	Accelerator pedal position *	**PR030:**	Accelerator pedal position	Indicates the accelerator pedal position. **If no pressure is being applied to the pedal PR030 = 0 %**	In the event of a fault, refer to the interpretation of fault **DF008 Pedal potentiometer circuit gang 1** or **DF009 Pedal potentiometer circuit gang 2**.
3	Sensor feed	**PR147:**	Pedal potentiometer voltage gang 1	Accelerator pedal released **0.70 < X < 0.80 V**	In the event of a fault, refer to the interpretation of fault **DF008 Pedal potentiometer voltage gang 1** or **DF009 Pedal potentiometer voltage gang 2**.
		PR148:	Pedal potentiometer voltage gang 2	Accelerator pedal released **0.35 < X < 0.40 V**	

GETtheMANUALS.org

NOTES	Only check the conformity after a **complete check** with the **diagnostic tool**. The values shown in this conformity check are given as a guide. Test conditions: **Engine at idle speed, coolant temperature > 80°**.

DRIVER PARAMETERS (continued)

Order	Function	Parameter, Status checked or Action	Display and Notes	Fault finding
4	Brake contact	**ET704:** Brake contact no. 1	Indicates recognition of brake pedal contacts **INACTIVE**	In the event of a fault, consult the interpretation of status **ET704 Brake switch no. 1**.
		ET705: Brake switch no. 2		In the event of a fault, consult the interpretation for status **ET705 Brake switch no. 2**
5	Clutch pedal	**ET233:** Clutch pedal	Indicates recognition of clutch pedal contacts **RELEASED**	In the event of a fault, consult the interpretation of status **ET233 Clutch pedal**.

(*) Pedal voltages - cold, ignition on (average values stated for information only).

Pedal load	**0 %**	**25 %**	**50 %**	**100 %**	**120 %**
Gang 1 voltage	**0.76 V**	**1.52 V**	**2.09 V**	**3.23 V**	**3.68 V**
Gang 2 voltage	**0.37 V**	**0.74 V**	**1.02 V**	**1.56 V**	**1.79 V**

GETtheMANUALS.org

NOTES	Only check conformity after a complete check using the diagnostic tool. The values shown in this conformity check are given as a guide. Test conditions: **Engine at idle speed, coolant temperature > 80°**.

HEATING

Order	Function	Parameter, Status checked or Action		Display and Notes	Fault finding
1	Coolant temperature	**PR064:**	Coolant temperature	Shows the engine coolant temperature in °C **Safe value: 119 °C**	In the event of a fault, refer to the interpretation of **DF001 Coolant temperature sensor circuit**.
		PR403:	Idle speed request by the heating elements	**875 rpm** if one of the three heating elements is ACTIVE	None
2	Heating elements	**ET205:**	Heating element no. 1 relay control	**ACTIVE or INACTIVE** According to computer programming	In the event of a fault, consult the interpretation of **DF240 Heating element no. 1 relay circuit**.
		ET206:	Heating element no. 2 relay control		In the event of a fault, consult the interpretation of **DF239 Heating element no. 2 relay circuit**.
		ET207:	Heating element no. 3 relay control		In the event of a fault, consult the interpretation of **DF238 Heating element no. 3 relay circuit**.
		PR401:	Heating elements power request	Indicates the power consumed by the heating elements in W	None

GETtheMANUALS.org

NOTES	Only check conformity after a complete check using the diagnostic tool. The values shown in this conformity check are given as a guide. Test conditions: **Engine at idle speed, coolant temperature > 80°**.

CRUISE CONTROL/SPEED LIMITER

Order	Function	Parameter, Status checked or Action	Display and Notes	Fault finding
1	Cruise control/ speed limiter	**PR089:** Vehicle speed	**Indicates the vehicle speed in mph (km/h). This parameter is transmitted by the ABS computer. This signal is transmitted to the injection on the multiplex network.**	In the event of a fault, test the multiplex network. For the interpretation of possible faults (**see 38C, anti-lock braking system**).
		PR130: Cruise control setpoint	**Indicates the cruise control speed limit**	In the event of a fault, refer to the interpretation of statuses **ET042 Cruise control/Speed limiter, ET556 Cruise control/ Speed limiter deactivation by driver and ET557 Cruise control/Speed limiter deactivation by function**.
		ET042: Cruise control/ speed limiter	**INACTIVE:** When no button is pressed.	In the event of a fault, refer to the interpretation of status **ET042**.
			CRUISE CONTROL: cruise control ON/OFF button pressed	Lights the green warning light on the instrument panel.
			LIMITER: speed limiter ON/OFF button pressed	Lights the orange warning light on the instrument panel.

GETtheMANUALS.org

NOTES	Only check conformity after a complete check using the diagnostic tool. The values shown in this conformity check are given as a guide. Test conditions: **Engine at idle speed, coolant temperature > 80°**.

CRUISE CONTROL/SPEED LIMITER (continued 1)

Order	Function	Parameter, Status checked or Action		Display and Notes	Fault finding
1	Cruise control/ speed limiter (continued)	**ET413:**	Cruise control/ speed limiter function	**INACTIVE:** When no button is pressed.	In the event of a fault, refer to the interpretation of statuses **ET042 Cruise control/Speed limiter, ET413 Cruise control/Speed limiter deactivation ET556 Cruise control/Speed limiter deactivation by driver and ET557 Cruise control/Speed limiter deactivation by function**.
				INCREASE: increase button pressed	
				DECREASE: decrease button pressed	
				CANCEL: "0" button pressed	
				REPEAT: R button pressed	
		ET556:	Driver deactivation of the cruise control/speed limiter Note: the cruise control can only be activated at a speed of V > 18 mph (30 km/h)	**STATUS 1:** Brake pedal depressed	The cruise control and speed limiter functions can be deactivated by various events. **IMPORTANT** Certain deactivations are stored; to reinitialise this status use **RZ007 Fault memory** In the event of a fault, refer to the interpretation of statuses **ET042 Cruise control/Speed limiter, ET413 Cruise control/Speed limiter deactivation ET556 Cruise control/Speed limiter deactivation by driver and ET557 Cruise control/Speed limiter deactivation by function**.
				STATUS 2: traction control request	
				STATUS 3: suspend button pressed	
				STATUS 4: clutch pedal depressed	
				STATUS 5: gear lever in neutral	
				STATUS 6: inconsistency between the request and the vehicle speed	
		ET557:	Deactivation by cruise control/ speed limiter function Note: the cruise control can only be activated at a speed of V > 18 mph (30 km/h)	**STATUS 1:** Cruise control or speed limiter fault	
				STATUS 2: fault detected by the injection computer	
				STATUS 3: vehicle speed invalid	

GETtheMANUALS.org

NOTES	Only check conformity after a complete check using the diagnostic tool. The values shown in this conformity check are given as a guide. Test conditions: **Engine at idle speed, coolant temperature > 80°**.

CRUISE CONTROL/SPEED LIMITER (continued 2)

Order	Function	Parameter, Status checked or Action	Display and Notes	Fault finding
2	Brake switch	**ET704:** Brake contact no. 1	Brake pedal released **INACTIVE**	In the event of a fault, consult the interpretation of statuses **ET704 and ET705**.
		ET705: Brake switch no. 2		
3	Clutch switch	**ET233:** Clutch pedal	Brake pedal released **RELEASED**	In the event of a fault, consult the interpretation of **DF070 Clutch switch circuit**.

GETtheMANUALS.org

NOTES	Only check conformity after a complete check using the diagnostic tool. The values shown in this conformity check are given as a guide. Test conditions: **Engine at idle speed, coolant temperature > 80°**.

ENGINE COOLING

Order	Function	Parameter, Status checked or Action		Display and Notes	Fault finding
1	Coolant temperature	**PR064:**	Coolant temperature	Shows the engine coolant temperature in °C **Default value: 119 °C**	In the event of a fault, refer to the interpretation of **DF001 Coolant temperature sensor circuit**.
2	Fan assemblies	**ET143:**	Low speed fan assembly relay control	**ACTIVE if air conditioning request**	If the fan units are supplied with the ignition on, the injection may be in defect mode. Carry out a system fault test and refer to the interpretation of faults.
		ET144:	Low speed fan assembly relay control	**INACTIVE**	
		ET014:	Check cooling fan 1	**RUNNING if air conditioning requested**	
		ET015:	Monitor cooling fan 2	**STOPPED**	
3	Sensor feed	**PR084:**	Coolant temperature sensor voltage	**1 < X < 2 V** **Safe value: 5 V**	In the event of a fault, refer to the interpretation of **DF001 Coolant temperature sensor circuit**.

GETtheMANUALS.org

NOTES	Only check conformity after a complete check using the diagnostic tool. The values shown in this conformity check are given as a guide. Test conditions: **Engine at idle speed, coolant temperature > 80°**.

IGNITION/PREHEATING

Order	Function	Parameter, Status checked or Action		Display and Notes	Fault finding
6	Power supply	**ET001:**	Computer + after ignition feed	**PRESENT**	In the event of a fault, carry out a fault finding procedure on the charge circuit.
7	Engine	**ET038:**	Engine	**RUNNING**	None
		PR055:	Engine speed	Gives the engine speed of rotation in rpm	In the event of a fault, refer to the interpretation for fault **DF005 Engine speed sensor circuit**.
8	Temperature	**PR058:**	Air temperature	Indicates the inlet air temperature in °C **Default value: 20 °C**	In the event of a fault, refer to the interpretation of fault **DF039 Inlet air temperature sensor circuit**
		PR064:	Coolant temperature	Shows the engine coolant temperature in °C **Default value: 119 °C**	In the event of a fault, refer to the interpretation of **DF001 Coolant temperature sensor circuit**.
9	Preheating	**ET007:**	Preheating unit control	**Status ET007 is ACTIVE a few seconds after the ignition is switched on and for the postheating**	In the event of a fault, (**ET007** locked in ACTIVE), refer to the interpretation of fault **DF017 Preheating unit control circuit**.
10	Power supply	**PR071:**	Computer feed voltage	**9 V < voltage < 16 V**	In the event of a fault, consult the interpretation of fault **DF047 computer supply voltage**.

GETtheMANUALS.org

NOTES	Only check conformity after a complete check using the diagnostic tool. The values shown in this conformity check are given as a guide. Test conditions: **Engine at idle speed, coolant temperature > 80°**.

STARTING

Order	Function	Parameter, Status checked or Action		Display and Notes	Fault finding
5	Power supply	**ET001:**	Computer + after ignition feed	**PRESENT**	In the event of a fault, carry out a fault finding procedure on the charge circuit.
6	Starting	**ET238:**	Synchronisation	**COMPLETED**	In the event of a fault, refer to fault interpretation **DF195 Camshaft/engine speed sensor consistency**.
		ET076:	Starting	**AUTHORISED**	If status **ET076 is PROHIBITED**, carry out a complete fault finding procedure on the multiplex network.
7	Engine operation.	**ET038:**	Engine	**RUNNING**	None
8	Power supply	**PR071:**	Computer feed voltage	**9 V < voltage < 16 V**	In the event of a fault, consult the interpretation of fault **DF047 Computer supply voltage**.
		PR358:	Sensor reference voltage	**3.4 V < voltage < 3.8 V**	None

GETtheMANUALS.org

NOTES	Only check conformity after a complete check using the diagnostic tool. The values shown in this conformity check are given as a guide. Test conditions: **Engine at idle speed, coolant temperature > 80°**.

PROTECTION

Order	Function	Parameter, Status checked or Action	Display and Notes	Fault finding
4	Engine immobiliser	**ET341:** Immobiliser code programmed	**YES**	If status ET341 is locked on NO (**see 87B, Passenger compartment connection unit**).
		ET003: Engine immobiliser	**INACTIVE**	If status ET003 is locked on ACTIVE (see **87B, Passenger compartment connection unit**).
5	Vehicle impact	**ET077:** Impact detected	**NO**	In the event of a fault, refer to the interpretation of fault **DF069 Impact detected signal**.
6	starting	**ET076:** starting	**AUTHORISED: injection authorises starting**	If status ET076 is PROHIBITED (see **87B, Passenger compartment connection unit**).

GETtheMANUALS.org

Tool status	Diagnostic tool title
ET001	+ After ignition computer feed
ET003	Engine immobiliser
ET004	Air conditioning authorisation
ET007	Preheating unit control
ET014	Check cooling fan 1
ET015	Monitor cooling fan 2
ET038	Engine
ET042	Cruise control/speed limiter
ET076	Starting
ET077	Impact detected
ET078	Air regulation
ET088	Compressor actuation request
ET104	Injector code use
ET143	Low speed fan assembly relay control
ET144	High-speed fan assembly relay control
ET205	Heating element no. 1 relay control
ET206	Heating element no. 2 relay control
ET207	Heating element no. 3 relay control
ET233	Clutch pedal
ET238	Synchronisation
ET341	Immobiliser code programmed
ET413	Cruise control/speed limiter function
ET556	Driver deactivation of the cruise control/speed limiter
ET557	Deactivation by cruise control/speed limiter function
ET587	Cooling of recirculated exhaust gas
ET612	Dynamic Regeneration
ET651	EGR programming cut-off
ET704	Brake switch No. 1
ET705	Brake switch no. 2

GETtheMANUALS.org

Tool status	Diagnostic tool title
ET706	Stored engine status no. 1
ET707	Stored engine status no. 2
ET708	Stored engine status no. 3
ET709	Stored engine status no. 4
ET710	Stored engine status no. 5
ET711	Stored engine status no. 6
ET712	Stored engine status no. 7
ET713	Stored engine status no. 8
ET714	Stored engine status no. 9
ET715	Stored engine status no. 10
ET742	Stored regeneration request status No. 1
ET743	Stored regeneration request status No. 2
ET744	Stored regeneration request status No. 3
ET745	Stored regeneration request status No. 4
ET746	Stored regeneration request status No. 5
ET747	Stored regeneration request status No. 6
ET748	Stored regeneration request status No. 7
ET749	Stored regeneration request status No. 8
ET750	Stored regeneration request status No. 9
ET751	Stored regeneration request status No. 10

GETtheMANUALS.org

ET001	COMPUTER + AFTER IGNITION FEED

NOTES	**Special note:** Only apply the checks if the ABSENT and PRESENT statuses are not consistent with the system operating strategies.

ABSENT	***NOTES***	Ignition on

Check the condition and conformity of the **FM6 (10A)** supply fuse.
Repair if necessary

Check for the presence of an earth on the following connections:
Injection computer black 32-track connector A, **Track G4** ⟶ **battery earth**
Injection computer black 32-track connector A, **Track H4** ⟶ **battery earth**
Injection computer black 32-track connector A, **Track H1** ⟶ **battery earth**
Repair if necessary.
Check for **+ 12 V** on track **D1** of connector A of the injection computer.
If there is no voltage, check the continuity and insulation to **earth** of the following connection:
Injection computer black 32-track connector A, Track **D1** ⟶ **+ 12 V after ignition**
Repair if necessary.

PRESENT	***NOTES***	Ignition on

Normal operating conditions.
Check that the **+ 12 V ignition feed** is not there when the ignition is switched off.
Repair if necessary.

AFTER REPAIR	Carry out a road test followed by another check with the diagnostic tool.

GETtheMANUALS.org

ET003	ENGINE IMMOBILISER

NOTES	**Special note:** Only perform the tests if the statuses do not correspond with the system programming functions.

ACTIVE	***NOTES***	If status **ET003** is stuck at **ACTIVE**, refer to the UCH fault finding note.

INACTIVE	***NOTES***	When the ignition is switched on, and when driving, status **ET003** should be **INACTIVE**. If not, refer to the refer to the UCH fault finding note.

AFTER REPAIR	Carry out a road test followed by another check with the diagnostic tool.

GETtheMANUALS.org

ET004	AC AUTHORISED

NOTES	**Special note:** Only perform the tests if the statuses do not correspond with the system programming functions.

YES	The air conditioning authorisation only changes to **YES** if: – the air conditioning request has been made by the driver (air conditioning switch in **AC** or **AUTO** position with minimum ventilation), – the engine is not under full load, – the air conditioning system is not faulty.

NO	Status **ET004** remains at **NO** under the following conditions: – Vehicle stopped with the ignition on, – faults present in the air conditioning circuit, – no air conditioning request made by the driver, – engine under full load. If status **ET004** remains **NO** then the air conditioning should be authorised, check: – that the air conditioning compressor is activated correctly, – the air conditioning system feed fuses, – the presence of refrigerant in the air conditioning circuit, – that the refrigerant fluid pressure value is consistent at idle speed. If the fault is still present, check the air conditioning computer for faults (see **62A, Air conditioning**).

AFTER REPAIR	Carry out a road test followed by another check with the diagnostic tool.

GETtheMANUALS.org

ET007	PRE-POSTHEATING UNIT CONTROL

NOTES	**Special note:** Only perform these tests if the statuses do not correspond with the system programming functions.

YES	When the vehicle is started from cold, the injection computer controls the pre-postheating unit so that the vehicle can be started. Status **ET007** becomes **YES** a few seconds after the ignition is switched on and during pre/postheating. If the vehicle does not start and status **ET007** becomes **YES**, check: – the **F2 (70A)** supply fuse on the preheating unit, – the resistance of the heater plugs. Replace any heater plug whose resistance is not approximately 0.6 Ω. If the vehicle starts and status **ET007** remains **YES** during the engine operating phase, refer to the interpretation of faults: – **DF017 Preheating unit control circuit.** – **DF025 Pre-postheating unit diagnostic connection.**

NO	After the engine is started and the preheating phase, the injection computer should stop the pre-postheating unit operating. Status **ET007** should become **NO**. In the event that the vehicle does not start and status **ET007** remains **NO**, check the continuity and absence of interference resistance of the following connections: Injection computer **grey 32-track connector C, Track A4** ⟶ **Track 9** preheating unit Injection computer **grey 32-track connector C, Track E2** ⟶ **Track 8** preheating unit Repair if necessary. If the fault is still present, refer to the interpretation of faults: – **DF017 Preheating unit control circuit.** – **DF025 Pre-postheating unit diagnostic connection.**

AFTER REPAIR	Carry out a road test followed by another check with the diagnostic tool.

GETtheMANUALS.org

ET014	CHECK COOLING FAN 1

NOTES	**Special note:** **Only perform these tests if the statuses do not correspond with the system programming functions.**

Note:
Status ET014 Cooling fan 1 check and status ET143 Low speed fan unit relay control change their status at the same time.

RUNNING	The low-speed engine fan is supplied in three scenarios: – the engine coolant temperature is above **89°C**, – **the air conditioning is operating,** – the injection computer has system faults that could lead to the engine overheating. When the low-speed fan assembly is supplied: – status **ET014** becomes **RUNNING** – status **ET143 Low speed fan unit relay control** becomes **ACTIVE**.
	If the low-speed fan unit does not operate, refer to the test for status **ET413 Low speed fan unit control**.
STOPPED	The low-speed fan assembly stops when: – the engine coolant temperature is below **89°C**, – the air conditioning is not switched on by the driver.

AFTER REPAIR	Carry out a road test followed by another check with the diagnostic tool.

GETtheMANUALS.org

ET015	CHECK COOLING FAN 2

NOTES	**Special note:** **Only perform these tests if the statuses do not correspond with the system programming functions.**

Note:
Statuses ET015 Cooling fan 2 check and ET144 High speed fan unit relay control change their status at the same time.

RUNNING	The engine fan assembly can be supplied when: – the engine coolant temperature is above **99°C**. – the injection computer has system faults that could lead to the engine overheating. When the low-speed fan assembly is supplied: – status **ET015** becomes **RUNNING**, – status **ET144 High speed fan control relay** becomes **ACTIVE**.
	If the high-speed fan unit does not operate, refer to the test for status **ET144 High-speed fan unit relay control**.
STOPPED	The low-speed fan assembly stops when: – the engine coolant temperature is below **99°C**;

AFTER REPAIR	Carry out a road test followed by another check with the diagnostic tool.

GETtheMANUALS.org

ET038	ENGINE
STOPPED	Status **ET038** is STOPPED if the engine ignition is on but there has been no starter operation.
STALLED	Status **ET038** is STALLED when the engine has stalled. The vehicle is still under + after ignition feed.
RUNNING	Status **ET038** is RUNNING if the engine has started.
STARTING	Status **ET038** is Starter when the engine is in its starting phase.

AFTER REPAIR	Carry out a road test followed by another check with the diagnostic tool.

GETtheMANUALS.org

ET042	CRUISE CONTROL/SPEED LIMITER

NOTES	**Special note:** Only perform these tests if the statuses do not correspond with the system programming functions.

CRUISE CONTROL

Status **ET042** becomes **CRUISE CONTROL** when the **cruise control activation button** is pressed. This button is situated on the instrument panel, or on the centre console of the vehicle.
A **green** instrument panel warning light comes on when status **ET042** is at **CRUISE CONTROL**.
If status **ET042** does not change to **CRUISE CONTROL**, check the **ON/OFF** button of the cruise control, and the condition of its connector.
Repair if necessary.
Check **for continuity and make sure there is no interference resistance** on the following connection:
Injection computer black 32-track connector C, **track A2** ⟶ Cruise control on/off button 6-track connector **track A3**
Repair if necessary.

SPEED LIMITER

Status **ET042** becomes **SPEED LIMITER** when the **speed limiter activation button** is pressed. This button is situated on the instrument panel, or on the centre console of the vehicle.
A **yellow** instrument panel warning light lights when status **ET042** is **SPEED LIMITING**.
If status **ET042** does not change to **SPEED LIMITER**, check the **ON/OFF** button of the speed limiter, and the condition of its connector.
Repair if necessary.
Check **for continuity and make sure there is no interference resistance** on the following connection:
Injection computer black 32-track connector A **track C3** ⟶ Cruise control on/off button 6-track connector **track B1**
Repair if necessary.

AFTER REPAIR	Carry out a road test followed by another check with the diagnostic tool.

GETtheMANUALS.org

ET076	STARTING

NOTES	**Special note:** Only perform the tests if the statuses do not correspond with the system programming functions.

AUTHORISED	Starting the vehicle is authorised when the UCH authorises starting. Status **ET076** changes to **AUTHORISED** if the vehicle cards are recognised and the engine immobiliser is inactive.
PROHIBITED	If the card is not recognised by the UCH, starting the vehicle is not authorised. Status **ET076** is **PROHIBITED** and the vehicle cannot be started. Carry out fault finding on the UCH and refer to the relevant fault finding note for the vehicle to deal with any faults.

AFTER REPAIR	Carry out a road test followed by another check with the diagnostic tool.

GETtheMANUALS.org

ET077	IMPACT DETECTED

NOTES	**Special note:** Only perform the tests if the statuses do not correspond with the system programming functions.

YES	If the vehicle has been involved in an accident, the injection computer receives the impact signal via the multiplex network and may switch off the ignition. Status **ET077** is **YES**. Switch off the ignition for 10 seconds, then switch it back on, so the engine can be restarted. After the repair, clear the faults (even if no fault is displayed). Carry out a multiplex network test and deal with any faults.
NO	Under normal operating conditions, status **ET077** is **NO** when the computer has received no impact signal.

AFTER REPAIR	Carry out a road test followed by another check with the diagnostic tool.

GETtheMANUALS.org

ET088	REQUEST TO START COMPRESSOR
ACTIVE	The air conditioning request has been made by the driver when pressing one of the air conditioning controls (Auto or AC). Status **ET088 becomes ACTIVE** and the computer authorises or does not authorise air conditioning depending on the operating conditions. If status **ET088** does not become **ACTIVE** after the control button is operated, consult the vehicle's associated air conditioning fault finding note.
INACTIVE	When the driver deactivates the air conditioning, status **ET088** must become **INACTIVE**. If it does not, consult the vehicle's associated air conditioning fault finding note.

AFTER REPAIR	Carry out a road test followed by another check with the diagnostic tool.

GETtheMANUALS.org

ET104	INJECTOR CODE USE

NOTES	**Special note:** Only perform these tests if the statuses do not correspond with the system programming functions.

YES	When injector code programming is complete, status **ET104 Injector code operation** changes to **YES**.
NO	– If status **ET104 Injector code operation** is **NO**, program the injector codes using: either command **SC002 Enter injector codes** or command **SC001 Enter saved data** when **replacing with a blank computer or after reprogramming** (Consult the procedures defined in the **Interpretation of commands** section).
FAULTY	– If status **ET104 Injector code operation** is **NO**, program the injector codes using: either command **SC002 Enter injector codes** or command **SC001 Enter saved data** when **replacing with a blank computer or after reprogramming** (see the procedures defined in the **Interpretation of commands** section).

AFTER REPAIR	Carry out a road test followed by another check with the diagnostic tool.

GETtheMANUALS.org

ET122 **ET123**	BRAKE CONTACT SIGNAL No. 1 BRAKE CONTACT No. 2 SIGNAL

NOTES	**Special note:** **Only perform the tests if the statuses do not correspond with the system programming functions.**

Note:
Statuses ET122 and ET123 should change statuses at the same time. In the event of inconsistency, refer to the interpretation of fault DF050 Brake switch circuit.

***IMPORTANT:**
Two types of switch are used. Only the track assignments are different:
The first type uses tracks A1, B3, A3 and B1,
The second uses tracks 1, 2, 3 and 4.

INACTIVE
(Brake pedal depressed)

If the brake lights are working:
– check the continuity and make sure there is no interference resistance on the following connection:
Injection computer black 32-track **connector A track E4** ⟶ **Track 3 or A3***
Brake pedal switch
Repair if necessary.
If the brake lights are not operational, check:
– the condition and fitting of the brake switch,
– the condition and conformity of fuse 1H (15A),
– the conformity of the values in the following table:

	Continuity between tracks	**Insulation between tracks**
Switch pressed (Brake pedal released)	**3 and 4 or A3 and B1**	**1 and 2 or A1 and B3**
Switch released (Brake pedal depressed)	**1 and 2 or A1 and B3**	**3 and 4 or A3 and B1**

Replace the switch if the values obtained are not correct.

AFTER REPAIR	Carry out a road test followed by another check with the diagnostic tool.

GETtheMANUALS.org

ET122 **ET123** **CONTINUED**	

***IMPORTANT:**
Two types of switch are used. Only the track assignments are different:
The first type uses tracks A1, B3, A3 and B1,
The second uses tracks 1, 2, 3 and 4.

ACTIVE
(brake pedal released)

If the brake lights are working:
– check the continuity and make sure there is no interference resistance on the following connection:
Injection computer black 32-track **connector A track E4** ⟶ **Track 3 or A3***
Brake pedal switch
Repair if necessary.
If the brake lights are not working.
check the condition and fitting of the brake light switch and brake light fuse,
remove the brake light switch and check that it is operating correctly:

	Continuity between tracks	**Insulation between tracks**
Switch pressed (Brake pedal released)	**3 and 4 or A3 and B1**	**1 and 2 or A1 and B3**
Switch released (Brake pedal depressed)	**1 and 2 or A1 and B3**	**3 and 4 or A3 and B1**

Replace the switch if the values obtained are not correct.

AFTER REPAIR	Carry out a road test followed by another check with the diagnostic tool.

GETtheMANUALS.org

ET143	LOW-SPEED FAN ASSEMBLY RELAY CONTROL

NOTES	**Special note:** **Only perform these tests if the statuses do not correspond with the system programming functions.**

Note:
Status ET014 Cooling fan 1 check and status ET143 Low speed fan unit relay control change their status at the same time.

ACTIVE	The injection computer requests the activation of the low speed GMV when: – the engine coolant temperature is above **89°C**, – the injection computer has system faults that could lead to the engine overheating, – the air conditioning is switched on by the driver. When the high speed fan is supplied: – status **ET143 Low speed fan unit relay control** becomes **ACTIVE**, – status **ET014** becomes **RUNNING**. If the low-speed fan unit does not operate (see interpretation of faults, DF176 low-speed fan unit circuit).
STOPPED	The low-speed fan assembly stops when: – the engine coolant temperature is below **89°C**, – **no fault which could cause engine overheating is present in the injection system.** – **the air conditioning is not switched on by the driver.**

AFTER REPAIR	Carry out a road test followed by another check with the diagnostic tool.

GETtheMANUALS.org

ET144	HIGH-SPEED FAN ASSEMBLY RELAY CONTROL

NOTES	**Special note:** **Only perform these tests if the statuses do not correspond with the system programming functions.**

Note:
Statuses ET015 Cooling fan 2 check and ET144 High speed fan unit relay control change their status at the same time.

RUNNING	The injection computer requests the activation of the high speed GMV when: – the engine coolant temperature is above **99°C**. – the injection computer has system faults that could lead to the engine overheating. When the high speed fan is supplied: – status **ET144 High speed fan unit relay control** becomes **ACTIVE**, – status **ET015** becomes **RUNNING**. If the high-speed fan unit does not operate (see interpretation of faults, DF177 High-speed fan unit circuit).
STOPPED	The high-speed fan assembly stops when: – the engine coolant temperature is below **99°C**; – **no fault which could cause engine overheating is present in the injection system.**

AFTER REPAIR	Carry out a road test followed by another check with the diagnostic tool.

GETtheMANUALS.org

ET205 **ET206** **ET207**	THERMOPLUNGER No. 1, 2, 3 RELAY CONTROL

INACTIVE	Statuses **ET205, ET206, ET207** are **INACTIVE** when the ignition is on and the engine stopped, or when the engine is warm.

ACTIVE	Statuses **ET205, ET206, ET207** are **ACTIVE** when: – the engine has been started, – and the engine coolant temperature is low (**< 15°**), – and the air temperature is low (**< 5°**). This program allows the engine coolant to be heated and to enable the passenger compartment to be heated. To control the operation of the thermoplunger relays, run the following commands: **AC063 Heating element no. 1 relay** **AC064 Heating element no. 2 relay** **AC031 Heating element no. 3 relay** In the event of a fault, refer to the interpretation of faults: **DF238 Thermoplunger no. 3 relay circuit** **DF239 Thermoplunger no. 2 relay circuit** **DF240 Thermoplunger no. 1 relay circuit**

AFTER REPAIR	Carry out a road test followed by another check with the diagnostic tool.

EDC16_V08_ET205/EDC16_V10_ET205/EDC16_V14_ET205/
EDC16_V08_ET206/EDC16_V10_ET206/EDC16_V14_ET206/
EDC16_V08_ET207/EDC16_V10_ET207/EDC16_V14_ET207

GETtheMANUALS.org

ET233	CLUTCH PEDAL

NOTES	**Special note:** Only perform these tests if the statuses do not correspond with the system programming functions.

***IMPORTANT:**
Two types of switch are used. Only the allocation of tracks is different:
The first type uses tracks A1 and B3,
The second uses tracks 1 and 2.

RELEASED and clutch pedal depressed

Check the condition and fitting of the clutch pedal switch.
Check the continuity and absence of interference resistance on the following connection:
Injection computer black 32-track connector A **track C4** ⟶ **Track 2 or A1***
Clutch switch
Check the presence of earth on track 1 or B3* of the clutch switch connector. Repair if necessary.
Remove the clutch pedal switch and check that it is functioning correctly.

	Continuity between tracks	**Insulation between tracks**
Switch pressed (Brake pedal released)	**1 and 2 or A1 and B3***	
Switch released (Brake pedal depressed)		**1 and 2 or A1 and B3***

Replace the clutch pedal switch if necessary.

DEPRESSED and clutch pedal released

Check the condition and fitting of the clutch pedal switch.
Remove the clutch pedal switch and check that it is functioning correctly.

	Continuity between tracks	**Insulation between tracks**
Switch pressed (Brake pedal released)	**1 and 2 or A1 and B3***	
Switch released (Brake pedal depressed)		**1 and 2 or A1 and B3***

Replace the switch if necessary.

AFTER REPAIR	Carry out a road test followed by another check with the diagnostic tool.

GETtheMANUALS.org

ET238	SYNCHRONISATION

NOTES	**Special note:** Only perform the tests if the statuses do not correspond with the system programming functions.

WARNING
Synchronisation is carried out during the engine starting phase. This is established between the camshaft position sensor and the TDC sensor.
Once this synchronisation has been carried out, it enables the computer to identify cylinder no. 1 and to calculate the precise position of the cylinder's Top Dead Centre.

NOT PERFORMED	When the engine is stopped but the ignition switched on, cylinder no. 1 is no longer indicated. Status **ET238** is **NOT DONE**; synchronisation between the crankshaft and the camshaft has not been carried out.
COMPLETED	Synchronisation is carried out during the engine starting phase. Cylinder No. 1 is indicated and synchronisation will be performed once the engine is started. Status **ET238** is **COMPLETED**. If after several attempts to start the engine status **ET238** remains **INACTIVE**, refer to the interpretation of the following faults: – **DF005 Engine speed sensor circuit.** – **DF097 Camshaft sensor circuit.** If the engine does not start, refer to **ALP 2 Starting faults** (see **Customer complaints**).

AFTER REPAIR	Carry out a road test followed by another check with the diagnostic tool.

GETtheMANUALS.org

ET341	IMMOBILISER CODE PROGRAMMED

NOTES	**Special note:** Only perform the tests if the statuses do not correspond with the system programming functions.

YES	Status **ET341** becomes YES if there is dialogue between the UCH and the injection computer and the card code is recognised. Engine starting authorisation is only given if the code is recognised by the UCH computer, and status **ET003 Engine immobiliser** is **INACTIVE**.
NO	The code remains **NO** if dialogue between the UCH and the injection computer is not possible. Status **ET003 Engine immobiliser** is **ACTIVE**. The cause of the fault may be incorrect card programming (in this case refer to the fault finding note and follow the UCH card programming procedure). If it is not caused by the card codes, carry out a multiplex network test (if the previous fault finding check was by function), and check that dialogue is established between the UCH and the injection computer. If dialogue is not established, contact the Techline.

AFTER REPAIR	Carry out a road test followed by another check with the diagnostic tool.

GETtheMANUALS.org

ET413	CRUISE CONTROL/SPEED LIMITER FUNCTION

NOTES	**Special notes:** Only perform these tests if the statuses do not correspond with the system programming functions.

INCREASE

Status **ET413** becomes INCREASE when the cruise control **+** button is pressed. This button is situated to the left of the steering wheel.
If status **ET413** does not become INCREASE, check the condition of the ± cruise control button and its connector. Repair if necessary.
To be able to remove the driver's airbag and carry out the measurements in complete safety (see 88C, Airbag and pretensioners).
Repair if necessary.
Measure **the resistance of the following connection, after pressing the "+" button**:
Injection computer black 32 track connector A **track D2** ⟶ **"±"** button **Track 2**
Injection computer black 32 track connector A **track D3** ⟶ **"±"** button **Track 1**
If the resistance is not approximately **300** Ω, check the continuity of the connection when the button is not pressed.
If there is continuity, replace the **+/-** control button.
If the connection is broken, repair it.

DECREASE

Status **ET413** becomes DECREASE when the **-** button for the cruise control is pressed. This button is situated to the left of the steering wheel.
If status **ET413** does not become DECREASE, check the condition of the ± cruise control button and its connector.
Repair if necessary.
To be able to remove the driver's airbag and carry out the measurements in complete safety (see 88C, Airbag and pretensioners).
Repair if necessary.
Measure the **resistance of the following connection, after pressing the - button**:
Injection computer black 32 track connector A **track D2** ⟶ **"±"** button **Track 2**
Injection computer black 32 track connector A **track D3** ⟶ **"±"** button **Track 1**
If the resistance is not approximately **100** Ω, check the continuity of the connection when the button is not pressed.
If there is continuity, replace the ± control button.
If the connection is broken, repair it.

AFTER REPAIR	Carry out a road test followed by another check with the diagnostic tool.

GETtheMANUALS.org

ET413 CONTINUED	

SUSPEND	Status **ET413** becomes CANCEL when the **0** cruise control button is pressed. This button is situated to the right of the steering wheel. If status **ET413** does not change to SUSPEND, check the **R/0** button of the cruise control, and the condition of its connector. Repair if necessary. **To be able to remove the driver's airbag and carry out the measurements in complete safety (see 88C, Airbag and pretensioners).** Repair if necessary. Measure the **resistance of the following connection, after pressing the 0 button**: Injection computer black 32 track connector A **track D2** ⟶ **"R/0" button Track 2** Injection computer black 32 track connector A **track D3** ⟶ **"R/0" button Track 1** If the resistance is not approximately **0** Ω, replace the **R/0** control button. If the connection is broken, repair it.
RESUME	Status **ET413** becomes RESTART when the **R** cruise control button is pressed. This button is situated to the right of the steering wheel. If status **ET413** does not change to RESUME, check the **R/0** button of the cruise control, and the condition of its connector. Repair if necessary. **To be able to remove the driver's airbag and carry out the measurements in complete safety (see 88C, Airbag and pretensioners).** Repair if necessary. Measure the **resistance of the following connection, after pressing the R button**: Injection computer black 32 track connector A **track D2** ⟶ **"R/0" button Track 2** Injection computer black 32 track connector A **track D3** ⟶ **"R/0" button Track 1** If the resistance is not approximately **900** Ω, check the continuity of the connection when the button is not pressed. If there is continuity, then replace the **R/0** control button. If the connection is broken, repair it.

AFTER REPAIR	Carry out a road test followed by another check with the diagnostic tool.

GETtheMANUALS.org

ET556	DRIVER'S DEACTIVATION OF THE CRUISE CONTROL/SPEED LIMITER

NOTES	**Special notes:** Apply the conformity check to see if the statuses are consistent with the operating programs of the system.

Note:
Cruise control can be activated when the vehicle speed exceeds **18 mph (30 km/h)**.
Status **ET556** details 6 causes for cruise control deactivation.
IMPORTANT
To reinitialise the deactivations stored by the injection computer, use command RZ007 Fault memory.

STATUS 1	**Brake pedal depressed**
	The cruise control function is deactivated each time the brake pedal is depressed. Status **ET556** becomes **STATUS 1**, when the vehicle is being driven, with cruise control active and the brake pedal depressed. If status **ET556** becomes **STATUS 1** without depressing the brake pedal, consult the interpretation of statuses **ET704** and **ET705 Brake contact no.1 and no. 2.**
STATUS 2	**Traction control request**
	If the vehicle being diagnosed is fitted with traction control, the cruise control function is deactivated each time traction control is selected. Status **ET556** changes to **STATUS 2**, when driving, with cruise control active and traction control requested. If status **ET556** becomes **STATUS 2** with no traction control request (see **38C, Anti-lock Braking System**).
STATUS 3	**Suspend button pressed**
	Status **ET556** changes to **STATUS 3** when driving with Cruise control/Speed limiter active, if the driver presses the Cruise control/Speed limiter **0** button. If status **ET556** becomes **STATUS 3** without button **0** on the Cruise control/Speed limiter being pressed, consult the interpretation of status **ET413 Cruise control/Speed limiter function** and run fault finding on the **R/0** control button of the Cruise control/Speed limiter.

AFTER REPAIR	Carry out a road test followed by another check with the diagnostic tool.

GETtheMANUALS.org

ET556 CONTINUED	

STATUS 4	**Clutch pedal depressed**
	MANUAL GEARBOX ONLY The cruise control function is deactivated if the gearbox is no longer coupled to the engine (clutch pedal depressed). Status **ET556** becomes **STATUS 4** when driving, with cruise control active and the clutch pedal depressed. If status **ET556** becomes **STATUS 4** without the clutch pedal being depressed, consult the interpretation of status **ET233 Clutch pedal**.

STATUS 5	**Gear lever in neutral position**
	Status **ET556** changes to **STATUS 5**, when driving, with cruise control active and – if the driver puts the gear lever in neutral on a manual gearbox without declutching or, – if gear lever is in neutral on an automatic transmission. This deactivates cruise control. If status **ET556** becomes **STATUS 5** without putting the gear lever in neutral on a manual gearbox without declutching, or without neutral on an automatic transmission, contact the Techline.

STATUS 6	**Lack of correlation between the request and the vehicle speed**
	Status **ET556** changes to **STATUS 6** if the computer detects too great a difference between the speed requested by the driver and the vehicle speed. This may occur when driving, with cruise control active and where the difference between speeds is great. If status **ET556** changes to **STATUS 6** without a great difference in the speeds, contact the Techline.

AFTER REPAIR	Carry out a road test followed by another check with the diagnostic tool.

GETtheMANUALS.org

ET557	CRUISE CONTROL/SPEED LIMITER DEACTIVATION BY FUNCTION

NOTES	**Special notes:** Only perform these tests if the statuses do not correspond with the system programming functions.

Note:
Cruise control remains deactivated as long as the vehicle speed does not exceed **18 mph (30 km/h)**. Status **ET557** gives 3 causes of cruise control deactivation.
IMPORTANT
To reinitialise the deactivations stored by the injection computer, use command RZ007 Fault memory.

STATUS 1	**Cruise control or speed limiter fault**
	If status **ET557** is **STATUS 1**, refer to the interpretation of status **ET042 Cruise control/ speed limiter** and **ET413 Cruise control/speed limiter function**, to test the components of the cruise control system and find the faulty one. If status **ET557** changes to **STATUS 1**, deal with the faults present or stored in the computer. If the fault is still present, contact the Techline.

STATUS 2	**Fault detected by the injection computer**
	Status **ET557** changes to **STATUS 2** if the injection computer detects a fault on the injection system: – **faults in the engine speed sensor or camshaft,** – **accelerator pedal faults,** – **engine speed lower than 1000 rpm,** – **engine speed greater than 4700 rpm.** Carry out a multiplex network test, then an injection system test, and carry out fault finding on any faults. If the fault is still present, contact the Techline.

STATUS 3	**Invalid vehicle speed**
	Status **ET557** changes to **STATUS 3** if the vehicle speed received by the computer is invalid. Carry out fault finding on the **ABS** computer. If faults are present (see **38C, Anti-lock braking system**). If the fault is still present, contact the Techline.

AFTER REPAIR	Carry out a road test followed by another check with the diagnostic tool.

GETtheMANUALS.org

ET651	EGR PROGRAMMING CUT-OFF

NOTES	**Special notes:** Only perform these tests if the status does not correspond with the system programming functions.

NONE	**No EGR cut-off, the EGR valve is working properly in accordance with the computer programs.**
STATUS 1, 5, 6, 7, 9, 10, 12, 13, 15, 19 23, 24	Switch off the engine and wait for the following message to appear on the **diagnostic tool: Loss of dialogue with the computer: EDC16 C3, check the connection of the tool and the computer supply voltage.** Switch the ignition on and check for faults. Check the engine battery voltage with the engine switched off and the engine running. If no faults are present or stored, restart the vehicle and test at idle speed. **Do not accelerate too much or attain an engine speed that is too high.**
STATUS 3, 14, 16	Accelerate above idling speed for a few seconds.
STATUS 2	Check that the clutch pedal (**ET233 Clutch pedal**) is not depressed, and that the vehicle is completely stopped.
STATUS 4, 17	Check for present and stored faults, and repair.
STATUS 8	Reset the EGR offsets by referring to the interpretation of command **SC036 Reset programming** and select **EGR valve**.
STATUS 11, 22	Allow the engine to heat up until this cut-off disappears.
STATUS 18	Check that the regeneration of the particle filter in progress has completely finished.
STATUS 20	Allow the engine to cool until this cut-off disappears.
STATUS 21	Too low atmospheric pressure, the EGR valve is disabled.

AFTER REPAIR	Carry out a road test followed by another check with the diagnostic tool.

GETtheMANUALS.org

ET704 **ET705**	BRAKE SWITCH NO. 1 BRAKE SWITCH NO. 2

NOTES	**Special note:** Only perform the tests if the statuses do not correspond with the system programming functions.

Note:
Statuses **ET704 and ET705** should change status at the same time. In the event of inconsistency, refer to the interpretation of fault **DF050 Brake switch circuit**.

AFTER REPAIR	Carry out a road test followed by a **complete check** with the **diagnostic too**l.

GETtheMANUALS.org

ET704 **ET705** **CONTINUED**	

ACTIVE
or
INACTIVE

If the brake lights are working:
check the continuity and make sure there is no interference resistance on the following connection:
– Connection code **5A between components 160 and 120/645/119**.
If there is a repair procedure (see **Technical Note 6015A, Electrical wiring repair, Wiring: Precautions for repair**), repair the wiring, otherwise replace the wiring.
If the brake lights are not operational, check:
– the condition and fitting of the brake switch,
– the condition and conformity of the brake light fuse,
– the conformity of the values in the following table:
disconnect the switch and carry out the following checks:

For Vel satis without ESP

	Continuity between connections	Insulation between connections
Switch pressed (Brake pedal released)	**5A and SP13**	**65G and AP10**
Switch released (Brake pedal depressed)	**65G and AP10**	**5A and SP13**

For Vel satis with ESP

	Continuity between connections	Insulation between connections
Switch pressed (Brake pedal released)	**5A and SP13**	**65A and AP10**
Switch released (Brake pedal depressed)	**65A and AP10**	**5A and SP13**

For Laguna II

	Continuity between connections	Insulation between connections
Switch pressed (Brake pedal released)	**5A and SP13**	**65A and AP10**
Switch released (Brake pedal depressed)	**65A and AP10**	**5A and SP13**

AFTER REPAIR	Carry out a road test followed by a **complete check** with the **diagnostic too**l.

GETtheMANUALS.org

ET706 **ET707** **ET708** **ET709** **ET710** **ET711** **ET712** **ET713** **ET714** **ET715**	STORED ENGINE STATUS NO. 1 STORED ENGINE STATUS NO. 2 STORED ENGINE STATUS NO. 3 STORED ENGINE STATUS NO. 4 STORED ENGINE STATUS NO. 5 STORED ENGINE STATUS NO. 6 STORED ENGINE STATUS NO. 7 STORED ENGINE STATUS NO. 8 STORED ENGINE STATUS NO. 9 STORED ENGINE STATUS NO. 10

NOTES	**Special note:** Interpret these parameters only for **DF312 Speed request** if it is present or stored.

Each **STATUS** between **ET706** and **ET715** corresponds to the engine status during a regeneration failure for which the mileage is saved by **PR794 Saved regeneration failure no. 1 to PR803 Saved regeneration failure no. 10** (for example, **PR797 Saved regeneration failure no. 4 is related to ET709 Saved engine status no. 4**).

"RUNNING"	If the **STATUS** is **RUNNING**, the regeneration failed because: – the customer's driving did not generate enough heat, – an engine management system component is faulty.

"STOPPED"	If the **STATUS** is **STOPPED**, regeneration has failed due to engine cut-off.

+ APC	POWER LATCH

"NONE"	No failed regeneration is present.

AFTER REPAIR	Carry out a road test followed by a complete check with the **diagnostic tool**.

EDC16_V08_ET706/EDC16_V08_ET707/EDC16_V08_ET708/EDC16_V08_ET709/
EDC16_V08_ET710/EDC16_V08_ET711/EDC16_V08_ET712/EDC16_V08_ET713/
EDC16_V08_ET714/EDC16_V08_ET715/EDC16_V10_ET706/EDC16_V10_ET707/
EDC16_V10_ET708/EDC16_V10_ET709/EDC16_V10_ET710/EDC16_V10_ET711/
EDC16_V10_ET712/EDC16_V10_ET713/EDC16_V10_ET714/EDC16_V10_ET715/
EDC16_V14_ET706/EDC16_V14_ET707/EDC16_V14_ET708/EDC16_V14_ET709/
EDC16_V14_ET710/EDC16_V14_ET711/EDC16_V14_ET712/EDC16_V14_ET713/
EDC16_V14_ET714/EDC16_V14_ET715

GETtheMANUALS.org

ET742 **ET743** **ET744** **ET745** **ET746** **ET747** **ET748** **ET749** **ET750** **ET751**	STORED REGEN. REQUEST STATUS No. 1 STORED REGEN. REQUEST STATUS No. 2 STORED REGEN. REQUEST STATUS No. 3 STORED REGEN. REQUEST STATUS No. 4 STORED REGEN. REQUEST STATUS No. 5 STORED REGEN. REQUEST STATUS No. 6 STORED REGEN. REQUEST STATUS No. 7 STORED REGEN. REQUEST STATUS No. 8 STORED REGEN. REQUEST STATUS No. 9 STORED REGEN. REQUEST STATUS No. 10

NOTES	**Special note:** These statuses are to be interpreted only for **ALP8 Particle filter warning light comes on too often**.

Statuses **ET742** to **ET751** correspond to the causes for the regeneration request. They are associated with the parameters **PR816 Stored regeneration start no.1** to **PR825 Stored regeneration restart no. 10** which contain the record of the vehicle mileage at the start of regeneration (e.g. **PR745 Stored regeneration start no. 4** is associated with **ET709 Stored regeneration request status no. 4**).

STATUS 1	**Request by weight of soot** Regeneration has been requested following measurement of the maximum weight of soot in the particle filter, without the particle filter warning light coming on.
STATUS 2	**Request by estimated weight of soot** Regeneration has been requested following an estimate of the maximum weight of soot in the particle filter, without the particle filter warning light coming on.
STATUS 3	**Request by distance travelled** Regeneration has been requested as the distance travelled since the last successful regeneration has reached the maximum authorised value (the particle filter warning light has not come on).
STATUS 4	**Request by number of failed regenerations or soot weight** This status corresponds to the appearance of **DF312 Speed request**. This corresponds to the maximum number of failed regenerations or to the maximum weight of soot in the particle filter, with the particle filter warning light coming on.

AFTER REPAIR	Carry out a road test followed by a complete check with the **diagnostic tool**.

EDC16_V08_ET742/EDC16_V08_ET743/EDC16_V08_ET744/EDC16_V08_ET745/
EDC16_V08_ET746/EDC16_V08_ET747/EDC16_V08_ET748/EDC16_V08_ET749/
EDC16_V08_ET750/EDC16_V08_ET751/EDC16_V10_ET742/EDC16_V10_ET743/EDC16_V10_ET744/EDC16_V10_ET745/
EDC16_V10_ET746/EDC16_V10_ET747/EDC16_V10_ET748/EDC16_V10_ET749/EDC16_V10_ET750/EDC16_V10_ET751/
EDC16_V14_ET742/EDC16_V14_ET743/EDC16_V14_ET744/EDC16_V14_ET745/
EDC16_V14_ET746/EDC16_V14_ET747/EDC16_V14_ET748/EDC16_V14_ET749/
EDC16_V14_ET750/EDC16_V14_ET751

GETtheMANUALS.org

Tool parameter	Diagnostic tool title
PR005	EGR valve opening setpoint
PR006	Rail pressure regulator current
PR007	Rail pressure regulator current setpoint
PR008	Rail pressure setpoint
PR009	Turbocharging pressure setpoint
PR011	Turbocharging solenoid valve position correction
PR013	Swirl flap position correction (Except Velsatis ph2 Vdiag 14)
PR015	Engine torque
PR016	Alternator output (not present on Vdiag 08)
PR017	Fuel flow
PR022	EGR valve position feedback loop difference
PR024	Fuel pressure deviation (not present on Vdiag 08)
PR030	Accelerator pedal position
PR035	Atmospheric pressure
PR038	Rail pressure
PR041	Turbocharging pressure
PR046	EGR solenoid valve opening cycle ratio (not present on Vdiag 08)
PR047	Turbocharging pressure OCR
PR048	Rail pressure regulation valve OCR
PR049	Turbulence flap opening cycle ratio (only affects Vdiag 08)
PR051	EGR valve position feedback
PR053	Speed requested by air conditioning
PR055	Engine speed
PR058	Air temperature
PR063	Fuel temperature
PR064	Coolant temperature
PR071	Computer supply voltage
PR073	Air flowmeter feed voltage
PR076	Refrigerant sensor voltage (not present on Vdiag 08)

GETtheMANUALS.org

Tool parameter	Diagnostic tool title
PR077	EGR valve position sensor voltage
PR079	Atmospheric pressure sensor voltage
PR080	Rail pressure sensor voltage
PR082	Fuel pressure sensor voltage
PR083	Air temperature sensor voltage
PR084	Coolant temperature sensor voltage
PR089	Vehicle speed
PR125	Power absorbed by the air conditioning compressor (not present on Vdiag 08)
PR127	Heating resistor maximum authorised power (not present on Vdiag 08)
PR128	First EGR valve offset
PR129	Last EGR valve offset
PR130	Cruise control setpoint
PR131	EGR air flow variation
PR132	Air flow
PR146	Inlet air flow
PR147	Pedal potentiometer voltage gang 1
PR148	Pedal potentiometer voltage gang 2
PR157	Fuel flow setpoint
PR171	Air flow setpoint for EGR
PR190	Engine idle speed setpoint.
PR209	Turbocharging pressure loop difference
PR213	Rail pressure loop difference
PR220	EGR valve OCR*
PR358	Sensor reference voltage
PR364	Cylinder no. 1 fuel flow correction
PR365	Cylinder no. 4 fuel flow correction
PR381	Particle filter downstream temperature (Except VELSATIS ph2 Vdiag 14)
PR382	Particle filter upstream temperature

* OCR: Opening cycle ratio

GETtheMANUALS.org

Tool parameter	Diagnostic tool title
PR383	Weight of soot in the particle filter
PR384	Particle filter downstream pressure
PR385	Exhaust pipe flow
PR391	Mileage since particle filter replacement
PR401	Thermoplungers power request
PR403	Idle speed request by the thermoplungers
PR405	Cylinder no. 2 fuel flow correction
PR406	Cylinder no. 3 fuel flow correction
PR412	Mileage at last successful regeneration
PR414	Particle filter differential pressure
PR415	Time since last regeneration
PR417	Damper valve OCR*
PR420	Damper valve error counter
PR672	Damper valve position setpoint
PR784	DF312 recording No. 1
PR785	DF312 recording No. 2
PR786	DF312 recording No. 3
PR787	DF312 recording No. 4
PR788	DF312 recording No. 5
PR789	DF312 recording No. 6
PR790	DF312 recording No. 7
PR791	DF312 recording No. 8
PR792	DF312 recording No. 9
PR793	DF312 recording No. 10
PR794	Stored regeneration failure no. 1
PR795	Stored regeneration failure no. 2
PR796	Stored regeneration failure no. 3
PR797	Stored regeneration failure no. 4

*** OCR:** Opening Cyclic Ratio

GETtheMANUALS.org

Tool parameter	Diagnostic tool title
PR798	Stored regeneration failure no. 5
PR799	Stored regeneration failure no. 6
PR800	Stored regeneration failure no. 7
PR801	Stored regeneration failure no. 8
PR802	Stored regeneration failure no. 9
PR803	Stored regeneration failure no. 10
PR816	Stored regeneration start no. 1
PR817	Stored regeneration start no. 2
PR818	Stored regeneration start no. 3
PR819	Stored regeneration start no. 4
PR820	Stored regeneration start no. 5
PR821	Stored regeneration start no. 6
PR822	Stored regeneration start no. 7
PR823	Stored regeneration start no. 8
PR824	Stored regeneration start no. 9
PR825	Stored regeneration start no. 10
PR1012	Weight of soot after regeneration

GETtheMANUALS.org

Tool command	Diagnostic tool title
SC001	Write saved data
SC002	Enter injector codes
SC003	Save computer data
SC017	Particle filter regeneration
SC036	Reinitialise programming
RZ005	Programming
RZ007	Fault memory
LC009	Air conditioning
LC056	Heating elements
LC065	Water in diesel fuel sensor
LC120	Cruise control
LC121	Speed limiter
VP010	Enter VIN
VP036	Fuel supply inhibited
VP037	Lift fuel supply inhibition

GETtheMANUALS.org

Tool command	Diagnostic tool title
AC004	Turbocharging solenoid valve
AC012	Damper valve
AC013	Swirl flap
AC031	Heating element no. 3 relay
AC035	Fuel pressure solenoid valve
AC037	Preheating relay
AC038	Low speed GMV relay
AC039	High speed fan unit
AC063	Heating element no. 1 relay
AC064	Heating element no. 2 relay
AC103	EGR by-pass

GETtheMANUALS.org

PR784 **PR785** **PR786** **PR787** **PR788** **PR789** **PR790** **PR791** **PR792** **PR793**	DF312 RECORD No. 1 DF312 RECORD No. 2 DF312 RECORD No. 3 DF312 RECORD No. 4 DF312 RECORD No. 5 DF312 RECORD No. 6 DF312 RECORD No. 7 DF312 RECORD No. 8 DF312 RECORD No. 9 DF312 RECORD No. 10

NOTES	**Special note:** These parameters must only be interpreted for **DF312 Speed request** if it is present or stored.

These parameters can be used to find out the history of the last ten times the particle filter warning light has come on.

Each parameter from **PR784 to PR793** records the mileage when the particle filter warning light illuminates in association with **DF312 Speed request**.
Each time the particle filter warning light comes on, the vehicle mileage is stored in the following parameter (PR+1).

When all ten parameters have a value other than zero, and the particle filter warning light illuminates again, the mileage information for **PR784 DF312 record no. 1** is cleared and replaced by the new value.

AFTER REPAIR	Repeat the conformity check from the start.

EDC16_V08_PR784/EDC16_V08_PR785/EDC16_V08_PR786/EDC16_V08_PR787/
EDC16_V08_PR788/EDC16_V08_PR789/EDC16_V08_PR790/EDC16_V08_PR791/
EDC16_V08_PR792/EDC16_V08_PR793/EDC16_V10_PR784/EDC16_V10_PR785/
EDC16_V10_PR786/EDC16_V10_PR787/EDC16_V10_PR788/EDC16_V10_PR789/
EDC16_V10_PR790/EDC16_V10_PR791/EDC16_V10_PR792/EDC16_V10_PR793/
EDC16_V14_PR784/EDC16_V14_PR785/EDC16_V14_PR786/EDC16_V14_PR787/
EDC16_V14_PR788/EDC16_V14_PR789/EDC16_V14_PR790/EDC16_V14_PR791/
EDC16_V14_PR792/EDC16_V14_PR793

GETtheMANUALS.org

PR794 **PR795** **PR796** **PR797** **PR798** **PR799** **PR800** **PR801** **PR802** **PR803**	STORED REGENERATION FAILURE NO. 1 STORED REGENERATION FAILURE NO. 2 STORED REGENERATION FAILURE NO. 3 STORED REGENERATION FAILURE NO. 4 STORED REGENERATION FAILURE NO. 5 STORED REGENERATION FAILURE NO. 6 STORED REGENERATION FAILURE NO. 7 STORED REGENERATION FAILURE NO. 8 STORED REGENERATION FAILURE NO. 9 STORED REGENERATION FAILURE NO. 10

NOTES	**Special note:** These parameters must only be interpreted for **DF312 Speed request** if it is present or stored.

These parameters are used so that the history of the last ten failed regenerations when driving is known.

each of these parameters contains the vehicle mileage during a failed particle filter regeneration when driving. each parameter relates to an engine status. The statuses and parameters are recorded simultaneously (for example, **PR797 Stored regeneration failure no. 4 is associated with ET709 Stored engine status no. 4**).

Each new recorded value is saved under the next PR (PR+1).

When all ten parameters have a value other than zero, and a regeneration failure occurs when driving, the mileage information for **PR794 Stored regeneration failure no. 1** is cleared and replaced with the new value.

AFTER REPAIR	Repeat the conformity check from the start.

EDC16_V08_PR794/EDC16_V08_PR795/EDC16_V08_PR796/EDC16_V08_PR797/
EDC16_V08_PR798/EDC16_V08_PR799/EDC16_V08_PR800/EDC16_V08_PR801/
EDC16_V08_PR802/EDC16_V08_PR803/EDC16_V10_PR794/EDC16_V10_PR795/
EDC16_V10_PR796/EDC16_V10_PR797/EDC16_V10_PR798/EDC16_V10_PR799/
EDC16_V10_PR800/EDC16_V10_PR801/EDC16_V10_PR802/EDC16_V10_PR803/
EDC16_V14_PR794/EDC16_V14_PR795/EDC16_V14_PR796/EDC16_V14_PR797/
EDC16_V14_PR798/EDC16_V14_PR799/EDC16_V14_PR800/EDC16_V14_PR801/
EDC16_V14_PR802/EDC16_V14_PR803

GETtheMANUALS.org

PR816 **PR817** **PR818** **PR819** **PR820** **PR821** **PR822** **PR823** **PR824** **PR825**	STORED REGENERATION START NO. 1 STORED REGENERATION START NO. 2 STORED REGENERATION START NO. 3 STORED REGENERATION START NO. 4 STORED REGENERATION START NO. 5 STORED REGENERATION START NO. 6 STORED REGENERATION START NO. 7 STORED REGENERATION START NO. 8 STORED REGENERATION START NO. 9 STORED REGENERATION START NO. 10

NOTES	**Special note:** These parameters are to be interpreted only for **ALP 8 Particle filter warning light comes on too frequently**.

These parameters are used so that the history of the last ten regeneration starts when driving can be found.

Each parameter between **PR816** and **PR825** contains the vehicle mileage when particle filter regeneration starts when driving. Each parameter is associated with a status for "Stored regeneration request status". They are recorded simultaneously (for example **PR819 Stored regeneration start no. 4 is associated with ET745 Stored regeneration request status no. 4**).

Each new recorded value is saved under the next PR (PR+1).
When all ten parameters have a value other than zero, and a new regeneration starts when driving, the mileage information for **PR816 Stored regeneration start no. 1** is cleared and replaced by the new value.

AFTER REPAIR	Repeat the conformity check from the start.

EDC16_V08_PR816/EDC16_V08_PR817/EDC16_V08_PR818/EDC16_V08_PR819/
EDC16_V08_PR820/EDC16_V08_PR821/EDC16_V08_PR822/EDC16_V08_PR823/
EDC16_V08_PR824/EDC16_V08_PR825/EDC16_V10_PR816/EDC16_V10_PR817/
EDC16_V10_PR818/EDC16_V10_PR819/EDC16_V10_PR820/EDC16_V10_PR821/
EDC16_V10_PR822/EDC16_V10_PR823/EDC16_V10_PR824/EDC16_V10_PR825/
EDC16_V14_PR816/EDC16_V14_PR817/EDC16_V14_PR818/EDC16_V14_PR819/
EDC16_V14_PR820/EDC16_V14_PR821/EDC16_V14_PR822/EDC16_V14_PR823/
EDC16_V14_PR824/EDC16_V14_PR825

GETtheMANUALS.org

PR1012	WEIGHT OF SOOT AFTER REGENERATION

PARAMETER DEFINITION	This parameter indicates the weight of soot in g present in the particle filter after a regeneration.

NOTES	This parameter is to be consulted after using **SC017 Particle filter regeneration**.

Conformity check: Engine stopped and the ignition on, or the engine running and the engine coolant temperature > 80°C without electrical consumers

If **PR1012** is less than **15 g**, the particle filter regeneration completed correctly.
If **PR1012** is greater than **15 g**, a second particle filter regeneration must be performed using command **SC017 Particle filter regeneration**.

IMPORTANT:
Before performing a second After-Sales regeneration of the particle filter, the engine must be allowed to cool down for 2 hours with the bonnet open.
Do not perform a routine oil change before a second After-Sales regeneration (see **SC017 Particle filter regeneration**).

AFTER REPAIR	Repeat the conformity check from the start.

GETtheMANUALS.org

SC001	WRITE SAVED DATA

NOTES	All data must be saved with command **SC003 Save computer data** for this command to be run. Writing is carried out after the computer has been reprogrammed or replaced.

Validating this command writes the data saved using command **SC003 Save computer data**.
The data is as follows:
– vehicle-specific idling,
– options available on the vehicle and managed by the computer (example: air conditioning).
– injector calibration codes (if the vehicle is fitted with IMA),
– programming of exhaust gas recirculation valve data,
– the information required for the correct operation and maintenance of the particle filter.
they will configure the computer and will enable it to avoid:
– engine malfunction after reprogramming or replacing the computer,
– faulty interpretation of information provided by the clip tool.

GETtheMANUALS.org

SC002	ENTER INJECTOR CODES

NOTES	This command is run after replacing the injectors and only if the vehicle is IMA configured (**ET104 Injector code operation is YES**). If this command is not carried out, fault **DF276 Injector code programming** will be present.

WARNING
The letters **J and Q**, and figures **0 and 9** are **not used in IMA coding**.
If these characters are used the entry will be **invalid**.
Cylinder no. 1 is the cylinder located **at the engine flywheel end**.
Procedure to be followed:
– Read the **6-character** alphanumeric codes etched on the upper section of the injector bodies.
– Use command **SC002**.
– Select the cylinder number for the cylinder concerned in the **Desired**, column, then confirm.
– Enter the injector code noted for the cylinder.
– Enter the new codes for each cylinder, then confirm.
– When the command is completed, the modified codes appear in the **Current** column.
– Check that the codes correspond to those read earlier.
– If the codes entered appear in neither the **Current** column nor the **Desired** column, check the codes read and make sure the data has been entered correctly,
The possible confusions are:
figure 1 with letter I and L
figure 2 for the letter Z
figure 5 with the letter S
figure 6 for the letter G
figure 8 with the letter B
– Exit fault finding mode.
– Switch off the ignition and **wait** for the message to appear on the **diagnostic tool: "Loss of dialogue with the computer: EDC16 C3, check the tool connection and the computer supply"**.
– Switch the ignition back on and check for faults.
– **DF276 Injector code programming** should be stored.

If fault **DF276** is still present, the command has not been performed correctly.
Start the procedure again and follow the instructions.
If the codes are still not accepted, check that the computer has been put on standby correctly:
Switch off the ignition and **wait** for the message to appear on the **diagnostic tool: "Loss of dialogue with the computer: EDC16 C3, check the tool connection and the computer supply"**.
If the warning light flashes when the ignition is switched off, the computer has not been put on standby and the command will be ignored.
If all these checks still do not enable the command to be confirmed, contact the Techline.

* Computer on standby after switching the ignition off: approximately 1 minute.

GETtheMANUALS.org

SC003	SAVE COMPUTER DATA

NOTES	The data is saved before computer reprogramming or the computer is replaced.

On the CLIP tool, select the **SC003 Save computer data**.
If the following message appears:
"a saved file exists, do you want to overwrite this data?":
(this file corresponds to the last save carried out on the tool) select **YES**
Confirming this command saves the following vehicle-specific data:
– injector codes,
– the egr valve data programming;
– options available on the vehicle and managed by the computer (e.g.. air conditioning);
– specific data related to the operation of the particle filter.
This information will be saved in the CLIP tool.
When saving is finished, use command **SC001 Write saved data** in order to configure the new computer after programming or reprogramming.

GETtheMANUALS.org

SC017	PARTICLE FILTER REGENERATION

NOTES	Only run this command after interpreting the following faults: – **DF308 Clogged particle filter** – **DF311 Failed regenerations limit exceeded** – **DF312 Speed request**

WARNING
– **It is essential to observe the health and safety regulations (see Technical Note 5040A).**

SAFETY INSTRUCTIONS TO BE FOLLOWED:
The regeneration causes exhaust fumes and high temperatures.
The vehicle must be outside during regeneration.
If it is not possible to carry out regeneration outside, use an extractor fan which can withstand very high regeneration temperatures (**400°C at the exhaust outlet**).
Perform regeneration on a surface free from fire risks (oil, dry leaves, etc.). Nothing should be left in the vicinity of the exhaust pipe. Check that there are no leaks or blockages in the exhaust pipe. Repair if necessary.

IMPORTANT
– **Check the engine oil level before running the command to avoid any engine racing. The oil level must be between the minimum threshold and the middle level on the oil dipstick.**
– **Before performing a particle filter regeneration, it is essential to deactivate the air conditioning compressor (risk of engine damage) and all the electrical consumers.**

IF NECESSARY:
Regeneration can be stopped by briefly pressing the vehicle start button twice (less than **3 seconds**).
Switch off the ignition and wait for the message to appear on the diagnostic tool (maximum time **8 minutes**) **"Communication lost with computer: EDC16 C3, check the tool connection and the computer supply"** before switching the ignition back on.

PROCEDURE TO BE FOLLOWED:
To run this command, select the command mode on the diagnostic tool and select command **SC017 Particle filter regeneration**.

When regeneration is complete, a message will indicate whether the regeneration was successful, and which operations need to be carried out **(filter replacement, whether an oil service is required, etc.).**

GETtheMANUALS.org

SC017 CONTINUED 1	

DESCRIPTION OF THE PROCESS
Particle filter regeneration takes place in 3 stages (values given as a guide only):
– **Heating phase**: the engine speed is fixed or varies between **1000 rpm and 1650 rpm**.
This phase lasts at least **3 minutes**, until the coolant temperature exceeds **80°C**.
– **Regeneration phase**: the engine speed is fixed or varies between **1000 rpm and 1650 rpm**. Engine injection is retarded. The exhaust fumes rise in temperature and burn the soot retained in the particle filter. Then the combustion of the soot stored in the particle filter causes the **particle filter upstream temperature** to increase, possibly reaching **700°C** depending on the amount of soot in the filter. This phase lasts between **20 and 25 minutes**.
– **Cooling phase:** the engine speed decreases and varies between **1000 rpm and 1650 rpm**, then increases to **1750 rpm**. Engine injection returns to normal and the exhaust gases cool the particle filter. This phase lasts **3 minutes**. The engine speed returns to idle speed or remains fixed at **1500 rpm**

The procedure lasts at least **30 minutes**, and varies depending on the time taken to reach a coolant temperature of **80°C**.

CONFIRMING THE REGENERATION PROCESS:
At the end of regeneration, a message appears to announce whether the regeneration was successful:
● **Particle filter regeneration finished:**
Consult **PR1012 Weight of soot after regeneration**. If **PR1012** is less than **15 g**, the particle filter regeneration completed correctly. If **PR1012** is greater than **15 g**, a second particle filter regeneration must be performed using the command in **the diagnostic tool** and choose command **SC017**.

IMPORTANT:
Before performing a second After-Sales regeneration of the particle filter, the engine must be allowed to cool down for **2 hours** with the bonnet open.
Do not carry out the usual engine oil change before a second After-Sales regeneration.

● **Particle filter too full - replace the particle filter**: regeneration has failed. The weight of soot in the particle filter is so great that it is creating back-pressure. Deal with any faults that appear or replace the particle filter. Run command **SC036 Reinitialise programming** and select **After particle filter replacement**.

Explain to the customer the procedure for regeneration when driving to avoid unnecessary repairs: see **PART D** in the interpretation of **DF312 Speed request**.

● **Particle filter regeneration failed - run the test Temperature upstream of turbine too low**: the regeneration failed because the temperature upstream of the turbine is too low. Run **test 11 Temperature upstream of turbine too low**.

GETtheMANUALS.org

SC017 **CONTINUED 2**	

In all cases, carry out the following operations:
- switch off the ignition and wait for the message to appear on the **diagnostic tool** (maximum time **8 minutes**): **"Loss of communication with the computer: EDC16 C3, check the tool connection and the computer supply"**.
- switch on the ignition and establish dialogue with the injection computer,
- run command **SC036 Reinitialise programming**,
- depending on the operation performed, select **After particle filter regeneration with diag tool**, or **After particle filter replacement**
- switch off the ignition and wait for the message to appear on the **diagnostic tool** (maximum time **8 minutes**): **"Loss of communication with the computer: EDC16 C3, check the tool connection and the computer supply"**.
- **Then switch on the ignition again** and **clear** the **present** or **stored** faults from the computer memory **(operation to be carried out within 3 minutes of switching on the ignition)**.

If **DF308 Particle filter clogged** or **DF312 Speed request** is still present, contact Techline.

Note:
It is essential to change the **engine oil** and the **oil filter** in the following cases:
- following an After-Sales regeneration only if a message on the **CLIP diagnostic tool** requests it,
- following particle filter replacement,

after a second regeneration (when two successive regenerations).

GETtheMANUALS.org

SC036	REINITIALISE PROGRAMMING

NOTES	This command is used to reset the computer parameters according to the type of operation or component repaired or replaced from the following list: – the EGR valve, – the damper valve, – after particle filter replacement, – after particle filter regeneration with the **CLIP diagnostic tool**, – after replacing the injection computer without the possibility of saving. **Ignition on and engine stopped.**

To run this command, in the **CLIP diagnostic tool**, select scenario **SC036 Reinitialise programming**.
Procedure to be followed:
– on the main screen, select the component to reinitialise after an operation (removal/refitting, regeneration or replacement of component),
– select **YES** then **OK** to begin reinitialisation,
– select **Finish** on the **Configuration done** screen to return to the main screen,
– end of operation.

GETtheMANUALS.org

RZ005	PROGRAMMING

NOTES	This command is only executed after replacing the computer.

Command **RZ005** reconfigures the computer.
If the computer does not have any configuration data, use command **RZ005** to enter the vehicle options:
– air conditioning,
– thermoplunger,
– cruise control.
These options are detected by the computer even if command **RZ005** is not used.
The computer is configured as soon as the one of the vehicle's optional system components is operated.

GETtheMANUALS.org

AC004	TURBOCHARGING SOLENOID VALVE

NOTES	This command is run if a fault is detected in the turbocharging circuit.

This command checks that the turbocharger and the control circuit are working properly.

Introduction

1-Check the sealing of the high pressure air circuit:
Pipes not joined or pierced, pressure sensor disconnected or poorly fitted (seal present), intercooler pierced. To test the intercooler: stabilise the engine speed between **3,500** and **4,000 rpm** with the vehicle stopped and check that there are no leaks.
Check the resistance of the turbocharging limitation solenoid valve between **tracks 1 and 2**.
Replace the solenoid valve if its resistance is not **15.4 Ω ± 0.7 at 20°C**.
Check the injection computer connections.
Check for **continuity and make sure there is no interference resistance** on the following connection:
Injection computer grey 32-track connector **C track E1** ⟶ **Track 1** turbocharging solenoid valve
Repair if necessary.
Check for the presence of **+ 12 V** after relay on **track 2** of the turbocharging solenoid valve.

2 - Turbocharger control circuit check
- With the engine switched off, make sure the control rod is in the rest position,
- Start the engine and make sure that the control rod operates to the upper stop.
- (when the engine is switched off, the control rod should return to the rest position)
- If the control rod movements do not conform, carry out the following checks:

1) Vacuum pressure control check:
- Disconnect the solenoid valve inlet **hose** and connect it to a pressure gauge,
- Start the engine and stabilise it at idle speed,
- If the vacuum pressure does not reach **800 mbar ± 100**: check the vacuum pressure circuit from the vacuum pump.
- Stop the engine, reconnect the inlet hoses and go to step no. 2.

2) Solenoid valve control check:
- Disconnect the solenoid valve outlet **hoses**,
- Start the engine and stabilise it at idle speed,
- Place your hand on the solenoid valve and block the **outlet** union with your thumb,
- If you notice no solenoid valve vibration, check the operation of the computer output (**step 5**)

3) Solenoid valve operation check:
- Attach the pressure gauge to the **outlet** union of the solenoid valve,
- Start the engine and stabilise it at idle speed,

If the vacuum pressure does not reach **800 mbar ± 100**, replace the solenoid valve.

GETtheMANUALS.org

AC004 **CONTINUED**	

Turbocharger control circuit check (continued)

4) Turbocharger operation check:
a) Attach a vacuum pump to the **Hose** connected to the turbocharger control diaphragm,
Apply a vacuum of **800 ± 100 mbar**:
If there is a leak, replace the turbocharger (diaphragm included).
b) Check the movement and adjustment of the control rod (See **12B, turbocharging**).
If the control rod is sticking, replace the turbocharger.
c) Engine cold and stopped:
Remove the turbocharger inlet duct and check that the compressor turns freely on the axis.
d) If the fault is still present:
Check that the exhaust manifold is not leaking.
Check that the exhaust is not blocked.
Carry out the necessary repairs.
5) Computer output stage check (solenoid valve connected): This operation **can only be carried out if** the checks indicated in **step** no. 2 **are not conclusive**.
Either with the voltmeter: connect the voltmeter earth lead to **track 2** of the solenoid valve and the positive cable to **track 1**,
Clear any solenoid valve fault then run command **AC004:**
➡ The voltmeter should display **ten cycles** of two successive voltages ~ = battery voltage X current OCR*.
either: **~ 2.5 V** (OCR for **20%**) then **~ 8.7 V** (OCR for **70%**).
Or with the oscilloscope (at 5 V/division range and time base 1 ms/division): Connect the oscilloscope earth lead to the battery earth and the positive test pin to **track 2** of the solenoid valve,
Clear any solenoid valve faults, then run command **AC004**:
➡ the oscilloscope should display a square-wave signal of 12.5 volts amplitude at a frequency of 140 Hz (with an OCR going successively from ~20 à ~70 %).
if the measurement is correct, replace the solenoid valve.
if the measurement does not show any control or continuous voltage, contact the techline.

* Opening cyclic ratio

GETtheMANUALS.org

AC012	DAMPER VALVE

NOTES	Carry out this interpretation: – after fault **DF226 Damper valve**, – or after a customer complaint (starting faults, poor performance). Ignition on and engine stopped.

Check the **continuity, the insulation, and the absence of interference resistance** on the following connection:

Vehicle earth, **track 1** ⟶ **track 1** damper valve solenoid valve connector

+12 V after relay feed ⟶ **track 2** damper valve solenoid valve connector

Repair if necessary.

Check for **+12 V** on **track 2** of the damper valve solenoid valve connector.
Repair if necessary.

Check for **earth** on **track 1** of the damper valve solenoid valve connector. Repair if necessary.

Check that the **damper valve** is **open**.
If not, clean or replace the air vent unit.

Actuate the valve using command **AC012** and check the damper valve travel and rest position of the valve.
Check the operation of the computer output stage with a voltmeter:
Actuate the valve with command **AC012**.
If the solenoid valve opens (vacuum pump pressure gauge returns to atmospheric pressure), go to **step C**.

If not, with the solenoid valve connected, check the operation of the computer output stage using a voltmeter:

Negative lead of voltmeter ⟶ **track 1** of the damper valve solenoid valve

Positive lead of voltmeter ⟶ **track 2** of the damper valve solenoid valve

The voltmeter should display three **ON-OFF** cycles (**12.5 V** then return to **0 V**).
If the measurement is correct, replace the damper valve.
If the measurement does not show any operation, **contact the Techline**.

GETtheMANUALS.org

AC031	THERMOPLUNGER No. 3 RELAY (check that the computer is correctly configured)

NOTES	**No faults should be present or stored.** Perform this fault finding procedure if there is a fault in the **command** menu, or a passenger compartment heating/demisting fault. Refer to the **wiring diagrams** in the Technical Note for your vehicle to locate the relevant fuses and relays.

If the additional heater no. 3 **relay is not operating** during command **AC031**:
Check the **additional heater no. 3** relay mounting.
check the engine management computer connections.
Repair if necessary.

If the fault is still present, check that the relay is being controlled by the engine management computer as follows:
Disconnect the **additional heater no. 3 relay**, fit a resistor of **50 to 100** Ω on the mounting in place of the coil, and connect a voltmeter as follows:
Positive terminal to **+ 12 V** battery feed
Negative terminal to **track 2** of the **additional heater no. 3** relay mounting.
Clear the fault and actuate the relay using command **AC031**.
if the voltmeter shows the battery voltage (two **2-second** on-off cycles), replace the additional heater no. 3 relay.
If the voltmeter does not show the battery voltage (two **2-second** ON-OFF cycles), contact the Techline.

If the additional heater no. 3 **relay is fed** by command **AC031**, but there is still a fault with the passenger compartment heating and demisting, check, using a wiring diagram:
the conformity of the thermoplunger maxi-fuse, the presence of the **+ 12 V battery** on **track 3** of the additional heater no. 3 relay mounting,
the conformity of the additional heater no. 3 relay.
The continuity between **track 5** of the **additional heater no. 3** relay mounting and the supply terminal for thermoplunger 3.
the conformity of the thermoplunger resistance: **0.45 ± 0.05** Ω **at 20°C**,
the presence of earth at the water chamber (thermoplunger mounting).
Also check the level of the cooling circuit and that there are no leaks.
Carry out the necessary repairs.

GETtheMANUALS.org

AC035	FUEL PRESSURE SOLENOID VALVE

NOTES	This command enables the operation of the pressure regulator and the high-pressure injection circuit to be checked.

Step 1

Measure the pressure regulator resistance between **tracks 1** and **2**.
– Replace the regulator if its resistance is not approximately: **3 Ω ± 0.5 at 20°C**.
Check **the continuity and absence of interference resistance** of the following connections:
Injection computer, connector **B**
brown 48-track, track **M4** ⟶ **track 2** of the rail pressure regulator connector.
+ **12 V** after relay feed ⟶ **track 1** of the rail pressure regulator connector.
If, when running command **AC035**, you can hear a slight whistling noise and a crunching noise from the pressure regulator, go to **step 2**. Otherwise, ensure that the computer output stage is functioning correctly:

● **Using a voltmeter:**
With the solenoid valve connected, connect the voltmeter earth lead to **track 2** of the fuel pressure solenoid valve and the positive cable to **track 1**. Clear any fuel pressure solenoid valve faults, then run command **AC035**:

➡ The voltmeter should display two successive voltages: ~ 2.5 V for an OCR at 20 % then~ 8.75 V at an OCR at 70 % (ten cycles)

● **Or using an oscilloscope** (range 5 V/division and with time base 1 ms/division):
With the solenoid valve connected, connect the oscilloscope earth to the battery earth and the positive test pin to **track 2** of the fuel pressure solenoid valve; clear any fuel pressure solenoid valve faults then enter command **AC035**:

➡ The oscilloscope should display a square wave signal of 12.5 V in amplitude at a frequency of 185 Hz (with an OCR* passing successively from 20 to 70%).
if the measurement is correct, replace the regulator.
If the measurement is not correct, contact the Techline.

Step 2

-Next page-

* Opening cyclic ratio

GETtheMANUALS.org

AC035 **CONTINUED**	

Step 2

In the event of rail overpressure, check the operation of the injectors (see **Component testing** section, **Test 10 Poor injector operation**).
Check the operation of the rail pressure sensor (see Interpretation of faults **DF007 Rail pressure sensor circuit**). if these checks do not reveal any faults, and if the fault is still present, replace the rail pressure sensor.

in the event of rail underpressure:
Check that the rail pressure sensor is operating correctly:
Fault interpretation **DF007 Rail pressure sensor circuit**.
Check the low pressure diesel circuit priming.
Check the conformity of the diesel filter connections.
Check the condition of the filter (clogging and water saturation).
Check there are no air bubbles between the filter and the high pressure pump.
Check the low and high pressure diesel circuits sealing (visual checks, odour, etc.): pump casing, overpressure valve, pipes, rail and injector unions, injector wells, etc.).
Check the conformity of the seal fitting on the pressure regulator.
Check the operation of the injectors (see **Component testing, Test 10 Poor injector operation**).
Carry out the necessary repairs.

GETtheMANUALS.org

AC037	PREHEATING RELAY

NOTES	This command is only carried out if the fault **DF017 Heater plugs unit control circuit**, or **DF025 Preheating unit fault finding connection** is present or stored and if no other fault is present. Refer to the **Wiring diagrams** Technical Note for your vehicle to locate the relevant fuses and relays

Before applying the following fault finding procedure, check that the battery voltage is not below 12 V.

Step 1:

Using a multimeter fitted with an Amps clamp, group together the 4 supply wires for the heater plugs.
Actuate the preheating relay using the **AC037** command and measure the current used by the 4 heater plugs.
If the current drawn is not between **60 and 80A**, go to step 2, otherwise end fault finding.

Step 2:

Check the connections on the preheating unit, heater plugs and injection computer.
Repair if necessary.
Measure the resistance of the heater plugs. If this resistance is greater than **2** Ω replace the faulty plug(s).
Check the continuity and for the absence of interference resistance between:

- preheating unit **track 1** → heater plug of cylinder **3**
- preheating unit **track 2** → heater plug of cylinder **4**
- preheating unit **track 6** → heater plug of cylinder **1**
- preheating unit **track 7** → heater plug of cylinder **2**

Check the condition of the preheating unit supply fuse **F01 (70A)**. Replace it if necessary.
Then check for the **+ 12 V feed** on track **3** of the preheating relay connector.
Check the continuity and for the absence of interference resistance between:

- Injection computer connector **B track B3** → **track 9** of the preheating unit connector
- Injection computer connector **B track C3** → **track 8** of the preheating unit connector

If the fault is still present, replace the pre-postheating unit.

GETtheMANUALS.org

AC038	LOW-SPEED FAN ASSEMBLY RELAY

NOTES	**No faults should be present or stored.** Perform this fault finding procedure if a malfunction appears on the **command** menu or after an engine cooling system or air conditioning fault. Refer to the **wiring diagrams** in the Technical Note for your vehicle to locate the relevant fuses and relays.

If, when running command **AC038, the low speed fan unit relay does not work**:
Check the **low-speed fan unit** relay mounting and the connections of the engine management computer.
Repair if necessary.

If the fault is still present, check that the relay is actuated by the engine management computer as follows:
Disconnect the **low-speed fan assembly** relay, fit a **50 to 100** Ω resistor on the relay mounting in place of the coil, and connect a voltmeter as follows:
Positive terminal to **+ 12 V** battery feed
Negative terminal to **track 2** of the **low-speed fan assembly relay** mounting.
Clear the fault and run command **AC038**
If the voltmeter indicates the battery voltage (three **2-second** ON-OFF cycles), replace the relay.
If the voltmeter does not show the battery voltage (three **2 second** ON-OFF cycles), contact the techline.

If the low-speed fan assembly relay operates using command **AC038**, but there is still a fault with triggering the fan assembly, use the wiring diagram to check:
the conformity of the fan assembly maxi-fuse.
the conformity of the **low-speed fan unit** relay,
the continuity of the connection between **track 5** of the **low-speed fan assembly** relay mounting and **track 1** of the low-speed resistor,
the conformity of the low-speed resistance (resistor and connections),
the continuity of the connection between **track 2** of the low-speed resistor connector and **track 1** of the fan assembly connector,
the conformity of the fan assembly and the continuity between **track 2** and earth.
Carry out the necessary repairs.

GETtheMANUALS.org

AC039	HIGH SPEED FAN ASSEMBLY

NOTES	**No faults should be present or stored.** Perform this fault finding procedure after detecting a fault in the commands menu or following a problem of engine cooling. Refer to the **wiring diagrams** in the Technical Note for your vehicle to locate the relevant fuses and relays.

If, when running command **AC039 High-speed fan assembly relay does not operate**:
Perform a check on the **high speed fan assembly** relay mounting and the connections of the engine management computer.
Repair if necessary.

If the fault is still present, check that the relay is being controlled by the engine management computer as follows:
Disconnect the **high speed fan assembly** relay, fit a **50 to 100** Ω resistor on the mounting in place of the coil, and connect a voltmeter as follows:
Positive terminal to **+ 12 V** battery feed
Negative terminal to **track 2** of the **high-speed fan assembly** relay mounting.
Clear the fault and run command **AC039**.
If the voltmeter indicates the battery voltage (three **2-second** ON-OFF cycles), replace the relay.
If the voltmeter does not show the battery voltage (three **2 second** ON-OFF cycles), contact the techline.

If the **high-speed fan assembly** relay is supplied by command **AC039**, but there remains a fault with the triggering the fan assembly. Check using the wiring diagram:
the conformity of the fan assembly maxi-fuse.
for the + battery feed on **track 3** of the **high-speed fan assembly** relay mounting,
the conformity of the **high-speed fan assembly** relay,
the continuity of the connection between **track 5** of the **high-speed fan assembly** relay mounting and **track 1** of the fan assembly connector,
the conformity of the fan assembly,
the continuity of the connection between **track 2** of the fan unit connector and earth.
Carry out the necessary repairs.

GETtheMANUALS.org

AC063	THERMOPLUNGER No. 1 RELAY (check that the computer is correctly configured)

NOTES	**No faults should be present or stored.** Perform this fault finding procedure if there is a fault in the **command** menu, or a passenger compartment heating/demisting problem. Refer to the **wiring diagrams** in the Technical Note for your vehicle to locate the relevant fuses and relays.

If the **additional heater 1 relay does not work** when running command **AC063**:
Check the **additional heater 1** relay mounting.
Check the engine management computer connectors.
Repair if necessary.

if the fault is still present, check as follows that this relay is controlled by the engine management computer:
Disconnect the **additional heater no. 1** relay, fit a **50 to 100** Ω resistor on the mounting in place of the coil, and connect a voltmeter as follows:
Positive terminal to **+ 12 V** battery feed
Negative terminal to **track 2** of the **additional heater no. 1** relay mounting.
Clear the fault and actuate the relay using command **AC063**.
If the voltmeter shows the battery voltage (two 2-second ON-OFF **cycles**), replace the additional heater relay 1.
If the voltmeter does not show the battery voltage (two **2-second** ON-OFF cycles), contact the Techline.

If the **additional heater 1** relay is fed by command **AC063**, but there is still a fault with the passenger compartment heating and demisting, check using a wiring diagram:
the conformity of the thermoplunger maxi-fuse,
the presence of the **+12 V battery feed** on **track 3** of the **additional heater 1** relay mounting,
the conformity of the additional heater 1 relay,
the continuity between **track 5** of the "additional heater relay **1**" relay mounting and the supply terminal for thermoplunger 1.
the conformity of the thermoplunger resistance: **0.45 ± 0.05** Ω **at 20°C**,
the presence of earth at the water chamber (thermoplunger mounting).
Also check the level of the cooling circuit and that there are no leaks.
Carry out the necessary repairs.

GETtheMANUALS.org

AC064	THERMOPLUNGER No. 2 RELAY (check that the computer is correctly configured)

NOTES	**No faults should be present or stored.** Perform this fault finding procedure if there is a fault in the **command** menu, or a passenger compartment heating/demisting problem. Refer to the **wiring diagrams** in the Technical Note for your vehicle to locate the relevant fuses and relays.

If the additional heater relay 2 does not operate when running command **AC064**:
Check the **additional heating 2** relay mounting.
check the engine management computer connections.
Repair if necessary.

if the fault is still present, check as follows that this relay is controlled by the engine management computer:
Disconnect the **additional heater no. 2 relay**, and fit a **50 to 100** Ω resistor on the mounting in place of the coil and connect a voltmeter as follows:
Positive terminal to **+ 12 V** battery feed
Negative terminal to **track 2** of the **additional heater no. 2** relay mounting.
Clear the fault and actuate the relay using command **AC064**.
If the voltmeter shows the battery voltage (two 2-second ON-OFF **cycles**), replace the additional heater relay 1.
If the voltmeter does not show the battery voltage (two **2-second** ON-OFF cycles), contact the Techline.

If the **additional heater 2** relay is fed by command **AC064**, but there is still a fault with the passenger compartment heating and demisting, check, using a wiring diagram:
the conformity of the thermoplunger maxi-fuse,
the presence of the **+ 12 volts battery feed** on **track 3** of the **additional heater no. 2** relay mounting,
the conformity of the additional heater relay no. 2.
The continuity between **track 5** of the mounting for the **additional heater no. 2** relay and the supply terminal for thermoplunger **2,**
the conformity of the thermoplunger resistance: **0.45 ± 0.05** Ω **at 20°C**,
the presence of earth at the water chamber (thermoplunger mounting).
Also check the level of the cooling circuit and that there are no leaks.
Carry out the necessary repairs.

GETtheMANUALS.org

AC103	EGR BY-PASS

NOTES	This command is only carried out if a fault linked to the exhaust gas recirculation is present or stored.

This command allows the EGR by-pass solenoid valve function to be checked. Run command **AC103**.
The solenoid valve must actuated for 10 cycles.
Put your hand on the body of the solenoid valve to check its movement.
If no movement is detected:
Check the continuity and absence of interference resistance of the following connections:

Engine management computer connector **B track L3** ⟶ **track 1** of the solenoid valve
+12 V after relay feed ⟶ **track 2** of the solenoid valve

Repair if necessary.

Measure the resistance **between terminals 1 and 2 of the solenoid valve**.
Replace the solenoid valve if its resistance is not between **43 and 49** Ω.

GETtheMANUALS.org

VP036	INHIBIT FUEL SUPPLY

NOTES	This command restores fuel supply to the injectors. This command is carried out with the engine switched off, and ignition on.

This command allows the injectors to be locked, so that starting is not possible.
Command **VP036** enables you to test the engine compression safely.
Run command **VP036**, and try to start the vehicle.
If the vehicle does not start, check the engine compression and reestablish the injector actuation using command **VP037 Lift fuel supply inhibition**.

GETtheMANUALS.org

VP037	CANCEL FUEL SUPPLY INHIBITION

NOTES	This command restores fuel supply to the injectors. This command is carried out with the engine switched off, and ignition on.

The command allows the supply to the injectors to be re-established, following an engine compression test.
Run command **VP037**, and try to start the vehicle.
If the vehicle does not start, start the procedure again.

GETtheMANUALS.org

NO COMMUNICATION WITH THE COMPUTER	→ ALP1
STARTING DIFFICULT OR IMPOSSIBLE	→ ALP2
INJECTION NOISE	→ ALP3
POOR PERFORMANCE	→ ALP4
IRREGULAR ENGINE OPERATION	→ ALP5
ROUGH IDLE	→ ALP7
PARTICLE FILTER WARNING LIGHT COMES ON TOO OFTEN	→ ALP8

GETtheMANUALS.org

ALP1	No dialogue with engine management computer

NOTES	**Before dealing with this customer complaint, check that there are no faults, and the conformity (or otherwise) of the parameters and statuses using the diagnostic tool.** **If the customer complaint is not eliminated, perform the following checks.**

Check the conformity of the vehicle type and the domain selected on your tool!
Check that the tool is not faulty by trying to establish dialogue with a computer on another vehicle.
Check the condition of the main relay supply fuse **M3 30A**.
Replace it if necessary.
Remove the relay **R8** and check it is working correctly.
If this relay is defective, replace and retry to establish communication.
Check the continuity and absence of interference resistance on the following connection:
Injection computer **48-track** connector **B, Track E1** ⟶ Relay mounting **R8 track 15**
Check the supply to the diagnostic socket:
+ Before ignition feed on **track 16**/ + After ignition feed on **track 1**/ Earth on **tracks 4 and 5**
Check (according to wiring diagram and equipment):
the conformity of the + After ignition fuse.
the conformity of the injection relay mounting feeds,
the conformity of the injection relay: **65 Ω ± 5 Ω** between **tracks 1** and **2**
infinite resistance between **tracks 3** and **5** (open contact)
resistance **< 0.2** between **tracks 3** and **5** (closed contact)
Disconnect the engine management computer and check that there are no conducting parts on the computer studs. If this reveals any kind of impurity, rectify it and try to establish dialogue.
If the fault is still present:
Check **the continuity and absence of interference resistance** on the following connections:
Engine management computer, **connector A track B4** ⟶ Diagnostic socket **track 7 (line K)**
Ensure that the power supplies are in order:
Engine management computer, **connector A track D1** ⟶ **+ After ignition feed**
Engine management computer, **connector B tracks L3, L4, and M4** ⟶ **Earth**
By shunting the normally open injection relay contact, i.e. **tracks 3** and **5** of the relay mounting:
Engine management computer, **connector B tracks M3 and M2** ⟶ **+12 V battery feed** (via test shunt)
Check the continuity of the connection between:
Engine management computer, **connector B track E1** ⟶ **track 2** of the central injection unit supply relay mounting

AFTER REPAIR	Carry out a road test followed by a complete check with the diagnostic tool.

GETtheMANUALS.org

ALP1 CONTINUED	

Try to start communication with another computer on the same vehicle.

- ➡ If dialogue is established with **another computer on the same vehicle**, contact the Techline.
- ➡ If you cannot communicate with **another computer on the same vehicle**, it may be that a faulty computer is causing interference with the multiplex network.

To locate it, proceed by elimination, disconnecting all the computers linked to the multiplex network one by one (according to the wiring diagram and the equipment): air conditioning, airbag, ABS system, UCH, instrument panel. try to establish a dialogue between each disconnection:

If, after a disconnection, you manage to establish dialogue, perform the fault finding procedure for the computer concerned.

- ➡ If the fault is still present, reconnect the computers listed above and disconnect the engine management computer. try to establish dialogue with another computer.
- ➡ If you manage to establish dialogue, go to **step 2.**
- ➡ If you still cannot establish dialogue, disconnect **all** the computers connected to lines **K and/or L** and check the insulation against **+ 12 V** and against earth on **track 7** and **track 15** of the **diagnostic socket**. Carry out the necessary repairs.

If the fault is still present, contact the techline.

AFTER REPAIR	Carry out a road test followed by a complete check with the diagnostic tool.

GETtheMANUALS.org

ALP2	Starting faults (or starting impossible)

NOTES	**Before dealing with this customer complaint, check that there are no faults, and the conformity (or otherwise) of the parameters and statuses using the diagnostic tool.** **If the customer complaint is not eliminated, perform the following checks.**

impossible

A ← **Is it difficult or impossible to start the engine?**

difficult ↓

Check the engine earths.
Make sure that the engine speed reaches **250 rpm** when the starter motor is operated, displayed in the parameter screen,
check the conformity of the fuel used by running **test 7 Diesel fuel conformity check**,
check the conformity of the fuel filter connections,
ensure that the fuel filter is not saturated with water.
check there are no air bubbles between the filter and the high pressure pump,
check the operation of the heater plugs and unit with command **AC037 Preheating relay**,
check the condition of the air filter (clogging),
check the sealing of the high pressure diesel fuel circuit; pump, pipes, unions (visual inspection + odours),
check the position of the EGR valve: jamming or mechanical seizure.
check the consistency of the signal from the engine coolant temperature sensor,
check the operation of the pressure regulator (refer to interpretation of the command **AC035 Fuel pressure solenoid valve**,
check the operation of the injectors (too much return leakage, clogging, seizing) consult Test 10 (see component test, Test 10 Poor injector operation),
check that the compressions are balanced in accordance with the power consumption in the starting phase (Compression test MENU on the CLIP tool).
In the event of an imbalance, use a compression gauge to complete the measurements.
after the operation, clear the faults caused by disconnecting the regulator and the heater plugs.

AFTER REPAIR	Carry out a road test followed by a complete check with the **diagnostic tool**.

GETtheMANUALS.org

ALP2 CONTINUED 1	

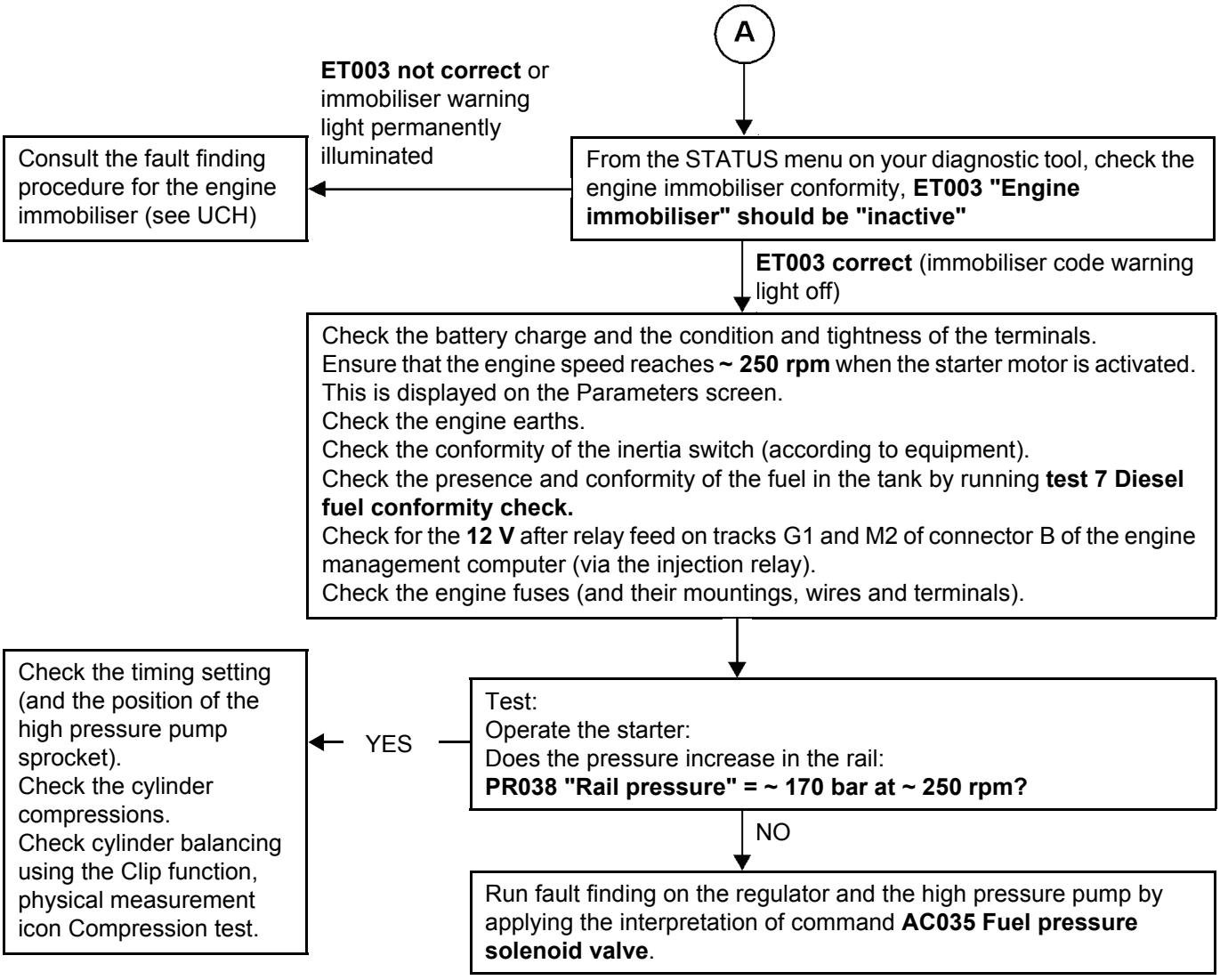

AFTER REPAIR	Carry out a road test followed by a complete check with the diagnostic tool.

GETtheMANUALS.org

ALP3	Injection noise

NOTES	**Before dealing with this customer complaint, check that there are no faults, and the conformity (or otherwise) of the parameters and statuses using the diagnostic tool.** **If the customer complaint is not ironed out, perform the following checks:**

If the injection noise occurs after starting from cold:
Check the low pressure diesel circuit priming.
Check the fuel heater supply.
Check the operation of the preheating system.
Check that fuel and engine temperatures are consistent.
If the complaint is still present, check the rail pressure (**PR038**) and apply interpretation of command **AC035 Fuel pressure solenoid valve.**.

If the injection noise occurs at idle speed:
Check the condition of the injector connector and pressure regulator terminals.
Check the conformity of the air flow signal (refer to parameter **PR132 Air flow**).
Check the condition of the EGR valve (clogging, blocked, seized).
If the complaint is still present, perform a fault finding procedure on the injectors with TEST 10 Poor injector operation.

does the injection noise occur at all engine speeds?
Run fault finding on the injectors (consult Test 10 Poor injector operation).
Check the condition of the injector connector and pressure regulator terminals.
Check the conformity of the fuel by running **test 7 Diesel fuel conformity check**.
Replace the diesel fuel if it does not match and bleed the low and high pressure circuits of diesel fuel.
Check the conformity of the air flow signal (use the interpretation of the fault finding procedure **PR132 Air flow**).
If the customer complaint is still present, check the rail pressure (PARAMETERS MENU) and apply the interpretation of command **AC035 Fuel pressure solenoid valve**.

If the injection noise occurs at transitional speed:
If the engine races when changing gear, check, if there is a floor carpet, whether the floor carpet is blocking the accelerator pedal, then the conformity of the clutch switch and the conformity of the accelerator pedal when released.
When changing gear during a road test, display parameter **PR017 Fuel flow**. If it varies, without notable influence on the rail pressure, apply command interpretation **AC035 Fuel pressure solenoid valve.**
If the complaint is still present, run fault finding on the injectors (consult the ALP for **TEST 10 Poor injector operation**).

AFTER REPAIR	Carry out a road test followed by a complete check with the diagnostic tool.

GETtheMANUALS.org

ALP4	Poor performance

NOTES	**Before dealing with this customer complaint, check that there are no faults, and the conformity (or otherwise) of the parameters and statuses using the diagnostic tool.** **If the customer complaint is not ironed out, perform the following checks:**

IMPORTANT
In the event of the engine overheating above **110°C**, the computer deliberately limits the fuel flow, and supplies the engine fan unit until the battery is completely discharged.

Is the poor performance accompanied by smoke?

NO

YES

Check:
– That the EGR valve is not stuck in the open position.
– That the injectors are properly mounted (presence and conformity of the sealing washer).

YES

Is the engine running on all cylinders?

NO

Check the operation of the injectors (see **TEST 1**).

If the fault is still present

Check conformity on the following components:
– accelerator pedal position sensor,
– brake pedal sensor,
– atmospheric pressure regulator,
– EGR valve.
Check the condition of the air filter,
Check the consistency of the signal:
– from the flow sensor or air temperature/pressure sensor/,
– from the coolant temperature sensor,
– from the fuel temperature sensor,
– from the engine speed sensor,
– from the swirl flap (depending on equipment).
Check there are no foreign bodies on the flow sensor grille (visual inspection only).

AFTER REPAIR	Carry out a road test followed by a complete check with the diagnostic tool.

GETtheMANUALS.org

ALP4 **CONTINUED**	

Check:
– that the diesel filter is not clogged,
– that there are no leaks in the low pressure and high pressure diesel fuel circuits,
– that the air inlet circuit is complete (sealed and not obstructed),
– that the oil vapour rebreathing system is connected,
– the flow regulator (jammed/seized, check the interpretation of command AC035 Fuel pressure solenoid valve,
– the turbo control (jammed/seized, check the interpretation of command AC004 Turbocharging solenoid valve,
– check the cylinder compression (Cylinder compression balance, with the **Compression test** function on the CLIP tool),
– Check that the exhaust pipe is not blocked.

AFTER REPAIR	Carry out a road test followed by a complete check with the diagnostic tool.

GETtheMANUALS.org

ALP5	Irregular engine operation

NOTES	**Before dealing with this customer complaint, check that there are no faults, and the conformity (or otherwise) of the parameters and statuses using the diagnostic tool.** **If the customer complaint is not ironed out, perform the following checks:**

If the engine bucks or races during gear changes, check the conformity of the clutch switch.
If the fault is still present:
Check the conformity of the fuel used by running **test 7 Diesel fuel conformity check**,
- check the priming of the low pressure fuel circuit,
- check the conformity of the low-pressure circuit connections
- check the conformity of the diesel filter and that it is not saturated with water (replace the filter if necessary),
- check that there are no air bubbles between the filter and the high pressure pump,
- check the conformity of the rail pressure (warm engine):
  ± 25 bar around the rail pressure value at idle speed, (the minimum to maximum variations in the rail pressure at idle speed should not exceed **50 bar**).
  ~ 1600 bar with full load on the accelerator.

In the event of an irregularity, apply command interpretation **AC035 Fuel pressure solenoid valve.**
Check the conformity of the air flow, apply the interpretation of parameter **PR132 Air flow.**
If the fault is still present:
- Check the operation of the injectors (see TEST 10 Poor injector operation).
- Check cylinder balancing using the CLIP function, physical measurement icon **Compression test**.
- Check the engine compressions with the special tool, if necessary.

AFTER REPAIR	Carry out a road test followed by a complete check with the diagnostic tool.

GETtheMANUALS.org

ALP6	Fuel system leaks

NOTES	**Before dealing with this customer complaint, check that there are no faults, and the conformity (or otherwise) of the parameters and statuses using the diagnostic tool.** **If the customer complaint is not ironed out, perform the following checks:** **IMPORTANT** **Please observe the cleanliness guidelines and safety advice.**

Procedure for checking for an external leak on the fuel circuit:
Clean away traces of grease with clean thinner and wipe the part or parts concerned with cleaning cloths.
Start the engine and increase the engine temperature until the diesel fuel reaches 40/50°C.
Stop the engine and check for traces of grease on the part or parts concerned.
If this is the case, replace the part or parts concerned.
Bleed the fuel circuit and continue the checks.

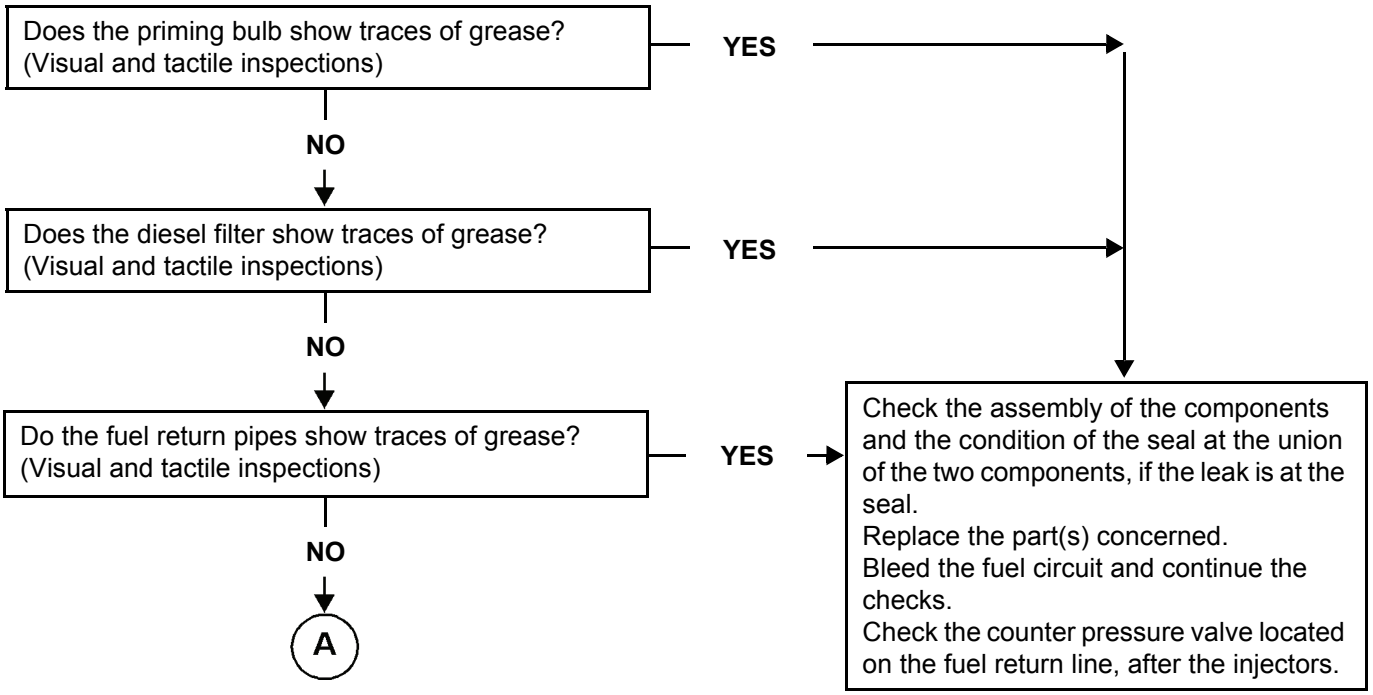

AFTER REPAIR	Carry out a road test followed by a complete check with the **diagnostic tool**.

GETtheMANUALS.org

ALP6 CONTINUED	

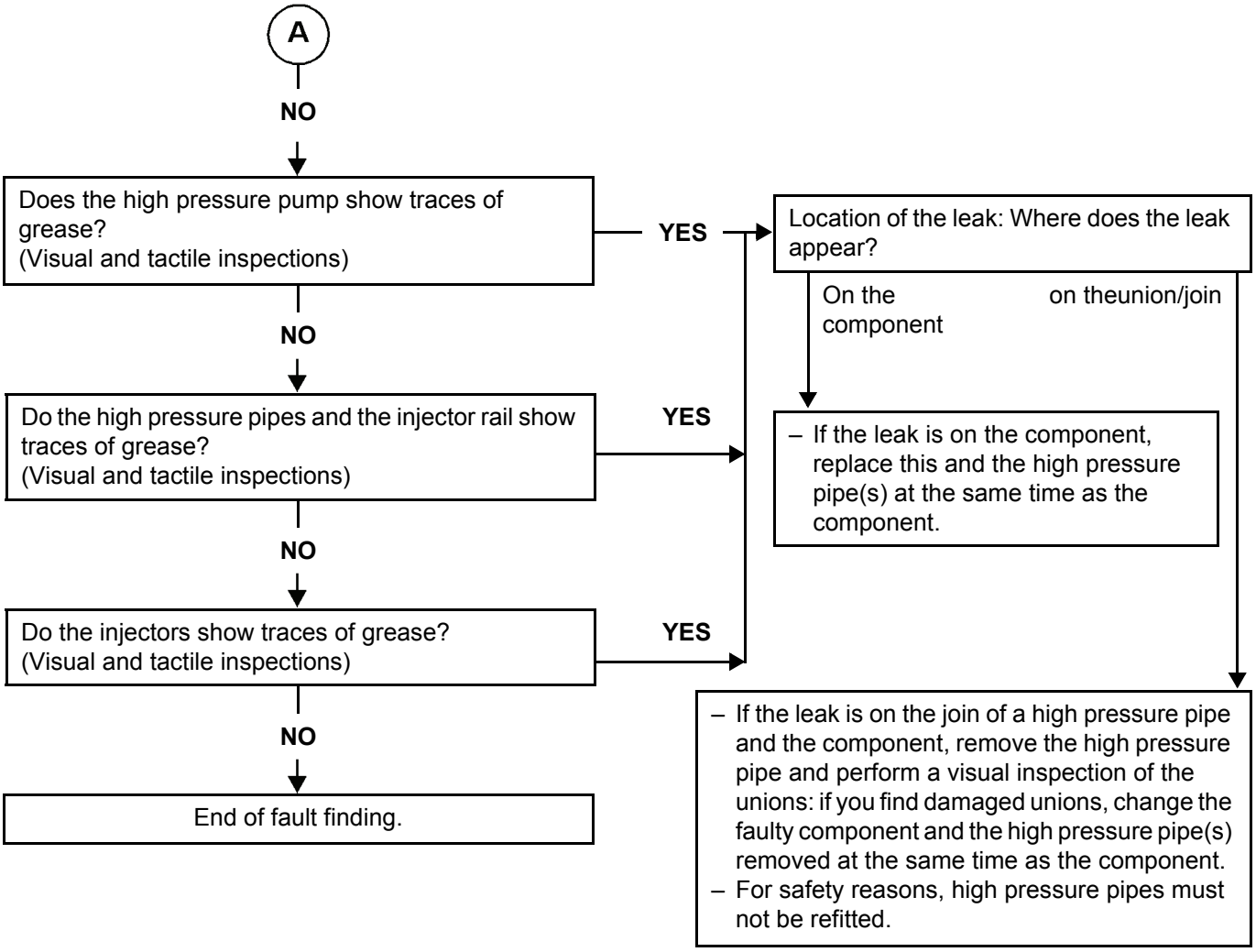

Reminder:
Only replace the rail, pump or injector if there is damage to the union and this damage is visible during checks.
Bleed the fuel circuit and continue the checks.

AFTER REPAIR	Carry out a road test followed by a complete check with the **diagnostic tool**.

GETtheMANUALS.org

ALP7	Rough idle

NOTES	**Before dealing with this customer complaint, check that there are no faults, and the conformity (or otherwise) of the parameters and statuses using the diagnostic tool.** **If the customer complaint is not eliminated, perform the following checks.**

Check the sealing and condition of the inlet circuit by running **Test 3 Turbocharged air inlet circuit check**.

↓

Check the low pressure circuit

↓

check the engine parameters:
– Check the update of the engine management computer calibration (last calibration).
– Check the conformity of the **IMA** codes (using the **Identification** screen on the **Clip diagnostic tool**).
– Check the charging circuit (see **Technical Note 6014A Checking the charging circuit**)
– To ensure the conformity of the engine speed signal, check:
  – The wiring.
  – The flywheel position and the condition of the flywheel teeth.
  – The position and tightness of the engine speed sensor.
– Check the fuel flow correction from station to station, run **Test 10 Poor injector operation**.

↓

Check the connections and wiring of the injectors.
Check the connections and wiring of the engine management computer to the injectors.
Repair if necessary.

↓

Check the high pressure circuit (external leaks) (see **ALP6 Fuel circuit leaks**).

↓

Check the engine timing (and the position of the high pressure pump sprocket).

↓

Check the lower engine:
– Check the compressions using the **Compression Test** on the **CLIP Technique diagnostic tool**, or the special tool.
– Only check the engine stand if there is noise or excessive vibration when idling.
If the checks are correct, contact the Techline.

AFTER REPAIR	Carry out a road test followed by a complete check with the **diagnostic tool**.

GETtheMANUALS.org

ALP8	Particle filter warning light comes on too often

NOTES	**Before dealing with this customer complaint, check that there are no faults except DF312 Speed request and the conformity (or otherwise) of the "parameters" and "status" using the diagnostic tool.** **Deal with the other faults first.** **If the customer complaint is not eliminated, perform the following checks.**

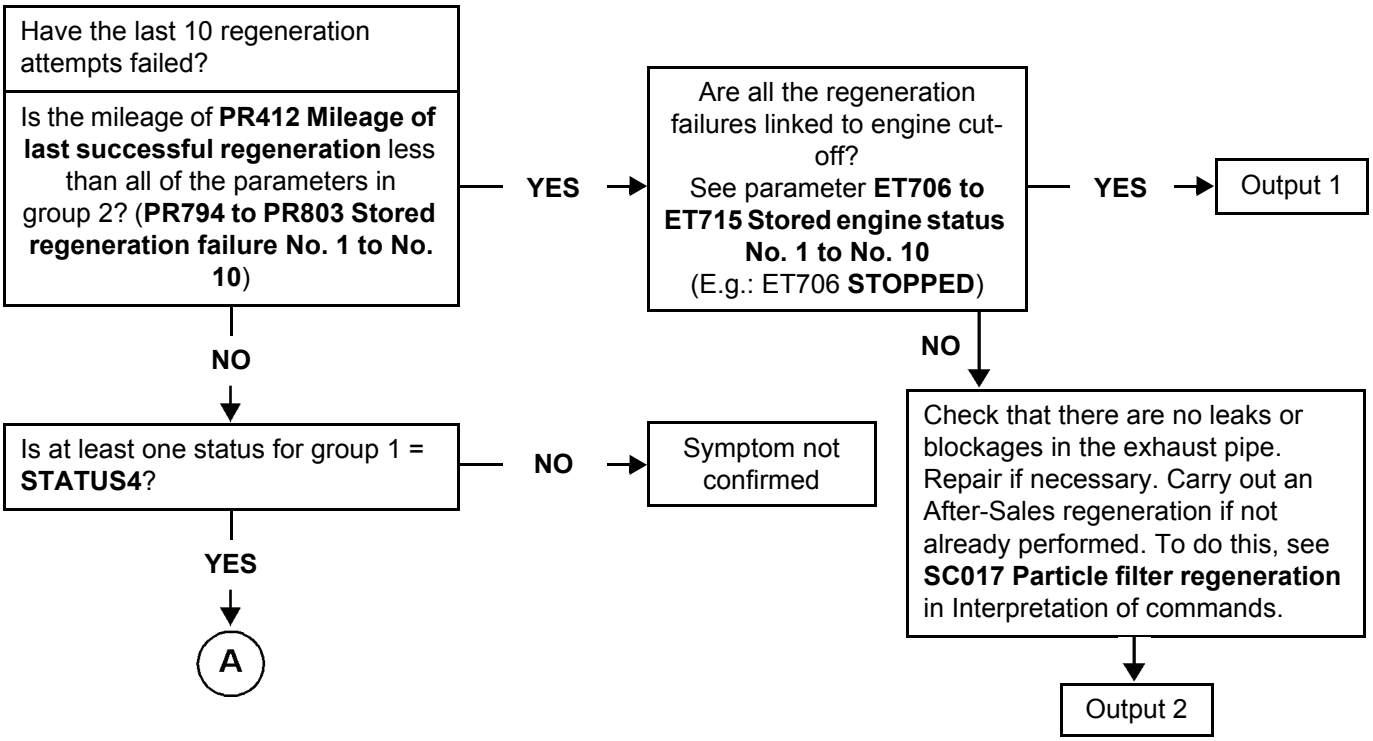

GETtheMANUALS.org

ALP8 CONTINUED 1	

A

Recognition of parameters corresponding to the start of successful regenerations.
Make adjustments to align the parameter groups.

Group 1 Regeneration start record No. 1 to 10
and
Group 2 Regeneration start record No. 1 to 10
For each **group 1** parameter, if there is no **group 2 parameter in the next 30 miles (50 km)**, note that this means a successful regeneration (R). If there is one, this means a failure (e).

B

Note **group 1** here:		Note **group 2** here:	Type of regeneration:
PR816: ____	ET742 ____	PR794: _____	PR816: R ☐ E ☐
PR817: ____	ET743 ____	PR795: _____	PR817: R ☐ E ☐
PR818: ____	ET744 ____	PR796: _____	PR818: R ☐ E ☐
PR819: ____	ET745 ____	PR797: _____	PR819: R ☐ E ☐
PR820: ____	ET746 ____	PR798: _____	PR820: R ☐ E ☐
PR821: ____	ET747 ____	PR799: _____	PR821: R ☐ E ☐
PR822: ____	ET748 ____	PR800: _____	PR822: R ☐ E ☐
PR823: ____	ET749 ____	PR801: _____	PR823: R ☐ E ☐
PR824: ____	ET750 ____	PR802: _____	PR824: R ☐ E ☐
PR825: ____	ET751 ____	PR803: _____	PR825: R ☐ E ☐

GETtheMANUALS.org

ALP8

CONTINUED 2

B

Has a parameter from group 1 reached 19660 miles (32768 km)?

YES → C

NO

For each successful regeneration (R), look in group 1 for the next parameter in order of mileage which has a status of **STATUS4**. is there at least one status?

NO → Output 3

YES

Note down the 2 identified parameters and calculate the mileage interval between them using the formula in the table.

(To be calculated for each successful regeneration)
Parameter PR412 = _____
Next parameter at STATUS 4 = _____
Interval
= Next parameter *at STATUS 4* - PR412
= _____ – _____
= _____

Is the calculated interval less than **138 miles (230 km)**?

NO → Output 4

YES

C

GETtheMANUALS.org

ALP8 CONTINUED 3	

C

YES

- Check the consistency between the **IMA** codes read on the **diagnostic tool** and the codes engraved on the injector casings.
- Check that the particle filter differential pressure sensor is correctly positioned and connected **see (MR 402 and 395, Mechanical, 19B, Exhaust, Particle filter pressure sensor: Removal - Refitting)**,
- Check the exhaust system, **see (TEST1 Exhaust system check)**.
- Check the air inlet circuit, **see (TEST3 Air inlet circuit check)**.
- Check the air flowmeter, **see (TEST5 Air flowmeter).**
- Check the turbocharger, **see (TEST5 Variable geometry turbocharger control** and **TEST6 Turbocharger rotating part)**.
- Check the injectors, see **(TEST10 Poor injector operation)**.
- Check the cylinder compressions.

If the fault has not been located and the customer complaint is still present, contact the Techline.

GETtheMANUALS.org

ALP8 CONTINUED 4	

Analysis of output for **ALP8 Particle filter warning light comes on too frequently**

ALP output no.	Output conditions for ALP8	Cause - type of driving	Regeneration frequency	What to tell the customer?
Output 1	The last 10 regeneration attempts failed because the engine was switched off.	Regeneration failures caused by **engine cut-off**.	No regeneration frequency analysis.	Explain to the customer the need to wait until the end of regeneration (warning light goes out) before switching off the engine.
Output 2	The last 10 regeneration attempts failed, but not because the engine cut out.	**Unsuitable driving conditions**	No regeneration frequency analysis.	Explain to the customer the driving criteria for when the warning light comes on.
Output 3	After successful regenerations stored in the memory, the warning light did not come on. No interval can be calculated.	Since the last successful stored regenerations, the driving conditions have not allowed the warning light to come on.	Should be normal	Vehicle correct
Output 4	The interval between a successful regeneration and the particle filter warning light coming on is correct (above the lowest possible values). The system does not have any irregular components.	Unsuitable driving (urban, low speed, etc.)	Normal	Vehicle correct

GETtheMANUALS.org

EXHAUST SYSTEM CHECK	→	**TEST1**
LOW PRESSURE CIRCUIT TEST	→	**TEST2**
TURBOCHARGED AIR INLET CIRCUIT CHECK	→	**TEST3**
AIR FLOW SENSOR	→	**TEST4**
VARIABLE GEOMETRY TURBOCHARGER CONTROL	→	**TEST 5: Apply TEST 4 of Technical Note 3419***
ROTATING SECTION OF A TURBOCHARGER	→	**TEST 6: Apply TEST 7 of Technical Note 3419***
DIESEL FUEL CONFORMITY CHECK	→	**TEST7**
INCORRECT OPERATION OF THE OVERPRESSURE VALVE	→	**TEST8**
POOR INJECTOR OPERATION	→	**TEST10**
TEMPERATURE UPSTREAM OF TURBINE TOO LOW	→	**TEST11**

*: Technical Note 3419: Fault finding of the turbocharger for petrol and diesel engines

GETtheMANUALS.org

TEST1	Exhaust system check

Engine stopped: Check that the silencer outlet is not blocked. Repair or replace the silencer, if necessary.

↓

Check the seal of the exhaust manifold on the contact surface between the turbocharger and the exhaust manifold.
Is the seal in order?

NO → Repair or replace the faulty part.

YES

↓

Loosen the catalytic converter on the turbocharger side.
Place a wooden block between the two parts.
Start the vehicle and check if the engine runs better.
Is the engine running normally?

NO → The exhaust pipe is not the cause of the fault, repeat the engine fault finding (see Customer complaints - Fault finding chart (ALP)).

YES

↓

Retighten the catalytic converter.
Loosen or separate the particle filter on the catalytic converter side. Place a wooden block between the two parts if necessary.
Start the vehicle and check if the engine runs better.
Is the engine running normally?

NO → Replace the catalytic converter.

YES

↓

(A)

GETtheMANUALS.org

TEST1 CONTINUED	

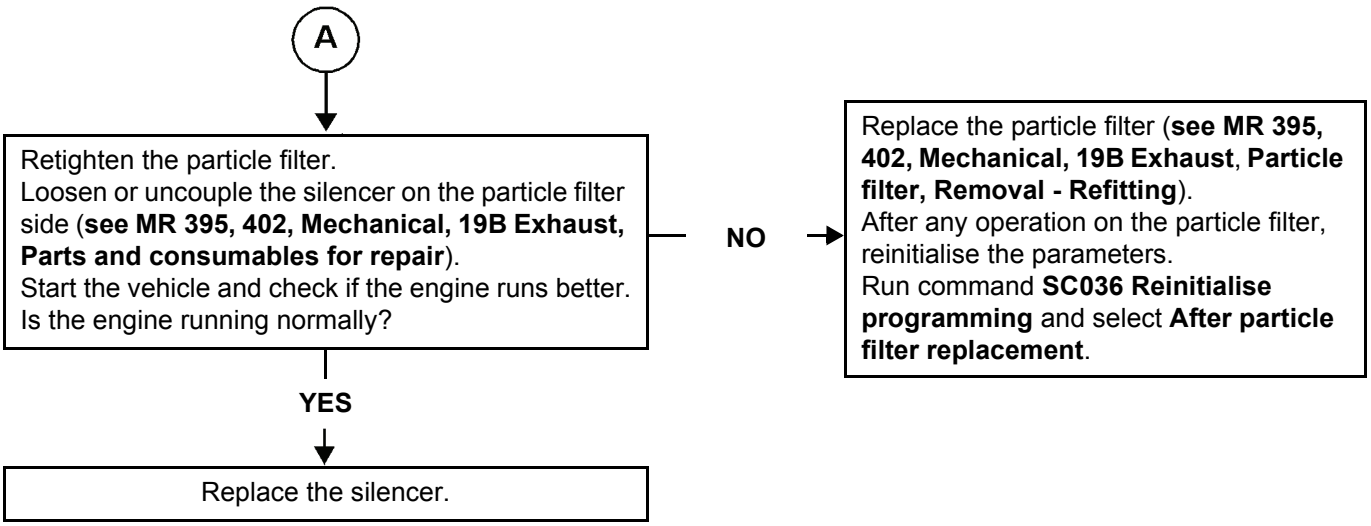

GETtheMANUALS.org

TEST2	Low pressure circuit check

CP3 HIGH PRESSURE PUMP, M9R Engine

Check the fuel filter:
- Conformity of the fuel filter (correct part number and RENAULT filter),
- Positioning and clogging condition of the filter cartridge,
- Positioning and condition of the seals.
- **If there is metal swarf in the filter:**
  Replace the fuel filter, bleed the circuit and **continue the fault finding procedure**.

↓

Supplying the injection system with fuel from an additional tank.
This operation aims to detect possible faults in the low pressure supply system of a vehicle by replacing it entirely with an additional tank.
Mode:
- Disconnect the diesel fuel supply pipe at the fuel filter inlet and seal it with a plug.
- Connect a tube to the fuel filter inlet and insert the other end into a **clean** container which is approximately 5 litres in volume.
- Disconnect the diesel return pipe at the diesel temperature sensor (pump return and injector return join), and block it using a plug.
- Connect a transparent pipe to the union of the diesel temperature sensor, and insert the other end in the container.
- Fill the container with **clean** diesel fuel.
- Start the engine and let the system drain itself of its air (there must not be any air bubbles in the return pipe).

↓

Is the customer complaint still present? — **YES** → If the low pressure circuit is in order, reconnect the various low pressure circuit pipes and repeat the fault finding procedure in the fault finding chart (**ALP 2**) or for the fault which refers to this test.

NO

↓

Are the low pressure circuit connections in order and in good condition? — **NO** → Carry out the necessary repairs.

YES

↓

(A)

GETtheMANUALS.org

TEST2 CONTINUED	

(A)

Check the condition of the priming bulb, and that it is working properly. Perform repairs if necessary and continue the test.

Check the condition of all the low pressure diesel pipes from the tank to the injection pump (in particular no pinching of pipes).

If the fault is still present with a low fuel level, check the consistency of the actual fuel level and that indicated on the instrument panel.
– The transfer pump is supplied via a venturi valve located beneath it.
Check that the opening of the venturi (6 to 8 mm in diameter) is not blocked by dirt contained in the fuel tank.
Check the priming of the low pressure diesel circuit.

Check the conformity of the fuel used by running **test 7 Diesel fuel conformity check**

Low pressure circuit correct.
END OF TEST2.

GETtheMANUALS.org

TEST3	Checking the turbocharged air inlet circuit

Engine stopped: Check the low and high pressure air circuits for **leaks** (air leaks in or out, upstream or downstream of the turbocharger).

→ Check the parts that are abnormally greasy of the circuit and reveal a lack of tightness.
Check:
– the condition and fitting of the ducts (foreign bodies, clogged, disconnected, pinched, broken, holed, cut, tightness of the mounting bolts, etc.).
– the presence, condition and fitting of the seals.
– the present and tightening of the clamps.
– The fitting of the turbocharging pressure sensor.
– The pipes and the take-off point between the air duct and the turbocharging sensor.
Carry out the necessary repairs.

Checking the air filter.

→ Check:
– That the air filter unit inlet and outlet are not blocked.
– The condition and fitting of the air filter unit (disconnected, broken, perforated, etc.).
– The cleanliness, conformity and the absence of deformation of the filter element.
– The air flowmeter: run **test 4 Air flowmeter**.
Carry out the necessary repairs.

Check:
– the condition of the damper valve.
– the tightness of the mounting bolts,
– cracks in the damper valve.
Carry out the necessary repairs.
Replace if necessary.

→ Check that there is no leak at the exhaust manifold, in particular at the exhaust manifold/turbocharger connection.
Check the exhaust: run **test 1 Exhaust pipe check**.
Carry out the necessary repairs.

→ A

GETtheMANUALS.org

TEST3 CONTINUED	

A

Carry out a visual inspection of the EGR circuit sealing.
Note: the operating play in the EGR heat exchanger valve shaft produces small black marks due to a slight leak of no importance. Do not replace this part.
Replace if necessary.

Check the condition of the intercooler:
– clogging,
– leaks (vehicle stationary, stabilise the engine speed between 3500 rpm and 4000 rpm and check that there are no leaks).
Replace if necessary.

Check that the turbocharging pressure sensor take-off point is not blocked.
Replace if necessary.
END OF TEST3.

GETtheMANUALS.org

TEST4	Air flowmeter

POLLUTION OF THE GRILLES:
Visual inspection: remove the flow sensor; there must be no foreign bodies in the grilles.
Do not clean the grilles using compressed air or any other procedure: this damages the sensors and creates variations from the values displayed on the CLIP tool.
Check the sealing of the air circuit upstream of the air flowmeter:
disconnected or pierced pipes and air filter unit, seals present.
Replace the air flowmeter if necessary and clean upstream of this, if necessary.

↓

ELECTRICAL COMPONENT BREAKAGE:
Visual inspection:
dismantle the flow sensor, the components should not be broken.
Replace the air flowmeter if necessary.

↓

OXIDATION OF THE ELECTRICAL COMPONENTS:
Visual inspection:
dismantle the air flowmeter, there should not be any green deposits on the electrical components.
Replace the air flowmeter if necessary.

↓

CLOGGING OF THE AIR FLOWMETER:
Test:
– Check the values for conformity:
  * During the first 5 seconds after starting:
  – Coolant temperature: 80°C,
  – Engine speed: idle speed (800 ± 50 rpm);
  – Air flow measurement: 47 kg/h ± 10;
  – OCR* EGR valve: between - 10% and 0%.

* After the starting phase:
  – Coolant temperature: 80°C,
  – Engine speed: idle speed (800 ± 50 rpm);
  – Air flow measurement: 30 kg/h ± 5%;
  – EGR valve OCR*: between 10% and 40%.

– Refer to **DF056 Air flow sensor circuit** 2.def, for the air flow sensor checks.
Replace the air flowmeter if necessary.

* OCR = Opening Cycle Ratio.

GETtheMANUALS.org

TEST4 CONTINUED	

Contamination of the grille

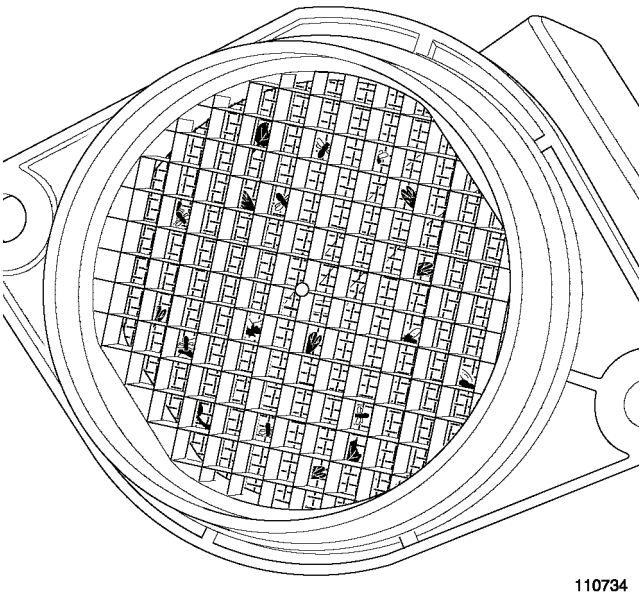

110734

Damage to the electrical sensors

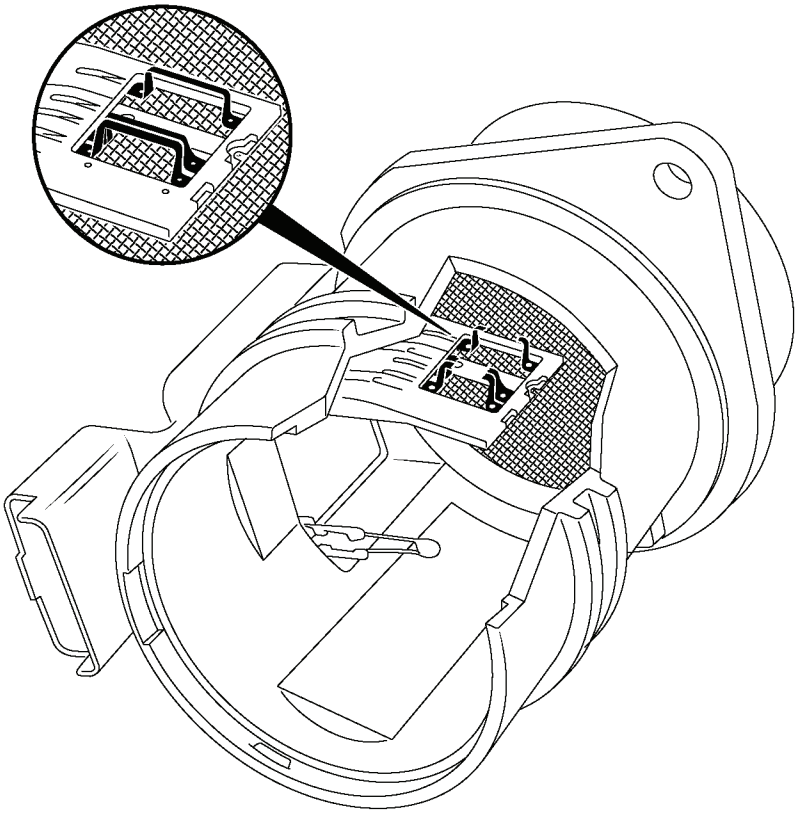

110736

END OF TEST4.

GETtheMANUALS.org

TEST7	Diesel fuel conformity check

WARNING
During this operation, it is essential to:
– refrain from smoking or bringing incandescent objects close to the work area,
– guard against petrol splashes caused by the residual pressure in the pipes,
– wear safety goggles with side guards,
– wear leaktight gloves (Nitrile type).

IMPORTANT
– To avoid any corrosion or damage, protect the areas on which fuel is likely to run.
– To prevent impurities from entering the circuit, place protective plugs on all fuel circuit components exposed to the open air.

Preparations:
Weigh an empty **1300 ml plastic cup (part no. 77 11 171 413)** with its cover **(part no. 77 11 171 416)** using electronic scales such as those used in body paint workshops (example: **PANDA part no. 77 11 224 995**). Record the weight of the empty plastic cup.
This type of plastic cup is used to prepare paint.

Take a **1 l** fuel sample from the **diesel filter outlet** (see **MR339 (Laguna II ph1), Mechanical, 19, Tank, Fuel tank or MR353 (Vel Satis ph1), Mechanical, 19C, Tank, Draining the fuel tank** or **MR395 (Laguna II ph2) or MR402 (Vel Satis ph2), Mechanical, 19C, Tank, Fuel tank: Draining)**, using a pneumatic transfer pump (**part no. 634-200**) and place it in a **1300 ml** plastic cup.
Cover the plastic cup with its cover and let it settle for approximately**2 minutes**.

Is the fuel cloudy or does it separate into two parts?

YES → Presence of water in diesel fuel, the fuel is not compliant.
Drain the fuel circuit, including the tank (see **MR339 (Laguna II ph1), Mechanical, 19, Tank, Fuel tank or MR353 (Vel Satis ph1), Mechanical, 19C, Tank, Draining the fuel tank** or **MR395 (Laguna II ph2) or MR402 (Vel Satis ph2), Mechanical, 19C, Tank, Fuel tank: Draining**).

NO → A

GETtheMANUALS.org

TEST7 CONTINUED 1	

A

Weigh the diesel fuel and note the fuel weight after subtracting the weight of the empty plastic cup and its cover.
Does the fuel weight fall between the minimum and maximum weights given in the table below?

Calculated weight (g.)		Fuel temperature (°C)
Min. weight	Max. weight	
821	846	13
821	846	14
820	845	15
819	844	16
819	844	17
818	843	18
817	842	19
816	841	20
816	841	21
815	840	22
814	839	23
814	839	24
813	838	25

Check the fuel temperature by immersing a thermometer in the plastic cup.

YES

End of test.

NO

The fuel is not correct.
If the fuel weight is less than the minimum value then there is petrol in the diesel fuel.
If the fuel weight is greater than the maximum value then there is oil in the diesel fuel.
Drain the fuel circuit, including the tank (see MR339 (Laguna II ph1), Mechanical, 19, Tank, Fuel tank or MR353 (Vel Satis ph1), Mechanical, 19C, Tank, Draining the fuel tank or MR395 (Laguna II ph2) or MR402 (Vel Satis ph2), Mechanical, 19C, Tank, Fuel tank: Draining).

GETtheMANUALS.org

TEST7 CONTINUED 2	

Note:
If the weight measured reaches the limit values, the measurement can be performed with a **2230 ml plastic cup (part no. 77 11 171 414)** and its cover **(part no. 77 11 171 417):**
- Carry out a quick test drive in order to mix the fuel, then remove **2 l** of fuel.
- Perform the test again and check the results by multiplying the limit values by 2.

Contact the Techline if you have doubts or problems with the customer.

GETtheMANUALS.org

TEST8	Incorrect operation of the overpressure valve

Part 1. Overpressure valve return flow test:

Is the engine working?

YES

NO

– Fit **Mot. 1760** as shown in the tool fitting procedure (see part 2).
– Press the Start button (with card).
– Measure the length travelled by the diesel fuel in the pipes of the **Mot. 1760**.
– Replace the overpressure valve if the diesel length travelled is greater than **10 cm**.

– The overpressure valve fuel return pipe must be fitted to the injector rail.
– Start the engine.
– Set the Clip diagnostic tool to parameter reading mode.
– Raise the temperature of the engine.
– Display parameter **PR063 Fuel temperature**. Increase the diesel temperature to **above 50°C**.
– Switch off the engine.

– Fit **Mot. 1760** as shown in the tool fitting procedure (see part 2).
– View parameter **PR038 Rail pressure**.
– Ask another Cotech to monitor the rise in fuel in the container during engine turnover, as the container will fill up quickly if the overpressure valve is leaking.
– Start the engine.
– Accelerate the engine until the pressure in the rail is **550 bar**:
  – if the engine speed is **less than 3000 rpm**, maintain this pressure,
  – if the engine speed is greater than **3000 rpm**, reduce the engine speed until the rail pressure is **500 bar** and maintain this pressure.
– Maintain these conditions for 1 min.
– Release the accelerator pedal and maintain the idle speed for **10 seconds**.
– Switch off the engine.
– Measure the length of diesel contained in the measuring cylinder.
– Replace the injector rail if the quantity of diesel is greater than **5 ml**.
– Remove **Mot. 1760** as shown in the tool removal procedure (see part 3).

GETtheMANUALS.org

TEST8 CONTINUED 1	

Part 2: Fitting the tool:

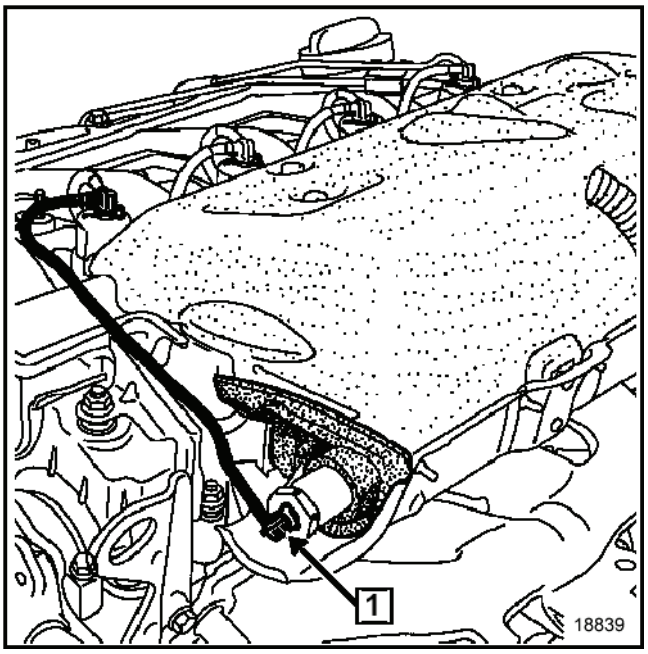

Remove the engine undertray.

Disconnect the overpressure valve fuel return pipe according to the following procedure (**do not remove the clips**):
– press the clip,
– pull vertically on the end piece (**1**) of the fuel return pipe.

IMPORTANT
The end piece is fragile. Be careful not to break it by pulling it too hard. Replace

GETtheMANUALS.org

TEST8 CONTINUED 2	

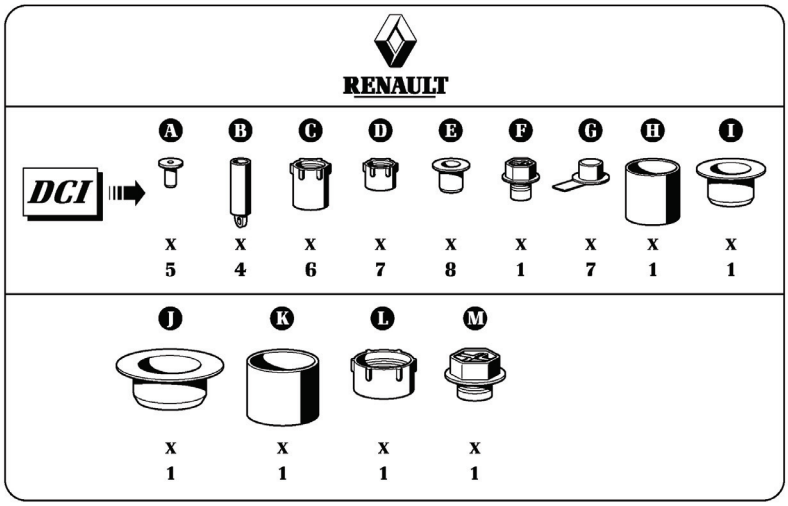

107209

Fit blanking plugs **(B)**, from the kit (part number **77 01 208 209**), on the end pieces of the fuel return pipe. If **Mot. 1760** is not fitted immediately on the overpressure valve, place a blanking plug (**A**) on the overpressure valve fuel return opening.

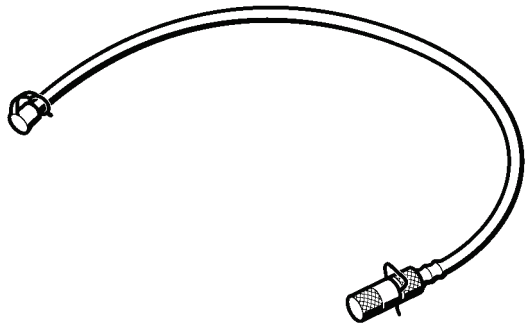

113195

Shown above is the pipe (**Mot. 1760**) with the end piece (**2**) on the right and the plug (**4**) on the left.

Remove the clip and the plug from the end piece (**2**) of the pipe of **Mot. 1760**, leave the plug (**4**) in place.

GETtheMANUALS.org

TEST8 CONTINUED 3	

Connect the pipe of **Mot. 1760** to the rail overpressure valve (without removing the clip on the overpressure valve):
– press down on the clip (**1**) of the overpressure valve,
– insert the end piece (**2**) in the overpressure valve fuel return opening.
– do not forget to fit the end piece plug (**2**) to the overpressure valve fuel return opening using the clip supplied.

Remove the plug (**4**).
Insert the end of the pipe in the measuring cylinder of **Mot. 1760**, the measuring cylinder is taken from **Mot. 1711**.

Measure the return flow (see the procedure in **part 1** of this test).

Part 3: Removing the tool:

IMPORTANT
Use a cleaning cloth (part number **77 11 211 707**) to absorb fuel run-off.

Disconnect the pipe of **Mot. 1760** on the overpressure valve:
– press down on the clip (**1**) of the overpressure valve,
– pull horizontally on the end piece (**2**) of the pipe of **Mot. 1760** while putting a cloth on the end piece (**2**) to avoid the drips.

Lift the end piece (**2**) vertically so that the fuel contained in the pipes flows into the measuring cylinder of **Mot. 1760**.

Remove the plug from the fuel return pipe end piece (**2**).

Connect the complete fuel return pipe to the overpressure valve.

Wipe up any diesel run-off with a cleaning cloth (part number **77 11 211 707**).

GETtheMANUALS.org

TEST 10	Incorrect injector operation

Part A: Fuel regulation balance check for each injector (individual correction):
– In the **CLIP diagnostic tool**, choose the **Fuel circuit** subfunction.
– With the engine idling and the fuel temperature **> 50°C**, display the flow correction values for each injector (individual correction), i.e.:
  – **PR364 Cylinder no. 1 fuel flow correction.**
  – **PR405 Cylinder no. 2 fuel flow correction.**
  – **PR406 Cylinder no. 3 fuel flow correction.**
  – **PR365 Cylinder no. 4 fuel flow correction.**

The **normal value** for injector flow correction is between **-5 mg/st and +5 mg/st**.
Check the **IMA** injector codes, by comparing the **IMA** engraved codes on the injectors (the **IMA** codes are read from left to right) and the **IMA** codes read with the **Clip diagnostic tool**.
– If the **IMA** codes are correct, continue the fault finding procedure,
– If not, modify the incorrect **IMA** codes using command **SC002 Enter injector codes** (see **Interpretation of commands**).

To confirm the repair, refer to **part B** of **test 9**.

CASE No. 1: If at least one of these values is equal to or greater than + 5 mg/st
– Check the valve clearance.
– Check the condition of the engine and the compressions (using the **Clip diagnostic tool** or a compression gauge).
– If the compression test reveals a cylinder fault, carry out the necessary repairs.
– If the compression is correct, check that the injector is fitted correctly (see **MR 364 (Mégane II), 370 (Scénic II), or 395 (Laguna II), Mechanical, 13B, Diesel injection, Diesel injector: Removal - Refitting**)

In particular, check that each injector has one compression washer.
Check the fuel regulation again for each injector (individual correction).
If not, replace the injector and check for the sealing washer. Modify the **IMA** code using command **SC002 Enter injector codes** (see **Interpretation of commands**).
– Run **Part B** of this test to confirm the fault finding procedure.

CASE no. 2: If at least one of these values is less than or equal to - 5 mg/stroke
– Check the valve clearance.
– Check the level and condition of the engine oil.
– Remove the injector with the largest correction.
– If there is diesel fuel contamination, check the condition of the cylinder concerned (cylinder, piston, valves). Use an endoscope if possible.
– Only replace the removed injector, and modify the **IMA** code using command **SC002 Enter injector codes** (see **Interpretation of commands**).
– Run **Part B** of this test to confirm the fault finding procedure.

GETtheMANUALS.org

TEST 10 CONTINUED 1	

CASE No. 3: If at least one of these values does not stabilise (20 seconds after starting).
– Check the low pressure circuit with **test 2 Low pressure circuit check**.
– Check the conformity of the fuel by running **test 7 Diesel fuel conformity check**.
– Run **Part B** of this test to confirm the fault finding procedure.

CASE No. 4: If the fuel flow correction values are all correct (between - 5 mg/st and + 5 mg/st)
Run **Part C** of this test (**Fuel return flow measurement**).

IMPORTANT
For the removal - refitting of the injectors, observe the cleanliness and safety instructions (see **MR 364 (Mégane II), 370 (Scénic II), or 395 (Laguna II), Mechanical, 13B, Diesel injection, Diesel injector: Removal - Refitting**).

Part B: Confirmation of flow correction fault finding for each injector (individual correction):
Clear the faults and perform a test **with the engine idling** for at least **5 minutes**, fuel temperature **> 50 °C**.
Check that no fault appears on the **CLIP diagnostic tool** and that the corrective values do not reach **± 5 mg/stroke** to confirm the repair.
If the customer complaint is still present and the fuel flow correction values are between **-5 mg/st and +5 mg/st**, run **Part A: Fuel regulation balance check for each injector (individual)** of this test **(Case no. 4)**.
If one or more cylinders has an flow correction value for each injector that exceeds **±5 mg/st**, apply **Part A**: **Fuel regulation balance check for each injector (individual)** of this test.

GETtheMANUALS.org

TEST 10 CONTINUED 2	

Part C: Measuring fuel return flow

1 - Fitting the tool:
This part of the test should only be carried out if PR063 "Fuel temperature" is greater than 50°C (see step 2 of part C of this test).
Remove the engine undertray
Disconnect the entire fuel return pipe in accordance with the following procedure (do not remove the clips):
– press the clip,
– pull vertically on the end piece (see arrow) of the fuel return pipe.

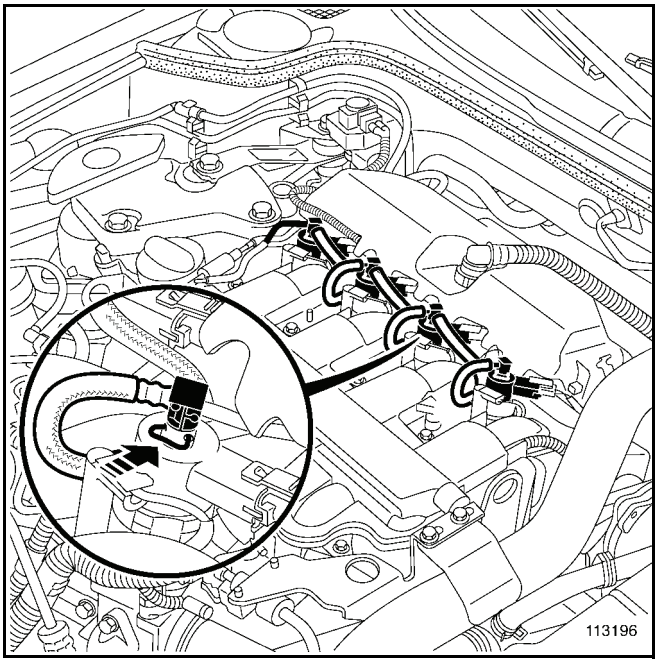

IMPORTANT
The end piece is fragile. Be careful not to break it by pulling it too hard. Replace all removed clips.

GETtheMANUALS.org

TEST 10 CONTINUED 3	

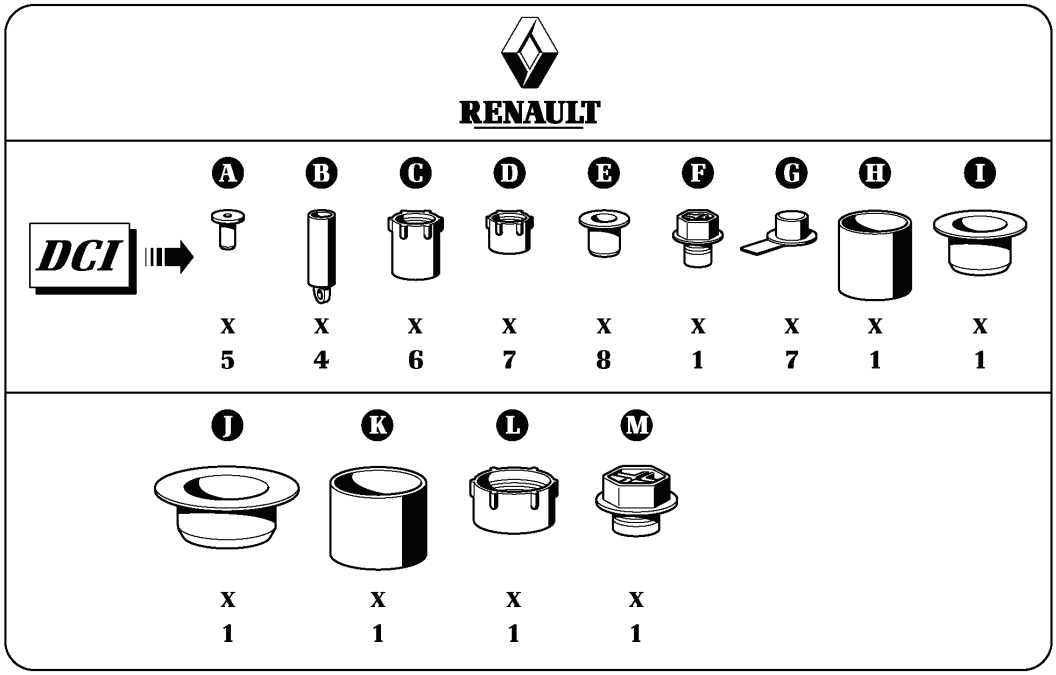

107209

Fit the blanking plugs (**B**), from the kit **(part number 77 01 208 229)**, on the end pieces of the fuel return pipe.
If **mot. 1760** is not fitted immediately on the injectors, put blanking plugs (**A**) on the fuel return openings of the injectors.

GETtheMANUALS.org

TEST 10 CONTINUED 4	

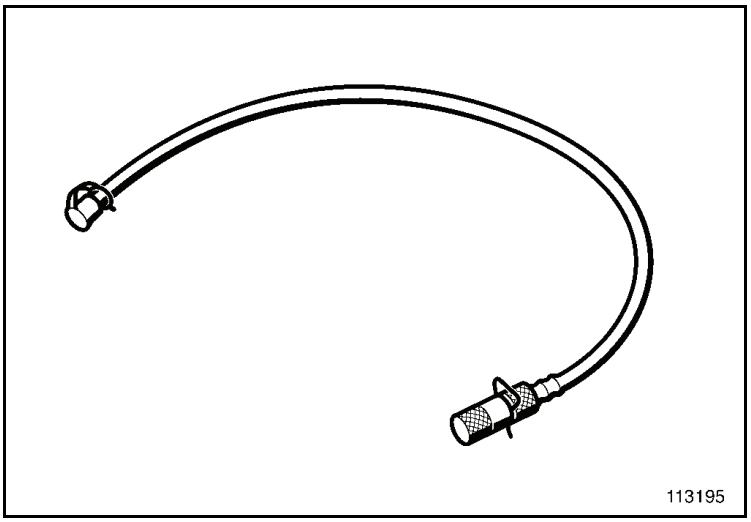

On the pipes of tool **mot. 1760** (see illustration **113195**), remove the clips and the plugs from the end pieces (on the right in the diagram) and leave the plugs (on the left in the diagram) in place.

GETtheMANUALS.org

TEST 10 CONTINUED 5	

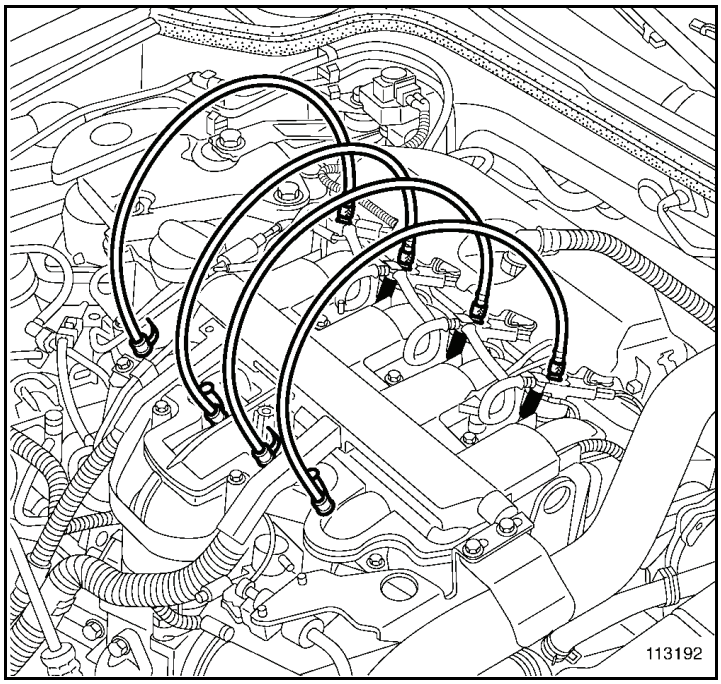

– Connect the pipes of tool **Mot. 1760** to the injectors (without removing the clips on the injectors):
– press on the injector clip,
– insert the end piece in the injector fuel return orifice,
– remember to fit the end piece plugs to the injector fuel return openings with the clips provided,
– remove the plugs left on tool **mot. 1760**

GETtheMANUALS.org

TEST 10 CONTINUED 6	

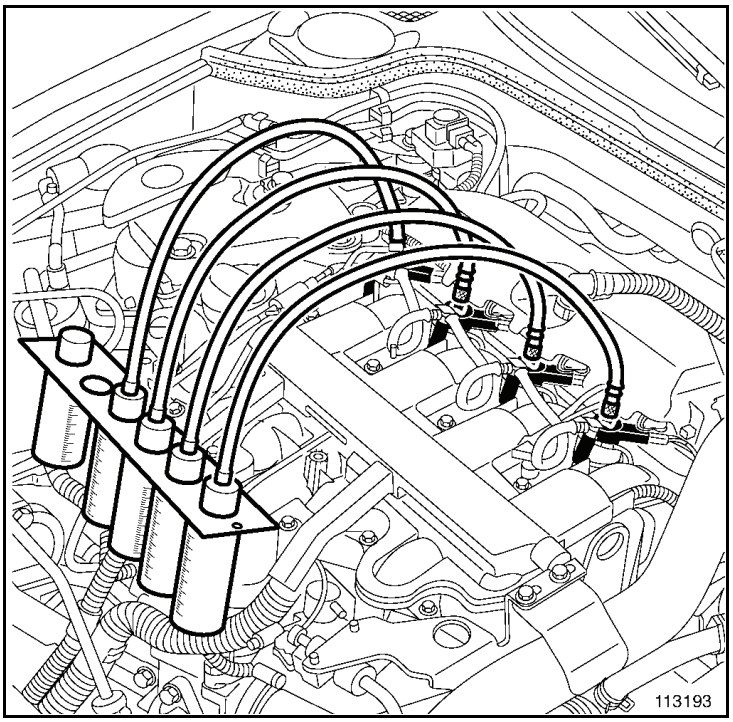

Insert the ends of the pipes into the measuring cylinders of tool **mot. 1760**. The measuring cylinders are taken from tool **mot. 1711.**

GETtheMANUALS.org

TEST 10 CONTINUED 7	

2 - Injector return flow balance check:

Does the engine start? — **NO** →
- Fit **Mot. 1760** as shown in the tool fitting procedure.
- Start the vehicle or do a starting sequence of **15 s** (with ignition key).
- Measure the length travelled by the diesel fuel in the pipes of the **Mot. 1760**.
- Replace the injector if the length travelled by the fuel is more than **10 cm** compared with the average of the other three injectors.

YES ↓

- The injector return pipes must be fitted to the injectors.
- Start the engine.
- Display the **Fuel circuit** sub-function in the **CLIP diagnostic tool**.
- Raise the temperature of the engine.
- Read the diesel fuel temperature with **PR063 Fuel temperature** until a diesel fuel temperature greater than **50°C** is reached
- Switch off the engine.
- Fit **Mot. 1760** as shown in the installation procedure (see step 1).
- Check the value of the **PR038 Rail pressure**.
- Ask another Cotech to monitor the rise in fuel in the cans during engine turnover, as one of the cans will fill up quickly if one of the injectors is leaking.
- Start the engine.
- Accelerate the engine until the pressure in the rail is **550 bar**:
  - if the engine speed is **less than 3000 rpm**, maintain this pressure,
  - if the engine speed is **greater than 3000 rpm**, reduce the engine speed until the rail pressure is **500 bar** and maintain this pressure.
- Maintain these conditions for **1 min**.
- Release the accelerator pedal and maintain the idle speed for **10 seconds**.
- Switch off the engine.
- Measure the quantity of fuel contained in each measuring cylinder.
- Replace the injector if the quantity of diesel fuel is **more than 50 ml**.
- Remove **Mot. 1760** as shown in the tool removal procedure (see step 3).

GETtheMANUALS.org

TEST 10 CONTINUED 8	

3 - Removing the tool:

IMPORTANT
Use a cleaning cloth (**part number 77 11 211 707**) to absorb fuel run-off.

Disconnect the pipe from an injector:
– press on the injector clip,
– pull vertically on the end piece of the pipe of tool **mot. 1760** while putting a cloth on the end piece to avoid drips.
Lift the end piece vertically so that the fuel contained in the pipes flows into the measuring cylinders of tool **mot. 1760**.
Remove the other 3 pipes using the same procedure.
Remove the plug welds from the fuel return pipe end pieces.
Connect the complete fuel return pipe to the injectors.
Wipe up any fuel run-off with a cleaning cloth (part number **77 11 211 707**).

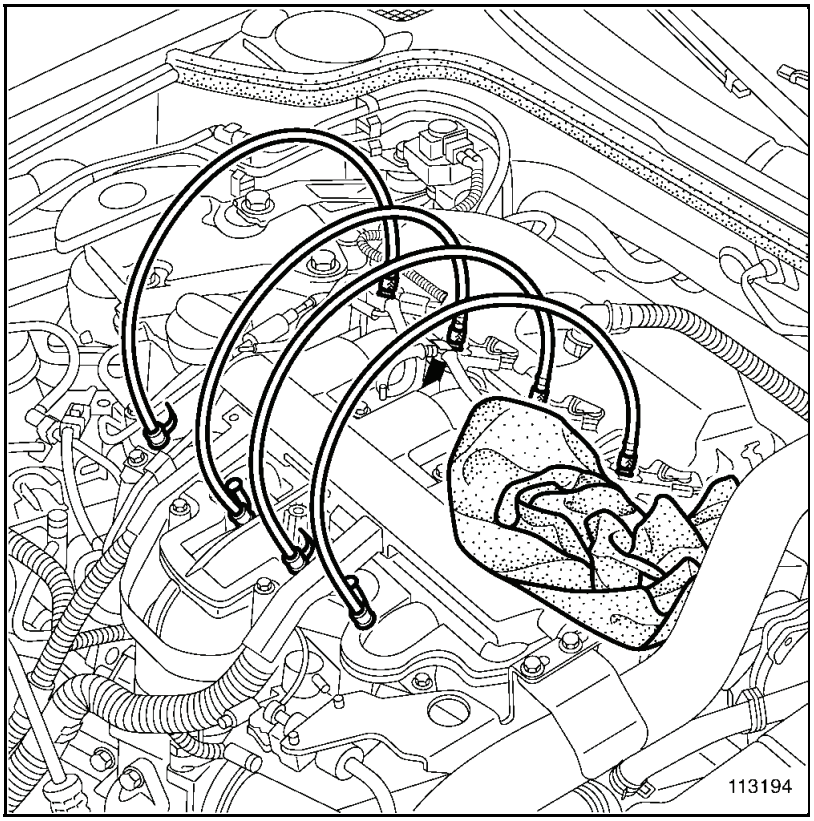

End of test 10.

GETtheMANUALS.org

TEST11	Temperature upstream of turbine too low

Perform full fault finding on the injection computer using the diagnostic tool.
Are there any present or stored faults?

YES → Apply the procedure for dealing with the associated faults.

NO

Apply **test 1 Exhaust pipe check**
Is the exhaust pipe in order?

NO → Repair then carry out another particle filter regeneration.
Run command **SC017 Particle filter regeneration (see Interpretation of commands)**
– If the second regeneration is successful, it is essential to change the engine oil and replace the oil filter.
– If the second regeneration fails, contact the Techline.

YES

Run **test 3 Turbocharged air inlet circuit check**
Is the inlet circuit in order?

NO → Repair then carry out another particle filter regeneration.
Run command **SC017 Particle filter regeneration (see Interpretation of commands)**
– If the second regeneration is successful, it is essential to change the engine oil and replace the oil filter.
– If the second regeneration fails, contact the Techline.

YES

Run **test 4 Air flowmeter**
Is the air flow sensor correct?

NO → Repair then carry out another particle filter regeneration.
Run command **SC017 Particle filter regeneration (see Interpretation of commands)**
– If the second regeneration is successful, it is essential to change the engine oil and replace the oil filter.
– If the second regeneration fails, contact the Techline.

YES

Apply **test 10 Poor injector operation**.
Are the injectors correct?

NO → Repair then carry out another particle filter regeneration.
Run command **SC017 Particle filter regeneration (see Interpretation of commands)**
– If the second regeneration is successful, it is essential to change the engine oil and replace the oil filter.
– If the second regeneration fails, contact the Techline.

YES

Contact the Techline.

GETtheMANUALS.org

VEL SATIS

1 Engine and peripherals

13B DIESEL INJECTION

EDC15C3
Program No.: CB
Vdiag No.: 10-14-18-1C

Fault finding - Introduction	13B - 2
Fault finding - Cleanliness guidelines	13B - 7
Fault finding - System operation	13B - 9
Fault finding - Allocation of computer tracks	13B - 14
Fault finding - Replacement of components	13B - 17
Fault finding - Configurations and programming	13B - 20
Fault finding - Fault summary table	13B - 22
Fault finding - Interpretation of faults	13B - 25
Fault finding - Conformity check	13B - 127
Fault finding - Status summary table	13B - 163
Fault finding - Interpretation of statuses	13B - 164
Fault finding - Parameter summary table	13B - 192
Fault finding - Interpretation of parameters	13B - 194
Fault finding - Command summary table	13B - 197
Fault finding - Interpretation of commands	13B - 198
Fault finding - Customer complaints	13B - 221
Fault finding - Fault Finding Chart	13B - 222
Fault finding - Test	13B - 236
Fault finding - Glossary	13B - 271

"The repair procedures given by the manufacturer in this document are based on the technical specifications current when it was prepared.

The procedures may be modified as a result of changes introduced by the manufacturer in the production of the various component units and accessories from which his vehicles are constructed."

All rights reserved by Renault s.a.s.

Copying or translating, in part or in full, of this document or use of the service part reference numbering system is forbidden without the prior written authority of Renault s.a.s.

© Renault s.a.s. 2008

GETtheMANUALS.org

1. SCOPE OF THIS DOCUMENT

This document presents the fault finding procedure applicable to all computers with the following specifications:

Vehicle: **Laguna II, VelSatis, Velsatis ph2, Espace IV**

Function concerned: **Diesel injection**

Computer name: **BOSCH EDC15C3**

Program No.: **CB**

Vdiag No.: **10, 14, 18, 1C**

2. PREREQUISITES FOR FAULT FINDING

Documentation type

Fault finding procedures (this document):
– Assisted fault finding (integrated into the diagnostic tool), Dialogys.
Wiring diagrams:
– Visu-Schéma (CD-ROM), paper.

Type of diagnostic tools

– **CLIP + multiplex line sensor**

Special tooling required

Special tooling required	
	Multimeter
Elé. 1681	Universal bornier

3. REMINDERS

Procedure

To run fault finding on the vehicle computers, switch on the ignition.

Connect the diagnostic tool and perform the required operations.

IMPORTANT
For the **Espace IV, Laguna II, Velsatis, Velsatis ph2** proceed as follows:
– vehicle card in reader,
– connect the diagnostic tool and perform the required operations.
For the **Velsatis ph2** proceed as follows:
– press the unlocking button on the card,
– insert the card in the reader,
– engage a gear,
– press the start button (interrupting the timed + after ignition feed mode),
– press the Start button for longer than 5 seconds until it flashes rapidly.
To **cut off + after ignition**, proceed as follows:
– disconnect the diagnostic tool,
– remove the card.

GETtheMANUALS.org

Faults

Faults are declared present or stored (depending on whether they appeared in a certain context and have disappeared since, or whether they remain present but are not diagnosed within the current context).

The **present** or **stored** status of faults should be taken into consideration when the diagnostic tool is switched on after the + after ignition feed (without any system components being active).

For a **present fault**, apply the procedure described in the **Interpretation of faults** section.

For a **stored fault**, note the faults displayed and apply the instructions in the **Notes** section.

If the fault is **confirmed** when the instructions in the Notes section are applied, the fault is present. Deal with the fault.

If the fault is **not confirmed**, check:
- the electrical lines which correspond to the fault,
- the connectors for these lines (for oxidation, bent pins, etc.),
- the resistance of the component detected as defective,
- the condition of the wires (melted or split insulation, wear).

Conformity check

The aim of the conformity check is to check data that does not produce a fault on the diagnostic tool because the data is inconsistent. Therefore, this stage is used to:
- carry out fault finding on faults that do not have a fault display, and which may correspond to a customer complaint.
- check that the system is operating correctly and that there is no risk of a fault recurring after repairs.

This section gives the fault finding procedures for statuses and parameters and the conditions for checking them.

If a status is not behaving normally or a parameter is outside the permitted tolerance values, consult the corresponding fault finding page.

Customer complaints - Fault finding chart

If the test with the diagnostic tool is OK but the customer complaint is still present, the fault should be processed by **customer complaints**.

A synopsis of the general procedure to follow is provided on the following page in the form of a flow chart.

GETtheMANUALS.org

4. FAULT FINDING PROCEDURE

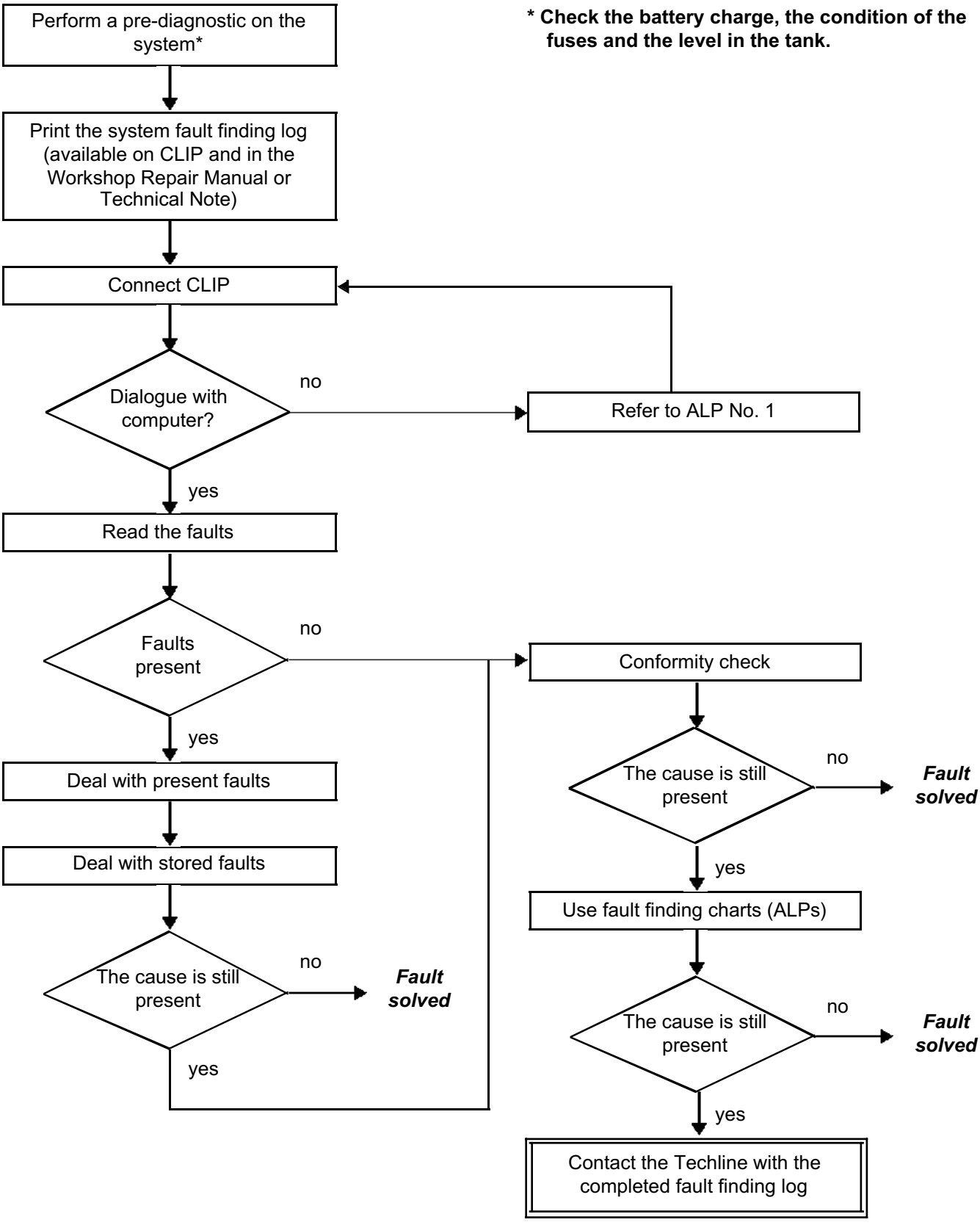

*** Check the battery charge, the condition of the fuses and the level in the tank.**

GETtheMANUALS.org

4. FAULT FINDING PROCEDURE (continued)

Wiring check

Fault finding problems
Disconnecting the connectors and/or manipulating the wiring harness may temporarily remove the cause of a fault.
Electrical measurements of voltage, resistance and insulation are generally correct, especially if the fault is not present when the analysis is made (stored fault).

Visual inspection
Look for damage under the bonnet and in the passenger compartment.
Carefully check the fuses, insulators and wiring harness routing.
Look for signs of oxidation.

Physical inspection
While manipulating the wiring harness, use the diagnostic tool to note any change in fault status from stored to present.
Make sure that the connectors are properly locked.
Apply light pressure to the connectors.
Twist the wiring harness.
If there is a change in status, try to locate the source of the fault.

Inspection of each component
Disconnect the connectors and check the appearance of the clips and tabs, as well as the crimping (no crimping on the insulating section).
Make sure that the clips and tabs are properly locked in the sockets.
Check that no clips or tabs have been dislodged during connection.
Check the clip contact pressure using an appropriate model of tab.

Resistance check
Check the continuity of entire lines, then section by section.
Look for a short circuit to earth, to **+ 12 V** or with another wire.

If a fault is detected, repair or replace the wiring harness.

GETtheMANUALS.org

5. FAULT FINDING LOG

IMPORTANT

IMPORTANT
Any fault on a complex system requires thorough fault finding with the appropriate tools. The FAULT FINDING LOG, which should be completed during the procedure, enables you to keep track of the procedure which is carried out. It is an essential document when consulting the manufacturer.

IT IS THEREFORE MANDATORY TO FILL OUT A FAULT FINDING LOG EACH TIME FAULT FINDING IS CARRIED OUT

You will always be asked for this log:

- when requesting technical assistance from Techline,
- for approval requests when replacing parts for which approval is mandatory,
- to be attached to monitored parts for which reimbursement is requested. The log is needed for warranty reimbursement, and enables better analysis of the parts removed.

6. SAFETY INSTRUCTIONS

Safety rules must be observed during any work on a component to prevent any damage or injury:
– check the battery voltage to avoid incorrect operation of computer functions,
– use the proper tools.

GETtheMANUALS.org

I - RISKS ASSOCIATED WITH CONTAMINATION

The high pressure direct injection system is highly sensitive to contamination. The risks associated with contamination are:
– damage to or destruction of the high pressure injection system,
– components jamming,
– components losing seal integrity.

All After-Sales operations must be performed under clean conditions. This means that no impurities (particles measuring a few microns) have entered the system during the removal-refitting procedures.

The cleanliness principle must be applied from the filter to the injectors.

What are the sources of contamination?
– metal or plastic swarf,
– paint,
– fibres:
    – from cardboard,
    – from brushes,
    – from paper,
    – from clothing,
    – from cloths.
– foreign bodies such as hair,
– ambient air,
– etc.

IMPORTANT
Cleaning the engine using a high pressure washer is prohibited because of the risk of damaging connections. In addition, moisture may collect in the connectors and create electrical connection faults.

II - Instructions to be followed before carrying out any work

IMPORTANT
Before any work is carried out on the high pressure injection system, protect:
– the accessories and timing belts,
– the electrical accessories, (starter, alternator, electric power-assisted steering pump),
– the flywheel surface, to prevent any diesel from running onto the clutch friction plate.

Check that you have plugs for the unions to be opened (set of plugs available from the Parts Department). The plugs are single-use only. After use, they must be discarded (once used they are soiled and cleaning is not sufficient to make them reusable). Unused plugs must be discarded.

GETtheMANUALS.org

Check that you have hermetically resealable plastic bags for storing removed parts. Parts stored in this way will be less susceptible to the risk of contamination. The bags are to be used once only, and discarded after use.

Obtain lint-free cleaning cloths (cloth part number **77 11 211 707**). Using normal cloth or paper is prohibited. They are not lint-free and could contaminate the fuel circuit. Each cloth should only be used once.

Use fresh cleaning agent for each operation (used cleaning agent is contaminated). Pour it into an uncontaminated container.

For each operation, use a clean brush in good condition (the brush must not shed its bristles).

Use a brush and cleaning agent to clean the unions to be opened.

Blast compressed air over the cleaned parts (tools, workbench, the parts, unions and injection system zones). Check that no bristles remain.

Wash your hands before and during the operation if necessary.

When wearing leather protective gloves cover them with latex gloves to prevent contamination.

III - Instructions to be followed when carrying out any work

As soon as the circuit is open, all openings must be plugged to prevent impurities from entering the system. The plugs to be used are available from the Parts Department. The plugs must not be reused under any circumstances.

Seal the pouch shut, even if it has to be opened shortly afterwards. Ambient air carries contamination.

All components removed from the injection system must be stored in a hermetically sealed plastic bag once they have been plugged.

Using a brush, cleaning agent, air gun, sponge or normal cloth is strictly prohibited once the circuit has been opened. These items could allow contamination to enter the system.

A new component replacing an old one must not be removed from its packaging until it is to be fitted to the vehicle.

GETtheMANUALS.org

The high pressure injection system is designed to deliver a precise quantity of diesel fuel to the engine at a set moment.

It is fitted with a **BOSCH 128-track** computer, **type EDC15C3**.

The system comprises:
- on engines fitted with a CP3 high pressure pump, a priming bulb or electric priming pump on the low pressure circuit,
- on engines fitted with a CP1 high pressure pump, an electric low pressure pump,
- a diesel filter,
- a CP1 or CP3 high pressure pump,
- a solenoid valve mounted to the pump that regulates the high pressure,
- an injector rail,
- a fuel pressure sensor built into the rail,
- four solenoid injectors,
- a diesel temperature sensor,
- a coolant temperature sensor,
- an upstream air temperature sensor,
- a cylinder reference sensor,
- an engine speed sensor,
- a turbocharger pressure sensor,
- an EGR solenoid valve,
- an accelerator pedal potentiometer,
- an atmospheric pressure sensor integrated into the injection computer,
- an air flowmeter,
- a turbocharging limiter solenoid valve,
- a damper valve or inlet flap solenoid valve,
- a swirl or turbulence flap solenoid valve.

The **common rail** direct high pressure injection system works sequentially (based on the petrol engine multipoint injection).

This injection system reduces operating noise, reduces the volume of pollutant gases and particles and produces high engine torque at low engine speeds thanks to a pre-injection procedure.

The high pressure pump generates the high pressure and transmits it to the injector rail. The actuator located on the pump controls the quantity of diesel fuel supplied, according to the requirement determined by the computer. The rail supplies each injector through a steel pipe.

GETtheMANUALS.org

Computer

This determines the injection pressure value necessary for the engine to operate correctly and controls the pressure regulator accordingly. It checks that the pressure value is correct by analysing the value transmitted by the pressure sensor mounted on the rail.
It determines the injection timing required to deliver the right quantity of diesel fuel and the moment when injection should start.
It electrically controls each injector individually after determining these two values.

The flow injected into the engine is determined by:
- the duration of injector control,
- the rail pressure (regulated by the computer),
- the needle stroke (determined by a constant for the type of injector),
- the nominal hydraulic flow of the injector (specific to each injector).

The computer manages:
- idling regulation,
- exhaust gas flow reinjection to the inlet,
- fuel supply check (advance, flow and rail pressure),
- the fan assembly control,
- the air conditioning (cold loop function),
- supply and control of the thermoplungers,
- the cruise control/speed limiter function,
- pre/postheating control,
- fault warning lights via the multiplex network.

The high pressure pump is supplied at low pressure by an integrated low pressure pump (transfer pump).
It supplies the rail, whose pressure is controlled by the fuel flow actuator for charging, and by the injector valves for discharging. This compensates for pressure drops. The flow actuator allows the high pressure pump to supply the exact quantity of diesel fuel required to maintain the pressure in the rail.
This component minimises the heat generated and improves engine output.
In order to discharge the rail using the injector valves, the valves are controlled by brief electrical pulses which are:
- short enough not to open the injector (passing through the feedback circuit from the injectors),
- long enough to open the valves and discharge the rail.

GETtheMANUALS.org

Renault vehicles are equipped with multiplex electronic systems. These systems enable dialogue between the various vehicle computers. As a result:

- the fault warning lights on the instrument panel are activated via the multiplex network,
- there is no vehicle speed sensor in the gearbox,
- the vehicle speed signal on the instrument panel is transmitted by the ABS computer to the injection computer via a wire connection and is then transmitted over the multiplex network by the instrument panel,
- the injection computer and the airbag computer are the main users of the vehicle speed signal.

Some vehicles have a presence sensor mounted in the filter for detecting water in the diesel. If there is water present in the diesel fuel, the injection and pre/postheating fault warning light comes on.

WARNING
The engine must not operate with:

- diesel fuel containing more than 10% diester,
- petrol, even in tiny quantities.

The system can inject diesel fuel into the engine at a pressure of up to **1350 bar**. Before each operation, check that the injector rail is depressurised and that the fuel temperature is not too high.
When working on the high pressure injection system, you must follow the cleanliness guidelines and safety advice specified in this document.

Dismantling the interior of the pump and injectors is forbidden. Only the fuel flow actuator, the diesel fuel temperature sensor and the venturi can be replaced.

For safety reasons, it is strictly prohibited to undo a high pressure pipe union when the engine is running.

It is not possible to remove the pressure sensor from the fuel rail because this may cause circuit contamination faults. If the pressure sensor fails, the pressure sensor, the rail and the five high pressure pipes must be replaced.

It is strictly forbidden to remove any injection pump pulley bearing the number 070 575. If the pump needs to be replaced, replace the pulley.

Supplying **+ 12 V** directly to any component of the system is prohibited.

Ultrasound descaling and cleaning are prohibited.

Never start the engine unless the battery is connected correctly.

Disconnect the injection computer when carrying out any welding work on the vehicle.

GETtheMANUALS.org

Cold loop air conditioning management

The air conditioning system is the cold loop type. The injection computer is responsible for:
- authorising requests for cold air according to refrigerant fluid pressure, engine coolant temperature and engine speed,
- requesting activation of the fan unit according to the vehicle speed, the refrigerant pressure and the engine coolant temperature.

The air conditioning system is authorise

d by the injection computer **2 to 8 seconds** after the engine is started.

Compressor activation may be inhibited in accordance with the following conditions.

Engine speed	Vehicle speed	Accelerator pedal unit
less than 3000 ± 100 rpm	less than 66 ± 1 mph (110 ± 2 km/h)	major change of position (rapid variation)
less than 2250 ± 100 rpm	less than 12 ± 2 mph (20 ± 3 km/h)	position greater than 46 ± 2 %
less than 675 ± 50 rpm	...	throttle release

Cruise control management

The cruise control function, when activated, maintains the vehicle at a preselected speed, regardless of the driving conditions encountered. Using the control buttons, the driver can increase or decrease the vehicle speed.

The cruise control function can be deactivated either using the control buttons, or by switching off the cruise control function selection switch or when system events are detected (such as the brake or clutch pedal being depressed), or when system errors are detected such as an inconsistent vehicle speed or excessive vehicle deceleration.

The cruise control function can also be temporarily suspended when the driver wants to resume control of the vehicle and exceed the selected cruising speed by depressing the accelerator pedal which then exceeds the selected fuel flow. The cruising speed is resumed when the driver releases the accelerator pedal.

It is possible to reactivate cruise control and to return to the last cruising speed after the function has been deactivated for whatever reason, during the same cycle of use (computer supply voltage not cut off). The vehicle will then attempt to return to the cruising speed using a controlled vehicle acceleration rate.

The driver has the following controls to operate the cruise control function:
- Accelerator pedal.
- Brake pedal.
- Clutch pedal.
- Function selector switch to select the cruise control operating mode.
- Instrument panel controls.

GETtheMANUALS.org

Indicator/warning light management

– **Instrument panel display**

The computer manages the data display on the instrument panel relating to engine operation. This includes 5 functions: OBD warning light, pre-postheating, coolant temperature and engine faults: Level 1 (non-critical fault) and Level 2 (emergency stop).
These five functions are represented by 3 indicator/warning lights or messages displayed by the trip computer.

– **Pre-postheating warning light**

This light is used both as an in-operation indicator light and as a system fault indicator:
– Continuously lit with + after ignition feed: indicates that the heater plugs are operating.
– Continuously lit, with the "faulty injection" message: indicates a Level 1 fault (indicating reduced operating efficiency and a restricted safety level. The user must carry out repairs as soon as possible).

– **Temperature/emergency stop warning light**

This indicator light is used both as an in-operation indicator light and as a system fault warning light. It lights up for **3 seconds** when the ignition is switched on (automatic test procedure managed by the instrument panel):
– Continuously lit: indicates engine overheating (the driver remains free to stop the vehicle or not).
– Continuously lit, with the "Engine stop" message: indicates a level 2 fault (In this case, injection is automatically shut off after a few seconds).

– **Excess pollution OBD orange warning light**

Symbolised by an engine, it lights up for approximately **3 seconds** when the ignition is switched on. This warning light may also come on when driving if the system detects an OBD fault.

GETtheMANUALS.org

Connector A (grey), 32 tracks

Track	Description
A1	Not used
A2	Programming* return signal
A3	Load potentiometer 2 earth
A4	Multiplex line L network signal (passenger compartment)
B1	Heated windscreen signal
B2	Programming* control
B3	Load potentiometer 1 earth
B4	Multiplex line H network signal (passenger compartment)
C1	Load potentiometer 1 signal
C2	Not used
C3	Diagnostic line K
C4	Not used
D1	Not used
D2	On/off* - control
D3	Diagnostic line L
D4	Rev counter signal
E1	Load potentiometer 1 power supply
E2	Clutch switch input
E3	Fuel flow signal
E4	Vehicle speed signal
F1	Load potentiometer 2 signal
F2	On/off* + control
F3	Brake pedal switch + signal
F4	Air conditioning inhibition output
G1	Fuel pump relay control
G2	Software lock (depending on engine type)
G3	Not used
G4	Air conditioning recirculation input
H1	Water in diesel fuel sensor signal
H2	Load potentiometer 2 power supply
H3	Not used
H4	Coolant temperature alert output

Connector B (brown), 48 tracks

Track	Description
A1	CAN H network signal (engine)
A2	Not used
A3	Refrigerant sensor supply
A4	Not used
B1	CAN L network signal (engine)
B2	Exhaust gas recirculation valve position potentiometer earth
B3	Heater plug set 1 fault finding
B4	Not used
C1	Turbocharger pressure sensor signal
C2	Exhaust gas recirculation valve position potentiometer signal
C3	Preheating control relay
C4	Not used
D1	Rail pressure sensor signal
D2	Not used
D3	Air temperature sensor signal
D4	Main supply relay control or immobiliser input
E1	Coolant temperature sensor earth
E2	Not used
E3	+ after ignition feed
E4	Not used
F1	Refrigerant sensor earth
F2	Exhaust gas recirculation valve position potentiometer supply
F3	Thermoplunger no. 2 relay coil control
F4	Not used
G1	Fuel temperature sensor earth
G2	Air flowmeter supply
G3	Engine speed sensor + signal
G4	Refrigerant sensor signal

* cruise control

GETtheMANUALS.org

Connector B (brown), 48 tracks (continued)

Track	Description
H1	Not used
H2	Rail pressure sensor supply
H3	Engine speed sensor - signal
H4	Air flow sensor signal
J1	Not used
J2	Turbocharger pressure sensor supply
J3	Fuel temperature sensor signal
J4	Not used
K1	Not used
K2	Not used
K3	Coolant temperature sensor signal
K4	+ Reversing lights switch
L1	Fuel flow actuator control
L2	Turbocharging pressure regulator control
L3	Power earth 1
L4	Power earth 3
M1	Exhaust gas recirculation solenoid valve control
M2	After relay + battery feed 1
M3	After relay + battery feed 2
M4	Power earth 2

Connector C (black), 48 tracks

Track	Description
A1	Fuel pump relay coil control
A2	Low-speed fan relay control
A3	Air flowmeter earth
A4	Turbocharging pressure sensor earth
B1	Not used
B2	Not used
B3	Rail pressure sensor earth
B4	High-speed fan relay control
C1	Camshaft sensor earth
C2	Not used
C3	Not used
C4	Not used
D1	Not used
D2	Not used
D3	Not used
D4	Not used
E1	Not used
E2	Not used
E3	Not used
E4	Thermoplunger no. 3 relay control
F1	Not used
F2	Not used
F3	Not used
F4	Inlet flap solenoid valve control
G1	Not used
G2	Not used
G3	Not used
G4	Not used

GETtheMANUALS.org

Connector C (black), 48 tracks (continued)

Track	Description
H1	Not used
H2	Not used
H3	Not used
H4	Swirl flap solenoid valve control.
J1	Not used
J2	Not used
J3	Not used
J4	Thermoplunger no. 1 relay coil control
K1	Not used
K2	Not used
K3	Not used
K4	Camshaft sensor signal
L1	Injector 4 command
L2	Injector 3 feed
L3	Injector 2 feed
L4	Injector 2 command
M1	Injector 1 command
M2	Injector 3 command
M3	Injector 1 feed
M4	Injector 4 feed

GETtheMANUALS.org

COMPUTER REPLACEMENT OR REPROGRAMMING

There are two steps that must be carried out when the computer is replaced or reprogrammed: **SC003 Save computer data** and **SC001 Write saved data**.

Use **SC003 before the computer is replaced or reprogrammed**. This enables certain data to be saved **in the diagnostic tool** so that the new computer* can be reconfigured like the old one. The data saved is: injector codes, EGR programming, vehicle options and idle speed correction.

Run **SC001 after the computer is replaced or reprogrammed**. It enables you to rewrite the data (saved by command **SC003**) to the new computer*.

If you cannot establish dialogue with the computer being replaced: you will not be able to save anything. After replacing the computer, reconfigure it manually according to its equipment level or parameters, using the special commands.

SC002: enter injector codes,

CF028: climate control,

CF030: thermoplungers,

VP007, VP011: Idle speed adjustment.

Exhaust gas recirculation valve data is programmed automatically the 1st time the new computer is switched on*.

* *new computer or exiting reprogramming!*

PROCEDURE

- **Before replacing or reprogramming the computer:**
  - Select **SC003 SAVE COMPUTER DATA**.
  - If the following message appears: **backup file exists, do you want to overwrite?**:

(this file corresponds to the last save carried out on the tool)

Select **YES**.

When the backup is complete, replace the computer or reprogram, then proceed to the next step.

- **After replacing or reprogramming the computer:**

Select **SC001 WRITE SAVED DATA**

Follow the instructions.

When the command is finished, switch off the ignition.

Wait for the immobiliser warning light to flash (a few seconds) and switch on the ignition again.

Establish dialogue and clear the fault memory.

End of procedure.

GETtheMANUALS.org

REPLACING THE EXHAUST GAS RECIRCULATION VALVE (EGR valve)

From Vdiag 14, the fault monitoring program on the exhaust gas recirculation valve has changed.

To do this, the computer must store the offset of the new valve (at 0 mph) and the offset measured when the ignition was last switched off (in the power-latch* phase), which corresponds to the valve closing. Using this data, the computer can detect whether the valve is clogged or seized.

When the valve is replaced, clear the stored offsets so that the program uses the new valve's offset value.

The data associated with this program is compiled in the **EMISSION CONTROL/OBD** function.
- **ET272 FIRST EGR OFFSET PROGRAMMING** = *Completed or not completed*.
- **PR128 FIRST EGR VALVE OFFSET** = 0.75 V < x < 1.5 V (manufacturing variance).
- **PR129 LAST EGR VALVE OFFSET** > or = **PR128**.
- **PR051 EGR VALVE POSITION FEEDBACK** (very close to **PR129**, when the valve is closed).

Programming **PR128** and **PR129** must be cleared every time the exhaust gas recirculation valve is replaced.

Procedure to be followed **after replacing the** exhaust gas recirculation valve:

Select the **CLEAR** menu, then **RZ002 EGR Adaptives**.

Note:
When the command has finished, the **EMISSION CONTROL/OBD function** *displays*:
ET272: not completed *PR128 and PR129 = 0.00 V* *PR022 = 0.75 V <x <1.5 V*

When the command is completed, switch off the ignition.
Wait for the end of the power latch*.

The offset is automatically reinitialised the next time the ignition is switched on.

Note:
When the reinitialisation is complete, the **EMISSION CONTROL/OBD** function displays:
ET272: completed *0.75 V < PR128 = PR129 = PR022 < 1.5 V*

End of operation.

* The immobiliser warning light will flash a few seconds after the ignition is switched off.

GETtheMANUALS.org

INJECTOR REPLACEMENT

- Please observe the cleanliness guidelines and safety advice.
- When fitting the injector, do not put any strain on it (see the procedure in the Repair Manual).
- The stored injector codes are displayed on the *Identification* screen and in the *CURRENT* column of the Special command: **SC002 ENTER INJECTOR CODES**.
- To find out if the IMA function is operational:

– **ET104 Injector code operation** on the main screen which displays **YES** if the computer includes IMA programming.

Procedure for programming the injector codes

– Read the **6-character* alphanumeric** code(s) etched on the upper section of the Bakelite body of the injector(s).
– Select **SC002 ENTER INJECTOR CODES**.
– On the CLIP tool, follow the instructions given when the help button (depicted as a book) is clicked on.
– When the command has finished, the modified code(s) is/are displayed in the **CURRENT** column.
– If necessary, clear fault **DF276 Injector code programming**: 1.DEF.

*Note:
– The letters **Q** and **J** and the numbers **0** and **9** are not used in IMA coding.
– Each code must be allocated to the cylinder on which the injector is fitted!
– Cylinder no. 1 is located at the flywheel end.

GETtheMANUALS.org

Summary of available configurations

NOTES	The configurations are performed to configure the vehicle computer according to the options available on the vehicle.

VP007: **Reducing the idling speed**

VP011: **Increasing the idling speed**

IMPORTANT
This configuration can lead to customer complaints if it is used incorrectly.

IMPORTANT

CF028: **Air conditioning**

This configuration is used to configure the computer for a vehicle fitted with air conditioning.

CF030: **Thermoplungers**

This configuration is used to configure the computer for a vehicle which is equipped with thermoplungers.

GETtheMANUALS.org

Summary of available configuration readings

NOTES	Configuration readings are used to check the status of the configurations made.

LC005: Gearbox type

(BVM or BVA) Manual or automatic
This configuration reading indicates whether the vehicle is fitted with a manual gearbox or automatic transmission.

LC009: Air conditioning

This configuration reading is directly linked to the CF028 configuration.

LC048: Turbulence flap option reading

WITH OR WITHOUT
This configuration reading shows whether the engine is fitted with turbulence flaps.

LC056: Thermoplungers

This configuration reading is directly linked to the CF030 configuration.

LC065: Water in diesel fuel sensor

WITH OR WITHOUT
This configuration reading indicates whether the engine is fitted with a water in diesel fuel detector.

GETtheMANUALS.org

WARNING LIGHT MANAGEMENT

Management of instrument panel warning lights according to the faults notified.

Faults	Hexadecimal DTC codes	Level 1 fault warning light (Orange heater plugs "on" indicator light)	Level 2 fault warning light (Red overheating warning light)	No warning light on	OBD warning light lit (Vdiag 18)
DF001 Coolant temperature sensor circuit	1801	-	-	CC.0/CO.1/ 1.DEF	-
DF002 Air temperature sensor circuit	1802	-	-	CC.0/CO.1	-
DF017 Preheating unit control circuit	1816	-	-	CC.1/CO.0	-
DF037 Immobiliser	183E	1.DEF/2.DEF	-	-	-
DF038 Computer	183F	1.DEF	-	-	1.DEF
DF040 Cylinder 1 injector circuit	182E	1.DEF	2.DEF	-	2.DEF
DF041 Cylinder 2 injector circuit	182F	1.DEF	2.DEF	-	2.DEF
DF042 Cylinder 3 injector circuit	1830	1.DEF	2.DEF	-	2.DEF
DF043 Cylinder 4 injector circuit	1831	1.DEF	2.DEF	-	2.DEF
DF046 Battery voltage	182A	-	-	1.DEF/2.DEF	-
DF056 Air flow sensor circuit	1806	1.DEF	-	CO.0/CC.1/ 2.DEF	-
DF057 Water in diesel fuel detector signal	188C	1.DEF	-		-
DF070 Clutch switch circuit	1829	-	-	1.DEF	-
DF098 Fuel temperature sensor circuit	1805	-	-	CC.0/CO.1	-
DF176 Low speed fan assembly circuit	1817	-	-	CC.1/CO.0	-
DF186 Heater plug circuit	1826	-	-	1.DEF	-

GETtheMANUALS.org

WARNING LIGHT MANAGEMENT

Management of instrument panel warning lights according to the faults notified.

Faults	Hexadecimal DTC codes	Level 1 fault warning light (Orange heater plugs "on" indicator light)	Level 2 fault warning light (Red overheating warning light)	No warning light on	OBD warning light lit (Vdiag 18)
DF192 Fuel pressure sensor circuit	1809	-	CC.0/CO.1/ 1.DEF	-	-
DF195 Engine speed/ camshaft sensor consistency	1808	3.DEF/4.DEF	2.DEF	1.DEF	-
DF196 Pedal sensor circuit gang 1	180A	CO.0/CC.1/ 1.DEF	-	2.DEF	-
DF197 Fuel pressure information	1882	-	1.DEF/2.DEF/ 3.DEF/4.DEF/ 5.DEF	-	-
DF198 Pedal sensor circuit gang 2	180B	CO.0/CC.1/ 1.DEF/2.DEF	-	-	-
DF199 Turbocharging pressure sensor	1804	CO.0/CC.1/ 1.DEF/2.DEF	-	-	-
DF200 Atmospheric pressure sensor	1803	-	-	1.DEF/ 2.DEF	-
DF207 Low pressure pump relay circuit	1820	-	-	CC.1/CO.0	-
DF208 Fuel pressure solenoid valve circuit	1822	-	CC.1/CO.0	1.DEF	-
DF209 EGR valve position sensor circuit	180C	1.DEF/2.DEF/ 3.DEF	-	CO.0/CC.1/ 4.DEF	CO.0/CC.1/ 1.DEF/2.DEF/ 3.DEF/4.DEF
DF210 After ignition key signal	182B	1.DEF	-	-	-
DF213 Flywheel signal information consistency	1807	-	-	1.DEF	-
DF215 Analogue/digital converter	1880	1.DEF	-	-	-
DF216 Sensor supply voltage no. 1	180F	1.DEF/2.DEF	-	-	-

GETtheMANUALS.org

WARNING LIGHT MANAGEMENT

Management of instrument panel warning lights according to the faults notified.

Faults	Hexadecimal DTC codes	Level 1 fault warning light (Orange heater plugs "on" indicator light)	Level 2 fault warning light (Red overheating warning light)	No warning light on	OBD warning light lit (Vdiag 18)
DF217 Sensor supply voltage no. 2	1810	1.DEF/2.DEF	-	-	-
DF218 Microcontroller	1885	-	1.DEF/2.DEF	-	-
DF222 Main relay	1813	1.DEF/2.DEF	-	-	-
DF225 Voltage stabiliser	1888	-	1.DEF/2.DEF	-	-
DF226 Damper valve circuit	1889	CO.0	-	CC.1	-
DF227 Swirl flap	1824	1.DEF/CO.0	-	CC.1	-
DF228 Brake signal	1828	-	-	1.DEF	-
DF234 Cruise control/speed limiter function	182C	-	-	1.DEF/ 2.DEF/3.DEF	-
DF238 Thermoplunger no. 3 relay circuit	1836	-	-	CC.1/CO.0	-
DF239 Thermoplunger no. 2 relay circuit	1835	-	-	CC.1/CO.0	-
DF240 Thermoplunger no. 1 relay circuit	1834	-	-	CC.1/CO.0	-
DF253 Flow during self-test after ignition switched off	183A	-	-	1.DEF	-
DF276 Injector code programming	188B	1.DEF/2.DEF	-	-	-
DF301 Air inlet circuit	1815	CC.1/CO.0 1.DEF/2.DEF	-	-	-
DF325 Exhaust gas recirculation function	1814	2.DEF/1.DEF/ 3.DEF/4.DEF	1.DEF	CC.1/CO.0/ 1DEF	1.DEF
DF374 Computer	1886	-	1.DEF/2.DEF	-	-
DF436 Detection of engine misfiring	183B	1.DEF/2.DEF 3.DEF/4.DEF	-	-	-

GETtheMANUALS.org

DF001 PRESENT OR STORED	COOLANT TEMPERATURE SENSOR CIRCUIT CC.0: Short circuit to earth CO.1: Open circuit or short circuit to + 12 volts 1.DEF: Coolant operating temperature not attained

NOTES	**Conditions for applying the fault finding procedure to stored faults for CC.0 or CO.1:** If the fault is declared present after the fault is cleared and a delay of **1 min** with the engine running.
	Special notes: Use bornier **Elé. 1681** for all operations on the connectors of the engine management computer. Measure the actual temperature and compare it to the one displayed on the tool **PR064 Coolant temperature**.

CC.0	***NOTES***	None.

Check the coolant temperature sensor connections.
check the engine management computer connections.
Repair if necessary.

Measure the **resistance** of the coolant temperature sensor between terminals **2** and **3** of its connector.
Replace the sensor if the resistance is not: **2252 Ω ± 112 at + 25˚C**
811 Ω ± 39 at +50˚C
283 Ω ± 8 at 80˚C

Check the **insulation** to **earth** of the connection between:

Engine computer, **connector B track K3** → **track 3** coolant temperature sensor connector

Check **the continuity of the connection** between:

Engine computer **connector B track E1** → **track 2** coolant temperature sensor connector

AFTER REPAIR	Deal with any other faults. Clear the fault memory. Switch off the ignition and carry out a road test followed by a test with the **diagnostic tool**.

GETtheMANUALS.org

DF001 **CONTINUED 1**	

CO.1	***NOTES***	None.

Check the coolant temperature sensor connections.
check the engine management computer connections.
Repair if necessary.

Measure the **resistance** of the coolant temperature sensor between terminals **2** and **3** of its connector.
Replace the sensor if the resistance is not: **2252 Ω ± 112 at + 25˚C**
811 Ω ± 39 at +50˚C
283 Ω ± 8 at 80˚C

Check the **insulation** to **earth** of the connection between:

Engine computer, **connector B track K3** → **track 3** coolant temperature sensor connector

Check **the continuity of the connection** between:

Engine computer **connector B track E1** → **track 2** coolant temperature sensor connector

AFTER REPAIR	Deal with any other faults. Clear the fault memory. Switch off the ignition and carry out a road test followed by a test with the **diagnostic tool**.

GETtheMANUALS.org

DF001 **CONTINUED 2**	

1.DEF	***NOTES***	**Conditions for applying the fault finding procedure to stored faults:** If the fault is declared present after: – the engine is started, – a **4 minute** delay when the engine has been running.
		Special notes: Use a workshop temperature sensor to compare the values.

Check the coolant temperature sensor connections.
check the engine management computer connections.
Repair if necessary.

Measure the **resistance** of the coolant temperature sensor between terminals **2** and **3** of its connector.
Replace the sensor if the resistance is not: **2252 Ω ± 112 at + 25˚C**
811 Ω ± 39 at +50˚C
283 Ω ± 8 at 80˚C

G9T and F9Q engines:
Check the insulation to **earth** of the connection between:

Engine computer, **connector B track K3** ⟶ **track 3** coolant temperature sensor connector

Check the insulation from the **+ 12 V feed** of the connection between:

Engine computer, **connector B track E1** ⟶ **track 2** coolant temperature sensor connector

Check the **continuity and absence of interference resistance** on the following connections:

engine computer, **connector B track E1** ⟶ **track 2** coolant temperature sensor connector

engine computer, **connector B track K3** ⟶ **track 3** coolant temperature sensor connector

Carry out the required operations if the resistance is abnormally high.

If the fault is still present, check that the **thermostat** is working correctly.
Check that the cooling circuit is correctly filled and sealed.
If necessary, see the Workshop Repair Manual **MR 395 Mechanics, 19A Cooling, Removal - Refitting of thermostat**.
Carry out the necessary repairs.

AFTER REPAIR	Deal with any other faults. Clear the fault memory. Switch off the ignition and carry out a road test followed by a test with the **diagnostic tool**.

GETtheMANUALS.org

DF002 PRESENT OR STORED	AIR TEMPERATURE SENSOR CIRCUIT CC.0: Short circuit to earth CO.1: Open circuit or short circuit to + 12 V

NOTES	**Conditions for applying the fault finding procedure to stored faults:** If the fault is declared present after a delay of **2 minutes** with the engine running.
	Special notes: Use bornier **Elé. 1681** for all operations on the connectors of the engine management computer.

CC.0	***NOTES***	None.

Check the air flowmeter connections.
check the engine management computer connections.
Repair if necessary.

Measure the **resistance** of the air temperature sensor between **tracks 1 and 2** of the air flow sensor:
Replace the air flowmeter if the resistance is not: **3714 Ω ± 161 at + 10 °C**
2448 Ω ± 90 at + 20°C
1671 Ω ± 59 at + 30°C

With the air flow sensor disconnected, check **the insulation** in relation to **earth** of the connection between:

Engine computer, **connector B track D3** → **track 1** of the air flowmeter connector

Check **for + 5 V** on **track 3** of the air flowmeter connector.

AFTER REPAIR	Deal with any other faults. Clear the fault memory. Switch off the ignition and carry out a road test followed by a test with the **diagnostic tool**.

GETtheMANUALS.org

DF002 **CONTINUED**	

CO.1	***NOTES***	**Priority when dealing with a number of faults:** In the event of the simultaneous presence of fault **DF056 Air flow sensor circuit CO.0 or 2.DEF**, check that the air flow sensor connector is connected correctly.

Check the air flowmeter connections.
check the engine management computer connections.
Repair if necessary.

Measure the **resistance** of the air temperature sensor between **tracks 1 and 2** of the air flow sensor:
Replace the air flowmeter if the resistance is not: **3714 Ω ± 161 at + 10 ˚C**
2448 Ω ± 90 at + 20˚C
1671 Ω ± 59 at + 30˚C

Check **the continuity and insulation** from **+ 12 V** of the following connections:

Engine computer, **connector B track D3** → **track 1** air flowmeter connector

Engine computer, **connector C track A3** → **track 2** air flowmeter connector

AFTER REPAIR	Deal with any other faults. Clear the fault memory. Switch off the ignition and carry out a road test followed by a test with the **diagnostic tool**.

GETtheMANUALS.org

DF017 PRESENT OR STORED	PRE-POSTHEATING UNIT CONTROL CIRCUIT CC.1: Short circuit to + 12 V CO.0: Open circuit or short circuit to earth

NOTES	**Conditions for applying the fault finding procedure to stored faults:** If the fault becomes present following actuation of the relay by the **AC037 Preheating relay** command.
	Special notes: Use bornier **Elé. 1681** for all operations on the connectors of the engine management computer.

CC.1	***NOTES***	None.

Check the pre-postheating unit connections.
check the engine management computer connections.
Repair if necessary.

Check **for insulation** from **+ 12 V** feed on the connection between:

Engine computer, **connector B track C3** → **track 8** of the preheating unit connector

Check **the continuity and absence of interference resistance** on the connection between:

Engine management computer, **connector B track B3** → **track 9** preheating unit connector

If the fault is still present, replace the pre-postheating unit.

CO.0	***NOTES***	None.

Check the pre-postheating unit connections.
check the engine management computer connections.
Repair if necessary.

Check **the continuity and insulation** to **earth** of the connection between:

Engine computer, **connector B track C3** → **track 8** of the preheating unit connector

Check the **continuity and absence of interference resistance** on the connection between:

Engine management computer, **connector B track B3** → **track 9** preheating unit connector

Check for **+ 12 V battery** on **track 3** of the preheating unit connector.
If the fault is still present, replace the pre-postheating unit.

AFTER REPAIR	Deal with any other faults. Clear the fault memory. Switch off the ignition and carry out a road test followed by a test with the **diagnostic tool**.

GETtheMANUALS.org

DF037 PRESENT OR STORED	ENGINE IMMOBILISER 2.DEF: Engine immobiliser code fault

NOTES	**Conditions for applying fault finding procedures to stored faults:** Apply the fault finding procedure whether the fault is present or stored.

1.DEF	***NOTES***	None.

Perform **fault finding on the multiplex network** in order to ascertain if there are any faulty multiplex connections. Repair if necessary (**see 88B, Multiplex**).

Using the diagnostic tool, check the **UCH** and ensure that it has **correctly learnt its immobiliser code**. **Reconfigure** the UCH if necessary.

Carry out a starting test: if the vehicle does not start, **switch off the ignition and wait 15 seconds** (self-supply period of the computer) then try to start the engine again.
If the fault is still present, repeat the operation three times.

If the fault is still present, contact the Techline.

2.DEF	***NOTES***	None.

Display status **ET341 Immobiliser code programmed**.
If the status is **NO**, Check the immobiliser function and repeat from the start.

If the status is **YES**, clear the fault from the computer memory.
Switch off the ignition, then switch it on again to initialise the computer.

If the fault recurs, contact the Techline.

AFTER REPAIR	Deal with any other faults. Clear the fault memory. Switch off the ignition and carry out a road test followed by a test with the **diagnostic tool**.

GETtheMANUALS.org

DF038 PRESENT OR STORED	COMPUTER 1.DEF: Fault in EEPROM

NOTES	None.

If the fault is **stored** or **present**, clear the fault from the computer memory.
Switch off the ignition, wait until the end of power latch* then switch the ignition back on and re-establish dialogue.

If the fault recurs, contact the Techline.

AFTER REPAIR	Deal with any other faults. Clear the fault memory. Switch off the ignition and carry out a road test followed by a test with the **diagnostic tool**.

GETtheMANUALS.org

DF040 PRESENT OR STORED	CYLINDER 1 INJECTOR CIRCUIT 1.DEF: Overcurrent on injector control current 2.DEF: Undercurrent on the injector control current

NOTES	**Conditions for applying the fault finding procedure to stored faults:** If the fault becomes present following an engine start.
	Special notes: Use bornier **Elé. 1681** for all operations on the connectors of the engine management computer.
	IMPORTANT – please observe the cleanliness guidelines and safety advice.

1.DEF	***NOTES***	None.

Check the connections on injector no 1.
check the engine management computer connections.
Repair if necessary.

Measure the **resistance** of injector no. 1.
Replace the injector if there is a **short circuit (R = 0 Ω)**.

Check the insulation between the following two connections:

Engine computer, connector **C track M1** → **track 2** of the injector no. 1 connector

Engine computer, connector **C track M3** → **track 1** of the injector no. 1 connector

Check insulation to **earth** of the following connection:

Engine computer, connector **C track M3** → **track 1** of the injector no. 1 connector

If the fault is still present: apply **test 10 Poor injector operation**.

AFTER REPAIR	Deal with any other faults. Clear the fault memory. Switch off the ignition and carry out a road test followed by a test with the **diagnostic tool**.

GETtheMANUALS.org

DF040 **CONTINUED**	

2.DEF	***NOTES***	None.

Check the connections on injector no 1.
check the engine management computer connections.
Repair if necessary.

Measure the **resistance** of injector no. 1.
Replace the injector if it is **in short circuit (resistance is measured to infinity)**.

Check the continuity of the following connections:

Engine computer, connector **C track M1** → **track 2** of the injector no. 1 connector

Engine computer, connector **C track M3** → **track 1** of the injector no. 1 connector

If the fault is still present: apply **test 10 Poor injector operation**.

AFTER REPAIR	Deal with any other faults. Clear the fault memory. Switch off the ignition and carry out a road test followed by a test with the **diagnostic tool**.

GETtheMANUALS.org

DF041 PRESENT OR STORED	CYLINDER 2 INJECTOR CIRCUIT 1.DEF: Overcurrent on injector control current 2.DEF: Undercurrent on the injector control current

NOTES	**Conditions for applying the fault finding procedure to stored faults:** If the fault becomes present following an engine start.
	Special notes: Use bornier **Elé. 1681** for all operations on the connectors of the engine management computer.
	IMPORTANT – please observe the cleanliness guidelines and safety advice.

1.DEF	***NOTES***	None.

Check the connections on injector no. 2.
check the engine management computer connections.
Repair if necessary.

Measure the **resistance** of injector no. 2.
Replace the injector if there is a **short circuit (R = 0 Ω)**.

Check the insulation between the following two connections:

Engine computer, **connector C track L4** → **track 2** of the injector no. 2 connector

Engine computer, **connector C track L3** → **track 1** of the injector no. 2 connector

Check insulation to **earth** of the following connection:

Engine computer, connector **C track L3** → **track 1** of the injector no. 2 connector

If the fault is still present: apply **test 10 Poor injector operation**.

AFTER REPAIR	Deal with any other faults. Clear the fault memory. Switch off the ignition and carry out a road test followed by a test with the **diagnostic tool**.

GETtheMANUALS.org

DF041 **CONTINUED**	

2.DEF	***NOTES***	None.

Check the connections on injector no. 2.
check the engine management computer connections.
Repair if necessary.

Measure the **resistance** of injector no. 2.
Replace the injector if it is **in short circuit (resistance is measured to infinity)**.

Check the continuity of the following connections:

Engine computer, connector **C track L4** → **track 2** of the injector no. 2 connector

Engine computer, connector **C track L3** → **track 1** of the injector no. 2 connector

If the fault is still present: apply **test 10 Poor injector operation**.

AFTER REPAIR	Deal with any other faults. Clear the fault memory. Switch off the ignition and carry out a road test followed by a test with the **diagnostic tool**.

GETtheMANUALS.org

DF042 PRESENT OR STORED	CYLINDER 3 INJECTOR CIRCUIT 1.DEF: Overcurrent on injector control current 2.DEF: Undercurrent on the injector control current

NOTES	**Conditions for applying the fault finding procedure to stored faults:** If the fault becomes present following an engine start.
	Special notes: Use bornier **Elé. 1681** for all operations on the connectors of the engine management computer.
	IMPORTANT – please observe the cleanliness guidelines and safety advice.

1.DEF	***NOTES***	None.

Check the connections on injector no. 3.
check the engine management computer connections.
Repair if necessary.

Measure the **resistance** of injector no. 3.
Replace the injector if there is a **short circuit (R = 0 Ω)**.

Check the insulation between the following two connections:

Engine computer, **connector C track M2** → **track 2** of the injector no. 3 connector

Engine computer, **connector C track L2** → **track 1** of the injector no. 3 connector

Check insulation to **earth** of the following connection:

Engine computer, connector **C track L2** → **track 1** of the injector no. 3 connector

If the fault is still present: apply **test 10 Poor injector operation**.

AFTER REPAIR	Deal with any other faults. Clear the fault memory. Switch off the ignition and carry out a road test followed by a test with the **diagnostic tool**.

GETtheMANUALS.org

DF042 **CONTINUED**	

2.DEF	***NOTES***	None.

Check the connections on injector no. 3.
check the engine management computer connections.
Repair if necessary.

Measure the **resistance** of injector no. 3.
Replace the injector if it is **in short circuit (resistance is measured to infinity)**.

Check the continuity of the following connections:

Engine computer, connector **C track M2** → **track 2** of the injector no. 3 connector

Engine computer, connector **C track L2** → **track 1** of the injector no. 3 connector

If the fault is still present: apply **test 10 Poor injector operation**.

AFTER REPAIR	Deal with any other faults. Clear the fault memory. Switch off the ignition and carry out a road test followed by a test with the **diagnostic tool**.

GETtheMANUALS.org

DF043 PRESENT OR STORED	CYLINDER 4 INJECTOR CIRCUIT 1.DEF: Overcurrent on injector control current 2.DEF: Undercurrent on the injector control current

NOTES	**Conditions for applying the fault finding procedure to stored faults:** If the fault becomes present following an engine start.
	Special notes: Use bornier **Elé. 1681** for all operations on the connectors of the engine management computer.
	IMPORTANT – please observe the cleanliness guidelines and safety advice.

1.DEF	***NOTES***	None.

Check the connections on injector no 4.
check the engine management computer connections.
Repair if necessary.

Measure the **resistance** of injector No. 4.
Replace the injector if there is a **short circuit (R = 0 Ω)**.

Check the insulation between the following two connections:

Engine management computer, **connector C track L1** → **track 2** of the injector no. 4 connector

Engine computer, **connector C track M4** → **track 1** of the injector no. 4 connector

Check insulation to **earth** of the following connection:

Engine computer, connector **C track M4** → **track 1** of the injector no. 4 connector

If the fault is still present: apply **test 10 Poor injector operation**.

AFTER REPAIR	Deal with any other faults. Clear the fault memory. Switch off the ignition and carry out a road test followed by a test with the **diagnostic tool**.

GETtheMANUALS.org

DF043 **CONTINUED**	

2.DEF	***NOTES***	None.

Check the connections on injector no 4.
check the engine management computer connections.
Repair if necessary.

Measure the **resistance** of injector No. 4.
Replace the injector if it is **in short circuit (resistance is measured to infinity)**.

Check the continuity of the following connections:

Engine computer, connector **C track L1** → **track 2** of the injector no. 4 connector

Engine computer, connector **C track M4** → **track 1** of the injector no. 4 connector

If the fault is still present: apply **test 10 Poor injector operation**.

AFTER REPAIR	Deal with any other faults. Clear the fault memory. Switch off the ignition and carry out a road test followed by a test with the **diagnostic tool**.

GETtheMANUALS.org

DF046 PRESENT OR STORED	BATTERY VOLTAGE 1.DEF: Battery undervoltage 2.DEF: Battery voltage too high

NOTES	**Conditions for applying the fault finding procedure to stored faults:** If the fault is declared present after: – starting the engine, – a **30 second** delay with the engine running.
	Special notes: If necessary, carry out a complete check of the charging circuit, referring to **Technical Note 6014A Charge circuit fault finding**.

1.DEF	***NOTES***	None.

Reminder on computer operating voltage: **9 V < operating voltage < 14.5 V**.
– Using a voltmeter, take a reading of the battery voltage at its terminals.
– Then compare this with the value displayed on your diagnostic tool in the parameter menu **PR071 Computer supply voltage**.

If there is no difference:

Recharge and test the battery and replace it if it is defective.
Next check the charge circuit.

If there is a difference:
– Check the tightness and the condition of the battery terminals.
– Using the appropriate wiring diagram:

Check the **continuity and for the absence of interference resistance** on the following connections:

+ 12 V battery feed ⟶ tracks **M2** and **M3** of engine management computer connector **B** (via the engine fuse then the **normally open contact** of the central injection unit supply relay).

Battery earth ⟶ tracks **L3, L4, M4** of engine management computer connector **B**.

Carry out the necessary repairs.

2.DEF	***NOTES***	None.

Check the charging circuit, apply **Technical Note 6014A**.
Carry out the necessary repairs.

AFTER REPAIR	Deal with any other faults. Clear the fault memory. Switch off the ignition and carry out a road test followed by a test with the **diagnostic tool**.

GETtheMANUALS.org

DF056 PRESENT OR STORED	AIR FLOWMETER CIRCUIT CO.0: Open circuit or short circuit to earth CC.1: Short circuit to + 12 V 1.DEF: Sensor supply fault 2.DEF: Inconsistent data

NOTES	**Conditions for applying the fault finding procedure to stored faults:** If the fault becomes present after: – ignition is cut-off until the end of the power latch* phase, – the ignition is switched on, or – Vdiag 14, 18 and 1C: a delay of **1 minute** engine running at idle speed with a coolant temperature **> 60˚C**. – Vdiag 10: a delay of **5 minutes** engine running at idle speed with a coolant temperature **> 60˚C**.
	Special notes: Use bornier **Elé. 1681** for all operations on the connectors of the engine management computer.

CO.0	***NOTES***	**Priorities when dealing with a number of faults:** In the event of the simultaneous presence of fault **DF002 Air temperature sensor circuit CO.1**, check that the air flow sensor connector is connected correctly.

Check the air flowmeter connections.
check the engine management computer connections.
Repair if necessary.

Check the **continuity and insulation** to **earth** of the following connection:

Engine computer, **connector B track H4** ⟶ **track 5** of the air flow sensor connector

Check for the **+ 5 V** feed on **track 3** of the air flow sensor connector.
Check **the following insulations:**
- between **tracks 5 and 6** of the air flowmeter connector,
- between **tracks 2 and 5** of the air flow sensor connector.

Carry out the necessary repairs.

With the flow sensor **connected, the vehicle ignition on** and **the engine stopped**:
Check the voltage between **tracks 2** and **5** of the air flowmeter.
– If the voltage is not approximately **0.6 V ± 0.1**, replace the air flowmeter.

Remove the air flowmeter.
– Apply **test 5 Air flowmeter**.

***** The immobiliser warning light will flash a few seconds after the ignition is switched off.

AFTER REPAIR	Deal with any other faults. Clear the fault memory. Switch off the ignition and carry out a road test followed by a test with the **diagnostic tool**.

GETtheMANUALS.org

DF056 **CONTINUED 1**	

CC.1	***NOTES***	None.

Check the air flowmeter connections.
Check the engine management computer connections.
Repair if necessary.

Check **the insulation** against **+ 12 V** of the connection between:

Engine computer, **connector B track H4** → **track 5** of air flow sensor connector

Check the continuity of the following connection:

Engine computer, **connector C track A3** → **track 2** of the air flowmeter connector

If the fault is still present, replace the air flowmeter.

1.DEF	***NOTES***	**Priorities when dealing with a number of faults:** Use the interpretation of fault **DF216 Sensor feed voltage no. 1** first if it is present or stored.

Check the air flowmeter connections.
Check the engine management computer connections.
Repair if necessary.

Check the **insulation and continuity** of the connection between:

Engine computer, connector **B track G2** → **track 3** air flowmeter connector

Check the following **insulations**:
- between **tracks 3 and 6** of the air flow sensor connector,
- between **tracks 3 and 2** of the air flow sensor connector,
- between **tracks 3 and 4** of the air flow sensor connector.

Check for the **+ 12 V after relay** feed on **track 4** of the air flow sensor connector.
Check the presence of the following **earths:**

Electronic (coming from the electronic unit) → on **track 2** of the air flowmeter connector

Chassis (body) → on **track 6** of the air flowmeter connector

If the fault is still present, replace the air flowmeter.

AFTER REPAIR	Deal with any other faults. Clear the fault memory. Switch off the ignition and carry out a road test followed by a test with the **diagnostic tool**.

GETtheMANUALS.org

DF056 **CONTINUED 2**	

2.DEF	***NOTES***	**Conditions for applying the fault finding procedure to stored faults:** If the fault is declared present after: – starting the engine, an increase in temperature at idle speed exceeding **60˚C** followed by a delay of **40 seconds** or, – if it reappears as stored after clearing the fault, starting the engine, switching the ignition off, followed by the end of the power latch* phase and switching the ignition on.

Check the air flowmeter connections.
Check the engine management computer connections.
Repair if necessary.

Check **the continuity and insulation** of the connections between:

Engine computer, **connector B track G2** → **track 3** air flowmeter connector

Engine computer, **connector B track H4** → **track 5** of air flow sensor connector

Check for the **+ 5 V** feed on **track 3** of the air flow sensor connector.
Check for the **+ 12 V after relay** feed on **track 4** of the air flow sensor connector.
Check for **an earth** on **track 6** of the air flow sensor connector.
Use the interpretation of parameter **PR132 Air flow** explained in this note, at warm idle speed (coolant temperature > **80˚C**).
Carry out the necessary repairs.

● **Check the entire air inlet circuit:** apply **test 4**:
– Air filter unit inlet not blocked and filter not clogged.
– **No** foreign bodies on the air flow sensor grille (**visual inspection only**).
Otherwise, replace the air flowmeter.
– Oil vapour recirculation circuit connection conformity.
– **Low** and **high pressure** air circuit **sealed** and **not obstructed**: Pipes, mounting clamps present and tightened, turbocharger pressure sensor fitted, heat exchanger etc.

– Check that the damper valve is open (valve control **rests on the body** of the air vent unit).
– Check that the turbulence flap is in the rest position (**AC013 Turbulence flap**, step B), if fitted to the vehicle.
With the flow sensor **connected**, the vehicle **ignition on** and **engine stopped**:
– Check the voltage between **tracks** 2 and **5** of the air flow sensor,
If the value is not **0.6 V ± 0.1**, replace the air flow sensor.
Check the exhaust gas recirculation valve operation:
Apply **test 9**, part A.

* The immobiliser warning light will flash a few seconds after the ignition is switched off.

AFTER REPAIR	Deal with any other faults. Clear the fault memory. Switch off the ignition and carry out a road test followed by a test with the **diagnostic tool**.

GETtheMANUALS.org

DF057 PRESENT OR STORED	WATER IN DIESEL FUEL DETECTOR CIRCUIT 1.DEF: Open circuit on the line or water in diesel fuel

NOTES	**Fault finding procedure application conditions:** Present or stored fault. **IMPORTANT** **please observe the cleanliness guidelines and safety advice.**

Check that there is no water in the fuel filter. Bleed the fuel filter and the low and high pressure diesel circuit if necessary.
Check for **continuity and the absence of interference resistance** on the connection between:

Engine management computer, **connector A track H1** ⟶ **track 3** of the water detection sensor

– **Check the power supply** to the water detection sensor:

+ 12 V after relay ⟶ **track 1** of the water detection sensor

earth ⟶ **track 2** of the water detection sensor

– Carry out the necessary repairs.

A) Make sure the water in diesel fuel detection sensor is properly connected.
– If not, clear the fault.
– Carry out a road test (speed > **12 mph (20 km/h)** and engine speed > **1200 rpm**) for more than **30 seconds**.
– If the fault does not recur*, end the fault finding procedure.*
– If the fault does recur, go to **step B**.

B) If the sensor is correctly connected:
– Bleed the diesel filter unit ((For Vel-Satis ph1: see MR 353 Mechanical systems, 13A, Fuel supply), (for Vel-Satis ph2: see MR 402 Mechanical Systems, 13A, Fuel supply), (for Laguna II ph1: see MR 339 Mechanical Systems, 13A, Fuel supply - Diesel system), (for Espace IV ph1: see MR 361 Mechanical Systems,13A, Fuel Supply)).
– Clear the fault.
– Start the vehicle (engine speed > **750 rpm**) and wait **60 seconds** at idle speed to confirm the repair.
– If the fault does not recur*, end the fault finding procedure.*
– ensure that the correct fuel is being used.
– Run **test 12 Diesel fuel conformity check**.

See following page.

AFTER REPAIR	Deal with any other faults. Clear the fault memory. Switch off the ignition and carry out a road test followed by a test with the **diagnostic tool**.

GETtheMANUALS.org

DF057 **CONTINUED**	

If none of these checks reveal any faults:

– Replace the water detection sensor (see Workshop Repair Manual, section **13A**).
– Clear the fault.
– Start the vehicle (engine speed > 750 rpm) and wait **60 seconds** at idle speed to confirm the repair.

Note:
When the water level in the fuel filter unit is below the sensor electrodes, some driving conditions (turning, a slope) may cause ***erratic activation of the injection fault warning light*** *(in fact, the sensor's off-centre position in the fuel filter unit, combined with the driving condition factors, triggers the water detection, causing the light to come on).*

AFTER REPAIR	Deal with any other faults. Clear the fault memory. Switch off the ignition and carry out a road test followed by a test with the **diagnostic tool**.

GETtheMANUALS.org

DF068 PRESENT OR STORED	SWIRL FLAP CONTROL CIRCUIT CC.1: Short circuit to + 12 V 1.DEF: Permanent low level 2.DEF: Inconsistency

NOTES	**Conditions for applying the fault finding procedure to CC.1 stored:** If the fault becomes present after running actuator command **AC013 Swirl flap**.
	Special notes: – Use bornier **Elé. 1681** for all operations on the connectors of the engine management computer.

CC.1	***NOTES***	None.

Check the swirl flap solenoid valve connections.
check the engine management computer connections.
Repair if necessary.

Measure the **resistance** of the swirl flap solenoid valve coil between **tracks 1** and **2**.
Replace the solenoid valve if its resistance is not approximately: **46 Ω ± 3 at + 25˚C**.

Check **the insulation** against **+ 12 V** of the connection between:

Engine management computer, **connector C** → **track 1** of the solenoid valve connector

Track H4

If the fault is still present, replace the swirl flap solenoid valve.

AFTER REPAIR	Deal with any other faults. Clear the fault memory. Switch off the ignition and carry out a road test followed by a test with the **diagnostic tool**.

GETtheMANUALS.org

DF068 **CONTINUED 1**	

1.DEF	***NOTES***	None.

Check the swirl flap solenoid valve connections.
check the engine management computer connections.
Repair if necessary.

Measure the **resistance** of the swirl flap solenoid valve coil between **tracks 1** and **2**.
Replace the solenoid valve if its resistance is not approximately: **46 Ω ± 3 at + 25˚C**.

Check the **continuity** and **insulation** to **earth** of the connection between:

Engine management computer, **connector C** **Track H4** → **track 1** of the solenoid valve connector

If the fault is still present, replace the swirl flap solenoid valve.

2.DEF	***NOTES***	None.

Check the swirl flap solenoid valve connections.
check the engine management computer connections.
Repair if necessary.

Clear the stored fault.
Use actuator command **AC013 Swirl flap** and check that the flap is working properly.
If the fault reappears after the command, replace the swirl flap.
If the swirl flap is correct, check the conformity of the air inlet circuit: apply **test 4: Turbocharged air inlet circuit test**.

If the fault is still present, contact the Techline.

AFTER REPAIR	Deal with any other faults. Clear the fault memory. Switch off the ignition and carry out a road test followed by a test with the **diagnostic tool**.

GETtheMANUALS.org

DF070 STORED	CLUTCH SWITCH CIRCUIT 1.DEF: Inconsistency of the signal

1.DEF	***NOTES***	**Conditions for applying the fault finding procedure to stored faults:** If the fault becomes present during a road test at speeds above **60 mph (100 km/h))**.
		Special notes: Use bornier **Elé. 1681** bornier for all operations on the connector of the engine management computer.

Check the clutch switch connections.
check the engine management computer connections.
Repair if necessary.

Step 1

A) - Check status **ET233 CLUTCH PEDAL**. Depress the clutch pedal and note whether this status becomes **DEPRESSED**.

If it changes to DEPRESSED.

Clear the fault, switch off the ignition, wait for the end of the power latch* and switch on the ignition again. Carry out a road test and then take a fault reading. If the fault reappears, go to step 2. If not, end of fault finding.

If it does not change to DEPRESSED.

B) - Check the switch adjustment.

– Check **the continuity and insulation** to **earth** of the connection between:

Engine computer, **connector A track E2** ⟶ **track 1** clutch switch

– Check for an **earth** on **track B3** of the clutch switch.

Repair if necessary.

Check the operation of the clutch switch:

Closing of the contact between **tracks 1 and 2** when the clutch pedal is pressed.

Opening of the contact between **tracks 1 and 2** when the clutch pedal is released.

Replace the switch if necessary.

When repair is complete, return to step **A**.

Note:

Status **ET233 CLUTCH PEDAL** displays **NONE** if the vehicle is fitted with an automatic gearbox or a sequential gearbox.

Step 2

– If the fault recurs, contact the Techline.

* The immobiliser warning light will flash a few seconds after the ignition is switched off.

AFTER REPAIR	Deal with any other faults. Clear the fault memory. Switch off the ignition and carry out a road test followed by a test with the **diagnostic tool**.

GETtheMANUALS.org

DF098 PRESENT OR STORED	FUEL TEMPERATURE SENSOR CIRCUIT CC.0: Short circuit to earth CO.1: Open circuit or short circuit to + 12 V

NOTES	**Conditions for applying the fault finding procedure to stored faults:** If the fault is declared present after a delay of **2 minutes** with the engine running.
	Special notes: Use bornier **Elé. 1681** for all operations on the connectors of the engine management computer.

CC.0	***NOTES***	None.

Check the fuel temperature sensor connections.
check the engine management computer connections.
Repair if necessary.

Measure the **resistance** of the fuel temperature sensor between **tracks 1** and **2**:
Replace the sensor if its resistance is not: **3820 Ω ± 282 at + 10˚C**
2050 Ω ± 100 at + 25˚C
810 Ω ± 47 at + 50˚C

Check the **insulation** against **earth** of the connection between:

Engine computer, **connector B track J3** ⟶ **track 1** fuel temperature sensor connector

AFTER REPAIR	Deal with any other faults. Clear the fault memory. Switch off the ignition and carry out a road test followed by a test with the **diagnostic tool**.

GETtheMANUALS.org

DF098 **CONTINUED**	

CO.1	***NOTES***	None.

Check the fuel temperature sensor connections.
Check the computer connections.
Repair if necessary.

Measure the **resistance** of the fuel temperature sensor between its **tracks 1 and 2**:
Replace the sensor if its resistance is not: **3820 Ω ± 282 at + 10˚C**
2050 Ω ± 100 at + 25˚C
810 Ω ± 47 at + 50˚C

Check **the continuity and insulation** from **+ 12 V** of the following connections:

Engine computer, connector **B track J3** → **track 1** fuel temperature sensor connector

Engine computer, connector **B track G1** → **track 2** fuel temperature sensor connector

AFTER REPAIR	Deal with any other faults. Clear the fault memory. Switch off the ignition and carry out a road test followed by a test with the **diagnostic tool**.

GETtheMANUALS.org

DF176 PRESENT OR STORED	LOW-SPEED FAN ASSEMBLY CIRCUIT CC.1: Short circuit to + 12 V CO.0: Open circuit or short circuit to earth

NOTES	**Conditions for applying the fault finding procedure to stored faults:** The fault reappears after: – clearing the fault from the memory, – actuation of the relay by the **AC038 Low speed fan assembly relay** command.
	Special notes: – Use bornier **Elé. 1681** for all operations on the connector of the engine management computer. – Please refer to the Technical Note **Wiring diagrams** for your vehicle to locate the fuses and relays concerned.

CC.1	***NOTES***	None.

Check the connections of the low-speed fan assembly relay mounting. check the engine management computer connections. Repair if necessary.
Measure **the resistance** of the low-speed fan assembly relay coil. Replace the relay if its resistance is not: **60 Ω± 5 at + 20˚C**.
Remove the low-speed relay and check **for insulation** from **+ 12 V** on the connection between: Engine computer, **connector C track A2** ⟶ **track 11** of the low speed fan assembly relay

CO.0	***NOTES***	None.

Check the connections of the low-speed fan assembly relay mounting. check the engine management computer connections. Repair if necessary.
Measure **the resistance** of the low-speed fan assembly relay coil. Replace the relay if its resistance is not: **60 Ω ± 5 at + 20˚C**.
Remove the low-speed relay and check **the continuity and insulation** to earth of the connection between: Engine computer, **connector C track A2** ⟶ **11** of the low speed fan assembly relay **Check for + 12 V after relay** feed on **track 10** of the low speed fan assembly relay.

AFTER REPAIR	Deal with any other faults. Clear the fault memory. Switch off the ignition and carry out a road test followed by a test with the **diagnostic tool**.

GETtheMANUALS.org

DF186 PRESENT OR STORED	HEATER PLUG CIRCUIT 1.DEF: Heater plug(s) faulty or in open circuit

NOTES	**Conditions for applying the fault finding procedure to stored faults:** The fault reappears after: – clearing the fault from the memory, – controlling the heater plugs using command **AC037 Preheating relay**.
	Special notes: Use bornier **Elé. 1681** for all operations on the connectors of the engine management computer. – see the **Wiring diagrams** Technical Note for the vehicle to locate the fuses and relays concerned.
	IMPORTANT – please observe the cleanliness guidelines and safety advice.

1.DEF	***NOTES***	**Priority when dealing with a number of faults:** Firstly, deal with **DF216 Supply voltage No. 1 of the sensors** if this is present.

Check the pre-postheating unit connections.
Check the connections on all the heater plugs.
Repair if necessary.

– Measure **the resistance** of the heater plugs:
  Replace the plug if its resistance is **> 2 Ω**.
– Check the **continuity** of the following connections:

preheating unit **track 1** → **cylinder 3** heater plug

preheating unit **track 2** → **cylinder 4** heater plug

preheating unit **track 6** → **cylinder 1** heater plug

preheating unit **track 7** → **cylinder 2** heater plug

– **Check for** the **+ 12 V battery feed** on **track 3** of the preheating relay (via maxi fuse).
– Check the engine earthing.

See following page.

AFTER REPAIR	Deal with any other faults. Clear the fault memory. Switch off the ignition and carry out a road test followed by a test with the **diagnostic tool**.

GETtheMANUALS.org

DF186 **CONTINUED**	

check the engine management computer connections.
Check the **continuity and absence of interference resistance** on the connection (preheating relay unit control line) between:

Engine management computer, **connector B track B3** → **track 9** preheating unit connector

Check each heater plug current on F9Q engines:
– With the engine stopped, disconnect the coolant temperature sensor (change to defect mode).
– **Warning: defect mode causes the engine cooling fans to operate.**
– Start the engine.
– 5 to 10 seconds later, check the current in one heater plug with a current clamp (**Voltmeter/ammeter** menu on the Clip Technic tool or using a separate current clamp).
– Replace the heater plug if the current is **< 8.5 A** and **> 13 A**.
– Do the same for the three other heater plugs.
– Switch off the engine.
– Reconnect the coolant temperature sensor.
– Clear the faults.
If the fault is still present, contact the Techline.

AFTER REPAIR	Deal with any other faults. Clear the fault memory. Switch off the ignition and carry out a road test followed by a test with the **diagnostic tool**.

GETtheMANUALS.org

DF192 PRESENT OR STORED	FUEL PRESSURE SENSOR CIRCUIT CC.0: Short circuit to earth CO.1: Open circuit or short circuit to + 12 V 1.DEF: Sensor supply fault

NOTES	**Conditions for applying the fault finding procedure to stored faults:** If the fault is declared present after a delay of **5 minutes** with the engine running.
	Special notes: Use bornier **Elé. 1681** for all operations on the connectors of the engine management computer.
	IMPORTANT – **Checks on the ohmmeter are not authorised for the fuel pressure sensor.** – please observe the cleanliness guidelines and safety advice.

CC.0	***NOTES***	None.

Check the fuel pressure sensor connections.
check the engine management computer connections.
Repair if necessary.

Check the **insulation** to **earth** of the connection between:

Engine computer, **connector B track D1** → **track 2** of the fuel pressure sensor connector

Check **the continuity of the connection** between:

Engine computer, **connector B track H2** → **track 3** of the fuel pressure sensor connector

If the fault is still present, replace the fuel pressure sensor.

AFTER REPAIR	Deal with any other faults. Clear the fault memory. Switch off the ignition and carry out a road test followed by a test with the **diagnostic tool**.

GETtheMANUALS.org

DF192 **CONTINUED 1**	

CC.1	***NOTES***	None.

Check the fuel pressure sensor connections.
check the engine management computer connections.
Repair if necessary.

Check **the continuity and the insulation** against **+12 V** of the connection between:

Engine management computer, connector **B** **track D1** → **track 2** of the fuel pressure sensor connector

Check **the continuity of the connection** between:

Engine management computer, connector **C** **track B3** → **track 1** of the fuel pressure sensor connector

If the fault is still present, replace the fuel pressure sensor.

AFTER REPAIR	Deal with any other faults. Clear the fault memory. Switch off the ignition and carry out a road test followed by a test with the **diagnostic tool**.

GETtheMANUALS.org

DF192 **CONTINUED 2**	

1. DEF	***NOTES***	**Priorities when dealing with a number of faults:** Firstly, apply the interpretation of the **DF216 Sensor supply voltage no. 1** fault, if it is present.

Check the fuel pressure sensor connections.
check the engine management computer connections.
Repair if necessary.

Check the **continuity and absence of interference resistance** on the following connections:

Engine computer, **connector B track D1** → **track 2** of the fuel pressure sensor connector

Engine computer, **connector B track H2** → **track 3** of the fuel pressure sensor connector

Engine computer, **connector C track B3** → **track 1** of the fuel pressure sensor connector

Carry out the necessary repairs.
If all these connections are correct, check there is a fuel pressure sensor power supply:

+ 5 V → **track 3** of the fuel pressure sensor connector

Earth → **track 1** of the fuel pressure sensor connector

If the connections and supplies are correct, replace the fuel pressure sensor.

AFTER REPAIR	Deal with any other faults. Clear the fault memory. Switch off the ignition and carry out a road test followed by a test with the **diagnostic tool**.

GETtheMANUALS.org

DF195 PRESENT OR STORED	CAMSHAFT SENSOR / ENGINE SPEED CONSISTENCY 1.DEF: Feed fault, signal interference, camshaft sensor internal fault 2.DEF: Absence of engine speed signal or interference on engine speed signal 3.DEF: Engine speed signal interference, broken tooth on flywheel or engine speed sensor internal fault 4.DEF: Absence of camshaft signal or timing fault (belt tension or setting)

NOTES	**Conditions for applying the fault finding procedure to stored faults:** The fault is declared present after: – **10 seconds** with the starter active, or – a delay of **1 minute** with the engine running.
	Special notes: – Use bornier **Elé. 1681** for any operations on the computer connector. – Check the charge circuit (see **Technical Note 6014A Charge circuit fault finding**) and check the stability of the charging voltage using an oscilloscope. – Interference could be caused by the alternator or starter motor. If it is possible to start the vehicle by pushing it, one of these components could be involved.

1.DEF	***NOTES***	**Priorities when dealing with a number of faults:** Firstly, apply the interpretation of fault **DF046 Battery voltage**, if it is present.

Check **the continuity and presence** of feed between **tracks 1 and 3** of the **camshaft sensor** connector:

+ 12 V after relay → **Track 3** of the camshaft sensor connector

Earth → **track 1** of the camshaft sensor connector

Check **the continuity and absence of interference resistance** on the connection between:

Engine management computer, **connector C track K4** → **track 2** of the camshaft sensor connector

Repair if necessary.

Display the conformity of the camshaft signal using an oscilloscope: square pulse signal, amplitude: **battery voltage - 50 mV** (for your information, if V bat = 12.6 V, the amplitude is 12.54 V).
If the check reveals interference, check the conformity of the engine earths (oxidation, tightness, etc.).
If the fault is still present, check that the sensor is correctly fitted and in good condition (overheating).
If necessary replace the sensor.

AFTER REPAIR	Deal with any other faults. Clear the fault memory. Switch off the ignition and carry out a road test followed by a test with the **diagnostic tool**.

GETtheMANUALS.org

DF195 **CONTINUED 1**	

2.DEF	***NOTES***	None.

Check the **engine speed sensor** connections.
Check the engine management computer connections.
Repair if necessary.

Measure **the resistance** of the engine speed sensor between **tracks A and B on F9Q engines**.
Replace the sensor if its resistance is not **800 Ω ± 80 at + 20˚C**.
Measure **the resistance** of the engine speed sensor between **tracks 1 and 2 on G9T engines**.
Replace the sensor if its resistance is not **235 Ω ± 35 at + 23˚C**.

Check **the continuity** of the following connections **on F9Q engines**:

Engine computer, **connector B track G3** ⟶ **track A** of the engine speed sensor

Engine computer, **connector B track H3** ⟶ **track B** of the engine speed sensor

Check the **continuity** of the following connections on **G9T/G9U engines**:

Engine computer, **connector B track G3** ⟶ **track** 1 of the engine speed sensor

Engine computer, **connector B track H3** ⟶ **track 2** of the engine speed sensor

Check that the engine earthing is in order (oxidation, tightness, etc.).
Check the mounting, the air gap (if necessary refer to the information in the Workshop Repair Manuals for the vehicle) and the condition of the sensor (overheating).
During the starting phase, display **PR055 Engine speed** and check that there is no interference (micro-breaks).
Replace if necessary.

AFTER REPAIR	Deal with any other faults. Clear the fault memory. Switch off the ignition and carry out a road test followed by a test with the **diagnostic tool**.

GETtheMANUALS.org

DF195 **CONTINUED 2**	

3.DEF	***NOTES***	None.

Check the **engine speed sensor** connections.
Check the engine management computer connections.
Repair if necessary.

Measure **the resistance** of the engine speed sensor between **tracks A and B on F9Q engines**.
Replace the sensor if its resistance is not **800 Ω ± 80 at 20˚C**.
Measure the **resistance** of the engine speed sensor between **tracks 1 and 2 on G9T/G9U engines**.
Replace the sensor if its resistance is not **235 Ω ± 35 at + 23˚C**.

Check that the engine earthing is in order (oxidation, tightness, etc.).
Check **the continuity** of the following connections **on F9Q engines**:

Engine computer, **connector B track G3** → **track A** of the engine speed sensor

Engine computer, **connector B track H3** → **track B** of the engine speed sensor

Check the **continuity** of the following connections on **G9T/G9U engines**:

Engine computer, **connector B track G3** → **track** 1 of the engine speed sensor

Engine computer, **connector B track H3** → **track 2** of the engine speed sensor

Perform a visual inspection of the flywheel and the target (broken tooth, damaged tooth, warped flywheel).
Check that the engine speed signal is correct using an oscilloscope: no interference, broken tooth, etc.
Carry out the necessary repairs.

AFTER REPAIR	Deal with any other faults. Clear the fault memory. Switch off the ignition and carry out a road test followed by a test with the **diagnostic tool**.

GETtheMANUALS.org

DF195 **CONTINUED 3**	

4.DEF	***NOTES***	None.

Check the camshaft sensor connections.
Check the engine management computer connections.
Repair if necessary.

Check the **continuity** of the following connections:

Engine computer, **connector C track K4** → **track 2** of the camshaft sensor connector

Engine management computer, **connector C track C1** → **track 1** of the camshaft sensor connector

Check **for + 12 V after relay feed** on **track 3** of the camshaft sensor connector.

– Check the tension of the **timing belt**.
– Check the conformity of the camshaft sprocket/camshaft assembly.
– Check the timing adjustment.
On **G9T engines** and if working on the timing gear: **camshaft/high-pressure pump:**
– Make sure the high pressure pump sprocket has been properly refitted.
Carry out the necessary repairs.

AFTER REPAIR	Deal with any other faults. Clear the fault memory. Switch off the ignition and carry out a road test followed by a test with the **diagnostic tool**.

GETtheMANUALS.org

DF196 PRESENT OR STORED	PEDAL SENSOR CIRCUIT GANG 1 CO.0 : Open circuit or short circuit to earth CC.1 : Short circuit to + 12 V 1.DEF: Sensor supply fault 2.DEF: Inconsistent signal

NOTES	**Conditions for applying the fault finding procedure to stored faults:** If the fault is declared present following a series of actions on the accelerator pedal at full load or with no load.
	Special notes: Use bornier **Elé. 1681** for all operations on the connectors of the engine management computer. see the **Wiring diagrams** Technical Note for the vehicle to locate the **electrical connections and connectors** concerned.

CO.0	***NOTES***	**Priorities when dealing with a number of faults:** In the event of the simultaneous presence of fault **DF198 Pedal sensor circuit gang 2 CO.0**, check that the pedal sensor connector is connected correctly.

Check the pedal sensor connections.
Check the engine management computer connections.
Repair if necessary.

Measure the **resistance** of the pedal sensor gang 1 between **tracks 2 and 4**.
Replace the sensor if the resistance is not **1.2 kΩ ± 0.48 at + 20˚C**.

Check **the continuity and insulation** to **earth** of the connection between:

Engine computer, **connector A track C1** → **track 3** of the pedal sensor connector

Also check that this connection is **insulated** against the following connections:

Engine computer, **connector A track B3** → **track 2** of the pedal sensor connector

Engine computer, **connector A track A3** → **track 1** of the pedal sensor connector

Check **the continuity of the connection** between:

Engine computer, connector **A track E1** → **track 4 of the** pedal sensor connector

AFTER REPAIR	Deal with any other faults. Clear the fault memory. Switch off the ignition and carry out a road test followed by a test with the **diagnostic tool**.

GETtheMANUALS.org

DF196 **CONTINUED 1**	

CC.1	***NOTES***	None.

Check the pedal sensor connections.
Check the engine management computer connections.
Repair if necessary.

Measure the **resistance** of the pedal sensor gang 1 between **tracks 2 and 4**.
Replace the sensor if the resistance is not **1.2 kΩ ± 0.48 at + 20˚C**.

Check **for insulation** from **+ 12 V** feed on the connection between:

Engine computer, **connector A track C1** → **track 3** of the pedal sensor connector

Check **the continuity of the connection** between:

Engine computer, **connector A track B3** → **track 2** of the pedal sensor connector

1.DEF	***NOTES***	**Priorities when dealing with a number of faults:** Use the interpretation of fault **DF216 Sensor feed voltage no. 1** first if it is present or stored.

Check the pedal sensor connections.
Check the engine management computer connections.
Repair if necessary.

– Check the **continuity and for the absence of interference resistance** on the following connections:

Engine computer, **connector A track E1** → **track 4 of the** pedal sensor connector

Engine computer, **connector A track C1** → **track 3** of the pedal sensor connector

Engine computer, **connector A track B3** → **track 2** of the pedal sensor connector

– Check **the insulation** between the following two connections:

Engine computer, **connector A track E1** → **track 4 of the** pedal sensor connector

Engine computer, **connector A track B3** → **track 2** of the pedal sensor connector

– Also check that they are insulated against **+ 12 V feed**.
– If the fault is still present, carry out an accelerator pedal sensor conformity check.

AFTER REPAIR	Deal with any other faults. Clear the fault memory. Switch off the ignition and carry out a road test followed by a test with the **diagnostic tool**.

GETtheMANUALS.org

DF196 **CONTINUED 2**	

2.DEF	***NOTES***	**Priority when dealing with a combination of faults:** Apply the interpretation of faults **DF 198 Pedal sensor circuit gang 2, 2.DEF and DEF 228 Brake signals** first if they are present or stored.

Check the pedal sensor connections.
Check the engine management computer connections.
Repair if necessary.

Check **the continuity** and **absence of interference resistance** on the following connection:

Engine computer, **connector A track C1** ⟶ **track 3** of the pedal sensor connector

Also **check the insulation from the + 12 V feed.**

If the fault is still present, go to the accelerator pedal sensor conformity check.

AFTER REPAIR	Deal with any other faults. Clear the fault memory. Switch off the ignition and carry out a road test followed by a test with the **diagnostic tool**.

GETtheMANUALS.org

DF197 PRESENT OR STORED	FUEL PRESSURE SIGNAL 1.DEF: Measured pressure too high 2.DEF: Measured pressure too low 3.DEF: Detection of leak at high pressure 4.DEF: Fuel overpressure 5.DEF: Pressure drop in the rail

NOTES	**Conditions for applying the fault finding procedure to stored faults:** The fault is declared present after a delay of **5 minutes** with the engine running at different speeds.
	Special notes: Use bornier **Elé. 1681** for all operations on the connectors of the engine management computer.
	IMPORTANT – **Checks on the ohmmeter are not authorised for the fuel pressure sensor.** – **Please observe the cleanliness guidelines and safety advice.**

1.DEF ***4.DEF***	***NOTES***	**Priority when dealing with a number of faults:** Treat as a priority any other fault that is present or stored.
		Special notes: If the fault follows a period of underpressure, a loop variation or an operation on the pump or unpriming at low pressure, **do not take the fault into account**. Clear the fault. Warm engine: start the engine and leave it running at idle speed **(1 minute)**. If the fault appears, perform the fault finding procedure explained below. Otherwise, carry out a road test at a speed above **3000 rpm** (stay above this value for at least **10 seconds** to display the fault). If the fault recurs, perform the fault finding procedure given below.

Check the fuel pressure sensor connections.
Check the fuel pressure solenoid valve connections.
Check the engine management computer connections.
Repair if necessary.
See following page.

AFTER REPAIR	Deal with any other faults. Clear the fault memory. Switch off the ignition and carry out a road test followed by a test with the **diagnostic tool**.

GETtheMANUALS.org

DF197 **CONTINUED 1**	

Check the following connection for **insulation, continuity and make sure there is no extraneous resistance**:

Engine computer, **connector B track L1** → **track 2** fuel pressure solenoid valve connector

Check **for insulation** against **+ 5 V** on the connection between:

Engine computer, **connector B track D1** → **track 2** fuel pressure sensor connector

Clear the fault.
– Use the **AC035 Fuel pressure solenoid valve** command:
You should be able to feel vibrations on the fuel pressure regulator. Otherwise, go to the fault finding procedure for **AC035**, step 1.
The presence of air in the circuit is likely to lead to this type of fault. Apply test 3.

With the CP3 high pressure pump, check that the **fuel priming pump** is not fed when the engine is running.
Check that there are no air bubbles in the diesel fuel low pressure circuit.
Check the pressure regulating solenoid valve using part B of **ALP7 Rough idle**.
If the fault is still present, replace the high pressure pump.

If the problem is still present, contact the Techline.

AFTER REPAIR	Deal with any other faults. Clear the fault memory. Switch off the ignition and carry out a road test followed by a test with the **diagnostic tool**.

GETtheMANUALS.org

DF197 **CONTINUED 2**	

2.DEF ***3.DEF*** ***5.DEF***	***NOTES***	**IMPORTANT** – **Please observe the cleanliness guidelines and safety advice.**

Check the fuel pressure sensor connections.
Check the fuel pressure solenoid valve connections.
Check the engine management computer connections.
Repair if necessary.

Check **for + 12 V after relay** feed on **track 1** of the fuel pressure solenoid valve.
Check the **insulation, continuity and absence of interference resistance** on the connections between:

Engine computer, **connector B track L1** → **track 2** fuel pressure solenoid valve connector

Engine computer, **connector B track D1** → **track 2** of the fuel pressure sensor connector

Use command **AC035 Fuel pressure solenoid valve**. You should be able to feel vibrations on the fuel pressure solenoid valve. If not, go to interpretation of commands **AC035**, step 1.

With the vehicle ignition on, and engine stopped for over **1 minute**:
– Display **PR038 Rail pressure**.
  – If the value is **less** than **30 bar**, the sensor is correct.
  – If not replace the fuel pressure sensor.

– **Detailed handling of fault finding on the hydraulic circuit:**

Step 1
– Check the connections of the following components:
  * Fuel pressure sensor.
  * Fuel pressure solenoid valve.
  * Computer.
  * Fuel temperature sensor.
  * Diesel fuel filter.
  * Also check the condition of the wiring (wear, kinks, etc.).
– Check that the seal is correctly fitted to the fuel pressure solenoid valve.
If all of the checks reveal no faults, proceed to step 2.

Perform checks on the hydraulic circuit (see following pages).

AFTER REPAIR	Deal with any other faults. Clear the fault memory. Switch off the ignition and carry out a road test followed by a test with the **diagnostic tool**.

GETtheMANUALS.org

DF197 **CONTINUED 3**	

PLEASE OBSERVE THE CLEANLINESS GUIDELINES AND SAFETY ADVICE BEFORE ANY REMOVAL OPERATION.

Checking the fuel Low Pressure system:

Stage 2
Check the Low Pressure circuit: apply **test 3**.
* If the tubes or hoses are worn or damaged, repair them. Otherwise, proceed to stage 3.

Stage 3
– In the event of a correlation between the appearance of the fault and an operation on the fuel filter, rinse the bowl to remove any accumulated impurities.
– Check the condition of the fuel filter:
* If the filter is dirty, replace it. You must clean the fuel filter bowl before fitting the new filter to prevent contamination of the high pressure pump and the high pressure circuit. Go to stage 4.

AFTER REPAIR	Deal with any other faults. Clear the fault memory. Switch off the ignition and carry out a road test followed by a test with the **diagnostic tool**.

GETtheMANUALS.org

DF197 **CONTINUED 4**	

The low pressure circuit has been checked and no faults were detected, otherwise make the necessary repairs.

STAGE 4

– Clear the faults using the CLIP diagnostic tool.
– Start the engine.
– Display **PR038 Rail pressure**.

PR038 > 170 bar when starting?

NO → Check that there are no internal injector leaks using the procedure recommended in **test 10 Poor injector operation**.

Is one of the injectors faulty?

NO → Check that there are no internal leaks in the overpressure valve (with the CP3 high pressure pump only) using the procedure recommended in **test 11 Poor rail overpressure valve operation.**

YES → Replace the faulty injector.

Is the overpressure valve faulty?

NO → Replace* the CP3 high-pressure pump.

YES → Replace the faulty injector rail

YES

Raise the engine temperature so the diesel fuel reaches **50˚C**.
Road test:
Select 3rd or 4th gear, accelerate with your foot to the floor.

Does the engine stall or does the red fault warning light come on?

NO → Contact Techline.

YES → Replace* the CP3 high-pressure pump.

*Note:
Please observe all recommendations made in the repair procedures when removing mechanical and/or electrical components and **observe the cleanliness guidelines and safety advice**.

AFTER REPAIR	Deal with any other faults. Clear the fault memory. Switch off the ignition and carry out a road test followed by a test with the **diagnostic tool**.

GETtheMANUALS.org

DF198 PRESENT OR STORED	PEDAL SENSOR CIRCUIT GANG 2 CO.0 : Open circuit or short circuit to earth CC.1 : Short circuit to + 12 V 1.DEF: Sensor supply fault 2.DEF: Consistency between gang 1 and gang 2

NOTES	**Conditions for applying the fault finding procedure to stored faults:** If the fault is declared present following a series of actions on the accelerator pedal at full load or with no load.
	Special notes: Use bornier **Elé. 1681** for all operations on the connectors of the engine management computer. see the **Wiring diagrams** Technical Note for the vehicle to locate the **electrical connections and connectors** concerned.

CO.0	***NOTES***	**Priorities when dealing with a number of faults:** In the event of the simultaneous presence of the **DF196 Pedal sensor circuit gang 1 CO.0** fault, check that the pedal sensor connector is connected correctly.

Check the pedal sensor connections.
Check the engine management computer connections.
Repair if necessary.

Measure the resistance of pedal sensor gang 2 between **tracks 1 and 5**.
Replace the sensor if the resistance is not: **1.7 kΩ ± 0.68 at + 20˚C**.

Check **the continuity of the connection** between:

Engine computer, **connector A track F1** → **track 6** of the pedal sensor connector

Also check **the insulation** of this connection to **earth** and to the following connections:

Engine computer, **connector A track B3** → **track 2** of the pedal sensor connector

Engine computer, **connector A track A3** → **track 1** of the pedal sensor connector

Check **the continuity of the connection** between:

Engine computer, **connector A track H2** → **track 5** of the pedal sensor connector

AFTER REPAIR	Deal with any other faults. Clear the fault memory. Switch off the ignition and carry out a road test followed by a test with the **diagnostic tool**.

GETtheMANUALS.org

DF198 **CONTINUED 1**	

CC.1	***NOTES***	None.

Check the pedal sensor connections.
Check the engine management computer connections.
Repair if necessary.

Measure the resistance of pedal sensor gang 2 between **tracks 1 and 5**.
Replace the sensor if the resistance is not: **1.7 kΩ ± 0.68 at + 20˚C**.

Check **for insulation** from **+ 12 V** feed on the connection between:

Engine computer, **connector A track F1** ⟶ **track 6** of the pedal sensor connector

Check **the continuity of the connection** between:

Engine computer, **connector A track A3** ⟶ **track 1** of the pedal sensor connector

If the fault is still present, replace the pedal sensor.

1.DEF	***NOTES***	**Priorities when dealing with a number of faults:** Use the interpretation of fault **DF217 Sensor feed voltage No. 2** first if it is present or stored.

Check the pedal sensor connections.
Check the engine management computer connections.
Repair if necessary.

Check the **continuity and for the absence of interference resistance** on the following connections:

Engine computer, **connector A track F1** ⟶ **track 6** of the pedal sensor connector

Engine computer, **connector A track H2** ⟶ **track 5** of the pedal sensor connector

Engine computer, **connector A track A3** ⟶ **track 1** of the pedal sensor connector

Also check that they are insulated against **+ 12 V**.
Check the **insulation** from earth of the connection between:

Engine computer, **connector A track H2** ⟶ **track 5** of the pedal sensor connector

If the fault is still present, replace the pedal sensor.

AFTER REPAIR	Deal with any other faults. Clear the fault memory. Switch off the ignition and carry out a road test followed by a test with the **diagnostic tool**.

GETtheMANUALS.org

DF198 **CONTINUED 2**	

2.DEF	***NOTES***	None.

Check the pedal sensor connections.
Check the engine management computer connections.
Repair if necessary.

Check the **continuity and for the absence of interference resistance** on the following connections:

Engine computer, **connector A track E1** → **track 4 of the** pedal sensor connector

Engine computer, **connector A track C1** → **track 3** of the pedal sensor connector

Engine computer, **connector A track B3** → **track 2** of the pedal sensor connector

Engine computer, **connector A track H2** → **track 5** of the pedal sensor connector

Engine computer, **connector A track F1** → **track 6** of the pedal sensor connector

Engine computer, **connector A track A3** → **track 1** of the pedal sensor connector

Carry out the required operations if the resistance is abnormally high.
If the checks are correct, replace the accelerator pedal sensor.

AFTER REPAIR	Deal with any other faults. Clear the fault memory. Switch off the ignition and carry out a road test followed by a test with the **diagnostic tool**.

GETtheMANUALS.org

DF199 PRESENT OR STORED	TURBOCHARGER PRESSURE SENSOR CO.0: Open circuit or short circuit to earth CC.1: Short circuit to +12 V 1.DEF: Sensor supply fault 2.DEF: Consistency between the turbocharging pressure and the atmospheric pressure

NOTES	**Conditions for applying the fault finding procedure to stored faults:** If the fault is declared present after: – starting the engine or – a road test.
	Special notes: Use bornier **Elé. 1681** for all operations on the connectors of the engine management computer. see the **Wiring diagrams** Technical Note for the vehicle. **WARNING** On some G9 engines, the turbocharging pressure sensor and the air temperature sensor form a single component.

CO.0	***NOTES***	None.

Check the turbocharger pressure sensor connections.
Check the engine management computer connections.
Repair if necessary.

Check **the continuity and insulation** to **earth** of the connection between:

Engine computer, **connector B track C1** → **track B or 3** turbocharging pressure sensor connector

Also check the continuity of the connection between:

Engine computer, **connector B track J2** → **track C or 1** turbocharging pressure sensor connector

Tracks A, B and C of the turbocharging pressure sensor: F9Q 650, F9Q 750, F9Q 752, F9Q 754 engines. Tracks 1, 2 and 3 of the turbocharger pressure sensor: F9Q 751, F9Q 680, F9Q 820, G9T 702, G9T 703, G9T 742 and G9T 743 engines.

If the fault is still present, replace the turbocharger pressure sensor.

AFTER REPAIR	Deal with any other faults. Clear the fault memory. Switch off the ignition and carry out a road test followed by a test with the **diagnostic tool**.

GETtheMANUALS.org

DF199 **CONTINUED 1**	

CC.1	***NOTES***	**Special notes:** This fault appears when the turbocharging pressure is greater than the maximum value of the sensor.

Check the part number of the turbocharger pressure sensor in relation to the engine and the vehicle.
Check the turbocharger pressure sensor connections.
Check the engine management computer connections.
Repair if necessary.

Check **for insulation** from **+ 12 V** feed on the connection between:

Engine computer, **connector B track C1** → **track B or 3** turbocharging pressure sensor connector

Check **the continuity of the connection** between:

Engine computer, **connector C track A4** → **track A or 2** turbocharging pressure sensor connector

Tracks A, B and C of the turbocharging pressure sensor: F9Q 650, F9Q 750, F9Q 752, F9Q 754 engines.
Tracks 1, 2 and 3 of the turbocharger pressure sensor: F9Q 751, F9Q 680, F9Q 820, G9T 702, G9T 703, G9T 742 and G9T 743 engines.

If the fault is still present, refer to the interpretation of parameter **PR041 Turbocharging pressure**.
If **DF199** CC.1 is stored:
– Clear the fault.
– Carry out a road test at full throttle.
– If **DF199** CC.1 Present and then Stored: replace the turbocharging pressure sensor.
● **Check that the control rod of the turbocharger is not jammed:**
– **Apply test 6 for a turbocharger with fixed geometry.**
– **Apply test 7 for a turbocharger with variable geometry.**

AFTER REPAIR	Deal with any other faults. Clear the fault memory. Switch off the ignition and carry out a road test followed by a test with the **diagnostic tool**.

GETtheMANUALS.org

DF199 **CONTINUED 2**	

1.DEF	***NOTES***	**Priorities when dealing with a number of faults:** Firstly, apply the interpretation of the **DF216 Sensor supply voltage no. 1** fault, if it is present or stored.

Check the turbocharger pressure sensor connections.
Check the engine management computer connections.
Repair if necessary.

Check the **insulation, continuity and the absence of interference resistance** on the connections between:

Engine computer, **connector B track C1** → **track B or 3** turbocharging pressure sensor connector

Engine computer, **connector C track A4** → **track A or 2** turbocharging pressure sensor connector

Engine computer, **connector B track J2** → **track C or 1** turbocharging pressure sensor connector

Tracks A, B and C of the turbocharging pressure sensor: F9Q 650, F9Q 750, F9Q 752, F9Q 754, F9Q 760, F9Q 762, F9Q 772 and G9T 710 engines.
Tracks 1, 2 and 3 of the turbocharging pressure sensor: F9Q 751, F9Q 680, F9Q 820, G9T 702, G9T 703, G9T 742, G9T 743 and G9U 730 engines.
If the fault is still present, refer to the interpretation of parameter **PR041 Turbocharging pressure**.

AFTER REPAIR	Deal with any other faults. Clear the fault memory. Switch off the ignition and carry out a road test followed by a test with the **diagnostic tool**.

GETtheMANUALS.org

DF199 **CONTINUED 3**	

2.DEF	***NOTES***	**Priorities when dealing with a number of faults:** Firstly, apply the interpretation of the **DF200 Atmospheric pressure sensor** fault, if it is present.

Check the turbocharger pressure sensor connections.
Check the engine management computer connections.
Repair if necessary.

Check **the continuity and absence of interference resistance** on the connection between:

Engine computer, **connector B track C1** → **track B or 3** turbocharging pressure sensor connector

Carry out the required operations if the resistance is abnormally high.
Tracks A, B and C of the turbocharging pressure sensor: F9Q 650, F9Q 750, F9Q 752, F9Q 754 engines.
Tracks 1, 2 and 3 of the turbocharging pressure sensor: F9Q 751, F9Q 680, F9Q 820, G9T 702, G9T 703, G9T 742, G9T 743 and G9U 730 engines.
If the fault is still present:
Check the sensor mounting and the sealing ring on its seal or hoses (tightness of clip, etc.).
Check the inlet circuit sealing: apply **test 4**.
If the fault is still present, refer to the interpretation of parameter **PR041 Turbocharging pressure**.

AFTER REPAIR	Deal with any other faults. Clear the fault memory. Switch off the ignition and carry out a road test followed by a test with the **diagnostic tool**.

GETtheMANUALS.org

DF200 PRESENT	ATMOSPHERIC PRESSURE SENSOR 1.DEF: Feed voltage too low 2.DEF: Feed voltage too high

1.DEF ***2.DEF***	***NOTES***	**Priorities when dealing with a number of faults:** Apply the interpretation of fault **DF216 Sensor supply voltage no. 1** first if it is present or stored.

The atmospheric pressure sensor is inside the engine management computer, and no repairs are possible. **Simply check that the** engine management computer **air inlet is not blocked**.
If the fault is **present**, contact the Techline.

AFTER REPAIR	Deal with any other faults. Clear the fault memory. Switch off the ignition and carry out a road test followed by a test with the **diagnostic tool**.

GETtheMANUALS.org

DF207 PRESENT OR STORED	LOW PRESSURE PUMP RELAY CIRCUIT CC.1 : Short circuit to + 12 V CO.0 : Open circuit or short circuit to earth

NOTES	**Conditions for applying the fault finding procedure to stored faults:** If the fault is declared present after actuating the relay using command **AC034 Low pressure pump relay**.
	Special notes: Use bornier **Elé. 1681** for all operations on the connectors of the engine management computer.

CC.1	***NOTES***	None.

Check the fuel pump relay mounting connections.
Check the engine management computer connections.
Repair if necessary.

Remove the fuel pump relay and check it is correct:
– **Insulation** between **tracks 3 and 5** of the relay (rest position).
– Measure the resistance of the coil between **tracks 1 and 2**.
Replace the relay if the resistance is not: **90 Ω ± 5 at + 20˚C**.

Check **the condition** of the fuse: **FM3 (30 A) for F9Q 751, 752 and 754 engines**.
Check the **insulation** from **+ 12 V battery feed** and **12 V after relay** feed on the connections between:

Engine computer, **connector A track G1**	→	**track 50** of the fuel pump relay mounting (F9Q 751, 752 and 754)
12 V battery after fuse feed	→	**track 49** of the fuel pump relay mounting (F9Q 751, 752 and 754)
+ 12 V after relay	→	**track 52** of the fuel pump relay mounting (F9Q 751, 752 and 754)

If the fault is still present, change the **fuel pump relay**.

AFTER REPAIR	Deal with any other faults. Clear the fault memory. Switch off the ignition and carry out a road test followed by a test with the **diagnostic tool**.

GETtheMANUALS.org

DF207 **CONTINUED**	

CO.0	***NOTES***	None.

Check the fuel pump relay mounting connections.
Check the engine management computer connections.
Repair if necessary.

Measure the resistance of the fuel pump relay coil between **tracks 1 and 2**.
Replace the relay if the resistance is not: **90 Ω ± 5 at + 20˚C**.

Check the **continuity** and **insulation from earth** of the connections between:

Engine computer, **connector A track G1** → **track 50** of the fuel pump relay mounting (F9Q 751, 752 and 754)

Check **for + 12 V after relay** feed → **track 52** of the fuel pump relay mounting (F9Q 751, 752 and 754)

If the fault is still present, change the **fuel pump relay**.

AFTER REPAIR	Deal with any other faults. Clear the fault memory. Switch off the ignition and carry out a road test followed by a test with the **diagnostic tool**.

GETtheMANUALS.org

DF208 PRESENT OR STORED	FUEL PRESSURE SOLENOID VALVE CIRCUIT CC.1 : Short circuit to + 12 V CO.0 : Open circuit or short circuit to earth 1.DEF: Consistent after switching the ignition off

NOTES	**Conditions for applying the fault finding procedure to stored faults for CC.1 or CO.0:** The fault reappears after: – clearing the fault from the memory, – running of command **AC035 Fuel pressure solenoid valve**.
	Special notes: Use bornier **Elé. 1681** for all operations on the connectors of the engine management computer.

CC.1	***NOTES***	**IMPORTANT** – Please observe the cleanliness guidelines and safety advice.

Check the fuel pressure solenoid valve connections.
Check the engine management computer connections.
Repair if necessary.

Measure the **resistance** of the fuel pressure solenoid valve across **tracks 1 and 2**.
Replace the solenoid valve if this value is not:
- **3 Ω ± 0.5 at + 20˚C for CP3 high pressure pumps,**
- **2.5 Ω ± 0.5 at + 20˚C for CP1 high pressure pumps.**

With the fuel pressure solenoid valve connector disconnected, check the **insulation** to **+ 12 V** on the connection between:

Engine computer, **connector B track L1** ⟶ **track 2** fuel pressure solenoid valve connector

Check the **insulation** on this connection compared with that of the connection between:

Engine computer, **connector B track M2** ⟶ **track 1** fuel pressure solenoid valve connector

If the fault is still present, **replace the solenoid valve**.

AFTER REPAIR	Deal with any other faults. Clear the fault memory. Switch off the ignition and carry out a road test followed by a test with the **diagnostic tool**.

GETtheMANUALS.org

DF208 **CONTINUED 1**	

CO.0	***NOTES***	**IMPORTANT** – Please observe the cleanliness guidelines and safety advice.

Check the fuel pressure solenoid valve connections.
Check the engine management computer connections.
Repair if necessary.

Measure the resistance of the fuel pressure solenoid valve across **tracks 1 and 2**.
Replace the solenoid valve if this value is not:
- **3 Ω ± 0.5 at + 20˚C for CP3 high pressure pumps,**
- **2.5 Ω ± 0.5 at + 20˚C for CP1 high pressure pumps.**

Check **the continuity and insulation** to **earth** of the connection between:

Engine computer, **connector B track L1** ⟶ **track 2** fuel pressure solenoid valve connector

Check **for + 12 V after relay** feed on **track 1** of the fuel pressure solenoid valve.
If the fault is still present, **replace the solenoid valve**.

AFTER REPAIR	Deal with any other faults. Clear the fault memory. Switch off the ignition and carry out a road test followed by a test with the **diagnostic tool**.

GETtheMANUALS.org

DF208 **CONTINUED 2**	

1.DEF	***NOTES***	**Fault finding procedure application conditions:** If the fault reappears stored after: – the fault is cleared, – the power latch phase* has been completed several times, each preceded by an engine cycle: starting and accelerating > 2000 rpm. **Information on the setpoint:** Detection of this fault is performed during the power-latch* phase. Also, this detection follows a "counting strategy" and is therefore not performed each time the ignition is switched off. If it is detected during one power latch* phase, it will not necessarily be detected during the next power latch* phase. It is therefore necessary, after the fault is cleared, to perform several power latch* phases, each preceded by an engine running cycle (see the conditions above) to make it reappear. **Priorities when dealing with a number of faults:** Firstly, apply the interpretation of the **DF195 Engine speed/camshaft sensor consistency 2.DEF or 3.DEF** fault, if it is present. **IMPORTANT** – Please observe the cleanliness guidelines and safety advice.

* The immobiliser warning light will flash a few seconds after the ignition is switched off.

AFTER REPAIR	Deal with any other faults. Clear the fault memory. Switch off the ignition and carry out a road test followed by a test with the **diagnostic tool**.

GETtheMANUALS.org

DF208 **CONTINUED 3**	

On a vehicle fitted with a damper valve, check that this is working correctly using the interpretation of command **AC067 Damper valve**.

Check the fuel pressure solenoid valve connections.
Check the engine management computer connections.
Repair if necessary.

Measure **the resistance** of the fuel pressure solenoid valve across **tracks 1** and **2**.
Replace the solenoid valve if this value is not:
- **3 Ω ± 0.5 at + 20˚C for CP3 high pressure pumps,**
- **2.5 Ω ± 0.5 at + 20˚C for CP1 high pressure pumps.**

Check **the continuity and absence of interference resistance** on the connection between:

Engine computer, **connector B track L1** → **track 2** of the fuel pressure solenoid valve

Carry out the required operations if the resistance is abnormally high.

- Check **the continuity and absence of interference resistance** on **G9T - G9U engines**, on the connections between:

  Engine computer, **connector B track H3** → **track 2** engine speed sensor

  Engine computer, **connector B track G3** → **track 1** of the engine speed sensor

- Check **the continuity and absence of interference resistance** on **F9Q engines**, on the connections between:

  Engine computer, **connector B track H3** → **track B** of the engine speed sensor

  Engine computer, **connector B track G3** → **track A** of the engine speed sensor

Carry out the required operations if the resistance is abnormally high.
- Check earthing of the engine block.

If the fault is still present, refer to the interpretation of command **AC035 Fuel pressure solenoid valve**.

AFTER REPAIR	Deal with any other faults. Clear the fault memory. Switch off the ignition and carry out a road test followed by a test with the **diagnostic tool**.

GETtheMANUALS.org

DF209 PRESENT OR STORED	EGR VALVE POSITION SENSOR CIRCUIT CO.0 : Open circuit or short circuit to earth CC.1 : Short circuit to + 12 V 1.DEF: Sensor supply fault 2.DEF: Offset too high: valve clogged, stuck open or abnormal 3.DEF: Valve jammed open 4.DEF: Valve damaged

NOTES	**Conditions for applying the fault finding procedure to stored faults:** The fault reappears after: – the fault memory has been cleared, – the valve has been actuated by the **AC036 EGR valve** command.
	Special notes: Use bornier **Elé. 1681** for all operations on the connectors of the engine management computer.

CO.0	***NOTES***	**Priorities when dealing with a number of faults:** In the event of the simultaneous presence of the **DF325 Exhaust gas recirculation function, CO.0** fault, check that the exhaust gas recirculation valve connector is connected correctly.

Check the exhaust gas recirculation valve connections:
Check the engine management computer connections.
Repair if necessary.

Check **the continuity and insulation** to earth of the connection between:

Engine computer, **connector B track C2** → **track 6** of the exhaust gas recirculation valve connector

Check **the continuity of the connection** between:

Engine computer, **connector B track F2** → **track 2** of the exhaust gas recirculation valve connector

Also check for **+ 5 V** on **track 2** of the exhaust gas recirculation valve connector.

If the fault is still present, replace the exhaust gas recirculation valve (see **Replacement of components**).

AFTER REPAIR	Deal with any other faults. Clear the fault memory. Switch off the ignition and carry out a road test followed by a test with the **diagnostic tool**.

GETtheMANUALS.org

DF209 **CONTINUED 1**	

CC.1	***NOTES***	None.

Check the exhaust gas recirculation valve connections:
Check the engine management computer connections.
Repair if necessary.

Check **for insulation** to **+ 12 V** feed on the connection between:

Engine computer, **connector B track C2** → **track 6** of the exhaust gas recirculation valve connector

Check **the continuity and absence of interference resistance** on the connection between:

Engine computer, **connector B track B2** → **track 4** of the exhaust gas recirculation valve connector

Also check for the computer earth on **track 4** of the exhaust gas recirculation valve connector.
If the fault is still present, replace the exhaust gas recirculation valve (see **Replacement of components**).

AFTER REPAIR	Deal with any other faults. Clear the fault memory. Switch off the ignition and carry out a road test followed by a test with the **diagnostic tool**.

GETtheMANUALS.org

DF209 **CONTINUED 2**	

1.DEF	***NOTES***	**Priorities when dealing with a number of faults:** Firstly, apply the interpretation of the **DF216 Sensor supply voltage no. 1** fault, if it is present or stored.

Check the exhaust gas recirculation valve connections:
Check the engine management computer connections.
Repair if necessary.

With the connectors disconnected:
Check the **continuity and for the absence of interference resistance** on the following connections:

Engine computer, **connector B track F2** → **track 2** of the exhaust gas recirculation valve connector

Engine computer, **connector B track B2** → **track 4** of the exhaust gas recirculation valve connector

Engine computer, **connector B track C2** → **track 6** of the exhaust gas recirculation valve connector

Also check that they are **insulated** against **+ 12 V**.
If the fault is still present, check for:

+ 5 V on **track 2** of the exhaust gas recirculation valve connector.
Computer earth on **track 4** of the exhaust gas recirculation valve connector.

– If the supply is not correct, make the necessary repairs (harness, connectors, etc.).
– If the feed and the connections are correct, replace the exhaust gas recirculation valve (see **Replacement of components**).

AFTER REPAIR	Deal with any other faults. Clear the fault memory. Switch off the ignition and carry out a road test followed by a test with the **diagnostic tool**.

GETtheMANUALS.org

DF209 **CONTINUED 3**	

2.DEF ***3.DEF*** ***4.DEF***	***NOTES***	None.

– Check the exhaust gas recirculation valve connections
(exhaust gas recirculation valve side).
– Check the engine management computer connections (computer side).
(no conducting particles or bent pins).
– Check for insulation **to + 5 V and + 12 V** on the following connection:

Engine management computer, **connector B track C2** → **track 6** of the exhaust gas recirculation valve connector

– Check the conformity of the power supply of the exhaust gas recirculation valve position sensor:
+ 5 V on **track 2** of the exhaust gas recirculation valve connector.
computer earth on **track 4** of the exhaust gas recirculation valve connector.
Carry out the necessary repairs.

● If this fault **is combined with engine faults** such as poor performance and/or fumes:
Apply **test 9**, part A.

● If this fault **is not combined with engine problems** such as poor performance and/or fumes:
– Run the **RZ002 EGR adaptives** command
– When the command has finished, switch off the ignition and wait until the end of the power latch*,
– Switch on the ignition again and then reinitialise dialogue using the diagnostic tool.
– Clear **DF209**.
– Start the engine.
– After a delay of **50 seconds**, accelerate **gently to 2500 rpm**, for **~ 5 seconds** then return to idle speed.
– Repeat this procedure **5** times.
– If the fault does not recur, end the fault finding procedure.
– If the fault recurs, replace the exhaust gas recirculation valve (see **Replacement of components**).

* Engine immobiliser indicator light flashes a few seconds after the ignition is switched off.

AFTER REPAIR	Deal with any other faults. Clear the fault memory. Switch off the ignition and carry out a road test followed by a test with the **diagnostic tool**.

GETtheMANUALS.org

DF210 PRESENT OR STORED	AFTER IGNITION KEY SIGNAL 1.DEF: Internal fault on channel after ignition

NOTES	**Priorities when dealing with a number of faults:** Firstly, apply the interpretation of the **DF222 Main relay** fault, if it is present or stored.

If the fault is **stored** or **present**, clear the fault from the computer memory.
Switch off the ignition, wait for the end of the power latch*, then switch on the ignition again. Start the engine and re-establish dialogue.
If the fault recurs, contact the Techline.

***** The immobiliser warning light will flash a few seconds after the ignition is switched off.

AFTER REPAIR	Deal with any other faults. Clear the fault memory. Switch off the ignition and carry out a road test followed by a test with the **diagnostic tool**.

GETtheMANUALS.org

DF213 STORED	FLYWHEEL SIGNAL INFORMATION INCONSISTENCY 1.DEF: Overspeed detected

NOTES	**Conditions for applying the fault finding procedure to stored faults:** The fault reappears after: – clearing the fault from the memory, – the engine is started, – engine speed exceeding **~ 3500 rpm**.
	Special notes: This fault appears if the computer detects that the engine speed has exceeded the maximum. This could be linked to an incorrect manoeuvre, for example: abrupt downshifting from 5th to 2nd gear. Use bornier **Elé. 1681** for all operations on the connectors of the engine management computer.

Measure **the resistance** of the engine speed sensor between **tracks A and B on F9Q engines**.
Replace the sensor if its resistance is not: **800 Ω ± 80 at 20˚C.**
Measure the **resistance** of the engine speed sensor between **tracks 1 and 2 on G9T/G9U engines**.
Replace the sensor if its resistance is not: **235 Ω ± 35 at 23˚C.**

Check the conformity of the charging circuit (correct charging voltage and no interference).
Check that the engine and computer earths are correct (tightness, oxidation, etc.).
Check the **insulation** against the **+ 12 V** feed and **the earth** of the following connections **on F9Q engines**:

Engine computer, **connector B track G3** → **track A** of the engine speed sensor

Engine computer, **connector B track H3** → **track B** of the engine speed sensor

Check the **insulation** from **+ 12 V** feed and from **earth** of the following connections **on G9T/G9U engines**:

Engine computer, **connector B track G3** → **track** 1 of the engine speed sensor

Engine computer, **connector B track H3** → **track 2** of the engine speed sensor

If the fault is still present, replace the engine speed sensor.

AFTER REPAIR	Deal with any other faults. Clear the fault memory. Switch off the ignition and carry out a road test followed by a test with the **diagnostic tool**.

GETtheMANUALS.org

DF215 PRESENT OR STORED	ANALOGUE TO DIGITAL CONVERTER 1.DEF: Analogue/digital converter fault

NOTES	None.

If the fault is **stored** or **present**, clear the fault from the computer memory.
Switch off the ignition, wait for the end of the power latch*, then switch the ignition back on. Start the engine and re-establish dialogue.
If the fault recurs, contact the Techline.

AFTER REPAIR	Deal with any other faults. Clear the fault memory. Switch off the ignition and carry out a road test followed by a test with the **diagnostic tool**.

GETtheMANUALS.org

DF216 PRESENT OR STORED	SENSOR FEED VOLTAGE No. 1 1.DEF: Sensor supply voltage 1 too low 2.DEF: Sensor feed voltage 1 too high

NOTES	**Conditions for applying the fault finding procedure to stored faults:** The fault reappears after: – clearing the fault from the memory, – a delay of **1 minute** with the engine running.
	Special notes: – Use bornier **Elé. 1681** for all operations on the connectors of the engine management computer. – Use the **Wiring diagrams** Technical Note for the vehicle.

1.DEF	***NOTES***	None.

Note:
Feed no. 1 is for the following components:
– pedal sensor (gang 1),
– fuel pressure sensor,
– air flowmeter,
– exhaust gas recirculation valve,
– turbocharger pressure sensor (if fitted).

Display parameter **PR215 Sensor supply voltage no. 1**.
– If this voltage is below **4.9 V**, disconnect the connectors on all sensors referred to above one by one.
If, following disconnection, the voltage becomes normal again, replace the sensor concerned or repair the connection (wait a few seconds **between each disconnection** for the computer to make its measurement).
Clear the faults created by the multiple disconnections.
If, with all the sensors disconnected, the voltage is still **less than + 4.9 V**:
– check the insulation against earth of the **+5 V line** of each of these sensors.
– Also check the insulation between:
  – tracks **2 and 4** of the pedal sensor connector,
  – tracks **1 and 3** of the fuel pressure sensor connector,
  – tracks **2 and 3** of the air flow sensor connector.
  – tracks **2 and 4** of the exhaust gas recirculation valve connector,
  – tracks **1** and **2** or **A** and **C** of the turbocharger pressure sensor connector (depending on the engine).
Carry out the necessary repairs.
If the fault is still present, carefully examine the engine management computer connections (for conductive particles, bent pins).
If the problem is still present, contact the Techline.

AFTER REPAIR	Deal with any other faults. Clear the fault memory. Switch off the ignition and carry out a road test followed by a test with the **diagnostic tool**.

GETtheMANUALS.org

DF216 **CONTINUED**	

2.DEF	***NOTES***	None.

Note:
Feed no. 1 is for the following components:
– pedal sensor (gang 1),
– fuel pressure sensor,
– air flowmeter,
– exhaust gas recirculation valve,
– turbocharger pressure sensor (if fitted).

Display parameter **PR215 Sensor supply voltage no. 1**.
– If the voltage is above **5.1 V**, disconnect all the sensor connectors referred to above one by one.
If, following disconnection, the voltage becomes normal again, replace the sensor concerned or repair the connection (wait a few seconds **between each disconnection** for the computer to make its measurement).
Clear the faults created by the multiple disconnections.
If, with these sensors disconnected, the voltage is still greater than **+ 5.1 V**:
– Check the insulation to **+ 12 V** of the following connections:

Engine computer, **connector A track E1**	→	**track 4** of the pedal sensor connector
Engine computer, **connector B track H2**	→	**track 3** of the fuel pressure sensor connector
Engine computer, **connector B track G2**	→	**track 3** of the air flow sensor connector
Engine computer, **connector B track F2**	→	**track 2** of the exhaust gas recirculation valve connector
Engine computer, **connector B track J2**	→	**track 1 or C** of the turbocharger pressure sensor connector

Carry out the necessary repairs.
If the fault is still present, carefully examine the engine management computer connections (for conductive particles, bent pins).
If the problem is still present, contact the Techline.

AFTER REPAIR	Deal with any other faults. Clear the fault memory. Switch off the ignition and carry out a road test followed by a test with the **diagnostic tool**.

GETtheMANUALS.org

DF217 PRESENT OR STORED	SENSOR FEED VOLTAGE No. 2 1.DEF: Sensor feed voltage no. 2 too low 2.DEF: Sensor feed voltage 2 too high

NOTES	**Conditions for applying the fault finding procedure to stored faults:** The fault reappears after: – clearing the fault from the memory, – a delay of **1 minute** with the engine running.
	Special notes: Use bornier **Elé. 1681** for all operations on the connectors of the engine management computer. Refer to the **Wiring diagrams** Technical Note for the vehicle.

1.DEF	***NOTES***	None.

Note:
Supply no. 2 is for the following component:
– pedal sensor.

Display parameter **PR216 Sensor supply voltage no. 2**:
– If the voltage is below **+ 4.9 V**, disconnect the connectors on all the sensors referred to above one by one.
If, following disconnection, the voltage becomes normal again, replace the sensor concerned or repair the connection (wait a few seconds **between each disconnection** for the computer to make its measurement).
Clear the faults created by the multiple disconnections.
If, with these sensors disconnected, the voltage is still **below + 4.9 V**:
– check the insulation against earth of the **+5 V line** of each of these sensors.
– Also check the insulation between:
tracks **1** and **5** of the pedal sensor connector.
Carry out the necessary repairs.
If the fault is still present, carefully examine the engine management computer connections (for conductive particles, bent pins).
If the problem is still present, contact the Techline.

AFTER REPAIR	Deal with any other faults. Clear the fault memory. Switch off the ignition and carry out a road test followed by a test with the **diagnostic tool**.

GETtheMANUALS.org

DF217 **CONTINUED**	

2.DEF	***NOTES***	None.

Note:
Supply no. 2 is for the following component:
– pedal sensor.

Display parameter **PR216 Sensor supply voltage no. 2**:
– If the voltage is above **5.1 V**, disconnect all the sensor connectors referred to above one by one.
If, following disconnection, the voltage becomes normal again, replace the sensor concerned or repair the connection (wait a few seconds **between each disconnection** for the computer to make its measurement).
Clear the faults created by the multiple disconnections.
If, with these sensors disconnected, the voltage is still **greater** than **+ 5.1 V**:
– Check the insulation to **+ 12 V** of the following connections:

Engine computer, **connector A track H2** ⟶ **track 5** of the pedal sensor connector

Carry out the necessary repairs.
If the fault is still present, carefully examine the engine management computer connections (for conductive particles, bent pins).
If the problem is still present, contact the Techline.

AFTER REPAIR	Deal with any other faults. Clear the fault memory. Switch off the ignition and carry out a road test followed by a test with the **diagnostic tool**.

GETtheMANUALS.org

DF218 PRESENT OR STORED	MICROCONTROLLER 1.DEF: Fault in the microcontroller 2.DEF: Inconsistent data

NOTES	**Priorities when dealing with a number of faults:** Apply the interpretation of fault **DF222 Main relay** first if it is present or stored.

If the fault is **stored** or **present**, clear the fault from the computer memory.
Switch off the ignition, wait for the end of the power latch*, then switch the ignition back on. Start the engine and re-establish dialogue.
If the fault recurs, contact the Techline.

***** The immobiliser warning light will flash a few seconds after the ignition is switched off.

AFTER REPAIR	Deal with any other faults. Clear the fault memory. Switch off the ignition and carry out a road test followed by a test with the **diagnostic tool**.

GETtheMANUALS.org

DF222 STORED	MAIN RELAY 1.DEF: Relay cut off too soon 2.DEF: Relay cut off too late

NOTES	**Fault finding procedure application conditions:** The fault reappears after: – the fault memory has been cleared, – the engine is started, – the ignition is switched off with loss of dialogue, – switching on the ignition, – establishing dialogue.
	Special notes: Use bornier **Elé. 1681** for all operations on the connectors of the engine management computer. Refer to the **Wiring diagrams** Technical Note for the vehicle to locate the connections and relays concerned.

1.DEF	***NOTES***	None.

Check the connections of the injection supply relay mounting.
Check the engine management computer connections.
Repair if necessary.

Check the tightness and the condition of the **+** and **-** battery terminals.

For F9Q 650, 680, 750, 751, 752, 754, 820, G9T 702, 703, 742 and 743 engines:
Check the **continuity** of the following connections:

Injection supply relay **track 13** → **tracks M2** and **M3, connector B** of the engine management computer

Injection supply relay **track 15** → **track D4, connector B** of the engine management computer

Check the conformity of the fuses concerned (crimping and condition of the wires on the terminals):
– For F9Q 650, 680, 750, 751, 752, 754, 820, G9T 702, 703, 742 and 743 engines: **FM3 (30 A)**.
Check the conformity of the impact sensor: incorrect contact (depending on equipment).
Check the conformity of the engine management computer earths:

Earth → **track L3, L4, M4, connector B** of the engine management computer

If the fault is still present, replace the injection feed relay.

AFTER REPAIR	Deal with any other faults. Clear the fault memory. Switch off the ignition and carry out a road test followed by a test with the **diagnostic tool**.

GETtheMANUALS.org

DF222 **CONTINUED 1**	

2.DEF	***NOTES***	None.

Check the main relay connections. Check the engine management computer connections. Repair if necessary.
Check the conformity of the main relay (relay removed): – Contact insulation between **tracks 13** and **16**. – Resistance of the coil between **tracks 14** and **15**. Replace the relay if its resistance is not: **60 Ω ± 5 at + 20˚C**.
For F9Q 650, 680, 750, 751, 752, 754, 820, G9T 702, 703, 742 and 743 engines: Check the **insulation** to **earth** of the following connection: Injection supply relay **track 15** ⟶ **track D4, connector B** of the engine management computer
If the fault is still present, replace the injection feed relay.

AFTER REPAIR	Deal with any other faults. Clear the fault memory. Switch off the ignition and carry out a road test followed by a test with the **diagnostic tool**.

GETtheMANUALS.org

DF225 PRESENT OR STORED	STABILISED VOLTAGE REGULATOR 1.DEF: Fault in the stabilised voltage regulator 2.DEF: Fault in the stabilised voltage regulator

NOTES	None.

If the fault is **stored** or **present**, clear the fault from the computer memory.
Switch off the ignition, wait for the end of the power latch*, then switch on the ignition again. Start the engine and re-establish dialogue.
If the fault recurs, contact the Techline.

AFTER REPAIR	Deal with any other faults. Clear the fault memory. Switch off the ignition and carry out a road test followed by a test with the **diagnostic tool**.

GETtheMANUALS.org

DF226 PRESENT OR STORED	DAMPER VALVE CIRCUIT CC.1 : Short circuit to + 12 V CO.0 : Open circuit or short circuit to earth

NOTES	**Conditions for applying the fault finding procedure to stored faults:** If the fault becomes present after an **AC067 Damper valve** actuator command.
	Special notes: Use bornier **Elé. 1681** for all operations on the connectors of the engine management computer.

CC.1	***NOTES***	None.

Check the connections of the damper valve solenoid valve. Check the engine management computer connections. Repair if necessary.
Measure **the resistance** of the coil in the damper valve solenoid valve across **tracks 1** and **2**. Replace the solenoid valve if the resistance is not: **46 Ω ± 3 at + 25˚C**.
Check **for insulation** from **+ 12 V** feed on the connection between: Engine management computer, **connector C track F4** ⟶ **track 1** of the solenoid valve connector If the fault is still present, replace the damper valve solenoid valve.

CO.0	***NOTES***	None.

Check the connections of the damper valve solenoid valve. Check the engine management computer connections. Repair if necessary.
Measure **the resistance** of the coil in the damper valve solenoid valve across **tracks 1** and **2**. Replace the solenoid valve if the resistance is not: **46 Ω ± 3 at + 25˚C**.
Check **the continuity and insulation** to earth of the connection between: Engine management computer, **connector C track F4** ⟶ **track 1** of the solenoid valve connector Check **for + 12 Volts** on **track 2** of the connector on the damper valve solenoid valve. If the fault is still present, replace the damper valve solenoid valve.

AFTER REPAIR	Deal with any other faults. Clear the fault memory. Switch off the ignition and carry out a road test followed by a test with the **diagnostic tool**.

GETtheMANUALS.org

DF227 PRESENT OR STORED	SWIRL FLAP CC.1 : Short circuit to + 12 V CO.0 : Open circuit or short circuit to earth 1.DEF: Jammed valve or jammed control solenoid valve

NOTES	**Conditions for applying the fault finding procedure to stored CC.1 or CO.O:** If the fault becomes present after running actuator command **AC013 Swirl flap**.
	Special notes: Use bornier **Elé. 1681** for all operations on the connectors of the engine management computer.

CC.1	***NOTES***	None.

Check the swirl solenoid valve connections.
Check the engine management computer connections.
Repair if necessary.

Measure the **resistance** of the swirl flap solenoid valve across **tracks 1** and **2**.
Replace the solenoid valve if its resistance is not approximately: **46 Ω ± 3 at + 25˚C**.

Check **for insulation** from **+ 12 V** feed on the connection between:

Engine management computer **connector C track H4** ⟶ **track 1** of the solenoid valve connector

If the fault is still present, replace the swirl flap solenoid valve.

CO.0	***NOTES***	None.

Check the swirl solenoid valve connections.
Check the engine management computer connections.
Repair if necessary.

Measure the **resistance** of the swirl flap solenoid valve across **tracks 1** and **2**.
Replace the solenoid valve if the resistance is not: **46 Ω ± 3 at + 25˚C**.

Check **the continuity and insulation** to **earth** of the connection between:

Engine management computer, **connector C track H4** ⟶ **track 1** of the solenoid valve connector

Check **for** the **+ 12 V feed** on **track 2** of the swirl flap solenoid valve connector.
If the fault is still present, replace the swirl flap solenoid valve.

AFTER REPAIR	Deal with any other faults. Clear the fault memory. Switch off the ignition and carry out a road test followed by a test with the **diagnostic tool**.

GETtheMANUALS.org

DF227 **CONTINUED**	

1.DEF	***NOTES***	**Priorities when dealing with a number of faults:** Use the interpretation of fault **DF056 Air flow sensor circuit** or **DF325 Exhaust gas recirculation function** or **DF301 Air inlet circuit** first if any one of the three is present or stored.
		Conditions for applying the fault finding procedure to 1.DEF stored: The fault reappears after: – the fault memory has been cleared, – a road test with engine speed **>3500 rpm**, fuel flow > **59 mm^3/stroke** and atmospheric pressure **> 996 hPa (996 mbar)** (minimum of **4 seconds** under these conditions to clear the fault).
		Special notes: Use bornier **Elé. 1681** for all operations on the connectors of the engine management computer.

Check the swirl solenoid valve connections.
Check the engine management computer connections.
Repair if necessary.

Measure the **resistance** of the swirl flap solenoid valve across **tracks 1** and **2**.
Replace the solenoid valve if the resistance is not: **46 Ω ± 3 at + 25˚C**.

Check **the continuity and absence of interference resistance** on the connection between:

Engine management computer **connector C track H4** → **track 1** turbulence flap solenoid valve connector

If these checks do not reveal any faults, refer to the interpretation of command **AC013 Swirl flap**.

AFTER REPAIR	Deal with any other faults. Clear the fault memory. Switch off the ignition and carry out a road test followed by a test with the **diagnostic tool**.

GETtheMANUALS.org

DF228 PRESENT OR STORED	BRAKE SIGNALS 1.DEF: Consistency with redundant brakes

1.DEF	***NOTES***	**Conditions for applying the fault finding procedure to stored faults:** If the fault is declared present after the brake pedal has been depressed.
		Special notes: Use bornier **Elé. 1681** for all operations on the connectors of the engine management computer.

AFTER REPAIR	Deal with any other faults. Clear the fault memory. Switch off the ignition and carry out a road test followed by a test with the **diagnostic tool**.

GETtheMANUALS.org

DF228

CONTINUED 1

From the List of statuses menu, check **ET122** and **ET120** and check:

– brake pedal in rest position	**ET122**= **ABSENT**	and	**ET123**= **ABSENT**
– brake pedal depressed	**ET122** = **PRESENT**	and	**ET123** = **PRESENT**

*Has **ET122** been correctly recognised?*

NO

YES

*Has **ET123** been correctly recognised?* — **YES** → **Clear the fault End of fault finding procedure**

NO

Check the connections of the brake pedal switch, the ABS computer, the electronic stability program computer and the engine management computer.
Repair if necessary.
Check **for + 12 V** after ignition feed on **track 2 and 4** of the brake pedal switch connector and the condition of the fuses (F28 (20 A) and F21 (10 A)).
Disconnect the ABS/ESP (electronic stability program) computer and check the **continuity and insulation** from **+ 12 V** and from earth of the following connections:

Brake pedal switch connector **track 1** → **track 41** ABS/ESP computer connector

electronic stability program and ABS computer connector

Check that the brake pedal switch is working correctly:
– in rest position: infinite resistance between tracks **1 and 2**; depressed: continuity between tracks **1 and 2**.
Replace the switch if necessary.
If the fault is still present, run fault finding on the **Anti-lock Braking System - electronic stability program;** if no irregularity is detected, then run **multiplexed network fault finding**.

A

AFTER REPAIR	Deal with any other faults. Clear the fault memory. Switch off the ignition and carry out a road test followed by a test with the **diagnostic tool**.

GETtheMANUALS.org

DF228 **CONTINUED 2**	

Check the brake pedal switch connections and the engine management computer connections. Repair if necessary.
Check the condition and adjustment of the brake pedal switch. Repair if necessary.
Check **for + 12 V** after ignition feed on **track 2 and 4** of the brake pedal switch connector and the condition of the fuses (F28 (20 A) and F21 (10 A)).
Disconnect the ABS/ESP (electronic stability program) computer and check the **continuity and insulation** from **+ 12 V** and from earth of the following connection:

Engine management computer, **connector A track F3** → **track 3** brake pedal switch connector

Check that the brake pedal switch is working correctly:
– in rest position: infinite resistance between tracks **1 and 2** ; depressed: continuity between tracks **1 and 2**.
Replace the switch if necessary.

AFTER REPAIR	Deal with any other faults. Clear the fault memory. Switch off the ignition and carry out a road test followed by a test with the **diagnostic tool**.

GETtheMANUALS.org

DF234 PRESENT OR STORED	CRUISE CONTROL/SPEED LIMITER 1.DEF: Cruise control switch voltage 2.DEF: Plausibility of deceleration 3.DEF: Plausibility of cruise control/speed limiter switch

1.DEF	***NOTES***	All operations on the connections beneath the steering wheel centre cover require the **air bag computer to be locked**.
		Special notes: see the **Wiring diagrams** Technical Note for your vehicle to locate the connections and connectors concerned.
		Conditions for applying the fault finding procedure to stored faults: If the fault recurs as present after: – the steering wheel controls being pressed.

Display **PR178 Cruise control switch voltage**. With no pressure on the steering wheel switches, the voltage shown should be: **4.9 V ± 0.2**.

If the voltage is not in this region, disconnect the steering wheel switch (black union **2 tracks** beneath the steering wheel centre cover) and display **PR178** again.
If the voltage changes to **4.9 V ± 0.2**, go to stage 1.
If the voltage does not change, check the engine management computer connections.
Repair if necessary. If the fault is still present, go to step **a**.

1 - Check the conformity of the steering wheel switches as follows: disconnect the black connector **2 tracks** under the central cover of the steering wheel (ohmmeter connected on the steering wheel switch side). The measure should indicate:

- **900 Ω (± 10 Ω)** when the **Resume** button is pressed.

(or the one-touch switch **R** on the right-hand side of the steering wheel)

- **0 Ω (0.8 Ω max)** when the **Suspend** button is pressed.

(or the one-touch switch **O** on the right-hand side of the steering wheel)

- **300 Ω (± 10 Ω)** when the **Set +** button is pressed.

(or the one-touch switch on the left of the steering wheel)

- **100 Ω (± 10 Ω)** when the **Set -** button is pressed.

(or the one-touch switch on the left of the steering wheel)

- **Infinite resistance** in rest position.

– **If the values are not correct**, replace the steering wheel switches.
– **If the values are correct**, make the same measurements from **connector A** of the engine management computer by connecting the ohmmeter between **tracks A2** and **B2 (steering wheel switch connected)**.

a - If the fault is still present, check the connection between the engine management computer and the connector under the steering wheel, using the relevant wiring diagram (line resistance, open circuit, short circuit, etc.). Carry out the necessary repairs.

b - If the values are correct, clear the fault, switch off the ignition, wait until the end of the power latch* phase and switch on the ignition again.

If the fault reappears (after pressing the steering wheel controls), contact the Techline.

* The immobiliser warning light will flash a few seconds after switching the ignition off.

AFTER REPAIR	Deal with any other faults. Clear the fault memory. Switch off the ignition and carry out a road test followed by a test with the **diagnostic tool**.

GETtheMANUALS.org

DF234 **CONTINUED 1**	

2.DEF	***NOTES***	**Priorities when dealing with a number of faults:** Deal with faults **DF196 Pedal sensor circuit gang 1 or DF198 Pedal sensor circuit gang 2** first if one of the two is present.

Check the conformity of the accelerator pedal sensor:
- **PR030 Accelerator pedal position,**
- **PR147 Pedal potentiometer voltage gang 1**
- **PR148 Pedal potentiometer voltage gang 2**
- **PR217 Pedal load (gang 1)**
- **PR218 Pedal load (gang 2)**

Check the engine management computer connections.
Repair if necessary.
Perform fault finding on the ABS system/electronic stability program.

AFTER REPAIR	Deal with any other faults. Clear the fault memory. Switch off the ignition and carry out a road test followed by a test with the **diagnostic tool**.

GETtheMANUALS.org

DF234 **CONTINUED 2**	

3.DEF	***NOTES***	None.

Check the connections of the on/off switch of the speed limiter/cruise control.
Check the engine management computer connections.
Repair if necessary.

Check the operation of the on/off switch of the speed limiter/cruise control using an ohmmeter:

Switch in rest position:
Insulation between tracks **A2 and A3**
Insulation between tracks **A2 and B1**

Switch on cruise-control position:
Insulation between tracks **A2 and B1**
Continuity across tracks **A2 and A3**

Switch on Speed limiter position:
Insulation between tracks **A2 and A3**
Continuity across tracks **A2 and B1**

If the on/off switch is incorrect, replace the switch.
If the on/off switch is correct, check **the continuity and the absence of interference resistance** on the following connections:

Engine computer **connector A track F2** → **track B1** of the cruise control/speed limiter on/off switch connector.

Engine computer **connector A track D2** → **track A3** of the cruise control/speed limiter on/off switch connector.

Also check the **insulation** between these two connections, as well as their insulation against the **+ 12 V** feed.
Carry out the necessary repairs.

AFTER REPAIR	Deal with any other faults. Clear the fault memory. Switch off the ignition and carry out a road test followed by a test with the **diagnostic tool**.

GETtheMANUALS.org

DF238 PRESENT OR STORED	THERMOPLUNGER No. 3 RELAY CIRCUIT CC.1 : Short circuit to + 12 V CO.0 : Open circuit or short circuit to earth

NOTES	**Conditions for applying the fault finding procedure to stored faults:** If the fault becomes present following activation of the relay using command **AC031 Thermoplunger no. 3 relay.**
	Special notes: Use bornier **Elé. 1681** for all operations on the connectors of the engine management computer.

CC.1	***NOTES***	None.

Check the connections of the thermoplunger no. **3** relay mounting on the engine fuse box.
Check the engine management computer connections.
Repair if necessary.

Check the conformity of the thermoplunger no. **3** relay (relay removed):
– **Insulation** between **tracks 34 and 33**.
– Measure the resistance of the relay coil between **tracks 37 and 35**.
Replace the relay if its resistance is not: **90 Ω ± 5 at + 20˚C**.

Check **for insulation** from **+ 12 V** feed on the connection between:

Engine computer, connector **C track E4** ⟶ **track 35** of the thermoplunger no.**3** relay mounting

Also check that this connection is **insulated** against the following connections:

thermoplunger no. **3** relay mounting **track 37** ⟶ **+ 12 V after relay**

thermoplunger no. **3** relay mounting **track 34** ⟶ **+ 12 V batteryafter fuse feed**

AFTER REPAIR	Deal with any other faults. Clear the fault memory. Switch off the ignition and carry out a road test followed by a test with the **diagnostic tool**.

GETtheMANUALS.org

DF238 **CONTINUED 1**	

CO.0	***NOTES***	None.

Check the connections of the thermoplunger no. **3** relay mounting on the engine fuse box.
Check the engine management computer connections.
Repair if necessary.

Measure the **resistance** of the thermoplunger no. **3** relay coil between **tracks 37 and 35**.
Replace the relay if its resistance is not: **90 Ω ± 5 at + 20˚C**.

Check **the continuity and insulation** to **earth** of the connection between:

Engine computer, connector **C track E4** ⟶ **track 35** of the thermoplunger no.**3** relay mounting

Check **for** the **+ 12 V after relay** feed on **track 37** of the thermoplunger no. **3** relay mounting.

AFTER REPAIR	Deal with any other faults. Clear the fault memory. Switch off the ignition and carry out a road test followed by a test with the **diagnostic tool**.

GETtheMANUALS.org

DF239 PRESENT OR STORED	THERMOPLUNGER NO. 2 RELAY CIRCUIT CC.1 : Short circuit to + 12 V CO.0 : Open circuit or short circuit to earth

NOTES	**Conditions for applying the fault finding procedure to stored faults:** If the fault becomes present following an actuator command **AC064 Thermoplunger no. 2 relay**.
	Special notes: Use bornier **Elé. 1681** for all operations on the connectors of the engine management computer. The thermoplunger no. 2 relay supplies two thermoplungers in parallel. Refer to the **Wiring diagrams** Technical Note for the vehicle to locate the fuses and relays concerned.

CC.1	***NOTES***	None.

Check the thermoplunger no. **2** relay connections.
Check the engine management computer connections.
Repair if necessary.

Check the conformity of the thermoplunger no. **2** relay (relay removed):
– Insulation between **tracks 3 and 5**.
– Measure the resistance of the relay coil between **tracks 1 and 2**.
Replace the relay if its resistance is not: **90 Ω ± 5 at + 20˚C**.

For G9T 702 and 703 engines (Vel Satis):
Check **the insulation** against **+ 12 V** of the connection between:

Engine computer, connector **B track F3** → **track 3** thermoplunger no. **2** relay mounting

Also check that this connection is **insulated** against the following connections:

Thermoplunger no. **2** relay mounting, **track 2** → **+ 12 V after relay**

Thermoplunger no. **2** relay mounting, **track 1** → **+ 12 V battery after fuse feed**

For F9Q 650, 750, 751, 752, 754, G9T 702 and 703 engines (Laguna II):
Check **the insulation** against **+ 12 V** of the connection between:

Engine management computer, connector **B track G3** → **track 3** thermoplunger no. **2** relay mounting

Also check that this connection is **insulated** against the following connections:

Thermoplunger no. **2** relay mounting, **track 2** → **+ 12 V after relay**

Thermoplunger no. 2 relay mounting, track 1 → + 12 V battery after fuse feed

AFTER REPAIR	Deal with any other faults. Clear the fault memory. Switch off the ignition and carry out a road test followed by a test with the **diagnostic tool**.

GETtheMANUALS.org

DF239 **CONTINUED**	

CO.0	***NOTES***	None.

Check the thermoplunger no. **2** relay connections. Check the engine management computer connections. Repair if necessary.
Measure **the resistance** of the thermoplunger no. **2** relay coil between **tracks 1 and 2**. Replace the relay if its resistance is not: **90 Ω ± 5 at + 20˚C**.
For G9T 702 and 703 engines (Vel Satis): Check **the continuity and insulation** to **earth** of the connection between: Engine computer, connector **B track F3** ⟶ **track 3** thermoplunger no. **2** relay mounting
For F9Q 650, 750, 751, 752, 754, G9T 702 and 703 engines (Laguna II): Check **the continuity and insulation** to **earth** of the connection between: Engine management computer, connector **B track G3** ⟶ **track 3** thermoplunger no. **2** relay mounting
Check for **+ 12 V after relay** feed on **track 1** (or other track depending on the engine; check CC.1 on the other tracks) of the thermoplunger no. **2** relay mounting.

AFTER REPAIR	Deal with any other faults. Clear the fault memory. Switch off the ignition and carry out a road test followed by a test with the **diagnostic tool**.

GETtheMANUALS.org

DF240 PRESENT OR STORED	THERMOPLUNGER NO. 1 RELAY CIRCUIT CC.1 : Short circuit to + 12 V CO.0 : Open circuit or short circuit to earth

NOTES	**Conditions for applying the fault finding procedure to stored faults:** If the fault recurs as present after: – actuator command **AC063 Thermoplunger no. 1 relay**.
	Special notes: Use bornier **Elé. 1681** for all operations on the connectors of the engine management computer. Refer to the **Wiring diagrams** Technical Note for the vehicle to locate the fuses and relays concerned.

CC.1	***NOTES***	None.

Check the thermoplunger no. **1** relay connections.
Check the engine management computer connections.
Repair if necessary.

Check the conformity of the thermoplunger no. **1** relay (relay removed):
– Insulation between **tracks 67 and 66** (in resting position).
– Resistance of the coil between **tracks 63 and 65**.
Replace the relay if its resistance is not: **90 Ω ± 5 at + 20˚C**.

Check **for insulation** from **+ 12 V** feed on the connection between:

Engine management computer, **connector C track J4** ⟶ **track 65** thermoplunger no. **1** relay mounting

Also check that this connection is **insulated** against the following connections:

Thermoplunger no. **1** relay mounting, **track 63** ⟶ **+ 12 V after relay**

Thermoplunger no. **1** relay mounting, **track 67** ⟶ **+ 12 V battery after fuse feed**

AFTER REPAIR	Deal with any other faults. Clear the fault memory. Switch off the ignition and carry out a road test followed by a test with the **diagnostic tool**.

GETtheMANUALS.org

DF240 **CONTINUED**	

CO.0	***NOTES***	None.

Check the thermoplunger no. **1** relay connections.
Check the engine management computer connections.
Repair if necessary.

Check **for + 12 V after relay feed** on **track 63** (or another track depending on the engine; check CC.1 on the other tracks) of the thermoplunger no. **1** relay mounting.
Measure the **resistance** of the relay coil between **tracks 63 and 65**:
Replace the relay if its resistance is not: **90 Ω ± 5 at + 20˚C**.

Check **the continuity and insulation** to **earth** of the connection between:

Engine management computer, **connector C track J4** ⟶ **track 65** thermoplunger no. **1** relay mounting

AFTER REPAIR	Deal with any other faults. Clear the fault memory. Switch off the ignition and carry out a road test followed by a test with the **diagnostic tool**.

GETtheMANUALS.org

DF253 STORED	FLOW DURING SELF TEST AFTER IGNITION IS SWITCHED OFF 1.DEF: Inconsistency with engine speed

1.DEF	***NOTES***	**Priorities when dealing with a number of faults:** Apply the interpretation of all other faults that are present or stored first.

The computer uses different strategies to switch off the engine. Either by setting the fuel flow to 0 (with the regulator) or by injector cut-out.
If during the power latch* phase, the speed does not fall below a certain value (**~ 300 rpm**) in a very short time (**< 2 seconds**) the fault will appear as stored.
Therefore all mechanical, hydraulic or other factors which could cause the engine to keep turning after the ignition has been switched off must be eliminated.
Check:
– that there are no leaks from the injector nozzles. See injector fault finding: apply **test 10**,
– the operation of the fuel pressure (or flow) solenoid valve. See **AC035 Fuel pressure solenoid valve** in the **Interpretation of commands** section,
– correct operation of the damper valve (if fitted to the vehicle). See **AC067 Damper valve** in the **Interpretation of commands** section.
Perform the necessary operations, clear the fault and then carry out the instructions again.
If the problem is still present, contact the Techline.

* The immobiliser warning light will flash a few seconds after switching the ignition off.

AFTER REPAIR	Deal with any other faults. Clear the fault memory. Switch off the ignition and carry out a road test followed by a test with the **diagnostic tool**.

GETtheMANUALS.org

DF276 PRESENT OR STORED	INJECTOR CODE PROGRAMMING 1.DEF: No code in memory 2.DEF: Internal electronic fault when writing

NOTES	**Conditions for applying the fault finding procedure to stored faults:** The fault reappears after: – The fault has been cleared from memory. – The ignition has been switched off. – The end of the power latch* phase and switching the ignition on again.
	Special notes: If the fault is present, the injection flow rate will be limited, and the vehicle's power will be limited.
	IMPORTANT Please observe the cleanliness guidelines and safety advice.

1.DEF	***NOTES***	None.

This fault is **present** on all blank computers (new or after reprogramming).
– Program the injector codes using:
either command **SC002 Enter injector codes**
or the **SC001 Write saved data** command
(Consult the procedures defined in the **Interpretation of commands** section).
– After the codes have been written:
– Switch off the ignition.
– Wait for the end of the power latch* phase and switch on the ignition again.
– Establish dialogue and clear the fault memory.
– End of operation.

WARNING
If fault **DF276** is still present after the injector codes have been entered, check that power latch* occurs each time the ignition is switched off.
To check this, switch off the ignition and wait **10 seconds** until the immobiliser warning light flashes.
If the immobiliser warning light flashes immediately after the ignition is switched off, the power latch* is no longer effective and the injection computer cannot store the information (programming, configurations, etc.).
Repair if necessary.
If all these checks are ineffective and the fault is still present, contact the Techline.

***** The immobiliser warning light will flash a few seconds after the ignition is switched off.

AFTER REPAIR	Deal with any other faults. Clear the fault memory. Switch off the ignition and carry out a road test followed by a test with the **diagnostic tool**.

GETtheMANUALS.org

DF276 **CONTINUED**	

2.DEF	***NOTES***	None.

– Switch off the ignition.
– Wait for the end of the power latch* phase then switch on the ignition again.
– Establish dialogue.
If the fault was previously **stored**, clear the fault memory and end the procedure.
If the fault is still **present**, contact the Techline.

***** The immobiliser warning light will flash a few seconds after the ignition is switched off.

AFTER REPAIR	Deal with any other faults. Clear the fault memory. Switch off the ignition and carry out a road test followed by a test with the **diagnostic tool**.

GETtheMANUALS.org

DF301 PRESENT OR STORED	AIR INLET CIRCUIT CC.1 : Wastegate valve in short circuit to + 12 V CO.0 : Turbocharging solenoid valve in open circuit or short circuit to earth 1.DEF: Lack of air in the intake circuit 2.DEF: Turbocharging pressure too high

NOTES	**Conditions for applying the fault finding procedure to stored faults:** For **CC.1 or CO.0**, if the fault reappears after: – clearing the fault from the memory, – actuation of the valve by the **AC004 Turbocharging solenoid valve** command. For **1.DEF or 2.DEF**, if the fault is declared present after: – the engine is started, – a road test.
	Special notes: Use bornier **Elé. 1681** for all operations on the connectors of the engine management computer.

CC.1	***NOTES***	None.

Check the connections of the turbocharging pressure relief solenoid valve.
Check the engine management computer connections.
Repair if necessary.

Measure the **resistance** of the turbocharging pressure relief solenoid valve between **tracks 1 and 2**.
Replace the solenoid valve if its resistance is not:
15.4 Ω ± 0.7 at + 20˚C for a *Pierburg* solenoid valve.
16.5 Ω ± 1.6 at + 25˚C for a *Bitron* solenoid valve.

Check **for insulation** from **+ 12 V** feed on the connection between:

Engine computer, **connector B track L2** → **track 1** turbocharging pressure relief solenoid valve connector

AFTER REPAIR	Deal with any other faults. Clear the fault memory. Switch off the ignition and carry out a road test followed by a test with the **diagnostic tool**.

GETtheMANUALS.org

DF301 **CONTINUED 1**	

CO.0	***NOTES***	None.

Check the connections of the turbocharging pressure relief solenoid valve.
Check the engine management computer connections.
Repair if necessary.

Measure the **resistance** of the turbocharging pressure relief solenoid valve between **tracks 1 and 2**.
Replace the solenoid valve if its resistance is not:
15.4 Ω ± 0.7 at + 20˚C for a *Pierburg* solenoid valve.
16.5 Ω ± 1.6 at + 25˚C for a *Bitron* solenoid valve.

Check **the continuity and insulation** to **earth** of the connection between:

Engine computer, **connector B track L2** → **track 1** of the turbocharging pressure relief solenoid valve connector

Check **for** the **+ 12 V after relay** feed on **track 2** of the turbocharging pressure relief solenoid valve connector.

AFTER REPAIR	Deal with any other faults. Clear the fault memory. Switch off the ignition and carry out a road test followed by a test with the **diagnostic tool**.

GETtheMANUALS.org

DF301 **CONTINUED 2**	

1.DEF	***NOTES***	**Priorities when dealing with a number of faults:** Apply the interpretation of the following faults first, if present or stored: – **DF301 Air inlet circuit: CO.0 or CC.1,** – **DF209 EGR valve position sensor circuit: 2.DEF or 3.DEF,** – **DF325 Exhaust gas recirculation function: CO.0 or 2.DEF,** – **DF199 Turbocharging pressure sensor: CO.0 or 2.DEF,** – **DF056 Air flow sensor circuit: 2.DEF.**

Check the connections of the turbocharging pressure relief solenoid valve.
Check the engine management computer connections.
Repair if necessary.
Check **the continuity and absence of interference resistance** on the connection between:

Engine computer, **connector B track L2** → **track 1** of the solenoid valve connector

12 V after injection relay → **track 2** of the solenoid valve connector

Measure the **resistance** of the turbocharging pressure relief solenoid valve between **tracks 1 and 2**.
Replace the solenoid valve if its resistance is not:
15.4 Ω ± 0.7 at + 20˚C for a *Pierburg* solenoid valve.
16.5 Ω ± 1.6 at + 25˚C for a *Bitron* solenoid valve.

Check the sealing of the high pressure air circuit:
Apply **test 4**.

Check the turbocharger: carry out **test 6** for a fixed geometry turbocharger, **test 7** for a variable geometry turbocharger, then **test 8** in both cases.

Check the exhaust gas recirculation circuit:
Apply **test 9**, part A.

AFTER REPAIR	Deal with any other faults. Clear the fault memory. Switch off the ignition and carry out a road test followed by a test with the **diagnostic tool**.

GETtheMANUALS.org

DF301 **CONTINUED 3**	

2.DEF	***NOTES***	**Priorities when dealing with a number of faults:** Firstly, apply the interpretation of the **DF199 Turbocharging pressure sensor, CC.1** fault, if it is present or stored.

Check the connections of the turbocharging pressure relief solenoid valve.
Check the engine management computer connections.
Repair if necessary.

Check **the resistance** of the turbocharging pressure relief solenoid valve between **tracks 1 and 2**:
Replace the solenoid valve if its resistance is not:
15.4 Ω ± 0.7 at + 20˚C for a *Pierburg* solenoid valve.
16.5 Ω ± 1.6 at + 25˚C for a *Bitron* solenoid valve.

Check the **continuity and absence of interference resistance** on the connection between:

Engine computer, **connector B track L2** ⟶ **track 1** of the turbocharging pressure relief solenoid valve connector

Check **for** the **+ 12 V after relay** feed on **track 2** of the turbocharging pressure relief connector.

● **Make sure the turbocharging pressure relief solenoid valve is not jammed open:**
– With the engine switched off, disconnect the input and output hoses of the solenoid valve.
With a *Pierburg* solenoid valve:
– Connect a vacuum pump to the inlet **union** and apply a vacuum.
– If the vacuum pressure **is not maintained**: replace the solenoid valve.
With a *Bitron* solenoid valve:
– Fit a plug to the solenoid valve outlet union.
– Connect a vacuum pump to the inlet **union** and apply a vacuum.
– If the vacuum **is maintained**: replace the solenoid valve.

● **Check that the control rod of the turbocharger is not jammed:**
– **Apply test 6 for a turbocharger with fixed geometry.**
– **Apply test 7 for a turbocharger with variable geometry.**

AFTER REPAIR	Deal with any other faults. Clear the fault memory. Switch off the ignition and carry out a road test followed by a test with the **diagnostic tool**.

GETtheMANUALS.org

DF325 PRESENT OR STORED	EXHAUST GAS RECIRCULATION FUNCTION CC.1 : Short circuit to + 12 V CO.0 : Open circuit or short circuit to earth 1.DEF: Negative loop deviation 2.DEF: Positive loop deviation 3.DEF: Negative loop deviation 4.DEF: Positive loop deviation

NOTES	**Conditions for applying the fault finding procedure to stored faults:** The fault reappears after: – clearing the fault from the memory, – the valve has been actuated by the **AC036 EGR valve** command.
	Special notes: Use bornier **Elé. 1681** for all operations on the connectors of the engine management computer.

CC.1	***NOTES***	None.

Check the exhaust gas recirculation valve connections:
Check the engine management computer connections.
Repair if necessary.

Measure **the resistances** of the exhaust gas recirculation valve (***Pierburg*** or ***Cooper*** type):
– between **tracks 1 and 5**: **from 7.5 Ω to 8.5 Ω at + 20˚C**.

– For a ***Pierburg*** type exhaust gas recirculation valve:
  – between **tracks 2 and 4**: **2400 Ω to 5600 Ω at + 20˚C**,
  – between **tracks 2 and 6**: **1900 Ω to 6400 Ω at + 20˚C**,
  – between **tracks 4 and 6**: **800 Ω to 3800 Ω at + 20˚C**.

If one of the resistances is not correct, replace the exhaust gas recirculation valve.

With the exhaust gas recirculation valve disconnected, check the **insulation** to **+ 12 V** of the connection between:

Engine computer, **connector B track M1** → **track 5** of the exhaust gas recirculation valve connector

If the fault persists, replace the exhaust gas recirculation valve. Refer to the **Replacement of components** section and follow the correct procedure to replace the exhaust gas recirculation valve.

AFTER REPAIR	Deal with any other faults. Clear the fault memory. Switch off the ignition and carry out a road test followed by a test with the **diagnostic tool**.

GETtheMANUALS.org

DF325 **CONTINUED 1**	

CO.0	***NOTES***	**Special notes:** In the event of the simultaneous presence of the **DF209 EGR valve position sensor circuit CO.0** fault, check that the exhaust gas recirculation valve connector is connected correctly.

Check the exhaust gas recirculation valve connections:
Check the engine management computer connections.
Repair if necessary.

Measure **the resistances** of the exhaust gas recirculation valve (***Pierburg*** or ***Cooper*** type):
– between **tracks 1 and 5**: **from 7.5 Ω to 8.5 Ω at + 20˚C**.

– For a ***Pierburg*** type exhaust gas recirculation valve:
  – between **tracks 2 and 4**: **2400 Ω to 5600 Ω at + 20˚C**.
  – between **tracks 2 and 6**: **1900 Ω to 6400 Ω at + 20˚C**.
  – between **tracks 4 and 6**: **800 Ω to 3800 Ω at + 20˚C**.

If one of the resistances is not correct, replace the exhaust gas recirculation valve.

Check **the continuity and insulation** to **earth** of the connection between:

Engine computer, **connector B track M1** ⟶ **track 5** exhaust gas recirculation valve connector

Check **for + 12 V after relay feed** on **track 1** of the exhaust gas recirculation valve connector.

If the fault persists, replace the exhaust gas recirculation valve. Refer to the **Replacement of components** section and follow the correct procedure to replace the exhaust gas recirculation valve.

AFTER REPAIR	Deal with any other faults. Clear the fault memory. Switch off the ignition and carry out a road test followed by a test with the **diagnostic tool**.

GETtheMANUALS.org

DF325 **CONTINUED 2**	

1.DEF ***2.DEF*** ***3.DEF*** ***4.DEF***	***NOTES***	**Priorities when dealing with a number of faults:** Apply the interpretation of fault **DF209 EGR valve position sensor circuit** first, then fault **DF056 air flowmeter circuit**, 1.DEF if they are present.

Check the exhaust gas recirculation valve connections:
Check the engine management computer connections.
Repair if necessary.

Check for leaks in the air inlet circuit (above all between the air flowmeter and the turbocharger: use **test 4**) and the exhaust gas recirculation circuit (use **test 9**, part A).
Check **the continuity and insulation** of the connections between:

Engine computer, **connector B track G2** → **track 3** air flowmeter connector

Engine computer, **connector B track H4** → **track 5** of air flow sensor connector

Check for the **+ 5 V** feed on **track 3** of the air flow sensor connector, with the vehicle with a + after ignition feed.
Check for the **+ 12 V after relay** feed on **track 4** of the air flow sensor connector.
Check for **an earth** on **track 6** of the air flow sensor connector.
Apply the interpretation of parameter **PR132 Air flow** explained in this note, at hot idle speed (coolant temperature > 80˚C).
Carry out the necessary repairs.

AFTER REPAIR	Deal with any other faults. Clear the fault memory. Switch off the ignition and carry out a road test followed by a test with the **diagnostic tool**.

GETtheMANUALS.org

DF374 PRESENT OR STORED	COMPUTER 1.DEF: Overvoltage in the capacitor controlling the injectors 2.DEF: Undervoltage in the capacitor controlling the injectors

NOTES	Check the conformity of the **+ 12 V battery feed** on **tracks M2 and M3, connector B** of the engine management computer (excess voltage or micro breaks). If necessary, check the charging circuit. (see **Technical Note 6014A Charging circuit fault finding**).

IMPORTANT
A badly insulated or incorrectly positioned engine wiring harness may be susceptible to disruption caused by the voltage supply to the starter. This "electrical interference" disrupts the engine speed signal and causes this fault. It is often intermittent but is always accompanied by failure of the engine to start.
In the starting phase, check with the oscilloscope that there is no interference on the engine speed signal during the first engine rotations.
In the event of interference:
- check that the engine wiring and starter motor are correctly positioned.
- check that the engine speed signal connection is correctly cabled.

If the fault is still present:
Carefully check the clips and tabs of the **connections for each injector**.
If the fault is still present:
Clear the fault from the computer memory.
Switch off the ignition, wait for the end of the power latch*, then switch the ignition back on.
Start the engine and re-establish dialogue:
If the fault recurs, contact the Techline.

***** The immobiliser warning light will flash a few seconds after the ignition is switched off.

AFTER REPAIR	Deal with any other faults. Clear the fault memory. Switch off the ignition and carry out a road test followed by a test with the **diagnostic tool**.

GETtheMANUALS.org

DF436 STORED	DETECTION OF ENGINE MISFIRING 1.DEF: Cylinder 1 injector 2.DEF : Cylinder 2 injector 3.DEF : Cylinder 3 injector 4.DEF : Cylinder 4 injector

NOTES	**Conditions for applying the fault finding procedure to stored faults:** The fault reappears after: – the fault memory has been cleared, – starting the engine with a coolant temperature of 50 °C followed by a delay of **3 min** at idling speed.
	Priorities when dealing with a number of faults: Apply the interpretation of these faults first: **DF197 Fuel pressure signal**, present or stored. **DF040 Cylinder 1 injector circuit**, present or stored. **DF041 Cylinder 2 injector circuit**, present or stored. **DF042 Cylinder 3 injector circuit**, present or stored. **DF043 Cylinder 4 injector circuit**, present or stored. **Special notes:** Check the consistency between the stored injector codes and the ones engraved on each injector. Check the **insulation, continuity and the absence of interference resistance** by running **test 10**.

1.DEF ***2.DEF*** ***3.DEF*** ***4.DEF***	***NOTES***	**Before** replacing an injector, check that its sealing washer is in place and in good condition. **After** replacing an injector, follow the injector code programming procedure (see **Replacement of components** section).
		IMPORTANT To remove/refit injectors, obey the cleanliness guidelines and safety advice (defined in Section **13B** of the Workshop Repair Manual).

AFTER REPAIR	Deal with any other faults. Clear the fault memory. Switch off the ignition and carry out a road test followed by a test with the **diagnostic tool**.

GETtheMANUALS.org

DF436 **CONTINUED**	

1) If a single cylinder is declared with misfiring status:
– Check the condition of the engine by performing the compression test using the Clip Technic tool or special tool.
  – If the 4 cylinders have the same stroke speed, replace the injector identified by the fault.
  – If there is a difference between the cylinders, check the compression of the cylinder concerned.
  – If a compression is not correct, make the necessary repairs.
  – If the compression is correct, replace the injector concerned*.
– After the operation, clear the fault and perform a test, **with the engine at idle speed**, and the engine **temperature > 50 ˚C** for **2 minutes** and check that no faults appear on the diagnostic tool to validate the repairs.

2) If several cylinders are declared with misfiring status:
  – Select **Sub-function: FUEL CIRCUIT** on the diagnostic tool.
  – **Engine at idle speed**, **engine coolant temperature > 50 ˚C** for **2 mins**, display the flow correction values for each injector:

- **PR364 Cylinder no. 1 fuel flow correction,**
- **PR365 Cylinder no. 4 fuel flow correction,**
- **PR405 Cylinder no. 4 fuel flow correction,**
- **PR406 Cylinder no. 3 fuel flow correction.**

The **normal value** for flow correction for an injector is approximately **± 1 mm^3/stroke**. This tolerance may increase with time, but indicates an injector/cylinder fault if it exceeds **± 5 mm^3/stroke**.

a) If at least one of these values = ± 5 mm^3/cp:
– Check the condition of the engine by performing the Check cylinder balance test.
  – If the 4 cylinders have the same stroke speed, replace the injector* with the largest correction.
  – If there is a difference between the cylinders, check the compression with the flow correction **furthest from the normal value**.
  – If the compression test reveals a cylinder fault, carry out the necessary repairs.
  – If the compression is correct, replace the injector of the cylinder concerned*.
– Clear the fault and perform a test with the **engine at idle speed**, and the **engine coolant temperature > 50˚C** for **2 minutes** and check that no faults appear on the diagnostic tool and that the correction values do not reach ± 5 mm^3/stroke to confirm the repair:
– If an(other) cylinder(s) is (are) still declared in misfiring status, repeat starting at **2** (or **1**).
– If the fault does not recur, end the fault finding procedure.

If the problem is still present, contact the Techline.

* To remove/refit injectors, obey the cleanliness guidelines and safety advice (defined in Section **13B** of the Workshop Repair Manual).

AFTER REPAIR	Deal with any other faults. Clear the fault memory. Switch off the ignition and carry out a road test followed by a test with the **diagnostic tool**.

GETtheMANUALS.org

NOTES	Only check conformity after a full check with the **diagnostic tool**. The values shown in this conformity check are given as a guide. Execution conditions: **ENGINE OFF, IGNITION ON**.

MAIN SCREEN

Order	Function	Parameter or Status Check or Action		Display and notes	Fault finding
1	Supply	**ET001:**	Computer + after ignition feed	**PRESENT,** ignition on	In the event of a fault, apply the interpretation of **DF046 Battery voltage** or **DF222 Main relay**.
		PR071:	Computer feed voltage	**9 V < X < 16 V**	In the event of a fault, test the battery and carry out a fault finding procedure on the charging circuit.
		PR215:	Sensor supply voltage no. 1	**4.9 V < X < 5.1 V**	
		PR216:	Sensor supply voltage no. 2	**4.9 V < X < 5.1 V**	
2	Engine speed	**PR055:**	Engine speed	Indicates the engine's speed of rotation in rpm. **With the ignition on 0 rpm**	In the event of a fault, refer to the interpretation of fault **DF195 Camshaft sensor/engine speed consistency**.
		PR190:	Engine speed setpoint	**820 rpm ± 50**	According to the increase or decrease in the diagnostic tool's **Configuration** menu.
		PR014:	Idling speed correction	**X = 0 rpm ± 50**	
3	Injection configuration	**ET104:**	Injector code use	**YES**	In the event of a fault, consult the interpretation of **DF276 Injector code programming**.

GETtheMANUALS.org

NOTES	Only check conformity after a full check with the **diagnostic tool**. The values shown in this conformity check are given as a guide. Execution conditions: **ENGINE OFF, IGNITION ON**.

MAIN SCREEN (continued 1)

Order	Function	Parameter or Status Check or Action		Display and notes	Fault finding
4	Pressure	**PR035:**	Atmospheric pressure	Indicates the atmospheric pressure in mbar. The sensor is built into the computer. **750 mbar < X < 1030 mbar**	In the event of a fault, consult the interpretation of fault **DF200 Atmospheric pressure sensor**.
		PR038:	Rail pressure	**0 < X < 30 bar**	In the event of a fault, consult the interpretation for fault **DF192 Fuel pressure sensor circuit**.
		PR041:	Turbocharging pressure	**750 mbar < X < 1030 mbar**	In the event of a fault, refer to the interpretation of fault **DF199 Turbocharging pressure sensor circuit**.
5	Temperature	**PR058:**	Air temperature	Shows the inlet air temperature	In the event of a fault, consult the interpretation of fault **DF002 Air temperature sensor circuit**.
		PR063:	Fuel temperature	Gives the fuel temperature in ˚C.	In the event of a fault, consult the interpretation of fault **DF098 Fuel temperature sensor circuit**.
		PR064:	Coolant temperature	Gives the coolant temperature in ˚C.	In the event of a fault, consult the interpretation of fault **DF001 Coolant temperature sensor circuit**.

GETtheMANUALS.org

NOTES	Only check conformity after a full check with the **diagnostic tool**. The values shown in this conformity check are given as a guide. Execution conditions: **ENGINE OFF, IGNITION ON**.

MAIN SCREEN (CONTINUED 2)

Order	Function	Parameter or Status Check or Action	Display and notes	Fault finding
6	Speed signal	**PR089:** Vehicle speed	Indicates the vehicle speed in mph (km/h). This parameter is transmitted by the ABS computer. This signal is transmitted to the injection on the multiplex network.	In the event of a fault test the multiplex network. Check the ABS.

GETtheMANUALS.org

NOTES	Only check conformity after a full check with the **diagnostic tool**. The values shown in this conformity check are given as a guide. Execution conditions: **ENGINE OFF, IGNITION ON**.

AIR CIRC. (TURBO/INLET)

Order	Function	Parameter or Status Check or Action		Display and notes	Fault finding
1	Engine speed	**PR055:**	Engine speed	Indicates the engine's speed of rotation in rpm. **With the ignition on 0 rpm**	In the event of a fault, refer to the interpretation of fault **DF195 Camshaft sensor/engine speed consistency**.
2	Temperature	**PR058:**	Air temperature	Indicates the inlet air temperature in °C.	In the event of a fault, consult the interpretation of fault **DF002 Air temperature sensor circuit**.
3	Turbocharging	**PR009:**	Turbocharging pressure setpoint	**790 < X < 1010 mbar**	None.
		PR041:	Turbocharging pressure	**PR041 = PR035 ± 10 mbar**	In the event of a fault, refer to the interpretation of fault **DF199 Turbocharging pressure sensor**.
		PR209:	Turbocharging pressure loop difference	**X = PR009 - PR041 = ~ 0**	If **PR209** is significant, refer to the interpretation of the **AC004 Turbocharging solenoid valve** command.
		PR047:	Turbocharging pressure OCR	**X = 5%**	

GETtheMANUALS.org

NOTES	Only check conformity after a full check with the **diagnostic tool**. The values shown in this conformity check are given as a guide. Execution conditions: **ENGINE OFF, IGNITION ON**.

AIR CIRC. (TURBO/INLET) (CONTINUED)

Order	Function	Parameter or Status Check or Action		Display and notes	Fault finding
4	Air circulation	**PR035:**	Atmospheric pressure	Indicates the atmospheric pressure in mbar. The sensor is built into the computer. **Default value: 750 mbar.**	In the event of a fault, consult the interpretation of **DF200 Atmospheric pressure sensor**.
		PR132:	Air flow	**0 < X < 10 kg/h**	In the event of a fault, consult the interpretation of parameter **DF056 Air flow sensor circuit**.
		ET212:	Damper valve control	**INACTIVE**	In the event of a fault, consult the interpretation for fault **DF226 Damper valve circuit**.
		ET211:	Swirl flap control	**INACTIVE**	In the event of a fault, consult the interpretation of fault **DF068 Swirl flap control circuit**.
5	Exhaust gas recirculation	**PR220:**	EGR valve OCR	**X = 5%**	In the event of a fault, go to the fault finding for the **AC036 EGR valve** command.
6	Sensor feed	**PR073:**	Air flowmeter feed voltage	**0.5 V < X < 1 V**	In the event of a fault, consult the interpretation of parameter **DF056 Air flow sensor circuit**.
		PR071:	Computer feed voltage	**9 V < X < 16 V**	In the event of a fault, test the battery and carry out a fault finding procedure on the charging circuit.
		PR215:	Sensor supply voltage no. 1	**4.9 V < X < 5.1 V**	
		PR216:	Sensor supply voltage no. 2	**4.9 V < X < 5.1 V**	

GETtheMANUALS.org

NOTES	Only check conformity after a full check with the **diagnostic tool**. The values shown in this conformity check are given as a guide. Execution conditions: **ENGINE OFF, IGNITION ON**.

STARTING

Order	Function	Parameter or Status Check or Action		Display and notes	Fault finding
1	Power supply	**ET001:**	Computer + after ignition feed	Ignition on **PRESENT**	In the event of a fault, apply the interpretation of **DF046 Battery voltage** or **DF222 Main relay**.
		PR071:	Computer feed voltage	**9 V < X < 16 V**	In the event of a fault, test the battery and carry out a fault finding procedure on the charging circuit.
		PR215:	Sensor supply voltage no. 1	**4.9 V < X < 5.1 V**	
		PR216:	Sensor supply voltage no. 2	**4.9 V < X < 5.1 V**	
2	Engine immobiliser	**ET341:**	Immobiliser code programmed	**YES**	In the event of a fault, consult the fault finding procedure for the immobiliser.
		ET003:	Engine immobiliser	**INACTIVE**	
3	Synchronisation	**ET238:**	Synchronisation	**STANDBY** then becomes "completed" once the engine is started.	Any phase difference between the camshaft sensor and the TDC sensor (belt stretched or timing offset) will lead to the appearance of **DF195 Engine speed/camshaft sensor consistency**. If starting is impossible: while the engine is being turned by the starter, the status is **IN PROGRESS** and will only change to **COMPLETED** if the engine starts.

GETtheMANUALS.org

NOTES	Only check conformity after a full check with the **diagnostic tool**. The values shown in this conformity check are given as a guide. Execution conditions: **ENGINE OFF, IGNITION ON**.

STARTING (Continued)

Order	Function	Parameter or Status Check or Action	Display and notes	Fault finding
4	Control	**ET010:** Low pressure pump relay control	**ACTIVE** with the CP1 high pressure pump. **INACTIVE** with the CP3 high pressure pump.	In the event of a fault, consult the interpretation of **DF207 Low pressure pump relay circuit**.
5		**ET007:** Pre-postheating control	**INACTIVE** **Status ET007 is ACTIVE a few seconds after the ignition is switched on, and for postheating**	In the event of a fault, consult the interpretation of fault **DF017 Preheating unit control circuit**.

GETtheMANUALS.org

NOTES	Only check conformity after a full check with the **diagnostic tool**. The values shown in this conformity check are given as a guide. Execution conditions: **ENGINE OFF, IGNITION ON**.

COLD LOOP

Order	Function	Parameter or Status Check or Action		Display and notes	Fault finding
1	Engine speed	**PR055:**	Engine speed	Indicates the engine's speed of rotation in rpm. **Ignition on at 0 rpm**	In the event of a fault, refer to the interpretation of fault **DF195 Camshaft sensor/engine speed consistency**.
2	Speed signal	**PR089:**	Vehicle speed	Indicates the vehicle speed in mph (km/h). This parameter is transmitted by the ABS computer. This signal is transmitted to the injection on the multiplex network.	In the event of a fault test the multiplex network. Check the ABS.
3	Coolant temperature	**PR064:**	Coolant temperature	Shows the engine coolant temperature in ˚C	In the event of a fault, refer to the interpretation of **DF001 Coolant temperature sensor circuit**.
4	Driver control	**ET088:**	Compressor actuation request	**NO**	If the air conditioning is authorised or if the compressor is actuated, refer to the interpretation for **ET088** and **ET004**.
		ET004:	Air conditioning authorisation	**NO**	
5	Engine cooling	**ET143:**	Low-speed fan assembly relay control	**Ignition on** **< 80˚C INACTIVE**	If the fan assemblies are supplied with ignition on, the injection system may be in defect mode. Carry out a system fault test and refer to the interpretation of any faults.
		ET144:	High-speed fan assembly relay control		

GETtheMANUALS.org

NOTES	Only check conformity after a full check with the **diagnostic tool**. The values shown in this conformity check are given as a guide. Execution conditions: **ENGINE OFF, IGNITION ON**.

HEATING

Order	Function	Parameter or Status Check or Action		Display and notes	Fault finding
1	Engine speed	**PR055:**	Engine speed	Indicates the engine's speed of rotation in rpm. **Ignition on at 0 rpm**	In the event of a fault, refer to the interpretation of fault **DF195 Camshaft sensor/engine speed consistency**.
2	Coolant temperature	**PR064:**	Coolant temperature	Shows the engine coolant temperature in ˚C	In the event of a fault, refer to the interpretation of **DF001 Coolant temperature sensor circuit**.
3	Relay control	**ET205:**	Thermoplunger no. 1 relay control	**ACTIVE or INACTIVE.** Depending on the computer programming, air and coolant temperatures.	None.
		ET206:	Thermoplunger no. 2 relay control		
		ET207:	Thermoplunger no. 3 relay control		

GETtheMANUALS.org

NOTES	Only check conformity after a full check with the **diagnostic tool**. The values shown in this conformity check are given as a guide. Execution conditions: **ENGINE OFF, IGNITION ON**.

FUEL CIRCUIT

Order	Function	Parameter or Status Check or Action		Display and notes	Fault finding
1	Engine speed	**PR055:**	Engine speed	**Indicates the engine's speed of rotation in rpm. Ignition on at 0 rpm**	In the event of a fault, refer to the interpretation of fault **DF195 Camshaft sensor/engine speed consistency**.
2	Injection configuration	**ET104:**	Injector code use	**YES**	In the event of a fault, consult the interpretation of **DF276 Injector code programming**.
3	Temperature	**PR063:**	Fuel temperature	**Indicates the fuel temperature Default value: 60˚C.**	In the event of a fault, consult the interpretation of **DF098 Fuel temperature sensor circuit**.
4	Pressure	**PR008:**	Rail reference pressure	**Indicates the theoretical pressure value for optimum engine operation X = 250 ± 50 bar**	In the event of a fault, consult the interpretation of fault **DF208 Fuel pressure solenoid valve circuit.**
		PR038:	Rail pressure	**X = 0 bar Default value: 250 bar.**	If the engine has just been stopped, wait a few seconds to obtain this value.
		PR213:	Rail pressure loop difference	**X = PR008 - PR038 X = 0 stationary**	
5	Flow	**PR203:**	Fuel flow setpoint at idle speed	**X = 0.0 mm^3/stroke**	None.
		PR017:	Fuel flow	**Ignition on 10 < X < 80 mm^3/ stroke**	None.
		PR302:	Regulated fuel flow	**X = ~ 25000 mm^3/s**	None.

GETtheMANUALS.org

NOTES	Only check conformity after a full check with the **diagnostic tool**. The values shown in this conformity check are given as a guide. Execution conditions: **ENGINE OFF, IGNITION ON**.

FUEL CIRCUIT (continued)

Order	Function	Parameter or Status Check or Action		Display and notes	Fault finding
6	Power supply	**PR071:**	Computer feed voltage	**9 V < X < 16 V**	In the event of a fault, test the battery and carry out a fault finding procedure on the charging circuit.
7	Flow correction	**PR364:**	Cylinder no. 1 fuel flow correction	**X = 0.0 mm^3/stroke**	In the event of a fault, consult **test 10 "Poor injector operation"**.
		PR405:	Cylinder no. 2 fuel flow correction		
		PR406:	Cylinder no. 3 fuel flow correction		
		PR365:	Cylinder no. 4 fuel flow correction		
8	Control	**ET010:**	Low pressure pump relay control	**ACTIVE** with the CP1 high pressure pump. **INACTIVE** with the CP3 high pressure pump.	In the event of a fault, consult the interpretation of **DF207 Low pressure pump relay circuit**.

GETtheMANUALS.org

NOTES	Only check conformity after a full check with the **diagnostic tool**. The values shown in this conformity check are given as a guide. Execution conditions: **ENGINE OFF, IGNITION ON**.

EMISSION CONTROL/OBD

Order	Function	Parameter or Status Check or Action		Display and notes	Fault finding
1	Engine speed	**PR055:**	Engine speed	**Indicates the engine's speed of rotation in rpm. Ignition on at 0 rpm**	In the event of a fault, refer to the interpretation of fault **DF195 Camshaft sensor/engine speed consistency**.
2	Exhaust gas recirculation	**PR220:**	EGR valve OCR	**X = 5%**	In the event of a fault, go to the fault finding for the **AC036 EGR valve** command.
		PR022:	EGR valve position loop difference	**0 < X < 5 mV** (depending on programming).	
		PR051:	EGR valve position feedback	**0.75 < X < 1.5 V** (depending on programming).	
		ET272:	First EGR offset programming	**COMPLETED**	
		PR128:	First EGR valve offset	**0.75 < X < 1.5 V**	
		PR129:	Last EGR valve offset	**0.75 < X < 1.5 V**	
3	Flow	**PR132:**	Air flow	**0 < X < 10 kg/h** (depending on programming).	In the event of a fault, consult the interpretation of parameter **DF056 Air flow sensor circuit**.

GETtheMANUALS.org

NOTES	Only check conformity after a full check with the **diagnostic tool**. The values shown in this conformity check are given as a guide. Execution conditions: **ENGINE OFF, IGNITION ON**.

DRIVER PARAMETERS

Order	Function	Parameter or Status Check or Action		Display and notes	Fault finding
1	Engine speed	**PR055:**	Engine speed	Indicates the engine's speed of rotation in rpm. **Ignition on at 0 rpm**	In the event of a fault, refer to the interpretation of fault **DF195 Camshaft sensor/engine speed consistency**.
		PR190:	Engine speed setpoint	**820 rpm ± 50**	According to the increase or decrease in the diagnostic tool's **Configuration** menu.
2	Accelerator pedal sensor	**ACCELERATOR PEDAL NO LOAD**			
		PR147:	Pedal potentiometer voltage gang 1	**X = 0.75 V ± 0.09**	**IMPORTANT** Approximately every **5 seconds**, the computer performs a test to set **PR148** at **0 V**. This corresponds to normal operation.
		PR030:	Pedal load	**X = 0%**	
		PR217:	Pedal load (gang no. 1)	**X = 0%**	
		PR218:	Pedal load (gang no. 2)	**X = 0%**	
		PR148:	Pedal potentiometer voltage gang 2	**X = 0.37 V ± 0.05**	

GETtheMANUALS.org

NOTES	Only check conformity after a full check with the **diagnostic tool**. The values shown in this conformity check are given as a guide. Execution conditions: **ENGINE OFF, IGNITION ON**.

DRIVER PARAMETERS (continued)

Order	Function	Parameter or Status Check or Action		Display and notes	Fault finding
3	Accelerator pedal sensor (continued)	**ACCELERATOR PEDAL FULL LOAD**			**IMPORTANT** Approximately every **5 seconds**, the computer performs a test to set **PR148** at **0 V**. This corresponds to normal operation.
		PR147:	Pedal potentiometer voltage gang 1	**X = 4.25 V ± 0.31**	
		PR030:	Pedal load without CC/SL	**100 < X < 127%**	
		PR030:	Pedal load with CC/SL	**100 < X < 139%**	
		PR217:	Pedal load (gang no. 1) without CC/SL	**105 < X < 127%**	
		PR217:	Pedal load (gang no. 1) with CC/SL	**X = 134% ± 5**	
		PR218:	Pedal load (gang no. 2) without CC/SL	**105 < X < 127%**	
		PR218:	Pedal load (gang no. 2) with CC/SL	**X = 134% ± 5**	
		PR148:	Pedal potentiometer voltage gang 2	**X = 2.12 V ± 0.16**	
4	Brake pedal position	**ET122:**	Brake contact no. 1 signal	Brake pedal released **ABSENT**	Nonconformity of the brake signals and or the clutch switch signals can cause "engine racing" during gear changes.
		ET123:	Brake switch no. 2 signal	Brake pedal released **ABSENT**	
5	Clutch pedal position	**ET233:**	Clutch pedal	Clutch pedal released **RELEASED**	

GETtheMANUALS.org

NOTES	Only check conformity after a full check with the **diagnostic tool**. The values shown in this conformity check are given as a guide. Execution conditions: **ENGINE OFF, IGNITION ON**.

CRUISE CONTROL/SPEED LIMITER

Order	Function	Parameter or Status Check or Action		Display and notes	Fault finding
1	Cruise control/ Speed limiter	**PR089:**	Vehicle speed	Indicates the vehicle speed in mph (km/h). This parameter is transmitted by the ABS computer. This signal is transmitted to the injection on the multiplex network.	In the event of a fault test the multiplex network. Check the ABS.
		PR130:	Cruise control setpoint	Shows the cruise control cruising speed requested by the driver.	Cruise control can only be activated for a speed V > 18 mph (30 km/h).
		ET042:	Cruise control/ speed limiter	**INACTIVE:** when no button is pressed.	In the event of a fault, refer to the interpretation of status **ET042**.
				CRUISE CONTROL: cruise control ON/OFF button pressed	Lights the green warning light on the instrument panel.
				SPEED LIMITER: speed limiter ON/OFF button pressed	Lights the orange warning light on the instrument panel.
		ET413:	Cruise control/ speed limiter function	**INACTIVE:** When no button is pressed.	In the event of a fault, refer to the interpretation of statuses **ET042 Cruise control/Speed limiter, ET413 Cruise control/Speed limiter function and ET415 Cruise control/Speed limiter deactivation**.
				INCREASE: increase button pressed	
				DECREASE: decrease button pressed	
				CANCEL: "0" button pressed	
				REPEAT: R button pressed	

GETtheMANUALS.org

NOTES	Only check conformity after a full check with the **diagnostic tool**. The values shown in this conformity check are given as a guide. Execution conditions: **ENGINE OFF, IGNITION ON**.

CRUISE CONTROL/SPEED LIMITER (CONTINUED 1)

Order	Function	Parameter or Status Check or Action		Display and notes	Fault finding
2	Cruise control/ speed limiter (continued)	**ET415:**	Deactivation of cruise control/ speed limiter note: Cruise control can only be activated for a Vehicle speed > 18 mph (30 km/h)	**INACTIVE:** when no button is pressed.	The cruise control and speed limiter functions can be deactivated by various events. **IMPORTANT** Certain deactivations are stored; to reinitialise this status use **RZ007 Fault memory** In the event of a fault, refer to the interpretation of statuses **ET042 Cruise control/Speed limiter, ET413 Cruise control/ Speed limiter function and ET415 Cruise control/Speed limiter deactivation**.
				STATUS 1: vehicle speed not updated.	
				STATUS 2: vehicle speed invalid.	
				STATUS 3: cruise control or speed limiter fault.	
				STATUS 4: inconsistency between the request and the vehicle speed.	
				STATUS 5: fault detected by injection computer	
				STATUS 6: gear selector lever in neutral	
				STATUS 7: disconnection of engine/gearbox	
				STATUS 8: traction control request.	
				STATUS 9: brake pedal depressed.	
				STATUS 10: suspend button pressed	

GETtheMANUALS.org

NOTES	Only check conformity after a full check with the **diagnostic tool**. The values shown in this conformity check are given as a guide. Execution conditions: **ENGINE OFF, IGNITION ON**.

CRUISE CONTROL/SPEED LIMITER (CONTINUED 2)

Order	Function	Parameter or Status Check or Action		Display and notes	Fault finding
3		**PR178:**	Cruise control switch voltage	**X = 4.9 V ± 0.2** switches in rest position X = **0.2 ± 0.2 V O** pressed X = **3.7 ± 0.2 V R** pressed X = **2.4 ± 0.2 V** if **+** pressed X = **1.3 ± 0.2 V** if **-** pressed	None.
4	Brake pedal position	**ET122:**	Brake contact no. 1 signal	Brake pedal released **ABSENT**	Nonconformity of the brake signals and or the clutch switch signals can cause "engine racing" during gear changes.
		ET123:	Brake switch no. 2 signal	Brake pedal released **ABSENT**	
5	Clutch pedal position	**ET233:**	Clutch pedal	Clutch pedal released **RELEASED**	

GETtheMANUALS.org

NOTES	Only check conformity after a full check with the **diagnostic tool**. The values shown in this conformity check are given as a guide. Execution conditions: **ENGINE OFF, IGNITION ON**.

ENGINE COOLING

Order	Function	Parameter or Status Check or Action		Display and notes	Fault finding
1	Coolant temperature	**PR064:**	Coolant temperature	Shows the engine coolant temperature in ˚C	In the event of a fault, refer to the interpretation of **DF001 Coolant temperature sensor circuit**.
2	Fan assemblies	**ET143:**	Low-speed fan assembly relay control	**Engine ignition on < 80˚ INACTIVE**	If the fan assemblies are supplied with ignition on, the injection system may be in defect mode. Carry out a system fault test and refer to the interpretation of any faults.
		ET144:	High-speed fan assembly relay control		
3	Sensor feed	**PR071:**	Computer feed voltage	**9 V < X < 16 V**	In the event of a fault, test the battery and carry out a fault finding procedure on the charging circuit.
		PR215:	Sensor supply voltage no. 1	**4.9 V < X < 5.1 V**	
		PR216:	Sensor supply voltage no. 2	**4.9 V < X < 5.1 V**	

GETtheMANUALS.org

NOTES	Only check conformity after a full check with the **diagnostic tool**. The values shown in this conformity check are given as a guide. Execution conditions: **ENGINE OFF, IGNITION ON**.

IGNITION/PREHEATING

Order	Function	Parameter or Status Check or Action		Display and notes	Fault finding
1	Power supply	**ET001:**	Computer + after ignition feed	Ignition on **PRESENT**	In the event of a fault, apply the interpretation for **DF046 Battery voltage or DF222 Main relay**.
2	Engine speed	**PR055:**	Engine speed	Indicates the engine's speed of rotation in rpm.	In the event of a fault, refer to the interpretation of fault **DF195 Camshaft sensor/engine speed consistency**.
3	Temperature	**PR058:**	Air temperature	Indicates the inlet air temperature in ˚C.	In the event of a fault, consult the interpretation of fault **DF002 Air temperature sensor circuit**.
		PR064:	Coolant temperature	Gives the coolant temperature in ˚C.	In the event of a fault, refer to the interpretation of **DF001 Coolant temperature sensor circuit**.
4	Preheating	**ET007:**	Pre-postheating unit control	**Status ET007 is ACTIVE a few seconds after the ignition is switched on, and for postheating**	In the event of a fault, (**ET007** locked in **ACTIVE**), refer to the interpretation of fault **DF017 Preheating unit control circuit**.
		ET120:	Pre-postheating signal	**ABSENT** as soon as pre-postheating has finished.	
5	Sensor feed	**PR071:**	Computer feed voltage	**9 V < X < 16 V**	In the event of a fault, test the battery and carry out a fault finding procedure on the charging circuit.

GETtheMANUALS.org

NOTES	Only check conformity after a full check with the **diagnostic tool**. The values shown in this conformity check are given as a guide. Execution conditions: **engine idling and warm, coolant temperature > 80˚C**.

MAIN SCREEN

Order	Function	Parameter or Status Check or Action		Display and notes	Fault finding
1	Power supply	**ET001:**	Computer + after ignition feed	**PRESENT**	In the event of a fault, apply the interpretation of **DF046 Battery voltage** or **DF222 Main relay**.
		PR071:	Computer feed voltage	**9 V < X < 16 V**	In the event of a fault, test the battery and carry out a fault finding procedure on the charging circuit.
		PR215:	Sensor supply voltage no. 1	**4.9 V < X < 5.1 V**	
		PR216:	Sensor supply voltage no. 2	**4.9 V < X < 5.1 V**	
2	Engine speed	**PR055:**	Engine speed	Indicates the engine's speed of rotation in rpm. **820 rpm ± 50**	In the event of a fault, refer to the interpretation of fault **DF195 Camshaft sensor/engine speed consistency**.
		PR190:	Engine speed setpoint	**820 rpm ± 50**	According to the increase or decrease in the diagnostic tool's **Configuration** menu.
		PR014:	Idling speed correction	**X = 0 rpm ± 50**	
3	Injection configuration	**ET104:**	Injector code use	**YES**	In the event of a fault, consult the interpretation of **DF276 Injector code programming**.

GETtheMANUALS.org

NOTES	Only check conformity after a full check with the **diagnostic tool**. The values shown in this conformity check are given as a guide. Execution conditions: **engine idling and warm, coolant temperature > 80˚C**.

MAIN SCREEN (SUITE)

Order	Function	Parameter or Status Check or Action		Display and notes	Fault finding
4	Pressure	**PR035:**	Atmospheric pressure	Indicates the atmospheric pressure in mbar. The sensor is built into the computer. **Default value: 750 mbar.**	In the event of a fault, consult the interpretation of fault **DF200 Atmospheric pressure sensor**.
		PR038:	Rail pressure	**230 mbar < X < 330 bar**	In the event of a fault, consult the interpretation for fault **DF192 Fuel pressure sensor circuit**.
		PR041:	Turbocharging pressure	**750 mbar < X < 1030 mbar**	In the event of a fault, refer to the interpretation of fault **DF199 Turbocharging pressure sensor circuit**.
5	Temperature	**PR058:**	Air temperature	Shows the inlet air temperature	In the event of a fault, consult the interpretation of fault **DF002 Air temperature sensor circuit**.
		PR063:	Fuel temperature	Shows the fuel temperature.	None.
		PR064:	Coolant temperature	Gives the coolant temperature in ˚C.	In the event of a fault, consult the interpretation of fault **DF001 Coolant temperature sensor circuit.**
6	Speed signal	**PR089:**	Vehicle speed	Indicates the vehicle speed in mph (km/h). This parameter is transmitted by the ABS computer. This signal is transmitted to the injection on the multiplex network.	In the event of a fault test the multiplex network. Check the ABS.

GETtheMANUALS.org

NOTES	Only check conformity after a full check with the **diagnostic tool**. The values shown in this conformity check are given as a guide. Execution conditions: **engine idling and warm, coolant temperature > 80˚C**.

AIR CIRC. (TURBO/INLET)

Order	Function	Parameter or Status Check or Action		Display and notes	Fault finding
1	Engine speed	**PR055:**	Engine speed	Indicates the engine's speed of rotation in rpm. **820 rpm ± 50**	In the event of a fault, refer to the interpretation of fault **DF195 Camshaft sensor/engine speed consistency**.
2	Temperature	**PR058:**	Air temperature	Indicates the inlet air temperature in ˚C.	In the event of a fault, consult the interpretation of fault **DF002 Air temperature sensor circuit**.
3	Turbocharging	**PR009:**	Turbocharging pressure setpoint	**790 mbar < X < 1030 mbar**	None.
		PR041:	Turbocharging pressure	**PR041 = PR035 ± 20 mbar**	In the event of a fault, refer to the interpretation of fault **DF199 Turbocharging pressure sensor**.
		PR209:	Turbocharging pressure loop difference	**0 < X = PR009 - PR041 < 40 mbar**	If **PR209** is significant, refer to the interpretation of the **AC004 Turbocharging solenoid valve** command.
		PR047:	Turbocharging pressure OCR*	**50 < X < 95%**	

*OCR: Opening Cyclic Ratio

GETtheMANUALS.org

NOTES	Only check conformity after a full check with the **diagnostic tool**. The values shown in this conformity check are given as a guide. Execution conditions: **engine idling and warm, coolant temperature > 80˚C**.

AIR CIRC. (TURBO/INLET) (CONTINUED)

Order	Function	Parameter or Status Check or Action		Display and notes	Fault finding
4	Air circulation	**PR035:**	Atmospheric pressure	Indicates the atmospheric pressure in mbar. The sensor is built into the computer. **Default value: 750 mbar.**	In the event of a fault, consult the interpretation of **DF200 Atmospheric pressure sensor**.
		PR132:	Air flow	**20 kg/h < X < 60 kg/h**	In the event of a fault, consult the interpretation of parameter **DF056 Air flow sensor circuit**.
		ET212:	Damper valve control	**INACTIVE**	In the event of a fault, consult the interpretation for fault **DF226 Damper valve circuit**.
5	Exhaust gas recirculation	**PR220:**	EGR valve OCR	**X = from 5% or 40% ± 5%** (depending on programming).	In the event of a fault, go to the fault finding for the **AC036 EGR valve** command.
6	Air circulation	**ET211:**	Swirl flap control	**INACTIVE**	In the event of a fault, consult the interpretation of fault **DF068 Swirl flap control circuit**.
7	Sensor feed	**PR073:**	Air flowmeter feed voltage	**1 V < X < 3 V**	In the event of a fault, consult the interpretation of parameter **DF056 Air flow sensor circuit**.
		PR071:	Computer feed voltage	**9 V < X < 16 V**	In the event of a fault, test the battery and carry out a fault finding procedure on the charging circuit.
		PR215:	Sensor supply voltage no. 1	**4.9 V < X < 5.1 V**	
		PR216:	Sensor supply voltage no. 2	**4.9 V < X < 5.1 V**	

GETtheMANUALS.org

NOTES	Only check conformity after a full check with the **diagnostic tool**. The values shown in this conformity check are given as a guide. Execution conditions: **engine idling and warm, coolant temperature > 80˚C**.

STARTING

Order	Function	Parameter or Status Check or Action		Display and notes	Fault finding
1	Power supply	**ET001:**	Computer + after ignition feed	**PRESENT**	In the event of a fault, apply the interpretation of **DF046 Battery voltage** or **DF222 Main relay**.
		PR071:	Computer feed voltage	**9 V < X < 16 V**	In the event of a fault, test the battery and carry out a fault finding procedure on the charging circuit.
		PR215:	Sensor supply voltage no. 1	**4.9 V < X < 5.1 V**	
		PR216:	Sensor supply voltage no. 2	**4.9 V < X < 5.1 V**	
2	Engine immobiliser	**ET341:**	Immobiliser code programmed	**YES**	In the event of a fault, consult the fault finding procedure for the immobiliser.
		ET003:	Engine immobiliser	**INACTIVE**	
3	Synchronisation	**ET238:**	Synchronisation	**COMPLETED**	Any phase difference between the camshaft sensor and the TDC sensor (belt stretched or timing offset) will lead to the appearance of **DF195 Engine speed/camshaft sensor consistency**. If starting is impossible: during rotations with the starter on, the status becomes **IN PROGRESS** and will only change to **COMPLETED** if the engine starts.

GETtheMANUALS.org

NOTES	Only check conformity after a full check with the **diagnostic tool**. The values shown in this conformity check are given as a guide. Execution conditions: **engine idling and warm, coolant temperature > 80˚C**.

STARTING (Continued)

Order	Function	Parameter or Status Check or Action	Display and notes	Fault finding
4	Control	**ET010:** Low pressure pump relay control	Status: **ACTIVE**, as soon as the ignition is switched on. Becomes **INACTIVE**, as soon as the engine is running, or after a few seconds if starting fails (high pressure CP3 pump). --- **Status: ACTIVE**, as soon as the ignition is switched on if the engine is running. Becomes **INACTIVE** after a few seconds if starting fails (CP1 high pressure pump).	In the event of a fault, consult the interpretation of **DF207 Low pressure pump relay circuit**.
		ET007: Pre-postheating control	**Status: ACTIVE** When the ignition is switched on and until pre/post-heating ends.	In the event of a fault, consult the interpretation of fault **DF017 Preheating unit control circuit**.
5		**ET120:** Pre-postheating signal	**Status: ABSENT** as soon as pre-postheating is completed	

GETtheMANUALS.org

NOTES	Only check conformity after a full check with the **diagnostic tool**. The values shown in this conformity check are given as a guide. Execution conditions: **engine idling and warm, coolant temperature > 80˚C**.

COLD LOOP

Order	Function	Parameter or Status Check or Action		Display and notes	Fault finding
1	Engine speed	**PR055:**	Engine speed	Indicates the engine's speed of rotation in rpm. **820 rpm ± 50**	In the event of a fault, refer to the interpretation of fault **DF195 Camshaft sensor/ engine speed consistency**.
2	Speed signal	**PR089:**	Vehicle speed	Indicates the vehicle speed in mph (km/h). This parameter is transmitted by the ABS computer. This signal is transmitted to the injection on the multiplex network.	In the event of a fault test the multiplex network. Check the ABS.
3	Coolant temperature	**PR064:**	Coolant temperature	Gives the coolant temperature in ˚C.	In the event of a fault, refer to the interpretation of **DF001 Coolant temperature sensor circuit**.
4	Driver control	**ET088:**	Compressor actuation request	**YES**	If the air conditioning is authorised or if the compressor is actuated, refer to the interpretation for **ET088** and **ET004**.
		ET004:	Air conditioning authorisation	**YES**	
5	Engine cooling	**ET143:**	Low-speed fan assembly relay control	**Engine running > 80˚C ACTIVE or ET088 = YES**	If the fan assemblies are supplied with the ignition on, the injection may be in defect mode. Carry out a system fault test and refer to the interpretation of any faults.
		ET144:	High-speed fan assembly relay control	**Engine running > 80˚C INACTIVE**	

GETtheMANUALS.org

NOTES	Only check conformity after a full check with the **diagnostic tool**. The values shown in this conformity check are given as a guide. Execution conditions: **engine idling and warm, coolant temperature > 80˚C**.

HEATING

Order	Function	Parameter or Status Check or Action		Display and notes	Fault finding
1	Engine speed	**PR055:**	Engine speed	Indicates the engine's speed of rotation in rpm. **820 rpm ± 50**	In the event of a fault, refer to the interpretation of fault **DF195 Camshaft sensor/engine speed consistency**.
2	Coolant temperature	**PR064:**	Coolant temperature	Shows the engine coolant temperature in ˚C	In the event of a fault, refer to the interpretation of **DF001 Coolant temperature sensor circuit**.
3	Relay control	**ET205:**	Thermoplunger no. 1 relay control	**ACTIVE or INACTIVE.** Depending on the computer programming, air and coolant temperatures.	None.
		ET206:	Thermoplunger no. 2 relay control		
		ET207:	Thermoplunger no. 3 relay control		

GETtheMANUALS.org

NOTES	Only check conformity after a full check with the **diagnostic tool**. The values shown in this conformity check are given as a guide. Execution conditions: **engine idling and warm, coolant temperature > 80˚C**.

FUEL CIRCUIT

Order	Function	Parameter or Status Check or Action		Display and notes	Fault finding
1	Engine speed	**PR055:**	Engine speed	Indicates the engine's speed of rotation in rpm. **820 rpm ± 50**	In the event of a fault, refer to the interpretation of fault **DF195 Camshaft sensor/engine speed consistency**.
2	Injection configuration	**ET104:**	Injector code use	**YES**	In the event of a fault, consult the interpretation of **DF276 Injector code programming**.
3	Temperature	**PR063:**	Fuel temperature	**Indicates the fuel temperature** **Default value: 60˚C**	In the event of a fault, consult the interpretation of **DF098 Fuel temperature sensor circuit**.
4	Pressure	**PR008:**	Rail reference pressure	**Indicates the theoretical pressure value for optimum engine operation** **230 bar < X < 330 bar**	In the event of a fault, consult the interpretation of fault **DF208 Fuel pressure solenoid valve circuit.**
		PR038:	Rail pressure	**230 bar < X < 330 bar** **Default value: 250 bar.**	If the engine has just been stopped, wait a few seconds to obtain this value.
		PR213:	Rail pressure loop difference	**X = PR008 - PR038**	
5	Flow	**PR203:**	Fuel flow setpoint at idle speed	**4 < X < 10 mm^3/stroke**	None.
		PR017:	Fuel flow	**4 < X < 20 mm^3/stroke**	None.
		PR302:	Regulated fuel flow	**700 < X < 1800 mm^3/s**	None.

GETtheMANUALS.org

NOTES	Only check conformity after a full check with the **diagnostic tool**. The values shown in this conformity check are given as a guide. Execution conditions: **engine idling and warm, coolant temperature > 80˚C**.

FUEL CIRCUIT (continued)

Order	Function	Parameter or Status Check or Action		Display and notes	Fault finding
6	Power supply	**PR071:**	Computer feed voltage	**9 V < X < 16 V**	In the event of a fault, test the battery and carry out a fault finding procedure on the charging circuit.
7	Flow correction	**PR364:**	Cylinder no. 1 fuel flow correction	**- 1 mm^3 /cp < X < 1 mm^3 / stroke**	In the event of a fault, consult **test 10 Poor injector operation**.
		PR405:	Cylinder no. 2 fuel flow correction		
		PR406:	Cylinder no. 3 fuel flow correction		
		PR365:	Cylinder no. 4 fuel flow correction		
8	Control	**ET010:**	Low pressure pump relay control	Status: **ACTIVE**, as soon as the ignition is switched on. Becomes **INACTIVE**, as soon as the engine is running, or after a few seconds if starting fails (high pressure CP3 pump). **Status: ACTIVE**, as soon as the ignition is switched on if the engine is running. Becomes **INACTIVE** after a few seconds if starting fails (CP1 high pressure pump).	In the event of a fault, consult the interpretation of **DF207 Low pressure pump relay circuit**.

GETtheMANUALS.org

NOTES	Only check conformity after a full check with the **diagnostic tool**. The values shown in this conformity check are given as a guide. Execution conditions: **engine idling and warm, coolant temperature > 80˚C**.

EMISSION CONTROL/OBD

Order	Function	Parameter or Status Check or Action		Display and notes	Fault finding
1	Engine speed	**PR055:**	Engine speed	Indicates the engine's speed of rotation in rpm. **820 rpm ± 50**	In the event of a fault, refer to the interpretation of fault **DF195 Camshaft sensor/engine speed consistency**.
2	Exhaust gas recirculation	**PR220:**	EGR valve OCR	**X = 5% or 40% ± 5** (depending on programming).	In the event of a fault, go to the fault finding for the **AC036 EGR valve** command.
		PR022:	EGR valve position loop difference	**0 < X < 5 mV** (depending on programming).	
		PR051:	EGR valve position feedback	**0.75 < X < 1.5 V** (depending on programming).	
		ET272:	First EGR offset programming	**COMPLETED**	
		PR128:	First EGR valve offset	**0.75 < X < 1.5 V**	
		PR129:	Last EGR valve offset	**0.75 < X < 1.5 V**	
3	Flow	**PR132:**	Air flow	**20 < X < 60 kg/h**	In the event of a fault, consult the interpretation of parameter **DF056 Air flow sensor circuit**.

GETtheMANUALS.org

NOTES	Only check conformity after a full check with the **diagnostic tool**. The values shown in this conformity check are given as examples. Execution conditions: **engine idling and warm, coolant temperature > 80˚C**.

DRIVER PARAMETERS

Order	Function	Parameter or Status Check or Action		Display and notes	Fault finding
1	Engine speed	**PR055:**	Engine speed	Gives the engine's rotational speed in rpm. **820 rpm ± 50**	In the event of a fault, refer to the interpretation of fault **DF195 Camshaft sensor/engine speed consistency**.
		PR190:	Engine speed setpoint	**820 rpm ± 50**	According to the increase or decrease in the diagnostic tool's **Configuration** menu.
2	Accelerator pedal sensor	**ACCELERATOR PEDAL NO LOAD**			
		PR147:	Pedal potentiometer voltage gang 1	**X = 0.75 V ± 0.09**	**IMPORTANT** Approximately every **5 seconds** the computer performs a test to set **PR218** at **0 V**. This corresponds to normal operation.
		PR030:	Accelerator pedal position	**X = 0%**	
		PR217:	Pedal load (gang no. 1)	**X = 0%**	
		PR218:	Pedal load (gang no. 2)	**X = 0%**	
		PR148:	Pedal potentiometer voltage gang 2	**X = 0.37 V ± 0.05**	
3	Brake pedal position	**ET122:**	Brake contact no. 1 signal	Brake pedal released **ABSENT**	Nonconformity of the brake signals and or the clutch switch signals can cause "engine racing" during gear changes.
		ET123:	Brake switch no. 2 signal	Brake pedal released **ABSENT**	
4	Clutch pedal position	**ET233:**	Clutch pedal	Clutch pedal released **RELEASED**	

GETtheMANUALS.org

NOTES	Only check conformity after a full check with the **diagnostic tool**. The values shown in this conformity check are given as examples. Execution conditions: **engine idling and warm, coolant temperature > 80˚C**.

CRUISE CONTROL/SPEED LIMITER

Order	Function	Parameter or Status Check or Action		Display and notes	Fault finding
1	Cruise control/ Speed limiter	**PR089:**	Vehicle speed	Gives the vehicle speed in mph. This parameter is transmitted by the ABS computer. This signal is transmitted to the injection on the multiplex network.	In the event of a fault, test the multiplex network. Check the ABS.
		PR130:	Cruise control setpoint	Indicates the cruise control cruising speed.	Cruise control can only be activated for a speed V > 18 mph (30 km/h).
		ET042:	Cruise control/ speed limiter	**INACTIVE:** when no button is pressed.	In the event of a fault, refer to the interpretation of status **ET042**.
				CRUISE CONTROL: cruise control ON/OFF button pressed	Lights the green warning light on the instrument panel.
				SPEED LIMITER: speed limiter ON/OFF button pressed	Lights the orange warning light on the instrument panel.
		ET413:	Cruise control/ speed limiter function	**INACTIVE:** when no button is pressed.	In the event of a fault, refer to the interpretation of statuses **ET042 Cruise control/Speed limiter, ET413 Cruise control/ Speed limiter function** and **ET415 Deactivation of Cruise control/Speed limiter**.
				INCREASE: increase button pressed	
				DECREASE: decrease button pressed	
				CANCEL: "0" button pressed	
				REPEAT: R button pressed	

GETtheMANUALS.org

NOTES	Only check conformity after a full check with the **diagnostic tool**. The values shown in this conformity check are given as examples. Execution conditions: **engine idling and warm, coolant temperature > 80˚C**.

CRUISE CONTROL/SPEED LIMITER (CONTINUED 1)

Order	Function	Parameter or Status Check or Action		Display and notes	Fault finding
1	Cruise control/ speed limiter (continued)	**ET415:**	Deactivation of cruise control/ speed limiter Note: Cruise control can only be activated for a speed V > 18 mph (30 km/h)	**INACTIVE:** when no button is pressed.	The cruise control and speed limiter functions can be deactivated by various events. **IMPORTANT** Certain deactivations are stored; to reinitialise this status use **RZ007 Fault memory** In the event of a fault, refer to the interpretation of statuses **ET042 Cruise control/Speed limiter, ET413 Cruise control/ Speed limiter function** and **ET415 Deactivation of Cruise control/ Speed limiter**.
				STATUS 1: vehicle speed not updated.	
				STATUS 2: vehicle speed invalid.	
				STATUS 3: cruise control or speed limiter fault.	
				STATUS 4: inconsistency between the request and the vehicle speed.	
				STATUS 5: fault detected by injection computer	
				STATUS 6: gear selector lever in neutral	
				STATUS 7: disconnection of engine/gearbox	
				STATUS 8: traction control request.	
				STATUS 9: brake pedal depressed.	
				STATUS 10: suspend button pressed	

GETtheMANUALS.org

NOTES	Only check conformity after a full check with the **diagnostic tool**. The values shown in this conformity check are given as examples. Execution conditions: **engine idling and warm, coolant temperature > 80˚C**.

CRUISE CONTROL/SPEED LIMITER (continued 2)

Order	Function	Parameter or Status Check or Action		Display and notes	Fault finding
2		**PR178:**	Cruise control switch voltage	**X = 4.9 V ± 0.2** switches in rest position X = **0.2 ± 0.2 V** **O** pressed X = **3.7 ± 0.2 V** **R** pressed X = **2.4 ± 0.2 V** if **+** pressed X = **1.3 ± 0.2 V** if **-** pressed	None.
3	Brake pedal position	**ET122:**	Brake contact no. 1 signal	Brake pedal released **ABSENT**	Nonconformity of the brake signals and or the clutch switch signals can cause "engine racing" during gear changes.
		ET123:	Brake switch no. 2 signal	Brake pedal released **ABSENT**	
4	Clutch pedal position	**ET233:**	Clutch pedal	Clutch pedal released **RELEASED**	

GETtheMANUALS.org

NOTES	Only check conformity after a full check with the **diagnostic tool**. The values shown in this conformity check are given as examples. Execution conditions: **engine idling and warm, coolant temperature > 80˚C**.

ENGINE COOLING

Order	Function	Parameter or Status Check or Action		Display and notes	Fault finding
1	Coolant temperature	**PR064:**	Coolant temperature	Shows the engine coolant temperature in ˚C	In the event of a fault, refer to the interpretation of **DF001 Coolant temperature sensor circuit**.
2	Fan assemblies	**ET143:**	Low speed fan assembly relay control	**Engine running > 80 ˚C INACTIVE**	If the fan assemblies are supplied with the ignition on, the injection system may be in defect mode. Carry out a system fault test and refer to the interpretation of any faults.
		ET144:	High-speed fan assembly relay control		
3	Sensor feed	**PR071:**	Computer feed voltage	**9 V < X < 16 V**	In the event of a fault, test the battery and carry out a fault finding procedure on the charging circuit.
		PR215:	Sensor supply voltage no. 1	**4.9 V < X < 5.1 V**	
		PR216:	Sensor supply voltage no. 2	**4.9 V < X < 5.1 V**	

GETtheMANUALS.org

NOTES	Only check conformity after a full check with the **diagnostic tool**. The values shown in this conformity check are given as examples. Execution conditions: **engine idling and warm, coolant temperature > 80˚C**.

IGNITION/PREHEATING

Order	Function	Parameter or Status Check or Action		Display and notes	Fault finding
1	Power supply	**ET001:**	Computer + after ignition feed	**PRESENT**	In the event of a fault, apply the interpretation of **DF046 Battery voltage** or **DF222 Main relay**.
2	Engine speed	**PR055:**	Engine speed	Gives the engine's rotational speed in rpm. **820 rpm ± 50**	In the event of a fault, refer to the interpretation of fault **DF195 Camshaft sensor/engine speed consistency**.
3	Temperature	**PR058:**	Air temperature	Shows the inlet air temperature	In the event of a fault, consult the interpretation of fault **DF002 Air temperature sensor circuit**.
		PR064:	Coolant temperature	Gives the coolant temperature in ˚C.	In the event of a fault, refer to the interpretation of **DF001 Coolant temperature sensor circuit**.
4	Preheating	**ET007:**	Preheating unit control	**INACTIVE**	In the event of a fault, (**ET007** locked in **ACTIVE**), refer to the interpretation of fault **DF017 Preheating unit control circuit**.
		ET120:	Pre-postheating signal	**ABSENT**	
5	Sensor feed	**PR071:**	Computer feed voltage	**9 V < X < 16 V**	In the event of a fault, test the battery and carry out a fault finding procedure on the charging circuit.

GETtheMANUALS.org

Tool status	Diagnostic tool title
ET001	+ After ignition computer feed
ET003	Engine immobiliser
ET004	Air conditioning authorisation
ET007	Pre-postheating control
ET010	Low pressure pump relay control
ET042	Cruise control/speed limiter
ET088	Compressor actuation request
ET104	Injector code use
ET120	Pre-postheating signal
ET122	Brake switch no. 1 signal
ET123	Brake switch no. 2 signal
ET143	Low speed motor-driven fan assembly relay control
ET144	High speed motor-driven fan assembly relay control
ET205	Thermoplunger no. 1 relay control
ET206	Thermoplunger no. 2 relay control
ET207	Thermoplunger no. 3 relay control
ET211	Swirl flap control
ET212	Damper valve control
ET233	Clutch pedal
ET238	Synchronisation
ET272	First EGR offset programming
ET341	Immobiliser code programmed
ET413	Cruise control/speed limiterfunction
ET415	Deactivation of cruise control/speed limiter

GETtheMANUALS.org

ET001	COMPUTER + AFTER IGNITION FEED

"ABSENT"	***NOTES***	**Ignition on**

If the vehicle ignition is not switched on, the status **ET001** should be **ABSENT**.
As soon as the ignition is switched on, the computer should be supplied with power. Status **ET001** becomes **PRESENT**.
If this status remains locked on **ABSENT**, follow the procedure below:
– Check the condition of fuse **FM6** (**10A**) in the engine fuse and relay box.
– Check the continuity and for the absence of interference resistance between:

Black connector of the engine fuse and relay box **track 28** → Connector B brown **track E3** of the injection computer

Check the connections and the condition of the brown connector B contacts on the injection computer.
Repair if necessary.
If the fault is still present, contact the Techline.

"PRESENT"	***NOTES***	**Ignition on.**

Normal operating condition.
The computer is correctly supplied after the ignition has been switched on.

AFTER REPAIR	Deal with any other faults. Clear the fault memory. Switch off the ignition and carry out a road test followed by a check with the diagnostic tool.

GETtheMANUALS.org

ET003	ENGINE IMMOBILISER

"ACTIVE"	Refer to the UCH fault finding procedure (**see 87B Passenger compartment connection unit**).
"INACTIVE"	Refer to the UCH fault finding procedure (**see 87B Passenger compartment connection unit**).

AFTER REPAIR	Deal with any other faults. Clear the fault memory. Switch off the ignition and carry out a road test followed by a check with the diagnostic tool.

GETtheMANUALS.org

ET004	AC AUTHORISED

"NO"	Status **ET004** should be **NO** when the climate control control button is not pressed. If this status remains **NO** despite the button being pressed, perform the following operations: Check **the continuity and absence of interference resistance** between: Injection computer grey connector **A**, **track G4** → Blue connector of the air conditioning control panel **track 5** If the fault is still present, refer to the fault finding note for climate control (**see 62B Climate control**).
"YES"	Status **ET004** is used to interpret a request for air conditioning. When the climate control button is pressed, status **ET004** changes to **YES**. If this does not happen, perform the following operations: Check the continuity and absence of interference resistance between: Injection computer grey connector **A**, **track G4** → Air conditioning control panel blue connector **track 5** If the fault is still present, refer to the fault finding note for climate control (**see 62B Climate control**).
NONE	If the vehicle is not fitted with air conditioning, status **ET004** will always remain **NONE**.

AFTER REPAIR	Deal with any other faults. Clear the fault memory. Switch off the ignition and carry out a road test followed by a check with the diagnostic tool.

GETtheMANUALS.org

ET007	PRE-POSTHEATING UNIT CONTROL

"ACTIVE"	When the ignition is switched on, status **ET007** should be **ACTIVE** for a time that varies according to the engine coolant temperature. Both the relay and the heater plugs are then supplied. After starting the status should remain **ACTIVE** for a variable period according to the engine coolant temperature. This is called postheating. If the vehicle starts, postheating is completed and status **ET007** remains **ACTIVE** during the engine operating phase, refer to the interpretation of faults **DF017 Preheating unit control circuit** and **DF186 Heater plugs circuit**.
"INACTIVE"	If the vehicle does not start or the status remains **INACTIVE** and preheating has not been carried out when switching on the ignition or during the starting phase, check the following connections: Injection computer **track B3 brown connector B** → **track 9** preheating unit Injection computer **track C3 brown connector B** → **Track 8** preheating unit Repair if necessary.

AFTER REPAIR	Deal with any other faults. Clear the fault memory. Switch off the ignition and carry out a road test followed by a check with the diagnostic tool.

GETtheMANUALS.org

ET010	LOW PRESSURE PUMP RELAY CONTROL

"ACTIVE"	Status **ET010** must be **ACTIVE** when the injection computer activates the fuel pump relay. When the ignition is switched on, status **ET010** must be **ACTIVE**.

"INACTIVE"	Status **ET010** must be **INACTIVE** when the injection computer does not actuate the fuel pump relay. If when the ignition is switched on, status **ET010** remains **INACTIVE**, check the continuity and absence of interference resistance between: Injection computer black connector **C**, **track A1** → Fuel pump relay mounting **track B2** If the fault is still present, consult the interpretation of fault **DF207 Low pressure pump relay circuit**.

AFTER REPAIR	Deal with any other faults. Clear the fault memory. Switch off the ignition and carry out a road test followed by a check with the diagnostic tool.

GETtheMANUALS.org

ET042	CRUISE CONTROL/SPEED LIMITER

LIMITER	Status **ET042** should display **LIMITING** when the Cruise control/Speed limiter button is set to the limiter position.
CRUISE CONTROL	Status **ET042** should display **CRUISE CONTROL** when the Cruise control/Speed limiter button is set to the cruise control position.

The Cruise control/Speed limiter button has 3 positions: speed limiter, cruise control and standby.

If the status is not working, apply the interpretation of fault **DF234 Cruise control/Speed limiter function**.

AFTER REPAIR	Deal with any other faults. Clear the fault memory. Switch off the ignition and carry out a road test followed by a check with the diagnostic tool.

GETtheMANUALS.org

ET088	REQUEST TO START COMPRESSOR

"YES"	The status **ET088** is used to interpret a request for air conditioning. If the air conditioning button is pressed, status **ET088** changes to **YES**. If this does not happen, perform the following operations: Check the continuity and absence of interference resistance between: Injection computer **connector A track D3** ⟶ **Track 5** of the blue connector of the air conditioning control panel If the fault is still present, refer to the note regarding air conditioning.
"NO"	Status **ET088** should be **NO** when the air conditioning control button is not pressed. If this status remains **NO** despite the button being pressed, perform the following operations: Check **the continuity and absence of interference resistance** between: Injection computer **connector A track D3** ⟶ **Track 5** of the blue connector of the air conditioning control panel If the fault is still present, refer to the note regarding air conditioning.
NONE	If the vehicle is not fitted with air conditioning, status **ET088** will always remain **WITHOUT**.

AFTER REPAIR	Deal with any other faults. Clear the fault memory. Switch off the ignition and carry out a road test followed by a check with the diagnostic tool.

GETtheMANUALS.org

ET104	INJECTOR CODE USE

"YES"	Status **ET104** should display **YES** when the injector codes have been entered.
"NO"	Status **ET104** should display **NO** when the injector codes have not been entered. In this case, the engine management computer uses prespecified values in its memory to control the injectors.

Check for any faults using the interpretation of fault **DF374 Computer**.

AFTER REPAIR	Deal with any other faults. Clear the fault memory. Switch off the ignition and carry out a road test followed by a check with the diagnostic tool.

GETtheMANUALS.org

ET120	PRE-POSTHEATING SIGNAL

NOTES	Check the battery voltage.

ABSENT	Status **ET120** is **ABSENT** as soon as pre/postheating has ended. If status **ET120** continuously remains **PRESENT**, refer to fault **DF017 Preheating unit control circuit**.
PRESENT	Status **ET120** is **PRESENT** until pre/postheating ends.

AFTER REPAIR	Deal with any other faults. Clear the fault memory. Switch off the ignition and carry out a road test followed by a check with the diagnostic tool.

GETtheMANUALS.org

ET122	BRAKE CONTACT SIGNAL No. 1

PRESENT

When the driver depresses the brake pedal, status **ET122 Brake contact signal no. 1** must change to **PRESENT** and status **ET123 Brake contact signal no. 2** must change to **PRESENT**.
If the driver depresses the brake pedal fully and status **ET122** remains **ABSENT**, check that the brake lights at the rear of the vehicle have come on.
Check the condition of the brake light switch contacts and connections.
If the brake lights are working, check the continuity and absence of interference resistance between:

connector A track F3, Engine management computer → **track 3** brake pedal switch connector

Repair if necessary.
If the brake lights are not working:
– Check the condition of the bulbs, replace if necessary.
– Check the condition of the fuse (15 A or 20 A) in the passenger compartment relay and fuse box.
– Check for **+ 12 V** after ignition on track 2 and 4 of the switch.
– Then remove the brake light switch and carry out the checks in the following table:

	Continuity between tracks	**Insulation between tracks**
Switch pressed (Brake pedal released)	**4 and 3**	**1 and 2**
Switch released (Brake pedal depressed)	**1 and 2**	**4 and 3**

If these checks are not in order, replace the brake light switch.

ABSENT

When the driver releases the brake pedal, the status **ET122** must change to **ABSENT** and status **ET123** must change to **ABSENT**.
If this is not the case, check the condition and proper functioning of the brake light switch by performing the checks for the **PRESENT** part.

AFTER REPAIR	Deal with any other faults. Clear the fault memory. Switch off the ignition and carry out a road test followed by a check with the diagnostic tool.

GETtheMANUALS.org

ET123	BRAKE CONTACT No. 2 SIGNAL

PRESENT

When the driver depresses the brake pedal, status **ET122 Brake contact signal no. 1** must change to **PRESENT** and status **ET123 Brake contact signal no. 2** must change to **PRESENT**.
If the driver depresses the brake pedal firmly and status **ET123** remains **ABSENT**, check the illumination of the brake lights at the rear of the vehicle.
Check the condition of the brake light switch contacts and connections.
If the brake lights are working, check the continuity and the absence of interference resistance between:

connector A track F3, Engine management computer ⟶ **track 3** brake pedal switch connector

Repair if necessary.
If the brake lights are not working:
– Check the condition of the bulbs, replace if necessary.
– Check the condition of the fuse (15 A or 20 A) in the passenger compartment relay and fuse box.
– Check for **+ 12 V** after ignition on track 2 and 4 of the switch.
– Then remove the brake light switch and carry out the checks in the following table:

	Continuity between tracks	**Insulation between tracks**
Switch pressed (Brake pedal released)	**4 and 3**	**1 and 2**
Switch released (Brake pedal depressed)	**1 and 2**	**4 and 3**

If these checks are not in order, replace the brake light switch.

ABSENT

When the driver depresses the brake pedal, status **ET122 Brake contact signal no. 1** must change to **ABSENT** and status **ET123 Brake contact signal no. 2** must change to **ABSENT**.
If this is not the case, check the condition and correct operation of the brake light switch by carrying out the checks associated with **PRESENT** in the interpretation of **ET122**.

Note:
Status **ET122 Brake contact signal no. 1** must change to **ABSENT** if status **ET123 Brake contact signal no. 2** is **ABSENT**, these statuses are directly linked.
If this is not the case, carry out the above fault finding procedure.

AFTER REPAIR	Deal with any other faults. Clear the fault memory. Switch off the ignition and carry out a road test followed by a check with the diagnostic tool.

GETtheMANUALS.org

ET143	LOW-SPEED FAN ASSEMBLY RELAY CONTROL

NOTES	If the vehicle is fitted with air conditioning, the fan assembly electrical circuit includes **2 relays**. The low speed fan assembly relay will be run when the engine coolant temperature exceeds **99˚C** and will cool the engine as long as the engine coolant temperature does not exceed **102˚C**. If the temperature of the engine coolant exceeds **102˚C**, the high speed fan assembly relay will be run and the engine cooling fan will turn more quickly.

WARNING
If the vehicle is equipped with air conditioning, the engine cooling fan will run at low speed as soon as the computer actuates the air conditioning compressor.

"ACTIVE"	When the coolant reaches **99˚C**, the injection computer actuates the low speed fan assembly relay, and status **ET143** becomes **ACTIVE**. The relay then supplies the fan assembly and the cooling fan switches on. If status **ET143** is **ACTIVE**, but the cooling fan is not running, perform the following operations: – Check the condition of fuse **F2** (30 A) in the engine relay/fuse box. – Next, check for continuity and the absence of interference resistance between: Low-speed relay mounting **track 9** → **track 1** of the fan assembly resistor connector **track 2** of the cooling fan assembly resistance connector → **track 2** of the engine cooling fan black 2 track connector

AFTER REPAIR	Deal with any other faults. Clear the fault memory. Switch off the ignition and carry out a road test followed by a check with the diagnostic tool.

GETtheMANUALS.org

ET143 **CONTINUED**	

"ACTIVE"	– Disconnect the low-speed and high-speed relays, check their operation and the condition of the connections. – Repair if necessary. – Check for **+ 12 V** on terminal 12 of the low-speed relay mounting while it is active. – Disconnect the black 2-track connector of the engine cooling fan and check the condition of the connections. – Repair if necessary. – Next, check **the continuity and absence of interference resistance** between: Injection computer connector **C track A2** → **track 11** of the fan assembly relay mounting **track 9** relay mounting → **track 1** of the fan assembly resistor connector **vehicle** earth → **track 1** of the 2-track black connector for the engine cooling fan
"INACTIVE"	If the engine temperature is lower than **99˚C**, the engine cooling fan must not switch on and the low speed fan assembly relay must not be run. Status **ET143** must therefore be **INACTIVE** when the control relay and the engine cooling fan are not supplied.

AFTER REPAIR	Deal with any other faults. Clear the fault memory. Switch off the ignition and carry out a road test followed by a check with the diagnostic tool.

GETtheMANUALS.org

ET144	HIGH-SPEED FAN ASSEMBLY RELAY CONTROL

NOTES	If the vehicle is not fitted with air conditioning, there is no low-speed fan assembly relay. The circuit therefore only contains a single control relay to supply the engine cooling fan. The engine cooling fan will thus have only one operating speed.

Vehicle without air conditioning

"ACTIVE"	When the coolant reaches **102˚C**, the injection computer actuates the fan assembly relay, and status **ET144** becomes **ACTIVE**. The relay then supplies the cooling fan. If status **ET144** is **ACTIVE**, but the cooling fan is not running, perform the following operations: – Disconnect the fan assembly relay, check it is operating properly, and the condition of the connections. – Repair if necessary. – Check for **+ 12 V** on terminal 8 of the relay mounting while it is active. – Next, check **the continuity and absence of interference resistance** between: Injection computer **connector A track B4** → **track 7** of the fan assembly relay mounting **track 5** relay mounting → **track 2** of the engine cooling fan black 2 track connector **vehicle** earth → **track 1** of the 2-track black connector for the engine cooling fan
"INACTIVE"	When the cooling request is no longer executed by the injection computer, status **ET144** becomes **INACTIVE**. The fan assembly should then switch off.

AFTER REPAIR	Deal with any other faults. Clear the fault memory. Switch off the ignition and carry out a road test followed by a check with the diagnostic tool.

GETtheMANUALS.org

ET144 **CONTINUED**	

Vehicle with air conditioning

"ACTIVE"	When the coolant reaches a temperature of **102 ˚C**, the injection computer commands the high speed relay, and status **ET144** becomes **ACTIVE**. The relay then supplies the cooling fan and this begins to turn. If status **ET144** is **ACTIVE**, but the cooling fan is not running, perform the following operations: Check the conformity of the fuses concerned (crimping and condition of the wires on the terminals): – Check for **+ 12 V** after ignition feed on terminal 1 or 8 of the high speed fan assembly relay mounting (**depending on the engine**). – Next, check **for continuity and the absence of interference resistance between**: Computer supply voltage relay mounting **track 13** → **track 6** of the high speed fan assembly relay mounting – Disconnect the high-speed fan assembly relay, check it is operating properly, and the condition of the connections. – Repair if necessary. – Next, check **for continuity and the absence of interference resistance between**: Injection computer **connector A track B4** → **Track 7** of the high speed fan assembly relay mounting relay mounting **track 5** → **track 2** of the engine cooling fan black 2 track connector **vehicle** earth → **track 1** of the 2-track black connector for the engine cooling fan
"INACTIVE"	When the cooling request is no longer executed by the injection computer, status **ET144** becomes **INACTIVE**. The engine cooling fan should then switch off.

AFTER REPAIR	Deal with any other faults. Clear the fault memory. Switch off the ignition and carry out a road test followed by a check with the diagnostic tool.

GETtheMANUALS.org

ET205	THERMOPLUNGER No.1 RELAY CONTROL

NOTES	Check the battery voltage.

"ACTIVE"	Status **ET205** displays **ACTIVE** when the computer controls thermoplunger no.1 relay. Refer to command **AC063 Thermoplunger no. 1 relay**.
"INACTIVE"	Status **ET205** displays **INACTIVE** when the thermoplunger no. 1 relay is not controlled. Refer to command **AC063 Thermoplunger no. 1 relay**.

AFTER REPAIR	Deal with any other faults. Clear the fault memory. Switch off the ignition and carry out a road test followed by a check with the diagnostic tool.

GETtheMANUALS.org

ET206	THERMOPLUNGER No.2 RELAY CONTROL

NOTES	Check the battery voltage.

"ACTIVE"	Status **ET206** displays **ACTIVE** when the computer controls thermoplunger no.2 relay. Refer to command **AC064 Thermoplunger no. 2 relay**.
"INACTIVE"	Status **ET206** displays **INACTIVE** when the thermoplunger no. 2 relay is not controlled. Refer to command **AC064 Thermoplunger no. 2 relay**.

AFTER REPAIR	Deal with any other faults. Clear the fault memory. Switch off the ignition and carry out a road test followed by a check with the diagnostic tool.

GETtheMANUALS.org

ET207	THERMOPLUNGER No. 3 RELAY CONTROL

NOTES	Check the battery voltage.

"ACTIVE"	Status **ET207** displays **ACTIVE** when the computer controls thermoplunger no.3 relay. Refer to command **AC031 Thermoplunger no. 3 relay**.
"INACTIVE"	Status **ET207** displays **INACTIVE** when the thermoplunger no. 3 relay is not controlled. Refer to command **AC031 Thermoplunger no. 3 relay**.

AFTER REPAIR	Deal with any other faults. Clear the fault memory. Switch off the ignition and carry out a road test followed by a check with the diagnostic tool.

GETtheMANUALS.org

ET211	SWIRL FLAP CONTROL

NOTES	Check the battery voltage. Ignition on and engine stopped.

"ACTIVE"	Status **ET211** displays **ACTIVE** when the computer controls the swirl flap. Refer to command **AC013 Swirl flap**.
"INACTIVE"	Status **ET211** displays **INACTIVE** when the swirl flap is not controlled. Refer to command **AC013 Swirl flap**.

AFTER REPAIR	Deal with any other faults. Clear the fault memory. Switch off the ignition and carry out a road test followed by a check with the diagnostic tool.

GETtheMANUALS.org

ET212	DAMPER VALVE CONTROL

NOTES	Check the battery voltage.

"ACTIVE"	Status **ET212** displays **ACTIVE** when the computer controls the damper valve. Refer to command **AC067 Damper valve**.
"INACTIVE"	Status **ET212** displays **INACTIVE** when the damper valve is not controlled. Refer to command **AC067 Damper valve**.

AFTER REPAIR	Deal with any other faults. Clear the fault memory. Switch off the ignition and carry out a road test followed by a check with the diagnostic tool.

GETtheMANUALS.org

ET233	CLUTCH PEDAL

DEPRESSED	When the driver presses the clutch pedal, status **ET233 Clutch pedal** displays **DEPRESSED**.

RELEASED	When the driver is not pressing the clutch pedal, status **ET233 Clutch pedal** displays **RELEASED**. If **RELEASED** appears despite an action on the clutch pedal, perform the following operations: – Disconnect the clutch pedal switch, check the insulation between **tracks 1 and 2** in the pedal released position. – Repeat this operation with the pedal depressed, and check the continuity between the 2 tracks. If these 2 checks are not in order, replace the switch. Next, check for continuity and the absence of interference resistance between: **track 1** clutch pedal switch connector → **track E2** of grey **connector A** of the injection computer **track 2** of the clutch pedal switch → vehicle earth Also check: The condition of the contacts of the blue pedal/dashboard connectors on **track 1** and **2**. The condition of the contacts of the black engine/dashboard connectors in **track 4**

NONE	When the vehicle is fitted with an automatic transmission or a sequential gearbox, status **ET233 Clutch pedal** displays **NONE**.

AFTER REPAIR	Deal with any other faults. Clear the fault memory. Switch off the ignition and carry out a road test followed by a check with the diagnostic tool.

GETtheMANUALS.org

ET238	SYNCHRONISATION

Synchronisation is carried out during the engine starting phase. It is established between the camshaft position sensor and the TDC sensor. This synchronisation, once performed, allows the computer to identify cylinder no. 1, and to recognise the exact position of the top dead centre of this cylinder.
Synchronisation also allows the computer to determine the injection programming.

STANDBY	Status **ET238** is **STANDBY** when the engine is stopped with + after ignition feed.
IN PROGRESS	Status **ET238** is **IN PROGRESS** when the engine is in the starting phase. When the computer is synchronising, it receives and interprets signals from the camshaft and crankshaft position sensors. If status **ET238** remains **IN PROGRESS** after an attempt at starting, refer to the interpretation of fault **DF195 Camshaft/engine speed consistency**.
PERFORMED	Status **ET238** is **DONE** when the engine is started. The computer has identified the cylinder no. 1 and has identified the exact top dead centre position. Injection phasing is now possible, and the engine should be working properly.

AFTER REPAIR	Deal with any other faults. Clear the fault memory. Switch off the ignition and carry out a road test followed by a check with the diagnostic tool.

GETtheMANUALS.org

ET272	FIRST EGR OFFSET PROGRAMMING

NOTES	Check the battery voltage.

PERFORMED	Status **ET272** displays **COMPLETED** when the computer has reinitialised the EGR valve after being replaced and the power-latch* phase.
NOT COMPLETED	Status **ET272** displays **NOT COMPLETED** when the computer has not yet reinitialised the position of the EGR valve after the valve replacement and command **RZ002 EGR adaptives**.

* The immobiliser warning light will flash a few seconds after switching the ignition off.

AFTER REPAIR	Deal with any other faults. Clear the fault memory. Switch off the ignition and carry out a road test followed by a check with the diagnostic tool.

GETtheMANUALS.org

ET341	IMMOBILISER CODE PROGRAMMED

"YES"	Status **ET341** is **YES** if dialogue is possible between the UCH computer and the injection computer and the key code is recognised. The engine is only authorised to start if the code is recognised by the UCH computer and if status **ET003 Immobiliser** is **INACTIVE**.
"NO"	Status **ET341** is **NO** if dialogue is not possible between the UCH computer and the injection computer (status **ET003 Immobiliser** remains **ACTIVE**). This fault may be caused by incorrect key programming or key programming not having been performed. In that case, refer to the fault finding note for the UCH and follow the key programming procedure. If the key programming is not the cause, test the multiplex network and check that the dialogue between the UCH and the injection computer is possible. If dialogue is not established, contact the Techline.

AFTER REPAIR	Deal with any other faults. Clear the fault memory. Switch off the ignition and carry out a road test followed by a check with the diagnostic tool.

GETtheMANUALS.org

ET413	CRUISE CONTROL/SPEED LIMITER FUNCTION

NOTES	Cruise control remains deactivated as long as the vehicle does not exceed a vehicle speed **>18 mph (30 km/h)**.

"PLUS"	Status **ET413** displays **INCREASE** when the driver presses **+** located on the steering wheel spoke.
"MINUS"	Status **ET413** displays **DECREASE** when the driver presses **-** located on the steering wheel spoke.
"SUSPEND"	Status **ET413** displays **CANCEL** when the driver presses the cruise control or speed limiter stop switch.
"REACTIVATE"	Status **ET413** displays **RESUME** when the driver presses the cruise control or speed limiter resume switch.

AFTER REPAIR	Deal with any other faults. Clear the fault memory. Switch off the ignition and carry out a road test followed by a check with the diagnostic tool.

GETtheMANUALS.org

ET415	CRUISE CONTROL/SPEED LIMITER DEACTIVATION

NOTES	Status **ET415 Cruise control/Speed limiter deactivation** is directly linked to status **ET413 Cruise control/Speed limiter function** and status **ET042 Cruise control/ Speed limiter** Cruise control remains deactivated as long as the vehicle does not exceed a speed **>18 mph (30 km/h)**.

NONE	**The vehicle diagnosed is not fitted with cruise control.**
STATUS 1	**VEHICLE SPEED NOT REFRESHED**
	If the ABS computer stops sending a signal to the injection computer, the vehicle speed will be unknown. The cruise control will therefore be inactive and status **ET415** will remain **STATUS 1**.
STATUS 2	**INVALID VEHICLE SPEED**
	As long as the vehicle has not exceeded a speed of >18 mph (30 km/h), status **ET415** remains **STATUS 2**.
STATUS 3	**CRUISE CONTROL OR SPEED LIMITER FAULT**
	As soon as the cruise control or speed limiter suffers an electrical fault, the injection computer switches status **ET415** to **STATUS 3**.
STATUS 4	**INCONSISTENCY BETWEEN REQUEST AND VEHICLE SPEED**
	When the speed requested by the driver does not match the actual speed of the vehicle, the injection computer switches status **ET415** to **STATUS 4**.

AFTER REPAIR	Deal with any other faults. Clear the fault memory. Switch off the ignition and carry out a road test followed by a check with the diagnostic tool.

GETtheMANUALS.org

ET415 **CONTINUED 1**	

STATUS 5	**FAULT DETECTED BY THE INJECTION COMPUTER**

As soon as a fault is detected by the injection computer, status **ET415** changes to **STATUS 5**.
- Faults on the accelerator pedal.
- Faults in the engine speed sensor or camshaft.
- Engine speed above 4700 rpm.
- Engine speed less than 1000 rpm.
- Carry out a multiplex network test, then an injection system test, and carry out fault finding on any faults.

If the fault is still present, contact the Techline.

STATUS 6	**GEAR LEVER IN NEUTRAL POSITION**

When the gear lever in neutral signal is registered by the injection computer, it changes status **ET415** to **STATUS 6**.

STATUS 7	**DISCONNECTION OF THE ENGINE/GEARBOX**

When the driver presses the clutch pedal, the injection computer switches status **ET415** to **STATUS 7**.

STATUS 8	**TRACTION CONTROL REQUEST**

When the ABS or ESP computer requests traction control, status **ET415** becomes **STATUS 8**.

AFTER REPAIR	Deal with any other faults. Clear the fault memory. Switch off the ignition and carry out a road test followed by a check with the diagnostic tool.

GETtheMANUALS.org

ET415 **CONTINUED 2**	

STATUS 9	**BRAKE PEDAL DEPRESSED**
	As soon as the driver presses the brake pedal, the braking request is made and is sent via the ABS system computer. This signal deactivates the cruise control and status **ET415** becomes **STATUS 9**.
STATUS 10	**SUSPEND BUTTON PRESSED**
	When the driver presses the cruise control OFF switch, the injection computer changes status **ET415** to **STATUS 10**.

AFTER REPAIR	Deal with any other faults. Clear the fault memory. Switch off the ignition and carry out a road test followed by a check with the diagnostic tool.

GETtheMANUALS.org

Tool parameter	Diagnostic tool title
PR008	Rail reference pressure
PR009	Turbocharging pressure setpoint
PR014	Idle speed correction
PR017	Fuel flow
PR022	EGR valve position feedback loop difference
PR030	Accelerator pedal position
PR035	Atmospheric pressure
PR038	Rail pressure
PR041	Turbocharging pressure
PR047	Turbocharging pressure OCR
PR048	Rail pressure regulation valve OCR
PR051	EGR valve position feedback
PR055	Engine speed
PR058	Air temperature
PR063	Fuel temperature
PR064	Coolant temperature
PR071	Computer feed voltage
PR073	Air flowmeter feed voltage
PR089	Vehicle speed
PR128	First EGR valve offset
PR129	Last EGR valve offset
PR130	Cruise control setpoint
PR132	Air flow
PR147	Pedal potentiometer voltage gang 1
PR148	Pedal potentiometer voltage gang 2
PR178	Cruise control switch voltage
PR190	Engine idle speed setpoint.

GETtheMANUALS.org

Tool parameter	Diagnostic tool title
PR203	Fuel flow setpoint at idle speed
PR209	Turbocharging pressure loop difference
PR213	Rail pressure loop difference
PR214	Air flow loop difference
PR215	Sensor supply voltage no. 1
PR216	Sensor supply voltage no. 2
PR217	Pedal load (gang 1)
PR218	Pedal load (gang 2)
PR220	EGR valve OCR
PR302	Regulated fuel flow
PR364	Cylinder no. 1 fuel flow correction
PR365	Cylinder no. 4 fuel flow correction
PR405	Cylinder no. 2 fuel flow correction
PR406	Cylinder no. 3 fuel flow correction

GETtheMANUALS.org

PR038	RAIL PRESSURE

NOTES	**There must be no present or stored faults**. Perform this fault finding procedure: – after an inconsistency appears on the parameter menu or, – following the execution of command **AC035 Fuel pressure solenoid valve** – after a customer complaint (starting faults, poor performance, stalling etc.).

ELECTRICAL CONFORMITY OF THE SENSOR:

Check for **continuity and absence of interference resistance** on the following connections:

Engine computer, **connector B track D1** → **track 2** rail pressure sensor connector

Engine computer, **connector B track H2** → **track 3** rail pressure sensor connector

Engine computer, **connector C track B3** → **track 1** of the rail pressure sensor connector

If all these connections are correct, check for a fuel pressure sensor supply:

+ 5 V → **track 3** of the rail pressure sensor connector

Earth → **track 1** of the rail pressure sensor connector

Check the low and high pressure diesel circuit sealing (visual checks, odours): on pump body, pressure release valve, pipes, rail and injector unions, injector wells, etc.
If all the above checks are correct:

– With the vehicle ignition on, and engine stopped for over **1 minute**:
  – Display **PR038**: if the value is **less** than **30 bar**, the sensor is correct.
  – if not replace the rail pressure sensor.

AFTER REPAIR	Repeat the conformity check from the start.

GETtheMANUALS.org

PR041	TURBOCHARGING PRESSURE

NOTES	Perform this fault finding procedure: – after an inconsistency appears on the parameter menu or, – following fault **DF199 Turbocharging pressure sensor** or, – after a customer complaint (lack of performance, smoke, etc.).

With the vehicle ignition on and engine stopped:
– Remove the turbocharger pressure sensor.
– Sensor connected to the harness, not the value of **PR041**:
– If the value is not very close to **PR035 Atmospheric pressure**, maximum pressure difference between **PR035** and **PR041 Turbocharging pressure**, with the engine stopped, = **(± 50 hPa) ± 50 mbar**:
Check **the insulation and absence of interference resistance** on the signal line and the turbocharging pressure sensor power supply lines.
If the lines are correct, replace the turbocharging pressure sensor.
– Connect **a vacuum pump** or **pressure pump** to the turbocharger pressure sensor.
– Apply a pressure between **0.1** and **1.3 bar** (maximum pressure to be applied: **1300 hPa** or **1.3 bar**).
– Compare the pressure value displayed in the Parameter screen with that given by your vacuum pump:
If the difference* = **± 100 hPa** (or **± 0.1 bar)**, replace the turbocharging pressure sensor.
If there is no discrepancy, the turbocharging pressure sensor is correct.
– Refit the sensor and its seal, then apply the interpretation of the command **AC004 Turbocharging solenoid valve**.
*Note:
The diagnostic tool displays the **absolute pressure**, the pressure gauge for your vacuum pump displays the ***relative pressure***: the standard difference between these two measures is equal to atmospheric pressure, that is, **the value of PR035 Atmospheric pressure**.

AFTER REPAIR	Repeat the conformity check from the start.

GETtheMANUALS.org

PR132	AIR FLOW

NOTES	**There must be no faults present.** Perform this fault finding procedure: – following detection of an inconsistency in the parameters menu, – or after a customer complaint (lack of power, smoke, etc.).

Check the air inlet circuit (from the air filter inlet to the inlet manifold tracts, run **test 4: Turbocharged air inlet circuit check**):
– air filter unit inlet not blocked and filter not clogged,
– **no** foreign bodies in the air flow sensor grille (**visual inspection only, apply test 5: Air flow sensor**),
– otherwise replace the flowmeter, check and clean the air filter,
– oil vapour recirculation circuit connected correctly,
– **no leaks** or **blockages** in the **low** and **high-pressure** air circuits: pipes, presence and tightness of the mounting clips, mounting of the turbocharger pressure sensor, intercooler, etc.
– check that the damper valve is open (**flap control rests on the body** of the air vent casing),
– check that the turbulence flap is in the rest position (**AC013 Turbulence flap**, step B), if fitted to the vehicle.
Carry out the necessary repairs.
Check the **electrical conformity of the air flow sensor feed**:

power circuit:**+ 12 V** → **track 4** and battery **earth** → **track 6**

sensor circuit: **+ 5 V** → **track 3** and computer **earth** → **track 2**

Check for **continuity, insulation and absence of interference resistance** on the connection between:

Engine management computer, **connector B** track H4 → **track 5** of the flow sensor connector

With the flow sensor **connected**, the vehicle **ignition on** and **engine stopped**:
– check the voltage between **tracks 2** and **5** of the flow sensor,
– If the value is not **0.6 V ± 0.1**, replace the flow sensor.
Check the exhaust gas recirculation valve operation:
Apply **test 9 Exhaust gas recirculation valve**, part A.

AFTER REPAIR	Repeat the conformity check from the start.

GETtheMANUALS.org

SUMMARY OF AVAILABLE COMMANDS

NOTES	The commands are run to check the correct operation of certain components or to replace parts.

Tool command	Diagnostic tool title
SC001	Write saved data
SC002	Enter injector codes
SC003	Save computer data
RZ002	EGR programming adaptives
RZ003	Engine adaptives
RZ007	Fault memory
AC004	Turbocharging solenoid valve
AC013	Swirl flap
AC031	Thermoplunger No. 3 relay
AC034	Low-pressure pump relay
AC035	Fuel pressure solenoid valve
AC036	EGR valve
AC037	Preheating relay
AC038	Low speed fan assembly relay
AC039	High speed fan assembly relay
AC063	Thermoplunger no. 1 relay
AC064	Thermoplunger no. 2 relay
AC067	Damper valve
VP007	Decrease idling speed
VP010	Write VIN
VP011	Increase idling speed

GETtheMANUALS.org

SC001	WRITE SAVED DATA

NOTES	To use this command, first save the data with the **SC003 Save computer data** command. Writing is carried out after the computer has been reprogrammed or replaced.

Select scenario **SC001 Write saved data** in the diagnostic tool.
Validating this command writes the data saved using command **SC003 Save computer data**.
The data is as follows:

- Vehicle-specific idling.
- Options available on the vehicle and generated by the computer (e.g.: air conditioning).
- Fast idle speed if Commercial Vehicle.

They will configure the computer and will enable it to avoid:

- engine malfunction after reprogramming or replacing the computer,
- faulty interpretation of information provided by the CLIP tool.

AFTER REPAIR	Deal with any other faults. Clear the fault memory. Switch off the ignition and carry out a road test followed by a check with the diagnostic tool.

GETtheMANUALS.org

SC002	ENTER INJECTOR CODES

NOTES	This command is carried out after the replacement of one or more injectors.

To enter this data, select command **SC002 Enter injector codes** on the fault finding tool.
Procedure to be followed:
– Make a note of the 6-character alphanumeric codes engraved on the upper section of the injector bodies.
– Enter each injector code for the associated cylinder.
– Confirm the change of injector code configuration.
– When the command is completed, the modified codes appear in the current column.
– Check that the codes correspond to those read earlier.
If the codes entered appear in neither the current column nor the desired column, check the codes read and make sure the data has been entered correctly.
– Exit fault finding mode.
– Switch off the ignition and **wait for the end of the power latch***.
– Switch the ignition back on and check for faults.
– The **DF276 Injector code programming** should be stored.
If the **DF276** fault is still present, the command has not been executed correctly.
Start the procedure again and follow the instructions.
If this is still not effective, follow the procedure below:
A fault could cause **DF276** to be raised again and also incorrect confirmation of command **SC002**.
If the power latch* is not performed after the ignition is switched off, the injection computer will not store the new injector codes.
This can occur if the electrical wiring has been altered: alarm or accessories fitted to the vehicle.
Then check if the power latch* was executed correctly:
Switch off the ignition and check that the immobiliser warning light flashes **2 seconds** after switching the ignition off.
If the warning light flashes as soon as the ignition is switched off, the power latch* has not been executed and the command will not have been recognised.
If all these checks still do not enable the command to be confirmed, contact the Techline.

* The immobiliser warning light will flash a few seconds after switching the ignition off.

AFTER REPAIR	Deal with any other faults. Clear the fault memory. Switch off the ignition and carry out a road test followed by a check with the diagnostic tool.

GETtheMANUALS.org

SC003	SAVE COMPUTER DATA

NOTES	This save is performed before reprogramming or replacing the computer.

Select scenario **SC003 Save computer data** in the diagnostic tool.
Confirming this command saves the following vehicle-specific data:
- Vehicle-specific idling.
- Computer managed options available on the vehicle (e.g. air conditioning).
- Fast idle speed if Commercial Vehicle.

This information will be saved in the diagnostic tool.
Once the save is completed, use the **SC001 "Write saved data"** command to reparameterise the computer.

AFTER REPAIR	Deal with any other faults. Clear the fault memory. Switch off the ignition and carry out a road test followed by a check with the diagnostic tool.

GETtheMANUALS.org

RZ002	EGR ADAPTIVES

NOTES	This command is only executed after the exhaust gas recirculation valve has been replaced. Deal with all faults which do not involve the exhaust gas recirculation valve before programming the valve.

After having replaced the exhaust gas recirculation valve, erase the offsets in the memory so that the programming works with the offset value of the new valve.
Procedure to be followed after replacing the exhaust gas recirculation valve:
– Switch on the ignition.
– Connect the diagnostic tool and select the **Clear tab, RZ002 EGR adaptives**.
– Activate the **RZ002** command.
Once the command has finished, check the following parameters and statuses:
– **ET272 Programming first EGR offset:** not performed
– **PR128 EGR valve first offset** = 0.00 V
– **PR129 Last EGR valve offset** = 0.00 V
– **PR051 EGR valve position feedback** = 0.75 V < X < 1.5 V
– Exit fault finding mode and switch off the ignition.
– Then wait for the immobiliser warning light on the instrument panel to flash.
– You must then switch the ignition back on to initialise the new exhaust gas recirculation valve.
– When initialisation is complete, the EGR valve programming function displays:
ET272: Performed
0.75 V < PR128 = PR129 = PR051 < 1.5 V

AFTER REPAIR	Deal with any other faults. Clear the fault memory. Switch off the ignition and carry out a road test followed by a check with the diagnostic tool.

GETtheMANUALS.org

AC004	TURBOCHARGING SOLENOID VALVE

NOTES	Perform this fault finding procedure: – following interpretation of an unresolved fault, or – after using the interpretation of **PR041 Turbocharging pressure** and/or following a customer complaint (lack of power, smoke, etc.).

The following procedure is for checking that the turbocharger and its control circuit are working properly.

Preliminary operation

Check the seal of the high pressure air circuit: run **test 4 Turbocharged air inlet circuit check**.
Pipe not joined or pierced, pressure sensor disconnected or poorly fitted (seal present), exchanger pierced.
To test the intercooler: stabilise the engine speed between **3500 and 4000 rpm** with the vehicle stopped and check that there are no leaks.

Measure the turbocharging pressure regulator resistance between **tracks 1 and 2**. Replace the regulator if its resistance is not:

- **15.4 Ω ± 0.7 at + 20˚C** for a ***PIERBURG*** solenoid valve
- **16.5 Ω ± 1.6 at + 25˚C** for a ***BITRON*** solenoid valve

Check for **continuity and for the absence of interference resistance** on the following connections:

Engine computer, **connector B track L2** → **track 1** of the turbocharging pressure regulator

+ 12 V after relay → **track 2** of the turbocharging pressure regulator

Turbocharger control circuit check

On **F9Q** engines, steps **1, 2, and 3** can be replaced by a visual inspection:
With the engine stopped, make sure that the control rod is in the resting position.
Start the engine and check that the control shaft moves to its upper stop (when the engine is stopped, the control shaft should return to its rest position).

1) Vacuum pressure control check:
Disconnect the solenoid valve inlet **hose** and connect it to a pressure gauge.
Start the engine and run it at a stable idle speed.
If the vacuum pressure does not reach **800 mbar ± 100**: check the vacuum pressure circuit from the vacuum pump.
Stop the engine, reconnect the inlet hoses and go to step **2 Solenoid valve control check**.

AFTER REPAIR	Deal with any other faults. Clear the fault memory. Switch off the ignition and carry out a road test followed by a check with the diagnostic tool.

GETtheMANUALS.org

AC004 **CONTINUED 1**	

Turbocharger control circuit check (continued 1)
2) Solenoid valve control check:
Disconnect the solenoid valve outlet **hose**.
a) with a **PIERBURG** solenoid valve, start the engine and let it stabilise at idle speed.
Place your hand on the solenoid valve and block the outlet **union** with your thumb.
If you notice no solenoid valve vibration, go to **step 5 Computer output stage check, with the solenoid valve connected**)
b) with a **BITRON** solenoid valve, put a cap on the outlet **union**,
Connect a vacuum pump to the inlet **union** and apply a vacuum.
If the vacuum pressure is **maintained**, replace the solenoid valve
If not, reconnect the inlet **hoses**, remove the cap and fit the pressure gauge on the outlet **union**.
Start the engine:
If no vacuum pressure is measured, go to step **no. 5 Computer output stage check, with solenoid valve connected**.
3) Solenoid valve operation check:
Connect the pressure gauge to the solenoid valve outlet **union**.
Start the engine and run it at a stable idle speed.
G9T and G9U engines: if the vacuum does not reach **475 mbar ± 75**, replace the solenoid valve.
Engine F9Q: if the vacuum pressure does not reach **800 mbar ± 100**, replace the solenoid valve,
4) Check the operation of the turbocharger:
Engine stopped:
a) Connect a vacuum pump to the **hose** situated between the solenoid valve and the control diaphragm of the turbocharger.
Apply a vacuum pressure of **800 mbar ± 100:**
If there is a leak, replace the turbocharger (diaphragm cannot be separated from the turbocharger).
b) Check the travel and position of the control rod: run **test 6 Control of a fixed geometry turbocharger by vacuum** for a fixed geometry turbocharger, **test 7 Control of a variable geometry turbocharger** for a variable geometry turbocharger then **test 8 Rotating section of a turbocharger** in both cases.
c) Engine cold and stopped:
Remove the turbocharger air inlet duct and make sure that the compressor is turning freely on its axle.
d) If the fault is still present:
Check that the exhaust manifold is not leaking.
Check that the exhaust is not blocked: run **test 1 Exhaust pipe check**.
Carry out the necessary repairs.

AFTER REPAIR	Deal with any other faults. Clear the fault memory. Switch off the ignition and carry out a road test followed by a check with the diagnostic tool.

GETtheMANUALS.org

AC004 **CONTINUED 2**	

Turbocharger control circuit check (continued 2)
5) Check the output stage of the computer with the solenoid valve connected:
This operation **can only be carried out if** the checks indicated in **step no. 2** are **not conclusive**.
Vehicle with + after ignition, clear the faults displayed by the diagnostic tool.
Using a voltmeter:
Connect the voltmeter earth to **track 2** of the solenoid valve and the positive cable to **track 1**.
Activate the **AC004 Turbocharging solenoid valve** command:

➡ The voltmeter should display **ten cycles** of two successive voltages approximately equal to the product of the battery voltage and the Opening Cyclic Ratio in progress, that is: **~ 2.5 V** for an Opening Cyclic Ratio of **20 %**, then **~ 8.7 V** for an Opening Cyclic Ratio of **70 %**.

Either by oscilloscope (calibrated at **5 V/div** and time base of **1 ms/div)**:
Connect the oscilloscope earth lead to the battery earth and the positive test pin to **track 1** of the solenoid valve.
Activate the **AC004 Turbocharging solenoid valve** command:

➡ The oscilloscope should display a square wave signal of **12.5 V** at a frequency of **140 Hz** (with an Opening Cyclic Ratio passing successively from ~ 20 to ~ 70 %)

If the measurement is correct, replace the solenoid valve.
If the measurement does not show any control or continuous voltage, contact the Techline.

AFTER REPAIR	Deal with any other faults. Clear the fault memory. Switch off the ignition and carry out a road test followed by a check with the diagnostic tool.

GETtheMANUALS.org

AC013	SWIRL FLAP

NOTES	Carry out this interpretation: – following **DF227 Turbulence flap (1.DEF)**, – or after a customer complaint (lack of performance).

Measure the **resistance** of the swirl flap solenoid valve between **tracks 1** and **2**.
Replace the solenoid valve if its resistance is not **46 Ω ± 3 at + 20˚C**.
Check for **continuity and for the absence of interference resistance** on the following connections:

Engine management computer, **connector C track H4** → **track 1** of the solenoid valve connector.

+ 12 V after relay (injection) → **track 2** solenoid valve connector.

A) Engine running at idle speed:
Check there is a vacuum pressure of **~ 900 mbar** in the solenoid valve inlet hose.
Make the necessary repairs (vacuum pressure circuit conformity and seal).
B) With the ignition on and engine switched off: check the solenoid valve for leaks.
Disconnect the solenoid valve inlet and outlet hoses,
Connect a vacuum pump to the inlet union and apply a vacuum pressure of **~ 900 mbar**
If there is a leak, replace the solenoid valve.
Activate the flap with command **AC013 Turbulence flap**.
If the solenoid valve opens (vacuum pump pressure gauge returns to atmospheric pressure), go to **step C**.
Otherwise, with the solenoid valve connected, check operation of the computer output stage with a voltmeter:

Voltmeter earth cable → **track 1** of the solenoid valve

Voltmeter positive lead → **track 2** of the solenoid valve

Clear any solenoid valve faults,
Activate the flap with command **AC013**:
The voltmeter should display **three** ON-OFF cycles: (**+ 12.5 V** then return to **0 V**).
If the measurement is correct, replace the solenoid valve.
If the measurement does not show **any lights**, contact the Techline.
C) Vehicle with ignition off:
Connect a vacuum pump to the valve control diaphragm and apply a negative pressure of **~ 900 mbar**:
If the diaphragm **does not maintain the vacuum pressure**, replace the air distributor (the diaphragm cannot be separated from it).
If the diaphragm **maintains the vacuum pressure** and **no movement*** of the flap is detected, replace the air distributor.
If the diaphragm **maintains the vacuum pressure** and **movement* of the flap is detected**, replace the solenoid valve (check first that no fault of the type **DF056 Air flow sensor circuit, DF325 Exhaust gas recirculation function** or **DF301 Air inlet circuit** is present or stored; if it is, deal with it first).

* *Clicking inside the air distributor when the control vacuum pressure is reached.*

AFTER REPAIR	Deal with any other faults. Clear the fault memory. Switch off the ignition and carry out a road test followed by a check with the diagnostic tool.

GETtheMANUALS.org

AC031	THERMOPLUNGER No. 3 RELAY

NOTES	**There must be no present or stored faults.** Perform this fault finding procedure if there is a fault in the **command** menu, or a passenger compartment heating/demisting fault. Refer to the **Wiring diagrams** Technical Note for the vehicle to locate the fuses and relays concerned.

If the thermoplunger no. 3 relay does not operate when command **AC031 Thermoplunger no. 3 relay** is run.
Check the thermoplunger no. **3** relay mounting connections.
Check the engine management computer connections.
Repair if necessary.

If the fault is still present, check as follows that this relay is controlled by the engine management computer:
Disconnect the thermoplunger no. 3 relay, and fit a **50** to **100 Ω** resistor on the mounting instead of the coil and connect a voltmeter as follows:

- positive terminal to **+ 12 V** battery,
- negative terminal to **track 35** (depending on the engine) of the thermoplunger no. 3 relay mounting.

Clear the fault and activate the **AC031** command.
If the voltmeter indicates the battery voltage (two ON-OFF cycles of **2 seconds**), replace the thermoplunger no. 3 relay.
If the voltmeter does not show the battery voltage (two **2-second** ON-OFF cycles), contact the Techline.

If thermoplunger no. 3 relay operates with command AC031, but there is still a passenger compartment heating/demisting fault, check the following using the wiring diagram:
The conformity of the thermoplunger maxi-fuse.
The presence of the **+ 12 V battery** feed on **track 34** (depending on engine) of the thermoplunger no. **3** relay mounting.
The conformity of the thermoplunger no. **3** relay.
The continuity between **track 37** (depending on the engine) of the thermoplunger no. **3** relay mounting and the thermoplunger no. **4** supply terminal.
The conformity of the thermoplunger resistance: **0.45 Ω ± 0.05 at + 20˚C**.
The presence of the earth on the water chamber (thermoplunger mounting).
Also check the level of the cooling circuit and that there are no leaks.
Carry out the necessary repairs.

AFTER REPAIR	Deal with any other faults. Clear the fault memory. Switch off the ignition and carry out a road test followed by a check with the diagnostic tool.

GETtheMANUALS.org

AC034	LOW PRESSURE PUMP RELAY

NOTES	**There must be no present or stored faults.** Carry out this fault finding in the event of a high pressure pump supply fault. Refer to the **Wiring diagrams** Technical Note for the vehicle to locate the fuses and relays concerned.

If the low pressure pump relay is not working during command **AC034 Low pressure pump relay**.
Check the low-pressure pump relay mounting connections.
Check the engine management computer connections.
Repair if necessary.

If the vehicle is fitted with a **CP3** type high pressure pump, there are two possible scenarios:

- The vehicle is fitted with a priming pump which is required on starting. Command **AC034 Low pressure pump relay** must be working.
- The vehicle is fitted with a priming bulb required to bleed the low pressure circuit. Command **AC034 Low-pressure pump relay** is not useful.

If the vehicle is fitted with a **CP1** type high pressure pump, the low pressure circuit is ensured by a low pressure pump which continuously supplies the high pressure pump.
In this case command **AC034 Low pressure pump relay** must be working.

AFTER REPAIR	Deal with any other faults. Clear the fault memory. Switch off the ignition and carry out a road test followed by a check with the diagnostic tool.

GETtheMANUALS.org

AC035	FUEL PRESSURE SOLENOID VALVE

NOTES	Perform this fault finding procedure: – following interpretation of an unresolved fault – following detection of a fault in the Command menu, – following detection of an inconsistency in the Parameter menu, – following a customer complaint (starting problems, engine speed instability, injection noise).

Step 1
Measure the pressure regulator resistance between **tracks 1 and 2**.
If its resistance is not:
– **3 Ω ± 0.5 at + 20˚C for a CP3 high pressure pump**, replace the regulator.
– **2.5 Ω ± 0.5 at + 20˚C for a CP1 high pressure pump**, replace the regulator.

Check **the continuity and absence of interference resistance** on the connections between:

Engine computer, **connector B track L1** → **track 2** of the pressure solenoid valve connector

+ 12 V after relay → **track 1** of the pressure solenoid valve connector

Activate the **AC035 Fuel pressure solenoid valve** command, if a slight whistling and banging of the pressure regulator are perceptible, go to **step 2**. Otherwise, check the operation of the computer output stage:
Vehicle with + after ignition, clear the faults displayed by the diagnostic tool.
Either using an ammeter:
With the solenoid valve connected, connect the current clamp to the solenoid valve **track 1** connection (in the direction of the current): Activate command **AC035:**

➡ the ammeter should display ten successive cycles of two currents: **~ 0.6 A** then **~ 2 A**

Using a voltmeter:
With the solenoid valve connected, connect the voltmeter earth lead to **track 2** of the fuel pressure solenoid valve and the positive cable to **track 1**. Activate the **AC035** command.

➡ The voltmeter should display two successive voltages approximately equal to the battery voltage multiplied by the current opening cyclic ratio, i.e., alternately: **~ 3.15 V** for an opening cyclic ratio of **25%**, then **~ 9.45 V** for an opening cyclic ratio of **75%** (ten cycles).

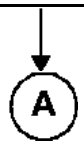

AFTER REPAIR	Deal with any other faults. Clear the fault memory. Switch off the ignition and carry out a road test followed by a check with the diagnostic tool.

GETtheMANUALS.org

AC035 **CONTINUED 1**	

A

Step 1 (continued)
Either by oscilloscope (calibrated at **5 V/div** and time base of **1 ms/div**):
With the solenoid valve connected, reconnect the oscilloscope earth to the battery earth and the positive contact tip to **track 2** of the fuel pressure solenoid valve and run command **AC035 Fuel pressure solenoid valve**:

➡ the oscilloscope should display a square wave signal of **12.5 V** at a frequency of **185 Hz** (with an opening cyclic ratio alternating between **25** to **75%**).

If the measurement taken is correct:
– For engines fitted with a CP3 high pressure pump, replace the regulator.
– For engines fitted with a CP1 high-pressure pump, flush the CP1 high-pressure pump (apply **test 2 High-pressure pump flushing**) for a vehicle (Laguna II) fitted with F9Q 752/754 engines.
– If the measurement is not correct, contact the Techline.

Step 2, next page.

AFTER REPAIR	Deal with any other faults. Clear the fault memory. Switch off the ignition and carry out a road test followed by a check with the diagnostic tool.

GETtheMANUALS.org

AC035 **CONTINUED 2**	

Step 2
In the event of rail overpressure:
Check that there are no air bubbles in the diesel fuel low pressure circuit.
Check that the rail pressure sensor is operating correctly. Interpretation of parameter **PR038 Rail pressure**.
If these checks reveal no irregularities, replace the regulator.
In the event of rail underpressure:
Check that the rail pressure sensor is operating correctly. Interpretation of parameter **PR038 Rail pressure**.
Check the low pressure diesel circuit priming.
Check the conformity of the diesel filter connections.
Check the condition of the filter (clogging and water saturation).
Check that there are no air bubbles between the filter and the high pressure pump.
Check the low and high-pressure diesel fuel systems for leaks: use ALP6 **External leaks on the fuel circuit** fault finding chart (visual inspections, touch tests, odours, etc.) on:
pump body, pressure release valve, pipes, rail and injectors unions, injector wells, etc.
Check the conformity of the seal fitting on the pressure regulator.
Check the operation of the injectors: run **test 10 Poor injector operation** in this document.
Carry out the necessary repairs.

If the engine starts:
Clear any faults on the fuel pressure solenoid valve.
Check the pressure regulating solenoid valve using part B of the ALP7: **Rough idle**.
With the engine warm, leave it running at idle speed a few minutes **(3 to 5 minutes)**:
– If it stalls and the fault reappears, replace the regulator.
– If it does not stall, stabilise the engine speed at **2000 rpm (1 minute)** then accelerate under full load until it cuts out.
If the engine stalls, replace the high pressure pump.
If the engine does not startor there is no timing:
first replace the regulator and, if the fault is still present, replace the high pressure pump.

AFTER REPAIR	Deal with any other faults. Clear the fault memory. Switch off the ignition and carry out a road test followed by a check with the diagnostic tool.

GETtheMANUALS.org

AC036	EGR VALVE

NOTES	Perform this fault finding procedure: – after interpretation of **DF325 "Exhaust gas recirculation function"** fault (2.DEF) unresolved, – after a customer complaint (lack of performance, smoke).

Step 1
Measure **the resistances** of the exhaust gas recirculation valve (***Pierburg*** *or* ***Cooper*** type):
* between **tracks 1 and 5: from 7.5 Ω to 8.5 Ω at + 20˚C**.
* For the ***Pierburg*** exhaust gas recirculation valve:
between **tracks 2 and 4: 2400 Ω to 5600 Ω at + 20˚C**.
between **tracks 2 and 6: 1900 Ω to 6400 Ω at + 20˚C**.
between **tracks 4 and 6: 800 Ω to 3800 Ω at + 20˚C**.
If one of the resistances is not correct, replace the exhaust gas recirculation valve.
Check **the continuity and absence of interference resistance** on the connections between:

Engine computer, **connector B track M1** → **track 5** of the exhaust gas recirculation valve connector

+ 12 V after relay → **track 1** of the exhaust gas recirculation valve connector

If when activating the **AC036 EGR valve** command no valve movement is perceptible, check the operation of the computer output step:
Vehicle with + after ignition, clear the faults displayed by the diagnostic tool.
Either by oscilloscope (calibrated at **5 V/div** and time base of **2 ms/div**):
With the exhaust gas recirculation valve connected, connect the oscilloscope earth to battery earth with the positive test pin on **track 5** of the exhaust gas recirculation valve.
Activate the **AC036 EGR valve** command.
The oscilloscope should display a square pulse signal of **12.5 V** at a frequency of **140 Hz** (with an Opening Cyclic Ratio passing from **25** to **75%**).
Using a voltmeter:
With the exhaust gas recirculation valve connected, connect the voltmeter's earth lead to **track 5** of the exhaust gas recirculation valve and the positive lead to **track 1**. Run command **AC036 EGR valve**; the voltmeter should display two successive voltages approximately equal to the battery voltage multiplied by the current Opening Cyclic Ratio.
That is, successively: **3.15 V** for an Opening Cyclic Ratio of **25%** then **9.45 V** for an Opening Cyclic Ratio of **75%** (10 cycles).
Conclusion:
If the measurement is correct, go to **Step 2**.
If the oscilloscope (or the voltmeter) does not indicate the actuation or a continuous voltage, contact the Techline.

Step 2, next page.

AFTER REPAIR	Deal with any other faults. Clear the fault memory. Switch off the ignition and carry out a road test followed by a check with the diagnostic tool.

GETtheMANUALS.org

AC036 **CONTINUED**	

Step 2
Check that there are no leaks on the exhaust gas recirculation circuit.
Carry out the necessary repairs.
Check the exhaust gas recirculation valve operation:
Apply **test 9 Exhaust gas recirculation valve**, part A.

AFTER REPAIR	Deal with any other faults. Clear the fault memory. Switch off the ignition and carry out a road test followed by a check with the diagnostic tool.

GETtheMANUALS.org

AC037	PREHEATING RELAY

NOTES	This command is only executed if the **DF186 Heater plugs circuit** fault or the **DF017 Preheating unit control circuit** fault is present or stored and if no other fault is present. Carry out the procedure for these 2 faults first. Refer to the **Wiring diagrams** Technical Note for the vehicle to locate the fuses and relays concerned.

Before applying the following fault finding procedure, check that the battery voltage is not below 12 V. Otherwise, recharge the battery.

Step 1:

Using a multimeter fitted with an Amps clamp, group together the 4 supply wires for the heater plugs.
Run command **AC037 Preheating relay** and measure the current consumed by the 4 heater plugs.
If the current consumed is not between **60 A** and **80 A** inclusive, go to step 2, otherwise end of procedure.

Step 2:

Check the connections on the pre-postheating unit, heater plugs and injection computer.
Repair if necessary.
Measure **the resistance** of the heater plugs. If this resistance is **> 2** Ω, replace the defective plug(s).
Check **the continuity and for the absence of interference resistance** between:

preheating unit track 1 → cylinder 3 heater plug
preheating unit track 2 → cylinder 4 heater plug
preheating unit track 6 → cylinder 1 heater plug
preheating unit track 7 → cylinder 2 heater plug.

Check **the condition** of the supply fuse (70 A) for the preheating unit. Replace it if necessary.
Then check for the **+ 12 V feed** on **track 3** of the preheating relay connector.
Check **the continuity and for the absence of interference resistance** between:

Injection computer connector **B track B3** → **track 9** of the preheating unit connector
Injection computer connector **B track C3** → **track 8** of the preheating unit connector

If the fault is still present, replace the pre-postheating unit.

AFTER REPAIR	Deal with any other faults. Clear the fault memory. Switch off the ignition and carry out a road test followed by a check with the diagnostic tool.

GETtheMANUALS.org

AC038	LOW-SPEED FAN ASSEMBLY RELAY

NOTES	**There must be no present or stored faults.** Perform this fault finding procedure if a malfunction appears on the **command** menu or after an engine cooling system or air conditioning fault. Refer to the **Wiring diagrams** Technical Note for the vehicle to locate the fuses and relays concerned.

If, when running command **AC038, the low-speed fan assembly relay** does not operate:
Check the **low speed fan assembly** relay mounting and the connections of the engine management computer.
Repair if necessary.

If the fault is still present, check that the relay is actuated by the engine management computer as follows:
Disconnect the **low-speed fan assembly** relay, and fit a **50** to **100** Ω resistor on the relay mounting in place of the coil, and connect a voltmeter as follows:

- positive terminal to **+ 12 V** battery,
- negative terminal on **track 11** of the **low-speed fan assembly relay** mounting.

Clear the fault and run command **AC038**
If the voltmeter indicates the battery voltage (three **2-second** ON-OFF cycles), replace the relay.
If the voltmeter does not show the battery voltage (three **2 second** ON-OFF cycles), contact the techline.

If the **low-speed fan unit** relay is actuated but there remains a fan unit triggering fault, check the following using the wiring diagram:
The conformity of the fan assembly maxi-fuse.
The conformity of the low-speed fan assembly relay.

The continuity of the connection between **track 9** of the **low-speed fan assembly** relay mounting and **track 1** of the low-speed resistor,
The conformity of the low-speed resistor (resistance and connectors).
The continuity of the connection between **track 2** of the low speed resistor connector and **track 2** of the fan assembly connector.
The conformity of the fan assembly and the continuity of **track 1** to earth.
Carry out the necessary repairs.

AFTER REPAIR	Deal with any other faults. Clear the fault memory. Switch off the ignition and carry out a road test followed by a check with the diagnostic tool.

GETtheMANUALS.org

AC039	HIGH SPEED FAN ASSEMBLY RELAY

NOTES	**No fault should be present or stored:** Perform this fault finding procedure after a malfunction appears on the **command** menu or following an engine cooling fault. Refer to the **Wiring diagrams** Technical Note for the vehicle to locate the fuses and relays concerned.

If, when command **AC039 High-speed fan assembly** is run, the **high speed fan assembly relay** does not operate:
Check the **high speed fan assembly relay** mounting and the engine management computer connectors.
Repair if necessary.

If the fault is still present, check that the relay is actuated by the engine management computer as follows:
Disconnect the **high speed fan assembly** relay, place a **50** to **100 Ω** resistor on its mounting in place of the coil, and connect a voltmeter as follows:

- positive terminal to **+ 12 V** battery,
- negative terminal to **track 7** of the **high-speed fan assembly** relay mounting for engines.

Clear the fault and run command **AC039**
If the voltmeter indicates the battery voltage (three **2-second** ON-OFF cycles), replace the relay.
If the voltmeter does not show the battery voltage (three **2-second** ON-OFF cycles), contact the techline.

If the **high-speed fan assembly** relay is supplied using command **AC039,** but there is still a fan assembly activation fault, check the following using the wiring diagram:
The conformity of the fan assembly maxi-fuse.

The battery + feed of **track 8** of the **high-speed fan assembly** relay mounting.
the conformity of the **high-speed fan assembly relay**,
the continuity of the connection between **track 5** of the **high-speed** fan assembly relay and **track 2** of the fan assembly connector;
The conformity of the fan assembly.
The continuity of the connection between **track 1** of the fan assembly connector and **earth**.
Carry out the necessary repairs.

AFTER REPAIR	Deal with any other faults. Clear the fault memory. Switch off the ignition and carry out a road test followed by a check with the diagnostic tool.

GETtheMANUALS.org

AC063	THERMOPLUNGER No. 1 RELAY

NOTES	(check that the computer is correctly configured) **No fault should be present or stored:** Perform this fault finding procedure if there is a fault in the **command** menu, or a passenger compartment heating/demisting fault. Refer to the **Wiring diagrams** Technical Note for the vehicle to locate the fuses and relays concerned.

If the thermoplunger no. 1 **relay does not operate** during command **AC063 Thermoplunger no. 1 relay**:
Check the connections of the thermoplunger no. 1 relay mounting.
Check the engine management computer connections.
Repair if necessary.

If the fault is still present, check as follows that this relay is controlled by the engine management computer:
Disconnect thermoplunger no. 1 relay, and fit a **50 Ω** to **100** Ω resistor on the mounting instead of the coil and connect a voltmeter as follows:

- positive terminal to **+ 12 V** battery,
- negative terminal to **track 65** (depending on the engine) of the thermoplunger no. 1 relay mounting.

Clear the fault and actuate the relay using command **AC063**.
If the voltmeter indicates the battery voltage (two ON-OFF cycles of **2 seconds**), replace the thermoplunger no. 1 relay.
If the voltmeter does not show the battery voltage (two **2-second** ON-OFF cycles), contact the Techline.

If the thermoplunger no. 1 relay **is supplied**, but there is still a passenger compartment heating/demisting fault.
Check using the wiring diagram:
The conformity of the thermoplunger maxi-fuse.
The presence of **+ 12 V battery** feed on **track 67** (depending on the engine) of the thermoplunger no. 1 relay mounting.
The conformity of the thermoplunger no. 1 relay.
The continuity between **track 63** (depending on the engine) of the thermoplunger no. 1 relay mounting and supply terminal of thermoplunger no. 1.
The conformity of the thermoplunger resistance: **0.45 Ω ± 0.05 at + 20˚C**.
The presence of the earth on the water chamber (thermoplunger mounting).
Also check the level of the cooling circuit and that there are no leaks.
Carry out the necessary repairs.

AFTER REPAIR	Deal with any other faults. Clear the fault memory. Switch off the ignition and carry out a road test followed by a check with the diagnostic tool.

GETtheMANUALS.org

AC064	THERMOPLUNGER No. 2 RELAY

NOTES	(check that the computer is correctly configured) **No fault should be present or stored:** Perform this fault finding procedure if there is a fault in the **command** menu, or a passenger compartment heating/demisting fault.
	Special notes: The thermoplunger No. **2** relay supplies thermoplungers 2 and 3 in parallel. Refer to the **Wiring diagrams** Technical Note for the vehicle to locate the fuses and relays concerned.

If thermoplunger no. 2 relay **does not operate**, during command **AC064 Thermoplunger no. 2 relay**:
Check the connections of the **thermoplunger no. 2 relay** mounting.
Check the engine management computer connections.
Repair if necessary.

If the fault is still present, check as follows that this relay is controlled by the engine management computer:
Disconnect the thermoplunger no. 2 relay, and fit a **50** to **100 Ω** resistor on the mounting instead of the coil and connect a voltmeter as follows:

- positive terminal to **+ 12 V** battery,
- negative terminal to **track 3** (depending on the engine) of the thermoplunger no. 2 relay mounting.

Clear the fault and run command **AC064**.
If the voltmeter indicates the battery voltage (2 ON-OFF cycles of **2 seconds**), replace the thermoplunger no. 2 relay.
If the voltmeter does not show the battery voltage (two **2-second** ON-OFF cycles), contact the Techline.

If the thermoplunger no. 2 relay operates with command AC064, but there is still a passenger compartment heating/demisting fault. Check using the wiring diagram:
The conformity of the thermoplunger maxi-fuse.
The presence of the **+ 12 V battery feed** on **track 1** (depending on the engine) of the thermoplunger no. 2 relay mounting.
The conformity of the thermoplunger no. 2 relay.
The continuity between **track 2** of the thermoplunger no. 2 relay mounting and the supply terminals of thermoplungers **2 and 3** (except on the 16-seater Master bus, thermoplunger no. 2).
The conformity of the thermoplunger resistors: **0.45 Ω ± 0.05 at + 20˚C**.
The presence of the earth on the water chamber (thermoplunger mounting).
Also check the level of the cooling circuit and that there are no leaks.
Carry out the necessary repairs.

AFTER REPAIR	Deal with any other faults. Clear the fault memory. Switch off the ignition and carry out a road test followed by a check with the diagnostic tool.

GETtheMANUALS.org

AC067	DAMPER VALVE

NOTES	Carry out this interpretation: – after **DF056 Air flow sensor circuit**, 2.DEF, – in the case of incorrect operation detected in the **command** menu, – or after a customer complaint (starting faults, poor performance).

Measure the **resistance** of the damper valve solenoid valve between **tracks 1 and 2**.
Replace the solenoid valve if the resistance is not: **46 Ω ± 3 at + 25°C**.
Check **the continuity and absence of interference resistance** on the connections between:

Engine management computer **connector C track F4** ⟶ **track 1** of the damper valve solenoid valve connector

+ 12 V after relay ⟶ **track 2** of the damper valve solenoid valve connector

A) Engine running at idle speed:
Make sure there is a vacuum pressure of **~ 900 mbar** in the solenoid valve inlet hose.
Make the necessary repairs (vacuum pressure circuit conformity and seal).
B) With the vehicle ignition on, engine stopped:
Make sure the **damper valve** is **open**.
If not, clean or replace the air vent unit.
Disconnect the solenoid valve inlet and outlet hoses,
Connect a vacuum pump to the inlet union and apply vacuum pressure of **~ 900 mbar**.
If there is a leak, replace the solenoid valve.
Control the valve using command **AC067**.
If the solenoid valve opens (vacuum pump pressure gauge returns to atmospheric pressure), go to **step C**.
Otherwise, with the solenoid valve connected, check operation of the computer output stage with a voltmeter:

Voltmeter earth cable ⟶ **track 1** of the damper valve solenoid valve

Voltmeter positive lead ⟶ **track 2** of the damper valve solenoid valve connector

Clear any solenoid valve faults,
Actuate the valve via the **AC067** command:
The voltmeter should display **three cycles** of ON-OFF (**12.5 V** then return to **0 V**).
If the measurement is correct, replace the solenoid valve.
If the measurement does not show any lights, contact the Techline.
C) Vehicle with ignition off:
Connect a vacuum pump to the valve control diaphragm and apply a negative pressure of **~900 mbar**:
If the diaphragm **does not maintain the negative pressure**, replace the air vent unit (the diaphragm cannot be disconnected).
If the diaphragm **maintains the vacuum pressure** and **the flap does not move**, clean or replace the diffuser unit.
If the diaphragm **maintains the vacuum pressure** and **the flap moves** then operate it several times to ensure that there is no blockage.
Check for clogging of the air vent unit and its valve, and clean if necessary.

AFTER REPAIR	Deal with any other faults. Clear the fault memory. Switch off the ignition and carry out a road test followed by a check with the diagnostic tool.

GETtheMANUALS.org

VP007	DECREASING THE IDLE SPEED

NOTES	This decrease is possible with the engine at idle speed or stopped (+ after ignition feed switched on) If the adjustment was not made previously, then the idling speed default value is **PR190 Idle speed setpoint** (850 rpm ± 50). When computer data is backed up using command **SC003 Save computer data**, the special vehicle engine speed value is saved.

This command is used to decrease the engine's idle speed by - 50 rpm minimum and in stages of - 10 rpm.

AFTER REPAIR	Deal with any other faults. Clear the fault memory. Switch off the ignition and carry out a road test followed by a check with the diagnostic tool.

GETtheMANUALS.org

VP011	INCREASING THE IDLE SPEED

NOTES	This decrease is possible with the engine at idle speed or stopped (+ after ignition feed switched on) If the adjustment was not made previously, then the idling speed default value is **PR190 Idle speed setpoint** (850 rpm ± 50). When computer data is backed up using command **SC003 Save computer data**, the special vehicle engine speed value is saved.

This command is used to increase the engine's idle speed by + 50 rpm minimum and in increments of + 10 rpm.

AFTER REPAIR	Deal with any other faults. Clear the fault memory. Switch off the ignition and carry out a road test followed by a check with the diagnostic tool.

GETtheMANUALS.org

NOTES	Only refer to the customer complaints after performing a complete check using the **diagnostic tool**.

NO DIALOGUE WITH ENGINE MANAGEMENT COMPUTER →	**ALP1**
STARTING FAULT OR STARTING IMPOSSIBLE →	**ALP2**
INJECTION NOISE →	**ALP3**
POOR PERFORMANCE →	**ALP4**
IRREGULAR ENGINE OPERATION →	**ALP5**
EXTERNAL LEAKS FROM THE FUEL CIRCUIT →	**ALP6**
ROUGH IDLE →	**ALP7**
OIL LEAKS FROM THE TURBOCHARGER →	**ALP8**

GETtheMANUALS.org

ALP1	No dialogue with engine management computer

NOTES	None.

STEP 1

Check the conformity of the vehicle type and the domain selected on your tool.

Check that the tool is not faulty by trying to establish dialogue with a computer on another vehicle.

Check the supply to the diagnostic socket:

↪ + Before ignition on **track 16** / +After ignition on **track 1** / Earth on **tracks 4 and 5**

Check (according to wiring diagram and equipment):

– The conformity of the after ignition fuse.

– The conformity of the injection relay mounting supplies.

– The conformity of the impact sensor: continuity between **tracks 1 and 3** In rest position (before impact)

12 V battery ⟶ **track 3** (by fuse)

continuity between **track 3** and **track 1** of the injection relay

– **The conformity of the injection relay: 65 Ω ± 5** between **tracks 1 and 2**

infinite resistance between **tracks 3** and **5** (open contact)

resistance **< 0.2 Ω** between **tracks 3** and **5** (closed contact).

Disconnect the engine management computer and check that there are no conducting parts on the computer studs.

If this reveals any kind of impurity, rectify it and try to establish dialogue.

If the fault is still present, place bornier **Elé. 1681** on the engine wiring harness:

Check the **continuity and absence of interference resistance** on the following connections:

Engine management computer, **connector A track C3** ⟶ **Diagnostic socket track 7 (line K)**

Engine management computer, **connector A track D3** ⟶ **Diagnostic socket track 15 (line L, if wired)**

Ensure that the power supplies are in order:

Engine computer, **connector B track E3** ⟶ **+ After ignition feed**

Engine computer, **connector A track D3** ⟶ **Earth**

By **putting a shunt** across **tracks 3 and 5** of the central injection unit feed relay mounting, check the continuity of the connection between:

Engine management computer, **connector B tracks M3 and M2** ⟶ **+ 12 V battery feed** (by test shunt)

Check the continuity of the connection between:

Engine management computer, **connector B track D4** ⟶ **track 2** of the central injection unit feed relay mounting

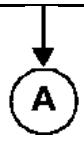

AFTER REPAIR	Carry out a road test followed by a complete check with the **diagnostic tool**.

GETtheMANUALS.org

ALP1 CONTINUED	

Try to start communication with another computer on the same vehicle.

➡ If dialogue can be established with **another computer on the same vehicle**, go to **step 2**.

➡ If dialogue cannot be established **with any other computer on the same vehicle**, the cause could be a faulty computer interfering on the **K and/or L lines.** To locate it, proceed by elimination by successively disconnecting all the computers connected to these lines (using wiring diagram and depending on equipment): Air conditioning, Airbag, ABS and ESP, UCH, instrument panel, central communication unit, parking proximity sensor. Try to establish dialogue after disconnecting each line:

If, after a disconnection, you manage to establish dialogue, perform the fault finding procedure for the computer concerned.

- ↪ If the fault is still present, reconnect the computers listed above and disconnect the engine management computer. Try to establish dialogue with another computer.
  If you manage to establish dialogue, go to **step 2.**
- ↪ If you still cannot establish dialogue, disconnect **all** the computers connected to lines **K and/or L** and check the insulation against **+ 12 V** and against earth on **track 7** and **track 15** of the **diagnostic socket**. Carry out the necessary repairs.

STEP 2

Contact Techline.

AFTER REPAIR	Carry out a road test followed by a complete check with the **diagnostic tool**.

GETtheMANUALS.org

ALP2	Starting difficult (or impossible)

NOTES	**Apply ALP2 after a complete check using the diagnostic tool.**

Is it difficult or impossible to start the engine?

impossible → B

difficult ↓

PART A:
Check the engine earths.
Ensure that engine speed reaches **250 rpm** with the starter motor, as displayed on the parameter screen (**PR055 Engine speed**).
If the engine speed is less than **250 rpm**, refer to Technical Note 6014A, Charging circuit check, 16A (formerly Technical Note 3455A), Starter motor fault finding, Starter motor (formerly Technical Note 3632A).
If the engine speed shown on CLIP is zero and the engine is running, measure the **resistance** of the engine speed sensor across **tracks 1 and 2 or A and B**:
Replace the sensor if its resistance is not: **800 Ω± 80 at + 20˚C on F9Q engine**
235 Ω ± 35 at + 23˚C on G9T - G9U engines

Check the **continuity** of the following connections on **G9T/G9U engines**:

Engine computer, **connector B track G3** → **track 1** of the engine speed sensor

Engine computer, **connector B track H3** → **track 2** of the engine speed sensor

Check the **continuity** of the following connections **on F9Q engines**:

Engine computer, **connector B track G3** → **track A** of the engine speed sensor

Engine computer, **connector B track H3** → **track B** of the engine speed sensor

Check that the engine earthing is in order (oxidation, tightness, etc.).
Check the mounting, the gap (if necessary refer to the information in the workshop repair manual for the vehicle) and the condition of the sensor (overheating).
Replace if necessary.
Check the synchronisation of the camshaft sensors and the engine speed sensors with the display of **ET238 Synchronisation**. If the synchronisation is not **COMPLETED**, refer to the checks described in **DF195 Camshaft/ engine speed consistency**.
Check the fuel circuit sealing: apply **test 3**.
If **test 3** is correct, see **DF197 Fuel pressure signal** 2.def, step 4.

AFTER REPAIR	Carry out a road test followed by a complete check with the **diagnostic tool**.

GETtheMANUALS.org

ALP2 CONTINUED 1	

Check that the heater plugs are actuated using the **AC037 Preheating relay** command.
Check the sealing and condition of the inlet circuit: apply **test 4**, follow the associated diagnostic procedure.
Check that there are no foreign bodies on the flow sensor grille: apply **test 5**, follow the associated diagnostic procedure.
Check the position of the exhaust gas recirculation valve: apply **test 9**.
Check that the exhaust is not blocked: apply **test 1**, follow the associated diagnostic procedure.
Check the consistency of the signal from the engine coolant temperature sensor.
Check that the pressure regulator is working properly (see command **AC035 Fuel pressure solenoid valve**).
Check that the injectors are working properly (return leakage too high, clogging, sticking): apply **test 10**.
Check the engine timing (and the position of the high pressure pump sprocket).
Check the balance of the compressions, according to the power consumption during the starting phase (**Compression test** menu on the CLIP Technic tool).

If you do not have the CLIP Technic tool, or in case of imbalance, use a compression gauge to perform the measurement (see procedure in the Workshop Repair Manual). after the operation, clear the faults caused by disconnecting the regulator and the heater plugs.

AFTER REPAIR	Carry out a road test followed by a complete check with the **diagnostic tool**.

GETtheMANUALS.org

ALP2

CONTINUED 2

B

Is there diesel in the tank?

NO → Fill the tank with diesel fuel. Bleed the low and high pressure diesel circuit.

YES

Does the starter motor work properly (Check that the engine speed reaches **> ~ 250 rpm** with the starter motor, **PR055 Engine speed**)

NO → Refer to Technical Note 6014A, Check the charging circuit, 16A (formerly Technical Note 3455A), Starter fault finding, starter (formerly Technical Note 3632A).

YES

Using the diagnostic tool, check the conformity of the immobiliser: **ET003 Immobiliser** must be **INACTIVE**.

ET003 not in order, or immobiliser warning light continuously lit

Consult the fault finding procedure for the immobiliser.

ET003 in order (immobiliser code warning light switched off)

continue the fault finding procedure with part a of this fault finding chart.

AFTER REPAIR	Carry out a road test followed by a complete check with the **diagnostic tool**.

GETtheMANUALS.org

ALP3	Injection noise

NOTES	**Apply ALP3 after a complete check using the diagnostic tool.**

If the injection noise occurs after starting from cold:

Check the low pressure diesel circuit priming.
Check the fuel heater supply.
Check the operation of the preheating system.
Check that fuel and engine temperatures are consistent.

If the injection noise occurs at idle speed:

Check the condition of the injector connector and pressure regulator terminals.
Check the conformity of the air flow signal: use the: **PR132 Air flow** diagnostics or apply **test 4**.

If the fault is still present, perform the injector fault finding procedure: apply **test 10**.

does the injection noise occur at all engine speeds?

Perform fault finding on the injectors: apply **test 10**.
Check the condition of the injector connector and pressure regulator terminals.
Ensure that the correct fuel is being used.
Apply **test 12 Diesel fuel conformity check**.

Check the conformity of the air flow signal: use the interpretation of the fault finding procedure **PR132 Air flow**.
If the customer complaint is still present:
Run command **AC035 Fuel pressure solenoid valve**.
Then apply the conformity check associated with this note, in order to check:
– the conformity of the fuel pressure: **PR038 Rail pressure**,
– the conformity of the fuel flow from the pump: **PR017 Fuel flow**.
If the fault is still present, contact the techline.

AFTER REPAIR	Carry out a road test followed by a complete check with the **diagnostic tool**.

GETtheMANUALS.org

ALP4	Poor performance

NOTES	**Apply ALP4 after a complete check using the diagnostic tool.**

IMPORTANT
In the event of the engine overheating to more than **119 ˚C**, the computer will voluntarily limit the fuel flow (warning light comes on after **115 ˚C**).
– Please observe the cleanliness guidelines and safety advice.

Is the poor performance accompanied by smoke? — **NO** → **A**

YES ↓

Check:
– that the correct fuel is being used.
– Apply **test 12 Diesel fuel conformity check**.
– The conformity of the assembly of the injectors (presence and **conformity of the sealing washer**).
Checking procedure:
– Take a straightedge approximately 40 cm long and place it on the 4 injectors. The straightedge should rest on the 4 injectors.
– If 1 injector protrudes, remove the injector and check that the washer is correct.
– If one injector does not touch the straightedge (clearance of more than 1 mm), remove the injector and check that the washer is present.
– Clean the injector well and the injector, refit the injector with its correct sealing washer.
– The sealing and condition of the inlet circuit: apply **test 4**.
– The condition of the air flow sensor: apply **test 5**.
– The turbocharger: apply **test 6** for a fixed geometry turbocharger, **test 7** for a variable geometry turbocharger then **test 8** in both cases.
Road test with another cotech:
– The engine must be warm.
– Select 3rd or 4th gear, accelerate with full load on the accelerator.
– Ask the cotech to display the following parameters:
PR209 Turbocharging pressure loop difference,
PR041 Turbocharging pressure,
PR132 Air flow,
PR055 Engine speed.
Check that the turbocharging pressure follows the increase in the engine speed and that the turbocharging pressure loop difference is low. Otherwise, replace the turbocharger.
Apply **test 9**, part A.

AFTER REPAIR	Carry out a road test then check with **the diagnostic tool**.

GETtheMANUALS.org

ALP4 CONTINUED	

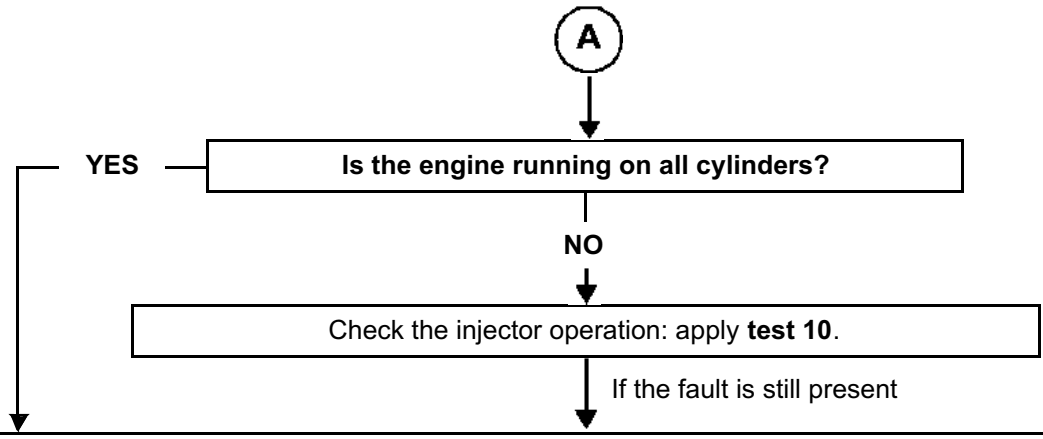

Check the conformity of the accelerator pedal position sensor, the brake pedal sensor, the atmospheric pressure sensor, the exhaust gas recirculation valve and the damper valve.

– Check the consistency of the signal: of the air flowmeter, of the engine coolant temperature sensor, of the fuel temperature sensor and of the engine speed.

Check the connections, continuity and absence of interference resistance of the air flowmeter (apply **DF056 Air flowmeter circuit**, 2.def), the engine coolant temperature sensor (apply **DF001 Coolant temperature circuit**, 1.def), the fuel temperature sensor (apply **DF098 Fuel temperature sensor circuit**, CO.1) and the engine speed (apply **DF195 Camshaft sensor/engine speed consistency**, 2.def).

Check that the turbulence flap is open at rest position: command interpretation **AC013 Turbulence flap** (depending on features).

Check:
- That the diesel fuel filter is not clogged (see **DF197 Fuel pressure signal** 2.def, continued 2, for the check).
- that there are no leaks on the high and low pressure diesel circuits: apply **test 3**.
- That the oil vapour rebreathing system is connected.
- The flow regulator (jamming/sticking: apply command interpretation AC035 **Fuel pressure solenoid valve**).

– Check the timing adjustment (and the position of the high-pressure pump sprocket) (See procedure in the **Workshop Repair Manual if necessary**).

– Check the cylinder compressions (balance of the cylinder compressions with the compression test function on the CLIP Technic tool).

– Measure the engine compressions with the special tool (Refer to the procedure in the **Workshop Repair Manual if necessary**).

If the fault is still present, contact the techline.

AFTER REPAIR	Carry out a road test followed by a complete check with the **diagnostic tool**.

GETtheMANUALS.org

ALP5	Irregular engine operation

NOTES	**Follow ALP 5 after a complete check with the diagnostic tool.**

If the engine races during gear changes, check, if there is a floor carpet, that this is not blocking the accelerator pedal, the brake pedal or the clutch pedal, then check the conformity of the clutch switch and the conformity of the accelerator pedal sensor when the pedal is released.
Measure **the resistance** of the engine speed sensor between **tracks 1 and 2 or A and B**.
Replace the sensor if its resistance is not: **800 Ω± 80 at + 20˚C on F9Q engine**
235 Ω ± 35 at + 23˚C on G9T - G9U engines

Check the **continuity** of the following connections on G9T/G9U engines**:**

Engine computer, **connector B track G3** → **track 1** of the engine speed sensor

Engine computer, **connector B track H3** → **track 2** of the engine speed sensor

Check **the continuity** of the following connections on F9Q engines:

Engine computer, **connector B track G3** → **track A** of the engine speed sensor

Engine computer, **connector B track H3** → **track B** of the engine speed sensor

Check that the engine earthing is in order (oxidation, tightness, etc.).
Check the mounting, the gap (if necessary refer to the information in the workshop repair manual for the vehicle) and the condition of the sensor (overheating).
Replace if necessary.
Check the low pressure circuit: apply **test 3**.
– Check the pressure regulating solenoid valve using part B of **ALP7 Rough idle**.
approximately 1350 bar under load with foot hard down on the accelerator.
– Apply the method used for checking the air flow, explained in the Conformity check section.
– Check the turbocharger: apply **test 6** for a fixed geometry turbocharger, **test 7** for a turbocharger with variable geometry, then **test 8** in both cases.
– Use the procedure for checking the hydraulic circuit that is explained in the Conformity check.

If the fault is still present:
– Check the balance of the cylinders using the CLIP Technic function, **Compression test** physical measurements icon.
– Check the engine compressions with the special tool, if necessary.

AFTER REPAIR	Carry out a road test followed by a complete check with the **diagnostic tool**.

GETtheMANUALS.org

ALP6	Fuel system leaks

NOTES	**Follow ALP 6 after a complete check with the diagnostic tool.** **IMPORTANT** **Please observe the cleanliness guidelines and safety advice.**

Procedure for checking for an external leak on the fuel circuit:
Clean away traces of grease with clean thinner and wipe the part or parts concerned with cleaning cloths.
Start the engine and increase the engine temperature until the diesel fuel reaches 50/60˚C.
Stop the engine and check for traces of grease on the part or parts concerned.
If this is the case, replace the part or parts concerned.
Bleed the fuel circuit and continue the checks.

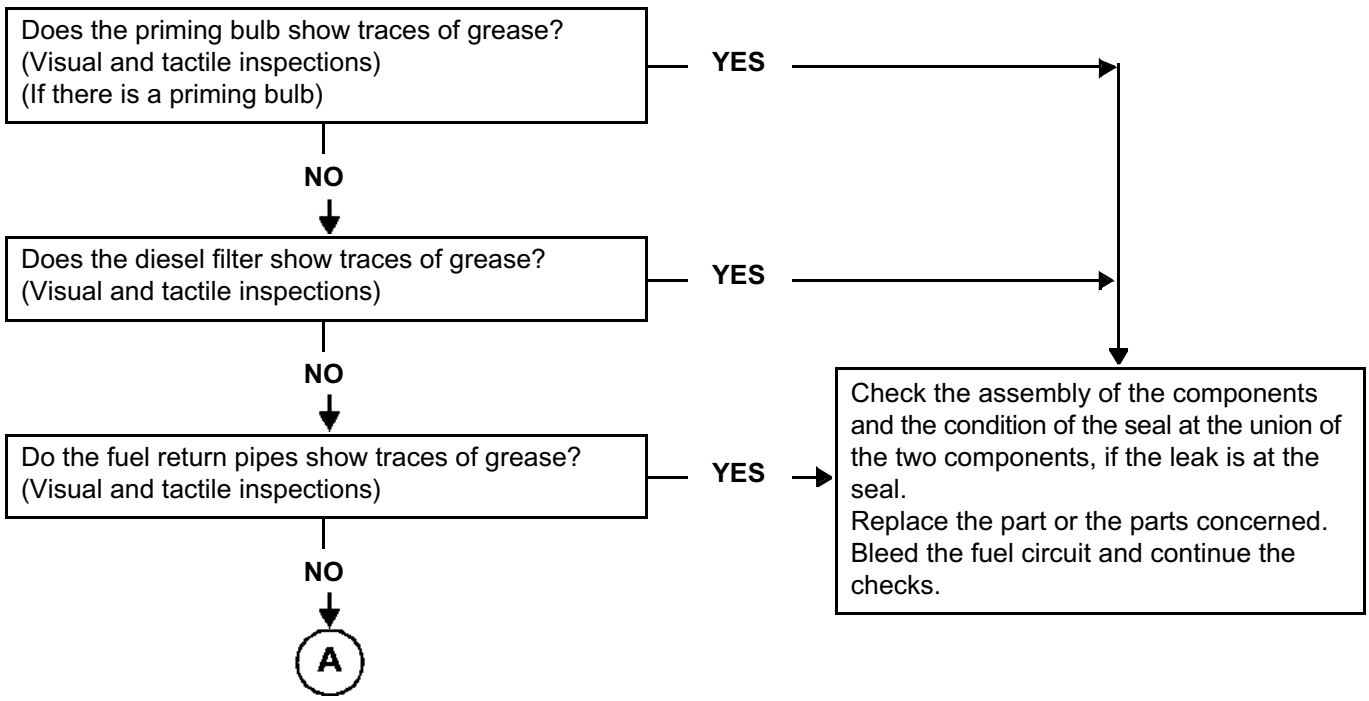

AFTER REPAIR	Carry out a road test followed by a complete check with the **diagnostic tool**.

GETtheMANUALS.org

ALP6 CONTINUED	

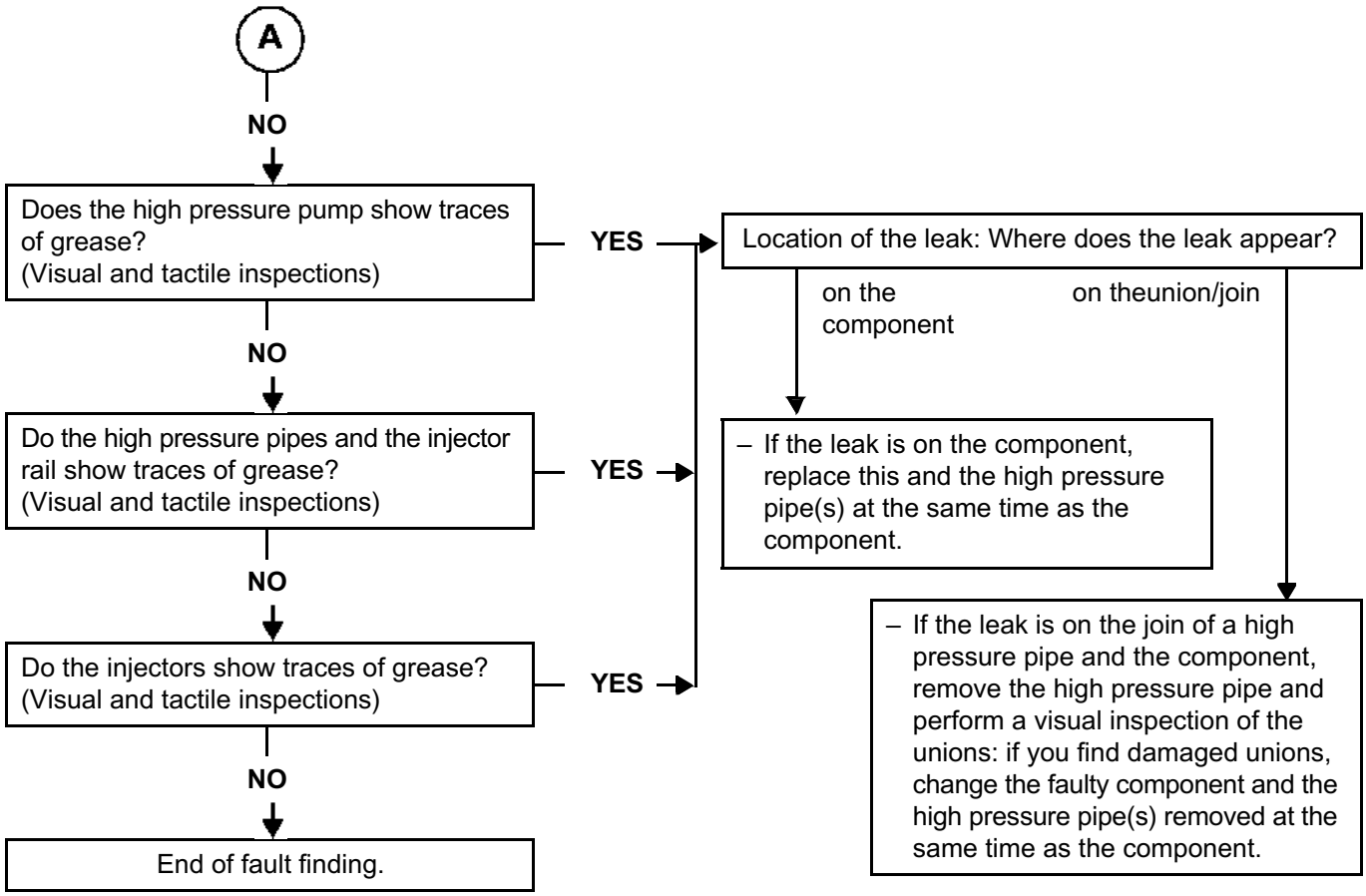

Reminder:
Do not replace the rail, pump or injector unless the union is damaged during the visual inspections.
Bleed the fuel circuit and continue the checks.

AFTER REPAIR	Carry out a road test followed by a complete check with the **diagnostic tool**.

GETtheMANUALS.org

ALP7	Rough idle

NOTES	**Before analysing this customer complaint, check that there are no faults, and the conformity (or otherwise) of the parameters and statuses using the diagnostic tool.** **If the customer complaint is not eliminated, perform the following checks.**

Check the sealing and condition of the inlet circuit using **Test 4 Turbocharged air circuit test and Test 9 Exhaust gas recirculation valve.**

↓

Check the low pressure circuit, run **Test 3 Low pressure circuit check.**

↓

check the engine parameters:
– check the update of the engine management computer calibration (last calibration).
– Check the conformity of the **IMA** codes (using the **Identification screen** of the **CLIP diagnostic tool**).
– Check the charging circuit (see **Technical Note 6014A Checking the charging circuit**).

– To check the conformity of the engine speed signal, check:
* The wiring.
* The flywheel position and the condition of the flywheel teeth.
* The position and tightness of the engine speed sensor.

– Check the fuel flow correction from station to station: run **Test 10 Poor injector operation**.

↓

Check the connections and wiring of the injectors.
Check the connections and wiring from the engine management computer to the injectors.
Repair if necessary.

↓

Check the high pressure circuit (external leaks) (see the end of **ALP6 Fuel circuit external leaks**).

↓

(A)

AFTER REPAIR	Carry out a road test followed by a complete check with the **diagnostic tool**.

GETtheMANUALS.org

ALP7 CONTINUED	

Check the timing setting (and the position of the high pressure pump pinion)

Check the lower engine:
– Check the compressions using the CLIP Technique **diagnostic tool**, **Compression test** or the special tool.
– Check the engine mountings only if there is noise or excessive vibrations at idle speed.
If the checks are correct, contact the Techline.

AFTER REPAIR	Carry out a road test followed by a complete check with the **diagnostic tool**.

GETtheMANUALS.org

ALP8	Oil leaks from the turbocharger

NOTES	**Complete ALP8 after a complete check using the diagnostic tool.**

Clean the oily parts of the turbocharger, when cold, with cleaning cloths (part number: 77 11 211 707).

→ At idle speed, check if the turbocharger is leaking from the turbocharger oil supply inlet or outlet, from the turbine inlet or outlet or from the compressor and the rear plate of the compressor housing.

← If the leak is at the inlet or outlet of the turbocharger's oil supply.
Replace the seal of the leaky pipe or the pipes if necessary.

↓

If the leak is at the inlet or outlet of the turbine* or of the compressor*.
Check manually if the end play is normal or excessive (see photograph on the next page).
Is the end float normal?

NO → Replace the turbocharger and check:
– that the turbocharger oil supply circuit is not blocked.
Perform an oil change and change the oil filter.
Change the air duct.
Empty and clean the intercooler and the air circuit ducts.

↓

IMPORTANT
Risk of destroying the new turbocharger and the engine if the air circuit is not cleaned and the oil and its filter are not replaced.

YES

↓

If the leak is on the rear plate (compressor housing).
Replace the turbocharger.

*Note:
It is normal to find traces of oil at the turbocharger inlet and outlet, as the air passing through the compressor is loaded with oil from the engine rebreathing circuit.

The operating play of the turbocharger bearings is approximately 25 µm between the turbocharger shaft and the internal mating face of the bearings and 75 µm between the exterior part of the bearings and the bearing housing.
Risks:
In the event of destruction of the turbocharger bearings, the steel and bronze swarf from this destruction are evacuated through the turbocharger oil to the engine's oil sump. The swarf can, consequently, be returned to the oil circuit via the oil pump, then cause widespread contamination of the engine oil circuit. This causes abnormal wear on the crankshaft bearing bushings, the con rod bearing shells and the camshafts, etc.
In the event of the compressor wheel breaking, parts of the blades may be found in the intercooler or in the air circuit ducts. The turbine wheel could easily be found in the catalytic converter.

AFTER REPAIR	Carry out a road test followed by a complete check with the **diagnostic tool**.

GETtheMANUALS.org

EXHAUST SYSTEM CHECK → TEST1

FLUSHING THE HIGH PRESSURE PUMP → TEST2

LOW PRESSURE CIRCUIT TEST → TEST3

TURBOCHARGED AIR INLET CIRCUIT CHECK → TEST4

AIR FLOW SENSOR → TEST5

VACUUM CONTROL OF A FIXED GEOMETRY TURBOCHARGER → TEST6

VARIABLE GEOMETRY TURBOCHARGER CONTROL → TEST7

ROTATING SECTION OF A TURBOCHARGER → TEST8

EXHAUST GAS RECIRCULATION VALVE → TEST9

POOR INJECTOR OPERATION → TEST10

INCORRECT OPERATION OF THE RAIL OVERPRESSURE VALVE → TEST11

DIESEL FUEL CONFORMITY CHECK → TEST12

GETtheMANUALS.org

TEST1	Exhaust system check

Engine stopped: Check that the silencer outlet is not blocked. Repair or replace the silencer, if necessary.

↓

Check the seal of the exhaust manifold on the contact surface between the turbocharger and the exhaust manifold.
Is the seal in order?

NO → Repair or replace the faulty part.

YES

↓

Loosen the catalytic pre-converter on the turbocharger side. Place a wooden block between the two parts.
Start the vehicle and check if the engine runs better.
Is the engine running normally?

NO → The exhaust pipe is not the cause of the fault; repeat the engine fault finding in the Customer complaints - Fault finding chart section.

YES

↓

Retighten the catalytic pre-converter.
Loosen the catalytic converter on the catalytic pre-converter side. Place a wooden block between the two parts.
Start the vehicle and check if the engine runs better.
Is the engine running normally?

NO → Replace the catalytic pre-converter.

YES

↓

(A)

GETtheMANUALS.org

TEST1 CONTINUED	

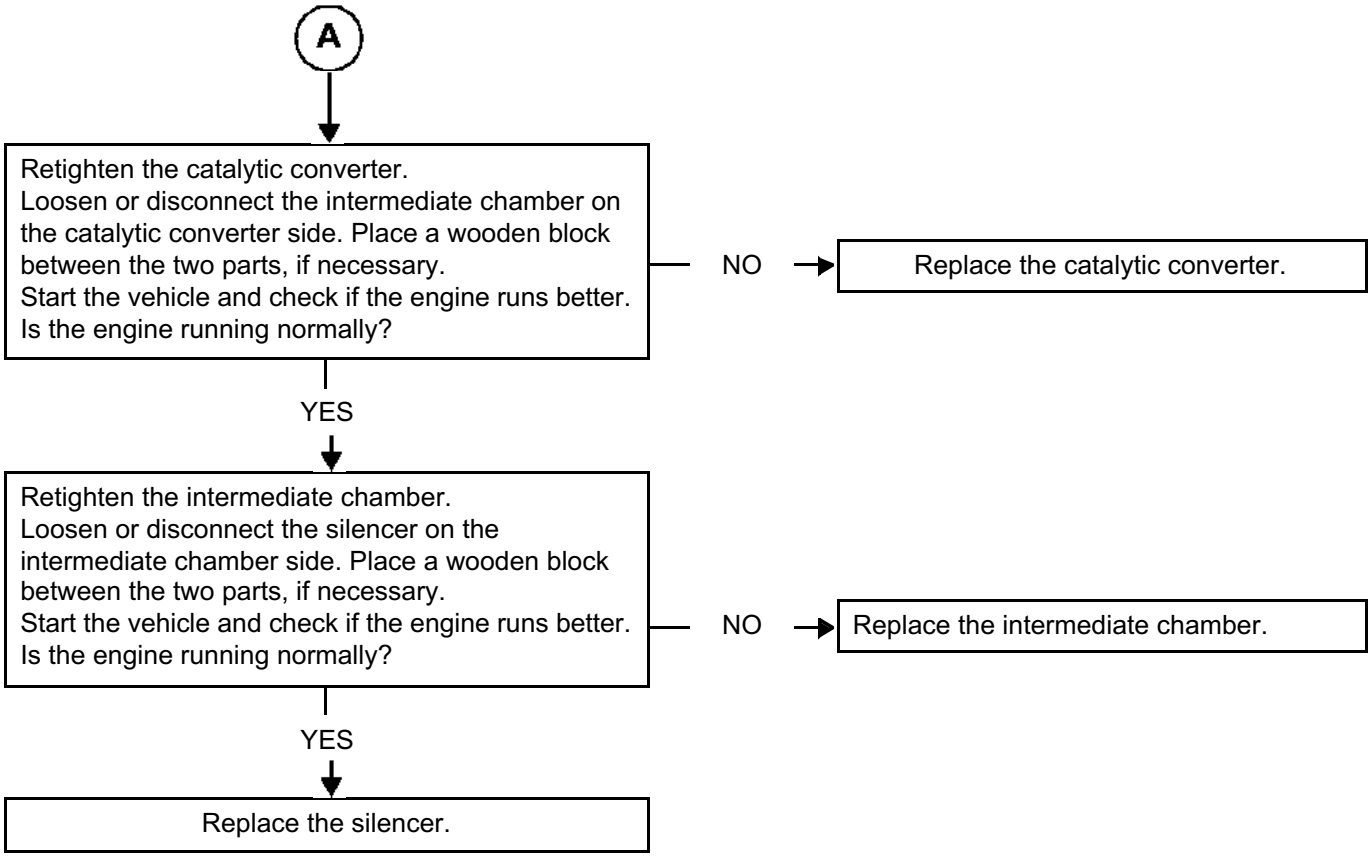

GETtheMANUALS.org

TEST2	Flushing the high pressure pump

*For **CP1 pumps only**!*
This operation is designed to flush any particles likely to jam or upset operation of the pressure regulator, into the return circuit. The particles are then trapped by the fuel filter.
Rinsing requires simultaneously pressurising the high-pressure pump feed circuit and controlling the rail pressure regulation solenoid valve.
Procedure: (refer to the **Wiring diagrams** Technical Note for the vehicle)

- With the ignition off:
- Remove the low pressure pump relay.
- On the engine fuse box and relay, shunt the power circuit of the low pressure pump relay.
- Connect the diagnostic tool and switch on the ignition.
- Establish dialogue then go to command mode.
- Run command **AC035 Fuel pressure solenoid valve 3 to 5 times**.
- Switch off the ignition.
- Remove the shunt and replace the high pressure pump relay.
- Switch on the ignition again and establish dialogue.
- Clear the low pressure pump relay fault.
- Start the engine and record the rail pressure values.

If the operation has improved the rail pressure values:
Repeat the procedure to complete the flushing operation. During the road test to follow, put your foot to the floor several times to drive out any impurities to the tank.
End of operation.
If the operation has had no effect on the rail pressure values:
Repeat (or perform) the **AC035 step 2** fault finding procedure.

GETtheMANUALS.org

TEST3	Low pressure circuit check

High pressure pump? — CP1 → B

CP3 ↓

Check the fuel filter:
- Conformity of the fuel filter (correct part number and RENAULT filter).
- Positioning and amount of clogging in the filter element.
- Positioning and condition of the seals.
- **If there is metal swarf in the filter:**
  Replace the fuel filter, bleed the circuit and **continue the fault finding procedure**.

↓

Supplying the injection system with fuel from an additional tank.
This operation aims to detect possible faults in the low pressure supply system of a vehicle by replacing it entirely with an additional tank.
Mode:
- Disconnect the diesel fuel supply pipe at the fuel filter inlet and seal it with a plug.
- On vehicles fitted with an electric priming pump (no priming bulb), remove the pump feed relay.
- Connect a pipe to the fuel filter inlet and insert the other end in a **clean** container of approximately 5 litres.
- Disconnect the diesel return pipe at the diesel temperature sensor (pump return and injector return join), and block it using a plug.
- Connect a transparent pipe at the union of the diesel temperature sensor, and insert the other end in the container.
- Fill the container with **clean** diesel fuel.
- Start the engine and let the system drain itself of its air (there must not be any air bubbles in the return pipe).

↓

Is the customer complaint still present? — YES → If the low pressure circuit is in order, reconnect the various pipes making up the low pressure circuit and repeat the fault finding procedure in the fault finding chart or for the fault that referred you to this test.

NO ↓

Are the low pressure circuit connections in order and in good condition? — NO → Carry out the necessary repairs.

YES ↓

A

GETtheMANUALS.org

TEST3 CONTINUED 1	

(A)

Check the condition and operation of the priming bulb (depending on the engine), of the priming pump (depending on the engine). Perform repairs if necessary and continue the test.

If the fault is still present with a low fuel level, check the consistency of the actual fuel level and that indicated on the instrument panel.
– The transfer pump is supplied via a venturi valve located beneath it.
Check that the opening of the venturi (**6 to 8 mm** in diameter) is not blocked by dirt contained in the fuel tank.
Check the priming of the low pressure diesel circuit.

Ensure that the correct fuel is being used.
Apply **test 12 Diesel fuel conformity check.**

Special features of the low pressure circuit on vehicles fitted with a priming pump
This pump is only activated for a few seconds when the ignition is switched on and when starting.
– Check that the pump is working during these phases.
Carry out the necessary repairs.

Low pressure circuit correct.

GETtheMANUALS.org

TEST3 CONTINUED 2	

B (CP1)

Connect a 0 - 5 bar pressure gauge to the high pressure pump inlet (using a T-piece) and read the pressure with the engine running:
Follow the cleanliness instructions carefully.

Pressure > 1.5 bar. — YES → Pressure < 2 bar. — NO → Replace the fuel filter unit.

Pressure > 1.5 bar. — NO → Connect the pressure gauge at the inlet of the filter and repeat the operation.

Pressure < 2 bar. — YES → **Low pressure circuit correct.**

Pressure > 1.5 bar. — YES → Low pressure circuit correct upstream of the filter. Check the clogging of the filter and the pipe kinked at the filter outlet.

Pressure > 1.5 bar. — NO →

Remove the pipe at the filter inlet.
Place a container here to catch the fuel.
Display the fuel flow with the ignition on:

If the fuel flow is approximately 1 litre per 30 seconds, the pump and the pipes of the circuit upstream from the pump are in order.
Otherwise, replace the fuel filter head.

C

GETtheMANUALS.org

TEST3 CONTINUED 3	

C

If the fault is still present with a low fuel level, check the consistency of the actual fuel level and that indicated on the instrument panel.
– The transfer pump is supplied via a venturi valve located beneath it.
Check that the opening of the venturi (**6 to 8 mm** in diameter) is not blocked by dirt from the fuel tank.

Ensure that the correct fuel is being used.
Apply **test 12 Diesel fuel conformity check.**
END **TEST 3**.

GETtheMANUALS.org

TEST4	Checking the turbocharged air inlet circuit

Engine stopped: Check the low and high-pressure air circuits for **leaks** (air leaks in or out, upstream or downstream of the turbocharger).

Check the parts that are abnormally greasy of the circuit and reveal a lack of tightness.
Check:
– The condition and fitting of the ducts (foreign bodies, clogged, disconnected, pinched, broken, holed, cut, tightness of the mounting bolts, etc.).
– the presence, condition and fitting of the seals.
– the present and tightening of the clamps.
– The fitting of the turbocharging pressure sensor.
Carry out the necessary repairs.

Checking the air filter.

Check:
– That the air filter unit inlet and outlet are not blocked.
– The condition and the assembly of the air filter unit (disconnected, broken, holes, etc.).
– The cleanliness, conformity and the absence of deformation of the filter element.
– The air flowmeter: apply **test 5**.
Carry out the necessary repairs.

If the engine is equipped accordingly, check:
– that the damper valve is open (**AC067 Damper valve**, step B).
– the condition of the damper valve:
– the tightness of the mounting bolts,
– cracks in the damper valve.
– that the turbulence flap is in the rest position (**AC013 Turbulence flap**, step B).
Carry out the necessary repairs.
Replace if necessary.

Check that there is no leakage on the exhaust manifold, in particular at the exhaust manifold / turbocharger interface.
Check the exhaust system: apply **test 1**.
Carry out the necessary repairs.

Check the condition of the intercooler:
– clogging,
– leaks (vehicle stationary, stabilise the engine speed between 3500 rpm and 4000 rpm and check that there are no leaks).
Replace if necessary.
END OF TEST.

GETtheMANUALS.org

TEST5	Air flowmeter

+ 12 V supply
(Refer to the **Wiring Diagrams Technical Note** for the vehicle to locate the **connections** and **connectors** concerned).

Check the **+ 12 V** supply on **track 4** of the air flowmeter.
If it is not correct, check **the continuity and absence of interference resistance** on the connection between the air flowmeter supply relay and **track 4** of the air flowmeter.
Carry out the necessary repairs.

Check the operation of the air flowmeter supply relay.
Replace the relay if necessary.
If not, check the supply to the air flowmeter supply relay.

If it does not conform, check **the continuity and absence of interference resistance** on the connections between the air flowmeter supply relay and between the fuse(s) and the battery.
Repair, if not correct.
If correct, check the fuse(s) concerned. Replace the fuse(s) if necessary.

↓

Contamination of the grilles
Visual inspection: remove the flowmeter; there should be no foreign bodies in the grilles (see illustration no. 110734 on the last page of this test).
Do not clean the grilles using compressed air or any other procedure: this damages the sensors and creates variations from the values displayed on the CLIP tool.
Check the air circuit sealing upstream of the air flow sensor: ducts and air filter unit disconnected or pierced, presence of seals.
Replace the air flowmeter if necessary and clean upstream of this, if necessary.

↓

Damage to electrical components
Visual inspection: remove the air flow sensor; components should not be broken (see diagram no. 110736 on the last page of this test).
Replace the air flowmeter if necessary.

↓

Oxidation of the electrical components
Visual inspection: remove the air flowmeter, there should not be any greenish deposits on the electrical components.
Replace the air flowmeter if necessary.

↓

Clogging of the air flowmeter
See following page.

GETtheMANUALS.org

TEST5 CONTINUED 1	

Clogging of the air flowmeter
Test:
– Check the values for conformity:
  * During the first 5 seconds after starting:
    – Coolant temperature: 80˚C.
    – Engine speed: idle speed (800 rpm for G9T 702 and F9Q 754 engines),
    – Air flow value: 59 kg/h ± 5 % for G9T 702 engines and 47 kg/h ± 5 % for F9Q 754 engines,
    – EGR valve opening cycle ratio*: 5%.
  * After the starting phase:
    – Coolant temperature: 80˚C.
    – Engine speed: idle speed (800 rpm for G9T 702 and F9Q 754 engines),
    – Air flow value: 33 kg/h ± 5 % for G9T 702 engines and 27 kg/h ± 5 % for F9Q 754 engines.
    – EGR valve opening cycle ratio*: between 35% and 45%.
– Refer to DF056 2.def, for the air flowmeter checks.
Replace the air flowmeter if necessary.

* OCR = Opening Cycle Ratio.

GETtheMANUALS.org

TEST5 CONTINUED 2	

Contamination of the grille

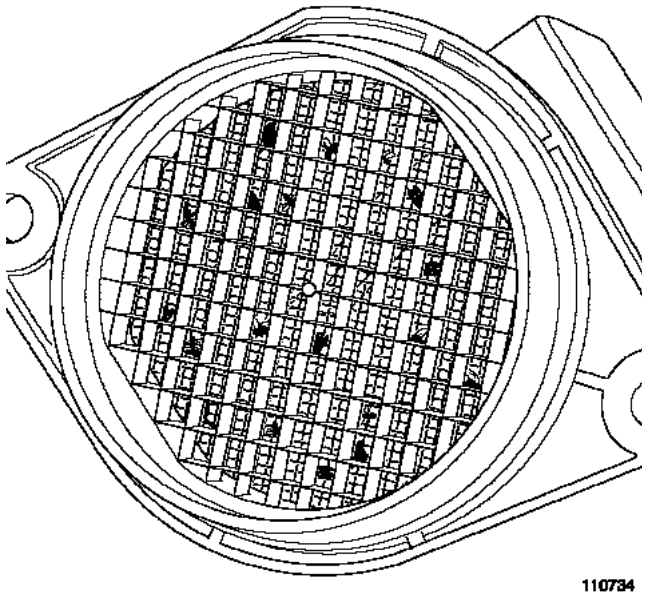

110734

Damage to the electrical sensors

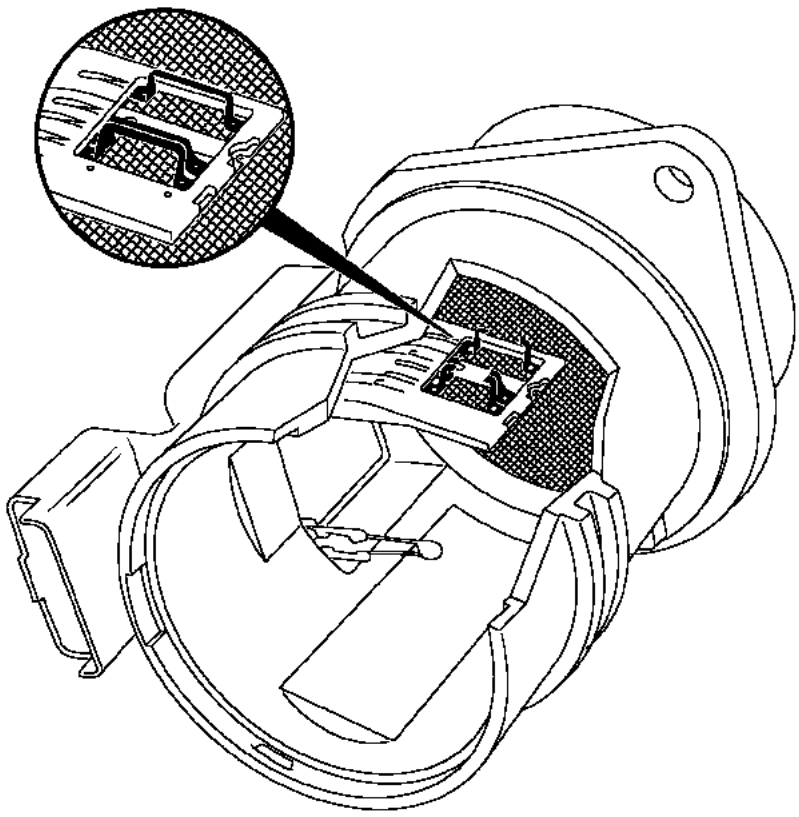

110736

GETtheMANUALS.org

TEST6	Fixed geometry turbocharger vacuum control

Engine stopped:
Check manually if the rod of the regulation valve is blocked.
Is the rod jammed?

YES → Replace the turbocharger.

NO ↓

At idle speed, turbocharging solenoid valve control: 85% OCR*, disconnect the electrical connector of the solenoid valve and check at the same time if the wastegate control rod moves.
Does the rod of the wastegate move from end to end?

YES → The turbocharging control circuit is operating normally.

NO ↓

Check the condition of the wastegate valve connectors (corrosion, bent pins, etc.).
Measure the resistance of the solenoid valve between its tracks 1 and 2. It should be:
– 15.4 Ω ± 0.7 at + 20°C for a *Pierburg* solenoid valve,
– 16.5 Ω ± 1.6 at + 20°C for a *Bitron* solenoid valve.
Is the solenoid valve in order?

NO → Replace the turbocharging solenoid valve.

YES → Check the continuity and the + 12 V and earth insulation of the connection between track L2 of connector B of the engine management computer and track 1 of the turbocharging solenoid valve connector. Check the continuity and earth insulation of the connection between the 12 V feed after the injection relay and track 2 of the turbocharging solenoid valve connector.

* OCR = Opening Cycle Ratio.

GETtheMANUALS.org

TEST6

CONTINUED

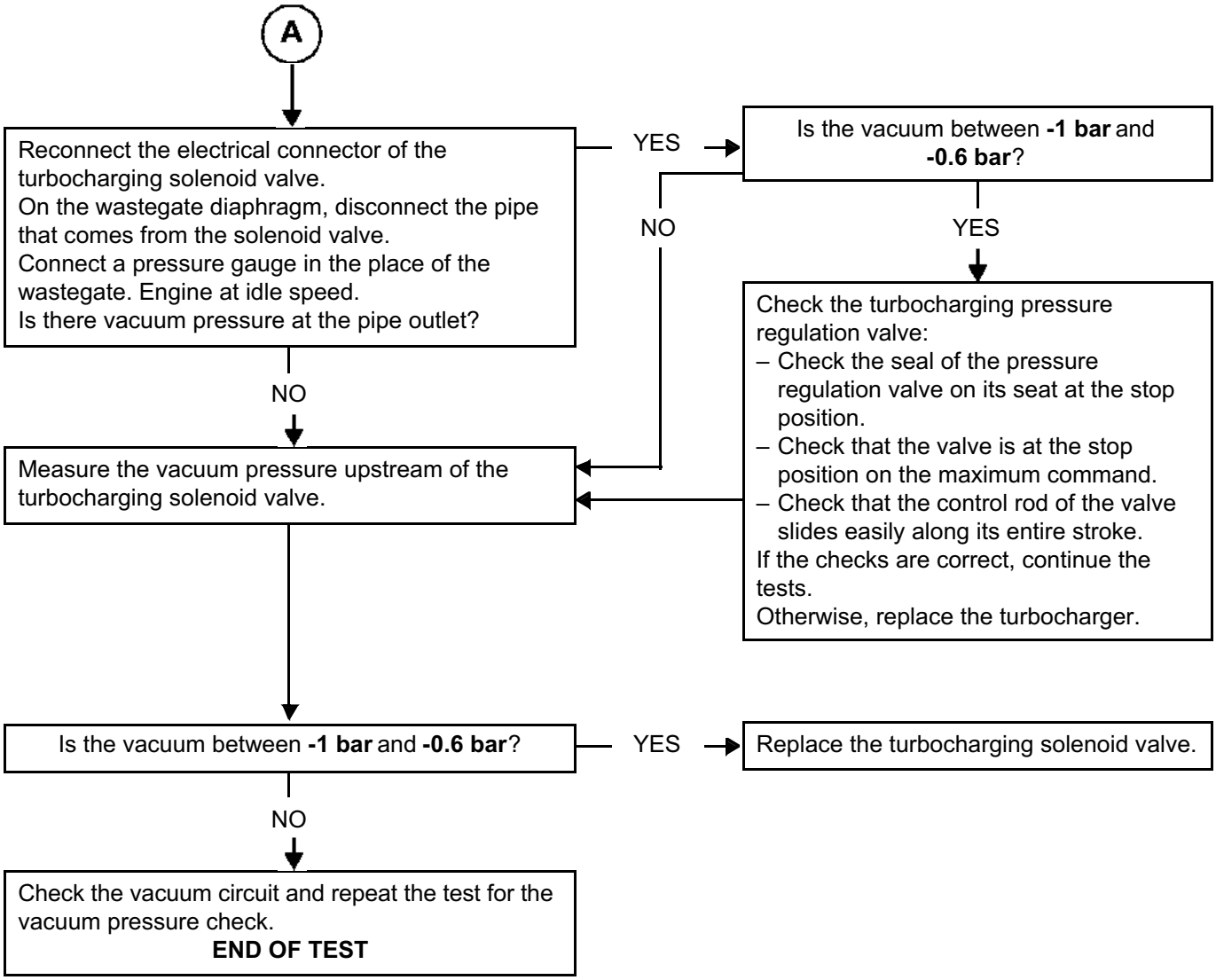

GETtheMANUALS.org

TEST7	Variable geometry turbocharger control

Engine stopped:
Check manually if the variable geometry control rod is jammed.
Is the rod jammed?

YES →
– Replace the turbocharger.
– Perform a visual inspection of the condition of the turbine and the compressor (see the illustrations of **test 8**).
If one of the 2 wheels is damaged, you should also replace the duct connected to the damaged wheel.

NO ↓

At idle speed, with turbocharging solenoid valve control: 85% OCR*, disconnect the electrical connector of the solenoid valve and check at the same time if the rod controlling the blades of the variable geometry turbocharger moves.
Does the rod move from end to end?

YES →
The turbocharging control circuit is operating normally.

NO ↓

Check the condition of the turbocharging solenoid valve connectors (corrosion, bent pins, etc.).
Measure the resistance of the turbocharging solenoid valve between its tracks 1 and 2.
It should be:
– 15.4 Ω ± 0.7 at + 20˚C for a *Pierburg* solenoid valve,
– 16.5 Ω ± 1.6 at + 20˚C for a *Bitron* solenoid valve.
Is the solenoid valve in order?

NO →
Replace the turbocharging solenoid valve.

YES →
Check the continuity and the + 12 V and earth insulation of the connection between track L2 of connector B of the engine management computer and track 1 of the turbocharging solenoid valve connector.
Check the continuity and earth insulation of the connection between the 12 V feed after the injection relay and track 2 of the turbocharging solenoid valve connector.
Repair, if necessary.

* OCR = Opening Cycle Ratio.

GETtheMANUALS.org

TEST7 CONTINUED	

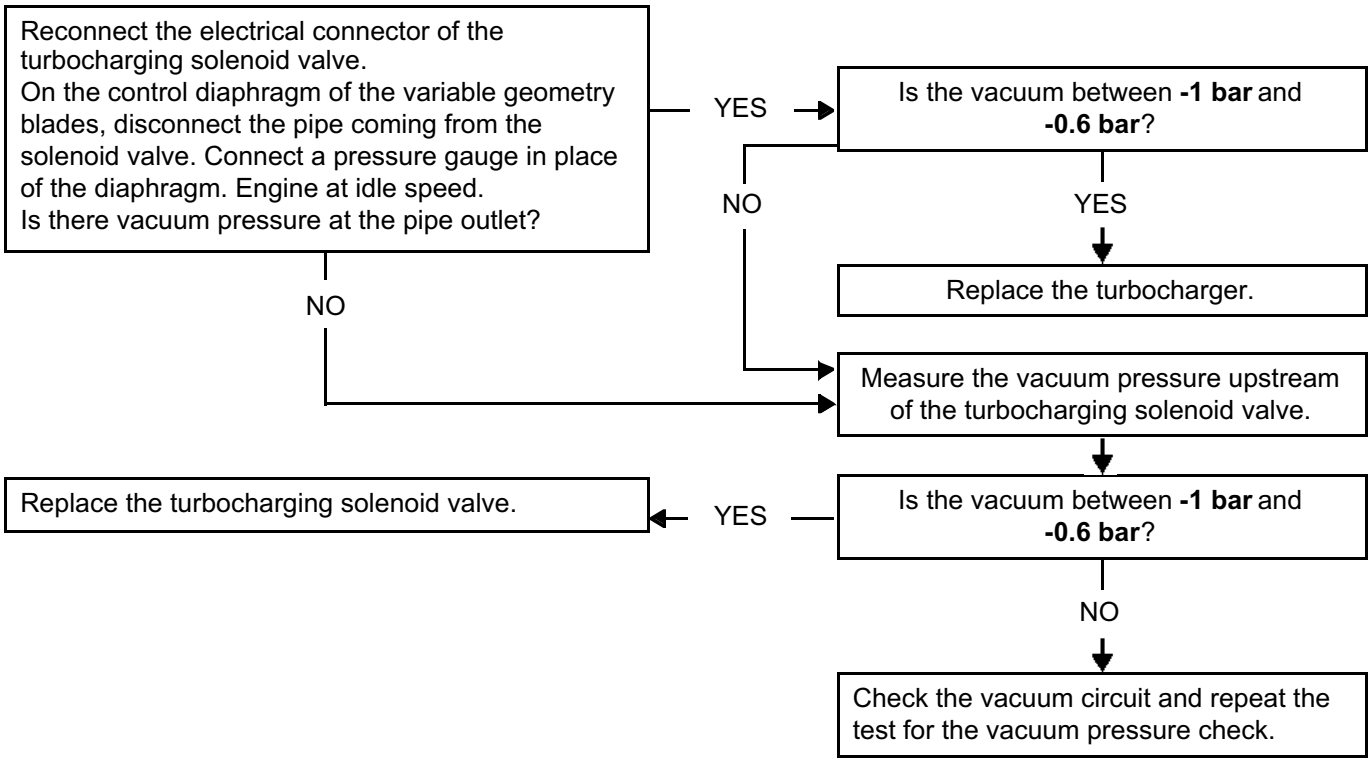

GETtheMANUALS.org

TEST8	Rotating part of a turbocharger

With the engine cold and stopped, remove the air inlet duct from the turbocharger; check manually if the shaft of the turbine and of the compressor turns. Does the shaft turn?

NO → Replace the turbocharger.

The turbocharger could be sticking due to poor lubrication of the bearings. Check for possible clogging of the lubrication circuit and the engine oil pressure.
Perform an oil change and change the oil filter.

YES

Perform a visual inspection of the condition of the wheels (see the illustrations on the next page).
Are the wheels in good condition?

NO →
– Replace the turbocharger.
– Replace the duct connected to the damaged wheel.

YES

The rotating section is in order.

The operating play of the turbocharger bearings is approximately 25 µm (micrometers or microns) between the turbocharger shaft and the internal mating face of the bearings and 75 µm between the exterior part of the bearings and the bearing housing.

Risks:

In the event of destruction of the turbocharger bearings, the steel and bronze swarf from this destruction are evacuated through the turbocharger oil to the engine's oil sump. The swarf can, consequently, be returned to the oil circuit via the oil pump, then cause widespread contamination of the engine oil circuit. This causes abnormal wear on the crankshaft bearing bushings, the con rod bearing shells and the camshafts, etc.
In the event of the compressor wheel breaking, parts of the blades may be found in the intercooler or in the air circuit ducts. The turbine wheel could easily be found in the catalytic converter.

GETtheMANUALS.org

TEST8 **CONTINUED**	

Deformed, twisted blade (“soft” foreign body)

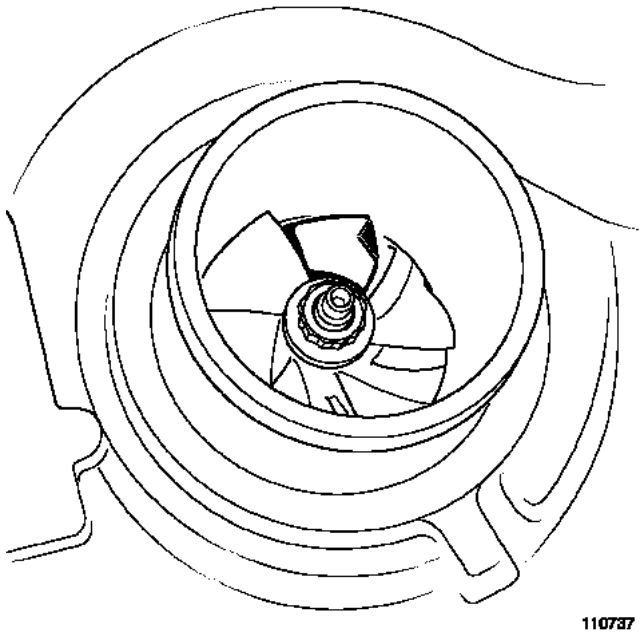

Broken blades (“hard” foreign body)

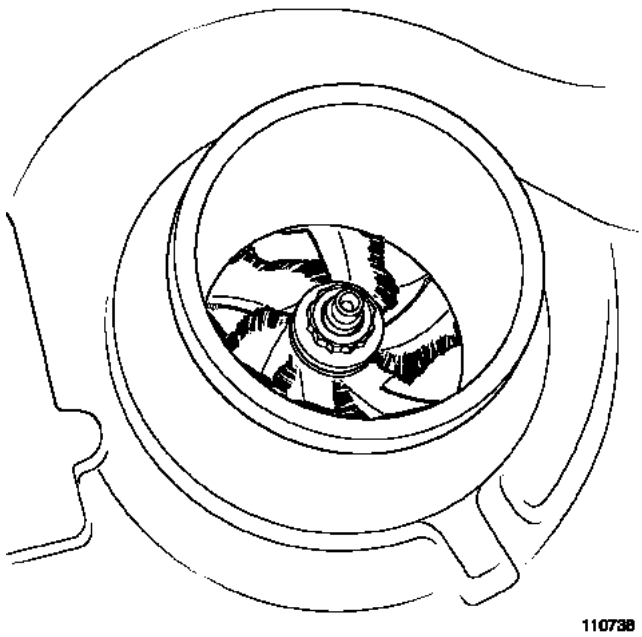

GETtheMANUALS.org

TEST9	Exhaust gas recirculation valve

PART A

Fault finding on the valve position
Or detection of a leak on the exhaust gas recirculation valve
Please observe the cleanliness guidelines and safety advice.
F9Q engine:
Clear the faults.
Use the **RZ002 "EGR adaptives"** command to try to reinitialise the operating values of the exhaust gas recirculation valve.
Switch off the ignition and wait for the engine immobiliser warning light to start flashing.
Switch the ignition back on and check for faults.
If the fault is still present:
– exit CLIP tool diagnostic mode,
– switch off the vehicle ignition,
– disconnect the exhaust gas recirculation valve connector,
– remove the exhaust gas recirculation valve using the special tool (refer to Workshop Repair Manual) and reconnect it after having removed it,
– check that no particles are blocking the movement of the exhaust gas recirculation valve flap,
– check that the exhaust gas recirculation valve is not stuck or jammed in one position,
– switch on the ignition again and return to fault finding mode using the CLIP tool,
– use the **AC036 EGR valve command with the valve removed**,
– check the movement of the valve with **PR220 EGR valve OCR*** (**0 to 2.5 mm** travel for an opening cyclic ratio of **40%** and when fully open, **~ 5 mm**, for an opening cyclic ratio of **95%**),
– check that the exhaust gas recirculation valve flap closes completely,
– if there was no displacement, or if the jamming of the exhaust gas recirculation valve cannot be solved, replace the exhaust gas recirculation valve and follow the procedure for replacing the exhaust gas recirculation valve (see **Replacement of components** section).
G9T engine:
Apply section C of this test.

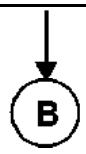

GETtheMANUALS.org

TEST9 CONTINUED 1	

PART B

Exhaust gas recirculation valve potentiometer fault finding
Use the CLIP diagnostic tool to compare **PR051 EGR valve position feedback** and the setpoint voltage or OCR* and check if there are any drops in feedback (micro-breaks).

↓

Exhaust gas recirculation valve bushing fault finding
With the engine stopped and the ignition on, record the **PR051 EGR valve position feedback**; the voltage should be less than 1.5 V.
Remove the exhaust gas recirculation valve and perform a visual inspection: the exhaust gas recirculation valve should not have a cluster of soot between the base and the flap.
Clean the exhaust gas recirculation valve bushing and replace the exhaust gas recirculation valve if necessary, and follow the procedure for replacing the exhaust gas recirculation valve (see **Replacement of components** section).

↓

* OCR = Opening Cycle Ratio.

GETtheMANUALS.org

TEST9

CONTINUED 2

PART C

– Select **DF056 Air flow sensor circuit** or **DF325 Exhaust gas recirculation function**. If none of these faults appear on the CLIP diagnostic tool, end of **test 9**.
Otherwise, display the context of the fault selected.
– Bring up **PR235 EGR position voltage after programming** in the context of the appearance of the fault (select the fault to make the appearance conditions appear).
– Is **PR235 ≥ 1.8 V**?

YES

– Activate the **AC036 EGR Valve** command 4 times.
– Display **PR051 EGR valve position feedback**.
– Is **PR051 ≥ 1.5 V**?

YES

– Replace* the pipe and the exhaust gas recirculation valve according to the procedure described in the Workshop Repair Manual.
– For the valve, follow the procedure (see **Replacement of components**).
– Follow the recommendations of the **fault finding confirmation**.

NO

– Replace* the exhaust gas recirculation pipe according to the procedure described in the Workshop Repair Manual.
– **Do not replace the EGR valve.**
– Follow the recommendations of the **fault finding confirmation**

NO

– Activate the **AC036 EGR Valve** command 4 times.
– Display **PR051 EGR valve position feedback**.
– Subtract **PR235** from **PR051**
– Is the result ≥ **0.3 V**?

YES

– Activate the **AC036 EGR Valve** command 4 times.
– Display **PR051 EGR valve position feedback**.
– Is **PR051≥ 1.5 V**?

YES

– **Do not replace the exhaust gas recirculation pipe.**
– Replace* the exhaust gas recirculation valve and follow the procedure for replacing the exhaust gas recirculation valve in the **Replacement of components** section.
– Follow the recommendations of the **fault finding confirmation**.

NO

– **Do not replace the exhaust gas recirculation pipe.**
– **Do not replace the EGR valve.**
– Check the air circuit: apply **test 4**.

*** Please observe the cleanliness guidelines and safety advice.**

GETtheMANUALS.org

TEST9 **CONTINUED 3**	

Confirmation of the fault finding:
- Start the vehicle.
- Leave the engine at idle speed for **1 min**.
- Accelerate very slowly up to **1500 rpm for 2 minutes** until the exhaust gas recirculation function becomes active.
- Carry out a vehicle test at low speed, without accelerating heavily, then normally.
- Check the faults using the CLIP diagnostic tool. If the customer complaint or the faults recur, contact the Techline.

GETtheMANUALS.org

TEST10	Incorrect injector operation

Part A: Fuel regulation balance check for each injector (individual correction):

– In the **CLIP diagnostic tool**, choose the **Fuel circuit** sub-function.
– With the engine idling and the fuel temperature **> 50˚C**, display the flow correction values of each injector (individual correction), i.e.:
  – PR364 Cylinder no. 1 fuel flow correction.
  – PR405 Cylinder no. 2 fuel flow correction.
  – PR406 Cylinder no. 3 fuel flow correction.
  – PR365 Cylinder no. 4 fuel flow correction.

The normal flow correction **value** per injector is between **- 5 mg/stroke and + 5 mg/stroke without reaching these values**.

– If this has not already been carried out, check the injector connections and wiring.
– Check the connections and wiring of the engine management computer to the injectors.
– Repair if necessary.

– Check the **IMA** injector codes, by comparing the **IMA** engraved codes on the injectors (the **IMA** codes are read from left to right) and the **IMA** codes read with the **CLIP diagnostic tool**.
– If the **IMA** codes are correct, continue the fault finding procedure.
– If not, modify the incorrect **IMA** codes using command **SC002 Enter injector codes** (see **Interpretation of commands**).

To confirm the repair, refer to part B of test 10.

CASE no. 1: If at least one of these values is greater than or equal to + 5 mg/stroke

– Check the valve clearance.
– Check the engine condition and the compressions (using **the CLIP diagnostic tool** or using a compression gauge).
– If the compression test reveals a cylinder fault, carry out the necessary repairs.
– If the compression is correct, check that the injector is correctly fitted (see **MR 402 (Vel Satis ph2), 353 (Vel Satis), 361 (Espace IV) or 339 (Laguna II), Mechanical, 13B, Diesel injection, Injector**).

Ensure that each injector has only one heat protection washer.

Check the fuel regulation again for each injector (individual correction).

– Otherwise, replace the injector and check the presence of the sealing washer. Modify the **IMA** code using command **SC002 Enter injector codes** (see **Interpretation of commands**).
– Apply **Part B** of this test to confirm the fault finding.

CASE no. 2: If at least one of these values is less than or equal to - 5 mg/stroke

– Check the valve clearance.
– Check the level and condition of the engine oil.
– Remove the injector with the largest adjustment.
– If there is contamination via the diesel, check the condition of the cylinder concerned (cylinder, piston, valves). Use an endoscope if possible.
– Only replace the removed injector, and modify the **IMA** code using command **SC002 Enter injector codes** (see **Interpretation of commands**).
– Apply **Part B** of this test to confirm the fault finding.

AFTER REPAIR	Carry out a road test followed by another check with the **diagnostic tool**.

GETtheMANUALS.org

TEST10 CONTINUED 1	

CASE no. 3: If at least one of these values does not stabilise (20 seconds after starting)
– Check the low pressure circuit with **test 4 Low pressure circuit check**.
– Ensure that the correct fuel is being used.
– Apply **test 12 Diesel fuel conformity check.**
– Apply **Part B** of this test to confirm the fault finding.

CASE no. 4: If the fuel flow correction values are all correct ones (between - 5 mg/stroke and + 5 mg/stroke)
– Apply **Part C** of this test (**Fuel return flow measurement).**

IMPORTANT
When removing and refitting the injectors, observe the cleanliness guidelines and safety advice (see **MR 402 (Vel Satis ph2), 353 (Vel Satis), 361 (Espace IV) or 339 (Laguna II), Mechanical, 13B, Diesel injection, Injector**)

Part B: Confirmation of flow correction fault finding for each injector (individual correction):
Clear the faults and perform a test with the engine idling for at least **5 minutes**, fuel temperature **> 50˚C**.

Check that there are no faults on the **Clip diagnostic tool** and that the correction values do not reach ±**5 mg/st** to confirm the repair.
If the customer complaint is still present and the fuel flow correction values are all between **-5 mg/st and +5 mg/st**, apply **Part A: Fuel regulation balance check for each injector (individual)** of this test (**CASE no. 4**).

If one or more cylinders has an injector flow correction value which reaches ±**5 mg/st**, apply **Part A Fuel regulation balance check for each injector (individual)** of this test, as one or more injectors may be defective.

Part C: Measuring fuel return flow

1 - Fitting the tool:
Only carry out this part if PRO63 Fuel temperature is greater than 50˚C (see step 2 of Part C of this test).
Remove the engine undertray
Disconnect the entire fuel return pipe in accordance with the following procedure (do not remove the clips):
– press the clip,
pull vertically on the end piece (see arrow in illustration below) of the fuel return pipe.

AFTER REPAIR	Carry out a road test followed by another check with the **diagnostic tool**.

GETtheMANUALS.org

TEST10 **CONTINUED 2**	

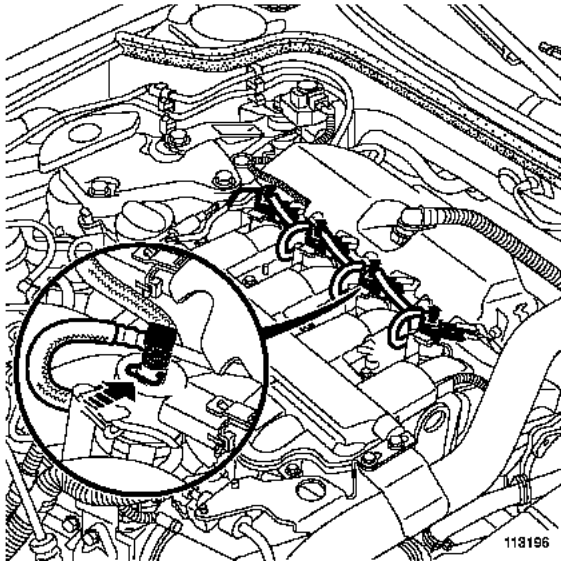

IMPORTANT
The end piece is fragile. Be careful not to break it by pulling it too hard. Replace all removed clips.

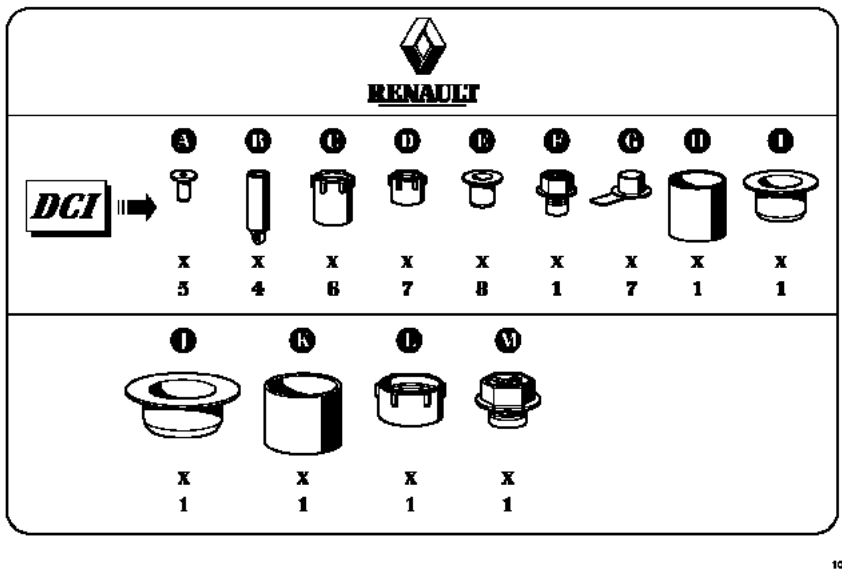

Fit the blanking plugs (**B**), from the kit **(part number 77 01 208 229)**, on the end pieces of the fuel return pipe.
If **Mot. 1760** is not fitted on the injectors immediately, place blanking plugs (**A**) on the injector fuel return openings.

AFTER REPAIR	Carry out a road test followed by another check with the **diagnostic tool**.

GETtheMANUALS.org

TEST10 **CONTINUED 3**	

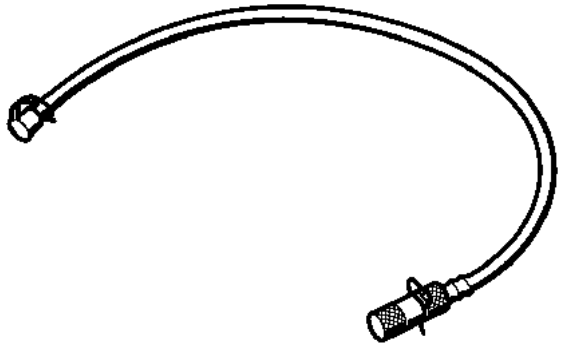

113195

On the pipes of **Mot.1760** (see illustration 113195), remove the clips and the plugs from the end pieces (on the right in the diagram) and leave the plugs (on the left in the diagram) in place.

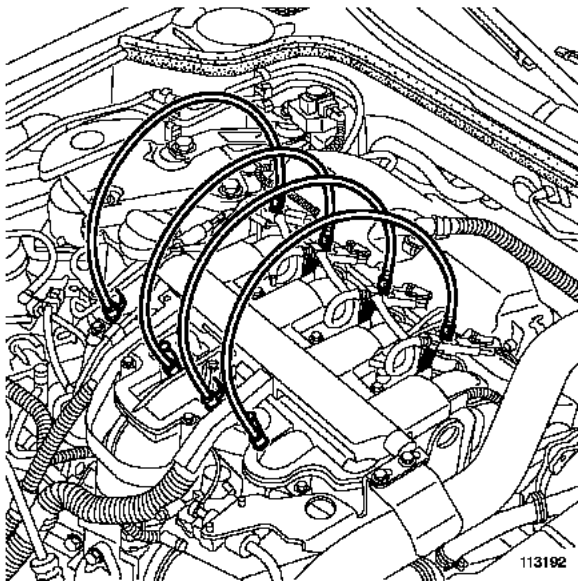

113192

Connect the pipes of tool **Mot.1760** to the injectors (without removing the clips on the injectors):
– press on the injector clip,
– insert the end piece into the injector fuel return opening.
– remember to fit the end piece plugs to the injector fuel return openings with the clips provided.
Remove the plugs left on the **Mot.1760**

AFTER REPAIR	Carry out a road test followed by another check with the **diagnostic tool**.

GETtheMANUALS.org

TEST10 **CONTINUED 4**	

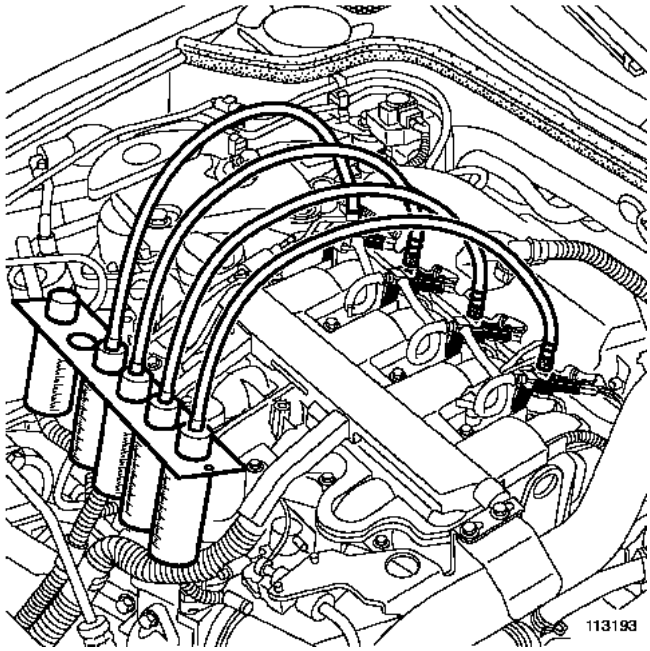

Insert the ends of the pipes into the measuring cylinders of tool **Mot.1760**. The measuring cylinders are taken from tool **Mot. 1711.**

AFTER REPAIR	Carry out a road test followed by another check with the **diagnostic tool**.

GETtheMANUALS.org

TEST10 CONTINUED 5	

2 - Check the injector return flow balance:

Does the engine start? — NO →
- Fit **Mot. 1760** as shown in the tool fitting procedure.
- Start the vehicle or perform a **15 second** starting sequence (with ignition key).
- Measure the length travelled by the diesel fuel in the pipes of the **Mot. 1760**.
- Replace the injector if the length travelled by the fuel is more than **10 cm** compared with the average of the other three injectors.

YES ↓

- The injector return pipes must be fitted to the injectors.
- Start the engine.
- Display the **Fuel circuit** sub-function in the **CLIP diagnostic tool**.
- Raise the temperature of the engine.
- Read the diesel fuel temperature with **PR063 Fuel temperature** until a diesel fuel temperature greater than **50˚C** is reached.
- Switch off the engine.
- Fit **Mot. 1760** as shown in the installation procedure (see step 1).
- Check the value of the **PR038 Rail pressure**.
- Ask another Cotech to monitor the rise in fuel in the cans during engine turnover, as one of the cans will fill up quickly if one of the injectors is leaking.
- Start the engine.
- Accelerate the engine until the pressure in the rail is **550 bar**:
  * if the engine speed is **less than 3000 rpm**, maintain this pressure.
  * if the engine speed is **greater than 3000 rpm**, reduce the engine speed until the rail pressure is **500 bar** and maintain this pressure.
- Maintain these conditions for **1 min**.
- Release the accelerator pedal and maintain the idle speed for **10 seconds**.
- Switch off the engine.
- Measure the quantity of fuel contained in each measuring cylinder.
- Replace the injector if the quantity of fuel is more than **50 ml**.
- Remove **Mot. 1760** as shown in the **tool** removal procedure (see step 3).

3 - Removing the tool:

IMPORTANT
Use a cleaning cloth (part number **77 11 211 707**) to absorb fuel run-off.

Disconnect the pipe from an injector:
- press on the injector clip,
- pull vertically on the end piece of the pipe of tool **Mot.1760**, placing a wipe on the end piece to prevent run-off.

Lift the end piece vertically so that the fuel contained in the pipes flows into the measuring cylinders of tool **Mot.1760**.

Remove the other 3 pipes using the same procedure.

AFTER REPAIR	Carry out a road test followed by another check with the **diagnostic tool**.

GETtheMANUALS.org

TEST10 **CONTINUED 6**	

Remove the plug welds from the fuel return pipe end pieces.

Connect the complete fuel return pipe to the injectors.

Wipe up any fuel run-off with a cleaning cloth (part number **77 11 211 707**).

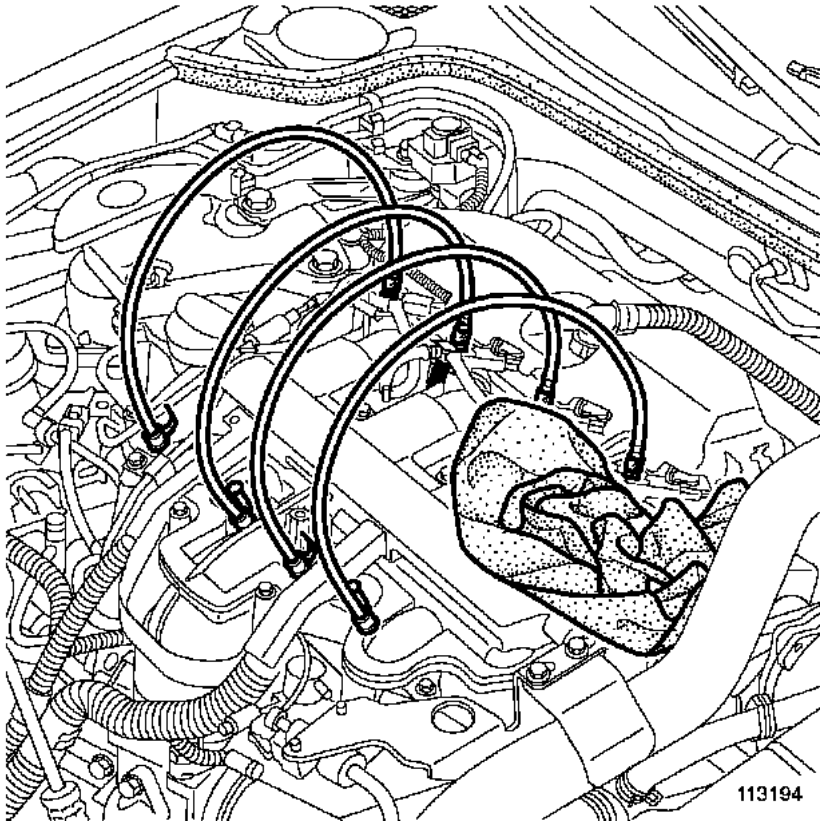

End of test 10.

AFTER REPAIR	Carry out a road test followed by another check with the **diagnostic tool**.

GETtheMANUALS.org

TEST11	Incorrect operation of the rail overpressure valve

1) Overpressure valve return flow test:

Is the engine working?

YES

NO

– Fit the tool **Mot. 1760** as shown in the tool fitting procedure (see section 2).
– Perform a **15-second** starting sequence (with ignition key).
– Measure the length travelled by the diesel fuel in the pipes of **Mot. 1760**.
– Replace the overpressure valve if the diesel length travelled is greater than **10 cm**.

– Start the engine.
– Set the **diagnostic tool** to parameter reading mode.
– Raise the temperature of the engine.
– Read the diesel temperature using parameter **PR063 Fuel temperature**:
  * if the temperature varies rapidly: increase the fuel temperature to more than **50˚C**,
  * if the temperature does not vary on the diagnostic tool display or varies too slowly: carry out a road test (driving) for **15 minutes.**
– Switch off the engine.
– Fit the tool **Mot. 1760** as shown in the installation procedure (see section 2).
– Put the diagnostic tool in parameter reading mode and check **PR038 Rail pressure.**
– Ask another Cotech to monitor the rise in diesel fuel in the can during engine turnover, as the can will fill up quickly if the overpressure valve is leaking.
– Start the engine.
– Accelerate the engine until the pressure in the rail is **550 bar**:
  * if the engine speed is less than **3000 rpm**, maintain this pressure.
  * if the engine speed is greater than **3000 rpm**, reduce the engine speed until the rail pressure is **500 bar** and maintain this pressure.
– Maintain these conditions for **1 min**.
– Release the accelerator pedal and maintain the idle speed for **10 seconds**.
– Switch off the engine.
– Measure the quantity of fuel contained in the measuring cylinder.
– Replace the injector rail if the quantity of diesel fuel is greater than **5 ml**.
– Remove the tool **Mot. 1760** as shown in the tool removal procedure (see section 3).

GETtheMANUALS.org

TEST11 CONTINUED 1	

2) Fitting the tool

Remove the engine undertray.

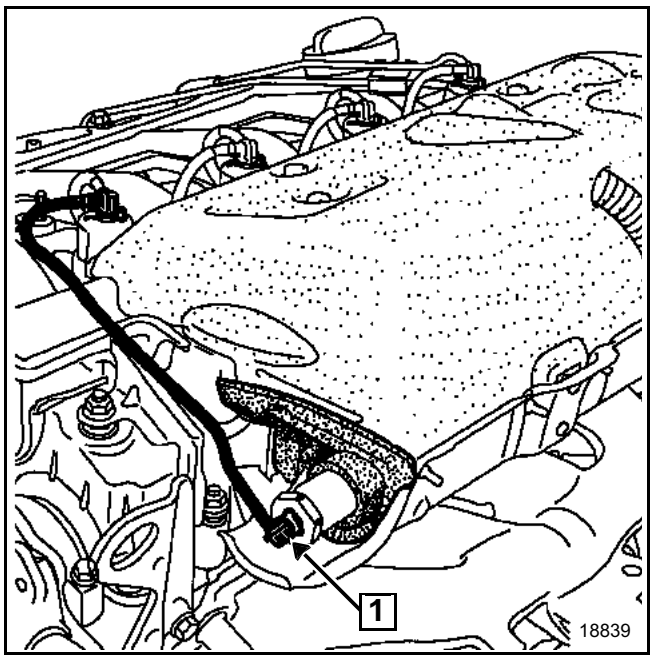

Disconnect the return pipe from the rail overpressure valve according to the following procedure (do not remove the clips):
– press the clip,
– pull horizontally on the end piece (1) of the fuel return pipe.

IMPORTANT
The end piece is fragile. Be careful not to break it by pulling it too hard. Replace all removed clips.

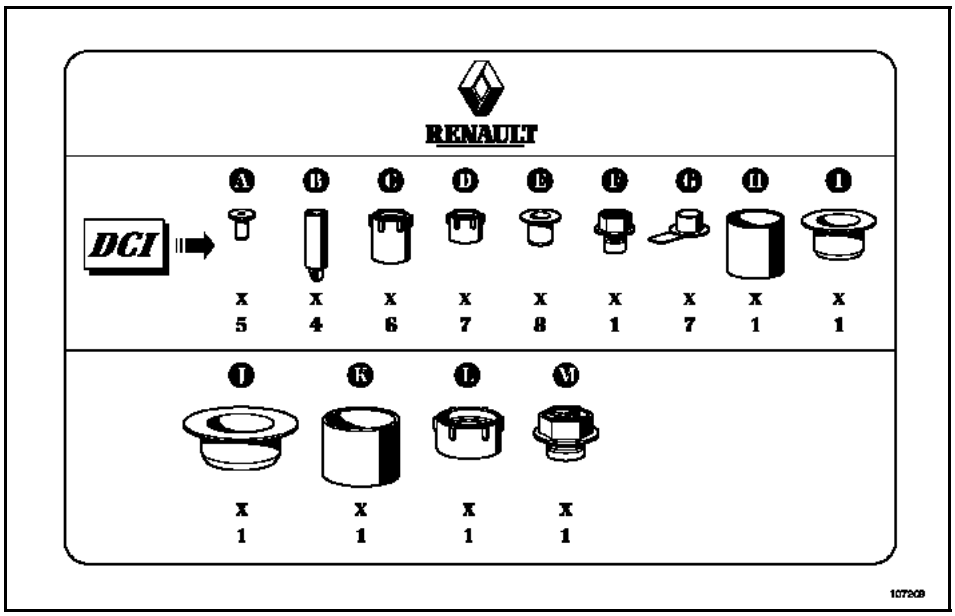

Fit the blanking plugs (**B**), from the kit **(part number 77 01 208 229)**, on the end pieces of the fuel return pipe.
If **Mot.1760** is not fitted immediately on the rail overpressure valve, place a blanking plug (**A**) on the fuel return opening of the rail overpressure valve.

GETtheMANUALS.org

TEST11 CONTINUED 2	

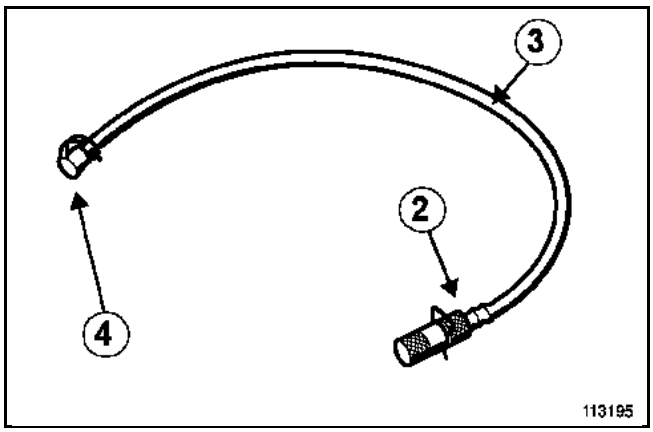

Remove the clip and the plug from the end piece (2) of the pipe (3) of tool **Mot. 1760,** leave the plug (4) in place.

Connect the pipe (3) to the rail overpressure valve (without removing the clip on the overpressure valve):
– press down on the clip (1) of the overpressure valve,
– insert the end piece (2) in the overpressure valve fuel return opening.
– do not forget to fit the end piece plug (2) to the overpressure valve fuel return opening using the clip supplied.

Remove the plug (4).

Insert the end of the pipe in the measuring cylinder of the tool **Mot. 1760**, the measuring cylinder is retrieved from the tool **Mot. 1711.**

Measure the return flow (see procedure in section 1 of the overpressure valve return flow test).

3) Removing the tool

IMPORTANT
Use a cleaning cloth (part number **77 11 211 707**) to absorb fuel run-off.

Disconnect the pipe (3) from the overpressure valve:
– press down on the clip (1) of the overpressure valve,
– pull horizontally on the end piece (2) of the pipe (3) of tool **Mot. 1760** while putting a cloth on the end piece (2) to avoid the drips.

Lift the end piece (2) vertically so that the fuel contained in the pipes flows into the measuring cylinder of the tool **Mot. 1760**.

Remove the plug from the fuel return pipe end piece (2).

Connect the complete fuel return pipe to the overpressure valve.

Wipe up any fuel run-off with a cleaning cloth (part number **77 11 211 707**).

GETtheMANUALS.org

TEST12	Diesel fuel conformity check

WARNING
During this operation, it is essential to:
– refrain from smoking or bringing incandescent objects close to the work area,
– protect yourself against fuel splashes due to residual pressure in the pipes,
– wear safety goggles with side guards,
– wear leaktight gloves (Nitrile type).

IMPORTANT
– To avoid any corrosion or damage, protect the areas on which fuel is likely to run.
– To prevent impurities from entering the circuit, place protective plugs on all fuel circuit components exposed to the open air.

Preparations:
Weigh an empty **1300 ml** plastic cup **(part no. 77 11 171 413)** with its cover **(part no. 77 11 171 416)** using electronic scales similar to those used in body paint workshops (example: **PANDA part no. 77 11 224 995**). Record the weight of the empty plastic cup.
This type of plastic cup is used to prepare paint.

Take a **1 l** fuel sample from the **diesel filter outlet** (see **MR 341, 364, 355 or 404, Mechanical, 19C, Tank, Fuel tank: Draining**) using a pneumatic transfer pump (**part no. 634-200**), and place it in the **1300 ml** plastic cup. Cover the plastic cup with its cover and let the fuel settle for approximately **2 minutes**.

Is the fuel cloudy or does it separate into two parts?

YES → The diesel fuel contains water and is not compliant.
Drain the fuel circuit, including the tank (see **MR 341, 364, 355 or 404, Mechanical, 19C, Tank, Fuel tank: Draining**).

NO → A

GETtheMANUALS.org

TEST12 CONTINUED 1	

A

Weigh the diesel fuel and note the fuel weight after subtracting the weight of the empty plastic cup and its cover.
Does the fuel weight fall between the minimum and maximum weights given in the table below?

Calculated weight (g.)		Fuel temperature (˚C)
Min. weight	Max. weight	
821	846	13
821	846	14
820	845	15
819	844	16
819	844	17
818	843	18
817	842	19
816	841	20
816	841	21
815	840	22
814	839	23
814	839	24
813	838	25

Check the fuel temperature by immersing a thermometer in the plastic cup.

YES → B

NO → C

GETtheMANUALS.org

TEST12 CONTINUED 2	

B
YES

End of test.

C
NO

The fuel is not correct.
If the fuel weight is less than the minimum value then there is petrol in the diesel fuel.
If the fuel weight is greater than the maximum value then there is oil in the diesel fuel.
Drain the fuel circuit, including the tank (see **MR 341, 364, 355 or 404, Mechanical, 19C, Tank, Fuel tank: Draining**).

Note:
If the measured weight reaches the limit values, the measurement can be performed with a **2230 ml** plastic cup (**part no. 77 11 171 414**) and its cover (**part no. 77 11 171 417**):
– Carry out a quick test drive in order to mix the fuel, then remove **2 l** of fuel.
– Perform the test again and check the results by multiplying the limit values by 2.

Contact the Techline if you have doubts or problems with the customer.

GETtheMANUALS.org

Injection computer	128-track
Injector	**0.33 Ω** at + **20˚C** / **2 Ω** max
Flow regulator (high pressure pump)	**R = 3 Ω** at + **20˚C**
Engine speed sensor	**R = 235 Ω ± 35** at + **23˚C** (on G9)
Engine speed sensor	**R = 800 Ω ± 80** at + **20˚C** (on F9)
Camshaft sensor	Hall effect sensor
Rail pressure sensor	Bolted onto rail
Pressure limiter (on pump CP3)	Start of opening ~ **1450 bar**, maximum opening at **1650 bar** (bolted onto rail)
Turbocharging pressure relief solenoid valve	**15.4 Ω ± 0.7** at + **20˚C** (PIERBURG type) **16.5 Ω ± 1.6** at + **25˚C** (BITRON type)
Swirl flap solenoid valve	**46 Ω ± 3** at + **25˚C**
Damper valve solenoid valve	**46 Ω ± 3** at + **25˚C**
Accelerator pedal sensor	R gang 1 = **1200 Ω ± 480** R gang 2 = **1700 Ω ± 680**
Air temperature sensor	**R = 3714 Ω ± 161** at + **10˚C** / **2448 Ω ± 90** at + **20˚C** / **1671 Ω ± 59** at + **30˚C**
Diesel fuel temperature sensor	**R = 3820 Ω ± 282** at + **10˚C** / **2050 Ω ± 100** at + **25˚C** / **810 Ω ± 47** at + **50˚C**
Engine coolant temperature sensor	**R = 2252 Ω ± 112** at **25˚C** / **811 Ω ± 39** at **50˚C** / **283 Ω ± 8 at 80˚C**
Air flowmeter	Track 1: air temperature signal Track 2: - flowmeter Track 3: **+ 5 V** flowmeter Track 4: **+ 12 V** battery Track 5: air flow signal Track 6: **earth**
Exhaust gas recirculation valve (Pierburg)	R between tracks 1 and 5 (coil) = **8 Ω ± 0.5** at + **20˚C** R between tracks 2 and 4: **2400 Ω** at **5600 Ω**, at + **20˚C** R between tracks 2 and 6: **1900 Ω** at **6400 Ω**, at + **20˚C** R between tracks 4 and 6: **800 Ω** at **3800 Ω**, at + **20˚C**
Exhaust gas recirculation valve (Cooper)	R between tracks 1 and 5 (coil) = **8 Ω ± 0.5** at + **20˚C**
Heater plug	**R = 0.4 Ω** to **0.9 Ω** Maximum current drawn: **28 A** at **0 sec / 12 A** at **10 sec / 7 A** after **30 seconds**
Thermoplungers	**R = 0.45 Ω ± 0.05** at + **20˚C**

(R = Resistance)

GETtheMANUALS.org

VEL SATIS

1 Engine and peripherals

13B DIESEL INJECTION

EDC16CP33
Program No.: C4
Vdiag No.: 04, 08, 18, 1C, 20, 24, 26, 28, 34, 38, 44, 4C, 54, 58, 5C, 60, 62, 74

Fault finding – Introduction	13B - 2
Fault finding – Cleanliness guidelines	13B - 8
Fault finding – System operation	13B - 11
Fault finding – Configurations	13B - 21
Fault finding – Replacement of components	13B - 22
Fault finding – Fault summary table	13B - 28
Fault finding – Interpretation of faults	13B - 31
Fault finding – Conformity check	13B - 261
Fault finding – Status summary table	13B - 262
Fault finding – Interpretation of statuses	13B - 264
Fault finding – Parameter summary table	13B - 325
Fault finding – Interpretation of parameters	13B - 330
Fault finding – Command summary table	13B - 422
Fault finding – Interpretation of commands	13B - 423
Fault finding – Customer complaints	13B - 469
Fault finding – Fault Finding Chart	13B - 470
Fault finding – Test	13B - 492

V11 **Edition Anglaise**

"The repair procedures given by the manufacturer in this document are based on the technical specifications current when it was prepared.

The procedures may be modified as a result of changes introduced by the manufacturer in the production of the various component units and accessories from which his vehicles are constructed."

All rights reserved by Renault s.a.s.

Copying or translating, in part or in full, of this document or use of the service part reference numbering system is forbidden without the prior written authority of Renault s.a.s.

© Renault s.a.s. 2012

GETtheMANUALS.org

1. SCOPE OF THIS DOCUMENT

This document presents the fault finding procedure applicable to all computers with the following specifications:

Vehicle(s): **Laguna II Phase 2 / Vel Satis Phase 2 / Espace IV Phase 2 / Mégane II phase 2 / Scénic II phase 2**

Engine: **M9R 700 – 721 – 722 – 724 –740 – 750 – 760 – 761 – 762 – 763**

Function concerned: **Bosch Diesel Injection**

Computer name: **BOSCH EDC16CP33**

Program No.: **C4**

Vdiag No.: **04, 08, 18, 1C, 20, 24, 26, 28, 34, 38, 44, 4C, 54, 58, 5C, 60, 62, 74**

2. PREREQUISITES FOR FAULT FINDING

Documentation type

Fault finding procedures (this document):

– Assisted fault finding (integrated into the diagnostic tool), Dialogys.

Wiring Diagrams:

– Visu-Schéma.

Type of diagnostic tools

– CLIP

Special tooling required

Special tooling required	
Diagnostic tool	
	Multimeter
Elé. 1681	**Universal bornier**

3. REMINDERS

Procedure

To save energy, the UCH of the vehicle interrupts the **+ after ignition feed** after **3 minutes**.

To run fault finding on a computer, it is possible to force the **+ after ignition feed** for **1 hour** by applying the following procedure:

– Press the card unlocking button,
– insert the card in the reader,
– press the start button (interrupting the timed **+ after ignition feed** mode),
– press the start button for more than **5 seconds**, until the immobiliser warning light flashes rapidly (4 Hz).

This forced **+ after ignition feed** mode remains active for **1 hour**.

Pressing the start button or removing the card from the card reader interrupts the forced **+ after ignition feed**, but does not interrupt the timed forced **+ after ignition feed** mode. As long as one hour has not elapsed, activating the **+ after ignition feed** will restart **forced + after ignition feed** for the remaining time.

GETtheMANUALS.org

Faults

Faults are declared present or stored (depending on whether they appeared in a certain context and have disappeared since, or whether they remain present but are not diagnosed within the current context).

The **present** or **stored** status of faults should be taken into consideration when the **diagnostic tool** is switched on following + after ignition feed is activated (no system components active).

For a **present fault**, apply the procedure described in the **Interpretation of faults** section.

For a **stored fault**, note the faults displayed and apply the **Notes** section.

If the fault is **confirmed** when the instructions are applied, the fault is present. Deal with the fault.

If the fault is **not confirmed**, check:
– the electrical lines which correspond to the fault,
– the connectors on these lines (corrosion, bent pins, etc.),
– the resistance of the faulty component,
– the condition of the wires (melted or cut insulation, wear).

WARNING:
Deal first with instrument panel faults (eg. "Particle filter" warning light).
Then carry out scheduled maintenance on the vehicle.

Conformity check

The purpose of the conformity check is to check data that does not produce a fault on the **diagnostic tool** if the data is inconsistent. Therefore, this stage is used to:
– carry out fault finding on faults that do not have a fault display, and which may correspond to a customer complaint.
– check that the system is operating correctly and that there is no risk of a fault recurring after repair.

The conformity check is a fault finding procedure carried out using the interpretation of statuses and parameters.

If a status does not function normally or a parameter is outside the permitted tolerance values, consult the corresponding fault finding pages (see interpretation of statuses and parameters).

Customer complaints - Fault finding chart

If the test with the **diagnostic tool** is correct but the customer complaint is still present, the fault should be dealt with by **customer complaints**.

A synopsis of the general procedure to follow is provided on the following page in the form of a flow chart.

GETtheMANUALS.org

4. FAULT FINDING PROCEDURE

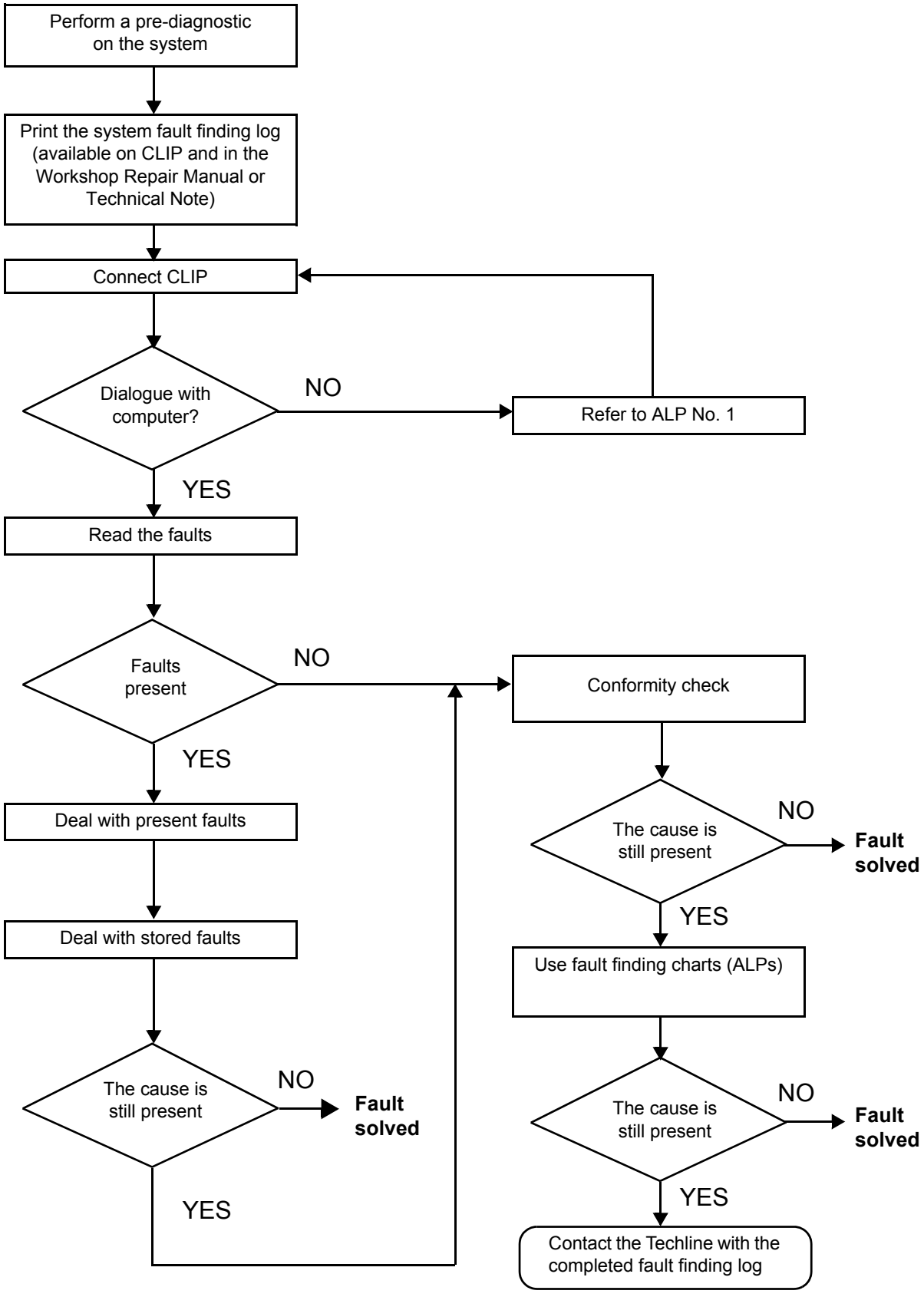

GETtheMANUALS.org

4. FAULT FINDING PROCEDURE (continued)

4.1 Wiring check

Fault finding problems
Disconnecting the connectors and/or manipulating the wiring may temporarily clear the cause of a fault.
Electrical measurements of voltage, resistance and insulation are generally correct, especially if the fault is not present when the analysis is made (stored fault).

Visual inspection
Look for damage under the bonnet and in the passenger compartment.
Carefully check the fuses, insulators and wiring harness routing.
Look for signs of oxidation.

Physical inspection
When handling the wiring, use the **diagnostic tool** to detect any change in the status of the fault from **stored** to **present**.
Make sure that the connectors are firmly secured.
Apply light pressure to the connectors.
Twist the wiring harness.
If there is a change in status, try to locate the source of the fault.

Inspection of each component
Disconnect the connectors and check the appearance of the clips and tabs, as well as the crimping (no crimping on the insulating section).
Make sure that the clips and tabs are properly locked in the sockets.
Check that the clips or tabs have not been bent back during connection.
Check the clip contact pressure using an appropriate model of tab.

Resistance check
Check the continuity of entire lines, then section by section.
Look for a short circuit to earth, to **+ 12 V** or with another wire.

If a fault is detected, repair or replace the wiring harness.

GETtheMANUALS.org

4.2 Connector check

Note:
Carry out each requested check visually. Do not remove a connector if it is not required.

Note:
The check is carried out on the 2 parts of the connection. There may be 2 types of connections:
– Connector/Connector.
– Connector/Device.

1. Visual inspection of the connection:
– Check that the connector is connected correctly and that the male and female parts of the connection are correctly coupled.

2. Visual inspection of the area around the connection:
– Check the condition of the mounting (pin, strap, adhesive tape, etc.) if the connectors are attached to the vehicle.
– Check that there is no damage to the wiring trim (sheath, foam, adhesive tape, etc.) near the wiring.
– Check that there is no damage to the electrical wires at the connector outputs, in particular on the insulating material (wear, cuts, burns, etc.).

Disconnect the connector to continue the checks.

3. Visual inspection of the plastic casing:
– Check that there is no mechanical damage (casing crushed, cracked, broken, etc.), in particular to the fragile components (lever, lock, terminal locations, etc.).
– Check that there is no heat damage (casing melted, blackened, deformed, etc.).
– Check that there are is no dirt (grease, mud, liquid, etc.).

4. visual inspection of the metal contacts:
(*The female contact is called CLIP. The male contact is called TAB*).
– Check that there are no bent contacts (the contact is not inserted correctly and can come out of the back of the connector). The spring contact of the connector when the wire is pulled slightly.
– Check that there is no damage (tabs bent, clips open too wide, blackened or melted, etc.).
– Check that there is no oxidation on the metal contacts.

Visual inspection of the sealing:
(*Only for watertight connectors*)
– Check for the seal on the connection (between the 2 parts of the connection).
– Check the seal at the back of the connectors:
– For unit joints (1 for each wire), check that the unit joints are present on each electrical wire and that they are correctly positioned in the opening (level with the housing). Check that plugs are present on openings which are not used.
– For a grommet seal (one seal which covers the entire internal surface of the connector), check that the seal is present.
– For gel seals, check for gel in all of the openings without removing the excess or any protruding sections (it does not matter if there is gel on the contacts).
– For hotmelt sealing (heat-shrink sleeve with adhesive), check that the sleeve has shrunk correctly on the back of the connectors and electrical wires, and that the hardened adhesive is evident from the wire ends.
– Check that there is no damage to any of the seals (cuts, burns, significant deformation, etc.).

If a fault is detected, consult **Technical Note 6015A, Repairing electrical wiring**.

GETtheMANUALS.org

5. FAULT FINDING LOG

IMPORTANT

IMPORTANT
All faults involving a complex system call for thorough diagnostics with the appropriate tools. The FAULT FINDING LOG, which should be completed during the fault finding procedure, ensures a record is kept of the procedure carried out. It is an essential document when consulting the manufacturer.

IT IS THEREFORE ESSENTIAL THAT THE FAULT FINDING LOG IS FILLED OUT EVERY TIME IT IS REQUESTED BY TECHLINE OR THE WARRANTY RETURNS DEPARTMENT.

You will always be asked for this log:
- when requesting technical assistance from the Techline,
- when requesting approval before replacing parts for which approval is compulsory,
- to be attached to monitored parts for which reimbursement is requested. The log is needed for warranty reimbursement, and enables better analysis of the parts removed.

6. SAFETY INSTRUCTIONS

Safety rules must be observed during any work on a component to prevent any material damage or personal injury:
– check the battery voltage to avoid incorrect operation of computer functions,
– use the proper tools.

GETtheMANUALS.org

I - HAZARDS ASSOCIATED WITH CONTAMINATION

The high pressure direct injection system is highly sensitive to contamination. The risks caused by the introduction of contamination are:
– damage to or destruction of the high pressure injection system,
– a component seizing up,
– a component losing its sealing.

All After-Sales operations must be performed under very clean conditions. This means that no impurities (particles a few microns in size) should have penetrated the system during dismantling.

The cleanliness guidelines must be applied from the filter through to the injectors.

What are the sources of contamination?

– metal or plastic swarf,
– paint,
– fibres:
  – from cardboard,
  – from brushes,
  – from paper,
  – from clothing,
  – from cloths,
– foreign bodies such as hair,
– the ambient atmosphere
– etc.

IMPORTANT:
Cleaning the engine using a high pressure washer is prohibited because of the risk of damaging connections. In addition, moisture may collect in the connectors and create faults in the electrical connections.

GETtheMANUALS.org

II - INSTRUCTIONS TO BE FOLLOWED PRIOR TO ALL OPERATIONS

IMPORTANT:
Before carrying out any work on the high pressure injection system, protect:
– the accessories and timing belts,
– the electrical accessories, (starter, alternator, electric power-assisted steering pump),
– the flywheel surface, to prevent any diesel from running onto the clutch friction plate,
– timing chain.

Check that you have plugs for the unions to be opened (set of plugs available from the Parts Department). The plugs are single-use only. After use, they must be discarded (once used they are soiled and cleaning is not sufficient to make them reusable). Unused plugs must be discarded.

Check that you have hermetically resealable plastic bags for storing removed parts. Parts stored in this way will be less susceptible to the risk of contamination. The bags are to be used once only, and discarded after use.

Use lint-free cleaning cloths (cloth part reference **77 11 211 707**). Using normal cloth or paper is prohibited. They are not lint-free and could contaminate the fuel circuit. A lint-free cloth should only be used once.

Use fresh cleaning agent for each operation (used cleaning agent is contaminated). Pour it into a clean receptacle.

For each operation, use a clean brush in good condition (the brush must not shed its bristles).

Use a brush and cleaning agent to clean the unions to be opened.

Blow compressed air over the cleaned parts (tools, workbench, the parts, unions and injection system zones). Check that no bristles are left.

Wash your hands before and during the operation if necessary.

When wearing leather protective gloves cover them with latex gloves to prevent contamination.

GETtheMANUALS.org

III - INSTRUCTIONS TO BE FOLLOWED DURING THE OPERATION

As soon as the circuit is open, all openings must be plugged to prevent impurities from entering the system. The plugs to be used are available from the Parts Department. The plugs must not be reused under any circumstances.

Seal the pouch shut, even if it has to be opened shortly afterwards. The ambient atmosphere carries contamination.

All components removed from the injection system must be stored in a hermetically-sealed plastic bag once the plugs have been inserted.

Using a brush, cleaning agent, air gun, brush or normal cloth is strictly prohibited once the circuit has been opened. These items could allow contamination to enter the system.

A new component replacing an old one must not be removed from its packaging until it is to be fitted to the vehicle.

GETtheMANUALS.org

System outline

The high pressure injection system is designed to deliver a precise quantity of diesel fuel to the engine at a set moment.
It is fitted with a **BOSCH** computer, type **EDC16CP33**.
The system comprises:
– a priming bulb,
– a diesel filter,
– a high pressure pump,
– a fuel pressure regulator (or actuator) on the high pressure pump (MPROP),
– a fuel pressure regulator (or actuator) mounted on the injector rail (DRV),
– an injector rail,
– a fuel pressure sensor,
– four piezoelectric injectors,
– a diesel temperature sensor,
– a coolant temperature sensor,
– an upstream air temperature sensor,
– a cylinder reference sensor,
– an engine speed sensor,
– a turbocharger pressure sensor,
– an exhaust gas recirculation valve,
– a recycled gas cooling solenoid valve,
– an accelerator pedal potentiometer,
– an atmospheric pressure sensor integrated into the injection computer,
– a flow sensor,
– a turbocharging limiter solenoid valve,
– a damper valve,
– a particle filter,
– a turbo upstream temperature sensor,
– a turbo upstream pressure sensor,
– a particle filter differential pressure sensor,
– a particle filter upstream temperature sensor,
– a particle filter downstream temperature sensor,
– an electric coolant pump (turbocharger),
– four thermoplungers.

The **common rail** direct high pressure injection system works sequentially (based on the petrol engine multipoint injection).

This system uses piezoelectric injectors which enable a more precise injection since opening and closing times are shorter compared to conventional solenoid injectors.
This injection system reduces operating noise, reduces the volume of pollutant gases and particles and produces high engine torque at low engine speeds thanks to a pre-injection procedure.
The high pressure pump generates the high pressure and transmits it to the injector rail. The actuator located on the pump controls the quantity of diesel supplied, according to the demand determined by the computer.

The rail supplies each injector through a steel pipe. The actuator located on the injector rail controls the pressure of diesel fuel in the rail according to the demand determined by the computer.

GETtheMANUALS.org

a. The computer:

Determines the injection pressure value necessary for the correct operation of the engine; the pressure can reach **1600 bar** in the rail and it must be constantly regulated.
Checks that the pressure value is correct by analysing the value transmitted by the pressure sensor located on the rail.
Determines the injection duration required to deliver the right quantity of diesel fuel and the moment when injection should start. Controls each injector electrically and individually after determining these two values.

The quantity of fuel injected is determined by:
– Engine speed (Crankshaft + Cam for synchronisation).
– Accelerator pedal.
– Turbocharging pressure.
– Coolant temperature,
– Inlet air temperature.
– Air flow
– Pressure in the rail.
– Vehicle speed.

The computer manages:
– idling regulation,
– exhaust gas flow reinjection to the inlet,
– fuel supply check (advance, flow and rail pressure),
– the fan assembly control,
– the air conditioning (cold loop function),
– cruise control/speed limiter function,
– pre-post heating control,
– indicator lights control via the multiplex network,
– the operation of the catalysed particle filter,
– turbocharging pressure.

The high pressure pump is supplied at low pressure by an integrated low pressure pump (transfer pump).
It supplies the rail, the pressure in which is regulated by:
– **the pressure regulator on the rail** (**DRV**) for starting phases, starting the engine when cold (increase in temperature to heat the diesel circuit) and when throttling-off,
– **the pressure regulator on the pump** (**MPROP**) for all other phases (90% of cases).

As natural leaks in piezoelectric injectors are very low, opening the pressure regulator (DRV) is the only quick method of dumping the rail pressure and it prevents overpressure when injection is restarted.

The pressure regulator on the pump (MPROP) enables the high pressure pump to supply just the exact quantity of diesel fuel required to maintain the rail pressure. This component minimises the heat generated and improves engine output.

Note:
Each piezoelectric injector is connected to the return rail. The injector return rail is kept pressurised by a mechanical valve at the end of the return rail with a **10 bar** calibration (by comparison, solenoid injectors used to return directly into the common fuel return circuit). This feature is linked to the operation of piezoelectric injectors.

GETtheMANUALS.org

Fuel surplus from the pump, injector return rail or rail is collected in a low pressure "octopus manifold" and is then sent to the fuel filter, providing that the fuel is cold (recirculation), and then to the tank.

The system can inject diesel fuel into the engine at a pressure of up to **1600 bar**. Before each operation, check that the injector rail is depressurised and that the fuel temperature is not too high.
You must respect the cleanliness guidelines and safety advice specified in this document for any work on the high pressure injection system.
Removal of the internal parts of the pump and injectors is prohibited. Only the fuel pressure regulator (or actuator) on the high pressure pump (MPROP), the fuel pressure regulator (or actuator) on the injector rail (DRV) or the diesel temperature sensor can be replaced.
For safety reasons, it is strictly prohibited to undo a high pressure pipe union when the engine is running.
It is not possible to remove the pressure sensor from the fuel rail because this may cause circuit contamination faults. If the pressure sensor fails, replace the pressure sensor, the rail and the high pressure pipes.

Some vehicles have a presence sensor mounted in the filter for detecting water in the diesel. If there is water in the diesel fuel, the orange "Injection and pre-post heating" warning light will come on.

WARNING:
The engine must not operate with:
– Diesel fuel containing more than **10%** diester,
– petrol, even in tiny quantities.

Supplying **+ 12 V** directly to any component in the system is prohibited.
Ultrasonic decoking and cleaning are prohibited.
Never start the engine unless the battery is connected correctly.
Disconnect the injection computer when carrying out any welding work on the vehicle.

Note:
For the **M9R 724** (**Vdiag 5C** and **58**):
The engine is limited to **3000 rpm** if the vehicle is stationary or if the vehicle speed is less than **4 mph** (**7 km/h**) and if the engine is warm.

b. The connections between the vehicle's various computers are multiplexed.

The electronic system fitted in this vehicle is multiplexed.
This enables dialogue between the various vehicle computers. As a result:
– the fault warning lights on the instrument panel are lit by the multiplex network,
– vehicle faults are displayed by the multiplex network,
– the vehicle speed sensor on the gearbox is not needed.

The vehicle speed signal on the instrument panel is sent by the ABS computer via the multiplex network. The vehicle speed signal is mainly used by the injection computer, the airbag computer and the automatic transmission computer (if the vehicle is fitted with this).

GETtheMANUALS.org

c. Functions hosted:

Air conditioning management assistance:

For vehicles with air conditioning, the **EDC16CP33** system provides the option of deactivating the air conditioning via the UCH, under certain conditions of use:
– when requested by the driver,
– when starting the engine,
– if the engine overheats (in order to reduce the power the engine has to supply),
– when the engine speed is kept at a very high level (to protect the compressor),
– during transition phases (e.g. under heavy acceleration when overtaking, anti-stalling and moving off strategies). These conditions are only taken into account when they do not occur repeatedly, in order to prevent system instabilities (erratic deactivations),
– when certain faults appear.

I - Cold loop air conditioning management:

The air conditioning is the cold loop type and its management shared between several computers.
The injection computer is responsible for:
– authorising requests for cold air depending on the engine coolant temperature and the engine speed,
– calculating the power absorbed by the compressor from the refrigerant pressure.
– **requesting** fan assembly actuation (**Mégane II ph2 and Scénic II ph2) and controlling** fan assembly actuation (**Laguna II, Vel Satis ph2** and **Espace IV ph2**), according to the vehicle speed, the refrigerant pressure and the engine coolant temperature.

The driver requests the air conditioning to be switched on by means of the ventilation selector coupled to a switch. The cold air request is authorised or denied depending on the pressure measured. If this pressure is outside the operating limits, the cold loop program is not activated.

The air conditioning system is authorised by the injection computer **2** to **8 seconds** after the engine is started.

Management of the thermoplungers:

To improve cold starting, the vehicle is fitted with thermoplungers. These thermoplungers are managed and controlled by the injection computer, according to the operating phases, primarily to accelerate the increase in engine coolant temperature.
The maximum number of thermoplungers that can be actuated is four and their actuation depends mainly on the coolant temperature and the air temperature.
See configuration reading **LC056 Thermoplungers: WITH or WITHOUT**.
When necessary, they are actuated by the injection system only during particle filter regeneration by means of a special unit.
The maximum number of thermoplungers that can be managed is four and their activation depends mainly on the coolant temperature (< **15°C**) and air temperature (< **5°C**).

GETtheMANUALS.org

II - Cruise control/speed limiter management:

The **cruise control function**, when activated, allows you to keep the vehicle speed at a selected value regardless of the driving conditions encountered.
Using the control buttons, the driver can increase or reduce the speed of the vehicle.

If the driver wishes to exceed the cruising speed, he may:
– press the accelerator pedal and exceed the cruising speed (the vehicle will return to the initial cruising speed once the driver takes his foot off the pedal),
– press the system control buttons.

The cruise control function can be deselected either by:
– the system control buttons,
– deactivating the cruise control switch,
– when system events are detected, such as the brake pedal or clutch being pressed,
– when system errors are detected such as an inconsistent vehicle speed.

The cruise control function can also be temporarily disabled when the driver wants to increase the speed by depressing the accelerator pedal. The cruising speed is resumed when the driver releases the accelerator pedal. The vehicle will then attempt to reach the cruising speed at a controlled acceleration rate.

It is possible to reactivate the vehicle speed control and resume the last cruising speed after deactivation (computer supply not cut off).

When activated (using the selection switch) the vehicle speed limiter function limits the vehicle speed to a preselected value. The driver controls the vehicle in the normal way using the accelerator pedal until the cruising speed is reached.

If the driver attempts to exceed this speed, the system ignores the pedal request and controls the vehicle speed in the same way as the cruise control function, as long as the accelerator pedal is kept sufficiently depressed. As with cruise control, the cruising speed can be altered using the one-touch control buttons or by pressing and holding.

For safety reasons, it is possible to exceed the cruising speed by depressing the accelerator pedal beyond the pedal position limiting value. The vehicle speed is fully controlled through pedal position, until the vehicle speed falls back below the limit speed when the speed limiter function will once again be reactivated.

If the driver wishes to exceed the cruising speed, he may:
– exceed the accelerator pedal's kickdown point,
– increase it by pressing or pressing and holding the switch.

The speed limiter function can be deselected either:
– the system control buttons,
– by switching off the speed limiter switch,
– when system events are detected, such as the brake pedal or clutch being pressed,
– when system errors are detected such as an inconsistent vehicle speed.

GETtheMANUALS.org

III - Management of the damper valve

The damper valve is now responsible for two functions:

– Damping: when the engine is switched off, the flap closes in order to block the passage of air towards the cylinders. The aim of this is to stop the engine as quickly as possible and to reduce instabilities when the engine is switched off.
– "Valving" function depending on the engine operation: the damper valve closes by a few **%** to create a "venturi" effect at the EGR valve passage section.

The aim of this is to accelerate the air flow of EGR gases and to reduce the emission of pollutants.

IV - Exhaust gas recirculation management

The EGR (Exhaust Gas Recirculation) system involves removing exhaust gases and reintroducing them into the inlet.
This system plays a major role in reducing diesel engine emissions. The EGR system is cooled by a gas - water exchanger, as on most Euro IV engines. This cooler has a dual position bypass valve, which allows the gas to be cooled or not depending on the emission control requirements. The bypass circuit is inside the cooler (not visible from the outside). The valve control rod is visible from the outside.

The exhaust gases are collected in the exhaust manifold (before the turbocharger), then directed to the EGR cooler and the EGR valve. The EGR valve connects the air circuit between the damper valve and the inlet manifold; the EGR valve is positioned next to the damper valve.

The EGR valve is activated every time the engine stops by performing **10** opening/closing cycles. This programming activates the EGR valve in order to prevent it from clogging. The program is no longer active if there are any system faults.
The EGR system does not operate below **5°C** (air flowmeter temperature).

– The controlled EGR cooler bypass

The EGR cooler bypass is controlled by an all-or-nothing solenoid valve, connected on one side to the vacuum pump, and on the other side to the bypass control diaphragm. It is actuated according to the coolant temperature and the engine operating status. Gases flow into the EGR section of the cooler unless the engine is cold, in which case they flow through the bypass valve. There is also a regular actuation function for the bypass valve to prevent it from clogging.

– EGR valve

The EGR valve is supplied by direct current and connected to a potentiometer copying the position of the valve.
The opening of the valve is actuated (**H bridge**) by a positive command **0** to **100%**.

The valve is controlled using a double regulation loop.
The first loop (fastest) is a position loop. It brings the valve to the desired position by a loop connection using the signal from the position sensor.

The second loop is slower and is an air flow loop. At a given operating point, the air flow setpoint is attained by adjusting the quantity of exhaust gas flowing through the EGR valve and the flow of fresh air passing through the damper valve. At a total constant flow, the more exhaust gas recirculation, the less fresh air there is and vice versa. The air flow is measured by the flowmeter and the setpoint is attained using both the EGR valve position setpoint and the damper valve position setpoint.

GETtheMANUALS.org

The potentiometer serves to control and run fault finding on the valve. The very first time the engine is started, then each subsequent engine start, the "valve closed" position is programmed (offset). This value is compared to the very first offset or last programmed offset, for the purposes of fault finding. It is also used to readjust the valve control function. It is therefore important to associate the EGR valve with the computer that controls it.

Important: the EGR valve offsets must be reinitialised when replacing the valve or reprogramming/replacing the computer.

V - Catalysed particle filter management (only for Vdiag: **18, 1C, 54, 20, 58, 5C, 24, 28 and 62**).

The particle filter prevents the escape of carbon particles emitted by the engine but not yet removed from the exhaust gases.
The particle filter is a microporous structure containing channels in order to force filter the exhaust gas.

The exhaust pipe consists of several components:
– an oxidation catalytic converter mounted after the turbocharger. This catalytic converter ensures that HC/CO levels meet current standards by generating the heat (rise in exhaust temperature caused by catalysis) required for particle filter regeneration,
– a catalysed particle filter located under the bodywork,
– a differential pressure sensor to tell the computer the pressure upstream and downstream of the particle filter,
– a particle filter upstream and downstream temperature sensor,
– a turbine upstream temperature sensor (TAVT).

As the vehicle is driven, the particle filter is loaded with particles (soot). Using a given weight of soot determined via mapping in the computer, regeneration mode can be triggered if the maximum weight of soot in the particle filter is reached and all engine operating conditions are met (coolant temperature, etc.).

Particle filter regeneration consists of burning the particles of soot accumulated in the filter.

The differential pressure sensor measures the particle filter inlet/outlet pressure differential; this measurement is used to estimate the weight of soot present in the particle filter by mapping in the computer:
(weight of soot = pressure differential as a function of exhaust volume flow rate).

If all the criteria are met, the computer enters regeneration mode. The injection programming is then adjusted in order to raise the target exhaust gas temperature to between **550** and **650°C**.
This temperature allows the particles accumulated in the filter to be partially or completely burnt (regeneration).
Regeneration efficiency depends on the particle filter inlet temperature and the time spent in regeneration mode.

Regeneration can be performed automatically while driving if:
– the **soot weight** is less than the threshold for **DF308 Clogged particle filter**
– the **number of regeneration failures while driving** is less than the threshold for **DF311 Failed regenerations limit exceeded**.

GETtheMANUALS.org

VI - Pre-postheating actuation

Pre/postheating control involves actuating the heater plugs and the preheating indicator light on the instrument panel (multiplex signal).
The heater plugs are actuated by a static relay.

After the ignition is switched on, a preheating delay is activated. The length of time that the warning light is lit depends on the coolant temperature, air temperature, atmospheric pressure and battery voltage. When the coolant temperature is below a certain threshold, a postheating function can be used to improve the combustion stability, and consequently engine operation (reducing unburnt particles and pollutant emissions). Postheating can last up to **5 minutes**.

IMPORTANT:
There are two types of heater plug: **SLOW** and **FAST**:
SLOW plugs are identified by a **black ring**.
FAST plugs are identified by a **white ring**.

The heater plugs fitted on the vehicle must be replaced with plugs of the same type; otherwise there is a risk of the heater plugs deteriorating which could lead to engine destruction.

Only **Vdiag 20, 24, 38** and **74**:
when replacing heater plugs with plugs which differ from those currently fitted on the vehicle (replacement of **SLOW** plugs with **FAST** plugs), the computer must be configured **(**see **Replacement of components, Replacing heater plugs**) by running command **SC036 Reinitialise programming** and selecting **Heater plugs** if this choice is available, then following the procedure.

GETtheMANUALS.org

Warning light management:

Instrument panel display
The computer displays certain information on the instrument panel relating to engine operation. This concerns five functions:
– the pre-postheating warning light,
– the coolant temperature warning light,
– the **level 1** fault warning light (non-critical fault),
– the **level 2** fault warning light (emergency stop),
– the **EOBD** (**European On Board Diagnostic**) warning light,
These six functions are represented by 3 warning lights and/or messages displayed by the on-board computer.
Orange pre-post heating/non-critical fault SERVICE warning light (severity 1)
This light is used both as an in-operation indicator light and as a system fault indicator:
– Continuously lit with **+ after ignition feed**:
Indicates preheating of the spark plugs.
– Continuously lit with the **Check injection** message:
Indicates a **level 1** fault (involving operation of the injection system in defect mode).
The driver should have the repairs carried out as soon as possible.
Temperature / red emergency STOP warning light (level 2)
This indicator light is used both as an in-operation indicator light and as a system fault warning light. It lights up for **3 seconds** after the ignition is switched on (automatic test procedure managed by the instrument panel):
– Continuously lit:
Indicates engine overheating (the driver is free to choose whether or not to stop the vehicle).
– Continuously lit with the **faulty injection** message:
Indicates a **level 2** fault (In this case, the injection is automatically cut after a few seconds).
The driver should carry out repairs as soon as possible.
ORANGE Excessive pollution EOBD warning light
Symbolised by an engine, it lights up for approximately **3 seconds** when the ignition is switched on.
This warning light comes on if the system has one or more EOBD faults.
This warning light is used to alert the driver to injection faults that could lead to excessive pollution, or if the **EOBD system** (**European On Board Diagnostic**) has been deactivated.
The injection computer requests illumination of the **EOBD** warning light for a **present** fault only after three consecutive driving cycles.
The **3 second** visual inspection when the ignition is switched on (automatic test procedure managed by the instrument panel) is carried out by the injection computer.

Special particle filter ORANGE warning light or warning message (depending on instrument panel)
Only for **Vdiag: 18, 1C, 54, 20, 58, 5C, 24, 26 and 60**.
This warning light or message is used to warn the driver that the particle filter is loaded with particles, (see the soot weight thresholds for illumination of the warning light for fault **DF312 Speed request**) due to driving conditions which were not suitable for regeneration to take place. The driver must then drive as soon as possible at an average speed of **48 mph** (**80 km/h**) subject to the road conditions and authorised speed limits, until the warning light goes out.

GETtheMANUALS.org

EOBD management (European On Board Diagnostic):
The **EOBD** system enables the detection of any faults relating to the vehicle emission control system (**EOBD EURO IV** emission control standards exceeded).
This system should be active for the entire life of the vehicle.

1. Conditions for an EOBD fault appearing

An **EOBD** fault will be detected after **3 driving cycles**.
It allows the driver to know whether the vehicle has a fault directly linked to the emission control system.

2. System faults displayed by the EOBD

Only a few faults are indicated by the **EOBD** system:
– DF002 Air temperature sensor circuit.
– DF004 Turbocharging pressure sensor circuit.
– DF011 Sensor feed voltage no. 1.
– DF012 Sensor feed voltage no. 2.
– DF013 Sensor feed voltage no. 3.
– DF026 Cylinder 1 injector control circuit.
– DF027 Cylinder 2 injector control circuit.
– DF028 Cylinder 3 injector control circuit.
– DF029 Cylinder 4 injector control circuit.
– DF054 Turbocharging solenoid valve control circuit.
– DF056 Air flow sensor circuit.
– DF107 Computer memory.
– DF200 Atmospheric pressure sensor.
– DF209 EGR position sensor circuit.
– DF272 EGR valve control circuit.
– DF569 Turbocharging circuit.
Some repair operations require programming to ensure that certain engine components function correctly. Follow the programming procedures (see **Replacement of components**), if replacing the exhaust gas recirculation valve or an injector.

3. Conditions for clearing an EOBD fault

An **EOBD** fault is cleared in several phases.
The fault **present** in the **diagnostic tool** will only be **stored** (following repair) after the vehicle has been driven 3 times.
The EOBD warning light will only go out after these 3 driving cycles.
The instrument panel warning light coming on does not automatically mean that the system has a fault.

In order for the EOBD fault and display parameters to be cleared from the computer, the system must go through 40 engine heating cycles.

An engine heating cycle is a driving cycle during which:
– the engine coolant temperature reaches at least 71.1°C,
– the engine coolant temperature varies by 22.2°C in relation to the engine starting temperature.
If one of these conditions is not fulfilled, the EOBD fault will still be present or stored in the injection computer.

GETtheMANUALS.org

Summary of available configuration readings

NOTES	Configuration readings are used to check the state of configurations performed. The configuration readings cannot be changed.

LC009:	**Air conditioning**	**WITH OR WITHOUT**
LC056:	**Thermoplungers**	**WITH OR WITHOUT**
LC065:	**Water in diesel fuel sensor**	**WITH OR WITHOUT**
LC120:	**Cruise control**	**WITH OR WITHOUT**
LC121:	**Speed limiter**	**WITH OR WITHOUT**

GETtheMANUALS.org

COMPUTER REPLACEMENT OR REPROGRAMMING

Operations to be carried out before the injection computer is reprogrammed:

Before reprogramming the injection computer, move the main cruise control/speed limiter switch to the rest position. The information about the cruise control or the speed limiter displayed on the instrument panel disappears.
Otherwise, if the main switch remains in the cruise control or speed limiter position during and after reprogramming, the cruise control/speed limiter function will not be operational.

The procedure for resetting the function is as follows:
Vehicle ignition on.
- Position the cruise control/speed limiter switch in the **rest** position (the computer detects the rest position at that moment).
- Position the cruise control/speed limiter switch in the **Cruise control** position to activate the cruise control function.
- Position the cruise control/speed limiter switch in the **Speed limiter** position to activate the speed limiter function.

Two operations must be performed when replacing or reprogramming the computer:
SC003 Save computer data and **SC001 Enter saved data**.
– Run **SC003 before replacing or reprogramming** the computer. This enables certain data to be saved in the **diagnostic tool** so that the new computer* can be reconfigured like the old one. The saved data includes: injector codes, EGR programming, specific data for particle filter operation and vehicle options.
– Run **SC001 after replacing or reprogramming** the computer. It enables you to rewrite the data (saved by command **SC003**) to the new computer*.

Only **Vdiag 20, 24, 38** and **74**:
– Run **SC036 Reinitialise programming** and select **Heater plugs** (see **Interpretation of commands**); this will allow you to configure the correct type of heater plugs fitted on the vehicle, if necessary.

If you cannot establish dialogue with the computer being replaced: you will not be able to save anything. After replacing the computer:
– Write the **IMA codes** for each injector manually by reading the code on each injector; run command **SC002 Enter injector codes**.
– Check the exhaust pipe for leaks or blockage. Repair if necessary.
– Perform an After-Sales regeneration, follow the procedure for command **SC017 Particle filter regeneration** (see **Interpretation of commands**).
– It is essential to change the **engine oil** and **oil filter**.
– Enter the data specific to particle filter operation by running **SC036 Reinitialise programming** and selecting **after replacing injection computer with no save option**.
– Enter the VIN into the computer, use command **VP010 Enter VIN**.
– Only for **Vdiag 20, 24, 38** and **74:** Configure the type of **heater plugs** fitted on the vehicle by running **SC036 Reinitialise programming** and selecting **Heater plugs** (see **Interpretation of commands**).
Exhaust gas recirculation valve data is programmed automatically the 1st time the new computer is turned on*.

* New computer or reprogrammed computer.
IMA*: Individual injector correction

GETtheMANUALS.org

PROCEDURE

- **Before replacing or reprogramming the computer:**

– Select **SC003 Save computer data**,
– if the following message appears: **there is a saved file; do you want to overwrite this data**?: (this file corresponds to the last save carried out on the tool)
– Select **YES**,

When the save has been performed, replace the computer or carry out the programming then proceed to the next step.

- **After replacing or reprogramming the computer:**

Select **SC001 Write saved data**.
Follow the instructions,
– When the command is finished, switch off the ignition, wait for the message to appear on the **diagnostic tool** (maximum time **8 minutes**): **Loss of dialogue with the computer: EDC16 CP33, check the connection of the tool and the computer supply**.
– Switch on the ignition again and use command **VP010 Enter VIN** if the VIN has been cleared.
– Only **Vdiag 20, 24, 38** and **74**: Establish communication and run **SC036 Reinitialise programming** and select **Heater plugs** (see **Interpretation of commands**), this will allow you to configure the correct type of heater plugs fitted on the vehicle, if necessary.
– For all **Vdiags**, clear the fault memory.
– End of procedure.

GETtheMANUALS.org

REPLACING THE EXHAUST GAS RECIRCULATION (EGR) VALVE

After the exhaust gas recirculation valve has been replaced, the computer must store the new valve offset, and the offset measured when the ignition was last switched off (in power latch phase), which corresponds to the valve closing.
Using this data, the computer can detect whether the valve is clogged or seized.
When the valve is replaced, clear the stored offsets so that the program uses the new valve's offset value.
The data associated with this program is compiled in the **Emission control / EOBD (European On Board Diagnostic)** sub-function.
– **PR128:** FIRST EGR VALVE OFFSET.
– **PR129**: LAST EGR VALVE OFFSET > or = **PR128 if the valve is new**.
Programming **PR128** and **PR129** must be cleared every time the exhaust gas recirculation valve is replaced.
PROCEDURE to be followed **after replacing** the exhaust gas recirculation valve:

- Run command **SC036 Reinitialise programming**.
- Select EGR valve as the operation type, then follow the instructions given by the **diagnostic tool**.

Note:
When reinitialisation is complete, the **Emission control / EOBD** sub-function displays: **PR128 = PR129 = 0%**

• When the command is finished,
– **switch off the ignition**,
– wait for the **diagnostic tool** message (maximum wait **8 minutes**): **Loss of dialogue with the computer: EDC16 CP33, check the tool connection and the computer supply**.
The new EGR valve offset is automatically reprogrammed the next time the ignition is switched on.

Note:
When the new EGR valve offset has been reprogrammed, the **Emission control / EOBD** sub-function will display:
10% < PR128 < 40%
PR129 = 0%

– start the vehicle to enable the latest EGR valve offset to be programmed,
– switch off the ignition,
– wait for the **diagnostic tool** message (maximum wait **8 minutes**): **Loss of dialogue with the computer: EDC16 CP33, check the tool connection and the computer supply** before switching the ignition back on.
The last EGR valve offset reprogrammed is stored on the computer.

Note:
When the last EGR valve offset has been reprogrammed, the **Emission control / EOBD** sub-function will display:
10% < PR128 < 40%,
10% < PR129 < 40%

– then check the system faults, and clear any **stored** faults,
– if there are faults, deal with the **present** faults,
– clear the faults from the computer **memory**.
Carry out a road test followed by another check with the diagnostic tool.
End of the procedure.

GETtheMANUALS.org

REPLACING THE INJECTORS

Note:
The "IMA" code (individual injector correction) is a calibration with corrective values unique to each injector, and is used to adjust their flow accurately (injector classification). This correction takes into account mechanical variances and the variances of the **piezo** actuator. An injector's class is determined by measurements taken at different pressures on a test bench. The **IMA** class identification **(7-character alphanumeric code)** is then engraved on the collar of the injector.
The **IMA** codes must be read from left to right:
– Foolproofing for reading the **IMA** codes is carried out using the low pressure return connector and/or the electrical connector on the injector.
– This reading direction is valid when these connectors are located to the left of the cotech.

The IMA codes are read from left to right (see illustration in **MR 402 (Vel Satis ph2), MR 395 (Laguna II ph2), MR 364 (Mégane II ph2), MR 370 (Scénic II ph2), MR 405 (Espace IV ph2) Mechanical, 13B Diesel injection, Diesel injector, Removal – Refitting**)
Note: When entering characters, confusion can arise between:
– Figure **1** and the letters **I** and **L**,
– Figure **2** and the letter **Z**,
– Figure **5** and the letter **S**,
– Figure **6** and the letter **G**,
– Figure **8** and the letter **B**.
After programming or reprogramming the computer, it is essential to enter the 4 injector codes before confirming the entry.
These individual corrective values are then written to the computer EEPROM, which can then control the injectors, taking into account their manufacturing variation.

After one or more injectors have been replaced, enter the IMA codes again and then run command SC036 Reinitialise programming.
To do this, record the **IMA** code(s) etched on the injector bodies, and enter the codes into the computer using command **SC002 Enter injector codes**, and follow the instructions given by the **diagnostic tool**. **Run command SC036 Reinitialise programming** and select **injectors**, then follow the procedure.

IMPORTANT:
Engines can only operate correctly if the correct IMA* codes have been entered. If no code has been entered, or if an invalid code has been entered, fault DF066 Injector code(s) is present and the engine will run in defect mode (engine speed limited significantly). If another injector's code has been entered, the system will accept it but will make the wrong correction. This could lead to engine damage, loss of performance and excessive pollution.
Always use the correct injector codes for the engine cylinder/computer.

Note:
On the M9R engine (Renault - Nissan partnership engine), cylinder no. 1 is located at the timing end.

GETtheMANUALS.org

IMPORTANT:
- When the command is complete, switch off the ignition and exit fault finding mode.
- Wait for the **diagnostic tool** message (maximum wait **8 min**): **Loss of dialogue with the computer: EDC16 CP33, check the tool connection and the computer supply.**
- Return to fault finding mode.
- select the **Identify computer** function from the main screen.
- Check that the injector codes entered into the computer correspond to those on the injector bodies.
- If the codes do not match, restart the command **SC002 Enter injector codes** procedure.
- Check the system faults, and clear any **stored** faults.
- If the computer does not have any faults, the operation is complete.

If not, deal with the **present** faults.

***IMA: Individual injector correction**

GETtheMANUALS.org

REPLACING THE DAMPER VALVE

After replacing the damper valve, run command **SC036 Reinitialise programming** and select **damper valve**.
When the command is complete, switch off the ignition and exit fault finding mode.
Wait for the **diagnostic tool** message (maximum wait **8 minutes**): **Loss of dialogue with the computer: EDC16 CP33, check the tool connection and the computer supply** before switching the ignition back on.

Note:
When reinitialisation is complete, the **Emission control / EOBD (European On Board Diagnostic)** sub-function displays:
PR858 ≠ 0%, PR859 ≠ 0%, PR860 ≠ 0% and PR861 ≠ 0%.

REPLACING THE PARTICLE FILTER (Vdiag: 18, 1C, 54, 20, 58, 5C, 24, 26, 28, 60 and 62 only)

After replacing the particle filter, reconfigure the computer.
The system must be configured via the diagnostic socket using the RENAULT CLIP tool.
Carry out the following steps:
– switch on the ignition,
– run command **SC036**,
– select **After particle filter replacement** as the operation type and follow the instructions,
– **switch off the ignition and wait** for the **diagnostic tool** message (maximum wait **8 minutes**): **Loss of dialogue with the computer: EDC16 CP33, check the tool connection and the computer supply voltage**,
– then switch on the ignition again**,**
– **clear** the faults from the computer memory **(this operation must be carried out within 3 minutes of the ignition being switched on)**

Carry out a road test followed by a complete check with the **diagnostic tool**.

REPLACING THE HEATER PLUGS (Vdiag 20, 24, 38 and 74 only)

SLOW plugs are identified by a **black ring**.
FAST plugs are identified by a **white ring**.

After replacing the heater plugs with plugs of a different type, reconfigure the type of plugs fitted on the vehicle.

Carry out the following steps:
– switch on the ignition,
– run command **SC036 Reinitialise programming**,
– select **Heater plugs** as the operation type and follow the instructions,
– **switch off the ignition and wait** for the **diagnostic tool** message (maximum wait **8 minutes**): **Loss of dialogue with the computer: EDC16 CP33, check the tool connection and the computer supply voltage**,
– then switch on the ignition again,
– clear the faults from the computer memory.

Carry out a road test followed by a complete check with the **diagnostic tool**.

GETtheMANUALS.org

Tool fault	Associated DTC	Diagnostic tool title
DF001	115	Coolant temperature sensor circuit
DF002	110	Air temperature sensor circuit
DF004	235	Turbocharging pressure sensor circuit
DF007	190	Rail pressure sensor circuit
DF011	641	Sensor supply voltage no. 1
DF012	651	Sensor supply voltage no. 2
DF013	697	Sensor supply voltage no. 3
DF017	670	Preheating unit control circuit
DF018	480	Low speed fan assembly control circuit (except Vdiag 58, 5C)
DF019	481	High speed fan assembly control circuit (except Vdiag 58, 5C)
DF025	380	Pre-postheating unit diagnostic line
DF026	201	Cylinder 1 injector control circuit
DF027	202	Cylinder 2 injector control circuit
DF028	203	Cylinder 3 injector control circuit
DF029	204	Cylinder 4 injector control circuit
DF032	1641	Thermoplunger 1 relay control circuit
DF033	1642	Thermoplunger 2 relay control circuit
DF034	1643	Thermoplunger 3 relay control circuit
DF038	606	Computer
DF046	560	Battery voltage
DF047	2505	Computer feed voltage
DF051	575	Cruise control/speed limiterfunction
DF052	200	Injector control circuit
DF054	45	Turbocharging solenoid valve control circuit
DF056	100	Air flow sensor circuit
DF059	301	Misfiring on cylinder 1
DF060	302	Misfiring on cylinder 2
DF061	303	Misfiring on cylinder 3
DF062	304	Misfiring on cylinder 4
DF065	300	Combustion misfire

GETtheMANUALS.org

Tool fault	Associated DTC	Diagnostic tool title
DF066	611	Injector code(s)
DF069	1655	Impact detected signal
DF086	2600	Coolant pump relay control circuit
DF091	500	Vehicle speed signal
DF098	180	Fuel temperature sensor circuit
DF107	62F	Computer memory
DF119	340	Camshaft sensor signal
DF120	335	Engine speed sensor signal
DF151	685	Main relay circuit
DF165	2299	Accelerator pedal position sensor circuit
DF195	16	Camshaft/engine speed sensor consistency
DF196	225	Pedal sensor circuit gang 1
DF198	2120	Pedal sensor circuit gang 2
DF200	2226	Atmospheric pressure sensor
DF209	409	EGR valve position sensor circuit
DF221	830	Clutch switch signal
DF228	571	Brake signal
DF249	62B	Injector control
DF265	1201	Injector No. 1
DF266	1202	Injector No. 2
DF267	1203	Injector No.3
DF268	1204	Injector No. 4
DF272	487	EGR valve control circuit
DF293	2269	Water in diesel fuel sensor
DF297	2002	Particle filter
DF304	2425	EGR by-pass circuit
DF308	242F	Clogged particle filter
DF309	242A	Particle filter downstream temp.* sensor
DF310	2031	Particle filter upstream temp.* sensor
DF311	1435	Failed regenerations limit exceeded
DF312	1436	Speed request

GETtheMANUALS.org

Tool fault	Associated DTC	Diagnostic tool title
DF315	2452	Particle filter diff.* pressure sensor
DF323	2100	Damper valve
DF333	C101	Injection -> automatic gearbox connection
DF364	530	Air conditioning
DF502	565	Cruise control or speed limiter button
DF532	2502	Alternator charge signal
DF569	2263	Turbocharging circuit
DF645	2101	Damper valve position regulation
DF646	120	Damper valve position sensor
DF647	488	EGR valve position regulation
DF651	470	Turbine upstream pressure sensor circuit
DF652	544	Turbine upstream temperature sensor circuit
DF717	2453	Particle filter upstream pressure
DF890	297	Movement during particle filter regener*
DF891	2146	Group 1 injectors feed
DF892	2149	Group 2 injectors feed
DF895	2293	Pressure regulation on rail
DF896	89	Pressure regulation on pump
DF897	90	Pressure regulator circuit on pump
DF898	2294	Pressure regulator circuit on rail
DF899	3031	Regeneration temperature limit exceeded
DF997	1640	Control unit -> thermoplunger connection
DF1020	253F	Engine oil dilution
DF1069	1670	Heater plugs not configured
DF1188	12B	Air leak in turbocharging circuit

* temp: Temperature
* Diff: Differential
* regen.: Regeneration

GETtheMANUALS.org

DF001 PRESENT OR STORED	COOLANT TEMPERATURE SENSOR CIRCUIT CC.0: Short circuit to earth CO.1: Open circuit or short circuit to +12 V

NOTES	**Priorities when dealing with a number of faults:** **– DF046 Battery voltage.**
	Conditions for applying the fault finding procedure to a stored fault: If the fault is declared **present** after: – the ignition is switched on, – starting the engine, – a road test.
	Special notes: If the fault is **present**: – the thermoplungers are no longer controlled, – the coolant temperature: **PR064 Coolant temperature** is fixed at **119°C** (with the engine running), – the preheating phase lasts longer than **4 seconds**, – the low-speed fan assembly is continuously supplied, – the high speed fan assembly is continuously supplied (for **Vdiag 20, 24, 58, 5C, 26, 28, 60, 62**), – smoke may be emitted from the exhaust, – noise may be heard when hot starting. The **level 1** warning light is illuminated. The **EOBD (European On Board Diagnostic)** warning light is lit (for **Vdiag 20, 24, 58, 5C, 26, 28, 60, 62**) Use bornier **Elé.1681** for any operations on the computer connectors.
	Use the **Wiring Diagram Technical Note, Laguna II ph2, Vel Satis ph2, Espace IV ph2, Mégane II ph2, Scénic II ph2**.

AFTER REPAIR	Deal with any other faults. Clear the fault memory. Switch off the ignition until the end of the power-latch phase, and carry out a road test followed by a check with the **diagnostic tool**.

EDC16CP33_V18_DF001 / EDC16CP33_V1C_DF001 / EDC16CP33_V54_DF001 / EDC16CP33_V20_DF001 / EDC16CP33_V58_DF001 / EDC16CP33_V5C_DF001 / EDC16CP33_V24_DF001 / EDC16CP33_V04_DF001 / EDC16CP33_V08_DF001 / EDC16CP33_V44_DF001 / EDC16CP33_V4C_DF001 / EDC16CP33_V34_DF001 / EDC16CP33_V38_DF001 / EDC16CP33_V74_DF001 / EDC16CP33_V28_DF001 / EDC16CP33_V62_DF001/ EDC16CP33_V26_DF001 / EDC16CP33_V60_DF001

GETtheMANUALS.org

DF001 CONTINUED 1	

CC.0	*NOTES*	None.

Check the condition of the coolant temperature sensor connector (see **Wiring Diagram Technical Note, Laguna II ph2, Vel Satis ph2, Espace IV ph2, Mégane II ph2, Scénic II ph2, component code 244**). Check the condition of the engine management computer connector (see **Wiring Diagram Technical Note, Laguna II ph2, Vel Satis ph2, Espace IV ph2, Mégane II ph2, Scénic II ph2, component code 120**). If the connector or connectors are faulty and if there is a repair procedure (see **Technical Note 6015A, Repairing electrical wiring, Wiring: Precautions for repair**), repair the connector, otherwise replace the wiring.
Measure the **resistance** between connections **3C** and **3JK** of component **244**. If the resistance is less than **87 Ω,** replace the sensor
Check the **insulation** to **earth** of the following connections: • **3C** and **3JK** between components **120** and **244**. If the connection or connections are faulty and if there is a repair method (see **Technical Note 6015A, Electrical wiring repair, Wiring: Precautions for repair**), repair the wiring, otherwise replace the wiring.
If the fault is still present, contact the Techline.

AFTER REPAIR	Deal with any other faults. Clear the fault memory. Switch off the ignition until the end of the power-latch phase, and carry out a road test followed by a check with the **diagnostic tool**.

GETtheMANUALS.org

DF001 CONTINUED 2	

CO.1	*NOTES*	None.

Check the condition of the coolant temperature sensor connector (see **Wiring Diagram Technical Note, Laguna II ph2, Vel Satis ph2, Espace IV ph2, Mégane II ph2, Scénic II ph2, component code 244**).
Check the condition of the engine management computer connector (see **Wiring Diagram Technical Note, Laguna II ph2, Vel Satis ph2, Espace IV ph2, Mégane II ph2, Scénic II ph2, component code 120**).
If the connector or connectors are faulty and if there is a repair procedure (see **Technical Note 6015A, Repairing electrical wiring, Wiring: Precautions for repair**), repair the connector, otherwise replace the wiring.

Measure the **resistance** between connections **3C** and **3JK** of component **244**.
If the resistance is greater than **83 kΩ,** replace the sensor

Check the **insulation** from **+ 12 V** of the following connections:
- **3C** and **3JK** between components **120** and **244**.

Check the **continuity** of the following connections:
- **3C** between components **120** and **244**,
- **3JK** between components **120** and **244.**

If the connection or connections are faulty and if there is a repair method (see **Technical Note 6015A, Electrical wiring repair, Wiring: Precautions for repair**), repair the wiring, otherwise replace the wiring.

If the fault is still present, contact the Techline.

AFTER REPAIR	Deal with any other faults. Clear the fault memory. Switch off the ignition until the end of the power-latch phase, and carry out a road test followed by a check with the **diagnostic tool**.

GETtheMANUALS.org

DF002 PRESENT OR STORED	AIR TEMPERATURE SENSOR CIRCUIT CC.0: Short circuit to earth CO.1: Open circuit or short circuit to +12 V

NOTES	**Priorities when dealing with a number of faults:** **– DF046 Battery voltage.**
	Conditions for applying the fault finding procedure to a stored fault: If the fault is declared **present** after: – the ignition is switched on, – starting the engine, – a road test.
	Special notes: If the fault is **present**: – The **EOBD (European On Board Diagnostic)** warning light is lit. – the thermoplungers are inhibited, – the inlet air temperature is in defect mode, **PR059 Inlet air temperature = 20°C** (with the engine running). The air temperature sensor is integrated into the air flowmeter. Use bornier **Elé. 1681** for all operations on the engine management computer connectors.
	Use the **Wiring Diagram Technical Note, Laguna II ph2, Vel Satis ph2, Espace IV ph2, Mégane II ph2, Scénic II ph2**.

AFTER REPAIR	Deal with any other faults. Clear the fault memory. Switch off the ignition until the end of the power-latch phase, and carry out a road test followed by a check with the **diagnostic tool**.

GETtheMANUALS.org

DF002 CONTINUED 1	

CC.0	*NOTES*	None.

Check the condition of the air flowmeter connector (see **Wiring Diagram Technical Note, Laguna II ph2, Vel Satis ph2, Espace IV ph2, Mégane II ph2, Scénic II ph2, component code 799**).
Check the condition of the engine management computer connector (see **Wiring Diagram Technical Note, Laguna II ph2, Vel Satis ph2, Espace IV ph2, Mégane II ph2, Scénic II ph2, component code 120**).
If the connector or connectors are faulty and if there is a repair procedure (see **Technical Note 6015A, Repairing electrical wiring, Wiring: Precautions for repair**), repair the connector, otherwise replace the wiring.

Measure the **resistance** between connections **3ABQ** and **3DW** of component **799**.
If the resistance is less than **87** Ω**,**replace the air flowmeter

With the flowmeter disconnected, check the **insulation** to **earth** of the following connections:
- **3ABQ** and **3DW**, between components **120** and **799**.

If the connection or connections are faulty and if there is a repair method (see **Technical Note 6015A, Electrical wiring repair, Wiring: Precautions for repair**), repair the wiring, otherwise replace the wiring.

If the fault is still present, contact the Techline.

AFTER REPAIR	Deal with any other faults. Clear the fault memory. Switch off the ignition until the end of the power-latch phase, and carry out a road test followed by a check with the **diagnostic tool**.

GETtheMANUALS.org

DF002 CONTINUED 2	

CO.1	*NOTES*	None.

Check the condition of the air flowmeter connector (see **Wiring Diagram Technical Note, Laguna II ph2, Vel Satis ph2, Espace IV ph2, Mégane II ph2, Scénic II ph2, component code 799**).
Check the condition of the engine management computer connector (see **Wiring Diagram Technical Note, Laguna II ph2, Vel Satis ph2, Espace IV ph2, Mégane II ph2, Scénic II ph2, component code 120**).
If the connector or connectors are faulty and if there is a repair procedure (see **Technical Note 6015A, Repairing electrical wiring, Wiring: Precautions for repair**), repair the connector, otherwise replace the wiring.

Measure the **resistance** between connections **3ABQ** and **3DW** of component **799**.
If the resistance is greater than **50 kΩ**, replace the air flowmeter.

Check the **insulation** from **+ 12 V** of the following connections:
- **3ABQ** between components **120** and **799**,
- **3DW** between components **120** and **799**.

Check the **continuity** of the following connections:
- **3ABQ** between components **120** and **799**,
- **3DW** between components **120** and **799**.

If the connection or connections are faulty and if there is a repair method (see **Technical Note 6015A, Electrical wiring repair, Wiring: Precautions for repair**), repair the wiring, otherwise replace the wiring.

If the fault is still present, contact the Techline.

AFTER REPAIR	Deal with any other faults. Clear the fault memory. Switch off the ignition until the end of the power-latch phase, and carry out a road test followed by a check with the **diagnostic tool**.

GETtheMANUALS.org

DF004 PRESENT OR STORED	TURBOCHARGING PRESSURE SENSOR CIRCUIT CO.0: Open circuit or short circuit to earth CC.1: Short circuit to + 12 V 1.DEF:Consistency between turbocharging pressure and atmospheric pressure.

NOTES	**Priorities when dealing with a number of faults:** **– DF011 Sensor supply voltage no. 1.** **– DF046 Battery voltage.**
	Conditions for applying the fault finding procedure to a stored fault: If the fault is declared **present** after: – the ignition is switched on, – starting the engine, – a road test.
	Special notes: Use bornier **Elé.1681** for any operations on the injection computer connectors. If the fault is **present**: – engine torque limited, – turbocharging pressure is in defect mode, **PR041 Turbocharging pressure = 0.75 bar**, – the **level 1** and **EOBD (European On Board Diagnostic)** warning lights are lit.
	Use the **Wiring Diagram Technical Note, Laguna II ph2, Vel Satis ph2, Espace IV ph2, Mégane II ph2, Scénic II ph2**.

AFTER REPAIR	Deal with any other faults. Clear the fault memory. Switch off the ignition until the end of the power-latch phase, and carry out a road test followed by a check with the **diagnostic tool**.

EDC16CP33_V18_DF004 / EDC16CP33_V1C_DF004 / EDC16CP33_V54_DF004 / EDC16CP33_V20_DF004 / EDC16CP33_V58_DF004 / EDC16CP33_V5C_DF004 / EDC16CP33_V24_DF004 / EDC16CP33_V04_DF004 / EDC16CP33_V08_DF004 / EDC16CP33_V44_DF004 / EDC16CP33_V4C_DF004 / EDC16CP33_V34_DF004 / EDC16CP33_V38_DF004 / EDC16CP33_V74_DF004 / EDC16CP33_V28_DF004 / EDC16CP33_V62_DF004/ EDC16CP33_V26_DF004 / EDC16CP33_V60_DF004

GETtheMANUALS.org

DF004 CONTINUED 1	

CC.0	*NOTES*	None.

Check the condition of the turbocharging pressure sensor connector (see **Wiring Diagram Technical Note, Laguna II ph2, Vel Satis ph2, Espace IV ph2, Mégane II ph2, Scénic II ph2, component code 1071**).
Check the condition of the engine management computer connector (see **Wiring Diagram Technical Note, Laguna II ph2, Vel Satis ph2, Espace IV ph2, Mégane II ph2, Scénic II ph2, component code 120**).
If the connector or connectors are faulty and if there is a repair procedure (see **Technical Note 6015A, Repairing electrical wiring, Wiring: Precautions for repair**), repair the connector, otherwise replace the wiring.

Check the **insulation** to **earth** of the following connections:
- **3LP** and **3LN** between components **120** and **1071**.

Check **the continuity** of the following connections:
- **3LQ** between components **120** and **1071**,
- **3LP** and **3LN** between components **120** and **1071**.

If the connection or connections are faulty and if there is a repair method (see **Technical Note 6015A, Electrical wiring repair, Wiring: Precautions for repair**), repair the wiring, otherwise replace the wiring.

If the wiring of the particle filter downstream temperature sensor, component code **1288**, is present (with or without the sensor being present), check the electrical insulation in relation to **+ 12 V** between the following connections:
– **3XU** between components **120** and **1288**,
– **3TG** between components **120** and **1288**.
If the connection or connections are faulty and there is a repair procedure (see **Technical Note 6015A, Electrical wiring repair, Wiring: Precautions for repair**), repair the wiring, otherwise replace it.

If the fault is still present, replace the turbocharging pressure sensor.

AFTER REPAIR	Deal with any other faults. Clear the fault memory. Switch off the ignition until the end of the power-latch phase, and carry out a road test followed by a check with the **diagnostic tool**.

GETtheMANUALS.org

DF004 CONTINUED 2	

CC.1	*NOTES*	None.

Check the condition of the turbocharging pressure sensor connector (see **Wiring Diagram Technical Note, Laguna II ph2, Vel Satis ph2, Espace IV ph2, Mégane II ph2, Scénic II ph2, component code 1071**).
Check the condition of the engine management computer connector (see **Wiring Diagram Technical Note, Laguna II ph2, Vel Satis ph2, Espace IV ph2, Mégane II ph2, Scénic II ph2, component code 120**).
If the connector or connectors are faulty and if there is a repair procedure (see **Technical Note 6015A, Repairing electrical wiring, Wiring: Precautions for repair**), repair the connector, otherwise replace the wiring.

Check the **insulation** in relation to **+ 12 V** or **+ 5 V** (computer feed) of the following connections:
- **3LP** and **3LQ**, between components **120** and **1071**.

Check **the continuity** of the following connection:
- **3LN** between components **120** and **1071**.

If the connection or connections are faulty and if there is a repair method (see **Technical Note 6015A, Electrical wiring repair, Wiring: Precautions for repair**), repair the wiring, otherwise replace the wiring.

Run **Test 8 Turbocharger rotating part**.

If the fault is still present, replace the turbocharging pressure sensor.

1.DEF	*NOTES*	None.

Check the condition of the turbocharging pressure sensor connector (see **Wiring Diagram Technical Note, Laguna II ph2, Vel Satis ph2, Espace IV ph2, Mégane II ph2, Scénic II ph2, component code 1071**).
Check the condition of the engine management computer connector (see **Wiring Diagram Technical Note, Laguna II ph2, Vel Satis ph2, Espace IV ph2, Mégane II ph2, Scénic II ph2, component code 120**).
If the connector or connectors are faulty and if there is a repair procedure (see **Technical Note 6015A, Repairing electrical wiring, Wiring: Precautions for repair**), repair the connector, otherwise replace the wiring.

Perform fault finding procedure on parameter **PR041 Turbocharging pressure**.

AFTER REPAIR	Deal with any other faults. Clear the fault memory. Switch off the ignition until the end of the power-latch phase, and carry out a road test followed by a check with the **diagnostic tool**.

GETtheMANUALS.org

DF007 PRESENT OR STORED	RAIL PRESSURE SENSOR CIRCUIT CC.0: Short circuit to earth CO.1: Open circuit or short circuit to +12 V 1.DEF: Below minimum threshold 2.DEF: Above maximum threshold

NOTES	**Priorities when dealing with a number of faults:** **– DF013 Sensor supply voltage no. 3.**
	Conditions for applying the fault finding procedure to a stored fault: If the fault is declared **present** after: – the ignition is switched on, – starting the engine, – a road test.
	Special notes: If the fault is present, – the rail pressure is in defect mode, **PR038 Rail pressure ≤ 1150 bar**, – the **level 1** warning light is illuminated, – particle filter regeneration is inhibited. Use bornier **Elé. 1681** for any operations on the injection computer connectors.
	Use the **Wiring Diagram Technical Note, Laguna II ph2, Vel Satis ph2, Espace IV ph2, Mégane II ph2, Scénic II ph2**.

AFTER REPAIR	Deal with any other faults. Clear the fault memory. Switch off the ignition until the end of the power-latch phase, and carry out a road test followed by a check with the **diagnostic tool**.

EDC16CP33_V18_DF007 / EDC16CP33_V1C_DF007 / EDC16CP33_V54_DF007 / EDC16CP33_V20_DF007 / EDC16CP33_V58_DF007 / EDC16CP33_V5C_DF007 / EDC16CP33_V24_DF007 / EDC16CP33_V04_DF007 / EDC16CP33_V08_DF007 / EDC16CP33_V44_DF007 / EDC16CP33_V4C_DF007 / EDC16CP33_V34_DF007 / EDC16CP33_V38_DF007 / EDC16CP33_V74_DF007 / EDC16CP33_V28_DF007 / EDC16CP33_V62_DF007/ EDC16CP33_V26_DF007 / EDC16CP33_V60_DF007

GETtheMANUALS.org

DF007 CONTINUED 1	

CC.0	*NOTES*	None.

Check the condition of the rail pressure sensor connector (see **Wiring Diagram Technical Note, Laguna II ph2, Vel Satis ph2, Espace IV ph2, Mégane II ph2, Scénic II ph2, component code 1032**).
Check the condition of the engine management computer connector (see **Wiring Diagram Technical Note, Laguna II ph2, Vel Satis ph2, Espace IV ph2, Mégane II ph2, Scénic II ph2, component code 120**).
If the connector or connectors are faulty and if there is a repair procedure (see **Technical Note 6015A, Electrical wiring repair, Wiring: Precautions for repair**), repair the connector, otherwise replace the wiring.

Check **the continuity** of the following connection:
- **3LX** between components **120** and **1032**.

Check the **insulation** to **earth** of the following connection:
- **3LY** between components **120** and **1032**.

If the connection or connections are faulty and there is a repair procedure (see **Technical Note 6015A, Electrical wiring repair, Wiring: Precautions for repair**), repair the wiring, otherwise replace it.

If the wiring of the particle filter downstream temperature sensor, component code **1288**, is present (with or without the sensor being present), check the electrical insulation in relation to **+ 12 V** between the following connections:
– **3XU** between components **120** and **1288**,
– **3TG** between components **120** and **1288**.
If the connection or connections are faulty and there is a repair procedure (see **Technical Note 6015A, Electrical wiring repair, Wiring: Precautions for repair**), repair the wiring, otherwise replace it.

If the fault is still present, contact the Techline.

AFTER REPAIR	Deal with any other faults. Clear the fault memory. Switch off the ignition until the end of the power-latch phase, and carry out a road test followed by a check with the **diagnostic tool**.

GETtheMANUALS.org

DF007 CONTINUED 2	

CO.1	*NOTES*	None.

Check the condition of the rail pressure sensor connector (see **Wiring Diagram Technical Note, Laguna II ph2, Vel Satis ph2, Espace IV ph2, Mégane II ph2, Scénic II ph2, component code 1032**).
Check the condition of the engine management computer connector (see **Wiring Diagram Technical Note, Laguna II ph2, Vel Satis ph2, Espace IV ph2, Mégane II ph2, Scénic II ph2, component code 120**).
If the connector or connectors are faulty and if there is a repair procedure (see **Technical Note 6015A, Electrical wiring repair, Wiring: Precautions for repair**), repair the connector, otherwise replace the wiring.

Check the **continuity** of the following connections:
- **3LX** between components **120** and **1032**,
- **3LY** between components **120** and **1032**.

Check the **insulation** from **+ 12 V** or **+ 5 V** (computer feeds) of the following connection:
- **3LY** between components **120** and **1032**.

If the connection or connections are faulty and if there is a repair method (see **Technical Note 6015A, Electrical wiring repair, Wiring: Precautions for repair**), repair the wiring, otherwise replace the wiring.

If the fault is still present, contact the Techline.

AFTER REPAIR	Deal with any other faults. Clear the fault memory. Switch off the ignition until the end of the power-latch phase, and carry out a road test followed by a check with the **diagnostic tool**.

GETtheMANUALS.org

DF007 CONTINUED 3	

1.DEF **2.DEF**	***NOTES***	**Special notes:** The fault is declared **present** or **stored** after an attempt to start or after starting, with the engine cold, several hours after the last trip (the difference in the coolant temperature from the last engine stop and the present attempt to start must be at least **60°C**).

Check the condition of the rail pressure sensor connector (see **Wiring Diagram Technical Note, Laguna II ph2, Vel Satis ph2, Espace IV ph2, Mégane II ph2, Scénic II ph2, component code 1032**).
Check the condition of the engine management computer connector (see **Wiring Diagram Technical Note, Laguna II ph2, Vel Satis ph2, Espace IV ph2, Mégane II ph2, Scénic II ph2, component code 120**).
If the connector or connectors are faulty and if there is a repair procedure (see **Technical Note 6015A, Repairing electrical wiring, Wiring: Precautions for repair**), repair the connector, otherwise replace the wiring.

Check that there are no external diesel leaks from the high pressure fuel circuit.

Check the **continuity** and **absence of interference resistance** of the following connections:
- **3LX** between components **120** and **1032**,
- **3LY** between components **120** and **1032**,
- **3LZ** between components **120** and **1032**.

If the connection or connections are faulty and if there is a repair method (see **Technical Note 6015A, Electrical wiring repair, Wiring: Precautions for repair**), repair the wiring, otherwise replace the wiring.

With the ignition on and the engine stopped for over **1 minute:**
View parameter **PR038 Rail pressure**.
– If the pressure is below **90 bar**, the sensor is in order.
– If the pressure is above **90 bar**, contact the Techline.

If the fault is still present, contact the Techline.

AFTER REPAIR	Deal with any other faults. Clear the fault memory. Switch off the ignition until the end of the power-latch phase, and carry out a road test followed by a check with the **diagnostic tool**.

GETtheMANUALS.org

DF011 PRESENT OR STORED	SENSOR FEED VOLTAGE NO. 1 1.DEF: Above maximum threshold 2.DEF: Below minimum threshold

NOTES	**Conditions for applying the fault finding procedure to a stored fault:** If the fault is declared **present** after: – the ignition is switched on. – starting the engine, – a road test.
	Special notes: If the fault is **present,** – air conditioning is switched off, – engine torque limited, – cruise control/speed limiter function is switched off, – thermoplungers are switched off – the EGR function is disabled by the engine management computer. – Safe mode on the accelerator pedal sensor: **gang 2** value used instead of **gang 1**, – particle filter regenerations when driving are inhibited. the **level 1** and **EOBD (European On Board Diagnostic)** warning lights are lit. Use bornier **Elé. 1681** for all operations on the engine management computer connectors.
	Use the **Wiring Diagram Technical Note, Laguna II ph2, Vel Satis ph2, Espace IV ph2, Mégane II ph2, Scénic II ph2**.

AFTER REPAIR	Deal with any other faults. Clear the fault memory. Switch off the ignition until the end of the power-latch phase, and carry out a road test followed by a check with the **diagnostic tool**.

GETtheMANUALS.org

DF011 CONTINUED 1	

1.DEF	*NOTES*	None.

Note:
Supply no.1 is for the following component:
– accelerator pedal sensor (gang 1),
– turbocharger pressure sensor,
– turbine upstream pressure sensor (**Vdiag 18, 1C, 54, 20, 58, 5C, 24** only).

Measure the sensor feed **voltage** on the following connections:
- **3LR** of component **921**,
- **3LQ** of component **1071**,
- **3MX** of component **1299** (**Vdiag 18, 1C, 54, 20, 58, 5C, 24** only).

if at least one of the three voltages is greater than **+ 5.1 V**, disconnect the sensor connectors one by one.

If, after disconnecting the turbocharging pressure sensor, component code **1071**, the voltage returns to normal,
Check the **insulation** against **+ 12 V** of the following connection:
- **3LQ** between components **120** and **1071**.

If, after disconnecting the accelerator pedal sensor, component code **921**, the voltage returns to normal,
Check the **insulation** against **+ 12 V** of the following connection:
- **3LR** between components **120** and **921.**

If, after disconnecting the turbine upstream pressure sensor, component code **1299**, the voltage returns to normal,
Check the **insulation** against **+ 12 V** of the following connection:
- 3MX between the components **120** and **1299** (**Vdiag 18, 1C, 54, 20, 58, 5C, 24** only).

If the connection or connections are faulty and if there is a repair method (see **Technical Note 6015A, Electrical wiring repair, Wiring: Precautions for repair**), repair the wiring, otherwise replace the wiring.
Clear the faults created by the multiple disconnections.

Check the condition of the engine management computer connector (see **Wiring Diagram Technical Note, Laguna II ph2, Vel Satis ph2, Espace IV ph2, Mégane II ph2, Scénic II ph2, component code 120**).
If the connector is faulty and there is a repair method (see **Technical Note 6015A, Repairing electrical wiring, Wiring: Precautions for repair**), repair the connector, otherwise replace the wiring.

If the fault is still present, contact the Techline.

AFTER REPAIR	Deal with any other faults. Clear the fault memory. Switch off the ignition until the end of the power-latch phase, and carry out a road test followed by a check with the **diagnostic tool**.

GETtheMANUALS.org

DF011 CONTINUED 2	

2.DEF	*NOTES*	None.

Note:
Supply no.1 is for the following component:
– accelerator pedal sensor (gang 1),
– turbocharger pressure sensor,
turbine upstream pressure sensor (**Vdiag 18, 1C, 54, 20, 58, 5C, 24** only).

Measure the sensor feed **voltage** on the following connections:
- **3LR** of component **921**,
- **3LQ** of component **1071**,
- **3MX** of component **1299** (**Vdiag 18, 1C, 54, 20, 58, 5C, 24** only).

If at least one of the three voltages is less than **+ 4.9 V,** disconnect the sensor connectors one by one.

If, after disconnecting the turbocharging pressure sensor, the voltage returns to normal,
Check the **insulation** to **earth** of the following connection:
- **3LQ** between components **120** and **1071**.

If, after disconnecting the accelerator pedal sensor, the voltage returns to normal,
Check the **insulation** to **earth** of the following connection:
- **3LR** between components **120** and **921.**

If the voltage returns to normal after the turbine upstream pressure sensor is disconnected,
Check the **insulation** to **earth** of the following connection:
- **3MX** between components **120** and **1299**.

If the connection or connections are faulty and if there is a repair method (see **Technical Note 6015A, Electrical wiring repair, Wiring: Precautions for repair**), repair the wiring, otherwise replace the wiring.
Clear the faults created by the multiple disconnections.

Check the condition of the engine management computer connector (see **Wiring Diagram Technical Note, Laguna II ph2, Vel Satis ph2, Espace IV ph2, Mégane II ph2, Scénic II ph2, component code 120**).
If the connector is faulty and there is a repair method (see **Technical Note 6015A, Repairing electrical wiring, Wiring: Precautions for repair**), repair the connector, otherwise replace the wiring.

If the fault is still present, contact the Techline.

AFTER REPAIR	Deal with any other faults. Clear the fault memory. Switch off the ignition until the end of the power-latch phase, and carry out a road test followed by a check with the **diagnostic tool**.

GETtheMANUALS.org

DF012 PRESENT OR STORED	SENSOR SUPPLY VOLTAGE NO. 2 1.DEF: Above maximum threshold 2.DEF: Below minimum threshold

NOTES	**Conditions for applying the fault finding procedure to a stored fault:** If the fault is declared **present** after: – the ignition is switched on. – starting the engine, – a road test.
	Special notes: If the fault is **present,** – engine torque limited, – cruise control/speed limiter function is switched off, – the thermoplungers are switched off, – air conditioning is switched off, – the low speed fan assembly is continuously supplied. – safe mode on the accelerator pedal sensor: **gang 1** value used, – particle filter regenerations when driving are inhibited. The **level 1** and **EOBD** (**European On Board Diagnostic**) warning lights are lit. Use bornier **Elé. 1681** for all operations on the engine management computer connectors.
	Use the **Wiring Diagram Technical Note, Laguna II ph2, Vel Satis ph2, Espace IV ph2, Mégane II ph2, Scénic II ph2**.

1.DEF	***NOTES***	None.

Note:
Supply no.2 is for the following components:
– accelerator pedal sensor (gang 2), component code **921**,
– EGR valve position sensor, component code **1460** or **169**,
– damper valve position sensor, component code **1461**,
– cruise control/speed limiter button (button on steering wheel), component code **689**,
– refrigerant sensor, component code **1202**,
– particle filter differential pressure sensor, component code **1290**.

AFTER REPAIR	Deal with any other faults. Clear the fault memory. Switch off the ignition until the end of the power-latch phase, and carry out a road test followed by a check with the **diagnostic tool**.

EDC16CP33_V18_DF012 / EDC16CP33_V1C_DF012 / EDC16CP33_V54_DF012 / EDC16CP33_V20_DF012 / EDC16CP33_V58_DF012 / EDC16CP33_V5C_DF012 / EDC16CP33_V24_DF012 / EDC16CP33_V04_DF012 / EDC16CP33_V08_DF012 / EDC16CP33_V44_DF012 / EDC16CP33_V4C_DF012 / EDC16CP33_V34_DF012 / EDC16CP33_V38_DF012 / EDC16CP33_V74_DF012 / EDC16CP33_V28_DF012 / EDC16CP33_V62_DF012/ EDC16CP33_V26_DF012 / EDC16CP33_V60_DF012

GETtheMANUALS.org

DF012 CONTINUED 1	

Measure the sensor feed **voltage** on the following connections:
- **3LU** of component **921**,
- **86G** of component **689**,
- **38KQ** of component **1461**,
- **3AAQ** of component **1290**,
- **38Y** of component **1202**,
- **3GC** of component **1460** or **169**.

If at least one of the five voltages is greater than **+ 5.1 V**, disconnect these connectors one by one.

If, after disconnecting the damper valve, the voltage returns to normal,
Check the **insulation** against **+ 12 V** of the following connection:
- **38KQ** between components **120** and **1461**.

If after disconnecting the accelerator pedal sensor the voltage returns to normal,
Check the **insulation** against **+ 12 V** of the following connection:
- **3LU** between components **120** and **921**.

If, after disconnecting the EGR valve, the voltage returns to normal,
Check the **insulation** against **+ 12 V** of the following connection:
- connection code **3GC** between components **120** and **1460** or **169**.

If the voltage returns to normal after the particle filter differential pressure sensor is disconnected,
Check the **insulation** against **+ 12 V** of the following connection:
- **3AAQ** between components **120** and **1290**.

If the voltage returns to normal after the refrigerant sensor is disconnected,
Check the **insulation** against **+ 12 V** of the following connection:
- **38Y** between components **120** and **1202**.

If the voltage returns to normal after the cruise control/speed limiter button is disconnected,
Check the **insulation** against **+ 12 V** of the following connection:
- **86G** between components **120** and **689**.

If the connection or connections are faulty and if there is a repair method (see **Technical Note 6015A, Electrical wiring repair, Wiring: Precautions for repair**), repair the wiring, otherwise replace the wiring.

Clear the faults created by the multiple disconnections.

AFTER REPAIR	Deal with any other faults. Clear the fault memory. Switch off the ignition until the end of the power-latch phase, and carry out a road test followed by a check with the **diagnostic tool**.

GETtheMANUALS.org

DF012 CONTINUED 2	

Check the condition of the engine management computer connector (see **Wiring Diagram Technical Note, Laguna II ph2, Vel Satis ph2, Espace IV ph2, Mégane II ph2, Scénic II ph2, component code 120**). If the connector is faulty and there is a repair method (see **Technical Note 6015A, Repairing electrical wiring, Wiring: Precautions for repair**), repair the connector, otherwise replace the wiring.
If the fault is still present, contact the Techline.

AFTER REPAIR	Deal with any other faults. Clear the fault memory. Switch off the ignition until the end of the power-latch phase, and carry out a road test followed by a check with the **diagnostic tool**.

GETtheMANUALS.org

DF012 CONTINUED 3	

2.DEF	*NOTES*	None.

Note:
Supply no.2 is for the following components:
– accelerator pedal sensor (gang 2), component code **921**,
– EGR valve position sensor, component code **1460** or **169**,
– damper valve position sensor, component code **1461**,
– cruise control/speed limiter button (button on steering wheel), component code **689**,
– refrigerant sensor, component code **1202**,
– particle filter differential pressure sensor, component code **1290**.

Measure the supply **voltage** on the following sensors:
- **3LU** of component **921**,
- **86G** of component **689**,
- **38KQ** of component **1461**,
- **3AAQ** of component **1290**,
- **38Y** of component **1202**,
- **3GC** of component **1460** or **169**.

If at least one of the voltages is less than **4.9 V**, disconnect these connectors one by one.

AFTER REPAIR	Deal with any other faults. Clear the fault memory. Switch off the ignition until the end of the power-latch phase, and carry out a road test followed by a check with the **diagnostic tool**.

GETtheMANUALS.org

DF012 CONTINUED 4	

If the voltage returns to normal after the damper valve is disconnected,
Check the **insulation** to **earth** of the following connection:
- **38KQ** between components **120** and **1461**.

If, after disconnecting the accelerator pedal sensor, the voltage returns to normal,
Check the **insulation** to **earth** of the following connection:
- **3LU** between components **120** and **921**.

If, after disconnecting the EGR valve, the voltage returns to normal,
Check the **insulation** to **earth** of the following connection:
- connection code **3GC** between components **120** and **1460** or **169**.

If the voltage returns to normal after the particle filter differential pressure sensor is disconnected,
Check the **insulation** against **+ 12 V** of the following connection:
- **3AAQ** between components **120** and **1290**.

If the voltage returns to normal after the refrigerant sensor is disconnected,
Check the **insulation** against **+ 12 V** of the following connection:
- **38Y** between components **120** and **1202**.

If the voltage returns to normal after the cruise control/speed limiter button is disconnected,
Check the **insulation** against **+ 12 V** of the following connection:
- **86G** between components **120** and **689**.

If the connection or connections are faulty and if there is a repair method (see **Technical Note 6015A, Electrical wiring repair, Wiring: Precautions for repair**), repair the wiring, otherwise replace the wiring.
Clear the faults created by the multiple disconnections.

Check the condition of the engine management computer connector (see **Wiring Diagram Technical Note, Laguna II ph2, Vel Satis ph2, Espace IV ph2, Mégane II ph2, Scénic II ph2, component code 120**).
If the connector is faulty and there is a repair method (see **Technical Note 6015A, Repairing electrical wiring, Wiring: Precautions for repair**), repair the connector, otherwise replace the wiring.

If the fault is still present, contact the Techline.

AFTER REPAIR	Deal with any other faults. Clear the fault memory. Switch off the ignition until the end of the power-latch phase, and carry out a road test followed by a check with the **diagnostic tool**.

GETtheMANUALS.org

DF013 PRESENT OR STORED	SENSOR SUPPLY VOLTAGE No. 3 1.DEF: Above maximum threshold 2.DEF: Below minimum threshold

NOTES	**Conditions for applying the fault finding procedure to a stored fault:** If the fault is declared **present** after: – the ignition is switched on. – starting the engine, – a road test.
	Special notes: If the fault is **present,** – engine torque is limited – test **SC031 Operational fault finding of cylinders** (except **Vdiag 04** and **44**) inhibited, – particle filter regenerations when driving are inhibited, – particle filter fault finding is inhibited. The **level 1** and **EOBD (European On Board Diagnostic)** warning lights are lit. Use bornier **Elé. 1681** for all operations on the engine management computer.
	Use the **Wiring Diagram Technical Note, Laguna II ph2, Vel Satis ph2, Espace IV ph2, Mégane II ph2, Scénic II ph2**.

1.DEF	***NOTES***	None.

Note:
Supply no. 3 is for the following components:
– air flowmeter, component code **799**,
– rail pressure sensor, component code **1032**.

AFTER REPAIR	Deal with any other faults. Clear the fault memory. Switch off the ignition until the end of the power-latch phase, and carry out a road test followed by a check with the **diagnostic tool**.

EDC16CP33_V18_DF013 / EDC16CP33_V1C_DF013 / EDC16CP33_V54_DF013 / EDC16CP33_V20_DF013 / EDC16CP33_V58_DF013 / EDC16CP33_V5C_DF013 / EDC16CP33_V24_DF013 / EDC16CP33_V04_DF013 / EDC16CP33_V08_DF013 / EDC16CP33_V44_DF013 / EDC16CP33_V4C_DF013 / EDC16CP33_V34_DF013 / EDC16CP33_V38_DF013 / EDC16CP33_V74_DF013 / EDC16CP33_V28_DF013 / EDC16CP33_V62_DF013/ EDC16CP33_V26_DF013 / EDC16CP33_V60_DF013

GETtheMANUALS.org

DF013 CONTINUED 1	

Measure the sensor feed **voltage** on the following connections:
- **3KJ** of component **799**,
- **3LX** of component **1032**.

If at least one of the two voltages is greater than **+ 5.1 V**, disconnect the sensor connectors one by one.
If, after disconnecting the air flow sensor, the voltage returns to normal,
Check the **insulation** against **+ 12 V** of the following connection:
- **3KJ** between components **120** and **799**.

If, after disconnecting the rail pressure sensor, the voltage returns to normal,
Check the **insulation** from **+ 12 V** of the following connection: **3LX** between components **120** and **1032**.
If the connection or connections are faulty and if there is a repair method (see **Technical Note 6015A, Electrical wiring repair, Wiring: Precautions for repair**), repair the wiring, otherwise replace the wiring.
Clear the faults created by the multiple disconnections.

Check the condition of the engine management computer connector (see **Wiring Diagram Technical Note, Laguna II ph2, Vel Satis ph2, Espace IV ph2, Mégane II ph2, Scénic II ph2, component code 120**).
If the connector is faulty and there is a repair method (see **Technical Note 6015A, Repairing electrical wiring, Wiring: Precautions for repair**), repair the connector, otherwise replace the wiring.

If the fault is still present, contact the Techline.

AFTER REPAIR	Deal with any other faults. Clear the fault memory. Switch off the ignition until the end of the power-latch phase, and carry out a road test followed by a check with the **diagnostic tool**.

GETtheMANUALS.org

DF013 CONTINUED 2	

2.DEF	*NOTES*	None.

Note:
Supply no. 3 is for the following components:
– air flowmeter, component code **799**,
– rail pressure sensor, component code **1032**.

Measure the sensor feed **voltage** on the following connections:
• **3KJ** of component **799**,
• **3LX** of component **1032**.
If at least one of the two voltages is less than **4.9 V**, disconnect the sensor connectors one by one.

If, after disconnecting the air flow sensor, the voltage returns to normal,
Check the **insulation** to **earth** of the following connection:
• **3KJ** between components **120** and **799**.

If, after disconnecting the rail pressure sensor, the voltage returns to normal,
Check the **insulation** to **earth** of the following connection:
• **3LX** between components **120** and **1032**.

If the connection or connections are faulty and if there is a repair method (see **Technical Note 6015A, Electrical wiring repair, Wiring: Precautions for repair**), repair the wiring, otherwise replace the wiring.
Clear the faults created by the multiple disconnections.

Check the condition of the engine management computer connector (see **Wiring Diagram Technical Note, Laguna II ph2, Vel Satis ph2, Espace IV ph2, Mégane II ph2, Scénic II ph2, component code 120**).
If the connector is faulty and there is a repair method (see **Technical Note 6015A, Repairing electrical wiring, Wiring: Precautions for repair**), repair the connector, otherwise replace the wiring.

If the fault is still present, contact the Techline.

AFTER REPAIR	Deal with any other faults. Clear the fault memory. Switch off the ignition until the end of the power-latch phase, and carry out a road test followed by a check with the **diagnostic tool**.

GETtheMANUALS.org

DF017 PRESENT OR STORED	PRE-POSTHEATING UNIT CONTROL CIRCUIT CO: Open circuit CC.1: Short circuit to + 12 V CC.0: Short circuit to earth 1.DEF: Internal electronic fault

NOTES	**Conditions for applying the fault finding procedure to a stored fault:** If **DF025 Preheating unit diagnostic line** is present, disregard it. If the fault is declared **present** after: – the ignition is switched on. – starting the engine, – a road test, – relay actuation using command **AC037 Preheating relay**.
	Special notes: – preheating inhibited. Use bornier **Elé. 1681** for all operations on the engine management computer connectors.
	Use the **Wiring Diagram Technical Note, Laguna II ph2, Vel Satis ph2, Espace IV ph2, Mégane II ph2, Scénic II ph2**.

CO	***NOTES***	None.

Check the condition of the preheating unit connector (see **Wiring Diagram Technical Note, Laguna II ph2, Vel Satis ph2, Espace IV ph2, Mégane II ph2, Scénic II ph2, component code 257**).
Check the condition of the engine management computer connector (see **Wiring Diagram Technical Note, Laguna II ph2, Vel Satis ph2, Espace IV ph2, Mégane II ph2, Scénic II ph2, component code 120**).
If the connector or connectors are faulty and if there is a repair procedure (see **Technical Note 6015A, Electrical wiring repair, Wiring: Precautions for repair**), repair the connector, otherwise replace the wiring.

Measure the **resistance** between connections **3FF** and **BP35** of component **257**.
If the resistance is greater than **2 kΩ**, replace the preheating unit.

AFTER REPAIR	Deal with any other faults. Clear the fault memory. Switch off the ignition until the end of the power-latch phase, and carry out a road test followed by a check with the **diagnostic tool**.

EDC16CP33_V18_DF017 / EDC16CP33_V1C_DF017 / EDC16CP33_V54_DF017 / EDC16CP33_V20_DF017 / EDC16CP33_V58_DF017 / EDC16CP33_V5C_DF017 / EDC16CP33_V24_DF017 / EDC16CP33_V04_DF017 / EDC16CP33_V08_DF017 / EDC16CP33_V44_DF017 / EDC16CP33_V4C_DF017 / EDC16CP33_V34_DF017 / EDC16CP33_V38_DF017 / EDC16CP33_V74_DF017 / EDC16CP33_V28_DF017 / EDC16CP33_V62_DF017/ EDC16CP33_V26_DF017 / EDC16CP33_V60_DF017

GETtheMANUALS.org

DF017 CONTINUED 1	

Check **the continuity** of the following connection:
- **3FF** between components **120** and **257**.

Check the **+ 12 V battery supply** to the preheating unit on the following connection:
- **BP35** of component **257**.

If the connection or connections are faulty and if there is a repair method (see **Technical Note 6015A, Electrical wiring repair, Wiring: Precautions for repair**), repair the wiring, otherwise replace the wiring.

If the fault is still present, replace the pre-postheating unit.

CC.1	*NOTES*	None.

Check the condition of the preheating unit connector (see **Wiring Diagram Technical Note, Laguna II ph2, Vel Satis ph2, Espace IV ph2, Mégane II ph2, Scénic II ph2, component code 257**).
Check the condition of the engine management computer connector (see **Wiring Diagram Technical Note, Laguna II ph2, Vel Satis ph2, Espace IV ph2, Mégane II ph2, Scénic II ph2, component code 120**).
If the connector or connectors are faulty and if there is a repair procedure (see **Technical Note 6015A, Repairing electrical wiring, Wiring: Precautions for repair**), repair the connector, otherwise replace the wiring.

Measure the **resistance** between connections **3FF** and **BP35** of component **257**.
If the resistance is less than **1 k**Ω, replace the preheating unit.

Check **the insulation** in relation to **+12 V** of the following connection:
- **3FF** between components **120** and **257**.

If the connection is faulty and there is a repair procedure (see **Technical Note 6015A, Electrical wiring repair, Wiring: Precautions for repair**), repair the wiring, otherwise replace it.

If the fault is still present, replace the pre-postheating unit.

AFTER REPAIR	Deal with any other faults. Clear the fault memory. Switch off the ignition until the end of the power-latch phase, and carry out a road test followed by a check with the **diagnostic tool**.

GETtheMANUALS.org

DF017 CONTINUED 2	

CC.0	*NOTES*	None.

Check the condition of the preheating unit connector (see **Wiring Diagram Technical Note, Laguna II ph2, Vel Satis ph2, Espace IV ph2, Mégane II ph2, Scénic II ph2, component code 257**).
Check the condition of the engine management computer connector (see **Wiring Diagram Technical Note, Laguna II ph2, Vel Satis ph2, Espace IV ph2, Mégane II ph2, Scénic II ph2, component code 120**).
If the connector or connectors are faulty and if there is a repair procedure (see **Technical Note 6015A, Repairing electrical wiring, Wiring: Precautions for repair**), repair the connector, otherwise replace the wiring.

Measure the **resistance** between connections **3FF** and **BP35** of component **257**.
If the resistance is less than **450**Ω, replace the preheating unit.

Check the **insulation** to **earth** of the following connection:
- **3FF** between components **120** and **257**.

Check the **+ 12 V battery supply** to the preheating unit:
- **BP35** of component **257**,

If the connection or connections are faulty and if there is a repair method (see **Technical Note 6015A, Electrical wiring repair, Wiring: Precautions for repair**), repair the wiring, otherwise replace the wiring.

If the fault is still present, replace the pre-postheating unit.

AFTER REPAIR	Deal with any other faults. Clear the fault memory. Switch off the ignition until the end of the power-latch phase, and carry out a road test followed by a check with the **diagnostic tool**.

GETtheMANUALS.org

DF017 CONTINUED 3	

1.DEF	*NOTES*	**Special notes:** This fault occurs if the computer's control section overheats when command **AC037 Preheating relay** is run or during normal operation of the preheating unit.

Check the condition of the preheating unit connector (see **Wiring Diagram Technical Note, Laguna II ph2, Vel Satis ph2, Espace IV ph2, Mégane II ph2, Scénic II ph2, component code 257**).
Check the condition of the engine management computer connector (see **Wiring Diagram Technical Note, Laguna II ph2, Vel Satis ph2, Espace IV ph2, Mégane II ph2, Scénic II ph2, component code 120**).
If the connector or connectors are faulty and if there is a repair procedure (see **Technical Note 6015A, Repairing electrical wiring, Wiring: Precautions for repair**), repair the connector, otherwise replace the wiring.

Check **the continuity** and **absence of interference resistance** on the following connection:
- **3FF** between components **120** and **257**.

Check the **+ 12 V battery supply** to the preheating unit:
- **BP35** of component **257**.

If the connection or connections are faulty and if there is a repair method (see **Technical Note 6015A, Electrical wiring repair, Wiring: Precautions for repair**), repair the wiring, otherwise replace the wiring.

If the fault is still present, contact the Techline.

AFTER REPAIR	Deal with any other faults. Clear the fault memory. Switch off the ignition until the end of the power-latch phase, and carry out a road test followed by a check with the **diagnostic tool**.

GETtheMANUALS.org

DF018 PRESENT OR STORED	LOW SPEED FAN ASSEMBLY CONTROL CIRCUIT CO: Open circuit CC.1: Short circuit to + 12 V CC.0: Short circuit to earth 1.DEF: Internal electronic fault

NOTES	**Conditions for applying the fault finding procedure to a stored fault:** If the fault reappears after: – the ignition is switched on. – clearing the fault from the memory, – the relay is actuated using command **AC154 Low speed fan assembly**.
	Special notes: – the high speed fan assembly is actuated at the same time as the low speed fan assembly. – the **level 1** warning light is illuminated.
	Use bornier **Elé. 1681** for all operations on the connector of the engine management computer.
	Use the **Wiring Diagram Technical Note, Laguna II ph2, Vel Satis ph2, Espace IV ph2, Mégane II ph2, Scénic II ph2**.

CO	***NOTES***	No low speed fan assembly control.

Check the condition of the low speed fan assembly relay mounting connector (see **Wiring Diagram Technical Note, Laguna II ph2, Vel Satis ph2, Espace IV ph2, Mégane II ph2, Scénic II ph2, component code 700 or 336**).
Check the condition of the engine management computer connector (see **Wiring Diagram Technical Note, Laguna II ph2, Vel Satis ph2, Espace IV ph2, Mégane II ph2, Scénic II ph2, component code 120**).
If the connector or connectors are faulty and if there is a repair procedure (see **Technical Note 6015A, Repairing electrical wiring, Wiring: Precautions for repair**), repair the connector, otherwise replace the wiring.

AFTER REPAIR	Deal with any other faults. Clear the fault memory. Switch off the ignition until the end of the power-latch phase, and carry out a road test followed by a check with the **diagnostic tool**.

EDC16CP33_V18_DF018 / EDC16CP33_V1C_DF018 / EDC16CP33_V54_DF018 / EDC16CP33_V20_DF018 / EDC16CP33_V24_DF018 / EDC16CP33_V04_DF018 / EDC16CP33_V08_DF018 / EDC16CP33_V44_DF018 / EDC16CP33_V4C_DF018 / EDC16CP33_V34_DF018 / EDC16CP33_V38_DF018 / EDC16CP33_V74_DF018 / EDC16CP33_V28_DF018 / EDC16CP33_V62_DF018 / EDC16CP33_V26_DF018 / EDC16CP33_V60_DF018

GETtheMANUALS.org

DF018 CONTINUED 1	

Measure **the resistance** of the low-speed fan assembly relay coil.
IMPORTANT:
Respect the measuring direction (polarity) as a protection diode is used.
Replace the relay if its resistance is greater than **1 k**Ω or less than **6** Ω.

Remove the low speed relay and check the **continuity** of the following connection:
- **3JN** between components **120** and **700** or **336**.

Check the **+ 12 V after relay supply** to the low speed fan assembly relay.
- **3FB** of component **700** or **336**.

If the connection or connections are faulty and there is a repair procedure (see **Technical Note 6015A, Electrical wiring repair, Wiring: Precautions for repair**), repair the wiring, otherwise replace it.

CC.1	*NOTES*	No low speed fan assembly control.

Check the condition of the low speed fan assembly relay mounting connector (see **Wiring Diagram Technical Note, Laguna II ph2, Vel Satis ph2, Espace IV ph2, Mégane II ph2, Scénic II ph2, component code 700 or 336**).
Check the condition of the engine management computer connector (see **Wiring Diagram Technical Note, Laguna II ph2, Vel Satis ph2, Espace IV ph2, Mégane II ph2, Scénic II ph2, component code 120**).
If the connector or connectors are faulty and if there is a repair procedure (see **Technical Note 6015A, Repairing electrical wiring, Wiring: Precautions for repair**), repair the connector, otherwise replace the wiring.

Measure **the resistance** of the low-speed fan assembly relay coil.
IMPORTANT:
Respect the measuring direction (polarity) as a protection diode is used.
Replace the relay if its resistance is greater than **1 k**Ω or less than **6** Ω.

Remove the low-speed relay and check the **insulation** in relation to **+ 12 V** of the following connection:
- **3JN** between components **120** and **700** or **336**.

If the connection is faulty and there is a repair procedure (see **Technical Note 6015A, Electrical wiring repair, Wiring: Precautions for repair**), repair the wiring, otherwise replace it.

AFTER REPAIR	Deal with any other faults. Clear the fault memory. Switch off the ignition until the end of the power-latch phase, and carry out a road test followed by a check with the **diagnostic tool**.

GETtheMANUALS.org

DF018 CONTINUED 2	

CC.0	*NOTES*	Low speed fan assembly constantly activated.

Check the condition of the low speed fan assembly relay mounting connector (see **Wiring Diagram Technical Note, Laguna II ph2, Vel Satis ph2, Espace IV ph2, Mégane II ph2, Scénic II ph2, component code 700 or 336**).
Check the condition of the engine management computer connector (see **Wiring Diagram Technical Note, Laguna II ph2, Vel Satis ph2, Espace IV ph2, Mégane II ph2, Scénic II ph2, component code 120**).
If the connector or connectors are faulty and if there is a repair procedure (see **Technical Note 6015A, Electrical wiring repair, Wiring: Precautions for repair**), repair the connector, otherwise replace the wiring.

Measure **the resistance** of the low-speed fan assembly relay coil.
IMPORTANT:
Respect the measuring direction (polarity) as a protection diode is used.
Replace the relay if its resistance is greater than **1 k**Ω or less than **6** Ω.

Remove the low speed relay and check the **insulation** to **earth** of the following connection:
- **3JN** between components **120** and **700** or **336**.

Check the **+ 12 V after relay supply** to the low speed fan assembly relay.
- **3FB** of component **700** or **336**.

If the connection or connections are faulty and if there is a repair method (see **Technical Note 6015A, Electrical wiring repair, Wiring: Precautions for repair**), repair the wiring, otherwise replace the wiring.

AFTER REPAIR	Deal with any other faults. Clear the fault memory. Switch off the ignition until the end of the power-latch phase, and carry out a road test followed by a check with the **diagnostic tool**.

GETtheMANUALS.org

DF018 CONTINUED 3	

1.DEF	*NOTES*	**Special notes:** This fault occurs if the computer's control section overheats when command **AC154 Low speed fan assembly is run or during normal operation of the fan assembly relay.**

Check the condition of the low speed fan assembly relay mounting connector (see **Wiring Diagram Technical Note, Laguna II ph2, Vel Satis ph2, Espace IV ph2, Mégane II ph2, Scénic II ph2, component code 700 or 336**).
Check the condition of the engine management computer connector (see **Wiring Diagram Technical Note, Laguna II ph2, Vel Satis ph2, Espace IV ph2, Mégane II ph2, Scénic II ph2, component code 120**).
If the connector or connectors are faulty and if there is a repair procedure (see **Technical Note 6015A, Repairing electrical wiring, Wiring: Precautions for repair**), repair the connector, otherwise replace the wiring.

Measure **the resistance** of the low-speed fan assembly relay coil.
IMPORTANT:
Respect the measuring direction (polarity) as a protection diode is used.
Replace the relay if the resistance of the relay coil is greater than **200** Ω or less than **20** Ω.

Remove the low speed relay and check the **insulation** and **continuity** of the following connection:
- **3JN** between components **120** and **700** or **336**.

Check the **+ 12 V after relay supply** to the low speed fan assembly relay.
- **3FB** of component **700** or **336**.

If the connection or connections are faulty and if there is a repair method (see **Technical Note 6015A, Electrical wiring repair, Wiring: Precautions for repair**), repair the wiring, otherwise replace the wiring.

If the fault is still present, contact the Techline.

AFTER REPAIR	Deal with any other faults. Clear the fault memory. Switch off the ignition until the end of the power-latch phase, and carry out a road test followed by a check with the **diagnostic tool**.

GETtheMANUALS.org

DF019 PRESENT OR STORED	HIGH SPEED FAN ASSEMBLY CONTROL CIRCUIT CO: Open circuit CC.1: Short circuit to + 12 V CC.0: Short circuit to earth 1.DEF: Internal electronic fault

NOTES	**Conditions for applying the fault finding procedure to a stored fault:** If the fault reappears after: – the ignition is switched on. – clearing the fault from the memory, – the relay is actuated using command AC153 High speed fan assembly.
	Special notes: The **level 1** warning light is on.
	Use bornier **Elé. 1681** for all operations on the connector of the engine management computer.
	Use the **Wiring Diagram Technical Note, Laguna II ph2, Vel Satis ph2, Espace IV ph2, Mégane II ph2, Scénic II ph2**.

CO	***NOTES***	No high-speed fan assembly control.

Check the condition of the high speed fan assembly relay mounting connector (see **Wiring Diagram Technical Note, Laguna II ph2, Vel Satis ph2, Espace IV ph2, Mégane II ph2, Scénic II ph2, component code 234 or 335**).
Check the condition of the engine management computer connector (see **Wiring Diagram Technical Note, Laguna II ph2, Vel Satis ph2, Espace IV ph2, Mégane II ph2, Scénic II ph2, component code 120**).
If the connector or connectors are faulty and there is a repair procedure (see **Technical Note 6015A, Electrical wiring repair, Wiring: Precautions for repair**), repair the connector, otherwise replace the wiring.

Measure **the resistance** of the high speed fan assembly relay coil.
IMPORTANT
Respect the measuring direction (polarity) as a protection diode is used.
Replace the relay if its resistance is greater than **1 kΩ** or less than **6 Ω**.

AFTER REPAIR	Deal with any other faults. Clear the fault memory. Switch off the ignition until the end of the power-latch phase, and carry out a road test followed by a check with the **diagnostic tool**.

EDC16CP33_V18_DF019 / EDC16CP33_V1C_DF019 / EDC16CP33_V54_DF019 / EDC16CP33_V20_DF019 / EDC16CP33_V24_DF019 / EDC16CP33_V04_DF019 / EDC16CP33_V08_DF019 / EDC16CP33_V44_DF019 / EDC16CP33_V4C_DF019 / EDC16CP33_V34_DF019 / EDC16CP33_V38_DF019 / EDC16CP33_V74_DF019 / EDC16CP33_V28_DF019 / EDC16CP33_V62_DF019 / EDC16CP33_V26_DF019 / EDC16CP33_V60_DF019

GETtheMANUALS.org

DF019 CONTINUED 1	

Remove the high speed relay and check **the continuity** of the following connection:
- **3JP** between components **120** and **234** or **335**.

Check the **+ 12 V after relay feed** to the high speed fan assembly relay on the following connection:
- **3FB** of component **234** or **335**.

If the connection or connections are faulty and if there is a repair method (see **Technical Note 6015A, Electrical wiring repair, Wiring: Precautions for repair**), repair the wiring, otherwise replace the wiring.

CC.1	*NOTES*	No high-speed fan assembly control.

Check the condition of the high speed fan assembly relay mounting connector (see **Wiring Diagram Technical Note, Laguna II ph2, Vel Satis ph2, Espace IV ph2, Mégane II ph2, Scénic II ph2, component code 234 or 335**).
Check the condition of the engine management computer connector (see **Wiring Diagram Technical Note, Laguna II ph2, Vel Satis ph2, Espace IV ph2, Mégane II ph2, Scénic II ph2, component code 120**).
If the connector or connectors are faulty and if there is a repair procedure (see **Technical Note 6015A, Repairing electrical wiring, Wiring: Precautions for repair**), repair the connector, otherwise replace the wiring.

Measure **the resistance** of the "high-speed fan assembly" relay coil.
IMPORTANT:
Respect the measuring direction (polarity) as a protection diode is used.
Replace the relay if the resistance of the relay coil is greater than **1** Ω or less than **6** Ω.

Remove the high-speed relay and check the **insulation** in relation to **+ 12 V** of the following connection:
- **3JP** between components **120** and **234** or **335**.

If the connection is faulty and there is a repair procedure (see **Technical Note 6015A, Electrical wiring repair, Wiring: Precautions for repair**), repair the wiring, otherwise replace it.

AFTER REPAIR	Deal with any other faults. Clear the fault memory. Switch off the ignition until the end of the power-latch phase, and carry out a road test followed by a check with the **diagnostic tool**.

GETtheMANUALS.org

DF019 CONTINUED 2	

CO.0	*NOTES*	No high-speed fan assembly control.

Check the condition of the high speed fan assembly relay mounting connector (see **Wiring Diagram Technical Note, Laguna II ph2, Vel Satis ph2, Espace IV ph2, Mégane II ph2, Scénic II ph2, component code 234 or 335**).
Check the condition of the engine management computer connector (see **Wiring Diagram Technical Note, Laguna II ph2, Vel Satis ph2, Espace IV ph2, Mégane II ph2, Scénic II ph2, component code 120**).
If the connector or connectors are faulty and if there is a repair procedure (see **Technical Note 6015A, Repairing electrical wiring, Wiring: Precautions for repair**), repair the connector, otherwise replace the wiring.

Measure **the resistance** of the "high-speed fan assembly" relay coil.
IMPORTANT:
Respect the measuring direction (polarity) as a protection diode is used.
Replace the relay if the resistance of the relay coil is greater than **1** Ω or less than **6** Ω.

Remove the high speed relay and check the **insulation** to **earth** of the following connection:
- **3JP** between components **120** and **234** or **335**.

Check the **+ 12 V after relay supply** to the high speed fan assembly relay:
- **3FB** of component **234** or **335**.

If the connection or connections are faulty and if there is a repair method (see **Technical Note 6015A, Electrical wiring repair, Wiring: Precautions for repair**), repair the wiring, otherwise replace the wiring.

AFTER REPAIR	Deal with any other faults. Clear the fault memory. Switch off the ignition until the end of the power-latch phase, and carry out a road test followed by a check with the **diagnostic tool**.

GETtheMANUALS.org

DF019 CONTINUED 3	

1.DEF	*NOTES*	**Special notes:**This fault occurs if the computer's control section overheats when running command **AC153 High speed fan assembly** or during normal operation of the **fan assembly relay**.

Check the condition of the high speed fan assembly relay mounting connector (see **Wiring Diagram Technical Note, Laguna II ph2, Vel Satis ph2, Espace IV ph2, Mégane II ph2, Scénic II ph2, component code 234 or 335**).
Check the condition of the engine management computer connector (see **Wiring Diagram Technical Note, Laguna II ph2, Vel Satis ph2, Espace IV ph2, Mégane II ph2, Scénic II ph2, component code 120**).
If the connector or connectors are faulty and if there is a repair procedure (see **Technical Note 6015A, Repairing electrical wiring, Wiring: Precautions for repair**), repair the connector, otherwise replace the wiring.

Measure **the resistance** of the "high-speed fan assembly" relay coil.
IMPORTANT:
Respect the measuring direction (polarity) as a protection diode is used.
Replace the relay if the resistance of the relay coil is greater than **200** Ω or less than **20** Ω.

Remove the high speed relay and check the **insulation** and **continuity** of the following connection:
3JP between components **120** and **234** or **335**.

Check the **+ 12 V after relay feed** to the high speed fan assembly relay on the following connection:
3FB of component **234** or **335**.

If the connection or connections are faulty and if there is a repair method (see **Technical Note 6015A, Electrical wiring repair, Wiring: Precautions for repair**), repair the wiring, otherwise replace the wiring.

If the fault is still present, contact the Techline.

AFTER REPAIR	Deal with any other faults. Clear the fault memory. Switch off the ignition until the end of the power-latch phase, and carry out a road test followed by a check with the **diagnostic tool**.

GETtheMANUALS.org

DF025 PRESENT OR STORED	PRE-POSTHEATING UNIT DIAGNOSTIC LINE CC.0: Short circuit to earth CO.1: Open circuit or short circuit to +12 V

NOTES	**Priorities when dealing with a number of faults:** **– DF017 Pre-postheating unit control circuit.**
	Conditions for applying the fault finding procedure to a stored fault: If the fault reappears after: – the ignition is switched on in the preheating phase, – engine running in postheating phase, – controlling the heater plugs using command **AC037 Preheating relay**.
	IMPORTANT: – Please observe the cleanliness guidelines and safety advice. – Respect the type of plugs fitted to the vehicle, either **slow** or **fast**: **– Slow plugs are identified by a black ring** **– fast plugs have a white ring.** In **Vdiag 20, 24, 38** and **74**, if the heater plugs are being replaced with plugs of a different type, see **Replacement of components, Replacing heater plugs**.
	Use bornier **Elé. 1681** for all operations on the engine management computer connectors.
	Use the **Wiring Diagram Technical Note, Laguna II ph2, Vel Satis ph2, Espace IV ph2, Mégane II ph2, Scénic II ph2**.

AFTER REPAIR	Deal with any other faults. Clear the fault memory. Switch off the ignition until the end of the power-latch phase, and carry out a road test followed by a check with the **diagnostic tool**.

EDC16CP33_V18_DF025 / EDC16CP33_V1C_DF025 / EDC16CP33_V54_DF025 / EDC16CP33_V20_DF025 / EDC16CP33_V58_DF025 / EDC16CP33_V5C_DF025 / EDC16CP33_V24_DF025 / EDC16CP33_V04_DF025 / EDC16CP33_V08_DF025 / EDC16CP33_V44_DF025 / EDC16CP33_V4C_DF025 / EDC16CP33_V34_DF025 / EDC16CP33_V38_DF025 / EDC16CP33_V74_DF025 / EDC16CP33_V28_DF025 / EDC16CP33_V62_DF025/ EDC16CP33_V26_DF025 / EDC16CP33_V60_DF025

GETtheMANUALS.org

DF025 CONTINUED 1	

CC.0 CO.1	*NOTES*	None.

Check the condition of the preheating unit connector (see **Wiring Diagram Technical Note, Laguna II ph2, Vel Satis ph2, Espace IV ph2, Mégane II ph2, Scénic II ph2, component code 257**).
Check the condition of all of the heater plugs (see **Wiring Diagram Technical Note, Laguna II ph2, Vel Satis ph2, Espace IV ph2, Mégane II ph2, Scénic II ph2, component codes 680, 681, 682, 683**).
If the connector or connectors are faulty and if there is a repair procedure (see **Technical Note 6015A, Repairing electrical wiring, Wiring: Precautions for repair**), repair the connector, otherwise replace the wiring.

During a phase where the heater plugs are actuated by command **AC037 Preheating relay**, measure **the current across** the heater plugs.
Replace heater plugs with currents less than **1A** or greater than **6A** after **5 seconds'** actuation.
Check the **continuity** of the following connections:
- **37AB** between components **257** and **682**,
- **37AA**, between components **257** and **681**,
- **37Z** between components **257** and **680**,
- **37AC** between components **257** and **683**.

If the connection or connections are faulty and if there is a repair method (see **Technical Note 6015A, Electrical wiring repair, Wiring: Precautions for repair**), repair the wiring, otherwise replace the wiring.

AFTER REPAIR	Deal with any other faults. Clear the fault memory. Switch off the ignition until the end of the power-latch phase, and carry out a road test followed by a check with the **diagnostic tool**.

GETtheMANUALS.org

DF025 CONTINUED 2	

Check the **+ 12 V battery supply** to the preheating unit on the following connection:
- **BP35** of component **257**.

Check the engine **earthing**.
If the connection is faulty and there is a repair procedure (see **Technical Note 6015A, Electrical wiring repair, Wiring: Precautions for repair**), repair the wiring, otherwise replace it.

Interpret command **AC037 Preheating relay**.

Check the condition of the engine management computer connector (see **Wiring Diagram Technical Note, Laguna II ph2, Vel Satis ph2, Espace IV ph2, Mégane II ph2, Scénic II ph2, component code 120**).
If the connector is faulty and there is a repair method (see **Technical Note 6015A, Repairing electrical wiring, Wiring: Precautions for repair**), repair the connector, otherwise replace the wiring.

Check the **continuity** and **absence of interference resistance** on the following connection (preheating relay unit diagnostic line):
- **3FY** between components **120** and **257**.

If the connection is faulty and there is a repair procedure (see **Technical Note 6015A, Electrical wiring repair, Wiring: Precautions for repair**), repair the wiring, otherwise replace it.

If the fault is still present, contact the Techline.

AFTER REPAIR	Deal with any other faults. Clear the fault memory. Switch off the ignition until the end of the power-latch phase, and carry out a road test followed by a check with the **diagnostic tool**.

GETtheMANUALS.org

DF026 PRESENT OR STORED	CYLINDER 1 INJECTOR CONTROL CIRCUIT CO: Open circuit CC: Short circuit 1.DEF: Internal electronic fault

NOTES	**Conditions for applying the fault finding procedure to a stored fault:** the fault becomes **present** after: – the ignition is switched on. – the engine is started.
	Special notes: If the fault is **present**: – the **EOBD (European On Board Diagnostic)** warning light is lit, – the **level 2** warning light is lit for **CC** and **1. DEF** (only for **M9R760/761**), – the **level 1** warning light comes on for **CO**. Use bornier **Elé.1681** for all operations on the engine management computer. **After** replacing an injector, run commands **SC002 Enter injector codes** (the **IMA*** codes are read from left to right) and **SC036 Reinitialise programming** and follow the procedure.
	IMPORTANT: – cylinder no.1 is located at the timing end. – please observe the cleanliness guidelines and safety advice. – do not disconnect the injectors with the engine running as this may damage the engine.
	Use the **Wiring Diagram Technical Note, Laguna II ph2, Vel Satis ph2, Espace IV ph2, Mégane II ph2, Scénic II ph2**.

AFTER REPAIR	Deal with any other faults. Clear the fault memory. Switch off the ignition until the end of the power-latch phase, and carry out a road test followed by a check with the **diagnostic tool**.

EDC16CP33_V18_DF026 / EDC16CP33_V1C_DF026 / EDC16CP33_V54_DF026 / EDC16CP33_V20_DF026 / EDC16CP33_V58_DF026 / EDC16CP33_V5C_DF026 / EDC16CP33_V24_DF026 / EDC16CP33_V04_DF026 / EDC16CP33_V08_DF026 / EDC16CP33_V44_DF026 / EDC16CP33_V4C_DF026 / EDC16CP33_V34_DF026 / EDC16CP33_V38_DF026 / EDC16CP33_V74_DF026 / EDC16CP33_V28_DF026 / EDC16CP33_V62_DF026 / EDC16CP33_V26_DF026 / EDC16CP33_V60_DF026

GETtheMANUALS.org

DF026 CONTINUED 1	

CO	***NOTES***	None.

Check **the condition** and **connection** of the injector no. 1 connectors (see **Wiring Diagram Technical Note, Laguna II ph2, Vel Satis ph2, Espace IV ph2, Mégane II ph2, Scénic II ph2, component code 193**).
Check the condition and connection of the engine management computer connector (see **Wiring Diagram Technical Note, Laguna II ph2, Vel Satis ph2, Espace IV ph2, Mégane II ph2, Scénic II ph2, component code 120**).
If the connector or connectors are faulty and if there is a repair procedure (see **Technical Note 6015A, Repairing electrical wiring, Wiring: Precautions for repair**), repair the connector, otherwise replace the wiring.

Check the **continuity** of the following connections:
- **3KW** between components **120** and **193**,
- **3CR** between components **120** and **193**.

If the connection or connections are faulty and if there is a repair method (see **Technical Note 6015A, Electrical wiring repair, Wiring: Precautions for repair**), repair the wiring, otherwise replace the wiring.

Measure the **resistance** between connections **3CR** and **3KW** of component **193**.
If the resistance of injector no. 1 is not between **150 kΩ < X < 210 kW,** replace the injector no. 1, component code **193** (see **MR 402 (Vel Satis ph2), MR 395 (Laguna II ph2), MR 364 (Mégane II ph2), MR 370 (Scénic II ph2), MR 405 (Espace IV ph2) Mechanical, 13B Diesel injection, Diesel injector, Removal - Refitting** and consult the section **Replacement of components**).

If the fault is still present, contact the Techline.

IMA*: Individual injector correction

AFTER REPAIR	Deal with any other faults. Clear the fault memory. Switch off the ignition until the end of the power-latch phase, and carry out a road test followed by a check with the **diagnostic tool**.

GETtheMANUALS.org

DF026 CONTINUED 2	

Check for the absence of a short circuit between the earth (injector body) and the following connections using a multimeter in the ohmmeter setting:
- **3KW** of component **193**
- **3CR** of component **193**.

If the check is not correct, replace injector no. 1, component code 193 (see **MR 402 (Vel Satis ph2), MR 395 (Laguna II ph2), MR 364 (Mégane II ph2), MR 370 (Scénic II ph2), MR 405 (Espace IV ph2) Mechanical, 13B Diesel injection, Diesel injector, Removal - Refitting** and consult the section **Replacement of components**).

If the fault is still present, contact the Techline.

CC	*NOTES*	None.

Check the condition and connection of the injector no. 1 connectors (see **Wiring Diagram Technical Note, Laguna II ph2, Vel Satis ph2, Espace IV ph2, Mégane II ph2, Scénic II ph2, component code 193**).
Check the condition and connection of the engine management computer connector (see **Wiring Diagram Technical Note, Laguna II ph2, Vel Satis ph2, Espace IV ph2, Mégane II ph2, Scénic II ph2, component code 120**).
If the connector or connectors are faulty and if there is a repair procedure (see **Technical Note 6015A, Repairing electrical wiring, Wiring: Precautions for repair**), repair the connector, otherwise replace the wiring.

AFTER REPAIR	Deal with any other faults. Clear the fault memory. Switch off the ignition until the end of the power-latch phase, and carry out a road test followed by a check with the **diagnostic tool**.

GETtheMANUALS.org

DF026 CONTINUED 3	

Check **the insulation** between the following connections:
- **3KW** between components **120** and **193**,
- **3CR** between components **120** and **193**.

If the connection or connections are faulty and if there is a repair method (see **Technical Note 6015A, Electrical wiring repair, Wiring: Precautions for repair**), repair the wiring, otherwise replace the wiring.

Check for the **absence of a short circuit** between **the earth** (injector body) and the following connections using a multimeter in the ohmmeter setting:
- **3KW** of component **193**
- **3CR** of component **193**.

If the check is not correct, replace injector no. 1, component code 193 (see **MR 402 (Vel Satis ph2), MR 395 (Laguna II ph2), MR 364 (Mégane II ph2), MR 370 (Scénic II ph2), MR 405 (Espace IV ph2) Mechanical, 13B Diesel injection, Diesel injector, Removal - Refitting** and consult the section **Replacement of components**).

If the fault is still present, contact the Techline.

AFTER REPAIR	Deal with any other faults. Clear the fault memory. Switch off the ignition until the end of the power-latch phase, and carry out a road test followed by a check with the **diagnostic tool**.

GETtheMANUALS.org

DF026 CONTINUED 4	

1.DEF	*NOTES*	None.

Check the condition and connection of the injector no. 1 connectors (see **Wiring Diagram Technical Note, Laguna II ph2, Vel Satis ph2, Espace IV ph2, Mégane II ph2, Scénic II ph2, component code 193**).
Check the condition and connection of the engine management computer connector (see **Wiring Diagram Technical Note, Laguna II ph2, Vel Satis ph2, Espace IV ph2, Mégane II ph2, Scénic II ph2, component code 120**).
If the connector or connectors are faulty and if there is a repair procedure (see **Technical Note 6015A, Electrical wiring repair, Wiring: Precautions for repair**), repair the connector, otherwise replace the wiring.

Check the **continuity, insulation**, and the **absence of interference resistance** on the following connections:
- **3KW** between components **120** and **193**,
- **3CR** between components **120** and **193**.

If the connection or connections are faulty and if there is a repair method (see **Technical Note 6015A, Electrical wiring repair, Wiring: Precautions for repair**), repair the wiring, otherwise replace the wiring.

Check for the **absence of a short circuit** between **the earth** (injector body) and the following connections using a multimeter in the ohmmeter setting:
- **3KW** of component **193**
- **3CR** of component **193**.

If the check is not correct, replace injector no. 1, component code 193 (see **MR 402 (Vel Satis ph2), MR 395 (Laguna II ph2), MR 364 (Mégane II ph2), MR 370 (Scénic II ph2), MR 405 (Espace IV ph2) Mechanical, 13B Diesel injection, Diesel injector, Removal - Refitting** and consult the section **Replacement of components**).

If the fault is still present, contact the Techline.

AFTER REPAIR	Deal with any other faults. Clear the fault memory. Switch off the ignition until the end of the power-latch phase, and carry out a road test followed by a check with the **diagnostic tool**.

GETtheMANUALS.org

DF027 PRESENT OR STORED	INJECTOR CYLINDER 2 CONTROL CIRCUIT CO: Open circuit CC: Short circuit 1.DEF: Internal electronic fault

NOTES	**Conditions for applying the fault finding procedure to a stored fault:** The fault becomes present after: – the ignition is switched on. – the engine is started.
	Special notes: If the fault is **present**: – the **EOBD (European On Board Diagnostic)** warning light is lit – the **level 2** warning light is lit for **CC** and **1.DEF**, – the **level 1** warning light is lit for **CO** Use bornier **Elé.1681** for all operations on the engine management computer. **After** replacing an injector, run commands **SC002 Enter injector codes** (the **IMA*** codes are read from left to right) and **SC036 Reinitialise programming** and follow the procedure.
	IMPORTANT: – cylinder no.1 is located at the timing end. – please observe the cleanliness guidelines and safety advice. – do not disconnect the injectors with the engine running as this may damage the engine
	Use the **Wiring Diagram Technical Note, Laguna II ph2, Vel Satis ph2, Espace IV ph2, Mégane II ph2, Scénic II ph2**.

AFTER REPAIR	Deal with any other faults. Clear the fault memory. Switch off the ignition until the end of the power-latch phase, and carry out a road test followed by a check with the **diagnostic tool**.

EDC16CP33_V18_DF027 / EDC16CP33_V1C_DF027 / EDC16CP33_V54_DF027 / EDC16CP33_V20_DF027 / EDC16CP33_V58_DF027 / EDC16CP33_V5C_DF027 / EDC16CP33_V24_DF027 / EDC16CP33_V04_DF027 / EDC16CP33_V08_DF027 / EDC16CP33_V44_DF027 / EDC16CP33_V4C_DF027 / EDC16CP33_V34_DF027 / EDC16CP33_V38_DF027 / EDC16CP33_V74_DF027 / EDC16CP33_V28_DF027 / EDC16CP33_V62_DF027/ EDC16CP33_V26_DF027 / EDC16CP33_V60_DF027

GETtheMANUALS.org

DF027 CONTINUED 1	

CO	***NOTES***	None.

Check the condition and connection of the injector no. 2 connectors (see **Wiring Diagram Technical Note, Laguna II ph2, Vel Satis ph2, Espace IV ph2, Mégane II ph2, Scénic II ph2, component code 194**).
Check the condition and connection of the engine management computer connector (see **Wiring Diagram Technical Note, Laguna II ph2, Vel Satis ph2, Espace IV ph2, Mégane II ph2, Scénic II ph2, component code 120**).
If the connector or connectors are faulty and if there is a repair procedure (see **Technical Note 6015A, Repairing electrical wiring, Wiring: Precautions for repair**), repair the connector, otherwise replace the wiring.

Check the **continuity** of the following connections:
- **3KX** between components **120** and **194**,
- **3CS** between components **120** and **194.**

If the connection or connections are faulty and if there is a repair method (see **Technical Note 6015A, Electrical wiring repair, Wiring: Precautions for repair**), repair the wiring, otherwise replace the wiring.

Measure the **resistance** between connections **3KX** and **3CS** of component **194.**
If the resistance of injector no. 2 is not between **150 kΩ < X < 210 kΩ**, replace the injector no. 2, component code **194** (see **MR 402 (Vel Satis ph2), MR 395 (Laguna II ph2), MR 364 (Mégane II ph2), MR 370 (Scénic II ph2), MR 405 (Espace IV ph2) Mechanical, 13B Diesel injection, Diesel injector, Removal - Refitting** and consult the section **Replacement of components**).

IMA*: Individual injector correction

AFTER REPAIR	Deal with any other faults. Clear the fault memory. Switch off the ignition until the end of the power-latch phase, and carry out a road test followed by a check with the **diagnostic tool**.

GETtheMANUALS.org

DF027 CONTINUED 2	

Check for the **absence of a short circuit** between **the earth** (injector body) and the following connections using a multimeter in the ohmmeter setting:
- **3KX** of component **194**
- **3CS** of component **194**.

If the check is not correct, replace the injector no. 2, component code 194 (see **MR 402 (Vel Satis ph2), MR 395 (Laguna II ph2), MR 364 (Mégane II ph2), MR 370 (Scénic II ph2), MR 405 (Espace IV ph2) Mechanical, 13B Diesel injection, Diesel injector, Removal - Refitting** and consult the section **Replacement of components**).

If the fault is still present, contact the Techline.

CC	*NOTES*	None.

Check the condition and connection of the injector no. 2 connectors (see **Wiring Diagram Technical Note, Laguna II ph2, Vel Satis ph2, Espace IV ph2, Mégane II ph2, Scénic II ph2, component code 194**).
Check the condition and connection of the engine management computer connector (see **Wiring Diagram Technical Note, Laguna II ph2, Vel Satis ph2, Espace IV ph2, Mégane II ph2, Scénic II ph2, component code 120**).
If the connector or connectors are faulty and if there is a repair procedure (see **Technical Note 6015A, Repairing electrical wiring, Wiring: Precautions for repair**), repair the connector, otherwise replace the wiring.

AFTER REPAIR	Deal with any other faults. Clear the fault memory. Switch off the ignition until the end of the power-latch phase, and carry out a road test followed by a check with the **diagnostic tool**.

GETtheMANUALS.org

DF027 CONTINUED 3	

Check **the insulation** between the following two connections:
- **3KX** between components **120** and **194**,
- **3CS** between components **120** and **194.**

If the connection or connections are faulty and if there is a repair method (see **Technical Note 6015A, Electrical wiring repair, Wiring: Precautions for repair**), repair the wiring, otherwise replace the wiring.

Check for the **absence of a short circuit** between **the earth** (injector body) and the following connections using a multimeter in the ohmmeter setting:
- **3KX** of component **194**
- **3CS** of component **194**.

If the check is not correct, replace the injector no. 2, component code 194 (see **MR 402 (Vel Satis ph2), MR 395 (Laguna II ph2), MR 364 (Mégane II ph2), MR 370 (Scénic II ph2), MR 405 (Espace IV ph2) Mechanical, 13B Diesel injection, Diesel injector, Removal - Refitting** and consult the section **Replacement of components**).

If the fault is still present, contact the Techline.

AFTER REPAIR	Deal with any other faults. Clear the fault memory. Switch off the ignition until the end of the power-latch phase, and carry out a road test followed by a check with the **diagnostic tool**.

GETtheMANUALS.org

DF027 CONTINUED 4	

1.DEF	*NOTES*	None.

Check the condition and connection of the injector no. 2 connectors (see **Wiring Diagram Technical Note, Laguna II ph2, Vel Satis ph2, Espace IV ph2, Mégane II ph2, Scénic II ph2, component code 194**).
Check the condition and connection of the engine management computer connector (see **Wiring Diagram Technical Note, Laguna II ph2, Vel Satis ph2, Espace IV ph2, Mégane II ph2, Scénic II ph2, component code 120**).
If the connector or connectors are faulty and if there is a repair procedure (see **Technical Note 6015A, Repairing electrical wiring, Wiring: Precautions for repair**), repair the connector, otherwise replace the wiring.

Check the **continuity, insulation**, and the **absence of interference resistance** on the following connections:
- **3KX** between components **120** and **194**,
- **3CS** between components **120** and **194.**

If the connection or connections are faulty and if there is a repair method (see **Technical Note 6015A, Electrical wiring repair, Wiring: Precautions for repair**), repair the wiring, otherwise replace the wiring.

Check for the **absence of a short circuit** between **the earth** (injector body) and the following connections using a multimeter in the ohmmeter setting:
- **3KX** of component **194**
- **3CS** of component **194**.

If the check is not correct, replace the injector no. 2, component code **194** (see **MR 402 (Vel Satis ph2), MR 395 (Laguna II ph2), MR 364 (Mégane II ph2), MR 370 (Scénic II ph2), MR 405 (Espace IV ph2) Mechanical, 13B Diesel injection, Diesel injector, Removal - Refitting** and consult the section **Replacement of components**).

If the fault is still present, contact the Techline.

AFTER REPAIR	Deal with any other faults. Clear the fault memory. Switch off the ignition until the end of the power-latch phase, and carry out a road test followed by a check with the **diagnostic tool**.

GETtheMANUALS.org

DF028 PRESENT OR STORED	CYLINDER 3 INJECTOR CONTROL CIRCUIT CO: Open circuit CC: Short circuit 1.DEF: Internal electronic fault

NOTES	**Conditions for applying the fault finding procedure to a stored fault:** the fault becomes **present** after: – the ignition is switched on. – the engine is started.
	Special notes: If the fault is **present**: – the **EOBD (European On Board Diagnostic)** warning light is lit – the **level 2** warning light is lit for **CC** and **1.DEF**, – the **level 1** warning light is lit for **CO** Use bornier **Elé.1681** for all operations on the engine management computer. **After** replacing an injector, run commands **SC002 Enter injector codes** (the **IMA*** codes are read from left to right) and **SC036 Reinitialise programming** and follow the procedure.
	IMPORTANT: – cylinder no.1 is located at the timing end. – please observe the cleanliness guidelines and safety advice. – do not disconnect the injectors with the engine running as this may damage the engine
	Use the **Wiring Diagram Technical Note, Laguna II ph2, Vel Satis ph2, Espace IV ph2, Mégane II ph2, Scénic II ph2**.

AFTER REPAIR	Deal with any other faults. Clear the fault memory. Switch off the ignition until the end of the power-latch phase, and carry out a road test followed by a check with the **diagnostic tool**.

EDC16CP33_V18_DF028 / EDC16CP33_V1C_DF028 / EDC16CP33_V54_DF028 / EDC16CP33_V20_DF028 / EDC16CP33_V58_DF028 / EDC16CP33_V5C_DF028 / EDC16CP33_V24_DF028 / EDC16CP33_V04_DF028 / EDC16CP33_V08_DF028 / EDC16CP33_V44_DF028 / EDC16CP33_V4C_DF028 / EDC16CP33_V34_DF028 / EDC16CP33_V38_DF028 / EDC16CP33_V74_DF028 / EDC16CP33_V28_DF028 / EDC16CP33_V62_DF028 / EDC16CP33_V26_DF028 / EDC16CP33_V60_DF028

GETtheMANUALS.org

DF028 CONTINUED 1	

CO	*NOTES*	None.

Check the condition and connection of the injector no. 3 connectors (see **Wiring Diagram Technical Note, Laguna II ph2, Vel Satis ph2, Espace IV ph2, Mégane II ph2, Scénic II ph2, component code 195**).
Check the condition and connection of the engine management computer connector (see **Wiring Diagram Technical Note, Laguna II ph2, Vel Satis ph2, Espace IV ph2, Mégane II ph2, Scénic II ph2, component code 120**).
If the connector or connectors are faulty and if there is a repair procedure (see **Technical Note 6015A, Repairing electrical wiring, Wiring: Precautions for repair**), repair the connector, otherwise replace the wiring.

Check the **continuity** of the following connections:
- **3KY** between components **120** and **195**,
- **3CT** between components **120** and **195.**

If the connection or connections are faulty and if there is a repair method (see **Technical Note 6015A, Electrical wiring repair, Wiring: Precautions for repair**), repair the wiring, otherwise replace the wiring.

Measure the **resistance** between connections **3CT** and **3KY** of component **195.**
If the resistance of the injector no. 3 is not between **150 kΩ < X < 210 kΩ**, replace the injector no. 3, component code **195** (see **MR 402 (Vel Satis ph2), MR 395 (Laguna II ph2), MR 364 (Mégane II ph2), MR 370 (Scénic II ph2), MR 405 (Espace IV ph2) Mechanical, 13B Diesel injection, Diesel injector, Removal - Refitting** and consult the section **Replacement of components**).

IMA*: Individual injector correction

AFTER REPAIR	Deal with any other faults. Clear the fault memory. Switch off the ignition until the end of the power-latch phase, and carry out a road test followed by a check with the **diagnostic tool**.

GETtheMANUALS.org

DF028 CONTINUED 2	

Check for the **absence of a short circuit** between **the earth** (injector body) and the following connections using a multimeter in the ohmmeter setting:
- **3KY** of component **195**
- **3CT** of component **195**.

If the check is not correct, replace the injector no. 3, component code **195** (see **MR 402 (Vel Satis ph2), MR 395 (Laguna II ph2), MR 364 (Mégane II ph2), MR 370 (Scénic II ph2), MR 405 (Espace IV ph2) Mechanical, 13B Diesel injection, Diesel injector, Removal - Refitting** and consult the section **Replacement of components**).

If the fault is still present, contact the Techline.

CC	*NOTES*	None.

Check the condition and connection of the injector no. 3 connectors (see **Wiring Diagram Technical Note, Laguna II ph2, Vel Satis ph2, Espace IV ph2, Mégane II ph2, Scénic II ph2, component code 195**).
Check the condition and connection of the engine management computer connector (see **Wiring Diagram Technical Note, Laguna II ph2, Vel Satis ph2, Espace IV ph2, Mégane II ph2, Scénic II ph2, component code 120**).
If the connector or connectors are faulty and if there is a repair procedure (see **Technical Note 6015A, Repairing electrical wiring, Wiring: Precautions for repair**), repair the connector, otherwise replace the wiring.

AFTER REPAIR	Deal with any other faults. Clear the fault memory. Switch off the ignition until the end of the power-latch phase, and carry out a road test followed by a check with the **diagnostic tool**.

GETtheMANUALS.org

DF028 CONTINUED 3	

Check **the insulation** between the following two connections:
- **3KY** between components **120** and **195**,
- **3CT** between components **120** and **195.**

If the connection or connections are faulty and if there is a repair method (see **Technical Note 6015A, Electrical wiring repair, Wiring: Precautions for repair**), repair the wiring, otherwise replace the wiring.

Check for the **absence of a short circuit** between **the earth** (injector body) and the following connections using a multimeter in the ohmmeter setting:
- **3KY** of component **195**
- **3CT** of component **195**.

If the check is not correct, replace the injector no. 3, component code 195 (see **MR 402 (Vel Satis ph2), MR 395 (Laguna II ph2), MR 364 (Mégane II ph2), MR 370 (Scénic II ph2), MR 405 (Espace IV ph2) Mechanical, 13B Diesel injection, Diesel injector, Removal - Refitting** and consult the section **Replacement of components**).

If the fault is still present, contact the Techline.

AFTER REPAIR	Deal with any other faults. Clear the fault memory. Switch off the ignition until the end of the power-latch phase, and carry out a road test followed by a check with the **diagnostic tool**.

GETtheMANUALS.org

DF028 CONTINUED 4	

1.DEF	*NOTES*	None.

Check the condition and connection of the injector no. 3 connectors (see **Wiring Diagram Technical Note, Laguna II ph2, Vel Satis ph2, Espace IV ph2, Mégane II ph2, Scénic II ph2, component code 195**).
Check the condition and connection of the engine management computer connector (see **Wiring Diagram Technical Note, Laguna II ph2, Vel Satis ph2, Espace IV ph2, Mégane II ph2, Scénic II ph2, component code 120**).
If the connector or connectors are faulty and if there is a repair procedure (see **Technical Note 6015A, Repairing electrical wiring, Wiring: Precautions for repair**), repair the connector, otherwise replace the wiring.

Check the **continuity, insulation**, and the **absence of interference resistance** on the following connections:
- **3KY** between components **120** and **195**,
- **3CT** between components **120** and **195.**

If the connection or connections are faulty and if there is a repair method (see **Technical Note 6015A, Electrical wiring repair, Wiring: Precautions for repair**), repair the wiring, otherwise replace the wiring.

Check for the **absence of a short circuit** between **the earth** (injector body) and the following connections using a multimeter in the ohmmeter setting:
- **3KY** of component **195**
- **3CT** of component **195**.

If the check is not correct, replace the injector no. 3, component code 195 (see **MR 402 (Vel Satis ph2), MR 395 (Laguna II ph2), MR 364 (Mégane II ph2), MR 370 (Scénic II ph2), MR 405 (Espace IV ph2) Mechanical, 13B Diesel injection, Diesel injector, Removal - Refitting** and consult the section **Replacement of components**).

If the fault is still present, contact the Techline.

AFTER REPAIR	Deal with any other faults. Clear the fault memory. Switch off the ignition until the end of the power-latch phase, and carry out a road test followed by a check with the **diagnostic tool**.

GETtheMANUALS.org

DF029 PRESENT OR STORED	CYLINDER 4 INJECTOR CONTROL CIRCUIT CO: Open circuit CC: Short circuit 1.DEF: Internal electronic fault

NOTES	**Conditions for applying the fault finding procedure to a stored fault:** the fault becomes **present** after: – the ignition is switched on. – the engine is started.
	Special notes: If the fault is present: – the **EOBD (European On Board Diagnostic)** warning light is lit – the **level 2** warning light is lit for **CC** and **1.DEF**, – the **level 1** warning light is lit for **CO** Use bornier Elé. 1681 for all operations on the engine management computer connectors. **After** replacing an injector, run commands **SC002 Enter injector codes** (the **IMA*** codes are read from left to right) and **SC036 Reinitialise programming** and follow the procedure.
	IMPORTANT: – cylinder no.1 is located at the timing end. – please observe the cleanliness guidelines and safety advice. – do not disconnect the injectors with the engine running as this may damage the engine
	Use the **Wiring Diagram Technical Note, Laguna II ph2, Vel Satis ph2, Espace IV ph2, Mégane II ph2, Scénic II ph2**.

AFTER REPAIR	Deal with any other faults. Clear the fault memory. Switch off the ignition until the end of the power-latch phase, and carry out a road test followed by a check with the **diagnostic tool**.

EDC16CP33_V18_DF029 / EDC16CP33_V1C_DF029 / EDC16CP33_V54_DF029 / EDC16CP33_V20_DF029 / EDC16CP33_V58_DF029 / EDC16CP33_V5C_DF029 / EDC16CP33_V24_DF029 / EDC16CP33_V04_DF029 / EDC16CP33_V08_DF029 / EDC16CP33_V44_DF029 / EDC16CP33_V4C_DF029 / EDC16CP33_V34_DF029 / EDC16CP33_V38_DF029 / EDC16CP33_V74_DF029 / EDC16CP33_V28_DF029 / EDC16CP33_V62_DF029 / EDC16CP33_V26_DF029 / EDC16CP33_V60_DF029

GETtheMANUALS.org

DF029 CONTINUED 1	

CO	*NOTES*	None.

Check the condition and connection of the injector no. 4 connectors (see **Wiring Diagram Technical Note, Laguna II ph2, Vel Satis ph2, Espace IV ph2, Mégane II ph2, Scénic II ph2, component code 196**).
Check the condition and connection of the engine management computer connector (see **Wiring Diagram Technical Note, Laguna II ph2, Vel Satis ph2, Espace IV ph2, Mégane II ph2, Scénic II ph2, component code 120**).
If the connector or connectors are faulty and if there is a repair procedure (see **Technical Note 6015A, Repairing electrical wiring, Wiring: Precautions for repair**), repair the connector, otherwise replace the wiring.

Check the **continuity** of the following connections:
- **3KZ** between components **120** and **196**,
- **3CU** between components **120** and **196**.

If the connection or connections are faulty and if there is a repair method (see **Technical Note 6015A, Electrical wiring repair, Wiring: Precautions for repair**), repair the wiring, otherwise replace the wiring.

Measure the **resistance** between connections **3CU** and **3KZ** of component **196.**
If the resistance of the injector no. 4 is not between **150 kΩ < X < 210 kΩ**, replace the injector no. 4, component code **196** (see **MR 402 (Vel Satis ph2), MR 395 (Laguna II ph2), MR 364 (Mégane II ph2), MR 370 (Scénic II ph2), MR 405 (Espace IV ph2) Mechanical, 13B Diesel injection, Diesel injector, Removal - Refitting** and consult the section **Replacement of components**).

IMA*: Individual injector correction

AFTER REPAIR	Deal with any other faults. Clear the fault memory. Switch off the ignition until the end of the power-latch phase, and carry out a road test followed by a check with the **diagnostic tool**.

GETtheMANUALS.org

DF029 CONTINUED 2	

Check for the **absence of a short circuit** between **the earth** (injector body) and the following connections using a multimeter in the ohmmeter setting:
- **3KZ** of component **196**
- **3CU** of component **196**.

If the check is not correct, replace injector no. 4, component code **196** (see **MR 402 (Vel Satis ph2), MR 395 (Laguna II ph2), MR 364 (Mégane II ph2), MR 370 (Scénic II ph2), MR 405 (Espace IV ph2) Mechanical, 13B Diesel injection, Diesel injector, Removal - Refitting** and consult the section **Replacement of components**).

If the fault is still present, contact the Techline.

CC	*NOTES*	None.

Check the condition and connection of the injector no. 4 connectors (see **Wiring Diagram Technical Note, Laguna II ph2, Vel Satis ph2, Espace IV ph2, Mégane II ph2, Scénic II ph2, component code 196**).
Check the condition and connection of the engine management computer connector (see **Wiring Diagram Technical Note, Laguna II ph2, Vel Satis ph2, Espace IV ph2, Mégane II ph2, Scénic II ph2, component code 120**).
If the connector or connectors are faulty and if there is a repair procedure (see **Technical Note 6015A, Repairing electrical wiring, Wiring: Precautions for repair**), repair the connector, otherwise replace the wiring.

AFTER REPAIR	Deal with any other faults. Clear the fault memory. Switch off the ignition until the end of the power-latch phase, and carry out a road test followed by a check with the **diagnostic tool**.

GETtheMANUALS.org

DF029 CONTINUED 3	

Check **the insulation** between the following two connections:
- **3KZ** between components **120** and **196**,
- **3CU** between components **120** and **196**.

If the connection or connections are faulty and if there is a repair method (see **Technical Note 6015A, Electrical wiring repair, Wiring: Precautions for repair**), repair the wiring, otherwise replace the wiring.

Check for the absence of a short circuit between the earth (injector body) and the following connections using a multimeter in the ohmmeter setting:
- **3KZ** of component **196**
- **3CU** of component **196**.

If the check is not correct, replace injector no. 4, component code **196** (see **MR 402 (Vel Satis ph2), MR 395 (Laguna II ph2), MR 364 (Mégane II ph2), MR 370 (Scénic II ph2), MR 405 (Espace IV ph2) Mechanical, 13B Diesel injection, Diesel injector, Removal - Refitting** and consult the section **Replacement of components**).

If the fault is still present, contact the Techline.

AFTER REPAIR	Deal with any other faults. Clear the fault memory. Switch off the ignition until the end of the power-latch phase, and carry out a road test followed by a check with the **diagnostic tool**.

GETtheMANUALS.org

DF029 CONTINUED 4	

1.DEF	*NOTES*	None.

Check the condition and connection of the injector no. 4 connectors (see **Wiring Diagram Technical Note, Laguna II ph2, Vel Satis ph2, Espace IV ph2, Mégane II ph2, Scénic II ph2, component code 196**).
Check the condition and connection of the engine management computer connector (see **Wiring Diagram Technical Note, Laguna II ph2, Vel Satis ph2, Espace IV ph2, Mégane II ph2, Scénic II ph2, component code 120**).
If the connector or connectors are faulty and if there is a repair procedure (see **Technical Note 6015A, Repairing electrical wiring, Wiring: Precautions for repair**), repair the connector, otherwise replace the wiring.

Check the **continuity, insulation**, and the **absence of interference resistance** on the following connections:
- **3KZ** between components **120** and **196**,
- **3CU** between components **120** and **196**.

If the connection or connections are faulty and if there is a repair method (see **Technical Note 6015A, Electrical wiring repair, Wiring: Precautions for repair**), repair the wiring, otherwise replace the wiring.

Check for the **absence of a short circuit** between **the earth** (injector body) and the following connections using a multimeter in the ohmmeter setting:
- **3KZ** of component **196**
- **3CU** of component **196**.

If the check is not correct, replace injector no. 4, component code **196** (see **MR 402 (Vel Satis ph2), MR 395 (Laguna II ph2), MR 364 (Mégane II ph2), MR 370 (Scénic II ph2), MR 405 (Espace IV ph2) Mechanical, 13B Diesel injection, Diesel injector, Removal - Refitting** and consult the section **Replacement of components**).

If the fault is still present, contact the Techline.

AFTER REPAIR	Deal with any other faults. Clear the fault memory. Switch off the ignition until the end of the power-latch phase, and carry out a road test followed by a check with the **diagnostic tool**.

GETtheMANUALS.org

DF032 PRESENT OR STORED	THERMOPLUNGER 1 RELAY CONTROL CIRCUIT CO: Open circuit CC.1: Short circuit to + 12 V CC.0: Short circuit to earth 1.DEF: Internal electronic fault

NOTES	**Conditions for applying the fault finding procedure to a stored fault:** If the fault becomes present following an actuator command **AC063 Thermoplunger no. 1 relay**.
	Special notes: Use bornier **Elé. 1681** for all operations on the engine management computer connectors.
	Use the **Wiring Diagram Technical Note, Laguna II ph2, Vel Satis ph2, Espace IV ph2, Mégane II ph2, Scénic II ph2**.

CO	***NOTES***	None.

Check the conformity of fuse: **FM14 (70A)** or **FM3 (30A)** (see **MR364 (Mégane II ph2), MR370 (Scénic II ph2), MR 395 (Laguna II ph2), 402 (Vel Satis ph2), 405 (Espace IV ph2) Mechanical, 81C, Fuses, Fuses: List and location of components**).
Check the condition of the thermoplunger **1** relay mounting connector on the engine fuse box or additional heater interface unit (see **Wiring Diagram Technical Note, Laguna II ph2, Vel Satis ph2, Espace IV ph2, Mégane II ph2, Scénic II ph2, component code 1067 or 1550**).
Check the condition of the engine management computer connector (see **Wiring Diagram Technical Note, Laguna II ph2, Vel Satis ph2, Espace IV ph2, Mégane II ph2, Scénic II ph2, component code 120**).
If the connector or connectors are faulty and if there is a repair procedure (see **Technical Note 6015A, Repairing electrical wiring, Wiring: Precautions for repair**), repair the connector, otherwise replace the wiring.

Check the conformity of the thermoplunger **1** relay (with the relay removed) or the additional heater interface unit:
– **Insulation** between connections **BP9** and **3JB** of component **1067** or **1550**.
– Measure the **resistance** between connections **3FB** and **3JA** of component **1067** or **1550**.
Replace the relay if its resistance is greater than **1 k**Ω or less than **6** Ω.
Replace the unit if its resistance is greater than **2 k**Ω **(M9R721)**.

AFTER REPAIR	Deal with any other faults. Clear the fault memory. Switch off the ignition until the end of the power-latch phase, and carry out a road test followed by a check with the **diagnostic tool**.

EDC16CP33_V18_DF032 / EDC16CP33_V1C_DF032 / EDC16CP33_V54_DF032 / EDC16CP33_V20_DF032 / EDC16CP33_V58_DF032 / EDC16CP33_V5C_DF032 / EDC16CP33_V24_DF032 / EDC16CP33_V04_DF032 / EDC16CP33_V08_DF032 / EDC16CP33_V44_DF032 / EDC16CP33_V4C_DF032 / EDC16CP33_V34_DF032 / EDC16CP33_V38_DF032 / EDC16CP33_V74_DF032 / EDC16CP33_V28_DF032 / EDC16CP33_V62_DF032 / EDC16CP33_V26_DF032 / EDC16CP33_V60_DF032

GETtheMANUALS.org

DF032 CONTINUED 1	

Check **the continuity** of the following connection:
- **3JA** between components **120** and **1067** or **1550**.

Check the **+ 12 V after relay supply** to the thermoplunger **1** relay mounting or the additional heater interface unit on the following connection:
- **3FB** of component **1067** or **1550**.

If the connection or connections are faulty and if there is a repair method (see **Technical Note 6015A, Electrical wiring repair, Wiring: Precautions for repair**), repair the wiring, otherwise replace the wiring.

CC.1	*NOTES*	None.

Check the conformity of fuse: **FM14 (70A)** or **FM3 (30A)** (see **MR364 (Mégane II ph2), MR370 (Scénic II ph2), MR 395 (Laguna II ph2), 402 (Vel Satis ph2), 405 (Espace IV ph2) Mechanical, 81C, Fuses, Fuses: List and location of components**).
Check the condition of the thermoplunger **1** relay mounting connector on the engine fuse box or additional heater interface unit (see **Wiring Diagram Technical Note, Laguna II ph2, Vel Satis ph2, Espace IV ph2, Mégane II ph2, Scénic II ph2, component code 1067 or 1550**).
Check the condition of the engine management computer connector (see **Wiring Diagram Technical Note, Laguna II ph2, Vel Satis ph2, Espace IV ph2, Mégane II ph2, Scénic II ph2, component code 120**).
If the connector or connectors are faulty and if there is a repair procedure (see **Technical Note 6015A, Electrical wiring repair, Wiring: Precautions for repair**), repair the connector, otherwise replace the wiring.

Check the conformity of the thermoplunger **1** relay (with the relay removed) or the additional heater interface unit:
– **Insulation** between connections **BP9** and **3JB** of component **1067** or **1550**.
– Measure the **resistance** between connections **3FB** and **3JA** of component **1067** or **1550**.
Replace the relay if its resistance is greater than **1 k**Ω or less than **6** Ω.
Replace the unit if its resistance is greater than **1 k**Ω **(M9R721)**.

Check **the insulation** in relation to **+12 V** of the following connection:
- **3JA** between components **120** and **1067** or **1550**.

If the connection is faulty and there is a repair procedure (see **Technical Note 6015A, Electrical wiring repair, Wiring: Precautions for repair**), repair the wiring, otherwise replace it.

AFTER REPAIR	Deal with any other faults. Clear the fault memory. Switch off the ignition until the end of the power-latch phase, and carry out a road test followed by a check with the **diagnostic tool**.

GETtheMANUALS.org

DF032 CONTINUED 2	

CC.0	*NOTES*	None.

Check the conformity of fuse: **FM14 (70A)** or **FM3 (30A)** (see **MR364 (Mégane II ph2), MR370 (Scénic II ph2), MR 395 (Laguna II ph2), 402 (Vel Satis ph2), 405 (Espace IV ph2) Mechanical, 81C, Fuses, Fuses: List and location of components**).
Check the condition of the thermoplunger **1** relay mounting connector on the engine fuse box or additional heater interface unit (see **Wiring Diagram Technical Note, Laguna II ph2, Vel Satis ph2, Espace IV ph2, Mégane II ph2, Scénic II ph2, component code 1067 or 1550**).
Check the condition of the engine management computer connector (see **Wiring Diagram Technical Note, Laguna II ph2, Vel Satis ph2, Espace IV ph2, Mégane II ph2, Scénic II ph2, component code 120**).
If the connector or connectors are faulty and if there is a repair procedure (see **Technical Note 6015A, Repairing electrical wiring, Wiring: Precautions for repair**), repair the connector, otherwise replace the wiring.

Check the conformity of the thermoplunger **1** relay (with the relay removed) or the additional heater interface unit:
– **Insulation** between connections **BP9** and **3JB** of component **1067** or **1550**.
– Measure the **resistance** between connections **3FB** and **3JA** of component **1067** or **1550**.
Replace the relay if its resistance is greater than **1 k**Ω or less than **6** Ω.
Replace the unit if its resistance is less than **450** Ω **(M9R721)**.

Check the **insulation** to **earth** of the following connection:
• **3JA** between components **120** and **1067**.

Check the **+ 12 V after relay supply** to the thermoplunger **1** relay mounting on the following connection:
• **3FB** of component **1067**.

If the connection or connections are faulty and if there is a repair method (see **Technical Note 6015A, Electrical wiring repair, Wiring: Precautions for repair**), repair the wiring, otherwise replace the wiring.

AFTER REPAIR	Deal with any other faults. Clear the fault memory. Switch off the ignition until the end of the power-latch phase, and carry out a road test followed by a check with the **diagnostic tool**.

GETtheMANUALS.org

DF032 CONTINUED 3	

1.DEF	*NOTES*	**Special notes:** This fault occurs if the computer control section overheats or when command **AC063 Thermoplunger no. 1 relay** is run.

Check the conformity of fuse: **FM14 (70A)** or **FM3 (30A)** (see **MR364 (Mégane II ph2), MR370 (Scénic II ph2), MR 395 (Laguna II ph2), 402 (Vel Satis ph2), 405 (Espace IV ph2) Mechanical, 81C, Fuses, Fuses: List and location of components**).
Check the condition of the thermoplunger **1** relay mounting connector on the engine fuse box or additional heater interface unit (see **Wiring Diagram Technical Note, Laguna II ph2, Vel Satis ph2, Espace IV ph2, Mégane II ph2, Scénic II ph2, component code 1067 or 1550**).
Check the condition of the engine management computer connector (see **Wiring Diagram Technical Note, Laguna II ph2, Vel Satis ph2, Espace IV ph2, Mégane II ph2, Scénic II ph2, component code 120**).
If the connector or connectors are faulty and if there is a repair procedure (see **Technical Note 6015A, Repairing electrical wiring, Wiring: Precautions for repair**), repair the connector, otherwise replace the wiring.

Check the conformity of the thermoplunger **1** relay (with the relay removed) or the additional heater interface unit:
– **Insulation** between connections **BP9** and **3JB** of component **1067** or **1550**.
– Measure the **resistance** between connections **3FB** and **3JA** of component **1067** or **1550**.
Replace the relay if its resistance is greater than **1 kΩ** or less than **6Ω.**
Replace the unit if its resistance is less than **450 Ω (M9R721)**.

Check **the absence of interference resistance** of the following connection:
• **3JA** between components **120** and **1067** or **1550**.

Check the **+ 12 V after relay feed** of the thermoplunger **1** relay mounting on the following connection:
• **3FB** of component **1067** or **1550**.
Check the **+ 12 V after fuse battery supply** to the thermoplunger **1** relay mounting on the following connection:
• **BP9** of component **1067** or **1550**.

If the connection or connections are faulty and if there is a repair method (see **Technical Note 6015A, Electrical wiring repair, Wiring: Precautions for repair**), repair the wiring, otherwise replace the wiring.

If the fault is still present, contact the Techline.

AFTER REPAIR	Deal with any other faults. Clear the fault memory. Switch off the ignition until the end of the power-latch phase, and carry out a road test followed by a check with the **diagnostic tool**.

GETtheMANUALS.org

DF033 PRESENT OR STORED	THERMOPLUNGER 2 RELAY CONTROL CIRCUIT CO: Open circuit CC.1: Short circuit to + 12 V CC.0: Short circuit to earth 1.DEF: Internal electronic fault

NOTES	**Conditions for applying the fault finding procedure to a stored fault:** If the fault becomes **present** after: actuator command **AC064 Thermoplunger no. 2 relay**.
	Special notes: Use bornier **Elé. 1681** for all operations on the engine management computer connectors.
	Use the **Wiring Diagram Technical Note, Laguna II ph2, Vel Satis ph2, Espace IV ph2, Mégane II ph2, Scénic II ph2**.

CO	***NOTES***	None.

Check the conformity of fuse: **FM13 (70A)** or **FM3 (30A)** (see **MR364 (Mégane II ph2), MR370 (Scénic II ph2), MR 395 (Laguna II ph2), 402 (Vel Satis ph2), 405 (Espace IV ph2) Mechanical, 81C, Fuses, Fuses: List and location of components**).
Check the condition of the thermoplunger **2** relay mounting connector on the engine fuse box or additional heater interface unit (see **Wiring Diagram Technical Note, Laguna II ph2, Vel Satis ph2, Espace IV ph2, Mégane II ph2, Scénic II ph2, component code 1068 or 1550**).
Check the condition of the engine management computer connector (see **Wiring Diagram Technical Note, Laguna II ph2, Vel Satis ph2, Espace IV ph2, Mégane II ph2, Scénic II ph2, component code 120**).
If the connector or connectors are faulty and if there is a repair procedure (see **Technical Note 6015A, Repairing electrical wiring, Wiring: Precautions for repair**), repair the connector, otherwise replace the wiring.

Check the conformity of the "thermoplunger **2**" relay (relay removed):
– **Insulation** between connections **BP91** and **3JAD** or **3JD** and **3JAC** of component **1068** or **1550**.
– Measure the **resistance** between connections **3FB** and **3JAA** of component **1068** or **1550**.
Replace the relay if its resistance is greater than **1 kΩ** or less than **6 Ω**.
Replace the unit if the resistance is less than **2kΩ (M9R721)**.

AFTER REPAIR	Deal with any other faults. Clear the fault memory. Switch off the ignition until the end of the power-latch phase, and carry out a road test followed by a check with the **diagnostic tool**.

EDC16CP33_V18_DF033 / EDC16CP33_V1C_DF033 / EDC16CP33_V54_DF033 / EDC16CP33_V20_DF033 / EDC16CP33_V58_DF033 / EDC16CP33_V5C_DF033 / EDC16CP33_V24_DF033 / EDC16CP33_V04_DF033 / EDC16CP33_V08_DF033 / EDC16CP33_V44_DF033 / EDC16CP33_V4C_DF033 / EDC16CP33_V34_DF033 / EDC16CP33_V38_DF033 / EDC16CP33_V74_DF033 / EDC16CP33_V28_DF033 / EDC16CP33_V62_DF033/ EDC16CP33_V26_DF033 / EDC16CP33_V60_DF033

GETtheMANUALS.org

DF033 CONTINUED 1	

Check **the continuity** of the following connection:
- **3JAA** between components **120** and **1068** or **1550**.

Check the **+ 12 V after relay feed** of the thermoplunger **2** relay mounting on the following connection:
- **3FB** of component **1068** or **1550**.

If the connection or connections are faulty and if there is a repair method (see **Technical Note 6015A, Electrical wiring repair, Wiring: Precautions for repair**), repair the wiring, otherwise replace the wiring.

CC.1	*NOTES*	None.

Check the conformity of fuse: **FM13 (70A)** or **FM3 (30A)** (see **MR364 (Mégane II ph2), MR370 (Scénic II ph2), MR 395 (Laguna II ph2), 402 (Vel Satis ph2), 405 (Espace IV ph2) Mechanical, 81C, Fuses, Fuses: List and location of components**).
Check the condition of the thermoplunger **2** relay mounting connector on the engine fuse box or additional heater interface unit (see **Wiring Diagram Technical Note, Laguna II ph2, Vel Satis ph2, Espace IV ph2, Mégane II ph2, Scénic II ph2, component code 1068 or 1550**).
Check the condition of the engine management computer connector (see **Wiring Diagram Technical Note, Laguna II ph2, Vel Satis ph2, Espace IV ph2, Mégane II ph2, Scénic II ph2, component code 120**).
If the connector or connectors are faulty and if there is a repair procedure (see **Technical Note 6015A, Repairing electrical wiring, Wiring: Precautions for repair**), repair the connector, otherwise replace the wiring.

Check the conformity of the "thermoplunger **2**" relay (relay removed):
– **Insulation** between connections **BP91** and **3JAD** or **3JD** and **3JAC** of component **1068** or **1550**.
– Measure the **resistance** between connections **3FB** and **3JAA** of component **1068** or **1550**.
Replace the relay if its resistance is greater than **1 k**Ω or less than **6** Ω.
Replace the unit if its resistance is less than **1 k**Ω **(M9R721)**.

Check **the insulation** in relation to **+12 V** of the following connection:
- **3JAA** between components **120** and **1068** or **1550**.

If the connection is faulty and there is a repair procedure (see **Technical Note 6015A, Electrical wiring repair, Wiring: Precautions for repair**), repair the wiring, otherwise replace it.

AFTER REPAIR	Deal with any other faults. Clear the fault memory. Switch off the ignition until the end of the power-latch phase, and carry out a road test followed by a check with the **diagnostic tool**.

GETtheMANUALS.org

DF033 CONTINUED 2	

CC.0	*NOTES*	None.

Check the conformity of fuse: **FM13 (70A)** or **FM3 (30A)** (see **MR364 (Mégane II ph2), MR370 (Scénic II ph2), MR 395 (Laguna II ph2), 402 (Vel Satis ph2), 405 (Espace IV ph2) Mechanical, 81C, Fuses, Fuses: List and location of components**).
Check the condition of the thermoplunger **2** relay mounting connector on the engine fuse box or additional heater interface unit (see **Wiring Diagram Technical Note, Laguna II ph2, Vel Satis ph2, Espace IV ph2, Mégane II ph2, Scénic II ph2, component code 1068** or **1550**).
Check the condition of the engine management computer connector (see **Wiring Diagram Technical Note, Laguna II ph2, Vel Satis ph2, Espace IV ph2, Mégane II ph2, Scénic II ph2, component code 120**).
If the connector or connectors are faulty and if there is a repair procedure (see **Technical Note 6015A, Repairing electrical wiring, Wiring: Precautions for repair**), repair the connector, otherwise replace the wiring.

Check the conformity of the "thermoplunger **2**" relay (relay removed):
– **Insulation** between connections **BP91** and **3JAD** or **3JD** and **3JAC** of component **1068** or **1550**.
– Measure the **resistance** between connections **3FB** and **3JAA** of component **1068** or **1550**.
Replace the relay if its resistance is greater than **1 kΩ** or less than **6 Ω**.
Replace the unit if the resistance is less than **450 Ω (M9R721)**.

Check the **insulation** to **earth** of the following connection:
• **3JAA** between components **120** and **1068** or **1550**.

Check the **+ 12 V after relay feed** of the thermoplunger **2** relay mounting on the following connection:
• **3FB** of component **1068** or **1550**.

If the connection or connections are faulty and there is a repair procedure (see **Technical Note 6015A, Electrical wiring repair, Wiring: Precautions for repair**), repair the wiring, otherwise replace it.

AFTER REPAIR	Deal with any other faults. Clear the fault memory. Switch off the ignition until the end of the power-latch phase, and carry out a road test followed by a check with the **diagnostic tool**.

GETtheMANUALS.org

DF033 CONTINUED 3	

1.DEF	*NOTES*	**Special notes:** This fault appears when the computer control section has overheated.

Check the conformity of fuse: **FM13 (70A)** or **FM3 (30A)** (see **MR364 (Mégane II ph2), MR370 (Scénic II ph2), MR 395 (Laguna II ph2), 402 (Vel Satis ph2), 405 (Espace IV ph2) Mechanical, 81C, Fuses, Fuses: List and location of components**).
Check the condition of the thermoplunger **2** relay mounting connector on the engine fuse box or additional heater interface unit (see **Wiring Diagram Technical Note, Laguna II ph2, Vel Satis ph2, Espace IV ph2, Mégane II ph2, Scénic II ph2, component code 1068 or 1550**).
Check the condition of the engine management computer connector (see **Wiring Diagram Technical Note, Laguna II ph2, Vel Satis ph2, Espace IV ph2, Mégane II ph2, Scénic II ph2, component code 120**).
If the connector or connectors are faulty and if there is a repair procedure (see **Technical Note 6015A, Electrical wiring repair, Wiring: Precautions for repair**), repair the connector, otherwise replace the wiring.

Check the conformity of the "thermoplunger **2**" relay (relay removed):
– **Insulation** between connections **BP91** and **3JAD** or **3JD** and **3JAC** of component **1068** or **1550**.
– Measure the **resistance** between connections **3FB** and **3JAA** of component **1068** or **1550**.
Replace the relay if the resistance is greater than **200** Ω or less than **20** Ω.

Check **the absence of interference resistance** of the following connection:
• **3JAA** between components **120** and **1068** or **1550**.

Also check the **insulation** on the following connections:
Check the **+ 12 V after relay supply** to the thermoplunger **2** relay mounting on the following connection:
• **3FB** of component **1068** or **1550**.
Check the **+ 12 V after fuse battery supply** to the thermoplunger **2** relay mounting on the following connection:
• **BP91** of component **1068** or **1550**.

If the connection or connections are faulty and there is a repair procedure (see **Technical Note 6015A, Electrical wiring repair, Wiring: Precautions for repair**), repair the wiring, otherwise replace it.

If the fault is still present, contact the Techline.

AFTER REPAIR	Deal with any other faults. Clear the fault memory. Switch off the ignition until the end of the power-latch phase, and carry out a road test followed by a check with the **diagnostic tool**.

GETtheMANUALS.org

DF034 PRESENT OR STORED	THERMOPLUNGER 3 RELAY CONTROL CIRCUIT CO: Open circuit CC.1: Short circuit to + 12 V CC.0: Short circuit to earth 1.DEF: Internal electronic fault

NOTES	**Conditions for applying the fault finding procedure to a stored fault:** If the fault becomes **present** after: – actuator command **AC031 Thermoplunger no. 3 relay**.
	Special notes: Use bornier **Elé. 1681** for all operations on the engine management computer connectors.
	Use the **Wiring Diagram Technical Note, Laguna II ph2, Vel Satis ph2, Espace IV ph2, Mégane II ph2, Scénic II ph2**.

CO	***NOTES***	None.

Check the conformity of fuse: **FM13 (70A)** or **FM14 (70A)** or **FM3 (30A)** (see **MR364 (Mégane II ph2), MR370 (Scénic II ph2), MR 395 (Laguna II ph2), 402 (Vel Satis ph2), 405 (Espace IV ph2) Mechanical, 81C, Fuses, Fuses: List and location of components**).
Check the condition of the thermoplunger **2** relay mounting connector on the engine fuse box or additional heater interface unit (see **Wiring Diagram Technical Note, Laguna II ph2, Vel Satis ph2, Espace IV ph2, Mégane II ph2, Scénic II ph2, component code 1069 or 1550**).
Check the condition of the engine management computer connector (see **Wiring Diagram Technical Note, Laguna II ph2, Vel Satis ph2, Espace IV ph2, Mégane II ph2, Scénic II ph2, component code 120**).
If the connector or connectors are faulty and if there is a repair procedure (see **Technical Note 6015A, Repairing electrical wiring, Wiring: Precautions for repair**), repair the connector, otherwise replace the wiring.

Check the conformity of the thermoplunger **3** relay (relay removed):
– **Insulation** between components **BP9** and **3JAC** or **3JC** of component **1069** or **1550**.
– Measure the **resistance** between connections **3FB** and **3JAB** of component **1069** or **1550**.
Replace the relay if its resistance is greater than **1 kΩ** or less than **6 Ω**.
Replace the unit if the resistance is less than **2kΩ (M9R721)**.

AFTER REPAIR	Deal with any other faults. Clear the fault memory. Switch off the ignition until the end of the power-latch phase, and carry out a road test followed by a check with the **diagnostic tool**.

EDC16CP33_V18_DF034 / EDC16CP33_V1C_DF034 / EDC16CP33_V54_DF034 / EDC16CP33_V20_DF034 / EDC16CP33_V58_DF034 / EDC16CP33_V5C_DF034 / EDC16CP33_V24_DF034 / EDC16CP33_V04_DF034 / EDC16CP33_V08_DF034 / EDC16CP33_V44_DF034 / EDC16CP33_V4C_DF034 / EDC16CP33_V34_DF034 / EDC16CP33_V38_DF034 / EDC16CP33_V74_DF034 / EDC16CP33_V28_DF034 / EDC16CP33_V62_DF034/ EDC16CP33_V26_DF034 / EDC16CP33_V60_DF034

GETtheMANUALS.org

DF034 CONTINUED 1	

Check **the continuity** of the following connection:
- **3JAB** between components **120** and **1069** or **1550**.

Check the **+ 12 V after relay supply** to the thermoplunger **3** relay mounting on the following connection:
- **3FB** of component **1069** or **1550**.

If the connection or connections are faulty and if there is a repair method (see **Technical Note 6015A, Electrical wiring repair, Wiring: Precautions for repair**), repair the wiring, otherwise replace the wiring.

CC.1	*NOTES*	None.

Check the conformity of fuse: **FM13 (70A)** or **FM14 (70A)** or **FM3 (30A)** (see **MR364 (Mégane II ph2), MR370 (Scénic II ph2), MR 395 (Laguna II ph2), 402 (Vel Satis ph2), 405 (Espace IV ph2) Mechanical, 81C, Fuses, Fuses: List and location of components**).
Check the condition of the thermoplunger **3** relay mounting connector on the engine fuse box or additional heater interface unit (see **Wiring Diagram Technical Note, Laguna II ph2, Vel Satis ph2, Espace IV ph2, Mégane II ph2, Scénic II ph2, component code 1069 or 1550**).
Check the condition of the engine management computer connector (see **Wiring Diagram Technical Note, Laguna II ph2, Vel Satis ph2, Espace IV ph2, Mégane II ph2, Scénic II ph2, component code 120**).
If the connector or connectors are faulty and if there is a repair procedure (see **Technical Note 6015A, Repairing electrical wiring, Wiring: Precautions for repair**), repair the connector, otherwise replace the wiring.

Check the conformity of the thermoplunger **3** relay (relay removed):
– **Insulation** between components **BP9** and **3JAC** or **3JC** of component **1069** or **1550**.
– Measure the **resistance** between connections **3FB** and **3JAB** of component **1069** or **1550**.
Replace the relay if the resistance is greater than **1 kΩ** or less than **6 Ω**.
Replace the unit if the resistance is less than **1 kΩ (M9R721)**.

Check **the insulation** in relation to **+12 V** of the following connection:
- **3JAB** between components **120** and **1069** or **1550**.

If the connection is faulty and there is a repair procedure (see **Technical Note 6015A, Electrical wiring repair, Wiring: Precautions for repair**), repair the wiring, otherwise replace it.

AFTER REPAIR	Deal with any other faults. Clear the fault memory. Switch off the ignition until the end of the power-latch phase, and carry out a road test followed by a check with the **diagnostic tool**.

GETtheMANUALS.org

DF034 CONTINUED 2	

CC.0	***NOTES***	None.

Check the conformity of fuse: **FM13 (70A)** or **FM14 (70A)** or **FM3 (30A)** (see **MR364 (Mégane II ph2), MR370 (Scénic II ph2), MR 395 (Laguna II ph2), 402 (Vel Satis ph2), 405 (Espace IV ph2) Mechanical, 81C, Fuses, Fuses: List and location of components**).
Check the condition of the thermoplunger **3** relay mounting connector on the engine fuse box or additional heater interface unit (see **Wiring Diagram Technical Note, Laguna II ph2, Vel Satis ph2, Espace IV ph2, Mégane II ph2, Scénic II ph2, component code 1069 or 1550**).
Check the condition of the engine management computer connector (see **Wiring Diagram Technical Note, Laguna II ph2, Vel Satis ph2, Espace IV ph2, Mégane II ph2, Scénic II ph2, component code 120**).
If the connector or connectors are faulty and if there is a repair procedure (see **Technical Note 6015A, Electrical wiring repair, Wiring: Precautions for repair**), repair the connector, otherwise replace the wiring.

Check the conformity of the thermoplunger **3** relay (relay removed):
– **Insulation** between components **BP9** and **3JAC** or **3JC** of component **1069** or **1550**.
– Measure the **resistance** between connections **3FB** and **3JAB** of component **1069** or **1550**.
Replace the relay if its resistance is greater than **1 kΩ** or less than **6 Ω**.
Replace the unit if the resistance is less than **450 Ω (M9R721)**.

Check the **insulation** to **earth** of the following connection:
• **3JAB** between components **120** and **1069** or **1550**.

Check the **+ 12 V after relay supply** to the thermoplunger **3** relay mounting on the following connection:
• **3FB** of component **1069** or **1550**.

If the connection or connections are faulty and there is a repair procedure (see **Technical Note 6015A, Electrical wiring repair, Wiring: Precautions for repair**), repair the wiring, otherwise replace it.

AFTER REPAIR	Deal with any other faults. Clear the fault memory. Switch off the ignition until the end of the power-latch phase, and carry out a road test followed by a check with the **diagnostic tool**.

GETtheMANUALS.org

DF034 CONTINUED 3	

1.DEF	***NOTES***	**Special notes:** This fault appears when the computer control section has overheated.

Check the conformity of fuse: **FM13 (70A)** or **FM14 (70A)** or **FM3 (30A)** (see **MR364 (Mégane II ph2), MR370 (Scénic II ph2), MR 395 (Laguna II ph2), 402 (Vel Satis ph2), 405 (Espace IV ph2) Mechanical, 81C, Fuses, Fuses: List and location of components**).
Check the condition of the thermoplunger **3** relay mounting connector on the engine fuse box or additional heater interface unit (see **Wiring Diagram Technical Note, Laguna II ph2, Vel Satis ph2, Espace IV ph2, Mégane II ph2, Scénic II ph2, component code 1069 or 1550**).
Check the condition of the engine management computer connector (see **Wiring Diagram Technical Note, Laguna II ph2, Vel Satis ph2, Espace IV ph2, Mégane II ph2, Scénic II ph2, component code 120**).
If the connector or connectors are faulty and if there is a repair procedure (see **Technical Note 6015A, Repairing electrical wiring, Wiring: Precautions for repair**), repair the connector, otherwise replace the wiring.

Check the conformity of the thermoplunger **3** relay (relay removed):
– **Insulation** between components **BP9** and **3JAC** or **3JC** of component **1069** or **1550**.
– Measure the **resistance** between connections **3FB** and **3JAB** of component **1069** or **1550**.
Replace the relay if the resistance is greater than **1 k**Ω or less than **6** Ω.

Check **the absence of interference resistance** of the following connection:
• **3JAB** between components **120** and **1069** or **1550**.

Also check the **insulation** on the following connections:
Check the **+ 12 V after relay feed** to the "thermoplunger **3**" relay mounting on the following connection:
• **3FB** of component **1069** or **1550**.
Check the **+ 12 V after fuse battery supply** to the thermoplunger **3** relay mounting on the following connection:
• **BP9** of component **1069** or **1550**.

If the connection or connections are faulty and there is a repair procedure (see **Technical Note 6015A, Electrical wiring repair, Wiring: Precautions for repair**), repair the wiring, otherwise replace it.

If the fault is still present, contact the Techline.

AFTER REPAIR	Deal with any other faults. Clear the fault memory. Switch off the ignition until the end of the power-latch phase, and carry out a road test followed by a check with the **diagnostic tool**.

GETtheMANUALS.org

DF038 PRESENT OR STORED	COMPUTER 1.DEF: Internal electronic fault 2.DEF: Data inconsistency 3.DEF: Computer feed voltage

NOTES	**Conditions for applying the fault finding procedure to a stored fault:** If the fault is declared **present** after: – starting the engine, – a road test.
	Special notes: If the fault is **present**: – depending on the situation, the **level 1** or **2** warning light is lit for **1.DEF**, – the **level 1** warning light is lit for **2.DEF**, – the **level 2** warning light is lit for **3.DEF**, – engine torque limited, – the engine stops.

1.DEF	***NOTES***	None.

Check the condition of the engine management computer connector (see **Wiring Diagram Technical Note, Laguna II ph2, Vel Satis ph2, Espace IV ph2, Mégane II ph2, Scénic II ph2, component code 120**).
If the fault is **stored**, clear the fault from the computer memory.
Switch off the ignition, wait for the **diagnostic tool** message (maximum wait **8 minutes**): **Loss of dialogue with the computer: EDC16 CP33, check the tool connection and the computer supply** then switch the ignition back on.
Start the engine and re-establish dialogue.

If the fault is still present, contact the Techline.

AFTER REPAIR	Deal with any other faults. Clear the fault memory. Switch off the ignition until the end of the power-latch phase, and carry out a road test followed by a check with the **diagnostic tool**.

EDC16CP33_V18_DF038 / EDC16CP33_V1C_DF038 / EDC16CP33_V54_DF038 / EDC16CP33_V20_DF038 / EDC16CP33_V58_DF038 / EDC16CP33_V5C_DF038 / EDC16CP33_V24_DF038 / EDC16CP33_V04_DF038 / EDC16CP33_V08_DF038 / EDC16CP33_V44_DF038 / EDC16CP33_V4C_DF038 / EDC16CP33_V34_DF038 / EDC16CP33_V38_DF038 / EDC16CP33_V74_DF038 / EDC16CP33_V28_DF038 / EDC16CP33_V62_DF038/ EDC16CP33_V26_DF038 / EDC16CP33_V60_DF038

GETtheMANUALS.org

DF038 CONTINUED	

2.DEF	*NOTES*	None.

Check the condition of the engine management computer connector (see **Wiring Diagram Technical Note, Laguna II ph2, Vel Satis ph2, Espace IV ph2, Mégane II ph2, Scénic II ph2, component code 120**).
If the fault is still present contact Techline.

3.DEF	*NOTES*	**Priorities when dealing with a number of faults**: Deal with faults **DF047 Computer supply voltage** or **DF046 Battery voltage** first if they are present or stored.

If either of faults **DF047 Computer supply voltage** or **DF046 Battery voltage** is **present** or **stored,** clear the fault after dealing with **DF046** or **DF047.**
If the fault is still present, contact the Techline.

AFTER REPAIR	Deal with any other faults. Clear the fault memory. Switch off the ignition until the end of the power-latch phase, and carry out a road test followed by a check with the **diagnostic tool**.

GETtheMANUALS.org

DF046 PRESENT OR STORED	BATTERY VOLTAGE 1.DEF: Above maximum threshold 2.DEF: Below minimum threshold 3.DEF: Initialisation not done.

NOTES	**Conditions for applying the fault finding procedure to a stored fault:** If the fault is declared **present** after: – starting the engine, – a road test.
	Special notes: Computer operating voltage: **6 V < operating voltage < 16.5 V**. It is then not possible to start the engine. Use bornier **Elé. 1681** for any operations on the injection computer connectors.
	Use the **Wiring Diagram Technical Note, Laguna II ph2, Vel Satis ph2, Espace IV ph2, Mégane II ph2, Scénic II ph2**.

1.DEF	***NOTES***	None.

Check the charging circuit; apply **Technical Note 6014A Checking the charging circuit**.
Carry out the necessary repairs.

AFTER REPAIR	Deal with any other faults. Clear the fault memory. Switch off the ignition until the end of the power-latch phase, and carry out a road test followed by a check with the **diagnostic tool**.

EDC16CP33_V18_DF046 / EDC16CP33_V1C_DF046 / EDC16CP33_V54_DF046 / EDC16CP33_V20_DF046 / EDC16CP33_V58_DF046 / EDC16CP33_V5C_DF046 / EDC16CP33_V24_DF046 / EDC16CP33_V04_DF046 / EDC16CP33_V08_DF046 / EDC16CP33_V44_DF046 / EDC16CP33_V4C_DF046 / EDC16CP33_V34_DF046 / EDC16CP33_V38_DF046 / EDC16CP33_V74_DF046 / EDC16CP33_V28_DF046 / EDC16CP33_V62_DF046/ EDC16CP33_V26_DF046 / EDC16CP33_V60_DF046

GETtheMANUALS.org

DF046 CONTINUED	

2.DEF	*NOTES*	None.

Using a voltmeter, take a reading of the battery **voltage** at its terminals.
Compare this value with the value displayed by the **diagnostic tool PR074 Battery voltage**.
If there is no difference (less than **1 V**):
– Recharge and test the battery. If it is faulty, replace it.
– Check the charging circuit: **Technical Note 6014A Checking the charging circuit**.
If there is a difference (greater than **1 V**):
– Check the tightness and the condition of the battery terminals.
Using the appropriate wiring diagram:
– Check **the continuity** and **absence of interference resistance** on the following connection:

- **3FB** between components **120** and **983** or **1337**.

Check the conformity of the **earths** on connections **NT** of component **120**.

If the connection or connections are faulty and if there is a repair method (see **Technical Note 6015A, Electrical wiring repair, Wiring: Precautions for repair**), repair the wiring, otherwise replace the wiring.

3.DEF	*NOTES*	Only deal with this fault when it is **present.**

Switch off the ignition, wait for the **diagnostic tool** message (maximum wait **8 min**): **Loss of dialogue with the computer: EDC16 CP33, check the tool connection and the computer supply voltage** then switch on the ignition again and check whether the fault is still **present.**

If the fault is still present, contact the Techline.

AFTER REPAIR	Deal with any other faults. Clear the fault memory. Switch off the ignition until the end of the power-latch phase, and carry out a road test followed by a check with the **diagnostic tool**.

GETtheMANUALS.org

DF047 PRESENT OR STORED	COMPUTER SUPPLY VOLTAGE 1.DEF: Voltage outside permitted range of values

NOTES	**Conditions for applying the fault finding procedure to a stored fault:** If the fault is declared present after: – starting the engine, – a road test.
	Special notes: Use bornier **Elé.1681** for any operations on the injection computer connectors.
	Use the **Wiring Diagram Technical Note, Laguna II ph2, Vel Satis ph2, Espace IV ph2, Mégane II ph2, Scénic II ph2**.

Check the tightness and the condition of the battery terminals.

Using the appropriate wiring diagram:
– Check **the continuity** and **absence of interference resistance** on the following connection:

• **3FB** between components **120** and **983** or **1337**.

Check the conformity of the **earths** on connections **NT** of component **120**.

If the connection or connections are faulty and if there is a repair method (see **Technical Note 6015A, Electrical wiring repair, Wiring: Precautions for repair**), repair the wiring, otherwise replace the wiring.

AFTER REPAIR	Deal with any other faults. Clear the fault memory. Switch off the ignition until the end of the power-latch phase, and carry out a road test followed by a check with the **diagnostic tool**.

GETtheMANUALS.org

DF051 STORED	CRUISE CONTROL/SPEED LIMITER 1.DEF: Cruise control/speed limiter steering wheel control

NOTES	**Priority when dealing with a number of faults:** **– DF196 Pedal sensor circuit gang 1** **– DF198 Pedal sensor circuit gang 2.**
	Conditions for applying the fault finding procedure to a stored fault: If the fault is declared **present** after: – a road test with activation of the cruise control/speed limiter function, – the engine is started.
	Special notes: If the fault is **present**: – the cruise control/speed limiter function is switched off. Use bornier **Elé. 1681** for any operations on the injection computer connectors.
	Use the **Wiring Diagram Technical Note, Laguna II ph2, Vel Satis ph2, Espace IV ph2, Mégane II ph2, Scénic II ph2**.

If the wiring of the particle filter downstream temperature sensor, component code **1288**, is present (with or without the sensor being present), check the electrical insulation in relation to **+ 12 V** between the following connections:

– **3XU** between components **120** and **1288**,
– **3TG** between components **120** and **1288**.
If the connection or connections are faulty and there is a repair procedure (see **Technical Note 6015A, Electrical wiring repair, Wiring: Precautions for repair**), repair the wiring, otherwise replace it.

AFTER REPAIR	Deal with any other faults. Clear the fault memory. Switch off the ignition until the end of the power-latch phase, and carry out a road test followed by a check with the **diagnostic tool**.

EDC16CP33_V18_DF051M / EDC16CP33_V1C_DF051M / EDC16CP33_V54_DF051M / EDC16CP33_V20_DF051M / EDC16CP33_V58_DF051M / EDC16CP33_V5C_DF051M / EDC16CP33_V24_DF051M / EDC16CP33_V04_DF051M / EDC16CP33_V08_DF051M / EDC16CP33_V44_DF051M / EDC16CP33_V4C_DF051M / EDC16CP33_V34_DF051M / EDC16CP33_V38_DF051M / EDC16CP33_V74_DF051M / EDC16CP33_V28_DF051M / EDC16CP33_V62_DF051M / EDC16CP33_V26_DF051M / EDC16CP33_V60_DF051M

GETtheMANUALS.org

DF051 CONTINUED	

Check the conformity of the steering wheel controls as follows: disconnect connector **689** under the centre cover of the steering wheel (ohmmeter connected on the steering wheel control side). The measurement should read:

- **890 Ω < X < 910 Ω** when the **Resume** button is pressed.
(or the one-touch switch **R** on the right-hand side of the steering wheel)
- **0 Ω < X < 0.8 Ω** when the **Suspend** button is pressed.
(or the one-touch switch **O** on the right-hand side of the steering wheel)
- **290 Ω < X < 310 Ω** when the **Set +** button is pressed.
(or the one-touch switch on the left of the steering wheel)
- **90 Ω < X < 110 Ω** when the **Set -** button is pressed.
(or the one-touch switch on the left of the steering wheel)
- **Infinite resistance** in rest position.

– If the values are not correct, replace the controls on the steering wheel.
– If the values are correct, take the same measurements on connections **86G** and **86M** from component **120** (**steering wheel control connector connected**).

If the connection or connections are faulty and if there is a repair method (see **Technical Note 6015A, Electrical wiring repair, Wiring: Precautions for repair**), repair the wiring, otherwise replace the wiring.
If the values are correct, clear the fault, switch off the ignition, wait for the **diagnostic tool** message (maximum wait **8 min**): **Loss of dialogue with the computer: EDC16 CP33, check the tool connection and the computer supply voltage** and switch on the ignition again.
If the fault is still present (after pressing the steering wheel controls), contact the Techline.

AFTER REPAIR	Deal with any other faults. Clear the fault memory. Switch off the ignition until the end of the power-latch phase, and carry out a road test followed by a check with the **diagnostic tool**.

GETtheMANUALS.org

DF052 PRESENT OR STORED	INJECTORS CONTROL CIRCUIT CC.0: Short circuit to earth CC.1: Short circuit to + 12 volts CC: Short circuit

NOTES	**Conditions for applying the fault finding procedure to a stored fault:** the fault becomes **present** after: – the ignition is switched on. – the engine is started.
	Special notes: If the fault is **present**: – the level 2 warning light is lit, – the engine stops. Use bornier **Elé. 1681** for all operations on the engine management computer connectors.
	Use the **Wiring Diagram Technical Note, Laguna II ph2, Vel Satis ph2, Espace IV ph2, Mégane II ph2, Scénic II ph2**.
	IMPORTANT: – cylinder no.1 is located at the timing end. – do not disconnect the injectors when the engine is running. – please observe the cleanliness guidelines and safety advice.

Check the condition and connection of the injector connectors (see **Wiring Diagram Technical Note, Laguna II ph2, Vel Satis ph2, Espace IV ph2, Mégane II ph2, Scénic II ph2, component codes 193, 194, 195, 196**).
Check the condition and connection of the engine management computer connector (see **Wiring Diagram Technical Note, Laguna II ph2, Vel Satis ph2, Espace IV ph2, Mégane II ph2, Séenic II ph2, component code 120**).
If the connector or connectors are faulty and if there is a repair procedure (see **Technical Note 6015A, Repairing electrical wiring, Wiring: Precautions for repair**), repair the connector, otherwise replace the wiring.

AFTER REPAIR	Deal with any other faults. Clear the fault memory. Switch off the ignition until the end of the power-latch phase, and carry out a road test followed by a check with the **diagnostic tool**.

GETtheMANUALS.org

DF052 CONTINUED	

Check the **continuity**, **insulation** and the **absence of interference resistance** on the following connections:
- **3KW** between components **120** and **193**,
- **3CR** between components **120** and **193,**
- **3KX** between components **120** and **194**,
- **3CS** between components **120** and **194**,
- **3KY** between components **120** and **195**,
- **3CT** between components **120** and **195**,
- **3KZ** between components **120** and **196**,
- **3CU** between components **120** and **196**.

If the connection or connections are faulty and if there is a repair method (see **Technical Note 6015A, Electrical wiring repair, Wiring: Precautions for repair**), repair the wiring, otherwise replace the wiring.

Check for the **absence of a short circuit** between **the earth** (injector body) and the following connections using a multimeter in the ohmmeter setting:
- **3KW** of component **193**
- **3CR** of component **193**
- **3KX** of component **194**
- **3CS** of component **194**
- **3KY** of component **195**
- **3CT** of component **195**
- **3KZ** of component **196**
- **3CU** of component **196**.

If the check is not correct, replace the faulty injector(s) (see **MR 402 (Vel Satis ph2), MR 395 (Laguna II ph2), MR 364 (Mégane II ph2), MR 370 (Scénic II ph2), MR 405 (Espace IV ph2) Mechanical, 13B Diesel injection, Diesel injector, Removal - Refitting** and consult the section **Replacement of components**).

If the fault is still present, contact the Techline.

AFTER REPAIR	Deal with any other faults. Clear the fault memory. Switch off the ignition until the end of the power-latch phase, and carry out a road test followed by a check with the **diagnostic tool**.

GETtheMANUALS.org

DF054 PRESENT OR STORED	TURBOCHARGING SOLENOID VALVE CONTROL CIRCUIT CO: open circuit CC.1: short-circuit to + 12 V CC.0: Short circuit to earth 1.DEF: Internal electronic fault

NOTES	**Priorities when dealing with a number of faults:** **– DF046 Battery voltage.**
	Conditions for applying the fault finding procedure to a stored fault: If the fault is declared **present** after: – the ignition is switched on. – starting the engine, – a road test, – actuator command **AC004 Turbocharging solenoid valve**.
	Special notes: If the fault is **present**: – turbocharging is no longer authorised, – the EGR function is inhibited, – the **level 1** and **EOBD (European On Board Diagnostic)** warning lights are lit. Use bornier **Elé.1681** for any work on the injection computer connectors.
	Use the **Wiring Diagram Technical Note, Laguna II ph2, Vel Satis ph2, Espace IV ph2, Mégane II ph2, Scénic II ph2**.

CO	***NOTES***	None.

Check the condition of the turbocharging solenoid valve connector (see **Wiring Diagram Technical Note, Laguna II ph2, Vel Satis ph2, Espace IV ph2, Mégane II ph2, Scénic II ph2, component code 1475**).
Check the condition of the engine management computer connector (see **Wiring Diagram Technical Note, Laguna II ph2, Vel Satis ph2, Espace IV ph2, Mégane II ph2, Scénic II ph2, component code 120**).
If the connector or connectors are faulty and if there is a repair procedure (see **Technical Note 6015A, Repairing electrical wiring, Wiring: Precautions for repair**), repair the connector, otherwise replace the wiring.

AFTER REPAIR	Deal with any other faults. Clear the fault memory. Switch off the ignition until the end of the power-latch phase, and carry out a road test followed by a check with the **diagnostic tool**.

GETtheMANUALS.org

DF054 CONTINUED 1	

Measure the **resistance** between connections **3FB** and **3MG** of component **1475**.
Replace the turbocharging solenoid valve if the resistance measured is greater than **1 k**Ω or less than **6** Ω.

Check **the continuity** of the following connection:
- **3MG** between components **120** and **1475**.

Check **the + 12 V after relay supply** of the turbocharging solenoid valve on the following connection:
- **3FB** of component **1475**.

If the connection or connections are faulty and if there is a repair method (see **Technical Note 6015A, Electrical wiring repair, Wiring: Precautions for repair**), repair the wiring, otherwise replace the wiring.

If the fault is still present, replace the turbocharging solenoid valve.

CC.1	*NOTES*	None.

Check the condition of the turbocharging solenoid valve connector (see **Wiring Diagram Technical Note, Laguna II ph2, Vel Satis ph2, Espace IV ph2, Mégane II ph2, Scénic II ph2, component code 1475**).
Check the condition of the engine management computer connector (see **Wiring Diagram Technical Note, Laguna II ph2, Vel Satis ph2, Espace IV ph2, Mégane II ph2, Scénic II ph2, component code 120**).
If the connector or connectors are faulty and if there is a repair procedure (see **Technical Note 6015A, Repairing electrical wiring, Wiring: Precautions for repair**), repair the connector, otherwise replace the wiring.

Measure the **resistance** between connections **3FB** and **3MG** of component **1475**.
Replace the turbocharging solenoid valve if the resistance measured is greater than **1 k**Ω or less than **6** Ω

Check **the insulation** in relation to **+12 V** of the following connection:
- **3MG** between components **120** and **1475**.

If the connection is faulty and there is a repair procedure (see **Technical Note 6015A, Electrical wiring repair, Wiring: Precautions for repair**), repair the wiring, otherwise replace it.

If the fault is still present, replace the turbocharging solenoid valve.

AFTER REPAIR	Deal with any other faults. Clear the fault memory. Switch off the ignition until the end of the power-latch phase, and carry out a road test followed by a check with the **diagnostic tool**.

GETtheMANUALS.org

DF054 CONTINUED 2	

CC.0	***NOTES***	None.

Check the condition of the turbocharging solenoid valve connector (see **Wiring Diagram Technical Note, Laguna II ph2, Vel Satis ph2, Espace IV ph2, Mégane II ph2, Scénic II ph2, component code 1475**).
Check the condition of the engine management computer connector (see **Wiring Diagram Technical Note, Laguna II ph2, Vel Satis ph2, Espace IV ph2, Mégane II ph2, Scénic II ph2, component code 120**).
If the connector or connectors are faulty and if there is a repair procedure (see **Technical Note 6015A, Repairing electrical wiring, Wiring: Precautions for repair**), repair the connector, otherwise replace the wiring.

Measure the **resistance** between connections **3FB** and **3MG** of component **1475**.
Replace the turbocharging solenoid valve if the resistance measured is greater than **1 k**Ω or less than **6** Ω

Check the **insulation** to **earth** of the following connection:
- **3MG** between components **120** and **1475**.

Check **the + 12 V after relay supply** of the turbocharging solenoid valve on the following connection:
- **3FB** of component **1475**.

If the connection or connections are faulty and if there is a repair method (see **Technical Note 6015A, Electrical wiring repair, Wiring: Precautions for repair**), repair the wiring, otherwise replace the wiring.

If the fault is still present, replace the turbocharging solenoid valve.

AFTER REPAIR	Deal with any other faults. Clear the fault memory. Switch off the ignition until the end of the power-latch phase, and carry out a road test followed by a check with the **diagnostic tool**.

GETtheMANUALS.org

DF054 CONTINUED 3	

1.DEF	*NOTES*	**Special notes:** This fault appears when the computer control section overheats or when command **AC004 "Turbocharging solenoid valve"** is run.

Check the condition of the turbocharging solenoid valve connector (see **Wiring Diagram Technical Note, Laguna II ph2, Vel Satis ph2, Espace IV ph2, Mégane II ph2, Scénic II ph2, component code 1475**).
Check the condition of the engine management computer connector (see **Wiring Diagram Technical Note, Laguna II ph2, Vel Satis ph2, Espace IV ph2, Mégane II ph2, Scénic II ph2, component code 120**).
If the connector or connectors are faulty and if there is a repair procedure (see **Technical Note 6015A, Repairing electrical wiring, Wiring: Precautions for repair**), repair the connector, otherwise replace the wiring.

Measure the **resistance** between connections **3FB** and **3MG** of component **1475**.
Replace the turbocharging solenoid valve if the resistance measured is greater than **1 k**Ω or less than **6** Ω

Check the **continuity** and **absence of interference resistance** on the following connection:
- **3MG** between components **120** and **1475**.

Check **the + 12 V after relay supply** of the turbocharging solenoid valve on the following connection:
- **3FB** of component **1475**.

If the connection or connections are faulty and if there is a repair method (see **Technical Note 6015A, Electrical wiring repair, Wiring: Precautions for repair**), repair the wiring, otherwise replace the wiring.

If the fault is **stored,** clear the fault and run command **AC004**.
If, when command **AC004**, **DF054 Turbocharging solenoid valve control circuit 1.DEF** is **present** or **stored**, contact the Techline.

AFTER REPAIR	Deal with any other faults. Clear the fault memory. Switch off the ignition until the end of the power-latch phase, and carry out a road test followed by a check with the **diagnostic tool**.

GETtheMANUALS.org

DF056 PRESENT OR STORED	AIR FLOW SENSOR CIRCUIT CO.0: Open circuit or short circuit to earth CC.1: Short circuit + 12 volts 1.DEF: Consistent after switching off the ignition

NOTES	**Conditions for applying the fault finding procedure to a stored fault:** If the fault is declared **present** after: – the ignition is switched on. – starting the engine, – a road test, – the ignition is switched off: **1.DEF**.
	Priorities when dealing with a number of faults: **– DF013 Sensor supply voltage no. 3, 1.DEF**
	Special notes: If the fault is **present**: – the **EOBD (European On Board Diagnostic)** warning light is lit, – the **level 1** warning light is lit and turbocharging is no longer authorised for **CO.0** and **CC.1**, – the **level 1** warning light is lit for **1.DEF** (for **Vdiag 20, 24, 58** and **5C**), – the EGR function is inhibited by the engine management computer, – engine torque limited, – safe value **PR132 Air flow = 90 kg/h** at idle speed, – particle filter regeneration is inhibited. Use bornier **Elé. 1681** for all operations on the engine management computer connectors.
	Use the **Wiring Diagram Technical Note, Laguna II ph2, Vel Satis ph2, Espace IV ph2, Mégane II ph2, Scénic II ph2**.

AFTER REPAIR	Deal with any other faults. Clear the fault memory. Switch off the ignition until the end of the power-latch phase, and carry out a road test followed by a check with the **diagnostic tool**.

GETtheMANUALS.org

DF056 CONTINUED 1	

CO.0	*NOTES*	In the event of the simultaneous presence of fault **DF002 Air temperature sensor circuit**, check that the air flow sensor connector is connected correctly.

Check the condition of the air flowmeter connector (see **Wiring Diagram Technical Note, Laguna II ph2, Vel Satis ph2, Espace IV ph2, Mégane II ph2, Scénic II ph2, component code 799**).
Check the condition of the engine management computer connector (see **Wiring Diagram Technical Note, Laguna II ph2, Vel Satis ph2, Espace IV ph2, Mégane II ph2, Scénic II ph2, component code 120**).
If the connector or connectors are faulty and if there is a repair procedure (see **Technical Note 6015A, Repairing electrical wiring, Wiring: Precautions for repair**), repair the connector, otherwise replace the wiring.

Check the **continuity** and **insulation** to **earth** of the following connections:
- **3DV** between components **120** and **799**,
- **3KJ** between components **120** and **799**,
- **3DW** between components **120** and **799**.

If the connection or connections are faulty and there is a repair procedure (see **Technical Note 6015A, Electrical wiring repair, Wiring: Precautions for repair**), repair the wiring, otherwise replace it.

Check the **+ 5 V feed** to the air flowmeter.
- **3KJ** of component **799**.

Check the **+12 V after relay feed** to the air flowmeter.
- **3FB** of component **799**.

If the connection or connections are faulty and if there is a repair method (see **Technical Note 6015A, Electrical wiring repair, Wiring: Precautions for repair**), repair the wiring, otherwise replace the wiring.
Run **Test 5 Air flowmeter**.
With the flowmeter **connected**, the vehicle **ignition on** and **engine stopped**:
Measure the **voltage** between connections **3DW** and **3DV** of component **799**.
Replace the air flowmeter if the voltage is not between **0.3 V < X < 0.7 V**.

If the fault is still present, replace the air flowmeter.

AFTER REPAIR	Deal with any other faults. Clear the fault memory. Switch off the ignition until the end of the power-latch phase, and carry out a road test followed by a check with the **diagnostic tool**.

GETtheMANUALS.org

DF056 CONTINUED 2	

CC.1	*NOTES*	None.

Check the condition of the air flowmeter connector (see **Wiring Diagram Technical Note, Laguna II ph2, Vel Satis ph2, Espace IV ph2, Mégane II ph2, Scénic II ph2, component code 799**).
Check the condition of the engine management computer connector (see **Wiring Diagram Technical Note, Laguna II ph2, Vel Satis ph2, Espace IV ph2, Mégane II ph2, Scénic II ph2, component code 120**).
If the connector or connectors are faulty and if there is a repair procedure (see **Technical Note 6015A, Repairing electrical wiring, Wiring: Precautions for repair**), repair the connector, otherwise replace the wiring.

Check the **insulation** in relation to **+ 12 V** of the following connections:
- **3DV** between components **120** and **799**,
- **3KJ** between components **120** and **799**,
- **3DW** between components **120** and **799**.

Check the **+ 5 V supply** of the air flowmeter on the following connection:
- **3KJ** of component **799**.

Check the **+ 12 V after relay supply** of the air flowmeter on the following connection:
- **3FB** of component **799**.

If the connection or connections are faulty and if there is a repair method (see **Technical Note 6015A, Electrical wiring repair, Wiring: Precautions for repair**), repair the wiring, otherwise replace the wiring.

With the flowmeter **connected**, the vehicle **ignition on** and **engine stopped**:
Measure the **voltage** between connections **3DW** and **3DV** of component **799**.
Replace the air flowmeter if the voltage is not between **0.3 V < X < 0.7 V**.

If the fault is still present, replace the air flowmeter.

AFTER REPAIR	Deal with any other faults. Clear the fault memory. Switch off the ignition until the end of the power-latch phase, and carry out a road test followed by a check with the **diagnostic tool**.

GETtheMANUALS.org

DF056 CONTINUED 3	

1.DEF	*NOTES*	None.

Check the condition of the air flowmeter connector (see **Wiring Diagram Technical Note, Laguna II ph2, Vel Satis ph2, Espace IV ph2, Mégane II ph2, Scénic II ph2, component code 799**).
Check the condition of the engine management computer connector (see **Wiring Diagram Technical Note, Laguna II ph2, Vel Satis ph2, Espace IV ph2, Mégane II ph2, Scénic II ph2, component code 120**).
If the connector or connectors are faulty and if there is a repair procedure (see **Technical Note 6015A, Repairing electrical wiring, Wiring: Precautions for repair**), repair the connector, otherwise replace the wiring.

Check **for continuity** and **absence of interference resistance** of the following connections:
- **3DV** between components **120** and **799**,
- **3KJ** between components **120** and **799**,
- **3DW** between components **120** and **799**.

If the connection or connections are faulty and if there is a repair method (see **Technical Note 6015A, Electrical wiring repair, Wiring: Precautions for repair**), repair the wiring, otherwise replace the wiring.

Check the condition of the flowmeter: no visible damage to the sensing element of the flowmeter.

Use the **Monitool application: MT001 Turbocharging function** to check the entire air line (for **Vdiag 04** and **44**).

If the fault is still present, replace the air flowmeter.

AFTER REPAIR	Deal with any other faults. Clear the fault memory. Switch off the ignition until the end of the power-latch phase, and carry out a road test followed by a check with the **diagnostic tool**.

GETtheMANUALS.org

DF059 PRESENT OR STORED	COMBUSTION MISFIRES ON CYLINDER 1

NOTES	**Conditions for applying the fault finding procedure to a stored fault:** The fault reappears after: – engine speed **PR055 Engine speed** between idle speed and **1050 rpm**, – a coolant temperature **PR064 Coolant temperature** ≥ **20°C**.
	Priorities when dealing with a number of faults: **– DF026 Cylinder 1 injector control circuit** **– DF052 Injector control circuit.**
	Special notes: After an injector has been replaced, run commands **SC002 Enter injector codes** and **SC036 Reinitialise programming** and follow the procedure.
	IMPORTANT: Cylinder no. 1 is located at the timing end. Do not disconnect the injectors when the engine is running. When removing and refitting an injector, respect the cleanliness guidelines and safety advice (see **MR364 (Mégane II ph2), MR370 (Scénic II ph2), MR 395 (Laguna II ph2), 402 (Vel Satis ph2), 405 (Espace IV ph2), Mechanical, 13B Diesel injection, Diesel injectors: Removal - Refitting**).

AFTER REPAIR	Deal with any other faults. Clear the fault memory. Switch off the ignition until the end of the power-latch phase, and carry out a road test followed by a check with the **diagnostic tool**.

GETtheMANUALS.org

DF059 CONTINUED	

Perform **TEST 2 Resolving misfires**.
If the fault is still present, contact the Techline.

AFTER REPAIR	Deal with any other faults. Clear the fault memory. Switch off the ignition until the end of the power-latch phase, and carry out a road test followed by a check with the **diagnostic tool**.

GETtheMANUALS.org

DF060 PRESENT OR STORED	MISFIRING ON CYLINDER 2

NOTES	**Conditions for applying the fault finding procedure to a stored fault:** The fault reappears after: – engine speed **PR055 Engine speed** between idle speed and **1050 rpm**, – a coolant temperature **PR064 Coolant temperature** ≥ **20°C**.
	Priorities when dealing with a number of faults: **– DF027 Cylinder 2 injector control circuit** **– DF052 Injector control circuit.**
	Special notes: After an injector has been replaced, run commands **SC002 Enter injector codes** and **SC036 Reinitialise programming** and follow the procedure.
	IMPORTANT: Cylinder no. 1 is located at the timing end. Do not disconnect the injectors when the engine is running. When removing and refitting an injector, respect the cleanliness guidelines and safety advice (see **MR364 (Mégane II ph2), MR370 (Scénic II ph2), MR 395 (Laguna II ph2), 402 (Vel Satis ph2), 405 (Espace IV ph2), Mechanical, 13B, Diesel injection, Diesel injectors: Removal - Refitting**).

AFTER REPAIR	Deal with any other faults. Clear the fault memory. Switch off the ignition until the end of the power-latch phase, and carry out a road test followed by a check with the **diagnostic tool**.

GETtheMANUALS.org

DF060 CONTINUED	

Perform **TEST 2 Resolving misfires**.
If the fault is still present, contact the Techline.

AFTER REPAIR	Deal with any other faults. Clear the fault memory. Switch off the ignition until the end of the power-latch phase, and carry out a road test followed by a check with the **diagnostic tool**.

GETtheMANUALS.org

DF061 PRESENT OR STORED	MISFIRING ON CYLINDER 3

NOTES	**Conditions for applying the fault finding procedure to a stored fault:** The fault reappears after: – engine speed **PR055 Engine speed** between idle speed and **1050 rpm**, – a coolant temperature **PR064 Coolant temperature** ≥ **20°C**.
	Priorities when dealing with a number of faults: **– DF028 Cylinder 3 injector control circuit** **– DF052 Injector control circuit.**
	Special notes: After an injector has been replaced, run commands **SC002 Enter injector codes** and **SC036 Reinitialise programming** and follow the procedure.
	IMPORTANT: Cylinder no. 1 is located at the timing end. Do not disconnect the injectors when the engine is running. When removing and refitting an injector, respect the cleanliness guidelines and safety advice (see **MR364 (Mégane II ph2), MR370 (Scénic II ph2), MR 395 (Laguna II ph2), 402 (Vel Satis ph2), 405 (Espace IV ph2), Mechanical, 13B Diesel injection, Diesel injectors: Removal - Refitting**).

AFTER REPAIR	Deal with any other faults. Clear the fault memory. Switch off the ignition until the end of the power-latch phase, and carry out a road test followed by a check with the **diagnostic tool**.

GETtheMANUALS.org

DF061 CONTINUED	

Perform **TEST 2 Resolving misfires**.
If the fault is still present, contact the Techline.

AFTER REPAIR	Deal with any other faults. Clear the fault memory. Switch off the ignition until the end of the power-latch phase, and carry out a road test followed by a check with the **diagnostic tool**.

GETtheMANUALS.org

DF062 PRESENT OR STORED	MISFIRING ON CYLINDER 4

NOTES	**Conditions for applying the fault finding procedure to a stored fault:** The fault reappears after: – engine speed **PR055 Engine speed** between idle speed and **1050 rpm**, – a coolant temperature **PR064 Coolant temperature** ≥ **20°C**.
	Priorities when dealing with a number of faults: **– DF029 Cylinder 4 injector control circuit** **– DF052 Injector control circuit.**
	Special notes: After an injector has been replaced, run commands **SC002 Enter injector codes** and **SC036 Reinitialise programming** and follow the procedure.
	IMPORTANT: Cylinder no. 1 is located at the timing end. Do not disconnect the injectors when the engine is running. When removing and refitting an injector, respect the cleanliness guidelines and safety advice (see **MR364 (Mégane II ph2), MR370 (Scénic II ph2), MR 395 (Laguna II ph2), 402 (Vel Satis ph2), 405 (Espace IV ph2), Mechanical, 13B Diesel injection, Diesel injectors: Removal - Refitting**).

AFTER REPAIR	Deal with any other faults. Clear the fault memory. Switch off the ignition until the end of the power-latch phase, and carry out a road test followed by a check with the **diagnostic tool**.

GETtheMANUALS.org

DF062 CONTINUED	

Perform **TEST 2 Resolving misfires**.
If the fault is still present, contact the Techline.

AFTER REPAIR	Deal with any other faults. Clear the fault memory. Switch off the ignition until the end of the power-latch phase, and carry out a road test followed by a check with the **diagnostic tool**.

GETtheMANUALS.org

DF065 PRESENT OR STORED	COMBUSTION MISFIRES 1.DEF: Combustion misfires detected on several cylinders.

NOTES	**Conditions for applying the fault finding procedure to a stored fault:** The fault reappears after: – engine speed **PR055 Engine speed** between idle speed and **1050 rpm**, – a coolant temperature **PR064 Coolant temperature** ≥ **20°C**.
	Priorities when dealing with a number of faults: **– DF052 Injector control circuit** **– DF026 Cylinder 1 injector control circuit** **– DF027 Cylinder 2 injector control circuit** **– DF028 Cylinder 3 injector control circuit** **– DF029 Cylinder 4 injector control circuit**
	IMPORTANT: When removing and refitting an injector, respect the cleanliness guidelines and safety advice (see **MR364 (Mégane II ph2), MR370 (Scénic II ph2), MR 395 (Laguna II ph2), 402 (Vel Satis ph2), 405 (Espace IV ph2), Mechanical, 13B Diesel injection, Diesel injectors: Removal - Refitting**).

Perform **TEST 2 Resolving misfires**.
If the fault is still present, contact the Techline.

AFTER REPAIR	Deal with any other faults. Clear the fault memory. Switch off the ignition until the end of the power-latch phase, and carry out a road test followed by a check with the **diagnostic tool**.

GETtheMANUALS.org

DF066 PRESENT OR STORED	INJECTOR(S) CODE(S) 1.DEF: No code stored 2.DEF: Configuration/Initialisation

NOTES	**Special notes:** If the fault is **present**: – the injection flow will be limited, – engine torque limited, resulting in a maximum engine speed of **1500 rpm**, – the **level 1** warning light is illuminated.

1.DEF	***NOTES***	**Special notes:** This fault appears when an incorrect injector code is entered from command **SC002 Enter injector codes**. The **IMA*** codes must be read from left to right.

Check the injector codes and reprogram the correct codes using command **SC002 Enter injector codes**, see **Interpretation of commands**.
(Consult the procedures defined in the **Interpretation of commands** section).

– After the codes have been written:
– Switch off the ignition.
– Wait for the **diagnostic tool** message (maximum wait **8 minutes**): **Loss of dialogue with the computer: EDC16 CP33, check the tool connection and the computer supply** before switching the ignition back on.
– Establish dialogue and clear the fault memory.
– End of the procedure.

AFTER REPAIR	Deal with any other faults. Clear the fault memory. Switch off the ignition until the end of the power-latch phase, and carry out a road test followed by a check with the **diagnostic tool**.

GETtheMANUALS.org

DF066 CONTINUED 1	

WARNING:
If fault **DF066** is still **present** after the injector codes have been entered, check that power latch occurs each time the ignition is switched off:
– Switch off the ignition.
– Wait for the **diagnostic tool** message (maximum wait **8 min**): **Loss of dialogue with the computer: EDC16 CP33, check the tool connection and the computer supply voltage** and switch on the ignition again.
– Establish dialogue.

If the fault has become ***stored***, clear the fault memory and end the operation.

If the fault is still present, contact the Techline.

IMA*: Individual injector correction

2.DEF	*NOTES*	**Conditions for applying the fault finding procedure to a stored fault:** The fault is declared present after: – the injection computer has been replaced, – reprogramming.

This fault is **present** on all blank computers (new or after reprogramming).

– Program the injector codes using:
– either command **SC001 Write saved data**,
– or command **SC002 Enter injector codes** or **Interpretation of commands**.
The **IMA*** codes must be read from left to right.

(Consult the procedures defined in the **Interpretation of commands** section).

IMA*: Individual injector correction

AFTER REPAIR	Deal with any other faults. Clear the fault memory. Switch off the ignition until the end of the power-latch phase, and carry out a road test followed by a check with the **diagnostic tool**.

GETtheMANUALS.org

DF066 CONTINUED 2	

– After the codes have been written:
– Switch off the ignition.
– Wait for the **diagnostic tool** message (maximum wait **8 min**): **Loss of dialogue with the computer: EDC16 CP33, check the tool connection and the computer supply voltage** and switch on the ignition again.
– Establish dialogue and clear the fault memory.

End of the procedure.

WARNING:
If fault **DF066** is still **present** after the injector codes have been entered, check that power latch occurs each time the ignition is switched off:
– Switch off the ignition.
– Wait for the **diagnostic tool** message (maximum wait **8 min**): **Loss of dialogue with the computer: EDC16 CP33, check the tool connection and the computer supply voltage** and switch on the ignition again.
– Establish dialogue.

If the fault is still present, contact the Techline.

IMA*: Individual injector correction

AFTER REPAIR	Deal with any other faults. Clear the fault memory. Switch off the ignition until the end of the power-latch phase, and carry out a road test followed by a check with the **diagnostic tool**.

GETtheMANUALS.org

DF069 PRESENT OR STORED	IMPACT DETECTED SIGNAL

NOTES	**Conditions for applying the fault finding procedure to stored faults:** The fault is declared present under **+ after ignition feed**.
	Special notes: As soon as the injection computer receives this signal: – engine operation is prohibited, the **level 2** warning light is lit.

The fault appears when the injection computer receives a frontal impact signal from the Airbag computer via the multiplex network.

Do not deal with this fault.

If the vehicle has been involved in an accident:
Carry out any necessary repairs,
– clear the fault,
– switch off the ignition,
– wait for **1 minute**,
– switch on the ignition.
If the fault does not reappear, end of fault finding procedure.
If the fault recurs, run fault finding on the **AIRBAG** computer.

If the vehicle has not been involved in an accident:
Run fault finding on the **AIRBAG computer (see 88C, Airbag and pretensioner)**.

AFTER REPAIR	Deal with any other faults. Clear the fault memory. Switch off the ignition until the end of the power-latch phase, and carry out a road test followed by a check with the **diagnostic tool**.

GETtheMANUALS.org

DF086 PRESENT OR STORED	COOLANT PUMP RELAY CONTROL CIRCUIT CO: Open circuit CC.0: Short circuit to earth CC.1: Short-circuit on +12 volts. 1.DEF: Internal electronic fault

NOTES	**Conditions for applying the fault finding procedure to a stored fault:** If the fault becomes **present** after: – the ignition is switched on. – starting the engine, – a road test.
	Special notes: The control relay is located in the engine compartment connection unit. Use bornier **Elé. 1681** for all operations on the engine management computer connectors.
	Use the **Wiring Diagram Technical Note, Laguna II ph2, Vel Satis ph2, Espace IV ph2, Mégane II ph2, Scénic II ph2**.

CO	***NOTES***	None.

Check the condition of the coolant pump relay mounting connector on the engine fuse box (see **Wiring Diagram Technical Note, Laguna II ph2, Vel Satis ph2, Espace IV ph2, Mégane II ph2, Scénic II ph2, component code 597**).
Check the condition of the engine management computer connector (see **Wiring Diagram Technical Note, Laguna II ph2, Vel Satis ph2, Espace IV ph2, Mégane II ph2, Scénic II ph2, component code 120**).
If the connector or connectors are faulty and if there is a repair procedure (see **Technical Note 6015A, Repairing electrical wiring, Wiring: Precautions for repair**), repair the connector, otherwise replace the wiring.

Check the conformity of the coolant pump relay (relay removed):
- **Insulation** between connections **3FB** and **3VH** of component **573.**
- Measure the **resistance** between connections **3AAZ** and **3FB** of component **573.**

Replace the relay if the resistance of the coolant pump relay is greater than **1 k**Ω or less than **6** Ω.

AFTER REPAIR	Deal with any other faults. Clear the fault memory. Switch off the ignition until the end of the power-latch phase, and carry out a road test followed by a check with the **diagnostic tool**.

EDC16CP33_V18_DF086 / EDC16CP33_V1C_DF086 / EDC16CP33_V20_DF086 / EDC16CP33_V24_DF086 / EDC16CP33_V26_DF086 / EDC16CP33_V28_DF086 / EDC16CP33_V54_DF086 / EDC16CP33_V58_DF086 / EDC16CP33_V5C_DF086 / EDC16CP33_V60_DF086 / EDC16CP33_V62_DF086

GETtheMANUALS.org

DF086 CONTINUED 1	

Check the **continuity** of the following connections:
- **3AAZ** between components **120** and **573,**
- **3VH** between components **573** and **369**,
- **M** between components **369** and the vehicle **earth**.

Check the **+ 12 V after relay supply** to the coolant pump relay:
- **3FB** of component **573**.

If the connection or connections are faulty and if there is a repair method (see **Technical Note 6015A, Electrical wiring repair, Wiring: Precautions for repair**), repair the wiring, otherwise replace the wiring.

CC.1	*NOTES*	None.

Check the condition of the coolant pump relay mounting connector on the engine fuse box (see **Wiring Diagram Technical Note, Laguna II ph2, Vel Satis ph2, Espace IV ph2, Mégane II ph2, Scénic II ph2, component code 597**).
Check the condition of the engine management computer connector (see **Wiring Diagram Technical Note, Laguna II ph2, Vel Satis ph2, Espace IV ph2, Mégane II ph2, Scénic II ph2, component code 120**).
If the connector or connectors are faulty and if there is a repair procedure (see **Technical Note 6015A, Repairing electrical wiring, Wiring: Precautions for repair**), repair the connector, otherwise replace the wiring.

Check the conformity of the coolant pump relay (relay removed):
- **Insulation** between connections **3FB** and **3VH** of component **573.**
- Measure the **resistance** between connections **3AAZ** and **3FB** of component **573.**

Replace the relay if the resistance of the coolant pump relay is greater than **1 k**Ω or less than **6** Ω.

Check the **insulation** from **+ 12 V** of the following connections:
- **3AAZ** between components **120** and **573,**
- **3VH** between components **573** and **369.**

If the connection or connections are faulty and if there is a repair method (see **Technical Note 6015A, Electrical wiring repair, Wiring: Precautions for repair**), repair the wiring, otherwise replace the wiring.

AFTER REPAIR	Deal with any other faults. Clear the fault memory. Switch off the ignition until the end of the power-latch phase, and carry out a road test followed by a check with the **diagnostic tool**.

GETtheMANUALS.org

DF086 CONTINUED 2	

CC.0	*NOTES*	None.

Check the condition of the coolant pump relay mounting connector on the engine fuse box (see **Wiring Diagram Technical Note, Laguna II ph2, Vel Satis ph2, Espace IV ph2, Mégane II ph2, Scénic II ph2, component code 597**).
Check the condition of the engine management computer connector (see **Wiring Diagram Technical Note, Laguna II ph2, Vel Satis ph2, Espace IV ph2, Mégane II ph2, Scénic II ph2, component code 120**).
If the connector or connectors are faulty and if there is a repair procedure (see **Technical Note 6015A, Repairing electrical wiring, Wiring: Precautions for repair**), repair the connector, otherwise replace the wiring.

Check the conformity of the coolant pump relay (relay removed):
- **Insulation** between connections **3FB** and **3VH** of component **573.**
- Measure the **resistance** between connections **3AAZ** and **3FB** of component **573.**

Replace the relay if the resistance of the coolant pump relay is greater than **1 k**Ω or less than **6** Ω.

Check the **insulation** to **earth** of the following connections:
- **3AAZ** between components **120** and **573,**
- **3VH** between components **573** and **369.**

Check the **+ 12 V after relay supply** to the coolant pump relay on the following connection:
- **3FB** of component **573**.

If the connection or connections are faulty and if there is a repair method (see **Technical Note 6015A, Electrical wiring repair, Wiring: Precautions for repair**), repair the wiring, otherwise replace the wiring.

AFTER REPAIR	Deal with any other faults. Clear the fault memory. Switch off the ignition until the end of the power-latch phase, and carry out a road test followed by a check with the **diagnostic tool**.

GETtheMANUALS.org

DF086 CONTINUED 3	

1.DEF	***NOTES***	**Special note:** This fault appears when the computer control section has overheated.

Check the condition of the coolant pump relay mounting connector on the engine fuse box (see **Wiring Diagram Technical Note, Laguna II ph2, Vel Satis ph2, Espace IV ph2, Mégane II ph2, Scénic II ph2, component code 597**).
Check the condition of the engine management computer connector (see **Wiring Diagram Technical Note, Laguna II ph2, Vel Satis ph2, Espace IV ph2, Mégane II ph2, Scénic II ph2, component code 120**).
If the connector or connectors are faulty and if there is a repair procedure (see **Technical Note 6015A, Repairing electrical wiring, Wiring: Precautions for repair**), repair the connector, otherwise replace the wiring.

Check the conformity of the coolant pump relay (relay removed):
- **Insulation** between connections **3FB** and **3VH** of component **573.**
- Measure the **resistance** between connections **3AAZ** and **3FB** of component **573.**

Replace the relay if the resistance of the coolant pump relay is greater than **200** Ω or less than **20** Ω.

Check **the absence of interference resistance** of the following connection:
- **3AAZ** between components **120** and **573.**

Check the **+ 12 V after relay supply** to the coolant pump relay on the following connection:
- **3FB** of component **573**.

Check the **+ 12 V battery supply** to the coolant pump relay on the following connection:
- **3FB** of component **573**.

If the connection or connections are faulty and if there is a repair method (see **Technical Note 6015A, Electrical wiring repair, Wiring: Precautions for repair**), repair the wiring, otherwise replace the wiring.

If the fault is still present, contact the Techline.

AFTER REPAIR	Deal with any other faults. Clear the fault memory. Switch off the ignition until the end of the power-latch phase, and carry out a road test followed by a check with the **diagnostic tool**.

GETtheMANUALS.org

DF091 STORED	VEHICLE SPEED SIGNAL 1.DEF: Vehicle speed too high.

NOTES	**Conditions for applying the fault finding procedure to a stored fault:** If the fault is declared **present** after a road test.
	Special notes: – the vehicle speed signal sent by the ABS computer to the injection computer is greater than the threshold defined in the calibration, – use bornier **Elé.1681** for any operations on the injection computer connectors.
	Use the **Wiring Diagram Technical Note, Laguna II ph2, Vel Satis ph2, Espace IV ph2, Mégane II ph2, Scénic II ph2**.

Check the condition of the ABS computer connector (see **Wiring Diagram Technical Note, Laguna II ph2, Vel Satis ph2, Espace IV ph2, Mégane II ph2, Scénic II ph2, component code 1094**).
Check the condition of the engine management computer connector (see **Wiring Diagram Technical Note, Laguna II ph2, Vel Satis ph2, Espace IV ph2, Mégane II ph2, Scénic II ph2, component code 120**).
If the connector or connectors are faulty and there is a repair procedure (see **Technical Note 6015A, Electrical wiring repair, Wiring: Precautions for repair**), repair the connector, otherwise replace the wiring.

Run complete fault finding on the ABS computer (see **38C, Anti-lock braking system**).

Run complete fault finding on the multiplex network (see **88B, Multiplexing**).

If the fault is still present, contact the Techline.

AFTER REPAIR	Deal with any other faults. Clear the fault memory. Switch off the ignition until the end of the power-latch phase, and carry out a road test followed by a check with the **diagnostic tool**.

GETtheMANUALS.org

DF098 PRESENT OR STORED	FUEL TEMPERATURE SENSOR CIRCUIT CC.0: Short circuit to earth CO.1: Open circuit or short circuit to +12 V

NOTES	**Conditions for applying the fault finding procedure to a stored fault:** If the fault is declared **present** when the ignition is switched on.
	Special notes: If the fault is **present,** – fuel temperature safe value **PR063 Fuel temperature = 100°C**, – use bornier **Elé. 1681** for all operations on the engine management computer connectors.
	Use the **Wiring Diagram Technical Note, Laguna II ph2, Vel Satis ph2, Espace IV ph2, Mégane II ph2, Scénic II ph2**.

CC.0	***NOTES***	None.

Check the condition of the fuel temperature sensor connector (see **Wiring Diagram Technical Note, Laguna II ph2, Vel Satis ph2, Espace IV ph2, Mégane II ph2, Scénic II ph2, component code 1066**).
Check the condition of the engine management computer connector (see **Wiring Diagram Technical Note, Laguna II ph2, Vel Satis ph2, Espace IV ph2, Mégane II ph2, Scénic II ph2, component code 120**).
If the connector or connectors are faulty and if there is a repair procedure (see **Technical Note 6015A, Repairing electrical wiring, Wiring: Precautions for repair**), repair the connector, otherwise replace the wiring.

Measure the **resistance** between connections **3FAB** and **3LD** of component **1066**.
Replace the fuel temperature sensor if its resistance is less than **85** Ω or greater than **50 k**Ω**.**

Check the **insulation** to **earth** of the following connection:
- **3FAB** between components **120** and **1066**.

If the connection is faulty and there is a repair procedure (see **Technical Note 6015A, Electrical wiring repair, Wiring: Precautions for repair**), repair the wiring, otherwise replace it.

AFTER REPAIR	Deal with any other faults. Clear the fault memory. Switch off the ignition until the end of the power-latch phase, and carry out a road test followed by a check with the **diagnostic tool**.

GETtheMANUALS.org

DF098 CONTINUED	

CO.1	*NOTES*	None.

If the wiring of the particle filter downstream temperature sensor, component code **1288**, is present (with or without the sensor being present), check the electrical insulation in relation to **+ 12 V** between the following connections:

– **3XU** between components **120** and **1288**,
– **3TG** between components **120** and **1288**.
If the connection or connections are faulty and there is a repair procedure (see **Technical Note 6015A, Electrical wiring repair, Wiring: Precautions for repair**), repair the wiring, otherwise replace it.

Check the condition of the fuel temperature sensor connector (see **Wiring Diagram Technical Note, Laguna II ph2, Vel Satis ph2, Espace IV ph2, Mégane II ph2, Scénic II ph2, component code 1066**).
Check the condition of the engine management computer connector (see **Wiring Diagram Technical Note, Laguna II ph2, Vel Satis ph2, Espace IV ph2, Mégane II ph2, Scénic II ph2, component code 120**).
If the connector or connectors are faulty and if there is a repair procedure (see **Technical Note 6015A, Repairing electrical wiring, Wiring: Precautions for repair**), repair the connector, otherwise replace the wiring.

Measure the **resistance** between connections **3FAB** and **3LD** of component **1066**.
Replace the fuel temperature sensor if its resistance is less than **85** Ω or greater than **50 k**Ω.

Check **the continuity** of the following connections:
- **3FAB** between components **120** and **1066**,
- **3LD** between components **120** and **1066.**

Check **the insulation** in relation to **+12 V** of the following connection:
- **3FAB** between components **120** and **1066**.

If the connection or connections are faulty and if there is a repair method (see **Technical Note 6015A, Electrical wiring repair, Wiring: Precautions for repair**), repair the wiring, otherwise replace the wiring.

AFTER REPAIR	Deal with any other faults. Clear the fault memory. Switch off the ignition until the end of the power-latch phase, and carry out a road test followed by a check with the **diagnostic tool**.

GETtheMANUALS.org

DF107 PRESENT OR STORED	COMPUTER MEMORY 1.DEF: Internal electronic fault

NOTES	**Conditions for applying the fault finding procedure to a stored fault:** If the fault is declared **present** after: – a road test followed by a power latch phase.
	Special notes: The **level 1** and **EOBD (European On Board Diagnostic)** warning lights are lit.

If the fault is **stored**, clear the fault from the computer memory.

In the main screen of the **CLIP diagnostic tool**, note the injector codes.
Clear the computer memory using command **RZ034 Computer memory.**

Switch off the ignition, wait for the **diagnostic tool** message (maximum wait **8 min**): **Loss of dialogue with the computer: EDC16 CP33, check the tool connection and the computer supply voltage** then switch on the ignition again.
Switch on the ignition and re-establish dialogue.

If the fault is still present, contact the Techline.

If the fault is no longer present, carry out the programming (see Programming).
Switch off the ignition, wait for the **diagnostic tool** message (maximum wait **8 min**): **Loss of dialogue with the computer: EDC16 CP33, check the tool connection and the computer supply voltage** then switch on the ignition again.

For vehicles equipped with a particle filter:
– Check the exhaust pipe for leaks or blockage. Repair if necessary.
– Carry out a particle filter regeneration using command **SC017 Particle filter regeneration** (see **Interpretation of commands**) and perform an oil change if the vehicle is not new.

AFTER REPAIR	Deal with any other faults. Clear the fault memory. Switch off the ignition until the end of the power-latch phase, and carry out a road test followed by a check with the **diagnostic tool**.

GETtheMANUALS.org

DF119 PRESENT OR STORED	CAMSHAFT SENSOR SIGNAL 1.DEF: No camshaft signal or timing fault (tension or setting) 2.DEF: Supply fault, signal interference, camshaft sensor internal fault

NOTES	**Conditions for applying the fault finding procedure to a stored fault:** If the fault is declared **present** after: – starting the engine, – a road test.
	Special notes: – the **level 1** warning light is lit. Use bornier **Elé.1681** for any operations on the injection computer connectors.
	Use the **Wiring Diagram Technical Note, Laguna II ph2, Vel Satis ph2, Espace IV ph2, Mégane II ph2, Scénic II ph2**.

1.DEF	***NOTES***	None.

Check the condition of the camshaft sensor connector (see **Wiring Diagram Technical Note, Laguna II ph2, Vel Satis ph2, Espace IV ph2, Mégane II ph2, Scénic II ph2, component code 746**).
Check the condition of the engine management computer connector (see **Wiring Diagram Technical Note, Laguna II ph2, Vel Satis ph2, Espace IV ph2, Mégane II ph2, Scénic II ph2, component code 120**).
If the connector or connectors are faulty and if there is a repair procedure (see **Technical Note 6015A, Repairing electrical wiring, Wiring: Precautions for repair**), repair the connector, otherwise replace the wiring.

If the fault is **stored**:
Visually check the condition of the surrounding area.
If, on detection of the fault, the engine speed is considerably lower than the idling speed (less than **150 rpm**) and no customer complaint is declared (warning light indicated by the customer does not come on and vehicle can be started), the fault was detected because the engine had stalled.
Clear the fault and carry out a road test.

AFTER REPAIR	Deal with any other faults. Clear the fault memory. Switch off the ignition until the end of the power-latch phase, and carry out a road test followed by a check with the **diagnostic tool**.

GETtheMANUALS.org

DF119 CONTINUED 1	

Note:
Measure the **resistance** between the connections indicated without producing a short circuit between the connections.

1. Disconnect the sensor before measuring the resistance with an Ohmmeter or multimeter.
2. Resistance between connections **3CQ** and **3FB** of component **746** (signal and supply) must be between **7.2 kΩ** and **13.4 kΩ** (**10.2 kΩ** nominal).
3. The resistance between connections **3PL** and **3FB** of component **746** (earth and supply) must be greater than **100 kΩ**.
4. The resistance between connections **3PL** and **3CQ** of component **746** (earth and signal) must be greater than **100 kΩ**.

If the values are incorrect, replace the camshaft sensor.

Check the **continuity** of the following connections:
- **3PL** between components **120** and **746**,
- **3CQ** between components **120** and **746.**

Check the **+ 12 V after relay feed** to the camshaft sensor on the following connection:
- **3FB** of component **746**.

If the connection or connections are faulty and if there is a repair method (see **Technical Note 6015A, Electrical wiring repair, Wiring: Precautions for repair**), repair the wiring, otherwise replace the wiring.

If the fault is still present, replace the camshaft sensor.

2.DEF	*NOTES*	**Priorities when dealing with a number of faults:** **– DF120 Engine speed sensor signal**

Check the condition of the camshaft sensor connector (see **Wiring Diagram Technical Note, Laguna II ph2, Vel Satis ph2, Espace IV ph2, Mégane II ph2, Scénic II ph2, component code 746**).
Check the condition of the engine management computer connector (see **Wiring Diagram Technical Note, Laguna II ph2, Vel Satis ph2, Espace IV ph2, Mégane II ph2, Scénic II ph2, component code 120**).
If the connector or connectors are faulty and if there is a repair procedure (see **Technical Note 6015A, Repairing electrical wiring, Wiring: Precautions for repair**), repair the connector, otherwise replace the wiring.

AFTER REPAIR	Deal with any other faults. Clear the fault memory. Switch off the ignition until the end of the power-latch phase, and carry out a road test followed by a check with the **diagnostic tool**.

GETtheMANUALS.org

DF119 CONTINUED 2	

Check the **continuity** of the following connections:
- **3PL** between components **120** and **746**,
- **3CQ** between components **120** and **746.**

Check the **+ 12 V after relay feed** to the camshaft sensor on the following connection:
- **3FB** of component **746**.

If the connection or connections are faulty and if there is a repair method (see **Technical Note 6015A, Electrical wiring repair, Wiring: Precautions for repair**), repair the wiring, otherwise replace the wiring.

– Check the conformity of the camshaft sprocket/camshaft assembly.
– Check the timing adjustment.
Carry out the necessary repairs.

If the fault is still present, contact the Techline.

AFTER REPAIR	Deal with any other faults. Clear the fault memory. Switch off the ignition until the end of the power-latch phase, and carry out a road test followed by a check with the **diagnostic tool**.

GETtheMANUALS.org

DF120 PRESENT OR STORED	ENGINE SPEED SENSOR SIGNAL 1.DEF: Engine speed signal interference, broken tooth on flywheel or engine speed sensor internal fault 2.DEF: No engine speed signal, or interference affecting engine speed signal

NOTES	**Conditions for applying the fault finding procedure to a stored fault:** If the fault is declared **present** after: – starting the engine, – a road test, – attempting to start the engine.
	Special notes: The engine speed sensor is consistent with the camshaft sensor. If the fault is **present**: – particle filter regeneration is inhibited, – the **level 2** warning light is lit. Use bornier **Elé.1681** for any operations on the injection computer connectors.
	Use the **Wiring Diagram Technical Note, Laguna II ph2, Vel Satis ph2, Espace IV ph2, Mégane II ph2, Scénic II ph2**.

Check the condition of the engine speed sensor connector (see **Wiring Diagram Technical Note, Laguna II ph2, Vel Satis ph2, Espace IV ph2, Mégane II ph2, Scénic II ph2, component code 149**).
Check the condition of the engine management computer connector (see **Wiring Diagram Technical Note, Laguna II ph2, Vel Satis ph2, Espace IV ph2, Mégane II ph2, Scénic II ph2, component code 120**).
If the connector or connectors are faulty and if there is a repair procedure (see **Technical Note 6015A, Repairing electrical wiring, Wiring: Precautions for repair**), repair the connector, otherwise replace the wiring.

Check that the sensor is securely attached.
Measure **the resistance** between connections **3BG** and **3BL** of component **149**.

If the **winding resistance** is not between **600** Ω and **1000** Ω, replace the engine speed sensor.

AFTER REPAIR	Deal with any other faults. Clear the fault memory. Switch off the ignition until the end of the power-latch phase, and carry out a road test followed by a check with the **diagnostic tool**.

EDC16CP33_V18_DF120 / EDC16CP33_V1C_DF120 / EDC16CP33_V54_DF120 / EDC16CP33_V20_DF120 / EDC16CP33_V58_DF120 / EDC16CP33_V5C_DF120 / EDC16CP33_V24_DF120 / EDC16CP33_V04_DF120 / EDC16CP33_V08_DF120 / EDC16CP33_V44_DF120 / EDC16CP33_V4C_DF120 / EDC16CP33_V34_DF120 / EDC16CP33_V38_DF120 / EDC16CP33_V74_DF120 / EDC16CP33_V28_DF120 / EDC16CP33_V62_DF120/ EDC16CP33_V26_DF120 / EDC16CP33_V60_DF120

GETtheMANUALS.org

DF120 CONTINUED	

Check the **continuity, insulation** from **+ 12 V** and **absence of interference resistance** of the following connections:

- **3BG** between components **120** and **149**,
- **3BL** between components **120** and **149**.

If the connection or connections are faulty and if there is a repair method (see **Technical Note 6015A, Electrical wiring repair, Wiring: Precautions for repair**), repair the wiring, otherwise replace the wiring.

If the fault is still present, replace the engine speed sensor.

AFTER REPAIR	Deal with any other faults. Clear the fault memory. Switch off the ignition until the end of the power-latch phase, and carry out a road test followed by a check with the **diagnostic tool**.

GETtheMANUALS.org

DF151 STORED	MAIN RELAY CIRCUIT 1.DEF: Relay cut off too soon 2.DEF: Relay cut off too late

NOTES	**Special notes:** The **level 1** warning light is on.
	Use the **Wiring Diagram Technical Note, Laguna II ph2, Vel Satis ph2, Espace IV ph2, Mégane II ph2, Scénic II ph2**.
	IMPORTANT: For **Mégane II ph2 and Scénic II ph2**, the injection supply relay is located on the UPC. For **Laguna II ph2 and Espace IV ph2**, the injection supply relay is located on the engine fuse and relay box.

1.DEF	***NOTES***	None.

Check the condition of the injection supply relay mounting connector (see **Wiring Diagram Technical Note, Laguna II ph2, Vel Satis ph2, Espace IV ph2, Mégane II ph2, Scénic II ph2, component code 983**).
Check the condition of the engine management computer connector (see **Wiring Diagram Technical Note, Laguna II ph2, Vel Satis ph2, Espace IV ph2, Mégane II ph2, Scénic II ph2, component code 120**).
If the connector or connectors are faulty and if there is a repair procedure (see **Technical Note 6015A, Repairing electrical wiring, Wiring: Precautions for repair**), repair the connector, otherwise replace the wiring.

Check the tightness and the condition of the "**+** " and "**-**" battery terminals.

Check the conformity of the main relay (relay removed) **(Laguna II ph2 and Espace IV ph2)**:
- **Insulation** between connections **3FB** and **BP37** or **3MV** of component **983**.
- Measure the **resistance** between connections **3AA** and **BP37** of component **983**.

(see **Wiring Diagram Technical Note, Laguna II ph2, Vel Satis ph2, Espace IV ph2, Mégane II ph2, Scénic II ph2, Component code 983**).
Replace the relay if its resistance is less than **6** Ω or greater than **1 k**Ω.

AFTER REPAIR	Deal with any other faults. Clear the fault memory. Switch off the ignition until the end of the power-latch phase, and carry out a road test followed by a check with the **diagnostic tool**.

EDC16CP33_V18_DF151M / EDC16CP33_V1C_DF151M / EDC16CP33_V54_DF151M / EDC16CP33_V20_DF151M / EDC16CP33_V58_DF151M / EDC16CP33_V5C_DF151M / EDC16CP33_V24_DF151M / EDC16CP33_V04_DF151M / EDC16CP33_V08_DF151M / EDC16CP33_V44_DF151M / EDC16CP33_V4C_DF151M / EDC16CP33_V34_DF151M / EDC16CP33_V38_DF151M / EDC16CP33_V74_DF151M / EDC16CP33_V28_DF151M / EDC16CP33_V62_DF151M/ EDC16CP33_V26_DF151M / EDC16CP33_V60_DF151M

GETtheMANUALS.org

DF151 CONTINUED 1	

Check the **+ 12 V battery supply** to the injection supply relay on the following connection:
- **BP37** or **3MV** of component **983 (Laguna II ph2** and **Espace IV ph2)**,
- **BP31** of component **1337 (Mégane II ph2** and **Scénic II ph2**).

Check the **+ 12 V after relay feed** to the injection supply relay on the following connection:
- **3FB** of component **983** or **1337**.

Check the **continuity** and **insulation** from **+ 12 V** of the following connection:
- **3AA** between components **120** and **983** or **1337**.

If the connection or connections are faulty and if there is a repair method (see **Technical Note 6015A, Electrical wiring repair, Wiring: Precautions for repair**), repair the wiring, otherwise replace the wiring.

Check the **+ 12 V after relay supply** to the engine management computer on the following connection:
- **3FB** of component **120**.

Check the conformity of the **earths** on connections **NT** of component **120**.

If the connection or connections are faulty and if there is a repair method (see **Technical Note 6015A, Electrical wiring repair, Wiring: Precautions for repair**), repair the wiring, otherwise replace the wiring.

If the fault is still present, replace the injection supply relay.

AFTER REPAIR	Deal with any other faults. Clear the fault memory. Switch off the ignition until the end of the power-latch phase, and carry out a road test followed by a check with the **diagnostic tool**.

GETtheMANUALS.org

DF151 CONTINUED 2	

2.DEF	***NOTES***	None.

Check the condition of the injection supply relay mounting connector (see **Wiring Diagram Technical Note, Laguna II ph2, Vel Satis ph2, Espace IV ph2, Mégane II ph2, Scénic II ph2, component code 983** or **1337**).
Check the condition of the engine management computer connector (see **Wiring Diagram Technical Note, Laguna II ph2, Vel Satis ph2, Espace IV ph2, Mégane II ph2, Scénic II ph2, component code 120**).
If the connector or connectors are faulty and if there is a repair procedure (see **Technical Note 6015A, Repairing electrical wiring, Wiring: Precautions for repair**), repair the connector, otherwise replace the wiring.

Check the conformity of the main relay (relay removed) **(Laguna II ph2** and **Espace IV ph2)**:
- **Insulation** between connections **3FB** and **BP37** of component **983**.
- Measure the **resistance** between connections **3AA** and **BP37** (or **3MV**)of component **983**.

(see **Wiring Diagram Technical Note, Laguna II ph2, Vel Satis ph2, Espace IV ph2, Mégane II ph2, Scénic II ph2, component code 983**).
Replace the relay if its resistance is less than **6** Ω or greater than **1 k**Ω**.**

Check the **insulation** to **earth** of the following connection:
- **3AA** between components **120** and **983** or **1337**.

If the connection or connections are faulty and if there is a repair method (see **Technical Note 6015A, Electrical wiring repair, Wiring: Precautions for repair**), repair the wiring, otherwise replace the wiring.

If the fault is still present, replace the injection supply relay.

AFTER REPAIR	Deal with any other faults. Clear the fault memory. Switch off the ignition until the end of the power-latch phase, and carry out a road test followed by a check with the **diagnostic tool**.

GETtheMANUALS.org

DF165 PRESENT OR STORED	ACCELERATOR PEDAL POSITION SENSOR CIRCUIT 1.DEF: Detection of the accelerator pedal depressed at the same time as the brake pedal. 2.DEF: No signal 3.DEF: Jammed accelerator pedal detected

NOTES	**Priorities when dealing with a number of faults:** **– DF012 Sensor supply voltage no. 2.**
	Conditions for applying the fault finding procedure to a stored fault: The fault is declared **present** when the brake pedal and accelerator pedal are depressed simultaneously.
	Special notes: – Turbocharging and cruise control are not authorised. – The engine speed is fixed at **1700 rpm**. – The **level 1** warning light is lit for **2.DEF** and **3.DEF.** Use bornier **Elé.1681** for any operations on the computer connectors.
	Use the **Wiring Diagram Technical Note, Laguna II ph2, Vel Satis ph2, Espace IV ph2, Mégane II ph2, Scénic II ph2**.

Check that the accelerator pedal is not jammed
Check the condition of the pedal sensor connector (**component code 921**). Check the condition of the engine management computer connector (**component code 120**). If the connector or connectors are faulty and if there is a repair procedure (see **Technical Note 6015A, Repairing electrical wiring, Wiring: Precautions for repair**), repair the connector, otherwise replace the wiring.
Measure the **resistance** between connections **3LT** and **3LR** of component **921**. If the accelerator pedal sensor resistance is not between: **0.7 kΩ < X < 1.7 kΩ** or **0.91 kΩ < X < 2.49 kΩ (M9R721),** replace the sensor.

AFTER REPAIR	Deal with any other faults. Clear the fault memory. Switch off the ignition until the end of the power-latch phase, and carry out a road test followed by a check with the **diagnostic tool**.

EDC16CP33_V18_DF165 / EDC16CP33_V1C_DF165 / EDC16CP33_V54_DF165 / EDC16CP33_V20_DF165 / EDC16CP33_V58_DF165 / EDC16CP33_V5C_DF165 / EDC16CP33_V24_DF165 / EDC16CP33_V04_DF165 / EDC16CP33_V08_DF165 / EDC16CP33_V44_DF165 / EDC16CP33_V4C_DF165 / EDC16CP33_V34_DF165 / EDC16CP33_V38_DF165 / EDC16CP33_V74_DF165 / EDC16CP33_V28_DF165 / EDC16CP33_V62_DF165/ EDC16CP33_V26_DF165 / EDC16CP33_V60_DF165

GETtheMANUALS.org

DF165 CONTINUED	

Measure the **resistance** between connections **3LU** and **3LV** of component **921**.
If the accelerator pedal sensor resistance is not between: **1 kΩ < X < 2.4 kΩ** or **385.97 kΩ < X < 388.03 kΩ (M9R721)**, replace the sensor.

Check the **continuity** and **absence of interference resistance** of the following connections:
- **3LR** between components **120** and **921**.
- **3LS** between components **120** and **921**.
- **3LT** between components **120** and **921**.
- **3LU** between components **120** and **921**.
- **3LW** between components **120** and **921**.
- **3LV** between components **120** and **921**.

If the connection or connections are faulty and if there is a repair method (see **Technical Note 6015A, Electrical wiring repair, Wiring: Precautions for repair**), repair the wiring, otherwise replace the wiring.

If the fault is still present, contact the Techline.

AFTER REPAIR	Deal with any other faults. Clear the fault memory. Switch off the ignition until the end of the power-latch phase, and carry out a road test followed by a check with the **diagnostic tool**.

GETtheMANUALS.org

DF195 PRESENT OR STORED	ENGINE SPEED/CAMSHAFT SENSOR CONSISTENCY 1.DEF: No engine speed signal, or engine speed signal interference

NOTES	**Priorities when dealing with a number of faults:** **– DF119 Camshaft sensor signal** **– DF120 Engine speed sensor signal.**
	Conditions for applying the fault finding procedure to a stored fault: The fault is declared **present** after the starter has been running for **10 seconds** or a **1 minute** delay with the engine running.
	Special notes: Use bornier **Elé. 1681** for any operations on the computer connector.
	Use the **Wiring Diagram Technical Note, Laguna II ph2, Vel Satis ph2, Espace IV ph2, Mégane II ph2, Scénic II ph2**.

Check the sensor mounting and the conformity of the camshaft target.
Check the condition of the engine speed sensor connector (see **Wiring Diagram Technical Note, Laguna II ph2, Vel Satis ph2, Espace IV ph2, Mégane II ph2, Scénic II ph2, component code 149**). Check the condition of the camshaft sensor connector (see **Wiring Diagram Technical Note, Laguna II ph2, Vel Satis ph2, Espace IV ph2, Mégane II ph2, Scénic II ph2, component code 746**). Check the condition of the engine management computer connector (see **Wiring Diagram Technical Note, Laguna II ph2, Vel Satis ph2, Espace IV ph2, Mégane II ph2, Scénic II ph2, component code 120**). If the connector or connectors are faulty and if there is a repair procedure (see **Technical Note 6015A, Repairing electrical wiring, Wiring: Precautions for repair**), repair the connector, otherwise replace the wiring.
– Check the conformity of the camshaft sprocket/camshaft assembly. – Check the timing adjustment. Carry out the necessary repairs.
If the fault is still present, contact the Techline.

AFTER REPAIR	Deal with any other faults. Clear the fault memory. Switch off the ignition until the end of the power-latch phase, and carry out a road test followed by a check with the **diagnostic tool**.

EDC16CP33_V18_DF195 / EDC16CP33_V1C_DF195 / EDC16CP33_V54_DF195 / EDC16CP33_V20_DF195 / EDC16CP33_V58_DF195 / EDC16CP33_V5C_DF195 / EDC16CP33_V24_DF195 / EDC16CP33_V04_DF195 / EDC16CP33_V08_DF195 / EDC16CP33_V44_DF195 / EDC16CP33_V4C_DF195 / EDC16CP33_V34_DF195 / EDC16CP33_V38_DF195 / EDC16CP33_V74_DF195 / EDC16CP33_V28_DF195 / EDC16CP33_V62_DF195/ EDC16CP33_V26_DF195 / EDC16CP33_V60_DF195

GETtheMANUALS.org

DF196 PRESENT OR STORED	PEDAL SENSOR CIRCUIT GANG 1 CO.0: Open circuit or short circuit to earth CC.1: Short circuit to + 12 V 1.DEF: Consistency between gang 1 and gang 2

NOTES	**Priorities when dealing with a number of faults:** **– DF011 Sensor voltage supply no. 1**
	Conditions for applying the fault finding procedure to a stored fault: The fault is declared **present** after a series of full load / no load actions on the accelerator pedal.
	Special notes: – engine torque limited, – cruise control not authorised, – the **level 1** warning light is illuminated, – idle speed is **1400 rpm**, Use bornier **Elé. 1681** for any work on the computer connectors.
	Use the **Wiring Diagram Technical Note, Laguna II ph2, Vel Satis ph2, Espace IV ph2, Mégane II ph2, Scénic II ph2**.

CO.0	***NOTES***	If there is a simultaneous occurrence of fault **DF198 Pedal sensor circuit gang 2**, check that the pedal sensor connector is connected correctly.

Check the condition of the pedal sensor connector (see **Wiring Diagram Technical Note, Laguna II ph2, Vel Satis ph2, Espace IV ph2, Mégane II ph2, Scénic II ph2, component code 921**).
Check the condition of the engine management computer connector (see **Wiring Diagram Technical Note, Laguna II ph2, Vel Satis ph2, Espace IV ph2, Mégane II ph2, Scénic II ph2, component code 120**).
If the connector or connectors are faulty and if there is a repair procedure (see **Technical Note 6015A, Repairing electrical wiring, Wiring: Precautions for repair**), repair the connector, otherwise replace the wiring.

AFTER REPAIR	Deal with any other faults. Clear the fault memory. Switch off the ignition until the end of the power-latch phase, and carry out a road test followed by a check with the **diagnostic tool**.

EDC16CP33_V18_DF196 / EDC16CP33_V1C_DF196 / EDC16CP33_V54_DF196 / EDC16CP33_V20_DF196 / EDC16CP33_V58_DF196 / EDC16CP33_V5C_DF196 / EDC16CP33_V24_DF196 / EDC16CP33_V04_DF196 / EDC16CP33_V08_DF196 / EDC16CP33_V44_DF196 / EDC16CP33_V4C_DF196 / EDC16CP33_V34_DF196 / EDC16CP33_V38_DF196 / EDC16CP33_V74_DF196 / EDC16CP33_V28_DF196 / EDC16CP33_V62_DF196 / EDC16CP33_V26_DF196 / EDC16CP33_V60_DF196

GETtheMANUALS.org

DF196 CONTINUED 1	

Measure the **resistance** between connections **3LT** and **3LR** of component **921**.
If the resistance of the pedal sensor gang 1 is less than **500** Ω or greater than **2 k**Ω, replace the sensor.
Measure the **resistance** between connections **3LT** and **3LS** of component **921.**
If the resistance of the pedal sensor gang 1 is less than **500** Ω or greater than **10 k**Ω, replace the sensor.

Check **the continuity** of the following connections:
- **3LS** between components **120** and **921**,
- **3LR** between components **120** and **921**.

Check the **insulation** to **earth** of the following connection:
- **3LS** between components **120** and **921**.

If the connection or connections are faulty and if there is a repair method (see **Technical Note 6015A, Electrical wiring repair, Wiring: Precautions for repair**), repair the wiring, otherwise replace the wiring.

CO.1	*NOTES*	None.

Check the condition of the pedal sensor connector (see **Wiring Diagram Technical Note, Laguna II ph2, Vel Satis ph2, Espace IV ph2, Mégane II ph2, Scénic II ph2, component code 921**).
Check the condition of the engine management computer connector (see **Wiring Diagram Technical Note, Laguna II ph2, Vel Satis ph2, Espace IV ph2, Mégane II ph2, Scénic II ph2, component code 120**).
If the connector or connectors are faulty and if there is a repair procedure (see **Technical Note 6015A, Repairing electrical wiring, Wiring: Precautions for repair**), repair the connector, otherwise replace the wiring.

AFTER REPAIR	Deal with any other faults. Clear the fault memory. Switch off the ignition until the end of the power-latch phase, and carry out a road test followed by a check with the **diagnostic tool**.

GETtheMANUALS.org

DF196 CONTINUED 2	

Measure the **resistance** between connections **3LT** and **3LR** of component **921**.
If the resistance of the pedal sensor gang 1 is less than **500** Ω or greater than **2 k**Ω, replace the sensor.

Measure the **resistance** between connections **3LT** and **3LS** of component **921.**
If the resistance of the pedal sensor gang 1 is less than **500** Ω or greater than **10 k**Ω, replace the sensor.

Check **the insulation** from **+ 12 V** and **+ 5 V** (computer feeds) of the following connection:
- **3LS** between components **120** and **921**.

Check **the continuity** of the following connection:
- **3LT** between components **120** and **921**.

If the connection or connections are faulty and if there is a repair method (see **Technical Note 6015A, Electrical wiring repair, Wiring: Precautions for repair**), repair the wiring, otherwise replace the wiring.

1.DEF	*NOTES*	None.

Check the condition of the pedal sensor connector (see **Wiring Diagram Technical Note, Laguna II ph2, Vel Satis ph2, Espace IV ph2, Mégane II ph2, Scénic II ph2, component code 921**).
Check the condition of the engine management computer connector (see **Wiring Diagram Technical Note, Laguna II ph2, Vel Satis ph2, Espace IV ph2, Mégane II ph2, Scénic II ph2, component code 120**).
If the connector or connectors are faulty and if there is a repair procedure (see **Technical Note 6015A, Repairing electrical wiring, Wiring: Precautions for repair**), repair the connector, otherwise replace the wiring.

AFTER REPAIR	Deal with any other faults. Clear the fault memory. Switch off the ignition until the end of the power-latch phase, and carry out a road test followed by a check with the **diagnostic tool**.

GETtheMANUALS.org

DF196 CONTINUED 3	

Measure the **resistance** between connections **3LT** and **3LR** of component **921**.
If the resistance of the pedal sensor gang 1 is less than **500** Ω or greater than **2 k**Ω, replace the sensor.

Measure the **resistance** between connections **3LT** and **3LS** of component **921.**
If the resistance of the pedal sensor gang 1 is less than **500** Ω or greater than **10 k**Ω, replace the sensor.

Measure the **resistance** between connections **3LU** and **3LV** of component **921**.
If the resistance of the pedal sensor gang 1 is less than **500** Ω or greater than **3 k**Ω, replace the sensor.

Measure the **resistance** between connections **3LV** and **3LW** of component **921.**
If the resistance of the pedal sensor gang 1 is less than **500** Ω or greater than **10 k**Ω, replace the sensor.

Check **for continuity** and **absence of interference resistance** of the following connections:
- **3LR** between components **120** and **921**,
- **3LS** between components **120** and **921**,
- **3LT** between components **120** and **921**,
- **3LU** between components **120** and **921**,
- **3LW** between components **120** and **921**,
- **3LV** between components **120** and **921**.

Check the **insulation** between the following connections:
- **3LS** between components **120** and **921**,
- **3LW** between components **120** and **921**.

If the connection or connections are faulty and if there is a repair method (see **Technical Note 6015A, Electrical wiring repair, Wiring: Precautions for repair**), repair the wiring, otherwise replace the wiring.

If the fault is still present, vary the pedal position and refer to the interpretation of **PR030 Accelerator pedal position** to check the operating values of the accelerator pedal sensor.
If the values displayed are inconsistent, replace the accelerator pedal sensor.

AFTER REPAIR	Deal with any other faults. Clear the fault memory. Switch off the ignition until the end of the power-latch phase, and carry out a road test followed by a check with the **diagnostic tool**.

GETtheMANUALS.org

DF198 PRESENT OR STORED	PEDAL SENSOR CIRCUIT GANG 2 CO.0: Open circuit or short circuit to earth CC.1: Short circuit to + 12 V 1.DEF: Consistency between gang 1 and gang 2

NOTES	**Priorities when dealing with a number of faults:** **– DF012 Sensor supply voltage no. 2.**
	Conditions for applying the fault finding procedure to a stored fault: The fault is declared **present** after a series of full load / no load actions on the accelerator pedal.
	Special notes: – engine torque limited, – cruise control not authorised, – the **level 1** warning light is illuminated, – the idling speed is **1400 rpm**. Use bornier **Elé. 1681** for any work on the computer connectors
	Use the **Wiring Diagram Technical Note, Laguna II ph2, Vel Satis ph2, Espace IV ph2, Mégane II ph2, Scénic II ph2**.

CO.0	***NOTES***	If there is a simultaneous occurrence of fault **DF196 Pedal sensor circuit gang 1**, check that the pedal sensor connector is connected correctly.

Check the condition of the pedal sensor connector (see **Wiring Diagram Technical Note, Laguna II ph2, Vel Satis ph2, Espace IV ph2, Mégane II ph2, Scénic II ph2, component code 921**).
Check the condition of the engine management computer connector (see **Wiring Diagram Technical Note, Laguna II ph2, Vel Satis ph2, Espace IV ph2, Mégane II ph2, Scénic II ph2, component code 120**).
If the connector or connectors are faulty and if there is a repair procedure (see **Technical Note 6015A, Repairing electrical wiring, Wiring: Precautions for repair**), repair the connector, otherwise replace the wiring.

AFTER REPAIR	Deal with any other faults. Clear the fault memory. Switch off the ignition until the end of the power-latch phase, and carry out a road test followed by a check with the **diagnostic tool**.

EDC16CP33_V18_DF198 / EDC16CP33_V1C_DF198 / EDC16CP33_V54_DF198 / EDC16CP33_V20_DF198 / EDC16CP33_V58_DF198 / EDC16CP33_V5C_DF198 / EDC16CP33_V24_DF198 / EDC16CP33_V04_DF198 / EDC16CP33_V08_DF198 / EDC16CP33_V44_DF198 / EDC16CP33_V4C_DF198 / EDC16CP33_V34_DF198 / EDC16CP33_V38_DF198 / EDC16CP33_V74_DF198 / EDC16CP33_V28_DF198 / EDC16CP33_V62_DF198 / EDC16CP33_V26_DF198 / EDC16CP33_V60_DF198

GETtheMANUALS.org

DF198 CONTINUED 1	

Measure the **resistance** between connections **3LV** and **3LU** of component **921.**
If the resistance of the pedal sensor gang 2 is less than **500** Ω or greater than **3 k**Ω, replace the sensor.

Measure the **resistance** between connections **3LV** and **3LW** of component **921.**
If the resistance of the pedal sensor gang 2 is less than **500** Ω or greater than **10 k**Ω, replace the sensor.

Check **the continuity** of the following connections:
- **3LU** between components **120** and **921**,
- **3LW** between components **120** and **921**.

Check the **insulation** to **earth** of the following connection:
- **3LW** between components **120** and **921**.

If the connection or connections are faulty and if there is a repair method (see **Technical Note 6015A, Electrical wiring repair, Wiring: Precautions for repair**), repair the wiring, otherwise replace the wiring.

CO.1	*NOTES*	None.

Check the condition of the pedal sensor connector (see **Wiring Diagram Technical Note, Laguna II ph2, Vel Satis ph2, Espace IV ph2, Mégane II ph2, Scénic II ph2, component code 921**).
Check the condition of the engine management computer connector (see **Wiring Diagram Technical Note, Laguna II ph2, Vel Satis ph2, Espace IV ph2, Mégane II ph2, Scénic II ph2, component code 120**).
If the connector or connectors are faulty and if there is a repair procedure (see **Technical Note 6015A, Repairing electrical wiring, Wiring: Precautions for repair**), repair the connector, otherwise replace the wiring.

Measure the **resistance** between connections **3LV** and **3LU** of component **921.**
If the resistance of the pedal sensor gang 2 is less than **500** Ω or greater than **3 k**Ω, replace the sensor.

Measure the **resistance** between connections **3LV** and **3LW** of component **921.**
If the resistance of the pedal sensor gang 2 is less than **500** Ω or greater than **10 k**Ω, replace the sensor.

AFTER REPAIR	Deal with any other faults. Clear the fault memory. Switch off the ignition until the end of the power-latch phase, and carry out a road test followed by a check with the **diagnostic tool**.

GETtheMANUALS.org

DF198 CONTINUED 2	

Check **the insulation** from **+ 12 V** and **+ 5 V** (computer feeds) of the following connection:
- **3LW** between components **120** and **921**.

Check **the continuity** of the following connection:
- **3LV** between components **120** and **921**.

If the connection or connections are faulty and if there is a repair method (see **Technical Note 6015A, Electrical wiring repair, Wiring: Precautions for repair**), repair the wiring, otherwise replace the wiring.

1.DEF	***NOTES***	None.

Check the condition of the pedal sensor connector (see **Wiring Diagram Technical Note, Laguna II ph2, Vel Satis ph2, Espace IV ph2, Mégane II ph2, Scénic II ph2, component code 921**).
Check the condition of the engine management computer connector (see **Wiring Diagram Technical Note, Laguna II ph2, Vel Satis ph2, Espace IV ph2, Mégane II ph2, Scénic II ph2, component code 120**).
If the connector or connectors are faulty and if there is a repair procedure (see **Technical Note 6015A, Repairing electrical wiring, Wiring: Precautions for repair**), repair the connector, otherwise replace the wiring.

Measure the **resistance** between connections **3LR** and **3LT** of component **921.**
If the resistance of the pedal sensor gang 2 is less than **500** Ω or greater than **2 k**Ω, replace the sensor.

Measure the **resistance** between connections **3LS** and **3LT** of component **921.**
If the resistance of the pedal sensor gang 2 is less than **500** Ω or greater than **10 k**Ω, replace the sensor.

Measure the **resistance** between connections **3LV** and **3LU** of component **921.**
If the resistance of the pedal sensor gang 2 is less than **500** Ω or greater than **3 k**Ω, replace the sensor.

Measure the **resistance** between connections **3LV** and **3LW** of component **921.**
If the resistance of the pedal sensor gang 2 is less than **500** Ω or greater than **10 k**Ω, replace the sensor.

AFTER REPAIR	Deal with any other faults. Clear the fault memory. Switch off the ignition until the end of the power-latch phase, and carry out a road test followed by a check with the **diagnostic tool**.

GETtheMANUALS.org

DF198 CONTINUED 3	

Check **for continuity** and **absence of interference resistance** on the following connections:
- **3LR** between components **120** and **921**,
- **3LS** between components **120** and **921**,
- **3LT** between components **120** and **921**,
- **3LU** between components **120** and **921**,
- **3LW** between components **120** and **921**,
- **3LV** between components **120** and **921**.

Check the **insulation** between the following connections:
- **3LW** between components **120** and **921**,
- **3LS** between components **120** and **921**.

If the connection or connections are faulty and if there is a repair method (see **Technical Note 6015A, Electrical wiring repair, Wiring: Precautions for repair**), repair the wiring, otherwise replace the wiring.

If the fault is still present, vary the pedal position and refer to the interpretation of **PR030 Accelerator pedal position** to check the operating values of the accelerator pedal sensor.
If the values displayed are inconsistent, replace the accelerator pedal sensor.

AFTER REPAIR	Deal with any other faults. Clear the fault memory. Switch off the ignition until the end of the power-latch phase, and carry out a road test followed by a check with the **diagnostic tool**.

GETtheMANUALS.org

DF200 PRESENT OR STORED	ATMOSPHERIC PRESSURE SENSOR 1.DEF: Above maximum threshold 2.DEF: Below minimum threshold

NOTES	**Conditions for applying the fault finding procedure to a stored fault:** The fault is declared **present** after: – the ignition is switched on. – the engine is started, – a road test.
	Special notes: The **EOBD (European On Board Diagnostic)** warning light is lit. The atmospheric pressure sensor is integrated in the injection computer, and cannot be separated.
	If the fault is **present**: – there is light smoke, – the atmospheric pressure value changes to safe mode, **PR035 Atmospheric pressure = 0.75 bar**. Use bornier **Elé. 1681** for any work on the computer connectors.
	Use the **Wiring Diagram Technical Note, Laguna II ph2, Vel Satis ph2, Espace IV ph2, Mégane II ph2, Scénic II ph2**.

Disconnect the injection computer and check the condition of the engine management computer connector (see **Wiring Diagram Technical Note, Laguna II ph2, Vel Satis ph2, Espace IV ph2, Mégane II ph2, Scénic II ph2, component code 120**).
If the connector or connectors are faulty and there is a repair procedure (see **Technical Note 6015A, Electrical wiring repair, Wiring: Precautions for repair**), repair the connector, otherwise replace the wiring.

Check the value of **PR035 Atmospheric pressure** by comparing it with the reading on a conforming vehicle in the workshop.

If the value of **PR035** is not correct (difference greater than **0.1 bar** between the 2 vehicles), contact the Techline.

AFTER REPAIR	Deal with any other faults. Clear the fault memory. Switch off the ignition until the end of the power-latch phase, and carry out a road test followed by a check with the **diagnostic tool**.

EDC16CP33_V18_DF200 / EDC16CP33_V1C_DF200 / EDC16CP33_V54_DF200 / EDC16CP33_V20_DF200 / EDC16CP33_V58_DF200 / EDC16CP33_V5C_DF200 / EDC16CP33_V24_DF200 / EDC16CP33_V04_DF200 / EDC16CP33_V08_DF200 / EDC16CP33_V44_DF200 / EDC16CP33_V4C_DF200 / EDC16CP33_V34_DF200 / EDC16CP33_V38_DF200 / EDC16CP33_V74_DF200 / EDC16CP33_V28_DF200 / EDC16CP33_V62_DF200 / EDC16CP33_V26_DF200 / EDC16CP33_V60_DF200

GETtheMANUALS.org

DF209 PRESENT OR STORED	EGR VALVE POSITION SENSOR CIRCUIT CC.0: Short circuit to earth CO.0: Open circuit or short circuit to earth CO.1: Open circuit or short circuit to +12 V 1.DEF: Open circuit or short circuit

NOTES	**Priorities when dealing with a number of faults:** **– DF046 Battery voltage.** **– DF012 Sensor supply voltage no. 2.**
	Conditions for applying the fault finding procedure to a stored fault: The fault is declared **present** after: – the ignition is switched on. – the engine is started, – a road test.
	Special notes: If the fault is **present**: – the **EOBD (European On Board Diagnostic)** warning light is lit, – EGR programming cut-off: valve in the closed position, – particle filter regeneration is inhibited. Use bornier **Elé. 1681** for all operations on the engine management computer connector.
	Use the **Wiring Diagram Technical Note, Laguna II ph2, Vel Satis ph2, Espace IV ph2, Mégane II ph2, Scénic II ph2**.

CO.1 ***1.DEF***	***NOTES***	None.

Check the condition of the EGR valve (see **Wiring Diagram Technical Note, Laguna II ph2, Vel Satis ph2, Espace IV ph2, Mégane II ph2, Scénic II ph2, component code 1460 or 169**).
Check the condition of the engine management computer connector (see **Wiring Diagram Technical Note, Laguna II ph2, Vel Satis ph2, Espace IV ph2, Mégane II ph2, Scénic II ph2, component code 120**).
If the connector or connectors are faulty and if there is a repair procedure (see **Technical Note 6015A, Repairing electrical wiring, Wiring: Precautions for repair**), repair the connector, otherwise replace the wiring.

AFTER REPAIR	Deal with any other faults. Clear the fault memory. Switch off the ignition until the end of the power-latch phase, and carry out a road test followed by a check with the **diagnostic tool**.

EDC16CP33_V18_DF209 / EDC16CP33_V1C_DF209 / EDC16CP33_V54_DF209 / EDC16CP33_V20_DF209 / EDC16CP33_V58_DF209 / EDC16CP33_V5C_DF209 / EDC16CP33_V24_DF209 / EDC16CP33_V04_DF209 / EDC16CP33_V08_DF209 / EDC16CP33_V44_DF209 / EDC16CP33_V4C_DF209 / EDC16CP33_V34_DF209 / EDC16CP33_V38_DF209 / EDC16CP33_V74_DF209 / EDC16CP33_V28_DF209 / EDC16CP33_V62_DF209 / EDC16CP33_V26_DF209 / EDC16CP33_V60_DF209

GETtheMANUALS.org

DF209 CONTINUED 1	

Measure the **resistance** between connections **3GC** and **3JM** (sensor supply and sensor earth), and between connections **3EL** and **3JM** (sensor signal and sensor earth) of component **1460** or **169**.
If the resistances of the EGR valve are less than **1 kΩ,** replace the valve.
After replacement, run command **SC036 Reinitialise programming** and select **EGR VALVE** to reinitialise the EGR valve offsets.

Check **the insulation** from **+ 12 V** and **+ 5 V** (computer feeds) of the following connection:
- **3EL** between components **120** and **1460** or **169**.

Check **the continuity** of the following connection:
- **3JM** between components **120** and **1460** or **169**.

If the connection or connections are faulty and there is a repair procedure (see **Technical Note 6015A, Electrical wiring repair, Wiring: Precautions for repair**), repair the wiring, otherwise replace it.

Check the **insulation** between the following connections:
- **3EL** between components **120** and **1460** or **169**,
- **3VP** between components **120** and **1460** or **169**.

If the connection or connections are faulty and if there is a repair method (see **Technical Note 6015A, Electrical wiring repair, Wiring: Precautions for repair**), repair the wiring, otherwise replace the wiring.

If the fault is still present, contact the Techline.

AFTER REPAIR	Deal with any other faults. Clear the fault memory. Switch off the ignition until the end of the power-latch phase, and carry out a road test followed by a check with the **diagnostic tool**.

GETtheMANUALS.org

DF209 CONTINUED 2	

CO.0 ***CC.0***	***NOTES***	None.

Check the condition of the EGR valve (see **Wiring Diagram Technical Note, Laguna II ph2, Vel Satis ph2, Espace IV ph2, Mégane II ph2, Scénic II ph2, component code 1460 or 169**).
Check the condition of the engine management computer connector (see **Wiring Diagram Technical Note, Laguna II ph2, Vel Satis ph2, Espace IV ph2, Mégane II ph2, Scénic II ph2, component code 120**).
If the connector or connectors are faulty and if there is a repair procedure (see **Technical Note 6015A, Repairing electrical wiring, Wiring: Precautions for repair**), repair the connector, otherwise replace the wiring.

Measure the **resistance** between connections **3GC** and **3JM** (sensor supply and sensor earth), and between connections **3EL** and **3JM** (sensor signal and sensor earth) of component **1460** or **169**.
If the resistances of the EGR valve are greater than **15 kΩ,** replace the valve.

After replacement, run command **SC036 Reinitialise programming** and select **EGR valve** to reinitialise the EGR valve offsets.

Check **the continuity** of the following connections:
- **3EL** between components **120** and **1460** or **169**,
- **3GC** between components **120** and **1460** or **169**.

Check the **insulation** to **earth** of the following connection:
- **3EL** between components **120** and **1460** or **169**.

Check the **insulation** between the following connections:
- **3EL** between components **120** and **1460** or **169**,
- **3VQ** between components **120** and **1460** or **169**.

If the connection or connections are faulty and if there is a repair method (see **Technical Note 6015A, Electrical wiring repair, Wiring: Precautions for repair**), repair the wiring, otherwise replace the wiring.

If the fault is still present, contact the Techline.

AFTER REPAIR	Deal with any other faults. Clear the fault memory. Switch off the ignition until the end of the power-latch phase, and carry out a road test followed by a check with the **diagnostic tool**.

GETtheMANUALS.org

DF221 STORED	CLUTCH CONTACT SIGNAL 1.DEF: Clutch inconsistency upon gear change

NOTES	**Conditions for applying the fault finding procedure to a stored fault:** If the fault becomes **present** during a road test at over **21 mph (35 km/h)**.
	Special notes: – the cruise control/speed limiter function is switched off. Use bornier **Elé. 1681** for all operations on the engine management computer connector.
	Use the **Wiring Diagram Technical Note, Laguna II ph2, Vel Satis ph2, Espace IV ph2, Mégane II ph2, Scénic II ph2**.

Check the condition of the clutch sensor connector (see **Wiring Diagram Technical Note, Laguna II ph2, Vel Satis ph2, Espace IV ph2, Mégane II ph2, Scénic II ph2, component code 675**).
Check the condition of the engine management computer connector (see **Wiring Diagram Technical Note, Laguna II ph2, Vel Satis ph2, Espace IV ph2, Mégane II ph2, Scénic II ph2, component code 120**).
If the connector or connectors are faulty and if there is a repair procedure (see **Technical Note 6015A, Repairing electrical wiring, Wiring: Precautions for repair**), repair the connector, otherwise replace the wiring.

Display status **ET405 Clutch pedal switch (can only be displayed for Manual Gearboxes)** which is normally **INACTIVE** when the pedal is not depressed.
Depress the clutch pedal and note whether this status becomes **ACTIVE**.

If the status becomes ACTIVE when the clutch pedal is in the rest position.

Clear the fault, switch off the ignition, wait for the end of the power-latch and wait for the **diagnostic tool** message (maximum wait **8 min**): **Loss of dialogue with the computer: EDC16 CP33, check the tool connection and the computer supply voltage** and switch on the ignition again.
Carry out a road test and then take a fault reading.
If the fault is still present, contact the Techline.

AFTER REPAIR	Deal with any other faults. Clear the fault memory. Switch off the ignition until the end of the power-latch phase, and carry out a road test followed by a check with the **diagnostic tool**.

GETtheMANUALS.org

DF221 CONTINUED	

If the status does not become ACTIVE when the clutch pedal is depressed*.*

Remove the clutch pedal switch, check the **insulation** with the switch in the rest position between connections **M** or **MAM** and **86D** of component **675**.
Press the clutch switch and check the **continuity** between connections **M** or **MAM** and **86D** of component **675**.

If these 2 checks are faulty, replace the switch.

Then check **the continuity** and **absence of interference resistance** of the following connection:
- **86D** between components **120** and **675**.

Check that the **earth** is in order on connection **M** or **MAM** of component **675**.

If the connection or connections are faulty and if there is a repair method (see **Technical Note 6015A, Electrical wiring repair, Wiring: Precautions for repair**), repair the wiring, otherwise replace the wiring.

AFTER REPAIR	Deal with any other faults. Clear the fault memory. Switch off the ignition until the end of the power-latch phase, and carry out a road test followed by a check with the **diagnostic tool**.

GETtheMANUALS.org

DF228 PRESENT OR STORED	BRAKE SIGNAL 1.DEF: Consistency with redundant brakes 2.DEF: Engine deceleration too high

1.DEF	***NOTES***	**Conditions for applying the fault finding procedure to a stored fault:** The fault is declared present after the brake pedal is depressed.
		Special notes: If the fault is **present**: – the cruise control/speed limiter function is switched off. Use bornier **Elé. 1681** for all operations on the engine management computer connectors.
		Use the **Wiring Diagram Technical Note, Laguna II ph2, Vel Satis ph2, Espace IV ph2, Mégane II ph2, Scénic II ph2**.

AFTER REPAIR	Deal with any other faults. Clear the fault memory. Switch off the ignition until the end of the power-latch phase, and carry out a road test followed by a check with the **diagnostic tool**.

EDC16CP33_V18_DF228 / EDC16CP33_V1C_DF228 / EDC16CP33_V54_DF228 / EDC16CP33_V20_DF228 / EDC16CP33_V58_DF228 / EDC16CP33_V5C_DF228 / EDC16CP33_V24_DF228 / EDC16CP33_V04_DF228 / EDC16CP33_V08_DF228 / EDC16CP33_V44_DF228 / EDC16CP33_V4C_DF228 / EDC16CP33_V34_DF228 / EDC16CP33_V38_DF228 / EDC16CP33_V74_DF228 / EDC16CP33_V28_DF228 / EDC16CP33_V62_DF228 / EDC16CP33_V26_DF228 / EDC16CP33_V60_DF228

GETtheMANUALS.org

DF228 CONTINUED 1	

From the "List of statuses" menu, check **ET704 Brake contact no. 1** and **ET705 Brake contact no. 2** and check:
– brake pedal in rest position **ET704** = **INACTIVE** and **ET705** = **INACTIVE**
– brake pedal depressed **ET704** = **ACTIVE** and **ET705 = ACTIVE**

Is **ET705** correctly recognised?
NO → B
YES

Is **ET704** correctly recognised?
YES → Clear the fault
End of fault finding procedure
NO → A

C

AFTER REPAIR	Deal with any other faults. Clear the fault memory. Switch off the ignition until the end of the power-latch phase, and carry out a road test followed by a check with the **diagnostic tool**.

GETtheMANUALS.org

DF228 CONTINUED 2	

A

NO

Check the condition of the brake pedal switch connector (see **Wiring Diagram Technical Note, Laguna II ph2, Vel Satis ph2, Espace IV ph2, Mégane II ph2, Scénic II ph2, component code 160**).
Check the condition of the ABS computer connector (see **Wiring Diagram Technical Note, Laguna II ph2, Vel Satis ph2, Espace IV ph2, Mégane II ph2, Scénic II ph2, component code 1094 or 118**).
Check the condition of the engine management computer connector (see **Wiring Diagram Technical Note, Laguna II ph2, Vel Satis ph2, Espace IV ph2, Mégane II ph2, Scénic II ph2, component code 120**).
If the connector or connectors are faulty and if there is a repair procedure (see **Technical Note 6015A, Repairing electrical wiring, Wiring: Precautions for repair**), repair the connector, otherwise replace the wiring.

Check the **+ 12 V after relay supply** to the brake pedal switch on the following connections:
- **SP13** of component **160**,
- **AP10** of component **160**.

Disconnect the ABS/ESP (electronic stability program) computer and check the **continuity** and **insulation** from **+ 12 V** and from **earth** of the following connections:
- **65A** between components **1094** (or **118**) and **160**,
- **65G** between components **1094** and **160**.

If the connection or connections are faulty and if there is a repair method (see **Technical Note 6015A, Electrical wiring repair, Wiring: Precautions for repair**), repair the wiring, otherwise replace the wiring.

Remove the brake pedal switch and check that it is working correctly:
– in the rest position: infinite resistance between connections **SP13** and **5A** of component **160.**
– depressed: continuity between connections **SP13** and **5A** of component **160**.

Replace the switch if necessary.

If the fault is still present, run **fault finding on the ABS/ESP** (see **38C, Anti-lock braking system),** then if no faults are detected, run **fault finding on the multiplex network** (see **88B, Multiplexing**).

C

AFTER REPAIR	Deal with any other faults. Clear the fault memory. Switch off the ignition until the end of the power-latch phase, and carry out a road test followed by a check with the **diagnostic tool**.

GETtheMANUALS.org

DF228 CONTINUED 3	

B

NO

Check the condition of the brake pedal switch connector (see **Wiring Diagram Technical Note, Laguna II ph2, Vel Satis ph2, Espace IV ph2, Mégane II ph2, Scénic II ph2, component code 160**).
Check the condition of the engine management computer connector (see **Wiring Diagram Technical Note, Laguna II ph2, Vel Satis ph2, Espace IV ph2, Mégane II ph2, Scénic II ph2, component code 120**).
If the connector or connectors are faulty and if there is a repair procedure (see **Technical Note 6015A, Repairing electrical wiring, Wiring: Precautions for repair**), repair the connector, otherwise replace the wiring.

Remove and check the condition and adjustment of the brake pedal switch.
Repair if necessary.

Check the **+ 12 V after relay supply** to the brake pedal switch on the following connections:
- **SP13** of component **160**,
- **AP10** of component **160**.

If the connection or connections are faulty and if there is a repair method (see **Technical Note 6015A, Electrical wiring repair, Wiring: Precautions for repair**), repair the wiring, otherwise replace the wiring.

Disconnect the ABS/ESP (electronic stability program) computer and check the **continuity and insulation** from **+ 12 V** and from **earth** of the following connection:
- **5A** between components **120** and **160**.

If the connection is faulty and there is a repair procedure (see **Technical Note 6015A, Electrical wiring repair, Wiring: Precautions for repair**), repair the wiring, otherwise replace it.

Check that the brake pedal switch is working correctly:
– in the rest position: infinite resistance between connections **SP13** and **5A** of component **160**,
– depressed: continuity between connections **SP13** and **5A** of component **160**.

Replace the switch if necessary.

If the fault is still present, repeat the procedure from the start.

AFTER REPAIR	Deal with any other faults. Clear the fault memory. Switch off the ignition until the end of the power-latch phase, and carry out a road test followed by a check with the **diagnostic tool**.

GETtheMANUALS.org

DF228 CONTINUED 4	

2.DEF	*NOTES*	**Conditions for applying the fault finding procedure to a stored fault:** The fault is declared present after the brake pedal is depressed.
		Special notes: If the fault is **present**: – the cruise control/speed limiter function is switched off. Use bornier **Elé. 1681** for all operations on the engine management computer connectors.

Check the condition of the ABS computer connector (see **Wiring Diagram Technical Note, Laguna II ph2, Vel Satis ph2, Espace IV ph2, Mégane II ph2, Scénic II ph2, component code 1094**). Check the condition of the engine management computer connector (see **Wiring Diagram Technical Note, Laguna II ph2, Vel Satis ph2, Espace IV ph2, Mégane II ph2, Scénic II ph2, component code 120**). If the connector or connectors are faulty and there is a repair procedure (see **Technical Note 6015A, Electrical wiring repair, Wiring: Precautions for repair**), repair the connector, otherwise replace the wiring.
Run complete fault finding on the ABS (see **38C Anti-lock braking system**).
Run complete fault finding on the multiplex network (see **88B, Multiplexing**).
If the fault is still present, contact the Techline.

AFTER REPAIR	Deal with any other faults. Clear the fault memory. Switch off the ignition until the end of the power-latch phase, and carry out a road test followed by a check with the **diagnostic tool**.

GETtheMANUALS.org

DF249 PRESENT OR STORED	INJECTOR CONTROL 1.DEF: Internal electronic fault

NOTES	**Conditions for applying the fault finding procedure to a stored fault:** If the fault becomes **present** after: – the ignition is switched on, – the engine is started.
	Priorities when dealing with a number of faults: **– DF046 Battery voltage,** **– DF026 Cylinder 1 injector control circuit,** **– DF027 Cylinder 2 injector control circuit,** **– DF028 Cylinder 3 injector control circuit,** **– DF029 Cylinder 4 injector control circuit.**
	Special notes: If the fault is **present**: – in certain cases, the **level 2** warning light is lit and the engine is stopped. Use bornier **Elé.1681** for all operations on the engine management computer.
	Use the **Wiring Diagram Technical Note, Laguna II ph2, Vel Satis ph2, Espace IV ph2, Mégane II ph2, Scénic II ph2**.

This fault appears when the computer detects a fault on the injector control section.

Check the condition of the injector connectors (see **Wiring Diagram Technical Note, Laguna II ph2, Vel Satis ph2, Espace IV ph2, Mégane II ph2, Scénic II ph2, component codes 193, 194, 195, 196**).
Check the condition of the engine management computer connector (see **Wiring Diagram Technical Note, Laguna II ph2, Vel Satis ph2, Espace IV ph2, Mégane II ph2, Scénic II ph2, component code 120**).
If the connector or connectors are faulty and if there is a repair procedure (see **Technical Note 6015A, Repairing electrical wiring, Wiring: Precautions for repair**), repair the connector, otherwise replace the wiring.

AFTER REPAIR	Deal with any other faults. Clear the fault memory. Switch off the ignition until the end of the power-latch phase, and carry out a road test followed by a check with the **diagnostic tool**.

EDC16CP33_V18_DF249 / EDC16CP33_V1C_DF249 / EDC16CP33_V54_DF249 / EDC16CP33_V20_DF249 / EDC16CP33_V58_DF249 / EDC16CP33_V5C_DF249 / EDC16CP33_V24_DF249 / EDC16CP33_V04_DF249 / EDC16CP33_V08_DF249 / EDC16CP33_V44_DF249 / EDC16CP33_V4C_DF249 / EDC16CP33_V34_DF249 / EDC16CP33_V38_DF249 / EDC16CP33_V74_DF249 / EDC16CP33_V28_DF249 / EDC16CP33_V62_DF249 / EDC16CP33_V26_DF249 / EDC16CP33_V60_DF249

GETtheMANUALS.org

DF249 CONTINUED	

Check the **continuity** and **insulation** of the following connections:
- **3KW** between components **120** and **193**,
- **3CR** between components **120** and **193,**
- **3KX** between components **120** and **194**,
- **3CS** between components **120** and **194,**
- **3KY** between components **120** and **195,**
- **3CT** between components **120** and **195,**
- **3KZ** between components **120** and **196,**
- **3CU** between components **120** and **196**.

If the connection or connections are faulty and if there is a repair method (see **Technical Note 6015A, Electrical wiring repair, Wiring: Precautions for repair**), repair the wiring, otherwise replace the wiring.

If the fault is still present, contact the Techline.

AFTER REPAIR	Deal with any other faults. Clear the fault memory. Switch off the ignition until the end of the power-latch phase, and carry out a road test followed by a check with the **diagnostic tool**.

GETtheMANUALS.org

DF265 PRESENT OR STORED	INJECTOR No. 1 1.DEF: Internal electronic fault

NOTES	**Priorities when dealing with a number of faults:** **– DF026 Cylinder 1 injector control circuit.**
	Conditions for applying the fault finding procedure to a stored fault: If the fault becomes **present** after: – the engine is started, – a road test.
	IMPORTANT: – cylinder no. 1 is located at the timing end, – observe the cleanliness guidelines and safety advice, – do not disconnect the injector connections with the engine running as this may damage the engine.
	Special notes: If the fault is **present**: – reduced driving pleasure, – injector is not controlled or incorrectly controlled. Use bornier **Elé.1681** for all operations on the engine management computer.
	Use the **Wiring Diagram Technical Note, Laguna II ph2, Vel Satis ph2, Espace IV ph2, Mégane II ph2, Scénic II ph2**.

Apply **Test 10 Poor injector operation**.

AFTER REPAIR	Deal with any other faults. Clear the fault memory. Switch off the ignition until the end of the power-latch phase, and carry out a road test followed by a check with the **diagnostic tool**.

EDC16CP33_V18_DF265 / EDC16CP33_V1C_DF265 / EDC16CP33_V54_DF265 / EDC16CP33_V20_DF265 / EDC16CP33_V58_DF265 / EDC16CP33_V5C_DF265 / EDC16CP33_V24_DF265 / EDC16CP33_V04_DF265 / EDC16CP33_V08_DF265 / EDC16CP33_V44_DF265 / EDC16CP33_V4C_DF265 / EDC16CP33_V34_DF265 / EDC16CP33_V38_DF265 / EDC16CP33_V74_DF265 / EDC16CP33_V28_DF265/ EDC16CP33_V62_DF265 / EDC16CP33_V26_DF265 / EDC16CP33_V60_DF265

GETtheMANUALS.org

DF265 CONTINUED	

Check the condition of the injector no. 1 connector (see **Wiring Diagram Technical Note, Laguna II ph2, Vel Satis ph2, Espace IV ph2, Mégane II ph2, Scénic II ph2, component code 193**).
Check the condition of the engine management computer connector (see **Wiring Diagram Technical Note, Vehicle, component code 120**).
If the connector or connectors are faulty and if there is a repair procedure (see **Technical Note 6015A, Repairing electrical wiring, Wiring: Precautions for repair**), repair the connector, otherwise replace the wiring.

Check the **continuity** and **absence of interference resistance** of the following connections:
- **3KW** between components **120** and **193**,
- **3CR** between components **120** and **193**.

If the connection or connections are faulty and if there is a repair method (see **Technical Note 6015A, Electrical wiring repair, Wiring: Precautions for repair**), repair the wiring, otherwise replace the wiring.

If the fault is still present, contact the Techline.

AFTER REPAIR	Deal with any other faults. Clear the fault memory. Switch off the ignition until the end of the power-latch phase, and carry out a road test followed by a check with the **diagnostic tool**.

GETtheMANUALS.org

DF266 PRESENT OR STORED	INJECTOR No. 2 1.DEF: Internal electronic fault

NOTES	**Priorities when dealing with a number of faults:** – **DF027 Cylinder 2 injector control circuit**.
	Conditions for applying the fault finding procedure to a stored fault: If the fault becomes **present** after: – the engine is started, – a road test.
	IMPORTANT: – Cylinder no. 1 is located at the timing end. – Please observe the cleanliness guidelines and safety advice. – Do not disconnect the injector connections with the engine running as this may damage the engine.
	Special notes: If the fault is **present**: – reduced driving pleasure, – injector is not controlled or incorrectly controlled. Use bornier **Elé.1681** for all operations on the engine management computer.
	Use the **Wiring Diagram Technical Note, Laguna II ph2, Vel Satis ph2, Espace IV ph2, Mégane II ph2, Scénic II ph2**.

Apply **Test 10 Poor injector operation**.

AFTER REPAIR	Deal with any other faults. Clear the fault memory. Switch off the ignition until the end of the power-latch phase, and carry out a road test followed by a check with the **diagnostic tool**.

EDC16CP33_V18_DF266 / EDC16CP33_V1C_DF266 / EDC16CP33_V54_DF266 / EDC16CP33_V20_DF266 / EDC16CP33_V58_DF266 / EDC16CP33_V5C_DF266 / EDC16CP33_V24_DF266 / EDC16CP33_V04_DF266 / EDC16CP33_V08_DF266 / EDC16CP33_V44_DF266 / EDC16CP33_V4C_DF266 / EDC16CP33_V34_DF266 / EDC16CP33_V38_DF266 / EDC16CP33_V74_DF266 / EDC16CP33_V28_DF266 / EDC16CP33_V62_DF266 / EDC16CP33_V26_DF266 / EDC16CP33_V60_DF266

GETtheMANUALS.org

DF266 CONTINUED	

Check the condition of the injector no. 2 connector (see **Wiring Diagram Technical Note, Laguna II ph2, Vel Satis ph2, Espace IV ph2, Mégane II ph2, Scénic II ph2, component code 194**).
Check the condition of the engine management computer connector (see **Wiring Diagram Technical Note, Laguna II ph2, Vel Satis ph2, Espace IV ph2, Mégane II ph2, Scénic II ph2, component code 120**).
If the connector or connectors are faulty and if there is a repair procedure (see **Technical Note 6015A, Repairing electrical wiring, Wiring: Precautions for repair**), repair the connector, otherwise replace the wiring.

Check the **continuity** and **absence of interference resistance** of the following connections:
- **3KX** between components **120** and **194**,
- **3CS** between components **120** and **194.**

If the connection or connections are faulty and if there is a repair method (see **Technical Note 6015A, Electrical wiring repair, Wiring: Precautions for repair**), repair the wiring, otherwise replace the wiring.

If the fault is still present, contact the Techline.

AFTER REPAIR	Deal with any other faults. Clear the fault memory. Switch off the ignition until the end of the power-latch phase, and carry out a road test followed by a check with the **diagnostic tool**.

GETtheMANUALS.org

DF267 PRESENT OR STORED	INJECTOR No. 3 1.DEF: Internal electronic fault

NOTES	**Priorities when dealing with a number of faults:** **– DF028 Cylinder 3 injector control circuit.**
	Conditions for applying the fault finding procedure to a stored fault: If the fault becomes **present** after: – the engine is started, – a road test.
	IMPORTANT: – Cylinder no. 1 is located at the timing end. – Please observe the cleanliness guidelines and safety advice. – Do not disconnect the injector connections with the engine running as this may damage the engine.
	Special notes: If the fault is **present**: – reduced driving pleasure, – injector is not controlled or incorrectly controlled. Use bornier **Elé. 1681** for all operations on the engine management computer connectors.
	Use the **Wiring Diagram Technical Note, Laguna II ph2, Vel Satis ph2, Espace IV ph2, Mégane II ph2, Scénic II ph2**.

Apply **Test 10 Poor injector operation**.

AFTER REPAIR	Deal with any other faults. Clear the fault memory. Switch off the ignition until the end of the power-latch phase, and carry out a road test followed by a check with the **diagnostic tool**.

EDC16CP33_V18_DF267 / EDC16CP33_V1C_DF267 / EDC16CP33_V54_DF267 / EDC16CP33_V20_DF267 / EDC16CP33_V58_DF267 / EDC16CP33_V5C_DF267 / EDC16CP33_V24_DF267 / EDC16CP33_V04_DF267 / EDC16CP33_V08_DF267 / EDC16CP33_V44_DF267 / EDC16CP33_V4C_DF267 / EDC16CP33_V34_DF267 / EDC16CP33_V38_DF267 / EDC16CP33_V74_DF267 / EDC16CP33_V28_DF267 / EDC16CP33_V62_DF267 / EDC16CP33_V26_DF267 / EDC16CP33_V60_DF267

GETtheMANUALS.org

DF267 CONTINUED	

Check the condition of the injector no. 3 connector (see **Wiring Diagram Technical Note, Laguna II ph2, Vel Satis ph2, Espace IV ph2, Mégane II ph2, Scénic II ph2, component code 195**).
Check the condition of the engine management computer connector (see **Wiring Diagram Technical Note, Laguna II ph2, Vel Satis ph2, Espace IV ph2, Mégane II ph2, Scénic II ph2, component code 120**).
If the connector or connectors are faulty and if there is a repair procedure (see **Technical Note 6015A, Repairing electrical wiring, Wiring: Precautions for repair**), repair the connector, otherwise replace the wiring.

Check the **continuity** and **absence of interference resistance** of the following connections:
- **3KY** between components **120** and **195**,
- **3CT** between components **120** and **195.**

If the connection or connections are faulty and if there is a repair method (see **Technical Note 6015A, Electrical wiring repair, Wiring: Precautions for repair**), repair the wiring, otherwise replace the wiring.

If the fault is still present, contact the Techline.

AFTER REPAIR	Deal with any other faults. Clear the fault memory. Switch off the ignition until the end of the power-latch phase, and carry out a road test followed by a check with the **diagnostic tool**.

GETtheMANUALS.org

DF268 PRESENT OR STORED	INJECTOR No. 4 1.DEF: Internal electronic fault

NOTES	**Priorities when dealing with a number of faults:** – **DF029 Cylinder 4 injector control circuit**.
	Conditions for applying the fault finding procedure to a stored fault: If the fault becomes **present** after: – the engine is started, – a road test.
	IMPORTANT: – Cylinder no. 1 is located at the timing end. Please observe the cleanliness guidelines and safety advice. – Do not disconnect the injector connections with the engine running as this may damage the engine.
	Special notes: If the fault is **present**: – reduced driving pleasure, – injector is not controlled or incorrectly controlled. Use bornier **Elé.1681** for all operations on the engine management computer.
	Use the **Wiring Diagram Technical Note, Laguna II ph2, Vel Satis ph2, Espace IV ph2, Mégane II ph2, Scénic II ph2**.

Apply **Test 10 Poor injector operation**.

AFTER REPAIR	Deal with any other faults. Clear the fault memory. Switch off the ignition until the end of the power-latch phase, and carry out a road test followed by a check with the **diagnostic tool**.

EDC16CP33_V18_DF268 / EDC16CP33_V1C_DF268 / EDC16CP33_V54_DF268 / EDC16CP33_V20_DF268 / EDC16CP33_V58_DF268 / EDC16CP33_V5C_DF268 / EDC16CP33_V24_DF268 / EDC16CP33_V04_DF268 / EDC16CP33_V08_DF268 / EDC16CP33_V44_DF268 / EDC16CP33_V4C_DF268 / EDC16CP33_V34_DF268 / EDC16CP33_V38_DF268 / EDC16CP33_V74_DF268 / EDC16CP33_V28_DF268 / EDC16CP33_V62_DF268 / EDC16CP33_V26_DF268 / EDC16CP33_V60_DF268

GETtheMANUALS.org

DF268 CONTINUED	

Check the condition of the injector no. 4 connector (see **Wiring Diagram Technical Note, Laguna II ph2, Vel Satis ph2, Espace IV ph2, Mégane II ph2, Scénic II ph2, component code 196**).
Check the condition of the engine management computer connector (see **Wiring Diagram Technical Note, Laguna II ph2, Vel Satis ph2, Espace IV ph2, Mégane II ph2, Scénic II ph2, component code 120**).
If the connector or connectors are faulty and if there is a repair procedure (see **Technical Note 6015A, Repairing electrical wiring, Wiring: Precautions for repair**), repair the connector, otherwise replace the wiring.

Check the **continuity** and **absence of interference resistance** of the following connections:
- **3KZ** between components **120** and **196**,
- **3CU** between components **120** and **196**.

If the connection or connections are faulty and if there is a repair method (see **Technical Note 6015A, Electrical wiring repair, Wiring: Precautions for repair**), repair the wiring, otherwise replace the wiring.

If the fault is still present, contact the Techline.

AFTER REPAIR	Deal with any other faults. Clear the fault memory. Switch off the ignition until the end of the power-latch phase, and carry out a road test followed by a check with the **diagnostic tool**.

GETtheMANUALS.org

DF272 PRESENT OR STORED	EGR VALVE CONTROL CIRCUIT CO: Open circuit CC.0: Short circuit to earth CC.1: Short circuit to + 12 V CC: Short circuit 1.DEF: Internal electronic fault

NOTES	**Conditions for applying the fault finding procedure to a stored fault:** The fault is declared **present** after: – the ignition is switched on, – the engine is started, – a road test.
	Special notes: If the fault is **present**: – the **EOBD (European On Board Diagnostic)** warning light is lit, – the EGR function is inhibited, Use bornier **Elé. 1681** for all operations on the engine management computer connector.
	Use the **Wiring Diagram Technical Note, Laguna II ph2, Vel Satis ph2, Espace IV ph2, Mégane II ph2, Scénic II ph2**.

CO	***NOTES***	None.

Check the condition of the EGR valve (see **Wiring Diagram Technical Note, Laguna II ph2, Vel Satis ph2, Espace IV ph2, Mégane II ph2, Scénic II ph2, component code 1460 or 169**).
Check the condition of the engine management computer connector (see **Wiring Diagram Technical Note, Laguna II ph2, Vel Satis ph2, Espace IV ph2, Mégane II ph2, Scénic II ph2, component code 120**).
If the connector or connectors are faulty and if there is a repair procedure (see **Technical Note 6015A, Repairing electrical wiring, Wiring: Precautions for repair**), repair the connector, otherwise replace the wiring.

Measure the **resistance** between connections **3VP** and **3VQ** of component **1460** or **169**.
If the resistance of the EGR valve is greater than **400** Ω, replace the valve.

After replacement, run command **SC036 Reinitialise programming** and select **EGR valve** to reinitialise the EGR valve offsets.

AFTER REPAIR	Deal with any other faults. Clear the fault memory. Switch off the ignition until the end of the power-latch phase, and carry out a road test followed by a check with the **diagnostic tool**.

EDC16CP33_V18_DF272 / EDC16CP33_V1C_DF272 / EDC16CP33_V54_DF272 / EDC16CP33_V20_DF272 / EDC16CP33_V58_DF272 / EDC16CP33_V5C_DF272 / EDC16CP33_V24_DF272 / EDC16CP33_V04_DF272 / EDC16CP33_V08_DF272 / EDC16CP33_V44_DF272 / EDC16CP33_V4C_DF272 / EDC16CP33_V34_DF272 / EDC16CP33_V38_DF272 / EDC16CP33_V74_DF272 / EDC16CP33_V28_DF272 / EDC16CP33_V62_DF272 / EDC16CP33_V26_DF272 / EDC16CP33_V60_DF272

GETtheMANUALS.org

DF272 CONTINUED 1	

Check **the continuity** of the following connections:
- **3VP** between components **120** and **1460** or **169**,
- **3VQ** between components **120** and **1460** or **169**.

If the connection or connections are faulty and if there is a repair method (see **Technical Note 6015A, Electrical wiring repair, Wiring: Precautions for repair**), repair the wiring, otherwise replace the wiring.

If the fault is still present, contact the Techline.

CC.0 ***CC.1***	***NOTES***	None.

Check the condition of the EGR valve (see **Wiring Diagram Technical Note, Laguna II ph2, Vel Satis ph2, Espace IV ph2, Mégane II ph2, Scénic II ph2, component code 1460 or 169**).
Check the condition of the engine management computer connector (see **Wiring Diagram Technical Note, Laguna II ph2, Vel Satis ph2, Espace IV ph2, Mégane II ph2, Scénic II ph2, component code 120**).
If the connector or connectors are faulty and if there is a repair procedure (see **Technical Note 6015A, Repairing electrical wiring, Wiring: Precautions for repair**), repair the connector, otherwise replace the wiring.

Measure the **resistance** between connections **3VP** and **3VQ** of component **1460** or **169**.
If the resistance of the EGR valve is less than **1** Ω or greater than **400** Ω, replace the EGR valve.

After replacement, run command **SC036 Reinitialise programming** and select **EGR valve** to reinitialise the EGR valve offsets.

Check the **insulation** from **+ 12 V** of the following connections:
- **3VP** between components **120** and **1460** or **169**,
- **3VQ** between components **120** and **1460** or **169**.

Check the **insulation** to **earth** of the following connections:
- **3VP** between components **120** and **1460** or **169**,
- **3VQ** between components **120** and **1460** or **169**.

If the connection or connections are faulty and if there is a repair method (see **Technical Note 6015A, Electrical wiring repair, Wiring: Precautions for repair**), repair the wiring, otherwise replace the wiring.

If the fault is still present, contact the Techline.

AFTER REPAIR	Deal with any other faults. Clear the fault memory. Switch off the ignition until the end of the power-latch phase, and carry out a road test followed by a check with the **diagnostic tool**.

GETtheMANUALS.org

DF272 CONTINUED 2	

CC	*NOTES*	None.

Check the condition of the EGR valve (see **Wiring Diagram Technical Note, Laguna II ph2, Vel Satis ph2, Espace IV ph2, Mégane II ph2, Scénic II ph2, component code 1460 or 169**).
Check the condition of the engine management computer connector (see **Wiring Diagram Technical Note, Laguna II ph2, Vel Satis ph2, Espace IV ph2, Mégane II ph2, Scénic II ph2, component code 120**).
If the connector or connectors are faulty and if there is a repair procedure (see **Technical Note 6015A, Repairing electrical wiring, Wiring: Precautions for repair**), repair the connector, otherwise replace the wiring.

Measure the **resistance** between connections **3VP** and **3VQ** of component **1460** or **169**.
If the resistance of the EGR valve is less than **1** Ω or greater than **400** Ω, replace the EGR valve.

After replacement, run command **SC036 Reinitialise programming** and select **EGR valve** to reinitialise the EGR valve offsets.

Check the **insulation** between the following connections:
- **3VP** between components **120** and **1460** or **169**,
- **3VQ** between components **120** and **1460** or **169**.

If the connection or connections are faulty and if there is a repair method (see **Technical Note 6015A, Electrical wiring repair, Wiring: Precautions for repair**), repair the wiring, otherwise replace the wiring.

If the fault is still present, contact the Techline.

1.DEF	*NOTES*	**Special notes:** This fault appears when the computer control section has overheated.
		Priorities when dealing with a number of faults: Deal with **CO**, **CC.O**, **CC.1** and **CC** first if they are **present** or **stored**.

If the fault is still present, contact the Techline.

AFTER REPAIR	Deal with any other faults. Clear the fault memory. Switch off the ignition until the end of the power-latch phase, and carry out a road test followed by a check with the **diagnostic tool**.

GETtheMANUALS.org

DF293 PRESENT OR STORED	WATER IN DIESEL FUEL SENSOR 1.DEF: Open circuit on the line or water present in the diesel fuel

NOTES	**IMPORTANT:** Please observe the cleanliness guidelines and safety advice.
	Use the **Wiring Diagram Technical Note, Laguna II ph2, Vel Satis ph2, Espace IV ph2, Mégane II ph2, Scénic II ph2**.

Check that there is no water in the fuel filter.
Bleed the fuel filter and the low pressure diesel circuit if necessary.
Start the engine and wait at least **1 minute** to confirm the repair.
If the fault was **stored** but not **present**, carry out a road test (see **Note**).

If the fault is still present:
Check the **continuity** and **absence of interference resistance** on the following connection:
- **3WT** between the components **120** and **414**.

Check the **+ 12 V after relay supply** to the water detection sensor on the following connection:
- **3FB** of component **414**.

Check that the **earth** is in order on connection **NT** or **M** of component **414**.

If the connection or connections are faulty and if there is a repair method (see **Technical Note 6015A, Electrical wiring repair, Wiring: Precautions for repair**), repair the wiring, otherwise replace the wiring.

Start the engine and wait **at least 1 minute** to confirm the repair.

If the fault is still present, check the conformity of the fuel used:
– Check that the fuel tank has been filled correctly.
– Run **Test 12 Fuel conformity check**.
– If the diesel fuel is not correct:
  – Replace the diesel fuel.
  – Change the diesel filter.
  – Bleed the low pressure diesel circuit.

AFTER REPAIR	Deal with any other faults. Clear the fault memory. Switch off the ignition until the end of the power-latch phase, and carry out a road test followed by a check with the **diagnostic tool**.

EDC16CP33_V18_DF293 / EDC16CP33_V1C_DF293 / EDC16CP33_V54_DF293 / EDC16CP33_V20_DF293 / EDC16CP33_V58_DF293 / EDC16CP33_V5C_DF293 / EDC16CP33_V24_DF293 / EDC16CP33_V04_DF293 / EDC16CP33_V08_DF293 / EDC16CP33_V44_DF293 / EDC16CP33_V4C_DF293 / EDC16CP33_V34_DF293 / EDC16CP33_V38_DF293 / EDC16CP33_V74_DF293 / EDC16CP33_V28_DF293 / EDC16CP33_V62_DF293 / EDC16CP33_V26_DF293 / EDC16CP33_V60_DF293

GETtheMANUALS.org

DF293 CONTINUED	

If none of these checks reveal any faults:
– Replace the water detection sensor.
– Clear the fault.
Start the engine and wait **at least 1 minute** to confirm the repair.

Note:
When the water level in the fuel filter unit is below the sensor's electrodes, some driving conditions (cornering, gradients) may result in water being detected (in fact, the sensor's off-centre position in the fuel filter unit, combined with the driving conditions, causes water to be detected).

AFTER REPAIR	Deal with any other faults. Clear the fault memory. Switch off the ignition until the end of the power-latch phase, and carry out a road test followed by a check with the **diagnostic tool**.

GETtheMANUALS.org

DF297 PRESENT OR STORED	PRESSURE SENSOR 1. DEF: Absent

NOTES	**Conditions for applying fault finding procedures to stored faults:** The fault is declared **present** after the engine is started or following a road test.
	Special notes: If the fault is **present:** – particle filter regeneration is inhibited, – blue/white smoke and black particles coming from the exhaust, – the **EOBD (European On Board Diagnostic)** warning light will come on after three consecutive driving cycles (starting **+ 5 seconds** + switch off the ignition and wait **40 seconds**). – The **level 1** warning light is lit (for **Vdiag 20, 24, 58**, **5C, 26, 28, 60 and 62**).
	Priorities when dealing with a number of faults: **– DF315 Particle filter diff. pressure sensor if present or stored.** **– DF717 Particle filter upstream pressure if it is present or stored.**
	NOTE: In the long term, this fault may lead to premature wear and a greater risk of turbocharger failure.

Check the condition of the differential pressure sensor connector (see **Wiring Diagram Technical Note, Laguna II ph2, Vel Satis ph2, Espace IV ph2, Mégane II ph2, Scénic II ph2, component code 1290**).
Check the condition of the engine management computer connector (see **Wiring Diagram Technical Note, Laguna II ph2, Vel Satis ph2, Espace IV ph2, Mégane II ph2, Scénic II ph2, component code 120**).
If the connector or connectors are faulty and if there is a repair procedure (see **Technical Note 6015A, Repairing electrical wiring, Wiring: Precautions for repair**), repair the connector, otherwise replace the wiring.

AFTER REPAIR	Deal with any other faults. Clear the fault memory. Switch off the ignition until the end of the power-latch phase, and carry out a road test followed by a check with the **diagnostic tool**.

EDC16CP33_V18_DF297 / EDC16CP33_V1C_DF297 / EDC16CP33_V54_DF297 / EDC16CP33_V20_DF297 / EDC16CP33_V58_DF297 / EDC16CP33_V5C_DF297 / EDC16CP33_V24_DF297 / EDC16CP33_V28_DF297 / EDC16CP33_V62_DF297 / EDC16CP33_V26_DF297 / EDC16CP33_V60_DF297

GETtheMANUALS.org

DF297 CONTINUED	

Check the particle filter is present.
If it is present:
Visually check that the particle filter is in good condition by positioning the vehicle on a lift:
– not damaged (no abnormal welds, if necessary compare it with another vehicle fitted with particle filter),
– if there are After-Sales sleeves, as a result of a previous operation, check that the particle filter's contents were not emptied out when it was removed.

If the particle filter is not working correctly or is absent:
– replace it,
– run command **SC036 Reinitialise programming** and select **After particle filter replacement** (see **Interpretation of commands**),
– switch off the ignition and wait for the **diagnostic tool** message (maximum time **8 minutes**): **Loss of dialogue with the computer: EDC16 CP33, check the tool connection and the computer supply voltage**,
– then switch on the ignition again,
– clear the faults from the computer memory (this operation must be carried out within **3 minutes** of the ignition being switched on).
If the fault is still present, contact the Techline.

AFTER REPAIR	Deal with any other faults. Clear the fault memory. Switch off the ignition until the end of the power-latch phase, and carry out a road test followed by a check with the **diagnostic tool**.

GETtheMANUALS.org

DF304 PRESENT OR STORED	EGR BY-PASS CIRCUIT CO: Open circuit CC.0: Short circuit to earth CC.1: Short circuit to + 12 V 1.DEF: Internal electronic fault

NOTES	**Conditions for applying the fault finding procedure to a stored fault:** The fault reappears when the ignition is switched on.
	Special notes: Use bornier **Elé. 1681** for all operations on the engine management computer connectors.
	Use the **Wiring Diagram Technical Note, Laguna II ph2, Vel Satis ph2, Espace IV ph2, Mégane II ph2, Scénic II ph2**.

CO	***NOTES***	None.

Check the condition of the EGR bypass solenoid valve connector (see **Wiring Diagram Technical Note, Laguna II ph2, Vel Satis ph2, Espace IV ph2, Mégane II ph2, Scénic II ph2, component code 1301**).
Check the condition of the engine management computer connector (see **Wiring Diagram Technical Note, Laguna II ph2, Vel Satis ph2, Espace IV ph2, Mégane II ph2, Scénic II ph2, component code 120**).
If the connector or connectors are faulty and if there is a repair procedure (see **Technical Note 6015A, Repairing electrical wiring, Wiring: Precautions for repair**), repair the connector, otherwise replace the wiring.

Measure the **resistance** between connections **3FB** and **3TP** of component **1301.**
If the resistance is greater than **1 k**Ω or less than **6** Ω, replace the EGR bypass solenoid valve.

Check **the continuity** of the following connection:
- **3TP** between components **120** and **1301**.

Check the **+ 12 V after relay supply** to the EGR bypass solenoid valve on the following connection:
- **3FB** of component **1301**.

If the connection or connections are faulty and if there is a repair method (see **Technical Note 6015A, Electrical wiring repair, Wiring: Precautions for repair**), repair the wiring, otherwise replace the wiring.

If the fault is still present, replace the EGR by-pass solenoid valve.

AFTER REPAIR	Deal with any other faults. Clear the fault memory. Switch off the ignition until the end of the power-latch phase, and carry out a road test followed by a check with the **diagnostic tool**.

EDC16CP33_V18_DF304 / EDC16CP33_V1C_DF304 / EDC16CP33_V54_DF304 / EDC16CP33_V20_DF304 / EDC16CP33_V58_DF304 / EDC16CP33_V5C_DF304 / EDC16CP33_V24_DF304 / EDC16CP33_V04_DF304 / EDC16CP33_V08_DF304 / EDC16CP33_V44_DF304 / EDC16CP33_V4C_DF304 / EDC16CP33_V34_DF304 / EDC16CP33_V38_DF304 / EDC16CP33_V74_DF304 / EDC16CP33_V28_DF304 / EDC16CP33_V62_DF304 / EDC16CP33_V26_DF304 / EDC16CP33_V60_DF304

GETtheMANUALS.org

DF304 CONTINUED 1	

CC.0	***NOTES***	None.

Check the condition of the EGR bypass solenoid valve connector (see **Wiring Diagram Technical Note, Laguna II ph2, Vel Satis ph2, Espace IV ph2, Mégane II ph2, Scénic II ph2, component code 1301**).
Check the condition of the engine management computer connector (see **Wiring Diagram Technical Note, Laguna II ph2, Vel Satis ph2, Espace IV ph2, Mégane II ph2, Scénic II ph2, component code 120**).
If the connector or connectors are faulty and if there is a repair procedure (see **Technical Note 6015A, Repairing electrical wiring, Wiring: Precautions for repair**), repair the connector, otherwise replace the wiring.

Measure the **resistance** between connections **3FB** and **3TP** of component **1301.**
If the resistance is greater than **1 k**Ω or less than **6** Ω, replace the EGR bypass solenoid valve.

Check the **continuity** and **insulation** from **earth** of the following connection:
- **3TP** between components **120** and **1301**.

Check the **+ 12 V after relay supply** to the EGR bypass solenoid valve on the following connection:
- **3FB** of component **1301**.

If the connection or connections are faulty and if there is a repair method (see **Technical Note 6015A, Electrical wiring repair, Wiring: Precautions for repair**), repair the wiring, otherwise replace the wiring.

If the fault is still present, replace the EGR by-pass solenoid valve.

AFTER REPAIR	Deal with any other faults. Clear the fault memory. Switch off the ignition until the end of the power-latch phase, and carry out a road test followed by a check with the **diagnostic tool**.

GETtheMANUALS.org

DF304 CONTINUED 2	

CC.1	***NOTES***	None.

Check the condition of the EGR bypass solenoid valve connector (see **Wiring Diagram Technical Note, Laguna II ph2, Vel Satis ph2, Espace IV ph2, Mégane II ph2, Scénic II ph2, component code 1301**). Check the condition of the engine management computer connector (see **Wiring Diagram Technical Note, Laguna II ph2, Vel Satis ph2, Espace IV ph2, Mégane II ph2, Scénic II ph2, component code 120**). If the connector or connectors are faulty and if there is a repair procedure (see **Technical Note 6015A, Repairing electrical wiring, Wiring: Precautions for repair**), repair the connector, otherwise replace the wiring.
Measure the **resistance** between connections **3FB** and **3TP** of component **1301**. If the resistance is greater than **1 k**Ω or less than **6** Ω, replace the EGR bypass solenoid valve.
Check the **continuity** and **insulation** from + **12 V** of the following connection: • **3TP** between components **120** and **1301**. If the connection is faulty and there is a repair procedure (see **Technical Note 6015A, Electrical wiring repair, Wiring: Precautions for repair**), repair the wiring, otherwise replace it.
If the fault is still present, replace the EGR by-pass solenoid valve.

AFTER REPAIR	Deal with any other faults. Clear the fault memory. Switch off the ignition until the end of the power-latch phase, and carry out a road test followed by a check with the **diagnostic tool**.

GETtheMANUALS.org

DF304 CONTINUED 3	

1.DEF	*NOTES*	**Special notes:** This fault appears when the computer control section has overheated. A road test may be necessary to reveal this fault.

Check the condition of the EGR bypass solenoid valve connector (see **Wiring Diagram Technical Note, Laguna II ph2, Vel Satis ph2, Espace IV ph2, Mégane II ph2, Scénic II ph2, component code 1301**).
Check the condition of the engine management computer connector (see **Wiring Diagram Technical Note, Laguna II ph2, Vel Satis ph2, Espace IV ph2, Mégane II ph2, Scénic II ph2, component code 120**).
If the connector or connectors are faulty and there is a repair procedure (see **Technical Note 6015A, Electrical wiring repair, Wiring: Precautions for repair**), repair the connector, otherwise replace the wiring.

Measure the **resistance** between connections **3FB** and **3TP** of component **1301.**
If the resistance is greater than **1 kΩ** or less than **6 Ω**, replace the EGR bypass solenoid valve.

Check the **continuity** and **the absence of interference resistance** on the following connection:
- **3TP** between components **120** and **1301**.

Check the **+ 12 V after relay supply** to the EGR bypass solenoid valve on the following connection:
- **3FB** of component **1301**.

If the connection or connections are faulty and if there is a repair method (see **Technical Note 6015A, Electrical wiring repair, Wiring: Precautions for repair**), repair the wiring, otherwise replace the wiring.

If the fault is still present, contact the Techline.

AFTER REPAIR	Deal with any other faults. Clear the fault memory. Switch off the ignition until the end of the power-latch phase, and carry out a road test followed by a check with the **diagnostic tool**.

GETtheMANUALS.org

DF308 PRESENT OR STORED	CLOGGED PARTICLE FILTER 1.DEF: Maximum limit

NOTES	**Conditions for applying fault finding procedures to stored faults:** The fault is declared **present** after the engine is started or following a road test.
	Special notes: If the fault is **present**: – particle filter regeneration is inhibited, – the EGR function is inhibited, – the vehicle performance is reduced, – the **level 1** warning light is lit and a warning message (or warning light) is displayed on the instrument panel, – the **EOBD (European On Board Diagnostic)** warning light is lit (except **Vdiag 18**, **1C, 24** and **54**).
	Priorities when dealing with a number of faults: Deal with the following faults first: **– DF315 Particle filter differential pressure sensor if it is present.** **– DF308 if DF315 is stored.** **– DF717 Particle filter upstream pressure if it is present or stored.** **– DF645 Damper valve position regulation if it is present or stored.** **– DF272 EGR valve control circuit if it is present or stored.** **– DF647 EGR valve position regulation if it is present or stored.** **– DF309 Particle filter downstream temperature sensor if it is present or stored.** **– DF899 Regeneration temperature threshold exceeded if it is present or stored.** **– DF310 Particle filter upstream temperature sensor if it is present or stored.** **– DF652 Turbine upstream temperature sensor circuit if it is present or stored.**

diff.*: Differential
temp.*: Temperature

AFTER REPAIR	Deal with any other faults. Clear the fault memory. Switch off the ignition until the end of the power-latch phase, and carry out a road test followed by a check with the **diagnostic tool**.

EDC16CP33_V18_DF308 / EDC16CP33_V1C_DF308 / EDC16CP33_V54_DF308 / EDC16CP33_V20_DF308 / EDC16CP33_V58_DF308 / EDC16CP33_V5C_DF308 / EDC16CP33_V24_DF308 / EDC16CP33_V28_DF308 / EDC16CP33_V62_DF308 / EDC16CP33_V26_DF308 / EDC16CP33_V60_DF308

GETtheMANUALS.org

DF308 CONTINUED	

1.DEF	*NOTES*	None.

The fault appears if the **weight** of soot contained in the particle filter is:
– Vdiag 18 and 54: above 56 g.
– Vdiag 1C, 20, 24, 5C, 58: above 58 g
– Vdiag 26 and 28: greater than 68 g.

If **Vdiag 18**, reprogram the computer (see **Replacement of components**). Then apply the procedure corresponding to the new Vdiag.

For the other **Vdiag**:
Check that there are no leaks or blockages in the exhaust pipe,
Repair if necessary.

Clear fault **DF308 Present** or **Stored**.

If the fault is still present, contact the Techline.

AFTER REPAIR	Deal with any other faults. Clear the fault memory. Switch off the ignition until the end of the power-latch phase, and carry out a road test followed by a check with the **diagnostic tool**.

GETtheMANUALS.org

DF309 PRESENT OR STORED	PARTICLE FILT. DOWNSTREAM TEMP. SENSOR CC.0: Short circuit to earth CO.1: Open circuit or short circuit to +12 V

NOTES	**Conditions for applying fault finding procedures to stored faults:** The fault becomes **present** if: – ignition is on **(CC.0)**, – following a road test, engine warm **(CO.1)**.
	IMPORTANT: **The particle filter downstream temperature sensor only measures temperatures greater than 50°C.**
	Special notes: – If the fault is **present**: – After-Sales particle filter regeneration is inhibited, – particle filter fault finding is inhibited (for **Vdiags 18, 1C** and **54**).

CC.0	***NOTES***	None.

Check the condition of the particle filter downstream temperature sensor connector (see **Wiring Diagram Technical Note, Laguna II ph2, Vel Satis ph2, Espace IV ph2, Mégane II ph2, Scénic II ph2, component code 1288**).
Check the condition of the engine management computer connector (see **Wiring Diagram Technical Note, Laguna II ph2, Vel Satis ph2, Espace IV ph2, Mégane II ph2, Scénic II ph2, component code 120**).
If the connector or connectors are faulty and if there is a repair procedure (see **Technical Note 6015A, Repairing electrical wiring, Wiring: Precautions for repair**), repair the connector, otherwise replace the wiring.

Check the **insulation** from **earth** of the following connections:
- **3TG** between components **120** and **1288**,
- **3XU** between components **120** and **1288**.

If the connection or connections are faulty and if there is a repair method (see **Technical Note 6015A, Electrical wiring repair, Wiring: Precautions for repair**), repair the wiring, otherwise replace the wiring.

If the fault is still present, replace the particle filter downstream temperature sensor.

AFTER REPAIR	Deal with any other faults. Clear the fault memory. Switch off the ignition until the end of the power-latch phase, and carry out a road test followed by a check with the **diagnostic tool**.

EDC16CP33_V18_DF309 / EDC16CP33_V1C_DF309 / EDC16CP33_V54_DF309 / EDC16CP33_V20_DF309 / EDC16CP33_V58_DF309 / EDC16CP33_V5C_DF309 / EDC16CP33_V24_DF309 / EDC16CP33_V60_DF309 / EDC16CP33_V62_DF309

GETtheMANUALS.org

DF309 CONTINUED	

CO.1	***NOTES***	None.

Check the condition of the particle filter downstream temperature sensor connector (see **Wiring Diagram Technical Note, Laguna II ph2, Vel Satis ph2, Espace IV ph2, Mégane II ph2, Scénic II ph2, component code 1288**).
Check the condition of the engine management computer connector (see **Wiring Diagram Technical Note, Laguna II ph2, Vel Satis ph2, Espace IV ph2, Mégane II ph2, Scénic II ph2, component code 120**).
If the connector or connectors are faulty and if there is a repair procedure (see **Technical Note 6015A, Repairing electrical wiring, Wiring: Precautions for repair**), repair the connector, otherwise replace the wiring.

Check **the continuity** and **insulation** from **+ 12 V** of the following connections:
- **3TG** between components **120** and **1288**,
- **3XU** between components **120** and **1288**.

If the connection or connections are faulty and if there is a repair method (see **Technical Note 6015A, Electrical wiring repair, Wiring: Precautions for repair**), repair the wiring, otherwise replace the wiring.

If the fault is still present, replace the particle filter downstream temperature sensor.

AFTER REPAIR	Deal with any other faults. Clear the fault memory. Switch off the ignition until the end of the power-latch phase, and carry out a road test followed by a check with the **diagnostic tool**.

GETtheMANUALS.org

DF310 PRESENT OR STORED	PARTICLE FILT. UPSTREAM TEMP SENSOR CC.0: Short circuit to earth CO.1: Open circuit or short circuit to +12 V

NOTES	**Conditions for applying fault finding procedures to stored faults:** The fault becomes **present** if: – ignition is on **(CC.0)**, – following a road test, engine warm **(CO.1)**.
	Special notes: If the fault is **present**: – particle filter regeneration is inhibited, – the **level 1** warning light is lit, – the **EOBD (European On Board Diagnostic)** warning light will come on after three consecutive driving cycles (starting **+ 5 seconds** + switching off the ignition and waiting for **1 minute**).
	IMPORTANT: The particle filter upstream temperature sensor only measures temperatures above **50°C**.

CC.0	***NOTES***	None.

Check the condition of the particle filter upstream temperature sensor connector (see **Wiring Diagram Technical Note, Laguna II ph2, Vel Satis ph2, Espace IV ph2, Mégane II ph2, Scénic II ph2, component code 1287**).
Check the condition of the engine management computer connector (see **Wiring Diagram Technical Note, Laguna II ph2, Vel Satis ph2, Espace IV ph2, Mégane II ph2, Scénic II ph2, component code 120**).
If the connector or connectors are faulty and there is a repair procedure (see **Technical Note 6015A, Electrical wiring repair, Wiring: Precautions for repair**), repair the connector, otherwise replace the wiring.

Check the **insulation** from **earth** of the following connections:
- **3XT** between components **120** and **1287**,
- **3TD** between components **120** and **1287.**

If the connection or connections are faulty and if there is a repair method (see **Technical Note 6015A, Electrical wiring repair, Wiring: Precautions for repair**), repair the wiring, otherwise replace the wiring.

AFTER REPAIR	Deal with any other faults. Clear the fault memory. Switch off the ignition until the end of the power-latch phase, and carry out a road test followed by a check with the **diagnostic tool**.

EDC16CP33_V18_DF310 / EDC16CP33_V1C_DF310 / EDC16CP33_V54_DF310 / EDC16CP33_V20_DF310 / EDC16CP33_V58_DF310 / EDC16CP33_V5C_DF310 / EDC16CP33_V24_DF310 / EDC16CP33_V28_DF310 / EDC16CP33_V62_DF310 / EDC16CP33_V26_DF310 / EDC16CP33_V60_DF310

GETtheMANUALS.org

DF310 CONTINUED	

If the wiring of the particle filter downstream temperature sensor, component code **1288**, is present (with or without the sensor being present), check the electrical insulation in relation to **+ 12 V** between the following connections:
– **3XU** between components **120** and **1288**,
– **3TG** between components **120** and **1288**.
If the connection or connections are faulty and there is a repair procedure (see **Technical Note 6015A, Electrical wiring repair, Wiring: Precautions for repair**), repair the wiring, otherwise replace it.

If the fault is still present, replace the particle filter upstream temperature sensor.

CO.1	*NOTES*	None.

Check the condition of the particle filter upstream temperature sensor connector (see **Wiring Diagram Technical Note, Laguna II ph2, Vel Satis ph2, Espace IV ph2, Mégane II ph2, Scénic II ph2, component code 1287**).
Check the condition of the engine management computer connector (see **Wiring Diagram Technical Note, Laguna II ph2, Vel Satis ph2, Espace IV ph2, Mégane II ph2, Scénic II ph2, component code 120**).
If the connector or connectors are faulty and if there is a repair procedure (see **Technical Note 6015A, Repairing electrical wiring, Wiring: Precautions for repair**), repair the connector, otherwise replace the wiring.

Check the **continuity** and **insulation** from **+ 12 V** of the following connections:

- **3XT** between components **120** and **1287**,
- **3TD** between components **120** and **1287.**

If the connection or connections are faulty and if there is a repair method (see **Technical Note 6015A, Electrical wiring repair, Wiring: Precautions for repair**), repair the wiring, otherwise replace the wiring.

If the fault is still present, replace the particle filter upstream temperature sensor.

AFTER REPAIR	Deal with any other faults. Clear the fault memory. Switch off the ignition until the end of the power-latch phase, and carry out a road test followed by a check with the **diagnostic tool**.

GETtheMANUALS.org

DF311 PRESENT OR STORED	FAILED REGENERATIONS LIMIT EXCEEDED

NOTES	**Conditions for applying fault finding procedures to stored faults:** The fault is declared **present** after the engine is started or following a road test.
	Special notes: If the fault is **present**: – the **level 1** warning light is lit, – particle filter regenerations when driving are inhibited.
	Priorities when dealing with a number of faults: Deal with the following faults first: **– DF308 Particle filter clogged if it is present or stored.** **– DF315 Particle filter diff.* pressure sensor if it is present or stored.** **– DF717 Particle filter upstream pressure if it is present or stored.** **– DF569 Turbocharging circuit if it is present or stored.** **– DF309 Particle filter downstream temperature sensor if it is present or stored.** **– DF899 Regeneration temperature threshold exceeded if it is present or stored.** **– DF310 Particle filter upstream temperature sensor if it is present or stored.** **– DF652 Turbine upstream temperature sensor circuit if it is present or stored.** **– DF272 EGR valve control circuit if it is present or stored.** **– DF647 EGR valve position regulation if it is present or stored.**

diff.*: Differential
temp.*: Temperature

AFTER REPAIR	Deal with any other faults. Clear the fault memory. Switch off the ignition until the end of the power-latch phase, and carry out a road test followed by a check with the **diagnostic tool**.

EDC16CP33_V18_DF311 / EDC16CP33_V1C_DF311 / EDC16CP33_V54_DF311 / EDC16CP33_V20_DF311 / EDC16CP33_V58_DF311 / EDC16CP33_V5C_DF311 / EDC16CP33_V24_DF311 / EDC16CP33_V26_DF311 / EDC16CP33_V60_DF311

GETtheMANUALS.org

DF311 CONTINUED	

The fault appears following:
– **7** failed regenerations when driving for **Laguna II ph2**.
– Between **9** and **11** failed regenerations when driving for **Mégane II ph2, Vel Satis ph2** and **Espace IV ph2**.

If **Vdiag 18**, reprogram the computer (see **Replacement of components**). Then apply the procedure corresponding to the new Vdiag.

For the other **Vdiag**:
Check that there are no leaks or blockages in the exhaust pipe,
Repair if necessary.

Explain the regeneration procedure when driving to the customer to avoid unnecessary repairs: see **SECTION D** in the interpretation of **DF312 Speed request**.

If the fault is still present, contact the Techline.

diff.*: Differential
temp.*: Temperature

AFTER REPAIR	Deal with any other faults. Clear the fault memory. Switch off the ignition until the end of the power-latch phase, and carry out a road test followed by a check with the **diagnostic tool**.

GETtheMANUALS.org

DF312 PRESENT OR STORED	SPEED REQUEST

NOTES	**Conditions for applying fault finding procedures to stored faults:** The fault is declared **present** after the engine is started or following a road test.
	Special notes: If the fault is **present**: – the special **Regenerate particle filter** warning light is lit or a warning message is displayed on the instrument panel, – A specific kind of driving is required to bring about regeneration of the particle filter when driving.
	Priorities when dealing with a number of faults: Firstly, deal with the following faults: – **DF308 Particle filter clogged** if it is **present** or **stored**. – **DF311 Failed regenerations limit exceeded** if it is **present**. – **DF315 Particle filter diff* pressure sensor** if it is **present** or **stored**. – **DF717 Particle filter upstream pressure** if it is **present** or **stored**.

diff.*: Differential

AFTER REPAIR	Deal with any other faults. Clear the fault memory. Switch off the ignition until the end of the power-latch phase, and carry out a road test followed by a check with the **diagnostic tool**.

EDC16CP33_V18_DF312 / EDC16CP33_V1C_DF312 / EDC16CP33_V54_DF312 / EDC16CP33_V20_DF312 / EDC16CP33_V58_DF312 / EDC16CP33_V5C_DF312 / EDC16CP33_V24_DF312 / EDC16CP33_V26_DF312 / EDC16CP33_V60_DF312

GETtheMANUALS.org

DF312 CONTINUED 1	

The fault appears:

– **Vdiag 18** and **1C:**
4 failed regeneration attempts (for **Laguna II ph2**) and 5 failed regeneration attempts (for **Vel Satis ph2** and **Espace IV ph2**) when driving and the weight of soot in the particle filter is above **20 g**.

– Vdiag 54:
5 failed regeneration attempts (for **Mégane ph2**) when driving and the weight of soot in the particle filter is above **20 g**.

– Vdiag 20, 24 and 26:
4 failed regeneration attempts (for **Laguna II ph2**) and 5 failed regeneration attempts (for **Vel Satis ph2** and **Espace IV ph2**) and 7 failed regeneration attempts (for **Espace IV ph2, M9R 761** only) when driving and the weight of soot in the particle filter is above **20 g** for **M9R760 and M9R762** or **36 g** for **M9R761 and M9R763**.

– **Vdiag 5C** and **58:**
5 failed regeneration attempts (for **Mégane II ph2**, **M9R 722/724** only) and 7 failed regeneration attempts (for **Mégane II ph2**, **M9R 721** only) when driving and the weight of soot in the particle filter is above **20 g** for **M9R 722/724** or **36 g** for **M9R 721**.

PART A
The flow chart on the following page allows analysis of the driving profile and the causes for the warning to come on:

AFTER REPAIR	Deal with any other faults. Clear the fault memory. Switch off the ignition until the end of the power-latch phase, and carry out a road test followed by a check with the **diagnostic tool**.

GETtheMANUALS.org

DF312 CONTINUED 2

Repair request with **DF312 Speed request present** or **stored** ONLY

Read the information from the**Particle filter history sub-function: PR784** to **PR793 Stored DF312 No. 1 to No. 10**

Are **PR784 to PR793** all equal to **0 miles (0 km)**? — YES → B

NO

Among these parameters (**PR784 to PR793**):
– Find the parameter with the highest mileage: it is the **Mileage of the last DF312**.
– Note the parameter index on the order of repair with the relevant mileage value.
E.g.: **PR787 = 2794 miles (4657 Km)**.

Read the information in the **Particle filter history** sub-function:
PR794 to **PR803 Stored regeneration failures No. 1 to No. 10**.

Vdiag 18, 1C, 54

Is at least one of parameters **PR794** to **PR803 = 19660 miles (32766 km)**? — YES → B

NO

Vdiag 20, 58, 5C and 24

Identify the distance(s) from the values of parameters **PR794** to **PR803 Stored regeneration failures No. 1 to No. 10** included between the **Distance of the last DF312** and the **Distance of the last DF312** - **120 miles (- 200 km)**. This is the **Distance of the most recent failures**.
Example: **2674 miles (4457 km) < PR801 = 2760 miles (4600 km) < 2794 miles (4657 km)**

A

B

AFTER REPAIR	Deal with any other faults. Clear the fault memory. Switch off the ignition until the end of the power-latch phase, and carry out a road test followed by a check with the **diagnostic tool**.

GETtheMANUALS.org

DF312 CONTINUED 3

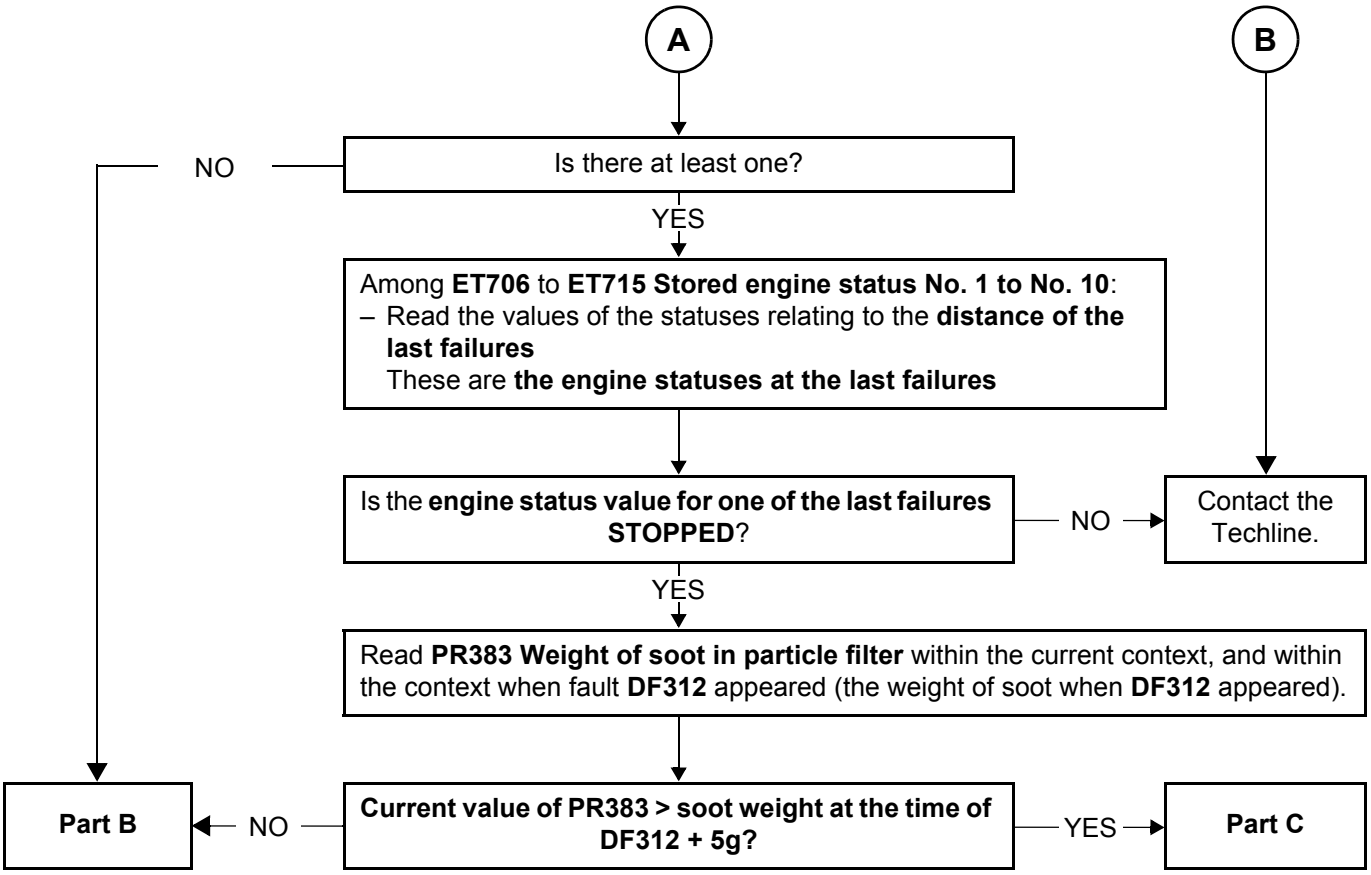

AFTER REPAIR	Deal with any other faults. Clear the fault memory. Switch off the ignition until the end of the power-latch phase, and carry out a road test followed by a check with the **diagnostic tool**.

GETtheMANUALS.org

DF312 CONTINUED 4	

PART B

1. No particle filter regeneration.

2. Write on the repair order the parameter and status relating to the last failure:

– Mileage of the last DF312 Speed request.
– Mileage of the last failures.
– Engine statuses of the last failures.
E.g.: **PR787 = 2794 miles (4657 km)**; **PR801 = 2760 miles (4600 km)**; engine status = STOPPED

3. Interpretation of the values written on the repair order by the service advisor for the customer:

Before the last time the **particle filter warning light or message** came on (appeared at the **Mileage of the last DF312**), the customer had not respected the driving recommendations: the failure that occurred at the **Mileage of the last failure** is due to the engine being switched off.

4. Explain to the customer the procedure to turn off the warning light, making use of the parameters noted in the repair order: see **PART D**.

PART C

If **Vdiag 18**:
Reprogram the computer in **Vdiag 1C**.
Then apply the procedure corresponding to **Vdiag 1C**.

If **Vdiag 1C, 54, 58, 20** and **24**:
– Check that there are no leaks or blockages in the exhaust pipe,
Repair if necessary.
– Carry out an After-Sales regeneration with **approval from the Techline**.
– Follow the procedure for command **SC017 Particle filter regeneration** (see **Interpretation of commands**).
– Explain to the customer the procedure for regeneration when driving to avoid unnecessary repairs: see **PART D**.

AFTER REPAIR	Deal with any other faults. Clear the fault memory. Switch off the ignition until the end of the power-latch phase, and carry out a road test followed by a check with the **diagnostic tool**.

GETtheMANUALS.org

DF312 CONTINUED 5	

PART D
Procedure to switch off the Particle filter message or warning light on the instrument panel

Certain types of driving can trigger illumination of the particle filter warning light or message, and activate fault **DF312**. The customer must carry out a specific driving operation (cf. vehicle user manual) that consists of:

1. When the engine is warm, drive at a speed greater than **48 mph (80 km/h)** for **2 minutes** to trigger the regeneration procedure.

2. Keep driving at an average speed of **48 mph (80 km/h)**, until the "particle filter" warning light or message on the instrument panel goes out. In order for the procedure to succeed, it is necessary to drive without stopping the engine or leaving the engine running at idle speed for an extended period of time. The regeneration time depends on the vehicle and driving conditions but should last for **20 minutes maximum.**

If regeneration fails when driving (the warning light does not go out or the service warning light comes on), check the exhaust pipe for leaks or blockage. Repair if necessary. Proceed with an After Sales regeneration. Run command **SC017** (see **Interpretation of commands**).

If the fault is still present, contact the Techline.

AFTER REPAIR	Deal with any other faults. Clear the fault memory. Switch off the ignition until the end of the power-latch phase, and carry out a road test followed by a check with the **diagnostic tool**.

GETtheMANUALS.org

DF315 PRESENT OR STORED	PARTICLE FILTER DIFFERENTIAL PRESSURE SENSOR CO: Open circuit CO.0: Open circuit or short circuit to earth CC.1: Short circuit to + 12 V

NOTES	**Conditions for applying fault finding procedures to stored faults:** The fault is declared **present** after the engine is started or following a road test.
	Special notes: If the fault is **present:** – the **level 1** warning light is lit, – the **EOBD (European On Board Diagnostic)** warning light will come on after three consecutive driving cycles (starting **+ 5 seconds** + switching off the ignition and waiting for **1 minute**), – the particle filter fault finding procedure is inhibited, – particle filter regeneration is inhibited.
	Priorities when dealing with a number of faults: – **DF315** if it is **present**. – **DF308 Particle filter clogged** if **DF315** is **stored** and **DF308 is present**. – **DF011 Sensor supply voltage no. 1** if it is **present** or **stored**.

CC.1	***NOTES***	None.

Check the condition of the differential pressure sensor connector (see **Wiring Diagram Technical Note, Laguna II ph2, Vel Satis ph2, Espace IV ph2, Mégane II ph2, Scénic II ph2, component code 1290**).
Check the condition of the engine management computer connector (see **Wiring Diagram Technical Note, Laguna II ph2, Vel Satis ph2, Espace IV ph2, Mégane II ph2, Scénic II ph2, component code 120**).
If the connector or connectors are faulty and if there is a repair procedure (see **Technical Note 6015A, Repairing electrical wiring, Wiring: Precautions for repair**), repair the connector, otherwise replace the wiring.

AFTER REPAIR	Deal with any other faults. Clear the fault memory. Switch off the ignition until the end of the power-latch phase, and carry out a road test followed by a check with the **diagnostic tool**.

GETtheMANUALS.org

DF315 CONTINUED	

Check the continuity and insulation from + 12 V of the following connections:

- **3TL** between components **120** and **1290**,
- **3TM** between components **120** and **1290.**

If the connection or connections are faulty and if there is a repair method (see **Technical Note 6015A, Electrical wiring repair, Wiring: Precautions for repair**), repair the wiring, otherwise replace the wiring.

If the fault is still present, replace the differential pressure sensor.

CO.0 CO	***NOTES***	None.

Check the condition of the differential pressure sensor connector (see **Wiring Diagram Technical Note, Laguna II ph2, Vel Satis ph2, Espace IV ph2, Mégane II ph2, Scénic II ph2, component code 1290**).
Check the condition of the engine management computer connector (see **Wiring Diagram Technical Note, Laguna II ph2, Vel Satis ph2, Espace IV ph2, Mégane II ph2, Scénic II ph2, component code 120**).
If the connector or connectors are faulty and if there is a repair procedure (see **Technical Note 6015A, Repairing electrical wiring, Wiring: Precautions for repair**), repair the connector, otherwise replace the wiring.

Check the **continuity** and **insulation** to **earth** of the following connections:

- **3TL** between components **120** and **1290**,
- **3TM** between components **120** and **1290.**

If the connection or connections are faulty and if there is a repair method (see **Technical Note 6015A, Electrical wiring repair, Wiring: Precautions for repair**), repair the wiring, otherwise replace the wiring.

If the wiring of the particle filter downstream temperature sensor, component code **1288**, is present (with or without the sensor being present), check the electrical insulation in relation to **+ 12 V** between the following connections:

– **3XU** between components **120** and **1288**,
– **3TG** between components **120** and **1288**.
If the connection or connections are faulty and there is a repair procedure (see **Technical Note 6015A, Electrical wiring repair, Wiring: Precautions for repair**), repair the wiring, otherwise replace it.

If the fault is still present, replace the differential pressure sensor.

AFTER REPAIR	Deal with any other faults. Clear the fault memory. Switch off the ignition until the end of the power-latch phase, and carry out a road test followed by a check with the **diagnostic tool**.

GETtheMANUALS.org

DF323 PRESENT OR STORED	DAMPER VALVE CC.0: Short circuit to earth CC.1: Short circuit to + 12 V CC: Short circuit C0: Open circuit 1.DEF: Internal electronic fault

NOTES	**Conditions for applying the fault finding procedure to a stored fault:** The fault is declared **present** after the ignition has been switched on.
	Special notes: If the fault is **present**: – the **level 1** warning light is lit (for **Vdiag 20, 58**, **24, 5C, 26, 28, 60 and 62**), – particle filter regeneration is inhibited. Use bornier **Elé. 1681** for all operations on the engine management computer connector.
	Use the **Wiring Diagram Technical Note, Laguna II ph2, Vel Satis ph2, Espace IV ph2, Mégane II ph2, Scénic II ph2**.

CC.0 **CC.1**	***NOTES***	None.

Check the condition of the damper valve connector (see **Wiring Diagram Technical Note, Laguna II ph2, Vel Satis ph2, Espace IV ph2, Mégane II ph2, Scénic II ph2, component code 1461**).
Check the condition of the engine management computer connector (see **Wiring Diagram Technical Note, Laguna II ph2, Vel Satis ph2, Espace IV ph2, Mégane II ph2, Scénic II ph2, component code 120**).
If the connector or connectors are faulty and if there is a repair procedure (see **Technical Note 6015A, Repairing electrical wiring, Wiring: Precautions for repair**), repair the connector, otherwise replace the wiring.

Measure the **resistance** between connections **3AAX** and **3AAY** of component **1461**.
If the resistance of the damper valve is less than **0.5** Ω or greater than **400** Ω, replace the damper valve.

Then run command **SC036: Reinitialise programming** and select **Damper valve** to reinitialise the valve's opening and closing stops.

AFTER REPAIR	Deal with any other faults. Clear the fault memory. Switch off the ignition until the end of the power-latch phase, and carry out a road test followed by a check with the **diagnostic tool**.

EDC16CP33_V18_DF323 / EDC16CP33_V1C_DF323 / EDC16CP33_V54_DF323 / EDC16CP33_V20_DF323 / EDC16CP33_V58_DF323 / EDC16CP33_V5C_DF323 / EDC16CP33_V24_DF323 / EDC16CP33_V04_DF323 / EDC16CP33_V08_DF323 / EDC16CP33_V44_DF323 / EDC16CP33_V4C_DF323 / EDC16CP33_V34_DF323 / EDC16CP33_V38_DF323 / EDC16CP33_V74_DF323 / EDC16CP33_V28_DF323 / EDC16CP33_V62_DF323 / EDC16CP33_V26_DF323 / EDC16CP33_V60_DF323

GETtheMANUALS.org

DF323 CONTINUED 1	

Check the **insulation** to **earth** of the following connections:
- **3AAX** between components **120** and **1461**,
- **3AAY** between the components **120** and **1461**.

Check the **insulation** from **+ 12 V** of the following connections:
- **3AAX** between components **120** and **1461**,
- **3AAY** between the components **120** and **1461**.

If the connection or connections are faulty and if there is a repair method (see **Technical Note 6015A, Electrical wiring repair, Wiring: Precautions for repair**), repair the wiring, otherwise replace the wiring.

If the fault is still present, contact the Techline.

CC	*NOTES*	None.

Check the condition of the damper valve connector (see **Wiring Diagram Technical Note, Laguna II ph2, Vel Satis ph2, Espace IV ph2, Mégane II ph2, Scénic II ph2, component code 1461**).
Check the condition of the engine management computer connector (see **Wiring Diagram Technical Note, Laguna II ph2, Vel Satis ph2, Espace IV ph2, Mégane II ph2, Scénic II ph2, component code 120**).
If the connector or connectors are faulty and if there is a repair procedure (see **Technical Note 6015A, Repairing electrical wiring, Wiring: Precautions for repair**), repair the connector, otherwise replace the wiring.

Measure the **resistance** between connections **3AAX** and **3AAY** of component **1461**.
If the resistance of the damper valve is less than **0.5** Ω or greater than **400** Ω, replace the damper valve.

Then run command **SC036 Reinitialise programming** and select **Damper valve** to reinitialise the valve's opening and closing stops.

AFTER REPAIR	Deal with any other faults. Clear the fault memory. Switch off the ignition until the end of the power-latch phase, and carry out a road test followed by a check with the **diagnostic tool**.

GETtheMANUALS.org

DF323 CONTINUED 2	

Check the **insulation** between the following connections:
- **3AAX** between components **120** and **1461**,
- **3AAY** between the components **120** and **1461**.

If the connection or connections are faulty and if there is a repair method (see **Technical Note 6015A, Electrical wiring repair, Wiring: Precautions for repair**), repair the wiring, otherwise replace the wiring.

If the fault is still present, contact the Techline.

CO	*NOTES*	None.

Check the condition of the damper valve connector (see **Wiring Diagram Technical Note, Laguna II ph2, Vel Satis ph2, Espace IV ph2, Mégane II ph2, Scénic II ph2, component code 1461**).
Check the condition of the engine management computer connector (see **Wiring Diagram Technical Note, Laguna II ph2, Vel Satis ph2, Espace IV ph2, Mégane II ph2, Scénic II ph2, component code 120**).
If the connector or connectors are faulty and if there is a repair procedure (see **Technical Note 6015A, Repairing electrical wiring, Wiring: Precautions for repair**), repair the connector, otherwise replace the wiring.

Measure the **resistance** between connections **3AAX** and **3AAY** of component **1461**.

If the resistance of the damper valve is less than **0.5** Ω or greater than **400** Ω, replace the damper valve.

Then run command **SC036: Reinitialise programming** and select **Damper valve** to reinitialise the valve's opening and closing stops.

Check the **continuity** of the following connections:
- **3AAX** between components **120** and **1461**,
- **3AAY** between the components **120** and **1461**.

If the connection or connections are faulty and if there is a repair method (see **Technical Note 6015A, Electrical wiring repair, Wiring: Precautions for repair**), repair the wiring, otherwise replace the wiring.

If the fault is still present, contact the Techline.

AFTER REPAIR	Deal with any other faults. Clear the fault memory. Switch off the ignition until the end of the power-latch phase, and carry out a road test followed by a check with the **diagnostic tool**.

GETtheMANUALS.org

DF323 CONTINUED 3	

1.DEF	***NOTES***	**Special notes:** This fault appears when the computer control section has overheated. A road test may be necessary.
		Priorities when dealing with a number of faults: Deal with **CO**, **CO.0**, **CC.1** and **CO** first if they are **present** or **stored**.

Check the condition of the damper valve connector (see **Wiring Diagram Technical Note, Laguna II ph2, Vel Satis ph2, Espace IV ph2, Mégane II ph2, Scénic II ph2, component code 1461**).
Check the condition of the engine management computer connector (see **Wiring Diagram Technical Note, Laguna II ph2, Vel Satis ph2, Espace IV ph2, Mégane II ph2, Scénic II ph2, component code 120**).
If the connector or connectors are faulty and if there is a repair procedure (see **Technical Note 6015A, Repairing electrical wiring, Wiring: Precautions for repair**), repair the connector, otherwise replace the wiring.

Check **the continuity** of the following connections:
- **3AAX** between components **120** and **1461**,
- **3AAY** between the components **120** and **1461**.

Check the **insulation** from **+ 5 V** (computer supplies) of the following connections:
- **3AAX** between components **120** and **1461**,
- **3AAY** between the components **120** and **1461**.

If the connection or connections are faulty and if there is a repair method (see **Technical Note 6015A, Electrical wiring repair, Wiring: Precautions for repair**), repair the wiring, otherwise replace the wiring.

If the fault is still present, contact the Techline.

AFTER REPAIR	Deal with any other faults. Clear the fault memory. Switch off the ignition until the end of the power-latch phase, and carry out a road test followed by a check with the **diagnostic tool**.

GETtheMANUALS.org

DF333 PRESENT OR STORED	INJECTION -> AUTOMATIC TRANSMISSION CONNECTION 1.DEF: Multiplex network

NOTES	**Special notes:** – Use bornier **Elé. 1681** for all operations on the engine management computer connectors. – **Do not clear the fault before reading the contexts of the fault.** (see **Wiring diagram Technical Note for Mégane II ph2, Scénic II ph2, Espace IV ph2**)
	Conditions for applying the fault finding procedure to a stored fault: – The fault is declared **present** if the **EOBD (European On Board Diagnostic)** warning light is lit.

Check the multiplex network.

Check the condition of the automatic transmission computer connector (see **Wiring Diagram Technical Note, Mégane II ph2, Scénic II ph2, Espace IV ph2, component code 119**).
Check the condition of the engine management computer connector (see **Wiring Diagram Technical Note, Mégane II ph2, Scénic II ph2, Espace IV ph2, component code 120**).
If the connector or connectors are faulty and if there is a repair procedure (see **Technical Note 6015A, Repairing electrical wiring, Wiring: Precautions for repair**), repair the connector, otherwise replace the wiring.

Check the **insulation** to **earth, the continuity** and **absence of interference resistance** on the following connections:
- **3MT** between components **119** and **120**,
- **3MS** between components **119** and **120.**

If the connection or connections are faulty and there is a repair procedure (see **Technical Note 6015A, Repairing electrical wiring, Wiring: Precautions for repair**), repair the wiring, otherwise replace it.

If the fault is still present, check that the automatic transmission computer is recognised by the **CLIP diagnostic tool**.
If dialogue is not established (see **MR 366, 372, 407, 23A, Automatic transmission**).

AFTER REPAIR	Deal with any other faults. Clear the fault memory. Switch off the ignition until the end of the power-latch phase, and carry out a road test followed by a check with the **diagnostic tool**.

GETtheMANUALS.org

DF364 PRESENT OR STORED	HEATING AND AIR CONDITIONING SYSTEM CC.0: Short circuit to earth CO.1: Open circuit or short circuit to +12 V

CC.0 CO.1	***NOTES***	**Special notes:** Use bornier **Elé. 1681** for all operations on the engine management computer connectors.
		Use the **Wiring Diagram Technical Note for Mégane II ph2 or Scénic II ph2**.

Check the heating and air conditioning circuit (see **MR 364 (Mégane II ph2), 370 (Scénic II ph2) Mechanical, 62A, Air conditioning**).

Check the condition of the refrigerant pressure sensor connector (see **Wiring Diagram Technical Note, Mégane II ph2 or Scénic II ph2, component code 1202**).
Check the condition of the engine management computer connector (see **Wiring Diagram Technical Note**, **Mégane II ph2 or Scénic II ph2, component code 120**).
If the connector or connectors are faulty and if there is a repair procedure (see **Technical Note 6015A, Repairing electrical wiring, Wiring: Precautions for repair**), repair the connector, otherwise replace the wiring.

Disconnect the battery and the injection computer.
Check the **insulation** and **continuity** of the following connections:
- **38Y** between components **120** and **1202**,
- **38X** between components **120** and **1202**,
- **38U** between components **120** and **1202**.

If the connection or connections are faulty and if there is a repair method (see **Technical Note 6015A, Electrical wiring repair, Wiring: Precautions for repair**), repair the wiring, otherwise replace the wiring.

AFTER REPAIR	Deal with any other faults. Clear the fault memory. Switch off the ignition until the end of the power-latch phase, and carry out a road test followed by a check with the **diagnostic tool**.

EDC16CP33_V18_DF364 / EDC16CP33_V1C_DF364 / EDC16CP33_V54_DF364 / EDC16CP33_V20_DF364 / EDC16CP33_V58_DF364 / EDC16CP33_V5C_DF364 / EDC16CP33_V24_DF364 / EDC16CP33_V04_DF364 / EDC16CP33_V08_DF364 / EDC16CP33_V44_DF364 / EDC16CP33_V4C_DF364 / EDC16CP33_V34_DF364 / EDC16CP33_V38_DF364 / EDC16CP33_V74_DF364 / EDC16CP33_V28_DF364 / EDC16CP33_V62_DF364 / EDC16CP33_V26_DF364 / EDC16CP33_V60_DF364

GETtheMANUALS.org

DF364 PRESENT OR STORED CONTINUED	

If the wiring of the particle filter downstream temperature sensor, component code **1288**, is present (with or without the sensor being present), check the electrical insulation in relation to **+ 12 V** between the following connections:

– **3XU** between components **120** and **1288**,
– **3TG** between components **120** and **1288**.

If the connection or connections are faulty and there is a repair procedure (see **Technical Note 6015A, Electrical wiring repair, Wiring: Precautions for repair**), repair the wiring, otherwise replace it.

If the fault is still present, replace the refrigerant pressure sensor.

AFTER REPAIR	Deal with any other faults. Clear the fault memory. Switch off the ignition until the end of the power-latch phase, and carry out a road test followed by a check with the **diagnostic tool**.

GETtheMANUALS.org

DF502 PRESENT OR STORED	CRUISE CONTROL OR SPEED LIMITER BUTTON 1.DEF: Cruise control/speed limiter on/off button inconsistency

NOTES	**Conditions for applying the fault finding procedure to a stored fault:** If the fault is declared **present** after: – a road test with activation of the cruise control/speed limiter function, – the engine is started.
	Special notes: If the fault is **present**: – the cruise control/speed limiter function is switched off. Use bornier **Elé.1681** for any operations on the injection computer connectors.
	Use the **Wiring Diagram Technical Note, Laguna II ph2, Vel Satis ph2, Espace IV ph2, Mégane II ph2, Scénic II ph2**.

Check the condition of the cruise control/speed limiter on/off button connector (see **Technical Note Wiring Diagram, Laguna II ph2, Vel Satis ph2, Espace IV ph2, Mégane II ph2, component code 1081** or **component code 1546** for **Scénic II ph2**).
Check the condition of the engine management computer connector (see **Wiring Diagram Technical Note, Laguna II ph2, Vel Satis ph2, Espace IV ph2, Mégane II ph2, Scénic II ph2, component code 120**).
If the connector or connectors are faulty and if there is a repair procedure (see **Technical Note 6015A, Repairing electrical wiring, Wiring: Precautions for repair**), repair the connector, otherwise replace the wiring.

With the button in the rest position, check the **insulation** between the following connections:
- **AP10** and **3FX** of component **1081** (for **Vel Satis ph2, Laguna II ph2** and **Espace IV ph2**),
- **AP10** and **3PD** of component **1081** (for **Vel Satis ph2, Laguna II ph2** and **Espace IV ph2**),
- **AP43** and **3FX** of component **1081** (for **Mégane II ph2**),
- **AP43** and **3PD** of component **1081** (for **Mégane II ph2**),
- **AP43** and **3FX** of component **1546** (for **Mégane II ph2**),
- **AP43** and **3PD** of component **1546** (for **Scénic II ph2**).

AFTER REPAIR	Deal with any other faults. Clear the fault memory. Switch off the ignition until the end of the power-latch phase, and carry out a road test followed by a check with the **diagnostic tool**.

GETtheMANUALS.org

DF502 CONTINUED	

With speed limiter selected, check the **continuity** between the following connections:
- **AP10** and **3PD** of component **1081** (for **Vel Satis ph2, Laguna II ph2** and **Espace IV ph2**),
- **AP43** and **3PD** of component **1081** (for **Mégane II ph2**),
- **AP43** and **3PD** of component **1546** (for **Scénic II ph2**).

With cruise control selected, check the **continuity** between connections:
- **AP10** and **3FX** of component **1081** (for **Vel Satis ph2, Laguna II ph2** and **Espace IV ph2**),
- **AP43** and **3FX** of component **1081** (for **Mégane II ph2**),
- **AP43** and **3FX** of component **1546** (for **Scénic II ph2**).

If the connection or connections are faulty and if there is a repair method (see **Technical Note 6015A, Electrical wiring repair, Wiring: Precautions for repair**), repair the wiring, otherwise replace the wiring.

If necessary, replace the cruise control/speed limiter on/off button.

Check the **continuity** and **absence of interference resistance** of the following connections:
- **3FX** between components **120** and **1081** (for **Vel Satis ph2, Laguna II ph2, Espace IV ph2** and **Mégane II ph2**),
- **3PD** between components **120** and **1081** (for **Vel Satis ph2, Laguna II ph2, Espace IV ph2** and **Mégane II ph2**),
- **3FX** between components **120** and **1546** (for **Scénic II ph2**),
- **3PD** between components **120** and **1546** (for **Scénic II ph2**).

If the connection or connections are faulty and if there is a repair method (see **Technical Note 6015A, Electrical wiring repair, Wiring: Precautions for repair**), repair the wiring, otherwise replace the wiring.

If the fault is still present, contact the Techline.

AFTER REPAIR	Deal with any other faults. Clear the fault memory. Switch off the ignition until the end of the power-latch phase, and carry out a road test followed by a check with the **diagnostic tool**.

GETtheMANUALS.org

DF532 PRESENT OR STORED	ALTERNATOR CHARGE SIGNAL 1.DEF: Internal electronic fault 2.DEF: Inconsistent signal

NOTES	**Priorities when dealing with a number of faults:** **– DF046 Battery voltage.**
	Conditions for applying the fault finding procedure to a stored fault: If the fault is declared **present** after: – starting the engine, – a road test.
	Special notes: Computer operating voltage: **6 V < operating voltage < 16.5 V**. Use bornier **Elé.1681** for any operations on the injection computer connectors.
	Use the **Wiring Diagram Technical Note, Laguna II ph2, Vel Satis ph2, Espace IV ph2, Mégane II ph2, Scénic II ph2**.

Check the condition of the alternator connector (see **Wiring Diagram Technical Note, Laguna II ph2, Vel Satis ph2, Espace IV ph2, Mégane II ph2, Scénic II ph2, component code 103**).
Check the condition of the engine management computer connector (see **Wiring Diagram Technical Note, Laguna II ph2, Vel Satis ph2, Espace IV ph2, Mégane II ph2, Scénic II ph2, component code 120**).
If the connector or connectors are faulty and if there is a repair procedure (see **Technical Note 6015A, Repairing electrical wiring, Wiring: Precautions for repair**), repair the connector, otherwise replace the wiring.

AFTER REPAIR	Deal with any other faults. Clear the fault memory. Switch off the ignition until the end of the power-latch phase, and carry out a road test followed by a check with the **diagnostic tool**.

GETtheMANUALS.org

DF532 CONTINUED	

Check the **continuity** and **the absence of interference resistance** on the following connection: • **2K** between components **120** and **103**. If the connection or connections are faulty and if there is a repair method (see **Technical Note 6015A, Electrical wiring repair, Wiring: Precautions for repair**), repair the wiring, otherwise replace the wiring.
Check the charging circuit; apply **Technical Note 6014A Checking the charging circuit**. Carry out the necessary repairs.
If the fault is still present, contact the Techline.

AFTER REPAIR	Deal with any other faults. Clear the fault memory. Switch off the ignition until the end of the power-latch phase, and carry out a road test followed by a check with the **diagnostic tool**.

GETtheMANUALS.org

DF569 PRESENT OR STORED	TURBOCHARGING CIRCUIT 1.DEF: Turbocharging pressure too high 2.DEF: Turbocharging pressure too low 3DEF: Inconsistency

NOTES	**Priorities when dealing with a number of faults:** **– DF054 Turbocharging solenoid valve control circuit** **– DF004 Turbocharging pressure sensor circuit.**
	Conditions for applying the fault finding procedure to a stored fault: If the fault is declared **present** after: – the ignition is switched on, – starting for **2.DEF**, – a road test, – in turbo regulation phase for **1.DEF**, – engine speed > **3000 rpm** for **1.DEF**, – system flow > **20 mg/st** for **1.DEF**.
	Special notes: Use bornier **Elé.1681** for any operations on the injection computer connectors. If the fault is **present**: – particle filter regenerations are inhibited (for **Vdiag 18, 1C, 54, 20, 58, 5C, 24** only), – engine torque limited, – turbocharging regulation is inhibited, – the EGR function is inhibited, – the **level 1** and **EOBD (European On Board Diagnostic)** warning lights are lit.
	Use the **Wiring Diagram Technical Note, Laguna II ph2, Vel Satis ph2, Espace IV ph2, Mégane II ph2, Scénic II ph2**.

AFTER REPAIR	Deal with any other faults. Clear the fault memory. Switch off the ignition until the end of the power-latch phase, and carry out a road test followed by a check with the **diagnostic tool**.

GETtheMANUALS.org

DF569 CONTINUED 1	

1.DEF **2.DEF** **3.DEF**	***NOTES***	None.

If the specification of this fault is: **2.DEF: Turbocharging pressure too low**, apply **test 6: Fuel circuit return valve check**.

Continue fault finding, regardless of whether or not the fuel return rail has been replaced.

For the other specifications, move on to the next step.

If the loss of power was not noted during slight acceleration **and** if there was a loss of engine power during **each acceleration at full load**, replace the diesel fuel injector return rail and its overpressure valve (see **MR364 (Mégane II ph2), MR370 (Scénic II ph2), MR 395 (Laguna II ph2), 402 (Vel Satis ph2), 405 (Espace IV ph2) Mechanical, 13B, Diesel fuel injector return rail: Removal - Refitting**).

Check the condition of the turbocharging pressure sensor connector (see **Wiring Diagram Technical Note, Laguna II ph2, Vel Satis ph2, Espace IV ph2, Mégane II ph2, Scénic II ph2, component code 1071**).
Check the condition of the engine management computer connector (see **Wiring Diagram Technical Note, Laguna II ph2, Vel Satis ph2, Espace IV ph2, Mégane II ph2, Scénic II ph2, component code 120**).
If the connector or connectors are faulty and if there is a repair procedure (see **Technical Note 6015A, Repairing electrical wiring, Wiring: Precautions for repair**), repair the connector, otherwise replace the wiring.

AFTER REPAIR	Deal with any other faults. Clear the fault memory. Switch off the ignition until the end of the power-latch phase, and carry out a road test followed by a check with the **diagnostic tool**.

GETtheMANUALS.org

DF569 CONTINUED 2	

Check **for continuity** and **absence of interference resistance** of the following connections:
- **3LQ** between components **120** and **1071**,
- **3LP** between components **120** and **1071**,
- **3LN** between components **120** and **1071**.

If the connection or connections are faulty and there is a repair procedure (see **Technical Note 6015A, Electrical wiring repair, Wiring: Precautions for repair**), repair the wiring, otherwise replace it.

Test the high pressure fuel circuit:
Apply scenario **SC035 High pressure fuel circuit fault finding**.
To interpret the result, apply the interpretation of command **SC035** (see **Interpretation of commands**).

With the engine stopped and ignition on, view parameters **PR035 Atmospheric pressure** and **PR041 Turbocharging pressure**.
If there is a difference of **> 100 mbar**, check that the atmospheric pressure reading is consistent (by comparison with another vehicle for example).
If atmospheric pressure is consistent, replace the turbocharging sensor.
If not, contact the Techline.

Use the **Monitool application: MT001 Turbocharging function** to check the entire air line (only for **Vdiag 04 and 44**).

Apply **Test 4 Turbocharged air inlet circuit check**.

Run **Test 7 Variable geometry turbocharger control**.

Run **Test 8 Turbocharger rotating part**.

If the fault is still present, refer to the interpretation of parameter **PR041 Turbocharging pressure**.

If the fault is still present, contact the Techline.

AFTER REPAIR	Deal with any other faults. Clear the fault memory. Switch off the ignition until the end of the power-latch phase, and carry out a road test followed by a check with the **diagnostic tool**.

GETtheMANUALS.org

DF645 PRESENT OR STORED	DAMPER VALVE POSITION REGULATION 1.DEF: Data inconsistency 2.DEF: Value outside permitted tolerance values 3.DEF: Damper valve jammed open

NOTES	**Conditions for applying the fault finding procedure to a stored fault:** The fault is declared **present** after: – with the engine running, – the battery voltage **X > 8V**.
	Priorities when dealing with a number of faults: **– DF038 Computer,** **– DF323 Damper valve,** **– DF012 Sensor supply voltage no. 2,** **– DF646 Damper valve position sensor.**
	Special notes: If the fault is **present**: – the **level 1** warning light is lit (for **Vdiag 20, 58**, **24, 5C, 26, 28, 60 and 62**), – particle filter regeneration is inhibited. Use bornier **Elé. 1681** for all operations on the engine management computer connector.
	Use the **Wiring Diagram Technical Note, Laguna II ph2, Vel Satis ph2, Espace IV ph2, Mégane II ph2, Scénic II ph2**.

Check the condition and connection of the damper valve connector (see **Wiring Diagram Technical Note, Laguna II ph2, Vel Satis ph2, Espace IV ph2, Mégane II ph2, Scénic II ph2, component code 1461**).
Check the condition and connection of the engine management computer connector (see **Wiring Diagram Technical Note, Laguna II ph2, Vel Satis ph2, Espace IV ph2, Mégane II ph2, Scénic II ph2, component code 120**).
If the connectors are faulty and if there is a repair procedure (see **Technical Note 6015A, Repairing electrical wiring, Wiring: Precautions for repair),** repair the connector, otherwise replace the wiring.

AFTER REPAIR	Deal with any other faults. Clear the fault memory. Switch off the ignition until the end of the power-latch phase, and carry out a road test followed by a check with the **diagnostic tool**.

GETtheMANUALS.org

DF645 CONTINUED	

Check the **continuity**, **insulation** from earth and **+ 12 V** and **absence of interference resistance** on the following connections:
- **3AAX** between the components **120** and **1461**,
- **3AAY** between components **120** and **1461**,
- **38KQ** between components **120** and **1461**,
- **38KS** between components **120** and **1461**,
- **38KP** between components **120** and **1461**.

If the connection or connections are faulty and there is a repair procedure (see **Technical Note 6015A, Electrical wiring repair, Wiring: Precautions for repair**), repair the wiring, otherwise replace it.

Check that the valve is not **mechanically jammed** (check that the valve is clean and that no component is preventing it from closing; clean if necessary):
With the engine switched off, disconnect the air inlet hose from the damper valve.
Check that the valve is in the open position.
Start, then switch off the engine.
Check that the valve closes when the engine is switched off and then opens again when the engine has stopped.
If this does not happen, replace the damper valve.

Then run command **SC036 Reinitialise programming** and select **Damper valve** to reinitialise the valve's opening and closing stops.

Check if the damper valve performs 3 opening/closing cycles.
Otherwise program the damper valve using command **SC036 Reinitialise programming**.

If the fault is still present, contact the Techline.

AFTER REPAIR	Deal with any other faults. Clear the fault memory. Switch off the ignition until the end of the power-latch phase, and carry out a road test followed by a check with the **diagnostic tool**.

GETtheMANUALS.org

DF646 PRESENT OR STORED	DAMPER VALVE POSITION SENSOR CC.0: Short circuit to earth CO.0: Open circuit or short circuit to earth CO.1: Open circuit or short circuit to +12 V 1.DEF: Open circuit or short circuit

NOTES	**Conditions for applying the fault finding procedure to a stored fault:** The fault is declared **present** after: – the engine is started, – a road test.
	Priorities when dealing with a number of faults: **– DF012 Sensor supply voltage no. 2.**
	Special notes: If the fault is **present**: – the **level 1** warning light is lit (for **Vdiag 20, 58**, **24, 5C, 26, 28, 60 and 62**), – particle filter regeneration is inhibited. Use bornier **Elé. 1681** for all operations on the engine management computer connector.
	Use the **Wiring Diagram Technical Note, Laguna II ph2, Vel Satis ph2, Espace IV ph2, Mégane II ph2, Scénic II ph2**.

CO.1 **1.DEF**	***NOTES***	None.

Check the condition of the damper valve connector (see **Wiring Diagram Technical Note, Laguna II ph2, Vel Satis ph2, Espace IV ph2, Mégane II ph2, Scénic II ph2, component code 1461**).
Check the condition of the engine management computer connector (see **Wiring Diagram Technical Note, Laguna II ph2, Vel Satis ph2, Espace IV ph2, Mégane II ph2, Scénic II ph2, component code 120**).
If the connector or connectors are faulty and if there is a repair procedure (see **Technical Note 6015A, Repairing electrical wiring, Wiring: Precautions for repair**), repair the connector, otherwise replace the wiring.

AFTER REPAIR	Deal with any other faults. Clear the fault memory. Switch off the ignition until the end of the power-latch phase, and carry out a road test followed by a check with the **diagnostic tool**.

GETtheMANUALS.org

DF646 CONTINUED 1	

Measure the **resistances** between connections **38KQ** and **38KP (potentiometer supply** and **potentiometer earth)** and between **38KS** and **38KP (potentiometer signal** and **potentiometer earth)** of component **1461**.
If the resistances of the damper valve are not between **290 Ω < X < 6 kΩ**, replace the damper valve.

Then run command **SC036: Reinitialise programming** and select **Damper valve** to reinitialise the valve's opening and closing stops.

Check the **insulation** from **+ 12 V** and **+ 5 V** between the following connections:
- **38KP** between components **120** and **1461**,
- **38KQ** between components **120** and **1461**,
- **38KS** between components **120** and **1461**.

If the connection or connections are faulty and if there is a repair method (see **Technical Note 6015A, Electrical wiring repair, Wiring: Precautions for repair**), repair the wiring, otherwise replace the wiring.

If the fault is still present, contact the Techline.

CC.0 **CO.0**	***NOTES***	None.

Check the condition of the damper valve connector (see **Wiring Diagram Technical Note, Laguna II ph2, Vel Satis ph2, Espace IV ph2, Mégane II ph2, Scénic II ph2, component code 1461**).
Check the condition of the engine management computer connector (see **Wiring Diagram Technical Note, Laguna II ph2, Vel Satis ph2, Espace IV ph2, Mégane II ph2, Scénic II ph2, component code 120**).
If the connector or connectors are faulty and if there is a repair procedure (see **Technical Note 6015A, Repairing electrical wiring, Wiring: Precautions for repair**), repair the connector, otherwise replace the wiring.

AFTER REPAIR	Deal with any other faults. Clear the fault memory. Switch off the ignition until the end of the power-latch phase, and carry out a road test followed by a check with the **diagnostic tool**.

GETtheMANUALS.org

DF646 CONTINUED 2	

Measure the **resistances** between connections **38KQ** and **38KP (potentiometer supply** and **potentiometer earth)** and between connections **38KS** and **38KP (potentiometer signal** and **potentiometer earth)** of component **1461**.

If the resistances of the damper valve are not between **290 Ω < X < 6 kΩ**, replace the damper valve.

Then run command **SC036: Reinitialise programming** and select **Damper valve** to reinitialise the valve's opening and closing stops.

Check the **insulation** to **earth** of the following connection:
- **38KS** between components **120** and **1461**.

Check **the continuity** of the following connections:
- **38KS** between components **120** and **1461**,
- **38KQ** between components **120** and **1461**.

If the connection or connections are faulty and if there is a repair method (see **Technical Note 6015A, Electrical wiring repair, Wiring: Precautions for repair**), repair the wiring, otherwise replace the wiring.

If the fault is still present, contact the Techline.

AFTER REPAIR	Deal with any other faults. Clear the fault memory. Switch off the ignition until the end of the power-latch phase, and carry out a road test followed by a check with the **diagnostic tool**.

GETtheMANUALS.org

DF647 PRESENT OR STORED	EGR VALVE POSITION REGULATION 1.DEF: EGR 1 offset inconsistency 2.DEF: EGR 2 offset inconsistency 3.DEF: Valve jammed closed 4.DEF: Valve jammed open

NOTES	**Conditions for applying the fault finding procedure to a stored fault:** The fault is declared **present** after: – the ignition is switched on. – the engine is started, – a road test, – if the air flowmeter temperature **> 5°C**.
	Priorities when dealing with a number of faults: **– DF209 EGR valve position sensor circuit,** **– DF046 Battery voltage,** **– DF012 Sensor supply voltage no. 2,** **– DF272 EGR valve control circuit.**
	Special notes: – the **level 1** and **EOBD (European On Board Diagnostic)** warning lights are lit for **1.DEF**, **2.DEF,** and **4.DEF** – only the **EOBD (European On Board Diagnostic)** warning light is lit for **3.DEF**, – the EGR function is inhibited by the engine management computer, – reduced performance for **2.DEF** and **3.DEF** or **1.DEF** and **2.DEF** (for **Vdiags 5C, 58 and 24**, and **20, 26, 28, 60, 62**). Use bornier **Elé. 1681** for all operations on the engine management computer connector.
	Use the **Wiring Diagram Technical Note, Laguna II ph2, Vel Satis ph2, Espace IV ph2, Mégane II ph2, Scénic II ph2**.

AFTER REPAIR	Deal with any other faults. Clear the fault memory. Switch off the ignition until the end of the power-latch phase, and carry out a road test followed by a check with the **diagnostic tool**.

GETtheMANUALS.org

DF647 CONTINUED 1	

1.DEF 2.DEF	*NOTES*	None.

Check the condition of the EGR valve (see **Wiring Diagram Technical Note, Laguna II ph2, Vel Satis ph2, Espace IV ph2, Mégane II ph2, Scénic II ph2, component code 1460 or 169**).
Check the condition of the engine management computer connector (see **Wiring Diagram Technical Note, Laguna II ph2, Vel Satis ph2, Espace IV ph2, Mégane II ph2, Scénic II ph2, component code 120**).
If the connector or connectors are faulty and if there is a repair procedure (see **Technical Note 6015A, Repairing electrical wiring, Wiring: Precautions for repair**), repair the connector, otherwise replace the wiring.

Measure the **resistance** between connections **3EL** and **3JM** of component **1460** or **169**.
If the resistance of the EGR valve is not between **1 kΩ < X < 7,5 kΩ**, replace the EGR valve.
Measure the **resistance** between connections **3EL** and **3GC** of component **1460** or **169**.
If the resistance of the EGR valve is not between **3.9 kΩ < X < 12.6 kΩ**, replace the EGR valve.
After replacement, run command **SC036 Reinitialise programming** and select **EGR valve** to reinitialise the EGR valve offsets.

Check the **continuity** and **absence of interference resistance** of the following connections:
- **3GC** between components **120** and **1460** or **169**,
- **3EL** between components **120** and **1460** or **169**,
- **3JM** between components **120** and **1460** or **169**.

If the connection or connections are faulty and if there is a repair method (see **Technical Note 6015A, Electrical wiring repair, Wiring: Precautions for repair**), repair the wiring, otherwise replace the wiring.

Remove and clean the EGR valve, then refit the EGR valve and start the engine (see **MR364 (Mégane II ph2), MR370 (Scénic II ph2), MR 395 (Laguna II ph2), 402 (Vel Satis ph2), 405 (Espace IV ph2), Mechanical, 14A, Emission control, Exhaust gas recirculation solenoid valve: Removal - Refitting**).
If the fault is still present, replace the EGR valve then run command **SC036 Reinitialise programming** and select **EGR valve** to reinitialise the EGR valve offsets.

AFTER REPAIR	Deal with any other faults. Clear the fault memory. Switch off the ignition until the end of the power-latch phase, and carry out a road test followed by a check with the **diagnostic tool**.

GETtheMANUALS.org

DF647 CONTINUED 2	

3.DEF **4.DEF**	***NOTES***	None.

Remove and clean the EGR valve, then refit it and start the engine. (see **MR364 (Mégane II ph2), MR370 (Scénic II ph2), MR 395 (Laguna II ph2), 402 (Vel Satis ph2), 405 (Espace IV ph2) Mechanical, 14A, Emission control, Exhaust gas recirculation valve: Removal - Refitting**).

If the fault is still present, replace the EGR valve then run command **SC036** and select **EGR valve** to reinitialise the EGR valve offsets.

AFTER REPAIR	Deal with any other faults. Clear the fault memory. Switch off the ignition until the end of the power-latch phase, and carry out a road test followed by a check with the **diagnostic tool**.

GETtheMANUALS.org

DF651 PRESENT OR STORED	TURBINE UPSTREAM PRESSURE SENSOR CIRCUIT CO.0: Open circuit or short circuit to earth CC.1: Short circuit to + 12 V 1.DEF: Inconsistency

NOTES	**Conditions for applying the fault finding procedure to a stored fault:** If the fault is declared **present** after: – With the ignition on, – when the engine is running.
	Special notes: If the fault is **present**: – engine torque limited, – the EGR function is inhibited by the engine management computer, – the vehicle performance is reduced, – particle filter regeneration is inhibited, – the **level 1** warning light is illuminated, – the **EOBD (European On Board Diagnostic)** warning light is lit (for **Vdiag 5C, 58, 24** and **20** (only for **M9R761, M9R722**, **M9R760** and **M9R724**)).
	Priorities when dealing with a number of faults: **DF011 Sensor supply voltage no. 1.**

CO.0	***NOTES***	None.

Check the condition of the turbine upstream pressure sensor connector (**component code 1299**).
Check the condition of the engine management computer connector (**component code 120**).
If the connector or connectors are faulty and if there is a repair procedure (see **Technical Note 6015A, Repairing electrical wiring, Wiring: Precautions for repair**), repair the connector, otherwise replace the wiring.

AFTER REPAIR	Deal with any other faults. Clear the fault memory. Switch off the ignition until the end of the power-latch phase, and carry out a road test followed by a check with the **diagnostic tool**.

GETtheMANUALS.org

DF651 CONTINUED 1	

Check the continuity and insulation from earth of the following connections:

- **3MX** between components **120** and **1299**,
- **3MY** between components **120** and **1299**,
- **3MZ** between components **120** and **1299.**

If the connection or connections are faulty and if there is a repair method (see **Technical Note 6015A, Electrical wiring repair, Wiring: Precautions for repair**), repair the wiring, otherwise replace the wiring.

If the wiring of the particle filter downstream temperature sensor, component code **1288**, is present (with or without the sensor being present), check the electrical insulation in relation to **+ 12 V** between the following connections:

– **3XU** between components **120** and **1288**,
– **3TG** between components **120** and **1288**.
If the connection or connections are faulty and there is a repair procedure (see **Technical Note 6015A, Electrical wiring repair, Wiring: Precautions for repair**), repair the wiring, otherwise replace it.

If the faults **DF569 Turbocharging circuit** and/or **DF1188 Air taken into the turbocharging circuit** are present, perform **Test 8 Turbocharger rotating part**.

If the fault is still present, replace the turbine upstream pressure sensor.

CC.1	*NOTES*	None.

Check the condition of the turbine upstream pressure sensor connector (**component code 1299**).
Check the condition of the engine management computer connector (**component code 120**).
If the connector or connectors are faulty and if there is a repair procedure (see **Technical Note 6015A, Repairing electrical wiring, Wiring: Precautions for repair**), repair the connector, otherwise replace the wiring.

AFTER REPAIR	Deal with any other faults. Clear the fault memory. Switch off the ignition until the end of the power-latch phase, and carry out a road test followed by a check with the **diagnostic tool**.

GETtheMANUALS.org

DF651 CONTINUED 2	

Check the **continuity** and **insulation** from **+ 12 V** of the following connections:

- **3MX** between components **120** and **1299**,
- **3MY** between components **120** and **1299**,
- **3MZ** between components **120** and **1299.**

If the connection or connections are faulty and if there is a repair method (see **Technical Note 6015A, Electrical wiring repair, Wiring: Precautions for repair**), repair the wiring, otherwise replace the wiring.

If the faults **DF569 Turbocharging circuit** and/or **DF1188 Air taken into the turbocharging circuit** are present, perform **Test 8 Turbocharger rotating part**.

If the fault is still present, replace the turbine upstream pressure sensor.

1.DEF	*NOTES*	None.

Check the condition of the turbine upstream pressure sensor connector (**component code 1299**).
Check the condition of the engine management computer connector (**component code 120**).
If the connector or connectors are faulty and if there is a repair procedure (see **Technical Note 6015A, Repairing electrical wiring, Wiring: Precautions for repair**), repair the connector, otherwise replace the wiring.

Check the continuity and absence of interference resistance on the following connection:

- **3MY** between components **120** and **1299.**

If the connection is faulty and there is a repair procedure (see **Technical Note 6015A, Electrical wiring repair, Wiring: Precautions for repair**), repair the wiring, otherwise replace it.

If the faults **DF569 Turbocharging circuit** and/or **DF1188 Air taken into the turbocharging circuit** are present, perform **Test 8 Turbocharger rotating part**.

Replace the turbine upstream pressure sensor if necessary.

If the fault is still present, contact the Techline.

AFTER REPAIR	Deal with any other faults. Clear the fault memory. Switch off the ignition until the end of the power-latch phase, and carry out a road test followed by a check with the **diagnostic tool**.

GETtheMANUALS.org

DF652 PRESENT OR STORED	TURBINE UPSTREAM TEMPERATURE SENSOR CIRCUIT CC.0: Short circuit to earth CO.1: Open circuit or short circuit to +12 V

NOTES	**Conditions for applying fault finding procedures to stored faults:** The fault becomes **present** if: – the ignition is on **(CC.0)** or after a road test with the engine warm **(CO.1)**.
	Special notes: If the fault is **present**: – particle filter regeneration is inhibited, – the vehicle performance is reduced, – temperature regulation upstream of the particle filter is inhibited, – the **level 1** warning light is illuminated, – the **EOBD (European On Board Diagnostic) warning light** is lit (for **Vdiag 5C, 58, 24** and **20**).

CC.0	***NOTES***	None.

Check the condition of the turbine upstream temperature sensor connector (see **Wiring Diagram Technical Note, Laguna II ph2, Vel Satis ph2, Espace IV ph2, Mégane II ph2, Scénic II ph2, component code 1589**).
Check the condition of the engine management computer connector (see **Wiring Diagram Technical Note, Laguna II ph2, Vel Satis ph2, Espace IV ph2, Mégane II ph2, Scénic II ph2, component code 120**).
If the connector or connectors are faulty and if there is a repair procedure (see **Technical Note 6015A, Repairing electrical wiring, Wiring: Precautions for repair**), repair the connector, otherwise replace the wiring.

Check the **insulation** from **earth** of the following connections:
- **3ABS** between components **120** and **1589**,
- **3ABT** between components **120** and **1589.**

If the connection or connections are faulty and if there is a repair method (see **Technical Note 6015A, Electrical wiring repair, Wiring: Precautions for repair**), repair the wiring, otherwise replace the wiring.

If fault is still present, replace the turbine upstream temperature sensor

AFTER REPAIR	Deal with any other faults. Clear the fault memory. Switch off the ignition until the end of the power-latch phase, and carry out a road test followed by a check with the **diagnostic tool**.

GETtheMANUALS.org

DF652 CONTINUED	

CO.1	***NOTES***	None.

Apply **test 6: Fuel circuit return valve check**. **Continue fault finding, regardless of whether or not the fuel return rail has been replaced.**
Check **the continuity** and **insulation** from **+ 12 V** of the following connections: • **3ABS** between components **120** and **1589**, • **3ABT** between components **120** and **1589.** If the connection or connections are faulty and if there is a repair method (see **Technical Note 6015A, Electrical wiring repair, Wiring: Precautions for repair**), repair the wiring, otherwise replace the wiring.
If fault is still present, replace the turbine upstream temperature sensor.

AFTER REPAIR	Deal with any other faults. Clear the fault memory. Switch off the ignition until the end of the power-latch phase, and carry out a road test followed by a check with the **diagnostic tool**.

GETtheMANUALS.org

DF717 PRESENT OR STORED	PARTICLE FILTER UPSTREAM PRESSURE 1.DEF: Inconsistency

NOTES	**Conditions for applying fault finding procedures to stored faults:** The fault is declared **present** after the engine is started or following a road test.
	Special notes: If the fault is **present:** – the **level 1** warning light is lit, – the **EOBD (European On Board Diagnostic)** warning light will come on after three consecutive driving cycles (starting **+ 5 seconds** + switching off the ignition and waiting for **1 minute**), – the particle filter fault finding procedure is inhibited, – particle filter regeneration is inhibited.

Check the condition of the pressure pipe between the particle filter upstream take-off point and the differential pressure sensor.

Check that the pipe is not crushed, blocked or pierced.

Check that the differential pressure sensor is correctly positioned and connected (see **MR 395, 402, 405, 364, 370, Mechanical, 19B Exhaust, Particle filter pressure sensor: Removal - Refitting**).

Replace the pressure pipe if necessary.

AFTER REPAIR	Deal with any other faults. Clear the fault memory. Switch off the ignition until the end of the power-latch phase, and carry out a road test followed by a check with the **diagnostic tool**.

GETtheMANUALS.org

DF890 PRESENT OR STORED	MOVEMENT DURING REGENERATION PRESSURE SENSOR 1.DEF: Above max threshold

NOTES	**Conditions for applying fault finding procedures to stored faults:** The fault becomes **present** during an After-Sales regeneration carried out using the **diagnostic tool** at a speed above zero.
	Special notes: If the fault is **present**, the particle filter regeneration in progress is interrupted.

IMPORTANT:
The fault is present because the vehicle was driven while the After-Sales regeneration was in progress.
The vehicle must remain stationary throughout regeneration.

DO NOT DRIVE THE VEHICLE.
CHECK THAT THE VEHICLE IS CORRECTLY IMMOBILISED.

- Switch off the ignition and wait for the **diagnostic tool** message (maximum wait **8 minutes**): **Loss of dialogue with the computer: EDC16 CP33, check the tool connection and the computer supply**,
- switch on the ignition again,
- establish dialogue with the injection computer, clear the faults from the computer memory,
- carry out another After-Sales regeneration,
- run command **SC017 Particle filter regeneration** and follow the procedure described in **Interpretation of commands**.

If the fault is still present, contact the Techline.

AFTER REPAIR	Deal with any other faults. Clear the fault memory. Switch off the ignition until the end of the power-latch phase, and carry out a road test followed by a check with the **diagnostic tool**.

GETtheMANUALS.org

DF891 PRESENT OR STORED	GROUP 1 INJECTORS FEED CC.0: Short circuit to earth 1.DEF: Faulty connections

NOTES	**Group 1 corresponds to injectors 1 and 2.**
	Conditions for applying the fault finding procedure to a stored fault: If the fault becomes **present** after: – the ignition is switched on, – the engine is started.
	Priorities when dealing with a number of faults: **– DF026 Cylinder 1 injector control circuit** **– DF027 Cylinder 2 injector control circuit.**
	Special notes: If the fault is **present**: – particle filter regeneration is inhibited, – the **level 2** warning light will be lit, – the engine stops. Use bornier **Elé.1681** for all operations on the engine management computer.
	Use the **Wiring Diagram Technical Note, Laguna II ph2, Vel Satis ph2, Espace IV ph2, Mégane II ph2, Scénic II ph2**.

Check the condition of the injector connectors (see **Wiring Diagram Technical Note, Laguna II ph2, Vel Satis ph2, Espace IV ph2, Mégane II ph2, Scénic II ph2, component codes 193, 194**).
Check the condition of the engine management computer connector (see **Wiring Diagram Technical Note, Laguna II ph2, Vel Satis ph2, Espace IV ph2, Mégane II ph2, Scénic II ph2, component code 120**).
If the connector or connectors are faulty and if there is a repair procedure (see **Technical Note 6015A, Repairing electrical wiring, Wiring: Precautions for repair**), repair the connector, otherwise replace the wiring.

AFTER REPAIR	Deal with any other faults. Clear the fault memory. Switch off the ignition until the end of the power-latch phase, and carry out a road test followed by a check with the **diagnostic tool**.

GETtheMANUALS.org

DF891 CONTINUED	

Check the **continuity** and **insulation** of the following connections:
- **3KW** between components **120** and **193**,
- **3CR** between components **120** and **193**,
- **3KX** between components **120** and **194**,
- **3CS** between components **120** and **194**,

If the connection or connections are faulty and if there is a repair method (see **Technical Note 6015A, Electrical wiring repair, Wiring: Precautions for repair**), repair the wiring, otherwise replace the wiring.

If the fault is still present, contact the Techline.

AFTER REPAIR	Deal with any other faults. Clear the fault memory. Switch off the ignition until the end of the power-latch phase, and carry out a road test followed by a check with the **diagnostic tool**.

GETtheMANUALS.org

DF892 PRESENT OR STORED	GROUP 2 INJECTORS FEED CC.0: Short circuit to earth 1.DEF: Faulty connections

NOTES	**Group 2 corresponds to injectors 3 and 4.**
	Conditions for applying the fault finding procedure to a stored fault: If the fault becomes **present** after: – the ignition is switched on, – the engine is started.
	Priorities when dealing with a number of faults: **– DF028 Cylinder 3 injector control circuit** **– DF029 Cylinder 4 injector control circuit.**
	Special notes: If the fault is **present**: – particle filter regeneration is inhibited, – the **level 2** warning light will be lit, – the engine stops. Use bornier **Elé.1681** for all operations on the engine management computer.
	Use the **Wiring Diagram Technical Note, Laguna II ph2, Vel Satis ph2, Espace IV ph2, Mégane II ph2, Scénic II ph2**.

Check the condition of the injector connectors (see **Wiring Diagram Technical Note, Laguna II ph2, Vel Satis ph2, Espace IV ph2, Mégane II ph2, Scénic II ph2, component codes 195, 196**).
Check the condition of the engine management computer connector (see **Wiring Diagram Technical Note, Laguna II ph2, Vel Satis ph2, Espace IV ph2, Mégane II ph2, Scénic II ph2, component code 120**).
If the connector or connectors are faulty and if there is a repair procedure (see **Technical Note 6015A, Repairing electrical wiring, Wiring: Precautions for repair**), repair the connector, otherwise replace the wiring.

AFTER REPAIR	Deal with any other faults. Clear the fault memory. Switch off the ignition until the end of the power-latch phase, and carry out a road test followed by a check with the **diagnostic tool**.

GETtheMANUALS.org

DF892 CONTINUED	

Check the **continuity** and **insulation** of the following connections:
- **3KY** between components **120** and **195**,
- **3CT** between components **120** and **195**,
- **3KZ** between components **120** and **196**,
- **3CU** between components **120** and **196**.

If the connection or connections are faulty and if there is a repair method (see **Technical Note 6015A, Electrical wiring repair, Wiring: Precautions for repair**), repair the wiring, otherwise replace the wiring.

If the fault is still present, contact the Techline.

AFTER REPAIR	Deal with any other faults. Clear the fault memory. Switch off the ignition until the end of the power-latch phase, and carry out a road test followed by a check with the **diagnostic tool**.

GETtheMANUALS.org

DF895 PRESENT OR STORED	PRESSURE REGULATION ON RAIL 1.DEF: Below minimum threshold 2.DEF: Above maximum threshold 3.DEF: Negative loop deviation 4.DEF: Positive loop deviation

NOTES	**Conditions for applying the fault finding procedure to a stored fault:** The fault is declared **present** after: – the ignition is switched on, – with the engine running, – road test.
	Priorities when dealing with a number of faults: **– DF898 Pressure regulator circuit on rail,** **– DF897 Pressure regulator circuit on pump,** **– DF896 Pressure regulation on pump.**
	Special notes: **DF895** depends on the pressure regulator built into the rail **(DRV)**. **DF896 Pressure regulation on pump** depends on the pressure regulator integrated in the pump **(MPROP)**. The fuel pressure regulator built into the rail **(DRV**) and the fuel pressure regulator built into the pump **(MPROP)** are never actuated at the same time. If the fault is **present**: – particle filter regeneration is inhibited, – the engine stops and the **level 2** warning light comes on: **1.DEF, 4.DEF**, – the **level 1** warning light comes on: **2.DEF, 3.DEF, 4.DEF**, – engine torque limited **2.DEF, 3.DEF, 4.DEF**, – the rail pressure is regulated by a regulator built into the pump **(MPROP): 2.DEF, 3.DEF, 4.DEF**.
	Use bornier **Elé.1681** for all operations on the engine management computer.
	Use the **Wiring Diagram Technical Note, Laguna II ph2, Vel Satis ph2, Espace IV ph2, Mégane II ph2, Scénic II ph2**.

AFTER REPAIR	Deal with any other faults. Clear the fault memory. Switch off the ignition until the end of the power-latch phase, and carry out a road test followed by a check with the **diagnostic tool**.

EDC16CP33_V18_DF895 / EDC16CP33_V1C_DF895 / EDC16CP33_V54_DF895 / EDC16CP33_V20_DF895 / EDC16CP33_V58_DF895 / EDC16CP33_V5C_DF895 / EDC16CP33_V24_DF895 / EDC16CP33_V04_DF895 / EDC16CP33_V08_DF895 / EDC16CP33_V44_DF895 / EDC16CP33_V4C_DF895 / EDC16CP33_V34_DF895 / EDC16CP33_V38_DF895 / EDC16CP33_V74_DF895 / EDC16CP33_V28_DF895 / EDC16CP33_V62_DF895 / EDC16CP33_V26_DF895 / EDC16CP33_V60_DF895

GETtheMANUALS.org

DF895 CONTINUED 1	

1.DEF **2.DEF** **3.DEF** **4.DEF**	***NOTES***	None.

Check that there are no leaks on the high pressure diesel fuel circuit. Repair if necessary.
Check the level of fuel in the tank. In the event of a fuel gauge sensor fault, deal with this fault first. Check the low pressure circuit using **Test 3 Low pressure circuit test** and check that there are no exterior air leaks in the low pressure fuel circuit.
Test the high pressure fuel circuit: Run scenario **SC035 High pressure fuel circuit fault finding** (see **Interpretation of commands**).
If the fault is still present, check the rail pressure regulator connections **(DRV)**. check the engine management computer connections.
Check the seal on the rail pressure regulator **(DRV)**: Disconnect the low-pressure return pipe from the rail pressure regulator **(DRV)**. In its place, connect a transparent pipe, with the other end leading to a container of some sort in order to collect the drained diesel fuel. Start the engine and let the engine idle. When the engine is started, no diesel should flow into the transparent pipe as the rail pressure regulator **(DRV)** is closed so that the pressure in the hydraulic system can rise. Diesel fuel should flow into the transparent pipe a few seconds after the engine is started, provided that the diesel is cold (less than **15°C**), as the regulation is provided by the rail pressure regulator (**DRV**). If the diesel is warm (above **15°C**), regulation is controlled by the pump pressure regulator (**MPROP**). No diesel should flow into the pipe.

AFTER REPAIR	Deal with any other faults. Clear the fault memory. Switch off the ignition until the end of the power-latch phase, and carry out a road test followed by a check with the **diagnostic tool**.

GETtheMANUALS.org

DF895 CONTINUED 2	

If the diesel does not behave in accordance with this description, replace the rail (removing the rail pressure regulator (**DRV**) is not permitted).

Note: the above description no longer applies if faults **DF898 Rail pressure regulator circuit**, **DF897 Pump pressure regulator circuit** and **DF896 Pump pressure regulation** are present.

Check the condition of the pressure regulator connector on the pump **(MPROP)** (see **Wiring Diagram Technical Note, Laguna II ph2, Vel Satis ph2, Espace IV ph2, Mégane II ph2, Scénic II ph2, component code 1105**).
Check the condition of the engine management computer connector (see **Wiring Diagram Technical Note, Laguna II ph2, Vel Satis ph2, Espace IV ph2, Mégane II ph2, Scénic II ph2, component code 120**).
If the connector or connectors are faulty and if there is a repair procedure (see **Technical Note 6015A, Repairing electrical wiring, Wiring: Precautions for repair**), repair the connector, otherwise replace the wiring.

Measure the **resistance** between connections **3FB** and **3HI** of component **1105.**

If the resistance of the pressure regulator connector on the pump is not between **2 Ω < X < 6 Ω** at **20°C**, contact the Techline.

If the fault is still present, contact the Techline.

AFTER REPAIR	Deal with any other faults. Clear the fault memory. Switch off the ignition until the end of the power-latch phase, and carry out a road test followed by a check with the **diagnostic tool**.

GETtheMANUALS.org

DF896 PRESENT OR STORED	PRESSURE REGULATOR ON PUMP 1.DEF: Below minimum threshold 2.DEF: Above maximum threshold 3.DEF: Negative loop deviation 4.DEF: Positive loop deviation

NOTES	**Conditions for applying the fault finding procedure to a stored fault:** The fault is declared present after: – the ignition is switched on. – engine running.
	Priorities when dealing with a number of faults: **– DF897 Pressure regulator circuit on pump** **– DF898 Pressure regulator circuit on rail**
	Special notes: If the fault is **present**: – particle filter regeneration is inhibited, – the engine stops and the **level 2** warning light comes on: **1.DEF**, – the **level 1** warning light comes on: **2.DEF, 3.DEF, 4.DEF**, – engine torque is limited: **2.DEF, 3.DEF, 4.DEF**, – the rail pressure is regulated by a regulator built into the rail **(DRV): 2.DEF, 3.DEF, 4.DEF**.

1.DEF **2.DEF** **3.DEF** **4.DEF**	***NOTES***	None.

Check that there are no leaks on the high pressure diesel fuel circuit. Repair if necessary.
Check the level of fuel in the tank. Check the low pressure circuit using **Test 3 Low pressure circuit test** and check that there are no exterior air leaks in the low pressure fuel circuit.

AFTER REPAIR	Deal with any other faults. Clear the fault memory. Switch off the ignition until the end of the power-latch phase, and carry out a road test followed by a check with the **diagnostic tool**.

GETtheMANUALS.org

DF896 CONTINUED	

Test the high pressure fuel circuit: Run scenario **SC035 High pressure fuel circuit fault finding**.
Check the condition of the pressure regulator connector on the pump **(MPROP)** (see **Wiring Diagram Technical Note, Laguna II ph2, Vel Satis ph2, Espace IV ph2, Mégane II ph2, Scénic II ph2, component code 1105**). Check the condition of the engine management computer connector (see **Wiring Diagram Technical Note, Laguna II ph2, Vel Satis ph2, Espace IV ph2, Mégane II ph2, Scénic II ph2, component code 120**). If the connector or connectors are faulty and if there is a repair procedure (see **Technical Note 6015A, Repairing electrical wiring, Wiring: Precautions for repair**), repair the connector, otherwise replace the wiring.
Check the condition of the rail pressure regulator connector **(DRV)** (see **Wiring Diagram Technical Note, Laguna II ph2, Vel Satis ph2, Espace IV ph2, Mégane II ph2, Scénic II ph2, component code 1198**). Check the condition of the engine management computer connector (see **Wiring Diagram Technical Note, Laguna II ph2, Vel Satis ph2, Espace IV ph2, Mégane II ph2, Scénic II ph2, component code 120**). If the connector or connectors are faulty and if there is a repair procedure (see **Technical Note 6015A, Repairing electrical wiring, Wiring: Precautions for repair**), repair the connector, otherwise replace the wiring.
If the fault is still present, contact the Techline.

AFTER REPAIR	Deal with any other faults. Clear the fault memory. Switch off the ignition until the end of the power-latch phase, and carry out a road test followed by a check with the **diagnostic tool**.

GETtheMANUALS.org

DF897 PRESENT OR STORED	PUMP PRESSURE REGULATOR CIRCUIT CO: Open circuit CC.0: Short circuit to earth CC.1: Short circuit to + 12 V 1.DEF: Internal electronic fault

NOTES	**Conditions for applying the fault finding procedure to a stored fault:** The fault reappears after: – the ignition is switched on, – the regulator is controlled using command **AC226 Pump pressure regulator**.
	Special notes: The **fuel flow regulator** is built into the high pressure pump. If the fault is **present**: – particle filter regeneration is inhibited, – the quantity of fuel injected is limited and the engine speed is limited to **3000 rpm**: **CO, CC.1, 1.DEF**, – regulation with open loop for fuel flow, – the **level 2** warning light comes on: **CC.0**: **engine stop**, – the **level 1** warning light comes on: **CO, CC.1, 1.DEF**, – pressure is regulated by the pump pressure regulator **(MPROP)**. Use bornier **Elé. 1681** for all operations on the engine management computer connectors.
	Use the **Wiring Diagram Technical Note, Laguna II ph2, Vel Satis ph2, Espace IV ph2, Mégane II ph2, Scénic II ph2**.

CO	***NOTES***	None.

Check the condition of the pressure regulator connector on the pump **(MPROP)** (see **Wiring Diagram Technical Note, Laguna II ph2, Vel Satis ph2, Espace IV ph2, Mégane II ph2, Scénic II ph2, component code 1105**).
Check the condition of the engine management computer connector (see **Wiring Diagram Technical Note, Laguna II ph2, Vel Satis ph2, Espace IV ph2, Mégane II ph2, Scénic II ph2, component code 120**).
If the connector or connectors are faulty and if there is a repair procedure (see **Technical Note 6015A, Repairing electrical wiring, Wiring: Precautions for repair**), repair the connector, otherwise replace the wiring.

AFTER REPAIR	Deal with any other faults. Clear the fault memory. Switch off the ignition until the end of the power-latch phase, and carry out a road test followed by a check with the **diagnostic tool**.

GETtheMANUALS.org

DF897 CONTINUED 1	

Measure the **resistance** between connections **3FB** and **3HI** of component **1105.**
If the resistance of the pressure regulator connector on the pump is less than **1.5** Ω or greater than **1 k**Ω, contact the Techline.

Check **the continuity** of the following connection:
- **3HI** between the components **120** and **1105**.

Check the **+12 V after relay supply** to the pump pressure regulator **(MPROP)** on the following connection**:**
- **3FB** of component **1105**.

If the connection or connections are faulty and if there is a repair method (see **Technical Note 6015A, Electrical wiring repair, Wiring: Precautions for repair**), repair the wiring, otherwise replace the wiring.

If the fault is still present, contact the Techline.

CC.0	*NOTES*	None.

Check the condition of the pressure regulator connector on the pump **(MPROP)** (see **Wiring Diagram Technical Note, Laguna II ph2, Vel Satis ph2, Espace IV ph2, Mégane II ph2, Scénic II ph2, component code 1105**).
Check the condition of the engine management computer connector (see **Wiring Diagram Technical Note, Laguna II ph2, Vel Satis ph2, Espace IV ph2, Mégane II ph2, Scénic II ph2, component code 120**).
If the connector or connectors are faulty and if there is a repair procedure (see **Technical Note 6015A, Repairing electrical wiring, Wiring: Precautions for repair**), repair the connector, otherwise replace the wiring.

Measure the **resistance** between connections **3FB** and **3HI** of component **1105.**
If the resistance of the pressure regulator connector on the pump is less than **1.5** Ω or greater than **1 k**Ω, contact the Techline.

Check the **continuity** and **insulation** from **earth** of the following connection:
- **3HI** between the components **120** and **1105**.

Check the **+12 V after relay supply** to the pump pressure regulator **(MPROP)** on the following connection**:**
- **3FB** of component **1105**.

If the connection or connections are faulty and if there is a repair method (see **Technical Note 6015A, Electrical wiring repair, Wiring: Precautions for repair**), repair the wiring, otherwise replace the wiring.

If the fault is still present, contact the Techline.

AFTER REPAIR	Deal with any other faults. Clear the fault memory. Switch off the ignition until the end of the power-latch phase, and carry out a road test followed by a check with the **diagnostic tool**.

GETtheMANUALS.org

DF897 CONTINUED 2	

CC.1	***NOTES***	None.

Check the condition of the pressure regulator connector on the pump **(MPROP)** (see **Wiring Diagram Technical Note, Laguna II ph2, Vel Satis ph2, Espace IV ph2, Mégane II ph2, Scénic II ph2, component code 1105**).
Check the condition of the engine management computer connector (see **Wiring Diagram Technical Note, Laguna II ph2, Vel Satis ph2, Espace IV ph2, Mégane II ph2, Scénic II ph2, component code 120**).
If the connector or connectors are faulty and if there is a repair procedure (see **Technical Note 6015A, Repairing electrical wiring, Wiring: Precautions for repair**), repair the connector, otherwise replace the wiring.

Measure the **resistance** between connections **3FB** and **3HI** of component **1105.**
If the resistance of the pressure regulator connector on the pump is less than **1.5** Ω or greater than **1 k**Ω, contact the Techline.

Check the **continuity** and **insulation** from + **12 V** of the following connection:
- **3HI** between the components **120** and **1105**.

Check the **+12 V after relay supply** to the pump pressure regulator **(MPROP)** on the following connection:
- **3FB** of component **1105**.

If the connection or connections are faulty and if there is a repair method (see **Technical Note 6015A, Electrical wiring repair, Wiring: Precautions for repair**), repair the wiring, otherwise replace the wiring.

If the fault is still present, contact the Techline.

1.DEF	***NOTES***	This fault appears when the computer control section has overheated.

Check the condition of the pressure regulator connector on the pump **(MPROP)** (see **Wiring Diagram Technical Note, Laguna II ph2, Vel Satis ph2, Espace IV ph2, Mégane II ph2, Scénic II ph2, component code 1105**).
Check the condition of the engine management computer connector (see **Wiring Diagram Technical Note, Laguna II ph2, Vel Satis ph2, Espace IV ph2, Mégane II ph2, Scénic II ph2, component code 120**).
If the connector or connectors are faulty and if there is a repair procedure (see **Technical Note 6015A, Repairing electrical wiring, Wiring: Precautions for repair**), repair the connector, otherwise replace the wiring.

AFTER REPAIR	Deal with any other faults. Clear the fault memory. Switch off the ignition until the end of the power-latch phase, and carry out a road test followed by a check with the **diagnostic tool**.

GETtheMANUALS.org

DF897 CONTINUED 3	

Measure the **resistance** between connections **3FB** and **3HI** of component **1105.**
If the resistance of the pressure regulator connector on the pump is less than **1.5** Ω or greater than **1 k**Ω, contact the Techline.

Check the **continuity** and **absence of interference resistance** on the following connection:
- **3HI** between the components **120** and **1105**.

Check the **+12 V after relay supply** to the pump pressure regulator **(MPROP)** on the following connection**:**
- **3FB** of component **1105**.

If the connection or connections are faulty and if there is a repair method (see **Technical Note 6015A, Electrical wiring repair, Wiring: Precautions for repair**), repair the wiring, otherwise replace the wiring.

If the fault is still present, contact the Techline.

AFTER REPAIR	Deal with any other faults. Clear the fault memory. Switch off the ignition until the end of the power-latch phase, and carry out a road test followed by a check with the **diagnostic tool**.

GETtheMANUALS.org

DF898 PRESENT OR STORED	PRESSURE REGULATOR CIRCUIT ON RAIL CO: Open circuit CC.0: Short circuit to earth CC.1: Short circuit to + 12 V 1.DEF: Internal electronic fault

NOTES	**Conditions for applying the fault finding procedure to a stored fault:** The fault reappears after: – the ignition is switched on, – the regulator is controlled using command **AC225 Rail pressure regulator**.
	Special notes: The rail pressure regulator **(DRV)** is built into the high pressure rail. The **DF898 Rail pressure regulator circuit** depends on the pressure regulator on the rail **(DRV)**. If the fault is **present**: – the quantity of fuel injected is limited and the engine speed is limited to **3000 rpm**: **CO, CC.1, 1.DEF**, – the **level 2** warning light will be lit, – the engine stops immediately for **CO, CC.1, 1.DEF**, – the engine stops after a few minutes for **CC.0**, – the rail pressure is regulated by the pump pressure regulator **(MPROP)**. Use bornier **Elé. 1681** for all operations on the engine management computer connectors.
	Use the **Wiring Diagram Technical Note, Laguna II ph2, Vel Satis ph2, Espace IV ph2, Mégane II ph2, Scénic II ph2**.

AFTER REPAIR	Deal with any other faults. Clear the fault memory. Switch off the ignition until the end of the power-latch phase, and carry out a road test followed by a check with the **diagnostic tool**.

EDC16CP33_V18_DF898 / EDC16CP33_V1C_DF898 / EDC16CP33_V54_DF898 / EDC16CP33_V20_DF898 / EDC16CP33_V58_DF898 / EDC16CP33_V5C_DF898 / EDC16CP33_V24_DF898 / EDC16CP33_V04_DF898 / EDC16CP33_V08_DF898 / EDC16CP33_V44_DF898 / EDC16CP33_V4C_DF898 / EDC16CP33_V34_DF898 / EDC16CP33_V38_DF898 / EDC16CP33_V74_DF898 / EDC16CP33_V28_DF898 / EDC16CP33_V62_DF898 / EDC16CP33_V26_DF898 / EDC16CP33_V60_DF898

GETtheMANUALS.org

DF898 CONTINUED 1	

CO	*NOTES*	None.

Check the condition of the rail pressure regulator connector **(DRV)** (see **Wiring Diagram Technical Note, Laguna II ph2, Vel Satis ph2, Espace IV ph2, Mégane II ph2, Scénic II ph2, component code 1198**).
Check the condition of the engine management computer connector (see **Wiring Diagram Technical Note, Laguna II ph2, Vel Satis ph2, Espace IV ph2, Mégane II ph2, Scénic II ph2, component code 120**).
If the connector or connectors are faulty and if there is a repair procedure (see **Technical Note 6015A, Repairing electrical wiring, Wiring: Precautions for repair**), repair the connector, otherwise replace the wiring.

Measure the **resistance** between connections **3FB** and **3RG** of component **1198.**
If the resistance of the rail pressure regulator connector is less than **2** Ω or greater than **1 k**Ω, contact the Techline.

Check **the continuity** of the following connection:
- **3RG** between components **120** and **1198.**

Check the **+12 V after relay supply** to the rail pressure regulator **(DRV)** on the following connection:
- **3FB** of component **1198**.

If the connection or connections are faulty and if there is a repair method (see **Technical Note 6015A, Electrical wiring repair, Wiring: Precautions for repair**), repair the wiring, otherwise replace the wiring.

If the fault is still present, contact the Techline.

AFTER REPAIR	Deal with any other faults. Clear the fault memory. Switch off the ignition until the end of the power-latch phase, and carry out a road test followed by a check with the **diagnostic tool**.

GETtheMANUALS.org

DF898 CONTINUED 2	

CC.0	*NOTES*	None.

Check the condition of the rail pressure regulator connector **(DRV)** (see **Wiring Diagram Technical Note, Laguna II ph2, Vel Satis ph2, Espace IV ph2, Mégane II ph2, Scénic II ph2, component code 1198**).
Check the condition of the engine management computer connector (see **Wiring Diagram Technical Note, Laguna II ph2, Vel Satis ph2, Espace IV ph2, Mégane II ph2, Scénic II ph2, component code 120**).
If the connector or connectors are faulty and if there is a repair procedure (see **Technical Note 6015A, Repairing electrical wiring, Wiring: Precautions for repair**), repair the connector, otherwise replace the wiring.

Measure the **resistance** between connections **3FB** and **3RG** of component **1198.**
If the resistance of the rail pressure regulator connector is less than **2** Ω or greater than **1 k**Ω, contact the Techline.

Check the **continuity** and **insulation from earth** of the following connection:
- **3RG** between the components **120** and **1198**.

Check the **+12 V after relay supply** to the rail pressure regulator **(DRV)** on the following connection:
- **3FB** of component **1198**.

If the connection or connections are faulty and if there is a repair method (see **Technical Note 6015A, Electrical wiring repair, Wiring: Precautions for repair**), repair the wiring, otherwise replace the wiring.

If the fault is still present, contact the Techline.

AFTER REPAIR	Deal with any other faults. Clear the fault memory. Switch off the ignition until the end of the power-latch phase, and carry out a road test followed by a check with the **diagnostic tool**.

GETtheMANUALS.org

DF898 CONTINUED 3	

CC.1	*NOTES*	None.

Check the condition of the rail pressure regulator connector **(DRV)** (see **Wiring Diagram Technical Note, Laguna II ph2, Vel Satis ph2, Espace IV ph2, Mégane II ph2, Scénic II ph2, component code 1198**).
Check the condition of the engine management computer connector (see **Wiring Diagram Technical Note, Laguna II ph2, Vel Satis ph2, Espace IV ph2, Mégane II ph2, Scénic II ph2, component code 120**).
If the connector or connectors are faulty and if there is a repair procedure (see **Technical Note 6015A, Repairing electrical wiring, Wiring: Precautions for repair**), repair the connector, otherwise replace the wiring.

Measure the **resistance** between connections **3FB** and **3RG** of component **1198.**
If the resistance of the rail pressure regulator connector is less than **2** Ω or greater than **1 k**Ω, contact the Techline.

Check the **continuity** and **insulation from + 12 V** of the following connection:
- **3RG** between the components **120** and **1198**.

Check the **+12 V after relay supply** to the rail pressure regulator **(DRV)** on the following connection:
- **3FB** of component **1198**.

If the connection or connections are faulty and if there is a repair method (see **Technical Note 6015A, Electrical wiring repair, Wiring: Precautions for repair**), repair the wiring, otherwise replace the wiring.

If the fault is still present, contact the Techline.

AFTER REPAIR	Deal with any other faults. Clear the fault memory. Switch off the ignition until the end of the power-latch phase, and carry out a road test followed by a check with the **diagnostic tool**.

GETtheMANUALS.org

DF898 CONTINUED 4	

1.DEF	*NOTES*	**Special notes:** This fault appears when the computer control section has overheated.

Check the condition of the rail pressure regulator connector **(DRV)** (see **Wiring Diagram Technical Note, Laguna II ph2, Vel Satis ph2, Espace IV ph2, Mégane II ph2, Scénic II ph2, component code 1198**).
Check the condition of the engine management computer connector (see **Wiring Diagram Technical Note, Laguna II ph2, Vel Satis ph2, Espace IV ph2, Mégane II ph2, Scénic II ph2, component code 120**).
If the connector or connectors are faulty and if there is a repair procedure (see **Technical Note 6015A, Repairing electrical wiring, Wiring: Precautions for repair**), repair the connector, otherwise replace the wiring.

Measure the **resistance** between connections **3FB** and **3RG** of component **1198.**
If the resistance of the rail pressure regulator connector is less than **2** Ω or greater than **1 k**Ω, contact the Techline.

Check the **continuity** and **absence of interference resistance** on the following connection:
- **3RG** between the components **120** and **1198**.

Check the **+12 V after relay supply** to the rail pressure regulator **(DRV)** on the following connection:
- **3FB** of component **1198**.

If the connection or connections are faulty and if there is a repair method (see **Technical Note 6015A, Electrical wiring repair, Wiring: Precautions for repair**), repair the wiring, otherwise replace the wiring.

If the fault is still present, contact the Techline.

AFTER REPAIR	Deal with any other faults. Clear the fault memory. Switch off the ignition until the end of the power-latch phase, and carry out a road test followed by a check with the **diagnostic tool**.

GETtheMANUALS.org

DF899 PRESENT OR STORED	REGENERATION TEMPERATURE LIMIT EXCEEDED

NOTES	**Conditions for applying the fault finding procedure to a stored fault:** The fault is declared **present** during an After-Sales regeneration, if the temperature threshold is exceeded.
	Special notes: If the fault is **present**: – regeneration in progress is stopped. **IMPORTANT: The fault appears if the temperature threshold is exceeded during the After-Sales regeneration phase.**

- Carry out particle filter replacement
- run command **SC036 Reinitialise programming** (see **Interpretation of commands**) and select **After particle filter replacement**.
- **switch off the ignition and wait** for the **diagnostic tool** message (maximum wait **8 minutes**): **Loss of dialogue with the computer: EDC16 CP33, check the tool connection and the computer supply voltage**,
- **then switch on the ignition again**,
- **clear** the **present** or **stored** faults from the computer memory (**operation to be carried out within 3 minutes of switching on the ignition**).

If the fault is still present, contact the Techline.

AFTER REPAIR	Deal with any other faults. Clear the fault memory. Switch off the ignition until the end of the power-latch phase, and carry out a road test followed by a check with the **diagnostic tool**.

GETtheMANUALS.org

DF997 PRESENT OR STORED	CONTROL UNIT -> THERMOPLUNGERS CONNECTION 1.DEF: Signal incoherent

NOTES	**Conditions for applying the fault finding procedure to a stored fault:** the fault is declared **present** after the engine starts.
	Special notes: If the fault is **present**: The engine performance is impaired during the particle filter regeneration phase.

Check the condition of the thermoplunger **1, 2, 3** relay mounting connector on the engine fuse box or additional heater interface unit (see **Wiring Diagram Technical Note**, **Laguna II ph2, Vel Satis ph2, Espace IV ph2, Mégane II ph2, Scénic II ph2, component code 1067, 1068, 1069 or 1550**).
Check the condition of the engine management computer connector (see **Wiring Diagram Technical Note**, **Laguna II ph2, Vel Satis ph2, Espace IV ph2, Mégane II ph2, Scénic II ph2, component code 120**).
Check the condition of the thermoplunger connectors (see **Wiring Diagram Technical Note**, **Laguna II ph2, Vel Satis ph2, Espace IV ph2, Mégane II ph2, Scénic II ph2, component codes 898, 1072, 1073, 1074**).
If the connector or connectors are faulty and if there is a repair procedure (see **Technical Note 6015A, Repairing electrical wiring, Wiring: Precautions for repair**), repair the connector, otherwise replace the wiring.

Check the conformity of the thermoplunger **1, 2, 3** relay (relay removed) or the additional heater interface unit:
– Check the **insulation** between the following connections:
- **BP9** and **3JB** of component **1067** or **1550**.
- **BP91** and **3JAD** or **3JD** and **3JAC** of component **1068** or **1550**.
- **BP9** and **3JAC** or **3JC** of component **1069** or **1550**.

If the connection or connections are faulty and if there is a repair method (see **Technical Note 6015A, Electrical wiring repair, Wiring: Precautions for repair**), repair the wiring, otherwise replace the wiring.

Check the **continuity** of the following connections:
- **3JAC** or **3JC** between component **1069** or **1550**,
- **3JAD** or **3JD** and **3JAC** between component **1068** or **1550**,
- **3JA** between component **1067** or **1550**.

If the connection or connections are faulty and if there is a repair method (see **Technical Note 6015A, Electrical wiring repair, Wiring: Precautions for repair**), repair the wiring, otherwise replace the wiring.

AFTER REPAIR	Deal with any other faults. Clear the fault memory. Switch off the ignition until the end of the power-latch phase, and carry out a road test followed by a check with the **diagnostic tool**.

GETtheMANUALS.org

DF997 CONTINUED	

Check **the absence of interference resistance** on the following connections:
- **3JA** between components **120** and **1067** or **1550**,
- **3JAA** between components **120** and **1068** or **1550**,
- **3JAB** between components **120** and **1069** or **1550**.

If the connection or connections are faulty and if there is a repair method (see **Technical Note 6015A, Electrical wiring repair, Wiring: Precautions for repair**), repair the wiring, otherwise replace the wiring.
Check the **+ 12 V after relay supply** to the thermoplunger **1**, thermoplunger **2**, thermoplunger **3** relay mounting of the following connections:
- **3FB** of component **1067** or **1550**,
- **BP91** of component **1068** or **1550**,
- **BP9** of component **1069** or **1550**.

If the connection or connections are faulty and if there is a repair method (see **Technical Note 6015A, Electrical wiring repair, Wiring: Precautions for repair**), repair the wiring, otherwise replace the wiring.

Actuate the various thermoplunger relays one by one using commands:
– AC063 Thermoplunger no. 1 relay
– AC064 Thermoplunger no. 2 relay
– AC031 Thermoplunger no. 3 relay
Check the voltage using a multimeter. If the voltage is zero, the thermoplunger is faulty.
Only replace the faulty thermoplunger.

AFTER REPAIR	Deal with any other faults. Clear the fault memory. Switch off the ignition until the end of the power-latch phase, and carry out a road test followed by a check with the **diagnostic tool**.

GETtheMANUALS.org

DF1020 PRESENT OR STORED	ENGINE OIL DILUTION 1.DEF: Above maximum threshold

NOTES	**Conditions for applying the fault finding procedure to a stored fault:** the fault is declared **present** after the engine starts.
	Special notes: If the fault is **present**: Particle filter regeneration inhibited, **Level 1** warning light lit, Risk of engine damage.

Drain the engine oil. Reset the oil wear counter. Clear the faults.
If the fault is still present, contact the Techline.

AFTER REPAIR	Deal with any other faults. Clear the fault memory. Switch off the ignition until the end of the power-latch phase, and carry out a road test followed by a check with the **diagnostic tool**.

EDC16CP33_V28_DF1020/EDC16CP33_V62_DF1020

GETtheMANUALS.org

DF1069 PRESENT OR STORED	HEATER PLUGS NOT CONFIGURED 1.DEF: Configuration / Initialisation

NOTES	**Special notes:** If the fault is **present**: – engine torque limited, – an engine speed below **1500 rpm**. The **level 1** warning light is illuminated.
	Conditions under which the fault appears: This fault only appears when the computer is reprogrammed after a change of Vdiag.

If the fault is **present**, display status **ET781 Heater plugs** in the sub-function **Ignition/Preheating**.
If status **ET781** is **STATUS 3**, this means that the heater plugs are not configured in the injection computer.
To find out which type of heater plugs are fitted to the engine, look at the colour of the rings on the plugs.
– Slow plugs have a black ring.
– Fast plugs have a white ring.
To configure the type of plugs, run command **SC036 Reinitialise programming** and select **HEATER PLUGS** (see **Interpretation of commands**).
If the fault is **stored**, clear the fault.
End of fault finding.

If the fault is still present or if status **ET781** is not **STATUS 3** or is inconsistent with the type of plug fitted, contact the Techline.

AFTER REPAIR	Deal with any other faults. Clear the fault memory. Switch off the ignition until the end of the power-latch phase, and carry out a road test followed by a check with the **diagnostic tool**.

GETtheMANUALS.org

DF1188 PRESENT OR STORED	AIR TAKEN INTO THE TURBOCHARGING CIRCUIT 1.DEF: Air leak in the turbocharging circuit

NOTES	**Priorities when dealing with a number of faults:** **– DF004 Turbocharging pressure sensor circuit.**
	Conditions for applying the fault finding procedure to stored faults: The fault is declared **present** with the engine running above **3000 rpm** and during the turbocharger regulation phase (for at least **10 seconds**).
	Special notes: If the fault is **present**: – the **level 1** and **OBD** warning lights are lit, – the vehicle performance is reduced, – engine torque is limited, – the turbo function is inhibited, – particle filter regeneration is inhibited, – the EGR function is inhibited by the engine management computer,

Check the condition of the turbocharging pressure sensor connector (**component code 1071**).
Check the condition of the turbocharging solenoid valve connector (**component code 1475**).
Check the condition of the engine management computer connector (**component code 120**).
If the connectors are faulty and if there is a repair procedure (see **Technical Note 6015A, Repairing electrical wiring, Wiring: Precautions for repair),** repair the connector, otherwise replace the wiring.

Check **the continuity** and **insulation** of the following connections:
- **3LQ** between components **120** and **1071**,
- **3LP** between components **120** and **1071**,
- **3LN** between components **120** and **1071**,
- **3MG** between the components **120** and **1475**.

If the connection or connections are faulty and there is a repair procedure (see **Technical Note 6015A, Electrical wiring repair, Wiring: Precautions for repair**), repair the wiring, otherwise replace it.

AFTER REPAIR	Deal with any other faults. Clear the fault memory. Switch off the ignition until the end of the power-latch phase, and carry out a road test followed by a check with the **diagnostic tool**.

GETtheMANUALS.org

DF1188 CONTINUED	

Apply **Test 4 Turbocharged air inlet circuit check**.
Apply **Test 7 Variable geometry turbocharger control**.
Apply **Test 8 Turbocharger rotating part.**
Run **Test 11 Temperature upstream of turbine too low**.
Check the take-off point of the turbine upstream pressure sensor
If the fault is still present, contact the Techline.

AFTER REPAIR	Deal with any other faults. Clear the fault memory. Switch off the ignition until the end of the power-latch phase, and carry out a road test followed by a check with the **diagnostic tool**.

GETtheMANUALS.org

The global **conformity check** for the functions and sub-functions of this system is no longer explained in the conformity check sub-section. Instead, all of the information available in the **CLIP diagnostic tool** functions and sub-functions is detailed in the following sections:
For **STATUSES**, refer to the **INTERPRETATION OF STATUSES** section.
For **PARAMETERS**, refer to the **INTERPRETATION OF PARAMETERS** section.
For **COMMANDS**, refer to the **INTERPRETATION OF COMMANDS** section.

GETtheMANUALS.org

Tool status	Diagnostic tool title
ET001	+ After ignition computer feed
ET003	Engine immobiliser
ET007	Pre-postheating control
ET024	Thermoplunger no. 1 request
ET025	Thermoplunger no. 2 request
ET026	Thermoplunger no. 3 request
ET034	Clutch signal registered
ET038	Engine
ET042	Cruise control/speed limiter
ET076	Starting
ET077	Impact detected
ET079	Air conditioning present
ET104	Injector code use
ET120	Pre-postheating signal
ET143	Low-speed fan assembly relay control
ET144	High-speed fan assembly relay control
ET205	Thermoplunger no. 1 relay control (only on **Laguna II ph2 without particle filter**)
ET206	Thermoplunger no. 2 relay control (only on **Laguna II ph2 without particle filter**)
ET207	Thermoplunger no. 3 relay control (only on **Laguna II ph2 without particle filter**)
ET238	Synchronisation
ET285	Injection -> automatic gearbox connection
ET341	Immobiliser code programmed
ET405	Clutch pedal switch (only for manual gearboxes)
ET415	Cruise control/Speed limiter deactivation
ET587	Cooling of recirculated exhaust gas
ET589	Electric coolant pump control (turbocharger)
ET615	Automatic gearbox lever position
ET651	EGR programming cut-off

GETtheMANUALS.org

Tool status	Diagnostic tool title
ET703	Cruise control/speed limiter buttons
ET704	Brakecontact No. 1
ET705	Brakecontact No. 2
ET706	Stored engine status no. 1
ET707	Stored engine status no. 2
ET708	Stored engine status no. 3
ET709	Stored engine status no. 4
ET710	Stored engine status no. 5
ET711	Stored engine status no. 6
ET712	Stored engine status no. 7
ET713	Stored engine status no. 8
ET714	Stored engine status no. 9
ET715	Stored engine status no. 10
ET742	Stored rege.* request status No.1
ET743	Stored rege.* request status No.2
ET744	Stored rege.* request status No.3
ET745	Stored rege.* request status No.4
ET746	Stored rege.* request status No.5
ET747	Stored rege.* request status No.6
ET748	Stored rege.* request status No.7
ET749	Stored rege.* request status No.8
ET750	Stored rege.* request status No.9
ET751	Stored rege.* request status No.10
ET776	Recirculated exhaust gas cool.* setpoint
ET781	Heater plugs

*rege.: regeneration
*cool.: cooling

GETtheMANUALS.org

ET001	COMPUTER + AFTER IGNITION FEED

STATUS DEFINITION	**PRESENT:** This status indicates that the **+ after ignition feed** is active. **ABSENT:** This status indicates that the **+ after ignition feed** is not active.

NOTES	**Special notes:** Only perform these tests if the parameters do not correspond with the system operation programming. Use the **Wiring Diagram Technical Note**, **Laguna II ph2, Vel Satis ph2, Mégane II ph2, Scénic II ph2, Espace IV ph2.**

Conformity check: Engine stopped and ignition on, or engine running, and engine coolant temperature > 80°C

"PRESENT"	Ignition on and engine running warm at idle speed with the **+ after ignition feed** activated. Normal operating condition. The computer is correctly supplied after the ignition has been switched on. In the event of a fault, refer to the interpretation of **DF046 Battery voltage** or **DF151 Main relay circuit**.

Sensor electrical conformity.

"ABSENT"	***NOTES***	Ignition on

AFTER REPAIR	Carry out a road test, then check with the **diagnostic tool**.

EDC16CP33_V18_ET001 / EDC16CP33_V1C_ET001 / EDC16CP33_V54_ET001 / EDC16CP33_V20_ET001 / EDC16CP33_V58_ET001 / EDC16CP33_V5C_ET001 / EDC16CP33_V24_ET001 / EDC16CP33_V04_ET001 / EDC16CP33_V08_ET001 / EDC16CP33_V44_ET001 / EDC16CP33_V4C_ET001 / EDC16CP33_V34_ET001 / EDC16CP33_V38_ET001 / EDC16CP33_V74_ET001 / EDC16CP33_V28_ET001 / EDC16CP33_V62_ET001 / EDC16CP33_V26_ET001 / EDC16CP33_V60_ET001

GETtheMANUALS.org

ET001 CONTINUED	

If the ignition is not switched on, status **ET001** should be **ABSENT**.
As soon as the ignition is switched on, the computer should be supplied with power. Status **ET001** becomes **PRESENT**.
If this status remains locked on **ABSENT**, follow the procedure below:
– Check the condition of fuse **FM3 (30A)** in the engine fuse and relay box (see **MR 395 (Laguna II ph2), 405 (Espace IV ph2) Mechanical, 81C, Fuses, Fuses: List and location of components**).
– Check the condition of fuse **F18 (15A)** in the Protection and Switching Unit (UPC) (see **MR364 (Mégane II ph2), MR370 (Scénic II ph2) Mechanical, 81C, Fuses, Fuses: List and location of components**).
Check **the continuity** and **absence of interference resistance** on the following connection:

• **3AA** between components **120** and **983 or 1337**.

If the connection is faulty and there is a repair procedure (see **Technical Note 6015A, Electrical wiring repair, Wiring: Precautions for repair**), repair the wiring, otherwise replace it.
Check the condition of the engine management computer connector (see **Wiring Diagram Technical Note, Laguna II ph2, Vel Satis ph2, Espace IV ph2, Mégane II ph2, Scénic II ph2, component code 120**).
If the connector is faulty and there is a repair method (see **Technical Note 6015A, Repairing electrical wiring, Wiring: Precautions for repair**), repair the connector, otherwise replace the wiring.

If the fault is still present, contact the Techline.

AFTER REPAIR	Carry out a road test, then check with the **diagnostic tool**.

GETtheMANUALS.org

ET003	ENGINE IMMOBILISER

STATUS DEFINITION	**ACTIVE:** This status indicates that the immobiliser is active. **INACTIVE:** This status indicates that the immobiliser is inactive.

NOTES	**Special notes:** Only perform these tests if the parameters do not correspond with the system operation programming.

Conformity check with engine stopped and ignition on, or engine running, and engine coolant temperature > 80°C

ACTIVE	Refer to the fault finding note for the UCH (see **87B, Passenger compartment connection unit**).

INACTIVE	Refer to the fault finding note for the UCH (see **87B, Passenger compartment connection unit**).

AFTER REPAIR	Carry out a road test, then check with the **diagnostic tool**.

EDC16CP33_V18_ET003 / EDC16CP33_V1C_ET003 / EDC16CP33_V54_ET003 / EDC16CP33_V20_ET003 / EDC16CP33_V58_ET003 / EDC16CP33_V5C_ET003 / EDC16CP33_V24_ET003 / EDC16CP33_V04_ET003 / EDC16CP33_V08_ET003 / EDC16CP33_V44_ET003 / EDC16CP33_V4C_ET003 / EDC16CP33_V34_ET003 / EDC16CP33_V38_ET003 / EDC16CP33_V74_ET003 / EDC16CP33_V28_ET003 / EDC16CP33_V62_ET003 / EDC16CP33_V26_ET003 / EDC16CP33_V60_ET003

GETtheMANUALS.org

ET007	PRE-POSTHEATING UNIT CONTROL

STATUS DEFINITION	**ACTIVE:** when the heater plugs are activated according to the engine coolant temperature. **INACTIVE:** after the engine has been running for a certain period In the event of a fault, consult the interpretation of fault **DF017 Preheating unit control circuit**.

NOTES	**Special notes:** **This status is specific to slow heater plugs (black ring).**

Conformity check with engine stopped and ignition on.

"ACTIVE"

When the ignition is switched on, status **ET007** should be **ACTIVE** for a time that varies according to the engine coolant temperature. Both the relay and the heater plugs are supplied.
After starting, the status should remain **ACTIVE** for a time that varies according to the engine temperature. This is the postheating phase.

If **ET007** is **INACTIVE** when the ignition is switched on, check:
– Supply fuse **FM12 (70A)** of component **597** (engine fuse and relay box) or **F2 (70A)** of component **777** for **Mégane II and Scénic II**
– The **supply** to the heater plugs after relay actuation, and the connections of the heater plugs.

Important: on this engine, the plug supply voltage is variable.
– Check the **continuity** and **absence of interference resistance** of the following connections:
• **37AB** between components **257** and **683**,
• **37AA** between components **257** and **680**,
• **37Z** between components **257** and **681**,
• **37AC** between components **257** and **682**.
If the connection or connections are faulty and there is a repair procedure (see **Technical Note 6015A, Electrical wiring repair, Wiring: Precautions for repair**), repair the wiring, otherwise replace it.

AFTER REPAIR	Carry out a road test, then check with the **diagnostic tool**.

EDC16CP33_V18_ET007 / EDC16CP33_V1C_ET007 / EDC16CP33_V54_ET007 / EDC16CP33_V20_ET007 / EDC16CP33_V58_ET007 / EDC16CP33_V5C_ET007 / EDC16CP33_V24_ET007 / EDC16CP33_V04_ET007 / EDC16CP33_V08_ET007 / EDC16CP33_V44_ET007 / EDC16CP33_V4C_ET007 / EDC16CP33_V34_ET007 / EDC16CP33_V38_ET007 / EDC16CP33_V74_ET007 / EDC16CP33_V28_ET007 / EDC16CP33_V26_ET007

GETtheMANUALS.org

ET007 CONTINUED	

"ACTIVE"	– Check the connection and condition of the preheating unit (see **Wiring Diagram Technical Note, Laguna II ph2, Vel Satis ph2, Espace IV ph2, Mégane II ph2, Scénic II ph2, component code 257**). If the connector or connectors are faulty and there is a repair procedure (see **Technical Note 6015A, Electrical wiring repair, Wiring: Precautions for repair**), repair the connector, otherwise replace the wiring. If the vehicle starts, postheating has ended and status **ET007** remains **ACTIVE** during the engine operating phase, refer to the interpretation of faults **DF017 Preheating unit control circuit** and **DF025 Preheating unit diagnostic connection**.
"INACTIVE"	If the vehicle does not start, the status remains **INACTIVE** and preheating does not start when the ignition is switched on or during the starting phase. Check the **continuity** and **absence of interference resistance** on the following connections: • **3FY** and **3FF** between components **120** and **257**. Check the **+ 12 V battery supply** to the preheating unit on the following connection: • **BP35** of component **257**. If the connection or connections are faulty and there is a repair procedure (see **Technical Note 6015A, Electrical wiring repair, Wiring: Precautions for repair**), repair the wiring, otherwise replace it.

Conformity check with the engine running and engine coolant temperature > 80°C

"ACTIVE" then "INACTIVE"	After the engine has been running for a certain period, the status changes from **ACTIVE to INACTIVE**. In the event of a fault, consult the interpretation of fault **DF017 Preheating unit control circuit**.

AFTER REPAIR	Carry out a road test, then check with the **diagnostic tool**.

GETtheMANUALS.org

ET024 **ET025** **ET026**	THERMOPLUNGER NO. 1 REQUEST THERMOPLUNGER NO. 2 REQUEST THERMOPLUNGER NO. 3 REQUEST

STATUS DEFINITION	**ACTIVE:** These statuses indicate that the thermoplungers are active. **INACTIVE:** These statuses indicate that the thermoplungers are inactive.

Conformity check with engine stopped and ignition on, or engine running, and engine coolant temperature > 80°C

"INACTIVE"	Statuses **ET024, ET025, and ET026** are **INACTIVE** when the ignition is switched on with the engine stopped, or when the engine is warm.

"ACTIVE"	Statuses **ET024, ET025, and ET026** are **ACTIVE** when: – the engine has been started, – and the engine coolant temperature is low (**< 15°C**), – and the air temperature is low (**< 5°C**). This strategy allows the engine coolant to be heated and to allow the heating of the passenger compartment. To control the operation of the thermoplunger relays, run the following commands: **– AC063 Thermoplunger no. 1 relay,** **– AC064 Thermoplunger no. 2 relay,** **– AC031 Thermoplunger no. 3 relay.** In the event of a fault, refer to the interpretation of faults: **– DF032 Thermoplunger no. 1 relay control circuit,** **– DF033 Thermoplunger no. 2 relay control circuit,** **– DF034 Thermoplunger no. 3 relay control circuit.**

AFTER REPAIR	Carry out a road test, then check with the **diagnostic tool**.

EDC16CP33_V18_ET024 / EDC16CP33_V18_ET025 / EDC16CP33_V18_ET026 / EDC16CP33_V1C_ET024 / EDC16CP33_V1C_ET025 / EDC16CP33_V1C_ET026 / EDC16CP33_V54_ET024 / EDC16CP33_V54_ET025 / EDC16CP33_V54_ET026 / EDC16CP33_V20_ET024 / EDC16CP33_V20_ET025 / EDC16CP33_V20_ET026 / EDC16CP33_V58_ET024 / EDC16CP33_V58_ET025 / EDC16CP33_V58_ET026 / EDC16CP33_V5C_ET024 / EDC16CP33_V5C_ET025 / EDC16CP33_V5C_ET026 / EDC16CP33_V24_ET024 / EDC16CP33_V24_ET025 / EDC16CP33_V24_ET026 / EDC16CP33_V28_ET024 / EDC16CP33_V28_ET025 / EDC16CP33_V28_ET026 / EDC16CP33_V62_ET024 / EDC16CP33_V62_ET025 / EDC16CP33_V62_ET026 / EDC16CP33_V26_ET024 / EDC16CP33_V60_ET024 / EDC16CP33_V26_ET025 / EDC16CP33_V60_ET025 / EDC16CP33_V26_ET026 / EDC16CP33_V60_ET026

GETtheMANUALS.org

ET034	CLUTCH SIGNAL DETECTED

STATUS DEFINITION	**NO:** This status indicates that the clutch pedal has not been depressed since the ignition was switched on. **YES:** This status indicates that the clutch pedal has been depressed since the ignition was switched on.

NOTES	**Special notes:** Only perform these tests if the parameters do not correspond with the system operation programming.

Conformity check with engine stopped and ignition on, or engine running, and engine coolant temperature > 80°C

NO	When the vehicle ignition is switched on without depressing the clutch pedal, status **ET034** is **NO**.

AFTER REPAIR	Carry out a road test, then check with the **diagnostic tool**.

EDC16CP33_V18_ET034 / EDC16CP33_V1C_ET034 / EDC16CP33_V54_ET034 / EDC16CP33_V20_ET034 / EDC16CP33_V58_ET034 / EDC16CP33_V5C_ET034 / EDC16CP33_V24_ET034 / EDC16CP33_V04_ET034 / EDC16CP33_V08_ET034 / EDC16CP33_V44_ET034 / EDC16CP33_V4C_ET034 / EDC16CP33_V34_ET034 / EDC16CP33_V38_ET034 / EDC16CP33_V74_ET034 / EDC16CP33_V28_ET034 / EDC16CP33_V62_ET034 / EDC16CP33_V26_ET001 / EDC16CP33_V60_ET001

GETtheMANUALS.org

ET034 CONTINUED	

YES	When the driver depresses the clutch pedal, status **ET034** becomes **YES** until the ignition is next switched off. If **NO** appears despite the clutch pedal being depressed, carry out the following operations: – Remove the clutch pedal switch, check the **insulation** between connections **M** and **86D** of component **675**, with the switch in the rest position. – Repeat this operation with the switch engaged and check the **continuity** between the two connections. If these 2 checks are faulty, replace the switch. Check the condition of the clutch switch connector (see **Wiring Diagram Technical Note, Laguna II ph2, Vel Satis ph2, Espace IV ph2, Mégane II ph2, Scénic II ph2, component code 675**). Check the condition of the engine management computer connector (see **Wiring Diagram Technical Note, Laguna II ph2, Vel Satis ph2, Espace IV ph2, Mégane II ph2, Scénic II ph2, component code 120**). If the connector or connectors are faulty and if there is a repair procedure (see **Technical Note 6015A, Repairing electrical wiring, Wiring: Precautions for repair**), repair the connector, otherwise replace the wiring. Then check the **continuity** and **absence of interference resistance** of the connection: • **86D** between components **120** and **675**. – Check for complete **earthing** on connection **M** of component **675**. If the connection or connections are faulty and there is a repair procedure (see **Technical Note 6015A, Electrical wiring repair, Wiring: Precautions for repair**), repair the wiring, otherwise replace it.

AFTER REPAIR	Carry out a road test, then check with the **diagnostic tool**.

GETtheMANUALS.org

ET038	ENGINE

STATUS DEFINITION	**+ AFTER IGNITION:** This status indicates that the engine is in **+ after ignition feed**. **RUNNING:** This status indicates that the engine is running. **STOPPED:** This status indicates that the engine is stopped.

Conformity check with engine stopped and ignition on.

+ APC	This status indicates that the engine is in **+ after ignition feed**. In the event of a fault, switch off the ignition, wait for the message to appear on the **diagnostic tool** (maximum time **8 minutes**): **Loss of dialogue with the computer: EDC16 CP33, check the connection of the tool and the computer supply**. If the fault is still present, contact the Techline.

Conformity check with the engine running and engine coolant temperature > 80°C

"RUNNING"	This status indicates that the engine is running. In the event of a fault, switch off the ignition, wait for the message to appear on the **diagnostic tool** (maximum time **8 minutes**): **Loss of dialogue with the computer: EDC16 CP33, check the connection of the tool and the computer supply**, If the fault is still present, contact the Techline.
"STOPPED"	This status indicates that the engine has just cut out, without the ignition being switched off.

AFTER REPAIR	Carry out a road test, then check with the **diagnostic tool**.

EDC16CP33_V18_ET038 / EDC16CP33_V1C_ET038 / EDC16CP33_V54_ET038 / EDC16CP33_V20_ET038 / EDC16CP33_V58_ET038 / EDC16CP33_V5C_ET038 / EDC16CP33_V24_ET038 / EDC16CP33_V04_ET038 / EDC16CP33_V08_ET038 / EDC16CP33_V44_ET038 / EDC16CP33_V4C_ET038 / EDC16CP33_V34_ET038 / EDC16CP33_V38_ET038 / EDC16CP33_V74_ET038 / EDC16CP33_V28_ET038 / EDC16CP33_V62_ET038 / EDC16CP33_V26_ET038 / EDC16CP33_V60_ET038

GETtheMANUALS.org

ET042	CRUISE CONTROL/SPEED LIMITER

STATUS DEFINITION	**NOT DETECTED:** This status indicates that the cruise control or speed limiter function is not present on the vehicle. **INACTIVE:** This status indicates that the main on/off switch of the cruise control/speed limiter is in the rest (or neutral) position. **LIMITER:** This status indicates that the driver has used the main switch to select the speed limiter. **CRUISE CONTROL:** This status indicates that the driver has used the main switch to select the cruise control.

NOTES	**Special notes:** Only perform these tests if the parameters do not correspond with the system operation programming.

Conformity check with engine stopped and ignition on, or engine running, and engine coolant temperature > 80°C

NOT DETECTED	The cruise control or speed limiter function is not present on the vehicle.
INACTIVE	No button has been pressed.
LIMITER	The speed limiter **ON/OFF** button has been pressed. Lights the orange warning light on the instrument panel.
CRUISE CONTROL	The cruise control **ON/OFF** button has been pressed. Lights the green warning light on the instrument panel.

AFTER REPAIR	Carry out a road test, then check with the **diagnostic tool**.

EDC16CP33_V18_ET042 / EDC16CP33_V1C_ET042 / EDC16CP33_V54_ET042 / EDC16CP33_V20_ET042 / EDC16CP33_V58_ET042 / EDC16CP33_V5C_ET042 / EDC16CP33_V24_ET042 / EDC16CP33_V04_ET042 / EDC16CP33_V08_ET042 / EDC16CP33_V44_ET042 / EDC16CP33_V4C_ET042 / EDC16CP33_V34_ET042 / EDC16CP33_V38_ET042 / EDC16CP33_V74_ET042 / EDC16CP33_V28_ET042 / EDC16CP33_V62_ET042 / EDC16CP33_V26_ET042 / EDC16CP33_V60_ET042

GETtheMANUALS.org

ET042 CONTINUED 1	

Conformity check with engine stopped and ignition on, or engine running, and engine coolant temperature > 80°C

NOT DETECTED	If the vehicle is not fitted with cruise control/speed limiter function buttons, status **ET042 Cruise control/speed limiter** is permanently **NOT DETECTED**. Confirmation of the absence of the cruise control or speed limiter function on the vehicle. If the vehicle is fitted with cruise control or speed limiter function buttons and the main switch is in the rest (or neutral) position and after the injection computer has been programmed or reprogrammed, then status **ET042** is **NOT DETECTED**. To activate the cruise control or speed limiter function, press the main switch in the cruise control position and then in the speed limiter position. Return to rest position The tool displays status **ET042: INACTIVE**. If not, several steps must be checked: 1. Return to the multiplex network test page on the Clip application. Repeat the multiplex network test. Re-establish dialogue with the injection computer. Check **ET042**. If **ET042** is **INACTIVE**, the injection computer has detected the various positions of the main switch. The cruise control/speed limiter is active. 2. If **ET042** is still **NOT DETECTED**, check that the owner of the vehicle has not had the cruise control/speed limiter function deactivated in the past. Contact the Techline.

AFTER REPAIR	Carry out a road test, then check with the **diagnostic tool**.

GETtheMANUALS.org

ET042 CONTINUED 2	

"INACTIVE"	When the main button is in rest position (or Neutral), status **ET042 Cruise control/ speed limiter** is **INACTIVE**. If **CRUISE CONTROL** or **SPEED LIMITER** appears despite the main switch being in the rest (or neutral) position, carry out the following operations: Check the connections of the cruise control/speed limiter main switch. Check for **+12 V after ignition** on the switch connector on the following connections: • **AP10** of component **1081** (for **Vel Satis ph 2, Laguna II ph2** and **Espace IV ph2**), • **AP43** of component **1081** (for **Mégane II ph2**), • **AP43** of component **1546** (for **Scénic II ph2**). Disconnect the main switch, and when it is in the rest position, check the **insulation** between the following connections: • **AP10** and **3FX** of component **1081** (for **Vel Satis ph2, Laguna II ph2** and **Espace IV ph2**), • **AP10** and **3PD** of component **1081** (for **Vel Satis ph2, Laguna II ph2** and **Espace IV ph2**), • **AP43** and **3FX** of component **1081** (for **Mégane II ph2**), • **AP43** and **3PD** of component **1081** (for **Mégane II ph2**), • **AP43** and **3FX** of component **1546** (for **Scénic II ph2**), • **AP43** and **3PD** of component **1546** (for **Scénic II ph2**). With speed limiter selected, check the **continuity** between the following connections: • **AP10** and **3PD** of component **1081** (for **Vel Satis ph2, Laguna II ph2** and **Espace IV ph2**), • **AP43** and **3PD** of component **1081** (for **Mégane II ph2**), • **AP43** and **3PD** of component **1546** (for **Scénic II ph2**). With cruise control selected, check the **continuity** between the following connections: • **AP10** and **3FX** of component **1081** (for **Vel Satis ph2, Laguna II ph2** and **Espace IV ph2**), • **AP43** and **3FX** of component **1081** (for **Mégane II ph2**), • **AP43** and **3FX** of component **1546** (for **Scénic II ph2**).

AFTER REPAIR	Carry out a road test, then check with the **diagnostic tool**.

GETtheMANUALS.org

ET042 CONTINUED 3	

"INACTIVE"	If the connection or connections are faulty and there is a repair procedure (see **Technical Note 6015A, Electrical wiring repair, Wiring: Precautions for repair**), repair the wiring, otherwise replace it. Check the **continuity**, **insulation** and the **absence of interference resistance** of the following connections: • **3FX** and **3PD** between components **1081** and **120** (for **Vel Satis ph2, Laguna II ph2, Espace IV ph2** and **Mégane II ph2**), • **3FX** and **3PD** between components **1546** and **120** (for **Scénic II ph2**). If the connection or connections are faulty and there is a repair procedure (see **Technical Note 6015A, Electrical wiring repair, Wiring: Precautions for repair**), repair the wiring, otherwise replace it. Also check: The engine management computer connections. If the connection or connections are faulty and there is a repair procedure (see **Technical Note 6015A, Electrical wiring repair, Wiring: Precautions for repair**), repair the wiring, otherwise replace it.

AFTER REPAIR	Carry out a road test, then check with the **diagnostic tool**.

GETtheMANUALS.org

ET042 CONTINUED 4	

LIMITER	When the driver presses the main switch to the speed limiter position, status **ET042 Cruise control / speed limiter** becomes **SPEED LIMITER**. If **CRUISE CONTROL or INACTIVE** appears although the switch was pressed in the speed limiter position, carry out the following operations: Check the connections of the cruise control/speed limiter main switch. Check for **+12 V after ignition** on the switch connector on the following connections: • **AP10** of component **1081** (for **Vel Satis ph2, Laguna II ph2** and **Espace IV ph2**), • **AP43** of component **1081** (for **Mégane II ph2**), • **AP43** of component **1546** (for **Scénic II ph2**). Disconnect the main switch, and when it is in the rest position, check the **insulation** between the following connections: • **AP10** and **3FX** of component **1081** (for **Vel Satis ph2, Laguna II ph2** and **Espace IV ph2**), • **AP10** and **3PD** of component **1081** (for **Vel Satis ph2, Laguna II ph2** and **Espace IV ph2**), • **AP43** and **3FX** of component **1081** (for **Mégane II ph2**), • **AP43** and **3PD** of component **1081** (for **Mégane II ph2**), • **AP43** and **3FX** of component **1546** (for **Scénic II ph2**), • **AP43** and **3PD** of component **1546** (for **Scénic II ph2**). With speed limiter selected, check the **continuity** between the following connections: • **AP10** and **3PD** of component **1081** (for **Vel Satis ph2, Laguna II ph2** and **Espace IV ph2**), • **AP43** and **3PD** of component **1081** (for **Mégane II ph2**), • **AP43** and **3PD** of component **1546** (for **Scénic II ph2**). With cruise control selected, check the **continuity** between the following connections: • **AP10** and **3FX** of component **1081** (for **Vel Satis ph2, Laguna II ph2** and **Espace IV ph2**), • **AP43** and **3FX** of component **1081** (for **Mégane II ph2**), • **.AP43** and **3FX** of component **1546** (for **Scénic II ph2**). If the connection or connections are faulty and there is a repair procedure (see **Technical Note 6015A, Electrical wiring repair, Wiring: Precautions for repair**), repair the wiring, otherwise replace it.

AFTER REPAIR	Carry out a road test, then check with the **diagnostic tool**.

GETtheMANUALS.org

ET042 CONTINUED 5	

LIMITER	Check the **continuity**, **insulation** and the **absence of interference resistance** of the following connections: • **3FX** and **3PD** between components **1081** and **120** (for **Vel Satis ph2, Laguna II ph2, Espace IV ph2** and **Mégane II ph2**) • **3FX** and **3PD** between components **1546** and **120** (for **Scénic II ph2**). If the connection or connections are faulty and there is a repair procedure (see **Technical Note 6015A, Electrical wiring repair, Wiring: Precautions for repair**), repair the wiring, otherwise replace it. Also check: The engine management computer connections. If the connection or connections are faulty and there is a repair procedure (see **Technical Note 6015A, Electrical wiring repair, Wiring: Precautions for repair**), repair the wiring, otherwise replace it.

AFTER REPAIR	Carry out a road test, then check with the **diagnostic tool**.

GETtheMANUALS.org

ET042 CONTINUED 6	

CRUISE CONTROL	When the driver presses the cruise control switch, status **ET042 Cruise control/ speed limiter** becomes **CRUISE CONTROL**. If **SPEED LIMITER** or **INACTIVE** appears although the driver pressed the switch in the cruise control position, carry out the following operations: Check the connections of the cruise control/speed limiter main switch. Check for **+12 V after ignition** on the switch connector on the following connections: • **AP10** of component **1081** (for **Vel Satis ph2, Laguna II ph2** and **Espace IV ph2**). • **AP43** of component **1081** (for **Mégane II ph2**). • **AP43** of component **1546** (for **Scénic II ph2**). Disconnect the main switch, and when it is in the rest position, check the **insulation** between the following connections: • **AP10** and **3FX** of component **1081** (for **Vel Satis ph2, Laguna II ph2** and **Espace IV ph2**), • **AP10** and **3PD** of component **1081** (for **Vel Satis ph2, Laguna II ph2** and **Espace IV ph2**), • **AP43** and **3FX** of component **1081** (for **Mégane II ph2**), • **AP43** and **3PD** of component **1081** (for **Mégane II ph2**), • **AP43** and **3FX** of component **1546** (for **Scénic II ph2**), • **AP43** and **3PD** of component **1546** (for **Scénic II ph2**). With speed limiter selected, check the **continuity** between the following connections: • **AP10** and **3PD** of component **1081** (for **Vel Satis ph2, Laguna II ph2** and **Espace IV ph2**), • **AP43** and **3PD** of component **1081** (for **Mégane II ph2**), • **AP43** and **3PD** of component **1546** (for **Scénic II ph2**). With cruise control selected, check the **continuity** between the following connections: • **AP10** and **3FX** of component **1081** (for **Vel Satis ph2, Laguna II ph2** and **Espace IV ph2**), • **AP43** and **3FX** of component **1081** (for **Mégane II ph2**), • **.AP43** and **3FX** of component **1546** (for **Scénic II ph2**).

AFTER REPAIR	Carry out a road test, then check with the **diagnostic tool**.

GETtheMANUALS.org

ET042 CONTINUED 7	

CRUISE CONTROL	If the connection or connections are faulty and there is a repair procedure (see **Technical Note 6015A, Electrical wiring repair, Wiring: Precautions for repair**), repair the wiring, otherwise replace it. Check the **continuity**, **insulation** and the **absence of interference resistance** of the following connections: • **3FX** and **3PD** between components **1081** and **120** (for **Vel Satis ph2, Laguna II ph2, Espace IV ph2** and **Mégane II ph2**), • **3FX** and **3PD** between components **1546** and **120** (for **Scénic II ph2**). If the connection or connections are faulty and there is a repair procedure (see **Technical Note 6015A, Electrical wiring repair, Wiring: Precautions for repair**), repair the wiring, otherwise replace it. Also check: The engine management computer connections. If the connection or connections are faulty and there is a repair procedure (see **Technical Note 6015A, Electrical wiring repair, Wiring: Precautions for repair**), repair the wiring, otherwise replace it.

AFTER REPAIR	Carry out a road test, then check with the **diagnostic tool**.

GETtheMANUALS.org

ET076	STARTING

STATUS DEFINITION	**PROHIBITED:** This status indicates that starting is not possible. **AUTHORISED:** This status indicates that starting is possible.

NOTES	**Special notes:** Only perform these tests if the parameters do not correspond with the system operation programming.

Conformity check with engine stopped and ignition on, or engine running, and engine coolant temperature > 80°C

"PROHIBITED"	Refer to the fault finding note for the UCH (see **87B, Passenger compartment connection unit**).

"AUTHORISED"	Refer to the fault finding note for the UCH (see **87B, Passenger compartment connection unit**).

AFTER REPAIR	Carry out a road test, then check with the **diagnostic tool**.

EDC16CP33_V18_ET076 / EDC16CP33_V1C_ET076 / EDC16CP33_V54_ET076 / EDC16CP33_V20_ET076 / EDC16CP33_V58_ET076 / EDC16CP33_V5C_ET076 / EDC16CP33_V24_ET076 / EDC16CP33_V04_ET076 / EDC16CP33_V08_ET076 / EDC16CP33_V44_ET076 / EDC16CP33_V4C_ET076 / EDC16CP33_V34_ET076 / EDC16CP33_V38_ET076 / EDC16CP33_V74_ET076 / EDC16CP33_V28_ET076 / EDC16CP33_V62_ET076 / EDC16CP33_V26_ET076 / EDC16CP33_V60_ET076

GETtheMANUALS.org

ET077	IMPACT DETECTED

STATUS DEFINITION	**NO:** This status indicates that the airbag computer has not detected an impact. **YES:** This status indicates that the airbag computer has detected an impact.

NOTES	**Special notes:** Only perform these tests if the parameters do not correspond with the system operation programming.
	This signal is transmitted by the airbag computer via the multiplex network.

Conformity check with engine stopped and ignition on, or engine running, and engine coolant temperature > 80°C

"NO"	The status is usually **NO** as no impact has been detected. Otherwise, check the airbag computer (see **88C, Airbags and pretensioners**).
"YES"	If **YES** an impact must be present. Otherwise, check the airbag computer (see **88C, Airbags and pretensioners**). After the repair, **clear the faults** (even if no fault is displayed).

AFTER REPAIR	Carry out a road test, then check with the **diagnostic tool**.

EDC16CP33_V18_ET077 / EDC16CP33_V1C_ET077 / EDC16CP33_V54_ET077 / EDC16CP33_V20_ET077 / EDC16CP33_V58_ET077 / EDC16CP33_V5C_ET077 / EDC16CP33_V24_ET077 / EDC16CP33_V04_ET077 / EDC16CP33_V08_ET077 / EDC16CP33_V44_ET077 / EDC16CP33_V4C_ET077 / EDC16CP33_V34_ET077 / EDC16CP33_V38_ET077 / EDC16CP33_V74_ET077 / EDC16CP33_V28_ET077 / EDC16CP33_V62_ET077 / EDC16CP33_V26_ET077 / EDC16CP33_V60_ET077

GETtheMANUALS.org

ET079	AIR CONDITIONING PRESENT

STATUS DEFINITION	**YES:** This status indicates that air conditioning is present on the vehicle. **NO:** This status indicates that air conditioning is not present on the vehicle.

NOTES	**Special notes:** Only perform these tests if the parameters do not correspond with the system operation programming.
	The heating and air conditioning system is present depending on the vehicle's equipment level.

Conformity check with engine stopped and ignition on, or engine running, and engine coolant temperature > 80°C

YES or NO	**YES** or **NO**, depending on the vehicle equipment.

AFTER REPAIR	Carry out a road test, then check with the **diagnostic tool**.

EDC16CP33_V18_ET079 / EDC16CP33_V1C_ET079 / EDC16CP33_V54_ET079 / EDC16CP33_V20_ET079 / EDC16CP33_V58_ET079 / EDC16CP33_V5C_ET079 / EDC16CP33_V24_ET079 / EDC16CP33_V04_ET079 / EDC16CP33_V08_ET079 / EDC16CP33_V44_ET079 / EDC16CP33_V4C_ET079 / EDC16CP33_V34_ET079 / EDC16CP33_V38_ET079 / EDC16CP33_V74_ET079 / EDC16CP33_V28_ET079 / EDC16CP33_V62_ET079 / EDC16CP33_V26_ET079 / EDC16CP33_V60_ET079

GETtheMANUALS.org

ET104	INJECTOR CODE USE

STATUS DEFINITION	**NO:** This status indicates that the injector codes have not been entered. **YES:** This status indicates that the injector codes have been entered. **FAULTY:** This status indicates that there has been an injector code entry fault.

NOTES	**Special notes:** Only perform these tests if the parameters do not correspond with the system operation programming.

Conformity check with engine stopped and ignition on, or engine running, and engine coolant temperature > 80°C

"NO"	If status **ET104** is **NO**, program the injector codes using: either command **SC002 Enter injector codes** (the **IMA*** codes must be read from left to right), or command **SC001 Write saved data** when **replacing with a blank computer** or **after reprogramming** (see **Interpretation of commands**).
"YES"	When injector code programming is complete, status **ET104** becomes **YES**.
"FAULTY"	If status **ET104** is **FAULTY**, program the injector codes using: – either command **SC002** (the **IMA*** codes must be read from left to right), – or command **SC001** when **replacing with a blank computer** or **after reprogramming** (see **Interpretation of commands**).

IMA*: Individual injector correction

AFTER REPAIR	Carry out a road test, then check with the **diagnostic tool**.

EDC16CP33_V18_ET104 / EDC16CP33_V1C_ET104 / EDC16CP33_V54_ET104 / EDC16CP33_V20_ET104 / EDC16CP33_V58_ET104 / EDC16CP33_V5C_ET104 / EDC16CP33_V24_ET104 / EDC16CP33_V04_ET104 / EDC16CP33_V08_ET104 / EDC16CP33_V44_ET104 / EDC16CP33_V4C_ET104 / EDC16CP33_V34_ET104 / EDC16CP33_V38_ET104 / EDC16CP33_V74_ET104 / EDC16CP33_V28_ET104 / EDC16CP33_V62_ET104 / EDC16CP33_V26_ET104 / EDC16CP33_V60_ET104

GETtheMANUALS.org

ET120	PRE-POSTHEATING SIGNAL

STATUS DEFINITION	**PRESENT:** This status indicates that the pre-postheating signal is still active. **ABSENT:** This status indicates that the pre-postheating signal is not active.

NOTES	Test the battery and run fault finding on the charging circuit (see **Technical Note 6014A, Checking the charging circuit**).

Conformity check with engine stopped and ignition on, or engine running, and engine coolant temperature > 80°C

"PRESENT"	Status **ET120** is **PRESENT** when preheating is activated. Refer to the interpretation of fault **DF025 Preheating unit diagnostic line**, if status **ET120** remains **ABSENT**.
"ABSENT"	Status **ET120** is **ABSENT** when the pre-postheating is not activated. Consult the interpretation of faults **DF025 Preheating unit diagnostic line** and **DF017 Preheating unit control circuit** if status **ET120** is **PRESENT** instead of **ABSENT**.

AFTER REPAIR	Carry out a road test, then check with the **diagnostic tool**.

EDC16CP33_V18_ET120 / EDC16CP33_V1C_ET120 / EDC16CP33_V54_ET120 / EDC16CP33_V20_ET120 / EDC16CP33_V58_ET120 / EDC16CP33_V5C_ET120 / EDC16CP33_V24_ET120 / EDC16CP33_V04_ET120 / EDC16CP33_V08_ET120 / EDC16CP33_V44_ET120 / EDC16CP33_V4C_ET120 / EDC16CP33_V34_ET120 / EDC16CP33_V38_ET120 / EDC16CP33_V74_ET120 / EDC16CP33_V28_ET120 / EDC16CP33_V62_ET120 / EDC16CP33_V26_ET120 / EDC16CP33_V60_ET120

GETtheMANUALS.org

ET143	LOW-SPEED FAN ASSEMBLY RELAY CONTROL

STATUS DEFINITION	This status indicates whether the low speed fan assembly is active.

NOTES	**Special notes:** Only perform these tests if the parameters do not correspond with the system operation programming.
	If the vehicle is fitted with air conditioning, the fan assembly electrical circuit includes **2 relays**. The 1st speed fan assembly relay will be actuated when the engine coolant temperature exceeds **99°C** and its function is to cool the engine so that the engine temperature does not exceed **102°C**. If the engine coolant temperature exceeds **102°C**, the 2nd speed fan assembly relay will be actuated and the fan will rotate faster.
	Use the **Wiring Diagram Technical Note, Laguna II ph2, Vel Satis ph2, Espace IV ph2, Mégane II ph2, Scénic II ph2**.

IMPORTANT:
If the vehicle is equipped with air conditioning, the engine cooling fan will operate at 1st speed as soon as the air conditioning compressor is activated.

Conformity check with engine stopped and ignition on.

"INACTIVE"	Engine cold and air conditioning switched off In the event of a fault, consult the interpretation of fault **DF018 Low speed fan assembly control circuit**.

AFTER REPAIR	Carry out a road test, then check with the **diagnostic tool**.

EDC16CP33_V18_ET143 / EDC16CP33_V1C_ET143 / EDC16CP33_V54_ET143 / EDC16CP33_V20_ET143 / EDC16CP33_V58_ET143 / EDC16CP33_V5C_ET143 / EDC16CP33_V24_ET143 / EDC16CP33_V04_ET143 / EDC16CP33_V08_ET143 / EDC16CP33_V44_ET143 / EDC16CP33_V4C_ET143 / EDC16CP33_V34_ET143 / EDC16CP33_V38_ET143 / EDC16CP33_V74_ET143 / EDC16CP33_V28_ET143 / EDC16CP33_V26_ET143

GETtheMANUALS.org

ET143 CONTINUED 1	

Conformity check with the engine running and engine coolant temperature > 80°C

INACTIVE or **ACTIVE**, depending on the engine temperature (air conditioning switched off).
In the event of a fault, refer to the interpretation of fault **DF018**.

Sensor electrical conformity

"ACTIVE"	When the coolant reaches **99°C**, the injection computer actuates the low-speed fan assembly relay, and status **ET143** becomes **ACTIVE**. The relay then supplies the fan assembly and the cooling fan begins to turn. If status **ET143** is **ACTIVE**, but the cooling fan is not running, perform the following operations: Check the condition of fuse **FM15 (60 A)** in the engine fuse and relay box (see **MR364 (Mégane II ph2), MR370 (Scénic II ph2), MR 395 (Laguna II ph2), 402 (Vel Satis ph2), 405 (Espace IV ph2) Mechanical, 81C, Fuses, Fuses: List and location of components**). Disconnect the low speed and high speed relays, check that they are operating correctly and check the condition of the relay mounting connectors (see **Wiring Diagram Technical Note**, **Laguna II ph2, Vel Satis ph2, Espace IV ph2, Mégane II ph2, Scénic II ph2, component code 597**). If one of the connectors is faulty and there is a repair procedure (**see Technical Note 6015A, Electrical wiring repair, wiring: precautions for repair**), repair the connector, otherwise replace the wiring. Check the **+ 12 V after relay supply** to the low speed fan assembly relay on the following connection: • **3FB** of component **700**. Check the **continuity** and **absence of interference resistance** of the following connections: • **49L** between components **700** and **321**, • **49B** between components **262** and **321**, • **3JN** between components **700** and **120**.

AFTER REPAIR	Carry out a road test, then check with the **diagnostic tool**.

GETtheMANUALS.org

ET143 CONTINUED 2	
"ACTIVE"	Check that the **earth** is in order on connection **MAS** of component **262**. If the connection or connections are faulty and there is a repair procedure (see **Technical Note 6015A, Electrical wiring repair, Wiring: Precautions for repair**), repair the wiring, otherwise replace it.
"INACTIVE"	If the engine temperature is lower than **99°C**, the engine cooling fan cannot switch on and the low speed fan relay of the cannot be run. Status **ET143** should therefore be **INACTIVE** when the control relay and the engine cooling fan are not supplied.

AFTER REPAIR	Carry out a road test, then check with the **diagnostic tool**.

GETtheMANUALS.org

ET144	HIGH-SPEED FAN ASSEMBLY RELAY CONTROL

STATUS DEFINITION	This status indicates whether the high speed fan assembly is active.

NOTES	**Special notes:** Only perform these tests if the parameters do not correspond with the system operation programming.
	If the vehicle is not fitted with air conditioning, low-speed fan assembly relay does not exist. The circuit therefor only contains a single command relay to supply the engine cooling fan. The engine cooling fan will thus have only one operating speed.
	Use the **Wiring Diagram Technical Note, Laguna II ph2, Vel Satis ph2, Espace IV ph2, Mégane II ph2, Scénic II ph2**.

Conformity check with engine stopped and ignition on.

"INACTIVE"	Engine cold and air conditioning switched off In the event of a fault, consult the interpretation of fault **DF019 High speed fan assembly control circuit**.

Conformity check with the engine running and engine coolant temperature > 80°C

INACTIVE or **ACTIVE**, depending on the engine temperature (air conditioning switched off).
In the event of a fault, refer to the interpretation of fault **DF019**.

AFTER REPAIR	Carry out a road test, then check with the **diagnostic tool**.

EDC16CP33_V18_ET144 / EDC16CP33_V1C_ET144 / EDC16CP33_V54_ET144 / EDC16CP33_V20_ET144 / EDC16CP33_V58_ET144 / EDC16CP33_V5C_ET144 / EDC16CP33_V24_ET144 / EDC16CP33_V04_ET144 / EDC16CP33_V08_ET144 / EDC16CP33_V44_ET144 / EDC16CP33_V4C_ET144 / EDC16CP33_V34_ET144 / EDC16CP33_V38_ET144 / EDC16CP33_V74_ET144 / EDC16CP33_V28_ET144 / EDC16CP33_V26_ET144

GETtheMANUALS.org

ET144 CONTINUED 1	

Sensor electrical conformity

"ACTIVE"

When the coolant reaches **102°C**, the injection computer actuates the fan assembly relay and status **ET144** becomes **ACTIVE**. The relay then supplies the cooling fan.

If status **ET144** is **ACTIVE**, but the cooling fan is not running, perform the following operations:

Check the condition of fuse **FM15 (60 A)** in the engine fuse and relay box (see **MR364 (Mégane II ph2), MR370 (Scénic II ph2), MR 395 (Laguna II ph2), 402 (Vel Satis ph2), 405 (Espace IV ph2) Mechanical, 81C, Fuses, Fuses: List and location of components**).

Disconnect the low speed and high speed relays, check that they are operating correctly and check the condition of the relay mounting connectors (see **Wiring Diagram Technical Note**, **Laguna II ph2, Vel Satis ph2, Espace IV ph2, Mégane II ph2, Scénic II ph2, component code 597**).
If one of the connectors is faulty and there is a repair procedure (**see Technical Note 6015A, Electrical wiring repair, wiring: precautions for repair**), repair the connector, otherwise replace the wiring.

Check the **+ 12 V after relay supply** to the high-speed fan assembly relay on the following connection:
- **3FB** of component **234**.

Check the **continuity** and **absence of interference resistance** of the following connections:
- **3JP** between components **234** and **120**,
- **49B** between components **234** and **262**.

Check that the **earth** is in order on connection **MAS** of component **262**.

If the connection or connections are faulty and there is a repair procedure (see **Technical Note 6015A, Electrical wiring repair, Wiring: Precautions for repair**), repair the wiring, otherwise replace it.

AFTER REPAIR	Carry out a road test, then check with the **diagnostic tool**.

GETtheMANUALS.org

ET144 CONTINUED 2	
"INACTIVE"	When the injection computer no longer requests cooling, status **ET144** changes to **INACTIVE**. The fan assembly should then switch off.

AFTER REPAIR	Carry out a road test, then check with the **diagnostic tool**.

GETtheMANUALS.org

Only for Laguna II ph2 without a particle filter

ET205 **ET206** **ET207**	THERMOPLUNGER 1 RELAY CONTROL THERMOPLUNGER 2 RELAY CONTROL THERMOPLUNGER 3 RELAY CONTROL

STATUS DEFINITION	**ACTIVE:** This status indicates that the thermoplunger is supplied. **INACTIVE:** This status indicates that the thermoplunger is not supplied.

NOTES	None.

"INACTIVE"	Statuses **ET205, ET206, ET207** are **INACTIVE** when the ignition is switched on and the engine stopped, or when the engine is warm.

"ACTIVE"	Statuses **ET205**, **ET206** and **ET207** are **ACTIVE** when the engine is started, the engine coolant temperature is low (< **15°C**) and the air temperature is low (< **5°**). This program allows the engine coolant to be heated to enable the passenger compartment to be heated. The thermoplungers also act both to load the engine to improve regeneration of the particle filter. To control the operation of the thermoplunger relays, run the following commands: **– AC063 Thermoplunger no.1 relay,** **– AC064 Thermoplunger no. 2 relay,** **– AC031 Thermoplunger no.3 relay.** In the event of a fault, refer to the interpretation of faults: **– DF034 "Thermoplunger 3 relay control circuit",** **– DF033 "Heating element 2 relay control circuit",** **– DF032 Thermoplunger 1 relay control circuit.**

AFTER REPAIR	Carry out a road test, then check with the **diagnostic tool**.

EDC16CP33_V04_ET205 / EDC16CP33_V04_ET206 / EDC16CP33_V04_ET207 / EDC16CP33_V08_ET205 / EDC16CP33_V08_ET206 / EDC16CP33_V08_ET207 / EDC16CP33_V44_ET205 / EDC16CP33_V44_ET206 / EDC16CP33_V44_ET207 / EDC16CP33_V4C_ET205 / EDC16CP33_V4C_ET206 / EDC16CP33_V4C_ET207 / EDC16CP33_V34_ET205 / EDC16CP33_V34_ET206 / EDC16CP33_V34_ET207 / EDC16CP33_V38_ET205 / EDC16CP33_V38_ET206 / EDC16CP33_V38_ET207 / EDC16CP33_V74_ET205 / EDC16CP33_V74_ET206 / EDC16CP33_V74_ET207

GETtheMANUALS.org

ET238	SYNCHRONISATION

STATUS DEFINITION	Synchronisation is carried out during the engine starting phase. The camshaft position sensor and the TDC sensor are synchronised. Once this synchronisation has been carried out, it enables the computer to identify cylinder n°1 and to ascertain the precise position of the cylinder's top dead centre. Synchronisation also allows the computer to determine the injection strategy.

NOTES	**Special notes:** Only perform these tests if the parameters do not correspond with the system operation programming.

Conformity check with engine stopped and ignition on, or engine running, and engine coolant temperature > 80°C

COMPLETED	Status **ET238** is **DONE** when the engine is started. The computer has identified cylinder no. 1 and has identified the exact top dead centre position. Injection phasing and engine management are now possible, and the engine should be working properly.
NOT COMPLETED	Status **ET238** is **NOT COMPLETED** when the engine has been stopped with the + after ignition feed on. If status **ET238** remains **NOT COMPLETED** after an attempted start, consult the interpretation of fault **DF195 Camshaft sensor/engine speed consistency**.

AFTER REPAIR	Carry out a road test, then check with the **diagnostic tool**.

EDC16CP33_V18_ET238 / EDC16CP33_V1C_ET238 / EDC16CP33_V54_ET238 / EDC16CP33_V20_ET238 / EDC16CP33_V58_ET238 / EDC16CP33_V5C_ET238 / EDC16CP33_V24_ET238 / EDC16CP33_V04_ET238 / EDC16CP33_V08_ET238 / EDC16CP33_V44_ET238 / EDC16CP33_V4C_ET238 / EDC16CP33_V34_ET238 / EDC16CP33_V38_ET238 / EDC16CP33_V74_ET238 / EDC16CP33_V28_ET238 / EDC16CP33_V62_ET238 / EDC16CP33_V26_ET238 / EDC16CP33_V60_ET238

GETtheMANUALS.org

ET285	INJECTION -> AUTOMATIC TRANSMISSION CONNECTION

STATUS DEFINITION	**PRESENT** **ABSENT**

NOTES	**Special notes:** Only perform these tests if the statuses do not correspond with the system programming functions.

Conformity check with engine stopped and ignition on, or engine running, and engine coolant temperature > 80°C

PRESENT	There is a multiplex connection between the injection computer and the automatic transmission computer.

ABSENT	There is no multiplex connection between the injection computer and the automatic transmission computer, as there is a manual gearbox.
	If there is an automatic transmission and the message **ABSENT** appears:
	Run a multiplex network test (see **88B, Multiplex**).
	Check the **continuity** and **insulation to earth** of the following connections: • **3MS** and **3MT** between components **119** and **120**. If the connection or connections are faulty and there is a repair procedure (see **Technical Note 6015A, Electrical wiring repair, Wiring: Precautions for repair**), repair the wiring, otherwise replace it.

AFTER REPAIR	Carry out a road test, then check with the **diagnostic tool**.

EDC16CP33_V18_ET285 / EDC16CP33_V1C_ET285 / EDC16CP33_V54_ET285 / EDC16CP33_V20_ET285 / EDC16CP33_V58_ET285 / EDC16CP33_V5C_ET285 / EDC16CP33_V24_ET285 / EDC16CP33_V28_ET285 / EDC16CP33_V62_ET285 / EDC16CP33_V26_ET285 / EDC16CP33_V60_ET285

GETtheMANUALS.org

ET341	IMMOBILISER CODE PROGRAMMED

STATUS DEFINITION	**YES:** This status indicates that the immobiliser code has been programmed. **NO:** This status indicates that the immobiliser code has not been programmed.

NOTES	**Special notes:** Only perform these tests if the parameters do not correspond with the system operation programming.

Conformity check with engine stopped and ignition on, or engine running, and engine coolant temperature > 80°C

"YES"	Status **ET341** is **YES** if dialogue is possible between the UCH computer and the injection computer and the key code is recognised. The engine is only authorised to start if the code is correctly recognised by the UCH computer and status**ET003 Engine immobiliser** is **INACTIVE**. In the event of a fault, (see **87B, Passenger compartment connection unit, Conformity check**).
"NO"	Status **ET341** is **NO** if dialogue is not possible between the UCH computer and the injection computer (status **ET003** remains **ACTIVE**). This fault may be caused by incorrect key programming or a lack of key programming. In this case, refer to the UCH fault-finding note (see **87B**, **Passenger compartment connection unit**) and follow the key programming procedure. If the key programming is not the cause, run a multiplex network test (see **88B, Multiplexing**) and check that dialogue between the UCH and the injection computer is possible. If dialogue is not established, contact Techline.

AFTER REPAIR	Carry out a road test, then check with the **diagnostic tool**.

EDC16CP33_V18_ET341 / EDC16CP33_V1C_ET341 / EDC16CP33_V54_ET341 / EDC16CP33_V20_ET341 / EDC16CP33_V58_ET341 / EDC16CP33_V5C_ET341 / EDC16CP33_V24_ET341 / EDC16CP33_V04_ET341 / EDC16CP33_V08_ET341 / EDC16CP33_V44_ET341 / EDC16CP33_V4C_ET341 / EDC16CP33_V34_ET341 / EDC16CP33_V38_ET341 / EDC16CP33_V74_ET341 / EDC16CP33_V28_ET341 / EDC16CP33_V62_ET341 / EDC16CP33_V26_ET341 / EDC16CP33_V60_ET341

GETtheMANUALS.org

ET405	CLUTCH PEDAL SWITCH

STATUS DEFINITION	**ACTIVE:** this status indicates that the clutch pedal is depressed. **INACTIVE:** this status indicates that the clutch pedal is released.

NOTES	Can only be displayed for manual gearboxes.

Conformity check with engine stopped and ignition on, or engine running, and engine coolant temperature > 80°C

"ACTIVE"	**Clutch pedal depressed.** Non-conformity of the brake signals and/or the clutch switch signals can cause the engine to race during gear changes. In the event of a fault, check the electrical conformity of the sensor.
"INACTIVE"	**Clutch pedal released.** Non-conformity of the brake signals and/or the clutch switch signals can cause the engine to race during gear changes. In the event of a fault, check the electrical conformity of the sensor.

Sensor electrical conformity

AFTER REPAIR	Carry out a road test, then check with the **diagnostic tool**.

EDC16CP33_V18_ET405 / EDC16CP33_V1C_ET405 / EDC16CP33_V54_ET405 / EDC16CP33_V20_ET405 / EDC16CP33_V58_ET405 / EDC16CP33_V5C_ET405 / EDC16CP33_V24_ET405 / EDC16CP33_V04_ET405 / EDC16CP33_V08_ET405 / EDC16CP33_V44_ET405 / EDC16CP33_V4C_ET405 / EDC16CP33_V34_ET405 / EDC16CP33_V38_ET405 / EDC16CP33_V74_ET405 / EDC16CP33_V28_ET405 / EDC16CP33_V62_ET405 / EDC16CP33_V26_ET405 / EDC16CP33_V60_ET405

GETtheMANUALS.org

ET405 CONTINUED	

"INACTIVE"	Check the condition and fitting of the clutch pedal switch. Remove the clutch pedal switch, check the **insulation** between connections **M** and **86D** of **component 675**, with the switch in the rest position. If the connection or connections are faulty and there is a repair procedure (see **Technical Note 6015A, Electrical wiring repair, Wiring: Precautions for repair**), repair the wiring, otherwise replace it. Repeat this operation with the switch pressed, and check the **continuity** between the two connections. If these 2 checks are faulty, replace the switch. Then check the **continuity** and **absence of interference resistance** of the following connection: • **86D** between components **120** and **675**. Check that the **earth** is in order on connection **M** of component **675**. If the connection or connections are faulty and there is a repair procedure (see **Technical Note 6015A, Electrical wiring repair, Wiring: Precautions for repair**), repair the wiring, otherwise replace it.
"ACTIVE"	Check the condition and fitting of the clutch pedal switch. Remove the clutch pedal switch, check the **insulation** between connections **M** and **86D** of **component 675**, with the switch in the rest position. – Repeat this operation with the switch pressed, and check the **continuity** between the two connections. If the connection or connections are faulty and there is a repair procedure (see **Technical Note 6015A, Electrical wiring repair, Wiring: Precautions for repair**), repair the wiring, otherwise replace it. If these 2 checks are faulty, replace the switch.

AFTER REPAIR	Carry out a road test, then check with the **diagnostic tool**.

GETtheMANUALS.org

ET415	CRUISE CONTROL/SPEED LIMITER DEACTIVATION

STATUS DEFINITION	This status varies according to engine specifications.

NOTES	None.

Note:
Cruise control can be activated when the vehicle speed exceeds **18 mph (30 km/h)**.
Status **ET415** shows various reasons for deactivation of the cruise control / speed limiter function, due to a driver request or the external environment (e.g. **STATUS 1**).

IMPORTANT:
Clear the fault memory by running command **RZ001 "Fault memory" to reset this status to "NONE"**.

Conformity check with engine stopped and ignition on, or engine running, and engine coolant temperature > 80°C

STATUS 1:	Traction control request.
STATUS 2:	Brake pedal depressed.
STATUS 3:	Clutch pedal depressed.
STATUS 4:	Suspend button pressed.
STATUS 5:	Cruise control or speed limiter monitoring.
STATUS 6:	Gear lever in neutral (manual gearbox) or neutral position (automatic gearbox).

AFTER REPAIR	Carry out a road test, then check with the **diagnostic tool**.

EDC16CP33_V18_ET415 / EDC16CP33_V1C_ET415 / EDC16CP33_V54_ET415 / EDC16CP33_V20_ET415 / EDC16CP33_V58_ET415 / EDC16CP33_V5C_ET415 / EDC16CP33_V24_ET415 / EDC16CP33_V04_ET415 / EDC16CP33_V08_ET415 / EDC16CP33_V44_ET415 / EDC16CP33_V4C_ET415 / EDC16CP33_V34_ET415 / EDC16CP33_V38_ET415 / EDC16CP33_V74_ET415 / EDC16CP33_V28_ET415 / EDC16CP33_V62_ET415 / EDC16CP33_V26_ET415 / EDC16CP33_V60_ET415

GETtheMANUALS.org

ET415 CONTINUED 1	

STATUS 7:	Inconsistency between the request and the vehicle speed.
STATUS 8:	Automatic transmission in defect mode.
STATUS 9:	Vehicle speed monitoring.
STATUS 10:	Monitoring by injection computer.

Sensor electrical conformity

WITHOUT	This status is present on the **diagnostic tool** if: the computer has been reinitialised, The computer has been reprogrammed.

STATUS 1	**Traction control request**

If the vehicle is fitted with a traction control system, the cruise control function is deactivated every time the ABS computer calls for traction control.

Status **ET415** becomes **STATUS 1** when driving with the cruise control active (**ET042 Cruise control / speed limiter: CRUISE CONTROL**) and traction control is requested.
This deactivates cruise control.

Reinitialise status ET415 on the injection computer by running command RZ001 Fault memory.

If status **ET415** becomes **STATUS 1** with no traction control request (see **38C, Anti-lock braking system**).

AFTER REPAIR	Carry out a road test, then check with the **diagnostic tool**.

GETtheMANUALS.org

ET415 CONTINUED 2	

STATUS 2	**Brake pedal depressed**
	The cruise control function is deactivated when the brake pedal is depressed. Status **ET415** becomes **STATUS 2**, when driving with the cruise control active (**ET042: CRUISE CONTROL**) and brake pedal depressed. This deactivates cruise control. **Reinitialise status ET415 on the injection computer by running command RZ001 Fault memory.** If status **ET415** becomes **STATUS 2** without depressing the brake pedal, consult the interpretation of statuses **ET704 Brake contact no. 1** and **ET705 Brake contact no. 2**.

STATUS 3	**Clutch pedal depressed**
	Manual gearbox ONLY The cruise control function is deactivated when the gearbox is not coupled to the engine (clutch pedal depressed). Status **ET415** becomes **STATUS 3** when driving with the cruise control active (**ET042 Cruise control / speed limiter: CRUISE CONTROL**) and the clutch pedal is depressed. This deactivates cruise control. **Reinitialise status ET415 on the injection computer by running command RZ001 Fault memory.** If status **ET415** becomes **STATUS 3** without the clutch pedal being depressed, consult the interpretation of status **ET405 Clutch pedal switch**. If the vehicle is fitted with an automatic transmission: Test the multiplex network: check the configuration of the multiplex network in relation to the vehicle's technical specification, especially the configuration of the automatic transmission computer (see **88B, Multiplexing**).

AFTER REPAIR	Carry out a road test, then check with the **diagnostic tool**.

GETtheMANUALS.org

ET415 CONTINUED 3	

STATUS 4	**Cancel button pressed**
	The cruise control/speed limiter function is deactivated each time the suspend button is pressed. Status **ET415** becomes **STATUS 4**, when driving when: – Either the cruise control is active, or – the speed limiter is active – and when the **"0"** button is pressed by the driver. This action deactivates the Cruise control/Speed limiter. **Reinitialise status ET415 on the injection computer by running command RZ001 Fault memory.** If status **ET415** becomes **STATUS 4** without pressing the **0** button, consult the interpretation of status **ET703 Cruise control / speed limiter buttons** and run fault finding on the **R/0** control button located on the right-hand side of the steering wheel.

STATUS 5	**Cruise control or speed limiter monitoring**
	This status appears when the vehicle brakes or decelerates sharply without the injection computer receiving a signal that the brake pedal switch has been pressed. If status **ET415** is **STATUS 5**, consult the interpretation: - of status **ET042 Cruise control / speed limiter**, - of status **ET703 Cruise control / speed limiter buttons**, - of status **ET704 Brake switch no. 1**, - of status **ET705 Brake switch no. 2**, to test the cruise control/speed limiter system components and find the defective component. In addition, check the operation of the accelerator pedal, and use the **diagnostic tool** to check for any faults associated with the accelerator pedal. Deal with them if necessary.

AFTER REPAIR	Carry out a road test, then check with the **diagnostic tool**.

GETtheMANUALS.org

ET415 CONTINUED 4	

STATUS 5	**Reinitialise status ET415 on the injection computer by running command RZ001 Fault memory.** If status **ET415** changes to **STATUS 5**, deal with **present** faults or those **stored** in the injection computer. If the fault is still present, contact the Techline.

STATUS 6	**Gear lever in neutral (manual gearbox) or neutral (automatic gearbox)**
	Status **ET415** changes to **STATUS 6**, when driving, with cruise control active (**ET042: CRUISE CONTROL**) and: – if the driver puts the gear lever in neutral position on a manual gearbox without declutching or, – if the gear lever is put in neutral on an automatic transmission. This deactivates cruise control. **Reinitialise status ET415 on the injection computer by running command RZ001 Fault memory.** If status **ET415** becomes **STATUS 6** without shifting the gear lever into neutral on a manual gearbox without declutching, or into the neutral position on an automatic transmission, run fault finding on the ABS computer and check the configuration of the tyre size stored in the computer. If the configuration is correct, contact the Techline.

AFTER REPAIR	Carry out a road test, then check with the **diagnostic tool**.

GETtheMANUALS.org

ET415 CONTINUED 5	

STATUS 7	**Lack of correlation between the request and the vehicle speed**
	Status **ET415** becomes **STATUS 7** if the computer detects too great a difference between the speed requested by the driver and the vehicle speed. This could occur when driving with the cruise control active (**ET042 Cruise control / speed limiter: CRUISE CONTROL**) on very steep terrain. This inconsistency deactivates cruise control. **Reinitialise status ET415 on the injection computer by running command RZ001 Fault memory.** If status **ET415** becomes **STATUS 7** where the surface is not uneven, contact the Techline.

STATUS 8	**Automatic gearbox in defect mode.**
	Status **ET415** becomes **STATUS 8**, when driving with cruise control active (**ET042: CRUISE CONTROL**) and if the automatic transmission is in defect mode. This signal is conveyed on the **multiplex line** and deactivates the cruise control. Carry out a multiplex network test, then run fault finding on the automatic transmission computer. Deal with any **present** or **stored** faults (see **23A, Automatic transmission**). Clear the automatic transmission computer memory by running command **RZ001**. **Reinitialise status ET415 on the injection computer by running command RZ001 Fault memory.** If **STATUS 8** is still present, contact the Techline.

AFTER REPAIR	Carry out a road test, then check with the **diagnostic tool**.

GETtheMANUALS.org

ET415 CONTINUED 6	

STATUS 9	**Vehicle speed monitoring.**
	Status **ET415** becomes **STATUS 9** if the vehicle speed received by the computer is invalid or absent. This signal is conveyed on the **multiplex line** and deactivates the cruise control. Carry out a multiplex network test, then run fault finding on the **ABS** computer. Deal with any **present** or **stored** faults (see **38C, Anti-lock braking system, Interpretation of faults**). **Reinitialise status ET415 on the injection computer by running command RZ001 Fault memory.** If **STATUS 9** is still present, contact the Techline.

STATUS 10	**Monitoring by injection computer.**
	Status **ET415** becomes **STATUS 10** when driving with cruise control active (**ET042 Cruise control / speed limiter: CRUISE CONTROL**) and if the injection computer detects a fault anywhere in the engine management system, or an engine overspeed or underspeed. This signal is conveyed on the **multiplex line** and deactivates the cruise control. Carry out a multiplex network test, then Perform fault finding on the injection computer. Deal with any **present** or **stored** faults (see **Interpretation of faults**). **Reinitialise status ET415 on the injection computer by running command RZ001.** If **STATUS 10** is still present, contact the Techline.

AFTER REPAIR	Carry out a road test, then check with the **diagnostic tool**.

GETtheMANUALS.org

ET587	RECIRCULATED EXHAUST GAS COOLING

STATUS DEFINITION	**ACTIVE:** This status indicates that exhaust gas cooling is recirculated. **INACTIVE:** This status indicates that exhaust gas cooling is not recirculated.

NOTES	**Special notes:** Only perform these tests if the parameters do not correspond with the system operation programming.

Conformity check: Engine stopped and ignition on, or engine running, and engine coolant temperature > 80°C

INACTIVE:
According to computer programming.
In the event of a fault, consult the interpretation of faults **DF209 EGR valve position sensor circuit** and **DF647 EGR valve position regulation**.

AFTER REPAIR	Carry out a road test, then check with the **diagnostic tool**.

EDC16CP33_V18_ET587 / EDC16CP33_V1C_ET587 / EDC16CP33_V54_ET587 / EDC16CP33_V20_ET587 / EDC16CP33_V58_ET587 / EDC16CP33_V5C_ET587 / EDC16CP33_V24_ET587 / EDC16CP33_V04_ET587 / EDC16CP33_V08_ET587 / EDC16CP33_V44_ET587 / EDC16CP33_V4C_ET587 / EDC16CP33_V34_ET587 / EDC16CP33_V38_ET587 / EDC16CP33_V74_ET587 / EDC16CP33_V28_ET587 / EDC16CP33_V62_ET587 / EDC16CP33_V26_ET587 / EDC16CP33_V60_ET587

GETtheMANUALS.org

ET615	AUTOMATIC GEARBOX LEVER POSITION

STATUS DEFINITION	Neutral, 1, 2, 3, 4, 5, 6, reverse.

NOTES	**Special notes:** Only perform these tests if the statuses do not correspond with the system programming functions. **Note:** This status is specific to engine types **M9R 721** and **M9R 761**.

Conformity check with engine stopped and ignition on, or engine running, and engine coolant temperature > 80°C

NEUTRAL	This status indicates that the gear lever is in neutral. If this status is incorrect, perform a multiplex network test (see **88B, Multiplexing**). Run fault finding on the automatic transmission computer (see **MR 372 (Scénic II ph 2), 407 (Espace IV ph 2), 23A, Automatic transmission**).
1	This status indicates that the gearbox is in 1st gear. If this status is incorrect, perform a multiplex network test (see **88B, Multiplexing**). Run fault finding on the automatic transmission computer (see **MR 372 (Scénic II ph 2), 407 (Espace IV ph 2), 23A, Automatic transmission**).
2	This status indicates that the gearbox is in 2nd gear. If this status is incorrect, perform a multiplex network test (see **88B, Multiplexing**). Run fault finding on the automatic transmission computer (see **MR 372 (Scénic II ph 2), 407 (Espace IV ph 2), 23A, Automatic transmission**).

AFTER REPAIR	Carry out a road test, then check with the **diagnostic tool**.

EDC16CP33_V18_ET615 / EDC16CP33_V1C_ET615 / EDC16CP33_V54_ET615 / EDC16CP33_V20_ET615 / EDC16CP33_V58_ET615 / EDC16CP33_V5C_ET615 / EDC16CP33_V24_ET615 / EDC16CP33_V28_ET615 / EDC16CP33_V62_ET615 / EDC16CP33_V26_ET615 / EDC16CP33_V60_ET615

GETtheMANUALS.org

ET615 CONTINUED	
3	This status indicates that the gearbox is in 3rd gear. If this status is incorrect, perform a multiplex network test (see **88B, Multiplexing**). Run fault finding on the automatic transmission computer (see **MR 372 (Scénic II ph 2), 407 (Espace IV ph 2), 23A, Automatic transmission**).
4	This status indicates that the gearbox is in 4th gear. If this status is incorrect, perform a multiplex network test (see **88B, Multiplexing**). Run fault finding on the automatic transmission computer (see **MR 372 (Scénic II ph 2), 407 (Espace IV ph 2), 23A, Automatic transmission**).
5	This status indicates that the gearbox is in 5th gear. If this status is incorrect, perform a multiplex network test (see **88B, Multiplexing**). Run fault finding on the automatic transmission computer (see **MR 372 (Scénic II ph 2), 407 (Espace IV ph 2), 23A, Automatic transmission**).
6	This status indicates that the gearbox is in 6th gear. If this status is incorrect, perform a multiplex network test (see **88B, Multiplexing**). Run fault finding on the automatic transmission computer (see **MR 372 (Scénic II ph 2), 407 (Espace IV ph 2), 23A, Automatic transmission**).
REVERSE	This status indicates that the gear lever is in the reverse gear position. If this status is incorrect, perform a multiplex network test (see **88B, Multiplexing**). Run fault finding on the automatic transmission computer (see **MR 372 (Scénic II ph 2), 407 (Espace IV ph 2), 23A, Automatic transmission**).

AFTER REPAIR	Carry out a road test, then check with the **diagnostic tool**.

GETtheMANUALS.org

ET651	EGR PROGRAMMING CUT-OFF
STATUS DEFINITION	This status indicates the operating mode of the EGR valve and has 25 different definitions: **STATUS 1 to 24** or **NONE**.
NOTES	None.
NONE	**No EGR cut-off, the EGR valve is operating correctly in accordance with the computer programs.**
STATUSES 1, 5, 6, 7, 9, 10, 12, 13, 15, 19, 23, 24	Switch off the engine and wait for the **diagnostic tool** message (maximum time **8 minutes**) **Communication lost with the computer: EDC16CP33, check the tool connection and computer supply**. Switch the ignition on and check for faults. Check the battery voltage with the engine switched off and the engine running. If no faults are **present** or **stored**, restart the vehicle and test at idle speed. Do not accelerate too much or attain an engine speed that is too high.
STATUSES 3, 14, 16	Accelerate above idle speed for a few seconds.
STATUS 2	Check that the clutch pedal status **(ET405 Clutch pedal switch)** is not **ACTIVE**, and that the vehicle has stopped completely.

AFTER REPAIR	Carry out a road test, then check with the **diagnostic tool**.

EDC16CP33_V18_ET651 / EDC16CP33_V1C_ET651 / EDC16CP33_V54_ET651 / EDC16CP33_V20_ET651 / EDC16CP33_V58_ET651 / EDC16CP33_V5C_ET651 / EDC16CP33_V24_ET651 / EDC16CP33_V04_ET651 / EDC16CP33_V08_ET651 / EDC16CP33_V44_ET651 / EDC16CP33_V4C_ET651 / EDC16CP33_V34_ET651 / EDC16CP33_V38_ET651 / EDC16CP33_V74_ET651 / EDC16CP33_V28_ET651 / EDC16CP33_V62_ET651 / EDC16CP33_V26_ET651 / EDC16CP33_V60_ET651

GETtheMANUALS.org

ET651 CONTINUED	
STATUS 4, 17	Check for present and stored faults, and repair.
STATUS 8	Reset the EGR offsets by consulting the interpretation of command **SC036 Reinitialise programming** and select **EGR valve**.
STATUS 11, 22	Allow the engine to heat up until this cut-off disappears.
STATUS 18	Check that the regeneration of the particle filter in progress has completely finished.
STATUS 20	Allow the engine to cool until this cut-off disappears.
STATUS 21	Too low atmospheric pressure, the EGR valve is disabled.

AFTER REPAIR	Carry out a road test, then check with the **diagnostic tool**.

GETtheMANUALS.org

ET703	CRUISE CONTROL/SPEED LIMITER BUTTONS

STATUS DEFINITION	**RESUME: R** button pressed. **SUSPEND: 0** button pressed. **PLUS:** Increase button pressed. **MINUS:** Decrease button pressed. **INACTIVE:** This status indicates that no button has been pressed.

NOTES	**Special notes:** Only perform these tests if the parameters do not correspond with the system operation programming.

Conformity check with engine stopped and ignition on, or engine running, and engine coolant temperature > 80°C

"INACTIVE"	When no button has been pressed. In the event of a fault, refer to the interpretation of status **ET703**.
"SUSPEND"	**'0'** button pressed. In the event of a fault, refer to the interpretation of status **ET703**.
"REACTIVATE"	**'R'** button pressed. In the event of a fault, refer to the interpretation of status **ET703**.
"MINUS"	Decrease button pressed. In the event of a fault, refer to the interpretation of status **ET703**.
"PLUS"	Increase button pressed. In the event of a fault, refer to the interpretation of status **ET703**.

AFTER REPAIR	Carry out a road test, then check with the **diagnostic tool**.

EDC16CP33_V18_ET703 / EDC16CP33_V1C_ET703 / EDC16CP33_V54_ET703 / EDC16CP33_V20_ET703 / EDC16CP33_V58_ET703 / EDC16CP33_V5C_ET703 / EDC16CP33_V24_ET703 / EDC16CP33_V04_ET703 / EDC16CP33_V08_ET703 / EDC16CP33_V44_ET703 / EDC16CP33_V4C_ET703 / EDC16CP33_V34_ET703 / EDC16CP33_V38_ET703 / EDC16CP33_V74_ET703 / EDC16CP33_V28_ET703 / EDC16CP33_V62_ET703 / EDC16CP33_V26_ET703 / EDC16CP33_V60_ET703

GETtheMANUALS.org

ET703 CONTINUED 1	

Sensor electrical conformity

"INACTIVE"	Status **ET703** becomes **INACTIVE** when none of the cruise control / speed limiter buttons is pressed. These buttons are located on the steering wheel. If status **ET703** does not display **INACTIVE**, – check the condition of the cruise control / speed limiter **+/-** button and the condition of its connector, – check the condition of the cruise control / speed limiter **R/0** button and the condition of its connector.
"PLUS"	Status **ET703** becomes **PLUS** when the cruise control / speed limiter **+** button is pressed. This button is on the steering wheel, on the left-hand side. If status **ET703** does not display **INCREASE**, check the condition of the cruise control/speed limiter **+/-** button and the condition of its connector. Repair if necessary. To perform these checks and measurements in complete safety, observe the recommendations for removing the driver's front airbag (see **MR Mechanical, 88C, Airbag and pretensioners, Driver's front airbag: Removal - Refitting**). Measure **the resistance** of the following connections while pressing the **+** button (on the button connections): • **86G** of component **331**, • **86M** of component **331.** If the connection or connections are faulty and there is a repair procedure (see **Technical Note 6015A, Electrical wiring repair, Wiring: Precautions for repair**), repair the wiring, otherwise replace it. If the resistance is not approximately **300** Ω, check the **continuity** of the connection when the button is not pressed. If there is continuity, replace the **+/-** control button. If the connection or connections are faulty and there is a repair procedure (see **Technical Note 6015A, Electrical wiring repair, Wiring: Precautions for repair**), repair the wiring, otherwise replace it.

AFTER REPAIR	Carry out a road test, then check with the **diagnostic tool**.

GETtheMANUALS.org

ET703 CONTINUED 2	

"MINUS"	Status **ET703** becomes **DECREASE** when the **-** button of the cruise control/speed limiter is pressed. This button is on the steering wheel, on the left-hand side. If status **ET703** does not change to **MINUS**, check the condition of the cruise control/ speed limiter **+/-** button, and the condition of its connector. Repair if necessary. To perform these checks and measurements in complete safety, observe the recommendations for removing the driver's front airbag (see **MR Mechanical, 88C, Airbag and pretensioners, Driver's front airbag: Removal - Refitting**). Measure **the resistance** of the following connections while pressing the **-** button (on the button connections): • **86G** of component **331**, • **86M** of component **331.** If the connection or connections are faulty and there is a repair procedure (see **Technical Note 6015A, Electrical wiring repair, Wiring: Precautions for repair**), repair the wiring, otherwise replace it. If the resistance is not approximately **100** Ω check the **continuity** of the connection when the button is not pressed. If there is **continuity**, replace the **+/-** control button. If the connection or connections are faulty and there is a repair procedure (see **Technical Note 6015A, Electrical wiring repair, Wiring: Precautions for repair**), repair the wiring, otherwise replace it.

AFTER REPAIR	Carry out a road test, then check with the **diagnostic tool**.

GETtheMANUALS.org

ET703 CONTINUED 3	

"SUSPEND"	Status **ET703** becomes **SUSPEND** when the cruise control / speed limiter **0** button is pressed. This button is located on the steering wheel, to the right. If status **ET703** does not change to **SUSPEND**, check the condition of the cruise control / speed limiter **R/0** button, and the condition of its connector. To perform these checks and measurements in complete safety, observe the recommendations for removing the driver's front airbag (see **MR Mechanical, 88C, Airbag and pretensioners, Driver's front airbag: Removal - Refitting**). Measure **the resistance** of the following connections while pressing the **0** button (on the button connections): • **86G** of component **331**, • **86M** of component **331.** If the connection or connections are faulty and there is a repair procedure (see **Technical Note 6015A, Electrical wiring repair, Wiring: Precautions for repair**), repair the wiring, otherwise replace it. If the resistance is not approximately **0** Ω, replace the **R/0** control button. If there is **continuity**, replace the **R/0** control button. If there is a repair method (see **Technical Note 6015A, Repairing electrical wiring, Wiring: Precautions for repair**), repair the wiring, otherwise replace it.

AFTER REPAIR	Carry out a road test, then check with the **diagnostic tool**.

GETtheMANUALS.org

ET703 CONTINUED 4	

"REACTIVATE"	Status **ET703** becomes **RESUME** when the **R** button of the cruise control/speed limiter is pressed. This button is located on the steering wheel, to the right. If status **ET703** does not change to **RESUME**, check the status of the cruise control/ speed limiter **R/0** button, and the status of its connector. Repair if necessary. To perform these checks and measurements in complete safety, observe the recommendations for removing the driver's front airbag (see **MR Mechanical, 88C, Airbag and pretensioners, Driver's front airbag: Removal - Refitting**). Measure **the resistance** of the following connections while pressing the **R** button (on the button connections): • **86G** of component **331**, • **86M** of component **331.** If the connection or connections are faulty and there is a repair procedure (see **Technical Note 6015A, Electrical wiring repair, Wiring: Precautions for repair**), repair the wiring, otherwise replace it. If the resistance is not approximately **900** Ω, check the **continuity** of the connection when the button is not pressed. If there is continuity, replace the **R/0** control button. If there is a repair method (see **Technical Note 6015A, Repairing electrical wiring, Wiring: Precautions for repair**), repair the wiring, otherwise replace it.

AFTER REPAIR	Carry out a road test, then check with the **diagnostic tool**.

GETtheMANUALS.org

ET704 **ET705**	BRAKE SWITCH NO. 1 BRAKE SWITCH NO. 2

STATUS DEFINITION	**ACTIVE**: This status indicates that the brake pedal is depressed. **INACTIVE**: This status indicates that the brake pedal is released.

NOTES	**Note:** Statuses **ET704** and **ET705** must change specification at the same time. If they are inconsistent, refer to the interpretation of fault **DF228 Brake signal**.

Conformity check with engine stopped and ignition on, or engine running, and engine coolant temperature > 80°C

"ACTIVE"	**Brake pedal depressed.** A brake signal non-conformity may cause the engine to race during gear changes. In the event of a fault, consult the interpretation of **ET704** and **ET705**.
"INACTIVE"	**Brake pedal released.** A brake signal non-conformity may cause the engine to race during gear changes. In the event of a fault, consult the interpretation of **ET704** and **ET705**.

AFTER REPAIR	Carry out a road test, then check with the **diagnostic tool**.

EDC16CP33_V18_ET704 / EDC16CP33_V18_ET705 / EDC16CP33_V1C_ET704 / EDC16CP33_V1C_ET705 / EDC16CP33_V54_ET704 / EDC16CP33_V54_ET705 / EDC16CP33_V20_ET704 / EDC16CP33_V20_ET705 / EDC16CP33_V58_ET704 / EDC16CP33_V58_ET705 / EDC16CP33_V5C_ET704 / EDC16CP33_V5C_ET705 / EDC16CP33_V24_ET704 / EDC16CP33_V24_ET705 / EDC16CP33_V04_ET704 / EDC16CP33_V04_ET705 / EDC16CP33_V08_ET704 / EDC16CP33_V08_ET705 / EDC16CP33_V44_ET704 / EDC16CP33_V44_ET705 / EDC16CP33_V4C_ET704 / EDC16CP33_V4C_ET705 / EDC16CP33_V34_ET704 / EDC16CP33_V34_ET705 / EDC16CP33_V38_ET704 / EDC16CP33_V38_ET705 / EDC16CP33_V74_ET704 / EDC16CP33_V74_ET705 / EDC16CP33_V28_ET704 / EDC16CP33_V28_ET705 / EDC16CP33_V62_ET704 / EDC16CP33_V62_ET705 / EDC16CP33_V26_ET704 / EDC16CP33_V60_ET704 / EDC16CP33_V26_ET705 / EDC16CP33_V60_ET705

GETtheMANUALS.org

ET704 ET705 CONTINUED 1	

Sensor electrical conformity

"ACTIVE" or "INACTIVE"

If the brake lights are working:
– check **the continuity** and **the absence of interference resistance** on the following connection:

- **5A** between components **160 and 120 / 645 / 119**.

If there is a repair procedure (see **Technical Note 6015A, Electrical wiring repair, Wiring: Precautions for repair**), repair the wiring, otherwise replace the wiring.

If the brake lights are not operational, check:
– the condition and fitting of the brake switch,
– the condition and conformity of the brake light fuse,
– the conformity of the values in the following table:

For **MEGANE II ph2** and **SCENIC II ph2** with ESP:

	Continuity between connections:	**Insulation** between connections:
Switch engaged (Brake pedal released)	**5A** and **BPT**	**65G** and **SP17**
Switch released (Brake pedal depressed)	**65G** and **SP17**	**5A** and **BPT**

For **MEGANE II ph2** and **SCENIC II ph2** without ESP:

	Continuity between connections:	**Insulation** between connections:
Switch engaged (Brake pedal released)	**5A BPT**	**65A SP17**
Switch released (Brake pedal depressed)	**65A SP17**	**5A BPT**

AFTER REPAIR	Carry out a road test, then check with the **diagnostic tool**.

GETtheMANUALS.org

ET704 ET705 CONTINUED 2	

"ACTIVE" or "INACTIVE"

For **Laguna II ph2** and **Espace IV ph2**

	Continuity between connections:	**Insulation** between connections:
Switch engaged (Brake pedal released)	**5A** and **SP13**	**65A** and **AP10**
Switch released (Brake pedal depressed)	**65A** and **AP10**	**5A** and **SP13**

For **Vel Satis ph2**

	Continuity between connections:	**Insulation** between connections:
Switch engaged (Brake pedal released)	**5A** and **SP13**	**65G** and **AP10**
Switch released (Brake pedal depressed)	**65G** and **AP10**	**5A** and **SP13**

Replace the switch if the values obtained are not correct.

AFTER REPAIR	Carry out a road test, then check with the **diagnostic tool**.

GETtheMANUALS.org

ET706	STORED ENGINE STATUS NO. 1
ET707	STORED ENGINE STATUS NO. 2
ET708	STORED ENGINE STATUS NO. 3
ET709	STORED ENGINE STATUS NO. 4
ET710	STORED ENGINE STATUS NO. 5
ET711	STORED ENGINE STATUS NO. 6
ET712	STORED ENGINE STATUS NO. 7
ET713	STORED ENGINE STATUS NO. 8
ET714	STORED ENGINE STATUS NO. 9
ET715	STORED ENGINE STATUS NO. 10

STATUS DEFINITION	These statuses indicate the recorded engine status in the event of a regeneration failure when driving.

NOTES	**Special notes:** These parameters must only be interpreted for **DF312 Speed request** if it is **present** or **stored**.

AFTER REPAIR	Carry out a road test, then check with the **diagnostic tool**.

EDC16CP33_V18_ET706 / EDC16CP33_V18_ET707 / EDC16CP33_V18_ET708 / EDC16CP33_V18_ET709 / EDC16CP33_V18_ET710 / EDC16CP33_V18_ET711 / EDC16CP33_V18_ET712 / EDC16CP33_V18_ET713 / EDC16CP33_V18_ET714 / EDC16CP33_V18_ET715 / EDC16CP33_V1C_ET706 / EDC16CP33_V1C_ET707 / EDC16CP33_V1C_ET708 / EDC16CP33_V1C_ET709 / EDC16CP33_V1C_ET710 / EDC16CP33_V1C_ET711 / EDC16CP33_V1C_ET712 / EDC16CP33_V1C_ET713 / EDC16CP33_V1C_ET714 / EDC16CP33_V1C_ET715 / EDC16CP33_V54_ET706 / EDC16CP33_V54_ET707 / EDC16CP33_V54_ET708 / EDC16CP33_V54_ET709 / EDC16CP33_V54_ET710 / EDC16CP33_V54_ET711 / EDC16CP33_V54_ET712 / EDC16CP33_V54_ET712 / EDC16CP33_V54_ET713 / EDC16CP33_V54_ET714 / EDC16CP33_V54_ET715 / EDC16CP33_V20_ET706 / EDC16CP33_V20_ET707 / EDC16CP33_V20_ET708 / EDC16CP33_V20_ET709 / EDC16CP33_V20_ET710 / EDC16CP33_V20_ET711 / EDC16CP33_V20_ET712 / EDC16CP33_V20_ET713 / EDC16CP33_V20_ET714 / EDC16CP33_V20_ET715 / EDC16CP33_V58_ET706 / EDC16CP33_V58_ET707 / EDC16CP33_V58_ET708 / EDC16CP33_V58_ET709 / EDC16CP33_V58_ET710 / EDC16CP33_V58_ET711 / EDC16CP33_V58_ET712 / EDC16CP33_V58_ET713 / EDC16CP33_V58_ET714 / EDC16CP33_V58_ET715 / EDC16CP33_V5C_ET706 / EDC16CP33_V5C_ET707 / EDC16CP33_V5C_ET708 / EDC16CP33_V5C_ET709 / EDC16CP33_V5C_ET710 / EDC16CP33_V5C_ET711 / EDC16CP33_V5C_ET712 / EDC16CP33_V5C_ET713 / EDC16CP33_V5C_ET714 / EDC16CP33_V5C_ET715 / EDC16CP33_V24_ET706 / EDC16CP33_V24_ET707 / EDC16CP33_V24_ET708 / EDC16CP33_V24_ET709 / EDC16CP33_V24_ET710 / EDC16CP33_V24_ET711 / EDC16CP33_V24_ET712 / EDC16CP33_V24_ET713 / EDC16CP33_V24_ET714 / EDC16CP33_V24_ET715 / EDC16CP33_V26_ET706 / EDC16CP33_V26_ET707 / EDC16CP33_V26_ET708 / EDC16CP33_V26_ET709 / EDC16CP33_V26_ET710 / EDC16CP33_V26_ET711 / EDC16CP33_V26_ET712 / EDC16CP33_V26_ET713 / EDC16CP33_V26_ET714 / EDC16CP33_V26_ET715 / EDC16CP33_V60_ET706 / EDC16CP33_V60_ET707 / EDC16CP33_V60_ET708 / EDC16CP33_V60_ET709 / EDC16CP33_V60_ET710 / EDC16CP33_V60_ET711 / EDC16CP33_V60_ET712 / EDC16CP33_V60_ET713 / EDC16CP33_V60_ET714 / EDC16CP33_V60_ET715

GETtheMANUALS.org

ET706 **ET707** **ET708** **ET709** **ET710** **ET711** **ET712** **ET713** **ET714** **ET715** **CONTINUED**	

Conformity check: Engine stopped and ignition on, or engine running, and engine coolant temperature > 80°C

This status indicates the recorded engine status in the event of a regeneration failure when driving: **NONE**, **+ AFTER IGNITION**, **RUNNING**, **STOPPED**.

Each **STATUS** between **ET706** and **ET715** corresponds to failed regenerations for which the mileage is recorded by **PR794 Stored regeneration failure No. 1** to **PR803 Stored regeneration failure No. 10** (for example, **PR797 Stored regeneration failure No. 4** is linked to **ET709**).

"RUNNING"	If the **STATUS** is **RUNNING**, the regeneration failed because: – the customer's driving did not generate enough heat, – an engine management system component is defective.
"STOPPED"	If the **STATUS** is **STOPPED**, the regeneration failed because the engine was switched off.
+ APC	POWER LATCH
"NONE"	No failed regeneration is present.

AFTER REPAIR	Carry out a road test, then check with the **diagnostic tool**.

GETtheMANUALS.org

ET742	STORED REGEN. REQUEST STATUS No. 1
ET743	STORED REGEN. REQUEST STATUS No. 2
ET744	STORED REGEN. REQUEST STATUS No. 3
ET745	STORED REGEN. REQUEST STATUS No. 4
ET746	STORED REGEN. REQUEST STATUS No. 5
ET747	STORED REGEN. REQUEST STATUS No. 6
ET748	STORED REGEN. REQUEST STATUS No. 7
ET749	STORED REGEN. REQUEST STATUS No. 8
ET750	STORED REGEN. REQUEST STATUS No. 9
ET751	STORED REGEN. REQUEST STATUS No. 10

STATUS DEFINITION	Statuses **ET742** to **ET751** correspond to the causes for the regeneration request. They are associated with the parameters **PR816 Stored regeneration start No. 1** to **PR825 Stored regeneration start No. 10** which contain the record of the vehicle mileage at the start of regeneration (e.g. **PR745 Stored regeneration start No. 4** is associated with **ET745**).

NOTES	**Special notes:** These statuses should only be interpreted for **ALP 9 Particle filter warning light comes on too frequently**.

AFTER REPAIR	Carry out a road test, then check with the **diagnostic tool**.

EDC16CP33_V18_ET742 / EDC16CP33_V18_ET743 / EDC16CP33_V18_ET744 / EDC16CP33_V18_ET745 / EDC16CP33_V18_ET746 / EDC16CP33_V18_ET747 / EDC16CP33_V18_ET748 / EDC16CP33_V18_ET749 / EDC16CP33_V18_ET750 / EDC16CP33_V18_ET751 / EDC16CP33_V1C_ET742 / EDC16CP33_V1C_ET743 / EDC16CP33_V1C_ET744 / EDC16CP33_V1C_ET745 / EDC16CP33_V1C_ET746 / EDC16CP33_V1C_ET747 / EDC16CP33_V1C_ET748 / EDC16CP33_V1C_ET749 / EDC16CP33_V1C_ET750 / EDC16CP33_V1C_ET751 / EDC16CP33_V54_ET742 / EDC16CP33_V54_ET743 / EDC16CP33_V54_ET744 / EDC16CP33_V54_ET745 / EDC16CP33_V54_ET746 / EDC16CP33_V54_ET747 / EDC16CP33_V54_ET748 / EDC16CP33_V54_ET748 / EDC16CP33_V54_ET749 / EDC16CP33_V54_ET750 / EDC16CP33_V54_ET751 / EDC16CP33_V20_ET742 / EDC16CP33_V20_ET743 / EDC16CP33_V20_ET744 / EDC16CP33_V20_ET745 / EDC16CP33_V20_ET746 / EDC16CP33_V20_ET747 / EDC16CP33_V20_ET748 / EDC16CP33_V20_ET749 / EDC16CP33_V20_ET750 / EDC16CP33_V20_ET751 / EDC16CP33_V58_ET742 / EDC16CP33_V58_ET743 / EDC16CP33_V58_ET744 / EDC16CP33_V58_ET745 / EDC16CP33_V58_ET746 / EDC16CP33_V58_ET747 / EDC16CP33_V58_ET748 / EDC16CP33_V58_ET749 / EDC16CP33_V58_ET750 / EDC16CP33_V58_ET751 / EDC16CP33_V5C_ET742 / EDC16CP33_V5C_ET743 / EDC16CP33_V5C_ET744 / EDC16CP33_V5C_ET745 / EDC16CP33_V5C_ET746 / EDC16CP33_V5C_ET747 / EDC16CP33_V5C_ET748 / EDC16CP33_V5C_ET749 / EDC16CP33_V5C_ET750 / EDC16CP33_V5C_ET751 / EDC16CP33_V24_ET742 / EDC16CP33_V24_ET743 / EDC16CP33_V24_ET744 / EDC16CP33_V24_ET745 / EDC16CP33_V24_ET746 / EDC16CP33_V24_ET747 / EDC16CP33_V24_ET748 / EDC16CP33_V24_ET749 / EDC16CP33_V24_ET750 / EDC16CP33_V24_ET751 / EDC16CP33_V26_ET742 / EDC16CP33_V26_ET743 / EDC16CP33_V26_ET744 / EDC16CP33_V26_ET745 / EDC16CP33_V26_ET746 / EDC16CP33_V26_ET747 / EDC16CP33_V26_ET748 / EDC16CP33_V26_ET749 / EDC16CP33_V26_ET750 / EDC16CP33_V26_ET751 / EDC16CP33_V60_ET742 / EDC16CP33_V60_ET743 / EDC16CP33_V60_ET744 / EDC16CP33_V60_ET745 / EDC16CP33_V60_ET746 / EDC16CP33_V60_ET747 / EDC16CP33_V60_ET748 / EDC16CP33_V60_ET749 / EDC16CP33_V60_ET750 / EDC16CP33_V60_ET751

GETtheMANUALS.org

ET742 **ET743** **ET744** **ET745** **ET746** **ET747** **ET748** **ET749** **ET750** **ET751** **CONTINUED**	

Conformity check with engine stopped and ignition on, or engine running, and engine coolant temperature > 80°C

STATUS1	**Request by weight of soot** Regeneration was requested based on the measurement of maximum soot weight in the particle filter, without the particle filter warning light coming on.
STATUS2	**Request by estimated weight of soot** Regeneration was requested based on an estimation of maximum soot weight in the particle filter, without the particle filter warning light coming on.
STATUS3	**Request by distance travelled** Regeneration has been requested after a maximum distance has been travelled since the last successful regeneration without the particle filter warning light coming on.
STATUS4	**Request by number of regeneration failures or weight of soot** This status corresponds to the appearance of **DF312 Speed request**. This corresponds to the maximum number of failed regeneration or to the maximum weight of soot in the particle filter, with the particle filter warning light coming on.

AFTER REPAIR	Carry out a road test, then check with the **diagnostic tool**.

GETtheMANUALS.org

ET776	RECIRCULATED EXHAUST GAS COOL* SETPOINTS

STATUS DEFINITION	**ACTIVE**: This status indicates that the recirculated exhaust gas cooling setpoint is active. **INACTIVE**: This status indicates that the recirculated exhaust gas cooling setpoint is not active.

NOTES	None.

Conformity check: Engine stopped and ignition on and Engine running and engine coolant temperature > 80°C

This status gives a setpoint for status **ET587 Recirculated exhaust gas cooling**. This programming changes depending on the computer.
In the event of a fault, see the interpretation of faults **DF209 EGR valve position sensor circuit** and **DF647 EGR valve position regulation.**

COOL*: Cooling

AFTER REPAIR	Carry out a road test, then check with the **diagnostic tool**.

GETtheMANUALS.org

ET781	HEATER PLUGS

STATUS DEFINITION	This status indicates what type of heater plugs are fitted to the engine.

Conformity check with engine stopped and ignition on, or engine running, and engine coolant temperature > 80°C

STATUS1	Slow plugs
STATUS2	Fast plugs
STATUS3	NOT DEFINED

Electrical conformity

STATUS1	Slow plugs
	Status **ET781** is **STATUS 1** if the heater plugs fitted to the engine have black rings, otherwise run command **SC036 Reinitialise programming** and select **HEATER PLUGS** (see **Interpretation of commands**).

AFTER REPAIR	Carry out a road test, then check with the **diagnostic tool**.

GETtheMANUALS.org

ET781 CONTINUED	

STATUS2	Fast plugs
	Status **ET781** is **STATUS 2** if the heater plugs fitted to the engine have white rings, otherwise run command **SC036** and select **HEATER PLUGS** (see **Interpretation of commands**).

STATUS3	NOT DEFINED
	Status **ET781** is **STATUS 3** when the heater plugs are not configured in the injection computer. To determine the heater plugs fitted to the engine, visually check the colour of the plug rings, then run command **SC036** and select **HEATER PLUGS** (see **Interpretation of commands**).

AFTER REPAIR	Carry out a road test, then check with the **diagnostic tool**.

GETtheMANUALS.org

Tool parameter	Diagnostic tool title
PR002	Alternator charge (**Mégane II ph2/Scénic II ph2** only)
PR005	EGR valve opening setpoint
PR006	Rail pressure regulator current
PR007	Rail pressure regulator current setpoint
PR008	Rail reference pressure
PR009	Turbocharging pressure setpoint
PR015	Engine torque
PR017	Fuel flow
PR022	EGR valve position feedback loop difference
PR023	Air flow difference
PR030	Accelerator pedal position
PR035	Atmospheric pressure
PR037	Refrigerant pressure (**Mégane II ph2/Scénic II ph2** only)
PR038	Rail pressure
PR041	Turbocharging pressure
PR042	Filtered turbocharging pressure
PR048	OCR* rail pressure regulation valve
PR051	EGR valve position feedback
PR053	Engine speed requested by air conditioning
PR055	Engine speed
PR059	Inlet air temperature
PR061	Exterior air temperature
PR063	Fuel temperature
PR064	Coolant temperature
PR074	Battery voltage
PR077	EGR valve position sensor voltage

OCR*: Opening Cyclic Ratio

GETtheMANUALS.org

Tool parameter	Diagnostic tool title
PR079	Atmospheric pressure sensor voltage
PR080	Rail pressure sensor voltage
PR082	Fuel temperature sensor voltage
PR083	Air temperature sensor voltage
PR084	Coolant temperature sensor voltage
PR086	Pedal potentiometer voltage gang 1
PR088	Pedal potentiometer gang 2 voltage
PR089	Vehicle speed
PR104	Turbocharging SV* OCR* setpoint
PR128	First EGR valve offset
PR129	Last EGR valve offset
PR130	Cruise control setpoint
PR132	Air flow
PR157	Fuel flow setpoint
PR171	Air flow setpoint for EGR
PR190	Engine idle speed setpoint.
PR209	Turbocharging pressure loop difference
PR213	Rail pressure loop difference
PR224	Turbocharging pressure sensor voltage
PR225	Air flow sensor voltage
PR290	AC refrigerant pressure sensor voltage (**Mégane II ph2/Scénic II ph2** only)
PR364	Cylinder no. 1 fuel flow correction
PR365	Cylinder no. 4 fuel flow correction
PR381	Particle filter downstream temperature
PR382	Particle filter upstream temperature
PR383	Weight of soot in the particle filter

OCR*: Opening Cyclic Ratio
SV*: Solenoid valve

GETtheMANUALS.org

Tool parameter	Diagnostic tool title
PR385	Exhaust pipe flow
PR391	Mileage since particle filter repl*
PR405	Cylinder no. 2 fuel flow correction
PR406	Cylinder no. 3 fuel flow correction
PR412	Mileage at last successful regeneration
PR414	Particle filter diff* pressure
PR415	Time since last regeneration
PR484	Fuel regulation solenoid valve OCR*
PR490	Engine air flow
PR636	Turbine upstream pressure
PR667	Turbine upstream temperature
PR668	Turbine upstream temperature sensor voltage
PR672	Damper valve position setpoint
PR739	Fuel flow solenoid valve current
PR747	Damper valve position
PR782	Turbine upstream pressure sensor voltage
PR784	DF312 recording No. 1
PR785	DF312 recording No. 2
PR786	DF312 recording No. 3
PR787	DF312 recording No. 4
PR788	DF312 recording No. 5
PR789	DF312 recording No. 6
PR790	DF312 recording No. 7
PR791	DF312 recording No. 8

repl*: replacement,
diff.*: differential,
OCR*: Opening Cyclic Ratio.

GETtheMANUALS.org

Tool parameter	Diagnostic tool title
PR792	DF312 recording No. 9
PR793	DF312 recording No. 10
PR794	Stored regeneration failure no. 1
PR795	Stored regeneration failure no. 2
PR796	Stored regeneration failure no. 3
PR797	Stored regeneration failure no. 4
PR798	Stored regeneration failure no. 5
PR799	Stored regeneration failure no. 6
PR800	Stored regeneration failure no. 7
PR801	Stored regeneration failure no. 8
PR802	Stored regeneration failure no. 9
PR803	Stored regeneration failure no. 10
PR808	Supplier 1-0 signal
PR816	Stored regeneration start No.1
PR817	Stored regeneration start No. 2
PR818	Stored regeneration start No.3
PR819	Stored regeneration start No.4
PR820	Stored regeneration start No. 5
PR821	Stored regeneration start No.6
PR822	Stored regeneration start No.7
PR823	Stored regeneration start No.8
PR824	Stored regeneration start No.9
PR825	Stored regeneration start No. 10
PR846	Turbocharging SV* OCR*
PR848	Regeneration failure number
PR850	Fuel flow solen.* current setpoint

OCR*: Opening Cyclic Ratio,
SV*: Solenoid valve,
solen*: solenoid valve.

GETtheMANUALS.org

Tool parameter	Diagnostic tool title
PR858	Damper valve open first offset
PR859	Damper valve closed first offset
PR860	Damper valve closed last offset
PR861	Last open damper valve offset
PR863	Damper valve position feedback
PR873	Oil oxidation signal
PR874	Last service
PR875	Oil dilution signal
PR1012	Weight of soot after regeneration

GETtheMANUALS.org

PR002	ALTERNATOR CHARGE

PARAMETER DEFINITION	This parameter indicates the alternator charge value in %.

NOTES	None.

Conformity check with engine stopped and ignition on, or engine running, and engine coolant temperature > 80°C

The alternator load value changes depending on the battery voltage and the electrical consumers.

AFTER REPAIR	Carry out a road test, then check with the **diagnostic tool**.

GETtheMANUALS.org

PR005	EGR VALVE OPENING VALUE REQUIRED

PARAMETER DEFINITION	This parameter indicates a theoretical opening value for the EGR valve giving optimum engine performance in %.

NOTES	**Special notes:** Only perform these tests if the parameters do not correspond with the system operation programming.

Conformity check: Engine stopped and ignition on

The theoretical opening value for the EGR valve should be between:
- 10 < PR005 < 0%.

Conformity check with the engine running and engine coolant temperature > 80°C

The theoretical opening value for the EGR valve is between:
10 < PR005 < 40%.

AFTER REPAIR	Carry out a road test, then check with the **diagnostic tool**.

EDC16CP33_V18_PR005 / EDC16CP33_V1C_PR005 / EDC16CP33_V54_PR005 / EDC16CP33_V20_PR005 / EDC16CP33_V58_PR005 / EDC16CP33_V5C_PR005 / EDC16CP33_V24_PR005 / EDC16CP33_V04_PR005 / EDC16CP33_V08_PR005 / EDC16CP33_V44_PR005 / EDC16CP33_V4C_PR005 / EDC16CP33_V34_PR005 / EDC16CP33_V38_PR005 / EDC16CP33_V74_PR005 / EDC16CP33_V28_PR005 / EDC16CP33_V62_PR005 / EDC16CP33_V26_PR005 / EDC16CP33_V60_PR005

GETtheMANUALS.org

PR006	RAIL PRESSURE REGULATOR CURRENT

PARAMETER DEFINITION	This parameter indicates the current absorbed by the rail pressure regulator in **mA**.

NOTES	**Special notes:** Only perform these tests if the parameters do not correspond with the system operation programming.

Conformity check: Engine stopped and ignition on, or Engine running, and engine coolant temperature > 80°C

This parameter indicates the current absorbed by the rail pressure regulator **PR006** ≈ **PR007 Rail pressure regulator current setpoint**.
In the event of a fault, consult the interpretation of fault **DF898 Rail pressure regulator circuit**.

AFTER REPAIR	Carry out a road test, then check with the **diagnostic tool**.

EDC16CP33_V18_PR006 / EDC16CP33_V1C_PR006 / EDC16CP33_V54_PR006 / EDC16CP33_V20_PR006 / EDC16CP33_V58_PR006 / EDC16CP33_V5C_PR006 / EDC16CP33_V24_PR006 / EDC16CP33_V04_PR006 / EDC16CP33_V08_PR006 / EDC16CP33_V44_PR006 / EDC16CP33_V4C_PR006 / EDC16CP33_V34_PR006 / EDC16CP33_V38_PR006 / EDC16CP33_V74_PR006 / EDC16CP33_V28_PR006 / EDC16CP33_V62_PR006 / EDC16CP33_V26_PR006 / EDC16CP33_V60_PR006

GETtheMANUALS.org

PR007	RAIL PRESSURE REGULATOR CURRENT SETPOINT

PARAMETER DEFINITION	This parameter indicates the theoretical setpoint for the current absorbed by the rail pressure regulator in **mA**.

NOTES	**Special notes:** Only perform these tests if the parameters do not correspond with the system operation programming.

Conformity check: Engine stopped and ignition on, or Engine running, and engine coolant temperature > 80°C

This parameter indicates the theoretical current absorbed by the rail pressure regulator in **mA**.

AFTER REPAIR	Carry out a road test, then check with the **diagnostic tool**.

EDC16CP33_V18_PR007 / EDC16CP33_V1C_PR007 / EDC16CP33_V54_PR007 / EDC16CP33_V20_PR007 / EDC16CP33_V58_PR007 / EDC16CP33_V5C_PR007 / EDC16CP33_V24_PR007 / EDC16CP33_V04_PR007 / EDC16CP33_V08_PR007 / EDC16CP33_V44_PR007 / EDC16CP33_V4C_PR007 / EDC16CP33_V34_PR007 / EDC16CP33_V38_PR007 / EDC16CP33_V74_PR007 / EDC16CP33_V28_PR007 / EDC16CP33_V62_PR007 / EDC16CP33_V26_PR007 / EDC16CP33_V60_PR007

GETtheMANUALS.org

PR008	RAIL REFERENCE PRESSURES

PARAMETER DEFINITION	This parameter indicates the theoretical rail pressure value for optimum engine operation in **bar**.

NOTES	**Special notes:** Only perform these tests if the parameters do not correspond with the system operation programming.

Conformity check: Engine stopped and ignition on, or Engine running, and engine coolant temperature > 80°C

The theoretical rail pressure value must be between:
200 bar < PR008 < 300 bar.

AFTER REPAIR	Carry out a road test, then check with the **diagnostic tool**.

EDC16CP33_V18_PR008 / EDC16CP33_V1C_PR008 / EDC16CP33_V54_PR008 / EDC16CP33_V20_PR008 / EDC16CP33_V58_PR008 / EDC16CP33_V5C_PR008 / EDC16CP33_V24_PR008 / EDC16CP33_V04_PR008 / EDC16CP33_V08_PR008 / EDC16CP33_V44_PR008 / EDC16CP33_V4C_PR008 / EDC16CP33_V34_PR008 / EDC16CP33_V38_PR008 / EDC16CP33_V74_PR008 / EDC16CP33_V28_PR008 / EDC16CP33_V62_PR008 / EDC16CP33_V26_PR008 / EDC16CP33_V60_PR008

GETtheMANUALS.org

PR009	TURBOCHARGING PRESSURE SETPOINTS

PARAMETER DEFINITION	This parameter indicates the theoretical turbocharging pressure setpoint value in **bar**.

NOTES	**Special notes:** Only perform these tests if the parameters do not correspond with the system operation programming.

Conformity check: Engine stopped and ignition on, or Engine running, and engine coolant temperature > 80°C

The theoretical turbocharging pressure value is a setpoint of:
PR009 ≈ 1 bar.

AFTER REPAIR	Carry out a road test, then check with the **diagnostic tool**.

EDC16CP33_V18_PR009 / EDC16CP33_V1C_PR009 / EDC16CP33_V54_PR009 / EDC16CP33_V20_PR009 / EDC16CP33_V58_PR009 / EDC16CP33_V5C_PR009 / EDC16CP33_V24_PR009 / EDC16CP33_V04_PR009 / EDC16CP33_V08_PR009 / EDC16CP33_V44_PR009 / EDC16CP33_V4C_PR009 / EDC16CP33_V34_PR009 / EDC16CP33_V38_PR009 / EDC16CP33_V74_PR009 / EDC16CP33_V28_PR009 / EDC16CP33_V62_PR009 / EDC16CP33_V26_PR009 / EDC16CP33_V60_PR009

GETtheMANUALS.org

PR015	ENGINE TORQUE

PARAMETER DEFINITION	This parameter indicates the engine torque in **Nm**.

NOTES	None.

Conformity check: Engine running, engine coolant temperature > 80°C, without electrical consumers

The engine torque value must be between:
20 N.m < PR015 < 40 N.m.
This parameter is only valid when the engine is running.

AFTER REPAIR	Carry out a road test, then check with the **diagnostic tool**.

GETtheMANUALS.org

PR017	FUEL FLOW

PARAMETER DEFINITION	This parameter indicates the fuel flow in **mg/st**.

NOTES	**Special notes:** Only perform these tests if the parameters do not correspond with the system operation programming.

Conformity check: Engine stopped and ignition on

The fuel flow value must be:
PR017 = 0 mg/st (ignition on).
In the event of a fault, consult the interpretation of **DF897 Pump pressure regulator circuit**.

Conformity check with the engine running and engine coolant temperature > 80°C

Engine running: PR017 = PR157: Fuel flow setpoint.
In the event of a fault, refer to the interpretation of fault **DF897**.

AFTER REPAIR	Carry out a road test, then check with the **diagnostic tool**.

EDC16CP33_V18_PR017 / EDC16CP33_V1C_PR017 / EDC16CP33_V54_PR017 / EDC16CP33_V20_PR017 / EDC16CP33_V58_PR017 / EDC16CP33_V5C_PR017 / EDC16CP33_V24_PR017 / EDC16CP33_V04_PR017 / EDC16CP33_V08_PR017 / EDC16CP33_V44_PR017 / EDC16CP33_V4C_PR017 / EDC16CP33_V34_PR017 / EDC16CP33_V38_PR017 / EDC16CP33_V74_PR017 / EDC16CP33_V28_PR017 / EDC16CP33_V62_PR017 / EDC16CP33_V26_PR017 / EDC16CP33_V60_PR017

GETtheMANUALS.org

PR022	EGR VALVE POSITION FEEDBACK LOOP DIFFERENCE

PARAMETER DEFINITION	This parameter indicates the percentage difference between the setpoint and the EGR valve position.

NOTES	**Special notes:** Only perform these tests if the parameters do not correspond with the system operation programming.

Conformity check: Engine stopped and ignition on

This parameter indicates the percentage difference between the setpoint and the EGR valve position.
In the event of a fault, consult the interpretation of faults **DF209 EGR valve position sensor circuit** and **DF647 EGR valve position regulation.**

Conformity check with the engine running and engine coolant temperature > 80°C

The **PR022** value must be between:
- 5% < PR022 < + 5%.
In the event of a fault, refer to the interpretation of faults **DF209** and **DF647**.

AFTER REPAIR	Carry out a road test, then check with the **diagnostic tool**.

EDC16CP33_V18_PR022 / EDC16CP33_V1C_PR022 / EDC16CP33_V54_PR022 / EDC16CP33_V20_PR022 / EDC16CP33_V58_PR022 / EDC16CP33_V5C_PR022 / EDC16CP33_V24_PR022 / EDC16CP33_V04_PR022 / EDC16CP33_V08_PR022 / EDC16CP33_V44_PR022 / EDC16CP33_V4C_PR022 / EDC16CP33_V34_PR022 / EDC16CP33_V38_PR022 / EDC16CP33_V74_PR022 / EDC16CP33_V28_PR022 / EDC16CP33_V62_PR022 / EDC16CP33_V26_PR022 / EDC16CP33_V60_PR022

GETtheMANUALS.org

PR023	DIFFERENCE IN AIR FLOW

PARAMETER DEFINITION	This parameter indicates the difference between the inlet air flow and the air entering the engine in **mg/st**.

NOTES	None.

Conformity check: Engine stopped and ignition on, or engine running, and engine coolant temperature > 80°C

In the event of a fault, consult the interpretation of fault **DF056 Air flow sensor circuit**.

AFTER REPAIR	Carry out a road test, then check with the **diagnostic tool**.

GETtheMANUALS.org

PR030	ACCELERATOR PEDAL POSITION

PARAMETER DEFINITION	This parameter indicates the accelerator pedal position as a percentage.

NOTES	**There must be no present or stored faults.** Perform this fault finding procedure: – after finding an inconsistency in the parameter, – after a customer complaint (e.g. lack of power, etc.).

Conformity check: Engine stopped and ignition on, or engine running, and engine coolant temperature > 80°C

If no pressure is being applied to the pedal PR030 = 0%.
In the event of a fault, consult the interpretation of **DF196 Pedal sensor circuit gang 1** or **DF198 Pedal sensor circuit gang 2**.

Sensor electrical conformity

Check the **continuity** and **absence of interference resistance** of the following connections:
– **3LR** between components **120** and **921**,
– **3LS** between components **120** and **921**,
– **3LT** between components **120** and **921**,
– **3LU** between components **120** and **921**,
– **3LW** between components **120** and **921**,
– **3LV** between components **120** and **921**.

If the connection or connections are faulty and there is a repair procedure (see **Technical Note 6015A, Electrical wiring repair, Wiring: Precautions for repair**), repair the wiring, otherwise replace it.

AFTER REPAIR	Carry out a road test, then check with the **diagnostic tool**.

EDC16CP33_V18_PR030 / EDC16CP33_V1C_PR030 / EDC16CP33_V54_PR030 / EDC16CP33_V20_PR030 / EDC16CP33_V58_PR030 / EDC16CP33_V5C_PR030 / EDC16CP33_V24_PR030 / EDC16CP33_V04_PR030 / EDC16CP33_V08_PR030 / EDC16CP33_V44_PR030 / EDC16CP33_V4C_PR030 / EDC16CP33_V34_PR030 / EDC16CP33_V38_PR030 / EDC16CP33_V74_PR030 / EDC16CP33_V28_PR030 / EDC16CP33_V62_PR030 / EDC16CP33_V26_PR030 / EDC16CP33_V60_PR030

GETtheMANUALS.org

PR030 CONTINUED	

The accelerator pedal sensor should be **connected,** the vehicle should have the **ignition on** and the **engine switched off**:

– Check that the accelerator pedal value is:
PR030 = 0%: no load,
100% < PR030 < 120%: full load,
135% < PR030 < 145%: full load after pedal kickdown point.
If the value is not correct, replace the pedal sensor.

AFTER REPAIR	Carry out a road test, then check with the **diagnostic tool**.

GETtheMANUALS.org

PR035	ATMOSPHERIC PRESSURE

PARAMETER DEFINITION	This parameter indicates the atmospheric pressure in **bar**. The sensor is integrated in the computer.

NOTES	**Special notes:** Only perform these tests if the parameters do not correspond with the system operation programming.

Conformity check: Engine stopped and ignition on, or engine running, and engine coolant temperature > 80°C

The atmospheric pressure value must be between:
0.80 bar < PR035 < 1.20 bar.
In the event of a fault, consult the interpretation of fault **DF004 Turbocharging pressure sensor circuit** and **DF200 Atmospheric pressure sensor**.

AFTER REPAIR	Carry out a road test, then check with the **diagnostic tool**.

EDC16CP33_V18_PR035 / EDC16CP33_V1C_PR035 / EDC16CP33_V54_PR035 / EDC16CP33_V20_PR035 / EDC16CP33_V58_PR035 / EDC16CP33_V5C_PR035 / EDC16CP33_V24_PR035 / EDC16CP33_V04_PR035 / EDC16CP33_V08_PR035 / EDC16CP33_V44_PR035 / EDC16CP33_V4C_PR035 / EDC16CP33_V34_PR035 / EDC16CP33_V38_PR035 / EDC16CP33_V74_PR035 / EDC16CP33_V28_PR035 / EDC16CP33_V62_PR035 / EDC16CP33_V26_PR035 / EDC16CP33_V60_PR035

GETtheMANUALS.org

PR037	REFRIGERANT PRESSURE

PARAMETER DEFINITION	This parameter indicates the refrigerant pressure in **bar**.

NOTES	**Special notes:** Only perform these tests if the parameters do not correspond with the system operation programming.

Conformity check with the engine running and engine coolant temperature > 80°C

The value should be higher than **2 bar**.

AFTER REPAIR	Carry out a road test, then check with the **diagnostic tool**.

EDC16CP33_V18_PR037 / EDC16CP33_V1C_PR037 / EDC16CP33_V54_PR037 / EDC16CP33_V20_PR037 / EDC16CP33_V58_PR037 / EDC16CP33_V5C_PR037 / EDC16CP33_V24_PR037 / EDC16CP33_V04_PR037 / EDC16CP33_V08_PR037 / EDC16CP33_V44_PR037 / EDC16CP33_V4C_PR037 / EDC16CP33_V34_PR037 / EDC16CP33_V38_PR037 / EDC16CP33_V74_PR037 / EDC16CP33_V60_PR037 / EDC16CP33_V62_PR037

GETtheMANUALS.org

PR038	RAIL PRESSURE

PARAMETER DEFINITION	This parameter indicates the rail pressure in **bar**.

NOTES	**There must be no present or stored faults.** Perform this fault finding procedure: – after finding an inconsistency in the parameter, – after a customer complaint (starting faults, poor performance, stalling etc.), – after interpretation of command **AC225 Rail pressure regulator**.
	Special notes: Only perform these tests if the parameters do not correspond with the system operation programming.

Conformity check: Engine stopped and ignition on

The rail pressure value is between:
0 bar < PR038 < 90 bar if the coolant temperature **< 30°C.**
In the event of a fault, consult the interpretation of fault **DF007 Rail pressure sensor circuit**.

Conformity check with the engine running and engine coolant temperature > 80°C

The rail pressure value must be between:
250 bar < PR038 < 290 bar (at idle speed),
1680 bar < PR038 < 1720 bar (full load).
In the event of a fault, refer to the interpretation of fault **DF007**.

AFTER REPAIR	Carry out a road test, then check with the **diagnostic tool**.

EDC16CP33_V18_PR038 / EDC16CP33_V1C_PR038 / EDC16CP33_V54_PR038 / EDC16CP33_V20_PR038 / EDC16CP33_V58_PR038 / EDC16CP33_V5C_PR038 / EDC16CP33_V24_PR038 / EDC16CP33_V04_PR038 / EDC16CP33_V08_PR038 / EDC16CP33_V44_PR038 / EDC16CP33_V4C_PR038 / EDC16CP33_V34_PR038 / EDC16CP33_V38_PR038 / EDC16CP33_V74_PR038 / EDC16CP33_V38_PR028 / EDC16CP33_V62_PR038 / EDC16CP33_V26_PR038 / EDC16CP33_V60_PR038

GETtheMANUALS.org

PR038 CONTINUED	

Sensor electrical conformity

Check the condition of the rail pressure sensor connector (see **Wiring Diagram Technical Note, Vehicle, Component code 1032**).
Check the condition of the engine management computer connector (see **Wiring Diagram Technical Note, Vehicle, Component code 120**).
If one of the connectors is faulty and there is a repair procedure (see **Technical Note 6015A, Electrical wiring repair, Wiring: Precautions for repair**), repair the connector, otherwise replace the wiring.
Check the **continuity** and **absence of interference resistance** of the following connections:

- **3LX** between components **120** and **1032**,
- **3LY** between components **120** and **1032**,
- **3LZ** between components **120** and **1032**.

If the connection or connections are faulty and there is a repair procedure (see **Technical Note 6015A, Electrical wiring repair, Wiring: Precautions for repair**), repair the wiring, otherwise replace it.

Check that there are no external diesel leaks from the high pressure fuel circuit.
With the ignition on and the engine stopped for over **1 minute:**
View parameter **PR038 Rail pressure**.
– If the pressure is below **90 bar**, the sensor is in order.
– If the pressure is above **90 bar**, contact the Techline.

AFTER REPAIR	Carry out a road test, then check with the **diagnostic tool**.

GETtheMANUALS.org

PR041	TURBOCHARGING PRESSURE

PARAMETER DEFINITION	This parameter indicates the turbocharging pressure in **bar**.

NOTES	None.

Conformity check with engine stopped and ignition on, or engine running, and engine coolant temperature > 80°C

The turbocharging pressure value must be:
PR041 = PR035 Atmospheric pressure + /- 0.20 bar.
In the event of a fault, consult the interpretation of **DF004 Turbocharging pressure sensor circuit**.

AFTER REPAIR	Carry out a road test, then check with the **diagnostic tool**.

EDC16CP33_V18_PR041 / EDC16CP33_V1C_PR041 / EDC16CP33_V54_PR041 / EDC16CP33_V20_PR041 / EDC16CP33_V58_PR041 / EDC16CP33_V5C_PR041 / EDC16CP33_V24_PR041 / EDC16CP33_V04_PR041 / EDC16CP33_V08_PR041 / EDC16CP33_V44_PR041 / EDC16CP33_V4C_PR041 / EDC16CP33_V34_PR041 / EDC16CP33_V38_PR041 / EDC16CP33_V74_PR041 / EDC16CP33_V28_PR041 / EDC16CP33_V62_PR041 / EDC16CP33_V26_PR041 / EDC16CP33_V60_PR041

GETtheMANUALS.org

PR041 CONTINUED	

Sensor electrical conformity

Check the **continuity** and **absence of interference resistance** of the following connections:
- **3LQ** between components **120** and **1071**,
- **3LP** between components **120** and **1071**,
- **3LN** between components **120** and **1071**.

If the connection or connections are faulty and there is a repair procedure (see **Technical Note 6015A, Electrical wiring repair, Wiring: Precautions for repair**), repair the wiring, otherwise replace it.

Vehicle with the ignition on, and the engine stopped for at least 1 minute:
Compare the values of **PR041 Turbocharging pressure** and **PR035 Atmospheric pressure**.

If the difference between **PR041** and **PR035** is greater than **0.1 bar**,
check the value of **PR035** by comparing it with the reading on a vehicle in the workshop which is correct.

If the value of **PR035** is not correct (difference greater than **0.1 bar** between the 2 vehicles), contact the Techline.

Otherwise (when the value of **PR035** is correct), replace the turbocharger pressure sensor.

If the difference between **PR041** and **PR035** is less than **0.1 bar**.

Start the engine, with the engine idling:
Compare the values of **PR041** and **PR035**.

If the difference between **PR041** and **PR035** is greater than **0.2 bar**.

Check the air inlet circuit:
Apply **Test 4 Turbocharged air inlet circuit check**.
Low and **high pressure** air circuit **sealed** and **not obstructed**: ducts, mounting clamps present and tightened, turbocharging pressure sensor fitted, exchanger, etc.
Check that the damper valve is not jammed closed.
Repair if necessary.

AFTER REPAIR	Carry out a road test, then check with the **diagnostic tool**.

GETtheMANUALS.org

PR042	FILTERED TURBOCHARGING PRESSURE

PARAMETER DEFINITION	This parameter indicates the filtered turbocharging pressure in **bar**.

NOTES	None.

Conformity check with engine stopped and ignition on, or engine running, and engine coolant temperature > 80°C

PR042 corresponds to the average value of **PR041 Turbocharging pressure.**

AFTER REPAIR	Carry out a road test, then check with the **diagnostic tool**.

EDC16CP33_V18_PR042 / EDC16CP33_V1C_PR042 / EDC16CP33_V54_PR042 / EDC16CP33_V20_PR042 / EDC16CP33_V58_PR042 / EDC16CP33_V5C_PR042 / EDC16CP33_V24_PR042 / EDC16CP33_V04_PR042 / EDC16CP33_V08_PR042 / EDC16CP33_V44_PR042 / EDC16CP33_V4C_PR042 / EDC16CP33_V34_PR042 / EDC16CP33_V38_PR042 / EDC16CP33_V74_PR042 / EDC16CP33_V28_PR042 / EDC16CP33_V62_PR042 / EDC16CP33_V26_PR042 / EDC16CP33_V60_PR042

GETtheMANUALS.org

PR048	RAIL PRESSURE REGULATION VALVE OCR*

PARAMETER DEFINITION	This parameter indicates the turbocharger pressure opening cyclic ratio in %.

NOTES	None.

Conformity check: Engine stopped and ignition on

The turbo pressure opening cyclic ratio value must be:
PR048 = 15%
In the event of a fault, consult the interpretation of faults **DF007 Rail pressure sensor circuit** and **DF053 Rail pressure regulation function**.

Conformity check: Engine running, engine coolant temperature > 80°C, without electrical consumers

The turbo pressure opening cyclic ratio value must be between:
35% < PR048 < 45%
In the event of a fault, refer to the interpretation of fault **DF007**.

OCR*: Opening Cyclic Ratio

AFTER REPAIR	Carry out a road test, then check with the **diagnostic tool**.

EDC16CP33_V18_PR048 / EDC16CP33_V1C_PR048 / EDC16CP33_V54_PR048 / EDC16CP33_V20_PR048 / EDC16CP33_V58_PR048 / EDC16CP33_V5C_PR048 / EDC16CP33_V24_PR048 / EDC16CP33_V04_PR048 / EDC16CP33_V08_PR048 / EDC16CP33_V44_PR048 / EDC16CP33_V4C_PR048 / EDC16CP33_V34_PR048 / EDC16CP33_V38_PR048 / EDC16CP33_V74_PR048 / EDC16CP33_V28_PR048 / EDC16CP33_V62_PR048 / EDC16CP33_V26_PR048 / EDC16CP33_V60_PR048

GETtheMANUALS.org

PR051	EGR VALVE POSITION FEEDBACK

PARAMETER DEFINITION	This parameter indicates the opening ratio of the EGR valve in %.

NOTES	**There must be no present or stored faults.** Perform this fault finding procedure: – after finding an inconsistency in the parameter, – after a customer complaint (loss of power, smoke etc.). – after interpretation of command **AC103 EGR by-pass**.
	Use the **Technical Note Wiring Diagram, Laguna II ph2, Vel Satis ph2, Mégane II ph2, Scénic II ph2, Espace IV ph2**.

Conformity check: Engine stopped and ignition on, or engine running, and engine coolant temperature > 80°C

In the event of a fault, see the interpretation of faults **DF209 EGR valve position sensor circuit** and **DF647 EGR valve position regulation.**

Sensor electrical conformity

Check the **continuity** and **absence of interference resistance** of the following connections:
- **3JM** between components **120** and **1460** or **169**,
- **3EL** between components **120** and **1460** or **169**,
- **3GC** between components **120** and **1460** or **169**.

If the connection or connections are faulty and there is a repair procedure (see **Technical Note 6015A, Electrical wiring repair, Wiring: Precautions for repair**), repair the wiring, otherwise replace it.

If the fault is still present, contact the Techline.

AFTER REPAIR	Carry out a road test, then check with the **diagnostic tool**.

EDC16CP33_V18_PR051 / EDC16CP33_V1C_PR051 / EDC16CP33_V54_PR051 / EDC16CP33_V20_PR051 / EDC16CP33_V58_PR051 / EDC16CP33_V5C_PR051 / EDC16CP33_V24_PR051 / EDC16CP33_V04_PR051 / EDC16CP33_V08_PR051 / EDC16CP33_V44_PR051 / EDC16CP33_V4C_PR051 / EDC16CP33_V34_PR051 / EDC16CP33_V38_PR051 / EDC16CP33_V74_PR051 / EDC16CP33_V28_PR051 / EDC16CP33_V62_PR051 / EDC16CP33_V26_PR051 / EDC16CP33_V60_PR051

GETtheMANUALS.org

PR053	SPEED REQUESTED BY HEATING/AIR CONDITIONING

PARAMETER DEFINITION	This parameter indicates the engine's speed of rotation with air conditioning in **rpm**.

NOTES	**Special notes:** Only perform these tests if the parameters do not correspond with the system operation programming. **Note:** Take parameter **PR053** into account only if **PR037 Refrigerant pressure > 12 bar**.

Conformity check: Engine stopped and ignition on

The value of the engine speed with air conditioning must be:
PR053 = 0 rpm (ignition on).

Conformity check with the engine running and engine coolant temperature > 80°C

The speed requested by the air-conditioning is increased and varies around **850 rpm**.

AFTER REPAIR	Carry out a road test, then check with the **diagnostic tool**.

EDC16CP33_V18_PR053 / EDC16CP33_V1C_PR053 / EDC16CP33_V54_PR053 / EDC16CP33_V20_PR053 / EDC16CP33_V58_PR053 / EDC16CP33_V5C_PR053 / EDC16CP33_V24_PR053 / EDC16CP33_V04_PR053 / EDC16CP33_V08_PR053 / EDC16CP33_V44_PR053 / EDC16CP33_V4C_PR053 / EDC16CP33_V34_PR053 / EDC16CP33_V38_PR053 / EDC16CP33_V74_PR053 / EDC16CP33_V28_PR053 / EDC16CP33_V62_PR053 / EDC16CP33_V26_PR053 / EDC16CP33_V60_PR053

GETtheMANUALS.org

PR055	ENGINE SPEED

PARAMETER DEFINITION	This parameter indicates the engine's rotational speed in **rpm**.

NOTES	None.

Conformity check with engine stopped and ignition on.

The value of the engine speed must be:
PR055 = 0 rpm (ignition on).
In the event of a fault, refer to the interpretation of faults **DF195 Camshaft sensor/engine speed consistency**, **DF119 Camshaft sensor signal** and **DF120 Engine speed sensor signal**.

Conformity check with the engine running and engine coolant temperature > 80°C

The value of the engine speed must be between:
750 rpm < PR055 < 850 rpm (with the engine running at idle speed).
In the event of a fault, refer to the interpretation of faults **DF195, DF119** and **DF120**.

AFTER REPAIR	Carry out a road test, then check with the **diagnostic tool**.

EDC16CP33_V18_PR055 / EDC16CP33_V1C_PR055 / EDC16CP33_V54_PR055 / EDC16CP33_V20_PR055 / EDC16CP33_V58_PR055 / EDC16CP33_V5C_PR055 / EDC16CP33_V24_PR055 / EDC16CP33_V04_PR055 / EDC16CP33_V08_PR055 / EDC16CP33_V44_PR055 / EDC16CP33_V4C_PR055 / EDC16CP33_V34_PR055 / EDC16CP33_V38_PR055 / EDC16CP33_V74_PR055 / EDC16CP33_V28_PR055 / EDC16CP33_V62_PR055 / EDC16CP33_V26_PR055 / EDC16CP33_V60_PR055

GETtheMANUALS.org

PR059	INLET AIR TEMPERATURE

PARAMETER DEFINITION	This parameter indicates the air inlet temperature in **°C**.

NOTES	**There must be no present or stored faults.** Perform this fault finding procedure: – after finding an inconsistency in the parameter, – after a customer complaint (e.g. lack of power).
	Use the **Technical Note Wiring Diagram, Laguna II ph2, Vel Satis ph2, Mégane II ph2, Scénic II ph2, Espace IV ph2**.

Conformity check: Engine stopped and ignition on

With the ignition on the inlet air temperature varies according to the exterior temperature.
In the event of a fault, consult the interpretation of fault **DF002 Air temperature sensor circuit**.
Parameter **PR059** ≈ **PR064 Coolant temperature** engine cold.

Conformity check with the engine running and engine coolant temperature > 80°C

With the engine running at idle speed the inlet air temperature varies according to the engine coolant temperature.
In the event of a fault, refer to the interpretation of fault **DF002**.

AFTER REPAIR	Carry out a road test, then check with the **diagnostic tool**.

EDC16CP33_V18_PR059 / EDC16CP33_V1C_PR059 / EDC16CP33_V54_PR059 / EDC16CP33_V20_PR059 / EDC16CP33_V58_PR059 / EDC16CP33_V5C_PR059 / EDC16CP33_V24_PR059 / EDC16CP33_V04_PR059 / EDC16CP33_V08_PR059 / EDC16CP33_V44_PR059 / EDC16CP33_V4C_PR059 / EDC16CP33_V34_PR059 / EDC16CP33_V38_PR059 / EDC16CP33_V74_PR059 / EDC16CP33_V28_PR059 / EDC16CP33_V62_PR059 / EDC16CP33_V26_PR059 / EDC16CP33_V60_PR059

GETtheMANUALS.org

PR059 CONTINUED	

Sensor electrical conformity

With the flow sensor disconnected, check the **insulation** from **earth** of the following connection:
- **3ABQ** between components **120** and **799**.

Check the **+ 12 V after relay supply** of the air flowmeter on the following connection:
- **3FB** of component **799**.

If the connection or connections are faulty and there is a repair procedure (see **Technical Note 6015A, Electrical wiring repair, Wiring: Precautions for repair**), repair the wiring, otherwise replace it.

Measure **the resistance** between the following connections:
- **3ABQ** and **3DW** of component **799**.

If the connection or connections are faulty and there is a repair procedure (see **Technical Note 6015A, Electrical wiring repair, Wiring: Precautions for repair**), repair the wiring, otherwise replace it.
If the resistances of the air flowmeter are not between:

8716 Ω < X < 9689 Ω (at - 10°C),
2353 Ω < X < 2544 Ω (at + 20°C),
794 Ω < X < 839 Ω (at + 50°C),
310 Ω < X < 321 Ω (at + 80°C),
5497 Ω < X < Ω 6050 (at + 0°C),
1613 Ω < X < Ω 1730 (at + 30°C),
569 Ω < X < Ω 598 (at + 60°C),
234 Ω < X < Ω 242 (at + 90°C),
3553 Ω < X < Ω 3875 (at +10°C),
1114 Ω < X < Ω 1186 (at +40°C),
418 Ω < X < Ω 436 (at +70°C),

replace the air flowmeter

AFTER REPAIR	Carry out a road test, then check with the **diagnostic tool**.

GETtheMANUALS.org

PR061	EXTERIOR AIR TEMPERATURE

PARAMETER DEFINITION	This parameter indicates the exterior air temperature in **°C**.

NOTES	None.

Conformity check: Engine stopped and ignition on, or engine running, and engine coolant temperature > 80°C

The exterior air temperature value must be:
PR061 = 20°C (default value).
This parameter is controlled by the UCH and transmitted to the injection on the multiplex network.
In the event of a fault, run fault finding on the UCH (see **87B, Passenger compartment connection unit**).

AFTER REPAIR	Carry out a road test, then check with the **diagnostic tool**.

EDC16CP33_V18_PR061 / EDC16CP33_V1C_PR061 / EDC16CP33_V54_PR061 / EDC16CP33_V20_PR061 / EDC16CP33_V58_PR061 / EDC16CP33_V5C_PR061 / EDC16CP33_V24_PR061 / EDC16CP33_V04_PR061 / EDC16CP33_V08_PR061 / EDC16CP33_V44_PR061 / EDC16CP33_V4C_PR061 / EDC16CP33_V34_PR061 / EDC16CP33_V38_PR061 / EDC16CP33_V74_PR061 / EDC16CP33_V28_PR061 / EDC16CP33_V62_PR061 / EDC16CP33_V26_PR061 / EDC16CP33_V60_PR061

GETtheMANUALS.org

PR063	FUEL TEMPERATURE

PARAMETER DEFINITION	This parameter indicates the fuel temperature in **°C**.

NOTES	**There must be no present or stored faults.** Perform this fault finding procedure: – after finding an inconsistency in the parameter, – after a customer complaint (e.g. lack of power).
	Use the **Technical Note Wiring Diagram, Laguna II ph2, Vel Satis ph2, Mégane II ph2, Scénic II ph2, Espace IV ph2**.

Conformity check: Engine stopped and ignition on, or engine running, and engine coolant temperature > 80°C

The fuel temperature value must be between:
– 30°C < PR063 <90°C
PR063 = 100°C (default value).
In the event of a fault, consult the interpretation of fault **DF098 Fuel temperature sensor circuit**.

AFTER REPAIR	Carry out a road test, then check with the **diagnostic tool**.

EDC16CP33_V18_PR063 / EDC16CP33_V1C_PR063 / EDC16CP33_V54_PR063 / EDC16CP33_V20_PR063 / EDC16CP33_V58_PR063 / EDC16CP33_V5C_PR063 / EDC16CP33_V24_PR063 / EDC16CP33_V04_PR063 / EDC16CP33_V08_PR063 / EDC16CP33_V44_PR063 / EDC16CP33_V4C_PR063 / EDC16CP33_V34_PR063 / EDC16CP33_V38_PR063 / EDC16CP33_V74_PR063 / EDC16CP33_V28_PR063 / EDC16CP33_V62_PR063 / EDC16CP33_V26_PR063 / EDC16CP33_V60_PR063

GETtheMANUALS.org

PR063 CONTINUED	

Sensor electrical conformity

Check the **continuity** and **absence of interference resistance** of the following connections:
- **3FAB** between components **120** and **1066**,
- **3LD** between components **120** and **1066.**

If the connection or connections are faulty and there is a repair procedure (see **Technical Note 6015A, Electrical wiring repair, Wiring: Precautions for repair**), repair the wiring, otherwise replace it.

Measure **the resistance** between the following connections:
- **3FAB** and **3LD** of component **1066**.

If the fuel temperature sensor resistances are not between:
3538 Ω < X < 4502 Ω (at + 10°C),
1950 Ω < X < 2150 Ω (at + 25°C),
763 Ω < X < 857 Ω (at +50°C),
replace the sensor.

AFTER REPAIR	Carry out a road test, then check with the **diagnostic tool**.

GETtheMANUALS.org

PR064	COOLANT TEMPERATURE

PARAMETER DEFINITION	This parameter indicates the engine coolant temperature in **°C**.

NOTES	**There must be no present or stored faults.** Perform this fault finding procedure: – after finding an inconsistency in the parameter, – after a customer complaint (e.g. lack of power).
	Use the **Technical Note Wiring Diagram, Laguna II ph2, Vel Satis ph2, Mégane II ph2, Scénic II ph2, Espace IV ph2**.

Conformity check with engine stopped and ignition on.

With the ignition on the coolant temperature varies according to the exterior temperature.
In the event of a fault, consult the interpretation of fault **DF001 Coolant temperature sensor circuit**.
Parameter **PR059: Inlet air temperature** ≈ **PR064** engine cold.

Conformity check with the engine running and engine coolant temperature > 80°C

With the engine running at idle speed the coolant temperature varies according to the engine temperature.
If there is a fault, refer to the interpretation of fault **DF001**.

AFTER REPAIR	Carry out a road test, then check with the **diagnostic tool**.

GETtheMANUALS.org

PR064 CONTINUED	

Sensor electrical conformity

Check **the continuity** and **absence of interference resistance** of the following connections:
- **3C** between components **120** and **244**,
- **3JK** between components **120** and **244**,

If the connection or connections are faulty and there is a repair procedure (see **Technical Note 6015A, Electrical wiring repair, Wiring: Precautions for repair**), repair the wiring, otherwise replace it.

Measure **the resistance** between the following connections:
- **3C** and **3JK** of component **244**.

If the connection or connections are faulty and there is a repair procedure (see **Technical Note 6015A, Electrical wiring repair, Wiring: Precautions for repair**), repair the wiring, otherwise replace it.
If the temperature sensor resistances are not between:
11332 Ω < X < 13588 Ω (at - 10°C),
2140 Ω < X < 2364 Ω (at + 25°C),
772 Ω < X < 850 Ω (at + 50°C),
275 Ω < X < 291 Ω (at + 80°C),
112 Ω < X < 118 Ω (at + 110°C),
replace the sensor.

AFTER REPAIR	Carry out a road test, then check with the **diagnostic tool**.

GETtheMANUALS.org

PR074	BATTERY VOLTAGE

PARAMETER DEFINITION	This parameter indicates the battery voltage in **volts**.

NOTES	**Special notes:** Only perform these tests if the parameters do not correspond with the system operation programming.

Conformity check: Engine stopped and ignition on, or engine running, and engine coolant temperature > 80°C

The battery voltage value must be between:
8.5 V < PR074 < 15 V.
Test the battery and run fault finding on the charging circuit (see **Technical Note 6014A, Charging circuit check**).

AFTER REPAIR	Carry out a road test, then check with the **diagnostic tool**.

EDC16CP33_V18_PR074 / EDC16CP33_V1C_PR074 / EDC16CP33_V54_PR074 / EDC16CP33_V20_PR074 / EDC16CP33_V58_PR074 / EDC16CP33_V5C_PR074 / EDC16CP33_V24_PR074 / EDC16CP33_V04_PR074 / EDC16CP33_V08_PR074 / EDC16CP33_V44_PR074 / EDC16CP33_V4C_PR074 / EDC16CP33_V34_PR074 / EDC16CP33_V38_PR074 / EDC16CP33_V74_PR074 / EDC16CP33_V28_PR074 / EDC16CP33_V62_PR074 / EDC16CP33_V26_PR074 / EDC16CP33_V60_PR074

GETtheMANUALS.org

PR077	EGR VALVE POSITION SENSOR VOLTAGE

PARAMETER DEFINITION	This parameter indicates the EGR valve position sensor voltage in **volts**.

NOTES	None.

Conformity check: Engine stopped and ignition on

The EGR valve position sensor voltage value must be between:
0 < PR077 < 1.5 V
The default value is: **X = 0 V**
In the event of a fault, refer to the interpretation of fault **DF012 Sensor supply voltage no. 2**.

Engine running, engine coolant temperature > 80°C, with no electrical consumers

The EGR valve position sensor voltage value must be between:
0 V < PR077 < 5 V
The default value is: **X = 0 V**
In the event of a fault, refer to the interpretation of fault **DF012**.

AFTER REPAIR	Carry out a road test, then check with the **diagnostic tool**.

EDC16CP33_V18_PR077 / EDC16CP33_V1C_PR077 / EDC16CP33_V54_PR077 / EDC16CP33_V20_PR077 / EDC16CP33_V58_PR077 / EDC16CP33_V5C_PR077 / EDC16CP33_V24_PR077 / EDC16CP33_V04_PR077 / EDC16CP33_V08_PR077 / EDC16CP33_V44_PR077 / EDC16CP33_V4C_PR077 / EDC16CP33_V34_PR077 / EDC16CP33_V38_PR077 / EDC16CP33_V74_PR077 / EDC16CP33_V28_PR077 / EDC16CP33_V62_PR077 / EDC16CP33_V26_PR077 / EDC16CP33_V60_PR077

GETtheMANUALS.org

PR079	ATMOSPHERIC PRESSURE SENSOR VOLTAGE

PARAMETER DEFINITION	This parameter indicates the atmospheric pressure sensor voltage in **volts**.

NOTES	**Special notes:** Only perform these tests if the parameters do not correspond with the system operation programming.

Conformity check: Engine stopped and ignition on, or engine running, and engine coolant temperature > 80°C

The value of the atmospheric pressure sensor voltage must be between:
0 V < PR079 < 5 V.
In the event of a fault, consult the interpretation of faults **DF011 Sensor supply no. 1 voltage, DF012 Sensor supply no. 2 voltage**, and **DF013 Sensor supply no. 3 voltage**.

AFTER REPAIR	Carry out a road test, then check with the **diagnostic tool**.

EDC16CP33_V18_PR079 / EDC16CP33_V1C_PR079 / EDC16CP33_V54_PR079 / EDC16CP33_V20_PR079 / EDC16CP33_V58_PR079 / EDC16CP33_V5C_PR079 / EDC16CP33_V24_PR079 / EDC16CP33_V04_PR079 / EDC16CP33_V08_PR079 / EDC16CP33_V44_PR079 / EDC16CP33_V4C_PR079 / EDC16CP33_V34_PR079 / EDC16CP33_V38_PR079 / EDC16CP33_V74_PR079 / EDC16CP33_V28_PR079 / EDC16CP33_V62_PR079 / EDC16CP33_V26_PR079 / EDC16CP33_V60_PR079

GETtheMANUALS.org

PR080	RAIL PRESSURE SENSOR VOLTAGE

PARAMETER DEFINITION	This parameter indicates the rail pressure sensor voltage in **volts**.

NOTES	**Special notes:** Only perform these tests if the parameters do not correspond with the system operation programming.

Conformity check: Engine stopped and ignition on, or engine running, and engine coolant temperature > 80°C

The value of the rail position sensor voltage must be between:
0 V <PR080 <5 V.
In the event of a fault, refer to the interpretation of fault **DF013 Sensor feed voltage no. 3**.

AFTER REPAIR	Carry out a road test, then check with the **diagnostic tool**.

EDC16CP33_V18_PR080 / EDC16CP33_V1C_PR080 / EDC16CP33_V54_PR080 / EDC16CP33_V20_PR080 / EDC16CP33_V58_PR080 / EDC16CP33_V5C_PR080 / EDC16CP33_V24_PR080 / EDC16CP33_V04_PR080 / EDC16CP33_V08_PR080 / EDC16CP33_V44_PR080 / EDC16CP33_V4C_PR080 / EDC16CP33_V34_PR080 / EDC16CP33_V38_PR080 / EDC16CP33_V74_PR080 / EDC16CP33_V28_PR080 / EDC16CP33_V62_PR080 / EDC16CP33_V26_PR080 / EDC16CP33_V60_PR080

GETtheMANUALS.org

PR082	FUEL TEMPERATURE SENSOR VOLTAGE

PARAMETER DEFINITION	This parameter indicates the fuel temperature sensor voltage in **volts**.

NOTES	None.

Conformity check: Engine stopped and ignition on, or Engine running and engine coolant temperature > 80°C without electrical consumers

0 V < PR082 < 5 V
In the event of a fault, consult the interpretation of fault **DF098 Fuel temperature sensor circuit**.

AFTER REPAIR	Carry out a road test, then check with the **diagnostic tool**.

EDC16CP33_V18_PR082 / EDC16CP33_V1C_PR082 / EDC16CP33_V54_PR082 / EDC16CP33_V20_PR082 / EDC16CP33_V58_PR082 / EDC16CP33_V5C_PR082 / EDC16CP33_V24_PR082 / EDC16CP33_V04_PR082 / EDC16CP33_V08_PR082 / EDC16CP33_V44_PR082 / EDC16CP33_V4C_PR082 / EDC16CP33_V34_PR082 / EDC16CP33_V38_PR082 / EDC16CP33_V74_PR082 / EDC16CP33_V28_PR082 / EDC16CP33_V62_PR082 / EDC16CP33_V26_PR082 / EDC16CP33_V60_PR082

GETtheMANUALS.org

PR083	AIR TEMPERATURE SENSOR VOLTAGE

PARAMETER DEFINITION	This parameter indicates the air temperature sensor voltage in **volts**.

NOTES	**Special notes:** Only perform these tests if the parameters do not correspond with the system operation programming.

Conformity check: Engine stopped and ignition on, or engine running, and engine coolant temperature > 80°C

The value of the air temperature sensor voltage must be between:
0 V < PR083 < 5 V.
In the event of a fault, consult the interpretation of faults **DF011 Sensor supply voltage no. 1, DF012 Sensor supply voltage no. 2** and **DF013 Sensor supply voltage no. 3**.

AFTER REPAIR	Carry out a road test, then check with the **diagnostic tool**.

EDC16CP33_V18_PR083 / EDC16CP33_V1C_PR083 / EDC16CP33_V54_PR083 / EDC16CP33_V20_PR083 / EDC16CP33_V58_PR083 / EDC16CP33_V5C_PR083 / EDC16CP33_V24_PR083 / EDC16CP33_V04_PR083 / EDC16CP33_V08_PR083 / EDC16CP33_V44_PR083 / EDC16CP33_V4C_PR083 / EDC16CP33_V34_PR083 / EDC16CP33_V38_PR083 / EDC16CP33_V74_PR083 / EDC16CP33_V28_PR083 / EDC16CP33_V62_PR083 / EDC16CP33_V26_PR083 / EDC16CP33_V60_PR083

GETtheMANUALS.org

PR084	COOLANT TEMPERATURE SENSOR VOLTAGE

PARAMETER DEFINITION	This parameter indicates the coolant temperature sensor voltage in **volts**.

NOTES	**Special notes:** Only perform these tests if the parameters do not correspond with the system operation programming.

Conformity check: Engine stopped and ignition on, or engine running, and engine coolant temperature > 80°C

The value of the coolant temperature sensor voltage must be between:
0 V < PR084 < 5 V.
In the event of a fault, refer to the interpretation of **DF001 Coolant temperature sensor circuit**.

AFTER REPAIR	Carry out a road test, then check with the **diagnostic tool**.

EDC16CP33_V18_PR084 / EDC16CP33_V1C_PR084 / EDC16CP33_V54_PR084 / EDC16CP33_V20_PR084 / EDC16CP33_V58_PR084 / EDC16CP33_V5C_PR084 / EDC16CP33_V24_PR084 / EDC16CP33_V04_PR084 / EDC16CP33_V08_PR084 / EDC16CP33_V44_PR084 / EDC16CP33_V4C_PR084 / EDC16CP33_V34_PR084 / EDC16CP33_V38_PR084 / EDC16CP33_V74_PR084 / EDC16CP33_V28_PR084 / EDC16CP33_V62_PR084 / EDC16CP33_V26_PR084 / EDC16CP33_V60_PR084

GETtheMANUALS.org

PR086	PEDAL POTENTIOMETER GANG 1 VOLTAGE

PARAMETER DEFINITION	This parameter indicates the pedal potentiometer gang 1 voltage in **volts**.

NOTES	**Special notes:** Only perform these tests if the parameters do not correspond with the system operation programming.

Conformity check: Engine stopped and ignition on, or engine running, and engine coolant temperature > 80°C

The value of the pedal potentiometer gang 1 voltage must be between:
0.70 V < PR086 < 0.80 V (accelerator pedal released).

IMPORTANT:
This corresponds to normal operation.

AFTER REPAIR	Carry out a road test, then check with the **diagnostic tool**.

EDC16CP33_V18_PR086 / EDC16CP33_V1C_PR086 / EDC16CP33_V54_PR086 / EDC16CP33_V20_PR086 / EDC16CP33_V58_PR086 / EDC16CP33_V5C_PR086 / EDC16CP33_V24_PR086 / EDC16CP33_V04_PR086 / EDC16CP33_V08_PR086 / EDC16CP33_V44_PR086 / EDC16CP33_V4C_PR086 / EDC16CP33_V34_PR086 / EDC16CP33_V38_PR086 / EDC16CP33_V74_PR086 / EDC16CP33_V28_PR086 / EDC16CP33_V62_PR086 / EDC16CP33_V26_PR086 / EDC16CP33_V60_PR086

GETtheMANUALS.org

PR088	PEDAL POTENTIOMETER GANG 2 VOLTAGE

PARAMETER DEFINITION	This parameter indicates the pedal potentiometer gang 2 voltage in **volts**.

NOTES	**Special notes:** Only perform these tests if the parameters do not correspond with the system operation programming.

Conformity check: Engine stopped and ignition on, or engine running, and engine coolant temperature > 80°C

The value of the pedal potentiometer gang 2 voltage must be between:
0.30 V < PR088 < 0.40 V (accelerator pedal released).

IMPORTANT:
This corresponds to normal operation.

AFTER REPAIR	Carry out a road test, then check with the **diagnostic tool**.

EDC16CP33_V18_PR088 / EDC16CP33_V1C_PR088 / EDC16CP33_V54_PR088 / EDC16CP33_V20_PR088 / EDC16CP33_V58_PR088 / EDC16CP33_V5C_PR088 / EDC16CP33_V24_PR088 / EDC16CP33_V04_PR088 / EDC16CP33_V08_PR088 / EDC16CP33_V44_PR088 / EDC16CP33_V4C_PR088 / EDC16CP33_V34_PR088 / EDC16CP33_V38_PR088 / EDC16CP33_V74_PR088 / EDC16CP33_V28_PR088 / EDC16CP33_V62_PR088 / EDC16CP33_V26_PR088/ EDC16CP33_V60_PR088

GETtheMANUALS.org

PR089	VEHICLE SPEED

PARAMETER DEFINITION	Gives the vehicle speed in **km/h**.

NOTES	**Special notes:** Only perform these tests if the parameters do not correspond with the system operation programming.
	This parameter is transmitted by the ABS computer. This signal is transmitted to the injection on the multiplex network.

Conformity check: Engine stopped and ignition on, or engine running, and engine coolant temperature > 80°C

In the event of a fault, test the multiplex network (see **88B, Multiplex**).
And then complete fault finding on the ABS computer (see **38C, Anti-lock braking system**).

AFTER REPAIR	Carry out a road test, then check with the **diagnostic tool**.

EDC16CP33_V18_PR089 / EDC16CP33_V1C_PR089 / EDC16CP33_V54_PR089 / EDC16CP33_V20_PR089 / EDC16CP33_V58_PR089 / EDC16CP33_V5C_PR089 / EDC16CP33_V24_PR089 / EDC16CP33_V04_PR089 / EDC16CP33_V08_PR089 / EDC16CP33_V44_PR089 / EDC16CP33_V4C_PR089 / EDC16CP33_V34_PR089 / EDC16CP33_V38_PR089 / EDC16CP33_V74_PR089 / EDC16CP33_V28_PR089 / EDC16CP33_V62_PR089 / EDC16CP33_V26_PR089 / EDC16CP33_V60_PR089

GETtheMANUALS.org

PR104	TURBOCHARGING SV* OCR* SETPOINT

PARAMETER DEFINITION	This parameter indicates the turbocharging solenoid valve opening ratio percentage.

NOTES	None.

Conformity check: Engine stopped and ignition on, or engine running, and engine coolant temperature > 80°C

PR104 ≈ **PR846 TURBOCHARGING SOLENOID VALVE OCR**, these 2 values must be similar.
In the event of a fault, consult the interpretation of fault **DF054 EGR valve position sensor circuit**.

OCR*: Opening Cyclic Ratio
SV*: Solenoid valve

AFTER REPAIR	Carry out a road test, then check with the **diagnostic tool**.

EDC16CP33_V18_PR104 / EDC16CP33_V1C_PR104 / EDC16CP33_V54_PR104 / EDC16CP33_V20_PR104 / EDC16CP33_V58_PR104 / EDC16CP33_V5C_PR104 / EDC16CP33_V24_PR104 / EDC16CP33_V04_PR104 / EDC16CP33_V08_PR104 / EDC16CP33_V44_PR104 / EDC16CP33_V4C_PR104 / EDC16CP33_V34_PR104 / EDC16CP33_V38_PR104 / EDC16CP33_V74_PR104 / EDC16CP33_V28_PR104 / EDC16CP33_V62_PR104 / EDC16CP33_V26_PR104 / EDC16CP33_V60_PR104

GETtheMANUALS.org

PR128	FIRST EGR VALVE OFFSET

PARAMETER DEFINITION	This parameter indicates the closing ratio of the EGR valve for the first offset of the EGR valve.

NOTES	None.

Conformity check with engine stopped and ignition on, or engine running, and engine coolant temperature > 80°C

The EGR valve closure value during the first EGR valve offset must be between:
15% < PR128 < 25%.
PR128 ≈ PR129 Last EGR valve offset, these 2 values should be similar.
In the event of a fault, see the interpretation of faults **DF209 EGR valve position sensor circuit** and **DF647 EGR valve position regulation.**

AFTER REPAIR	Carry out a road test, then check with the **diagnostic tool**.

EDC16CP33_V18_PR128 / EDC16CP33_V1C_PR128 / EDC16CP33_V54_PR128 / EDC16CP33_V20_PR128 / EDC16CP33_V58_PR128 / EDC16CP33_V5C_PR128 / EDC16CP33_V24_PR128 / EDC16CP33_V04_PR128 / EDC16CP33_V08_PR128 / EDC16CP33_V44_PR128 / EDC16CP33_V4C_PR128 / EDC16CP33_V34_PR128 / EDC16CP33_V38_PR128 / EDC16CP33_V74_PR128 / EDC16CP33_V28_PR128 / EDC16CP33_V62_PR128 / EDC16CP33_V26_PR128 / EDC16CP33_V60_PR128

GETtheMANUALS.org

PR129	LAST EGR VALVE OFFSET

PARAMETER DEFINITION	This parameter indicates the closing ratio of the EGR valve for the first EGR valve offset.

NOTES	None.

Conformity check with engine stopped and ignition on, or engine running, and engine coolant temperature > 80°C

The EGR valve closure value during the last EGR valve offset must be between:
15% < PR129 < 25%.
PR128 First EGR valve offset ≈ **PR129**, these 2 values should be similar.
In the event of a fault, consult the interpretation of faults **DF209 EGR valve position sensor circuit** and **DF647 EGR valve position regulation.**

AFTER REPAIR	Carry out a road test, then check with the **diagnostic tool**.

EDC16CP33_V18_PR129 / EDC16CP33_V1C_PR129 / EDC16CP33_V54_PR129 / EDC16CP33_V20_PR129 / EDC16CP33_V58_PR129 / EDC16CP33_V5C_PR129 / EDC16CP33_V24_PR129 / EDC16CP33_V04_PR129 / EDC16CP33_V08_PR129 / EDC16CP33_V44_PR129 / EDC16CP33_V4C_PR129 / EDC16CP33_V34_PR129 / EDC16CP33_V38_PR129 / EDC16CP33_V74_PR129 / EDC16CP33_V28_PR129 / EDC16CP33_V62_PR129 / EDC16CP33_V26_PR129 / EDC16CP33_V60_PR129

GETtheMANUALS.org

PR130	CRUISE CONTROL SETPOINT

PARAMETER DEFINITION	This parameter indicates the cruise control speed setpoint in **mph (km/h)**.

NOTES	**Special notes:** Only perform these tests if the parameters do not correspond with the system operation programming.
	There must be no faults present. Perform this fault finding procedure: – after finding an inconsistency in the parameter, – or after a customer complaint (lack of power, smoke etc.).

Conformity check: Engine stopped and ignition on, or engine running, and engine coolant temperature > 80°C

The cruise control speed setpoint closure value must be:
PR130 > 18 mph (30 km/h).

Cruise control can only be activated for a speed.

AFTER REPAIR	Carry out a road test, then check with the **diagnostic tool**.

EDC16CP33_V18_PR130 / EDC16CP33_V1C_PR130 / EDC16CP33_V54_PR130 / EDC16CP33_V20_PR130 / EDC16CP33_V58_PR130 / EDC16CP33_V5C_PR130 / EDC16CP33_V24_PR130 / EDC16CP33_V04_PR130 / EDC16CP33_V08_PR130 / EDC16CP33_V44_PR130 / EDC16CP33_V4C_PR130 / EDC16CP33_V34_PR130 / EDC16CP33_V38_PR130 / EDC16CP33_V74_PR130 / EDC16CP33_V28_PR130 / EDC16CP33_V62_PR130 / EDC16CP33_V26_PR130 / EDC16CP33_V60_PR130

GETtheMANUALS.org

PR132	AIR FLOW

PARAMETER DEFINITION	This parameter indicates the inlet air flow in **kg/h**.

NOTES	**There must be no faults present.** Perform this fault finding procedure: – after finding an inconsistency in the parameter, – or after a customer complaint (lack of power, smoke etc.).
	Use the **Technical Note Wiring Diagram, Laguna II ph2, Vel Satis ph2, Mégane II ph2, Scénic II ph2, Espace IV ph2**.

Conformity check with engine stopped and ignition on.

The inlet air flow value must be:
PR132 = 0 kg/h.

Conformity check with the engine running and engine coolant temperature > 80°C

The inlet air flow value must be between:
20 kg/h < PR132 < 30 kg/h.

AFTER REPAIR	Carry out a road test, then check with the **diagnostic tool**.

GETtheMANUALS.org

PR132 CONTINUED	

Sensor electrical conformity

Check the air inlet circuit (from the air filter inlet to the inlet manifold,
apply **Test 4 Turbocharged air inlet circuit check**):
– air filter unit inlet not blocked and filter not clogged,
– **visual** inspection only, **apply Test 4** of **ALP 2 Starting fault or starting impossible**,
– oil vapour recirculation circuit connection conformity.
– **absence of leaks** or **blockages** in the **low** and **high pressure** air circuits: pipes, presence and tightness of the mounting clips, mounting of the turbocharger pressure sensor, intercooler, etc.
– check that the damper valve is not jammed closed.
Carry out the necessary repairs.

Check the **electrical conformity of the air flowmeter**:
Check the **+ 5 V supply** of the air flowmeter on the following connection:
• **3KJ** of component **799**.
Check the **+ 12 V after relay supply** of the air flowmeter on the following connection:
• **3FB** of component **799**.
Check **the continuity** and **absence of interference resistance** of the following connections:
• **3DV** between components **120** and **799**,
• **3DW** between components **120** and **799**.
If the connection or connections are faulty and there is a repair procedure (see **Technical Note 6015A, Electrical wiring repair, Wiring: Precautions for repair**), repair the wiring, otherwise replace it.

With the flowmeter connected, the vehicle **ignition on**, and the engine stopped:
Check the voltage between connections **3DW** and **3DV** of component **799**.
If the air flow sensor voltage is not between **0.3 V < X < 0.7 V**, replace the sensor.

AFTER REPAIR	Carry out a road test, then check with the **diagnostic tool**.

GETtheMANUALS.org

PR157	FUEL FLOW SETPOINT

PARAMETER DEFINITION	This parameter indicates the fuel flow setpoint in **mg/st**.

NOTES	**Special notes:** Only perform these tests if the parameters do not correspond with the system operation programming.

Conformity check: Engine stopped and ignition on

The fuel flow setpoint value must be:
PR157 = 0 mg/st (ignition on).
In the event of a fault, consult the interpretation of **DF897 Pump pressure regulator circuit**.

Conformity check with the engine running and engine coolant temperature > 80°C

Engine running: PR017: Fuel flow = PR157.
In the event of a fault, refer to the interpretation of fault **DF897**.

AFTER REPAIR	Carry out a road test, then check with the **diagnostic tool**.

GETtheMANUALS.org

PR171	AIR FLOW SETPOINT FOR EGR

PARAMETER DEFINITION	This parameter indicates the fuel flow setpoint in **mg/st**.

NOTES	**Special notes:** Only perform these tests if the parameters do not correspond with the system operation programming.

Conformity check: Engine stopped and ignition on, or engine running, and engine coolant temperature > 80°C

Indicates the air flow required by the EGR valve

AFTER REPAIR	Carry out a road test, then check with the **diagnostic tool**.

GETtheMANUALS.org

PR190	IDLE SPEED SETPOINT

PARAMETER DEFINITION	This parameter indicates the engine's rotational speed in **rpm**.

NOTES	None.

Conformity check with engine stopped and ignition on.

With the ignition on, the engine speed value must be:
PR190 = 800 rpm or **PR190 = 850 rpm (depending on the vehicle)**.
In the event of a fault, refer to the interpretation of faults **DF195 Camshaft sensor / engine speed consistency**, **DF119 Camshaft sensor signal** and **DF120 Engine speed sensor signal**.

Conformity check with the engine running and engine coolant temperature > 80°C

With the engine running at idle speed, the engine speed value must be:
PR190 = 800 rpm or **PR190 = 850 rpm (depending on the vehicle)**.
In the event of a fault, refer to the interpretation of faults **DF195, DF119** and **DF120**.
The difference between the engine idle speed and its setpoint must be less than **50 rpm**.

AFTER REPAIR	Carry out a road test, then check with the **diagnostic tool**.

GETtheMANUALS.org

PR209	TURBOCHARGING PRESSURE LOOP DIFFERENCE

PARAMETER DEFINITION	This parameter indicates the turbocharging pressure loop difference in **bar**.

NOTES	None.

Conformity check: Engine running, engine coolant temperature > 80°C, without electrical consumers.

The turbocharging pressure loop difference value must be:
PR209 = PR009 Turbocharging pressure setpoint - PR041 Turbocharging pressure = ~ 0.
If **PR209** is significant, refer to the interpretation of the command **AC004 Turbocharging solenoid valve**.

AFTER REPAIR	Carry out a road test, then check with the **diagnostic tool**.

GETtheMANUALS.org

PR213	RAIL PRESSURE LOOP DIFFERENCE

PARAMETER DEFINITION	This parameter indicates the rail pressure loop difference in **bar**.

NOTES	**Special notes:** Only perform these tests if the parameters do not correspond with the system operation programming.

Conformity check: Engine stopped and ignition on, or engine running, and engine coolant temperature > 80°C

The rail pressure loop difference value must be:
PR213 = PR008 Rail pressure setpoints - PR038 Rail pressure.
In the event of a fault, consult the interpretation of fault **DF007 Rail pressure sensor circuit**.

AFTER REPAIR	Carry out a road test, then check with the **diagnostic tool**.

GETtheMANUALS.org

PR224	TURBOCHARGING PRESSURE SENSOR VOLTAGE

PARAMETER DEFINITION	This parameter indicates the turbocharging pressure sensor voltage in **volts**.

NOTES	**Special notes:** Only perform these tests if the parameters do not correspond with the system operation programming.

Conformity check: Engine stopped and ignition on, or engine running, and engine coolant temperature > 80°C

The turbocharger sensor voltage value must be between:
0 V < PR224 < 5 V.
In the event of a fault, consult the interpretation of faults **DF011 Sensor supply voltage no. 1**, **DF012 Sensor supply voltage no. 2** and **DF013 Sensor supply voltage no. 3**.

AFTER REPAIR	Carry out a road test, then check with the **diagnostic tool**.

GETtheMANUALS.org

PR225	AIR FLOW SENSOR VOLTAGE

PARAMETER DEFINITION	This parameter indicates the air flow sensor voltage in **volts**.

NOTES	**Special notes:** Only perform these tests if the parameters do not correspond with the system operation programming.
	There must be no faults present. Perform this fault finding procedure: – after finding an inconsistency in the parameter, – or after a customer complaint (lack of power, smoke etc.).

Conformity check: Engine stopped and ignition on, or engine running, and engine coolant temperature > 80°C

The air flow sensor voltage value must be between:
0 V < PR225 < 5 V.
In the event of a fault, consult the interpretation of parameter **DF056 Air flow sensor circuit**.

AFTER REPAIR	Carry out a road test, then check with the **diagnostic tool**.

GETtheMANUALS.org

PR290	AC REFRIGERANT PRESSURE SENSOR VOLTAGE

PARAMETER DEFINITION	This parameter indicates the refrigerant pressure sensor voltage in **volts**.

NOTES	None.

Conformity check with engine stopped and ignition on, or engine running, and engine coolant temperature > 80°C

The refrigerant pressure sensor voltage value must be between:
0 V ≤ **PR290** ≤ **5 V**.
Carry out fault finding on the climate control computer (see **62B, Climate control**).

AFTER REPAIR	Carry out a road test, then check with the **diagnostic tool**.

GETtheMANUALS.org

PR364	CYLINDER NO. 1 FUEL FLOW CORRECTION

PARAMETER DEFINITION	This parameter indicates the cylinder's fuel flow correction in **mg/st**.

NOTES	**Special notes:** Only perform these tests if the parameters do not correspond with the system operation programming.

Conformity check: Engine stopped and ignition on

The cylinder no. 1 fuel flow correction value must be:
PR364 = 0.0 mg/st.
In the event of a fault, consult **Test 10 Poor injector operation**.

Conformity check with the engine running and engine coolant temperature > 80°C

The cylinder no. 1 fuel flow correction value must be between:
- 6 mg/st < PR364 < 6 mg/st.
In the event of a fault, consult **Test 10 Poor injector operation**.

AFTER REPAIR	Carry out a road test, then check with the **diagnostic tool**.

GETtheMANUALS.org

PR365	CYLINDER NO. 4 FUEL FLOW CORRECTION

PARAMETER DEFINITION	This parameter indicates the cylinder's fuel flow correction in **mg/st**.

NOTES	**Special notes:** Only perform these tests if the parameters do not correspond with the system operation programming.

Conformity check: Engine stopped and ignition on

The cylinder fuel flow correction value must be:
PR365 = 0.0 mg/st.
In the event of a fault, consult **Test 10 Poor injector operation**.

Conformity check with the engine running and engine coolant temperature > 80°C

The cylinder fuel flow correction value must be between:
- 6 mg/st < PR365 < 6 mg/st.
In the event of a fault, consult **Test 10**.

AFTER REPAIR	Carry out a road test, then check with the **diagnostic tool**.

GETtheMANUALS.org

PR381	PARTICLE FILTER DOWNSTREAM TEMPERATURE

PARAMETER DEFINITION	This parameter indicates the particle filter downstream temperature in **°C**.

NOTES	None.

Conformity check with engine stopped and ignition on, or engine running, and engine coolant temperature > 80°C

Indicates the **particle filter** downstream air temperature in **°C**.
PR381 ≈ PR382 Particle filter upstream temperature ≈ ± 200°C

In the event of a fault, consult the interpretation of faults **DF309 Particle filter downstream temperature sensor** and **DF310 Particle filter upstream temperature sensor**.

AFTER REPAIR	Carry out a road test, then check with the **diagnostic tool**.

GETtheMANUALS.org

PR382	PARTICLE FILTER UPSTREAM TEMPERATURE

PARAMETER DEFINITION	This parameter indicates the air temperature of the exhaust gas upstream of the particle filter in **°C**.

NOTES	None.

Conformity check with engine stopped and ignition on, or engine running, and engine coolant temperature > 80°C

The value of the air temperature of the exhaust gas upstream of the particle filter must be:
PR382 ≈ 200°C

In the event of a fault, consult the interpretation of faults **DF309 Particle filter downstream temperature sensor** and **DF310 Particle filter upstream temperature sensor**.

AFTER REPAIR	Carry out a road test, then check with the **diagnostic tool**.

GETtheMANUALS.org

PR383	WEIGHT OF SOOT IN PARTICLE FILTER

PARAMETER DEFINITION	This parameter indicates the weight of soot in the particle filter in **g**.

NOTES	None.

Conformity check with engine stopped and ignition on, or engine running, and engine coolant temperature > 80°C

The value of the weight of soot in the particle filter must be:
PR383 < 56 g.

If the weight is greater than 56 g:
For all Vdiags (except 18): carry out an After-Sales regeneration. Run command **SC017 Particle filter regeneration** and follow the procedure (see **Interpretation of commands**).

For Vdiag 18:
Reprogram the computer in **Vdiag 1C**.
Then apply the procedure corresponding to **Vdiag 1C**.
In the event of a fault, refer to the interpretation of fault **DF315 Particle filter diff* pressure sensor**.

diff.*: differential

AFTER REPAIR	Carry out a road test, then check with the **diagnostic tool**.

GETtheMANUALS.org

PR385	EXHAUST SYSTEM FLOW

PARAMETER DEFINITION	This parameter indicates the exhaust pipe flow in **m^3/h**.

NOTES	None.

Conformity check with engine stopped and ignition on.

When stationary, the exhaust pipe flow value must be:
PR385 = 0 m^3/h.

Conformity check with the engine running and engine coolant temperature > 80°C

The exhaust pipe flow value must be between:
20 m^3/h < PR385 < 80 m^3/h.

AFTER REPAIR	Carry out a road test, then check with the **diagnostic tool**.

EDC16CP33_V18_PR385 / EDC16CP33_V1C_PR385 / EDC16CP33_V54_PR385 / EDC16CP33_V20_PR385 / EDC16CP33_V58_PR385 / EDC16CP33_V5C_PR385 / EDC16CP33_V24_PR385 / EDC16CP33_V28_PR385 / EDC16CP33_V62_PR385 / EDC16CP33_V26_PR385 / EDC16CP33_V60_PR385

GETtheMANUALS.org

PR391	DISTANCE SINCE PARTICLE FILTER REPL*

PARAMETER DEFINITION	This parameter indicates the distance since the particle filter was last replaced in **miles (km)**.

NOTES	None.

Conformity check with engine stopped and ignition on, or engine running, and engine coolant temperature > 80°C

Indicates the mileage travelled since replacement of the particle filter.

REPL*: REPLACEMENT

AFTER REPAIR	Carry out a road test, then check with the **diagnostic tool**.

GETtheMANUALS.org

PR405	CYLINDER NO. 2 FUEL FLOW CORRECTION

PARAMETER DEFINITION	This parameter indicates the cylinder's fuel flow correction in **mg/st**.

NOTES	None.

Conformity check with engine stopped and ignition on.

The cylinder fuel flow correction value must be:
PR405 = 0.0 mg/st.
In the event of a fault, consult **Test 10 Poor injector operation**.

Conformity check with the engine running and engine coolant temperature > 80°C

The cylinder fuel flow correction value must be between:
- 6 mg/st < PR405 < 6 mg/st.
In the event of a fault, consult **Test 10**.

AFTER REPAIR	Carry out a road test, then check with the **diagnostic tool**.

GETtheMANUALS.org

PR406	CYLINDER NO. 3 FUEL FLOW CORRECTION

PARAMETER DEFINITION	This parameter indicates the cylinder's fuel flow correction in **mg/st**.

NOTES	None.

Conformity check with engine stopped and ignition on.

The cylinder fuel flow correction value must be:
PR406 = 0.0 mg/st.
In the event of a fault, consult **Test 10 Poor injector operation**.

Conformity check with the engine running and engine coolant temperature > 80°C

The cylinder fuel flow correction value must be between:
– 6 mg/st < PR406 < 6 mg/st.
In the event of a fault, consult **Test 10**.

AFTER REPAIR	Carry out a road test, then check with the **diagnostic tool**.

GETtheMANUALS.org

PR412	DISTANCE AT LAST SUCCESSFUL REGENERATION

PARAMETER DEFINITION	This parameter indicates the distance at the last successful regeneration in **miles (km)**.

NOTES	None.

Conformity check with engine stopped and ignition on, or engine running, and engine coolant temperature > 80°C

This parameter indicates the vehicle's mileage at the last successful regeneration.

AFTER REPAIR	Carry out a road test, then check with the **diagnostic tool**.

GETtheMANUALS.org

PR414	PARTICLE FILTER DIFF* PRESSURE

PARAMETER DEFINITION	This parameter indicates the particle filter differential pressure in **mbar**.

NOTES	None.

Conformity check: Engine stopped and ignition on

The value of the particle filter differential pressure must be between:
- 1 mbar < PR414 < 1 mbar

In the event of a fault, refer to the interpretation of fault **DF315 Particle filter diff* pressure sensor**.

Conformity check with the engine running and engine coolant temperature > 80°C

The value of the particle filter differential pressure must be between:
10 mbar < PR414 < 100 mbar

In the event of a fault, refer to the interpretation of fault **DF315**.

diff.*: differential

AFTER REPAIR	Carry out a road test, then check with the **diagnostic tool**.

GETtheMANUALS.org

PR415	TIME SINCE LAST REGENERATION

PARAMETER DEFINITION	This parameter indicates the time since the last regeneration in **hours**.

NOTES	None.

Conformity check with engine stopped and ignition on, or engine running, and engine coolant temperature > 80°C

Time counter since last regeneration in hours.

AFTER REPAIR	Carry out a road test, then check with the **diagnostic tool**.

GETtheMANUALS.org

PR484	FUEL REGULATION SOLENOID VALVE OCR*

PARAMETER DEFINITION	This parameter indicates the solenoid valve opening ratio as a %.

Conformity check with engine stopped and ignition on.

The value of the solenoid valve opening ratio must be:
PR484 = 0%.
In the event of a fault, consult the interpretation of **DF897 Pump pressure regulator circuit**.

Conformity check: Engine running, engine coolant temperature > 80°C

The solenoid valve opening value must be between:
30% < PR484 < 40%.
In the event of a fault, refer to the interpretation of fault **DF897**.

OCR*: Opening Cyclic Ratio

AFTER REPAIR	Carry out a road test, then check with the **diagnostic tool**.

GETtheMANUALS.org

PR490	ENGINE AIR FLOW

PARAMETER DEFINITION	This parameter indicates the air flow entering the engine in **mg/st**.

NOTES	None.

Conformity check: Engine stopped and ignition on

The inlet air flow value must be:
PR490 = 0 mg/st.

Conformity check with the engine running and engine coolant temperature > 80°C

The inlet air flow value must be:
PR490 ± 500 mg/st.

AFTER REPAIR	Carry out a road test, then check with the **diagnostic tool**.

GETtheMANUALS.org

PR667	TURBINE UPSTREAM TEMPERATURE

PARAMETER DEFINITION	This parameter indicates the turbine upstream temperature in **°C**.

NOTES	None.

Conformity check: Engine stopped and ignition on, or Engine running and engine coolant temperature > 80°C

The value of the turbine upstream air temperature must be:
PR667 ≈ 200°C.

In the event of a fault, refer to the interpretation of fault **DF652 Turbine upstream temperature sensor circuit**.

AFTER REPAIR	Carry out a road test, then check with the **diagnostic tool**.

GETtheMANUALS.org

PR668	TURBINE UPSTREAM TEMPERATURE SENSOR VOLTAGE

PARAMETER DEFINITION	This parameter indicates the turbine upstream temperature sensor voltage in **volts**.

NOTES	None.

Conformity check with engine stopped and ignition on, or engine running, and engine coolant temperature > 80°C

The turbine upstream temperature sensor voltage value must be between:
PR668 ≈ 5 V.

In the event of a fault, consult the interpretation of fault **DF652 Turbine upstream temperature sensor circuit**.

AFTER REPAIR	Carry out a road test, then check with the **diagnostic tool**.

GETtheMANUALS.org

PR672	DAMPER VALVE POSITION SETPOINT

PARAMETER DEFINITION	This parameter indicates the damper valve position setpoint as a %.

NOTES	None.

Conformity check: Engine stopped and ignition on, or Engine running and engine coolant temperature > 80°C without electrical consumers

The value of the damper valve position must be:
PR672 < 5%.
In the event of a fault, consult the interpretation for fault **DF323 Damper valve.**

AFTER REPAIR	Carry out a road test, then check with the **diagnostic tool**.

GETtheMANUALS.org

PR739	FUEL FLOW SOLENOID VALVE CURRENT

PARAMETER DEFINITION	This parameter indicates the current absorbed by the fuel flow solenoid valve in **mA**.

Conformity check with engine stopped and ignition on.

The value of the current absorbed by the fuel flow solenoid valve must be:
PR739 ≈ 200 mA.
In the event of a fault, consult the interpretation of **DF897 Pump pressure regulator circuit**.

Conformity check with the engine running and engine coolant temperature > 80°C

The value of the current absorbed by the fuel flow solenoid valve must be:
PR739 ≈ 300 mA.
In the event of a fault, refer to the interpretation of fault **DF897**.

AFTER REPAIR	Carry out a road test, then check with the **diagnostic tool**.

GETtheMANUALS.org

PR747	DAMPER VALVE POSITION

PARAMETER DEFINITION	This parameter indicates the damper valve position as a %.

NOTES	None.

Conformity check with engine stopped and ignition on.

The value of the damper valve position must be:
PR747 = 0% (with the engine stopped),
PR747 ≈ 5% (with the ignition on).
In the event of a fault, consult the interpretation of faults **DF645 Damper valve position regulation, DF646 Damper valve position sensor** and **DF323 Damper valve**.

Conformity check with the engine running and engine coolant temperature > 80°C

The value of the damper valve position must be:
PR747 ≈ 5% (at idle speed).
In the event of a fault, refer to the interpretation of **faults DF645, DF646** and **DF323**.

AFTER REPAIR	Carry out a road test, then check with the **diagnostic tool**.

GETtheMANUALS.org

PR782	TURBINE UPSTREAM PRESSURE SENSOR VOLTAGE

PARAMETER DEFINITION	This parameter indicates the turbine upstream pressure sensor voltage in **volts**.

NOTES	**Special notes:** Only perform these tests if the parameters do not correspond with the system operation programming.

Conformity check: Engine stopped and ignition on, or engine running, and engine coolant temperature > 80°C

The turbine upstream pressure sensor voltage value must be between:
PR782 ≈ 5 V.
In the event of a fault consult the interpretation of fault **DF651 Turbine upstream pressure sensor circuit**.

AFTER REPAIR	Carry out a road test, then check with the **diagnostic tool**.

GETtheMANUALS.org

PR784	DF312 RECORD No. 1
PR785	DF312 RECORD No. 2
PR786	DF312 RECORD No. 3
PR787	DF312 RECORD No. 4
PR788	DF312 RECORD No. 5
PR789	DF312 RECORD No. 6
PR790	DF312 RECORD No. 7
PR791	DF312 RECORD No. 8
PR792	DF312 RECORD No. 9
PR793	DF312 RECORD No. 10

PARAMETER DEFINITION	These parameters are shown in **miles (km)**.

NOTES	**Special notes:** These parameters must only be interpreted for **DF312 Speed request** if it is **present** or **stored**.

Conformity check with engine stopped and ignition on, or engine running, and engine coolant temperature > 80°C

In the event of a fault, refer to the interpretation of fault **DF312**.

AFTER REPAIR	Carry out a road test, then check with the **diagnostic tool**.

EDC16CP33_V18_PR784 / EDC16CP33_V18_PR785 / EDC16CP33_V18_PR786 / EDC16CP33_V18_PR787 / EDC16CP33_V18_PR788 / EDC16CP33_V18_PR789 / EDC16CP33_V18_PR790 / EDC16CP33_V18_PR791 / EDC16CP33_V18_PR792 / EDC16CP33_V18_PR793 / EDC16CP33_V1C_PR784 / EDC16CP33_V1C_PR785 / EDC16CP33_V1C_PR786 / EDC16CP33_V1C_PR787 / EDC16CP33_V1C_PR788 / EDC16CP33_V1C_PR789 / EDC16CP33_V1C_PR790 / EDC16CP33_V1C_PR791 / EDC16CP33_V1C_PR792 / EDC16CP33_V1C_PR793 / EDC16CP33_V54_PR784 / EDC16CP33_V54_PR785 / EDC16CP33_V54_PR786 / EDC16CP33_V54_PR787 / EDC16CP33_V54_PR788 / EDC16CP33_V54_PR789 / EDC16CP33_V54_PR790 / EDC16CP33_V54_PR791 / EDC16CP33_V54_PR792 / EDC16CP33_V54_PR793 / EDC16CP33_V20_PR784 / EDC16CP33_V58_PR785 / EDC16CP33_V20_PR786 / EDC16CP33_V20_PR787 / EDC16CP33_V20_PR788 / EDC16CP33_V20_PR789 / EDC16CP33_V20_PR790 / EDC16CP33_V20_PR791 / EDC16CP33_V20_PR792 / EDC16CP33_V20_PR793 / EDC16CP33_V58_PR784 / EDC16CP33_V58_PR785 / EDC16CP33_V58_PR786 / EDC16CP33_V58_PR787 / EDC16CP33_V58_PR788 / EDC16CP33_V58_PR789 / EDC16CP33_V58_PR790 / EDC16CP33_V58_PR791 / EDC16CP33_V58_PR792 / EDC16CP33_V58_PR793 / EDC16CP33_V5C_PR784 / EDC16CP33_V5C_PR785 / EDC16CP33_V5C_PR786 / EDC16CP33_V5C_PR787 / EDC16CP33_V5C_PR788 / EDC16CP33_V5C_PR789 / EDC16CP33_V5C_PR790 / EDC16CP33_V5C_PR791 / EDC16CP33_V5C_PR792 / EDC16CP33_V5C_PR793 / EDC16CP33_V24_PR784 / EDC16CP33_V24_PR785 / EDC16CP33_V24_PR786 / EDC16CP33_V24_PR787 / EDC16CP33_V24_PR788 / EDC16CP33_V24_PR789 / EDC16CP33_V24_PR790 / EDC16CP33_V24_PR791 / EDC16CP33_V24_PR792 / EDC16CP33_V24_PR793 / EDC16CP33_V26_PR784 / EDC16CP33_V26_PR785 / EDC16CP33_V26_PR786 / EDC16CP33_V26_PR787 / EDC16CP33_V26_PR788 / EDC16CP33_V26_PR789 / EDC16CP33_V26_PR790 / EDC16CP33_V26_PR791 / EDC16CP33_V26_PR792 / EDC16CP33_V26_PR793 / EDC16CP33_V60_PR784 / EDC16CP33_V60_PR785 / EDC16CP33_V60_PR786 / EDC16CP33_V60_PR787 / EDC16CP33_V60_PR788 / EDC16CP33_V60_PR789 / EDC16CP33_V60_PR790 / EDC16CP33_V60_PR791 / EDC16CP33_V60_PR792 / EDC16CP33_V60_PR793

GETtheMANUALS.org

PR784 **PR785** **PR786** **PR787** **PR788** **PR789** **PR790** **PR791** **PR792** **PR793** **CONTINUED**	

These parameters are used so that the history of the last ten activations of the particle filter warning light are known.

In **Vdiag 18, 1C, 54**:
Each parameter from **PR784** to **PR793** records the distance when the particle filter warning light comes on which is associated with the appearance of **DF312**.
Each time the particle filter warning light comes on, the vehicle mileage is stored in the following parameter (PR+1).

When all ten parameters have a value other than zero, and the particle filter warning light comes on again, the distance information for **PR784** is cleared and replaced by the new value.

For other Vdiags:

Each parameter from **PR784 DF312 record no. 1** to **PR793 DF312 record no. 10** contains a record of the vehicle mileage when the particle filter warning light comes on. The appearance of fault **DF312 Speed request** is associated with each of these parameters.

PR784 to **PR793** operate through successive copying (when the particle filter warning light comes on, the value of **PR784** is copied to **PR785 DF312 record no. 2,** the value of **PR785** is copied to **PR786 DF312 record no. 3** and so on).
When there are more than ten records, the value of **PR793** is deleted. The new mileage is allocated to **PR784**.

If none of the parameters between **PR784** and **PR793** is available in the sub-function, this means that no data has been saved. The parameters appear in the sub-function when they have a value above zero.

AFTER REPAIR	Carry out a road test, then check with the **diagnostic tool**.

GETtheMANUALS.org

PR794	STORED REGENERATION FAILURE NO. 1
PR795	STORED REGENERATION FAILURE NO. 2
PR796	STORED REGENERATION FAILURE NO. 3
PR797	STORED REGENERATION FAILURE NO. 4
PR798	STORED REGENERATION FAILURE NO. 5
PR799	STORED REGENERATION FAILURE NO. 6
PR800	STORED REGENERATION FAILURE NO. 7
PR801	STORED REGENERATION FAILURE NO. 8
PR802	STORED REGENERATION FAILURE NO. 9
PR803	STORED REGENERATION FAILURE NO. 10

PARAMETER DEFINITION	These parameters are shown in **miles (km)**.

NOTES	**Special notes:** These parameters must only be interpreted for **DF312 Speed request** if it is **present** or **stored**.

Conformity check with engine stopped and ignition on, or engine running, and engine coolant temperature > 80°C

These parameters are used so that the history of the last ten regeneration failures when driving can be found.

AFTER REPAIR	Carry out a road test, then check with the **diagnostic tool**.

EDC16CP33_V18_PR794 / EDC16CP33_V18_PR795 / EDC16CP33_V18_PR796 / EDC16CP33_V18_PR797 / EDC16CP33_V18_PR798 / EDC16CP33_V18_PR799 / EDC16CP33_V18_PR800 / EDC16CP33_V18_PR801 / EDC16CP33_V18_PR802 / EDC16CP33_V18_PR803 / EDC16CP33_V1C_PR794 / EDC16CP33_V1C_PR795 / EDC16CP33_V1C_PR796 / EDC16CP33_V1C_PR797 / EDC16CP33_V1C_PR798 / EDC16CP33_V1C_PR799 / EDC16CP33_V1C_PR800 / EDC16CP33_V1C_PR801 / EDC16CP33_V1C_PR802 / EDC16CP33_V1C_PR803 / EDC16CP33_V54_PR794 / EDC16CP33_V54_PR795 / EDC16CP33_V54_PR796 / EDC16CP33_V54_PR797 / EDC16CP33_V54_PR798 / EDC16CP33_V54_PR799 / EDC16CP33_V54_PR800 / EDC16CP33_V54_PR801 / EDC16CP33_V54_PR802 / EDC16CP33_V54_PR803 / EDC16CP33_V20_PR794 / EDC16CP33_V20_PR795 / EDC16CP33_V20_PR796 / EDC16CP33_V20_PR797 / EDC16CP33_V20_PR798 / EDC16CP33_V20_PR799 / EDC16CP33_V20_PR800 / EDC16CP33_V20_PR801 / EDC16CP33_V20_PR802 / EDC16CP33_V20_PR803 / EDC16CP33_V58_PR794 / EDC16CP33_V58_PR795 / EDC16CP33_V58_PR796 / EDC16CP33_V58_PR797 / EDC16CP33_V58_PR798 / EDC16CP33_V58_PR799 / EDC16CP33_V58_PR800 / EDC16CP33_V58_PR801 / EDC16CP33_V58_PR802 / EDC16CP33_V58_PR803 / EDC16CP33_V5C_PR794 / EDC16CP33_V5C_PR795 / EDC16CP33_V5C_PR796 / EDC16CP33_V5C_PR797 / EDC16CP33_V5C_PR798 / EDC16CP33_V5C_PR799 / EDC16CP33_V5C_PR800 / EDC16CP33_V5C_PR801 / EDC16CP33_V5C_PR802 / EDC16CP33_V5C_PR803 / EDC16CP33_V24_PR794 / EDC16CP33_V24_PR795 / EDC16CP33_V24_PR796 / EDC16CP33_V24_PR797 / EDC16CP33_V24_PR798 / EDC16CP33_V24_PR799 / EDC16CP33_V24_PR800 / EDC16CP33_V24_PR801 / EDC16CP33_V24_PR802 / EDC16CP33_V24_PR803 / EDC16CP33_V26_PR794 / EDC16CP33_V26_PR795 / EDC16CP33_V26_PR796 / EDC16CP33_V26_PR797 / EDC16CP33_V26_PR798 / EDC16CP33_V26_PR799 / EDC16CP33_V26_PR800 / EDC16CP33_V26_PR801 / EDC16CP33_V26_PR802 / EDC16CP33_V26_PR803 / EDC16CP33_V60_PR794 / EDC16CP33_V60_PR795 / EDC16CP33_V60_PR796 / EDC16CP33_V60_PR797 / EDC16CP33_V60_PR798 / EDC16CP33_V60_PR799 / EDC16CP33_V60_PR800 / EDC16CP33_V60_PR801 / EDC16CP33_V60_PR802 / EDC16CP33_V60_PR803

GETtheMANUALS.org

PR794 **PR795** **PR796** **PR797** **PR798** **PR799** **PR800** **PR801** **PR802** **PR803** **CONTINUED**	

In **Vdiag 18, 1C, 54**:
Each of these parameters contains the vehicle mileage during a failed particle filter regeneration when driving. Each parameter relates to an engine status. The **statuses** and **parameters** are recorded at the same time (for example **PR797** is associated with **ET709 Stored engine status no. 4**).

Each new recorded value is saved under the next **PR (PR+1)**.

When all ten parameters have a value other than zero and there is a regeneration failure when driving, the distance information for **PR794** is cleared and replaced by the new value.

For other Vdiags:

Every parameter between **PR794 Stored regeneration failure no. 1** and **PR803 Stored regeneration failure no. 10** contains the vehicle mileage at the time of a particle filter regeneration failure when driving. Each parameter relates to an engine status. They are recorded simultaneously (for example **PR797 is associated with ET709 Stored engine status no. 4**).

PR794 to **PR803** operate through successive copying (when there is a regeneration failure when driving, the value of **PR794** is copied to **PR795 Stored regeneration failure no. 2**, the value of **PR795** is copied to **PR796 Stored regeneration failure no. 3** and so on).
When there are more than ten records, the value of **PR803** is deleted. The new mileage is allocated to **PR794**.

AFTER REPAIR	Carry out a road test, then check with the **diagnostic tool**.

GETtheMANUALS.org

PR816	STORED REGENERATION START NO. 1
PR817	STORED REGENERATION START NO. 2
PR818	STORED REGENERATION START NO. 3
PR819	STORED REGENERATION START NO. 4
PR820	STORED REGENERATION START NO. 5
PR821	STORED REGENERATION START NO. 6
PR822	STORED REGENERATION START NO. 7
PR823	STORED REGENERATION START NO. 8
PR824	STORED REGENERATION START NO. 9
PR825	STORED REGENERATION START NO. 10

PARAMETER DEFINITION	These parameters are shown in **miles (km)**.

NOTES	**Special notes:** These parameters should only be interpreted for **ALP 9 Particle filter warning light comes on too frequently**.

Conformity check with engine stopped and ignition on, or engine running, and engine coolant temperature > 80°C

These parameters are used so that the history of the last ten illuminations of the particle filter warning light are known.

AFTER REPAIR	Carry out a road test, then check with the **diagnostic tool**.

EDC16CP33_V18_PR816 / EDC16CP33_V18_PR817 / EDC16CP33_V18_PR818 / EDC16CP33_V18_PR819 / EDC16CP33_V18_PR820 / EDC16CP33_V18_PR821 / EDC16CP33_V18_PR822 / EDC16CP33_V18_PR823 / EDC16CP33_V18_PR824 / EDC16CP33_V18_PR825 / EDC16CP33_V1C_PR816 / EDC16CP33_V1C_PR817 / EDC16CP33_V1C_PR818 / EDC16CP33_V1C_PR819 / EDC16CP33_V1C_PR820 / EDC16CP33_V1C_PR821 / EDC16CP33_V1C_PR822 / EDC16CP33_V1C_PR823 / EDC16CP33_V1C_PR824 / EDC16CP33_V1C_PR825 / EDC16CP33_V54_PR816 / EDC16CP33_V54_PR817 / EDC16CP33_V54_PR818 / EDC16CP33_V54_PR819 / EDC16CP33_V54_PR820 / EDC16CP33_V54_PR821 / EDC16CP33_V54_PR822 / EDC16CP33_V54_PR823 / EDC16CP33_V54_PR824 / EDC16CP33_V54_PR825 / EDC16CP33_V20_PR816 / EDC16CP33_V20_PR817 / EDC16CP33_V20_PR818 / EDC16CP33_V20_PR819 / EDC16CP33_V20_PR820 / EDC16CP33_V20_PR821 / EDC16CP33_V20_PR822 / EDC16CP33_V20_PR823 / EDC16CP33_V20_PR824 / EDC16CP33_V20_PR825 / EDC16CP33_V58_PR816 / EDC16CP33_V58_PR817 / EDC16CP33_V58_PR818 / EDC16CP33_V58_PR819 / EDC16CP33_V58_PR820 / EDC16CP33_V58_PR821 / EDC16CP33_V58_PR822 / EDC16CP33_V58_PR823 / EDC16CP33_V58_PR824 / EDC16CP33_V58_PR825 / EDC16CP33_V5C_PR816 / EDC16CP33_V5C_PR817 / EDC16CP33_V5C_PR818 / EDC16CP33_V5C_PR819 / EDC16CP33_V5C_PR820 / EDC16CP33_V5C_PR821 / EDC16CP33_V5C_PR822 / EDC16CP33_V5C_PR823 / EDC16CP33_V5C_PR824 / EDC16CP33_V5C_PR825 / EDC16CP33_V24_PR816 / EDC16CP33_V24_PR817 / EDC16CP33_V24_PR818 / EDC16CP33_V24_PR819 / EDC16CP33_V24_PR820 / EDC16CP33_V24_PR821 / EDC16CP33_V24_PR822 / EDC16CP33_V24_PR823 / EDC16CP33_V24_PR824 / EDC16CP33_V24_PR825 / EDC16CP33_V26_PR816 / EDC16CP33_V26_PR817 / EDC16CP33_V26_PR818 / EDC16CP33_V26_PR819 / EDC16CP33_V26_PR820 / EDC16CP33_V26_PR821 / EDC16CP33_V26_PR822 / EDC16CP33_V26_PR823 / EDC16CP33_V26_PR824 / EDC16CP33_V26_PR825 / EDC16CP33_V60_PR816 / EDC16CP33_V60_PR817 / EDC16CP33_V60_PR818 / EDC16CP33_V60_PR819 / EDC16CP33_V60_PR820 / EDC16CP33_V60_PR821 / EDC16CP33_V60_PR822 / EDC16CP33_V60_PR823 / EDC16CP33_V60_PR824 / EDC16CP33_V60_PR825

GETtheMANUALS.org

PR816 **PR817** **PR818** **PR819** **PR820** **PR821** **PR822** **PR823** **PR824** **PR825** **CONTINUED**	

In **Vdiag 18, 1C, 54**:
Each parameter between **PR816** and **PR825** contains the vehicle distance stored when particle filter regeneration starts when driving. Each parameter is connected with a status "Regeneration request status record". They are recorded simultaneously (for example **PR819** is associated with **ET745 Stored regeneration request status No. 4**).

Each new recorded value is saved under the next **PR (PR+1)**.
When all ten parameters have a value other than zero, and a new regeneration starts when driving, the distance information for **PR816** is cleared and replaced by the new value.

For other Vdiags:

Each parameter from **PR816 Stored regeneration start No. 1** to **PR825 Stored regeneration start No. 10** records the mileage when particle filter regeneration starts for which the status request is recorded in **ET742 Stored rege*. request status No.1 to ET751 Stored rege*. request status No.10**. (for example **PR819 Stored regeneration start No. 4 is associated with ET745 Stored rege*. request status No.4**).

Each time a new regeneration when driving is started, the vehicle mileage is recorded in **PR816**, as well as its status in **ET742**.

PR816 to **PR825** operate through successive copying (when regeneration starts, the value of **PR816** is copied to **PR817 Stored regeneration start no. 2**, the value of **PR817** is copied to **PR818 Stored regeneration start no. 3** and so on).

rege*: Regeneration

AFTER REPAIR	Carry out a road test, then check with the **diagnostic tool**.

GETtheMANUALS.org

PR846	TURBOCHARGING SV* OCR*

PARAMETER DEFINITION	This parameter indicates the turbocharging solenoid valve opening ratio percentage.

NOTES	None.

Conformity check with engine stopped and ignition on, or engine running, and engine coolant temperature > 80°C

PR846 ≈ **PR104 Turbocharging solenoid valve OCR**, these 2 values must be similar.
In the event of a fault, consult the interpretation of fault **DF054 EGR valve position sensor circuit**.

OCR*: Opening Cyclic Ratio
SV*: Solenoid valve

AFTER REPAIR	Carry out a road test, then check with the **diagnostic tool**.

GETtheMANUALS.org

PR848	NUMBER OF REGENERATION FAILURES

PARAMETER DEFINITION	This parameter indicates the number of regeneration failures.

NOTES	None.

Conformity check with engine stopped and ignition on, or engine running, and engine coolant temperature > 80°C

This parameter indicates the number of failed regenerations when driving.

AFTER REPAIR	Carry out a road test, then check with the **diagnostic tool**.

GETtheMANUALS.org

PR850	FUEL FLOW SOLEN.* CURRENT SETPOINT

PARAMETER DEFINITION	This parameter indicates the setpoint for the current absorbed by the fuel flow solenoid valve in **mA**.

NOTES	None.

Conformity check with engine stopped and ignition on, or engine running, and engine coolant temperature > 80°C

This parameter indicates the setpoint for the current absorbed by the fuel flow solenoid valve.

SOLEN.*: Solenoid valve

AFTER REPAIR	Carry out a road test, then check with the **diagnostic tool**.

GETtheMANUALS.org

PR858	DAMPER VALVE OPEN FIRST OFFSET

PARAMETER DEFINITION	This parameter indicates the damper valve opening ratio during the first damper valve offset.

NOTES	None.

Conformity check with engine stopped and ignition on, or engine running, and engine coolant temperature > 80°C

This parameter indicates the damper valve opening offset percentage.

PR858 ≈ **PR861 Damper valve open last offset**, these two values must be similar.

In the event of a fault, consult the interpretation of faults **DF645 Damper valve position regulation, DF646 Damper valve position sensor** and **DF323 Damper valve**.

AFTER REPAIR	Carry out a road test, then check with the **diagnostic tool**.

GETtheMANUALS.org

PR859	DAMPER VALVE CLOSED FIRST OFFSET

PARAMETER DEFINITION	This parameter indicates the damper valve closing ratio during the first damper valve offset.

NOTES	None.

Conformity check: Engine stopped and ignition on, or engine running, and engine coolant temperature > 80°C

This parameter indicates the damper valve closing offset percentage.

PR859 ≈ **PR860 Damper valve closed last offset**, these two values must be similar.

In the event of a fault, consult the interpretation of faults **DF645 Damper valve position regulation, DF646 Damper valve position sensor** and **DF323 Damper valve**.

AFTER REPAIR	Carry out a road test, then check with the **diagnostic tool**.

GETtheMANUALS.org

PR860	DAMPER VALVE CLOSED LAST OFFSET

PARAMETER DEFINITION	This parameter indicates the damper valve closing ratio during the first damper valve offset.

NOTES	None.

Conformity check: Engine stopped and ignition on, or engine running, and engine coolant temperature > 80°C

This parameter indicates the damper valve closing offset percentage.

PR860 ≈ **PR859 Damper valve closed first offset**, these two values must be similar.

In the event of a fault, consult the interpretation of faults **DF645 Damper valve position regulation, DF646 Damper valve position sensor** and **DF323 Damper valve**.

AFTER REPAIR	Carry out a road test, then check with the **diagnostic tool**.

GETtheMANUALS.org

PR861	DAMPER VALVE OPEN LAST OFFSET

PARAMETER DEFINITION	This parameter indicates the damper valve closing ratio during the first damper valve offset.

NOTES	None.

Conformity check: Engine stopped and ignition on, or engine running, and engine coolant temperature > 80°C

This parameter indicates the damper valve opening offset percentage.

PR861 ≈ **PR858 Damper valve open first offset**, these two values must be similar.

In the event of a fault, consult the interpretation of faults **DF645 Damper valve position regulation, DF646 Damper valve position sensor** and **DF323 Damper valve**.

AFTER REPAIR	Carry out a road test, then check with the **diagnostic tool**.

GETtheMANUALS.org

PR863	DAMPER VALVE POSITION FEEDBACK

PARAMETER DEFINITION	This parameter indicates the damper valve opening ratio.

NOTES	None.

Conformity check with engine stopped and ignition on.

PR863 ≈ PR747 Damper valve position
The damper valve opening percentage value must be:
PR863 = 0% (with the engine stopped),
PR863 ≈ 5% (with the ignition on).
In the event of a fault, consult the interpretation of faults **DF646 Damper valve position sensor** and **DF323 Damper valve**.

Conformity check with the engine running and engine coolant temperature > 80°C

The damper valve opening percentage value must be:
PR863 ≈ 5% (at idle speed).
In the event of a fault, refer to the interpretation of faults **DF646** and **DF323**.

AFTER REPAIR	Carry out a road test, then check with the **diagnostic tool**.

GETtheMANUALS.org

PR873	OIL OXIDATION SIGNAL

STATUS DEFINITION	This parameter indicates the vehicle distance in **miles (km)** when the oil oxidation threshold is reached.

NOTES	This parameter should only be interpreted if the **OCS (Oil Control System)** program is activated on the instrument panel. On the instrument panel computer, check the configuration reading **LC106 O.C.S**: **WITH.**

Conformity check: Engine stopped and the ignition on, or Engine running and the engine coolant temperature > 80°C without electrical consumers

The oil condition is calculated by the oxidation program in the injection computer, according to the number of engine revolutions.

When this count reaches a certain threshold before the end of the oil service period, the injection computer sends a signal to the instrument panel, which will display **service due**. Parameter **PR873** corresponds to the vehicle mileage at the time this signal is sent.

Then the instrument panel computer deducts **900 miles (1500 km)** before displaying the message **Service required**.

IMPORTANT:
When the message **Service due** appears on the instrument panel, the customer must have the oil changed within the remaining **900 miles (1500 km)**.

AFTER REPAIR	Carry out a road test, then check with the **diagnostic tool**.

EDC16CP33_V5C_PR873 / EDC16CP33_V20_PR873 / EDC16CP33_V34_PR873 / EDC16CP33_V38_PR873 / EDC16CP33_V74_PR873 / EDC16CP33_V26_PR873 / EDC16CP33_V28_PR873 / EDC16CP33_V60_PR873 / EDC16CP33_V62_PR873

GETtheMANUALS.org

PR874	LAST SERVICE

STATUS DEFINITION	This parameter indicates the vehicle's mileage at the last service in **miles (km)**. It is updated when the oil service parameters are reinitialised on the instrument panel.

NOTES	None.

AFTER REPAIR	Carry out a road test, then check with the **diagnostic tool**.

GETtheMANUALS.org

PR875	OIL DILUTION SIGNAL

STATUS DEFINITION	This parameter indicates the vehicle mileage in **miles (km)** when the oil dilution threshold is reached.

NOTES	This parameter should only be interpreted if the **OCS (Oil Control System)** program is activated on the instrument panel. On the instrument panel computer, check the configuration reading **LC106 O.C.S**: **WITH.**

Conformity check: Engine stopped and ignition on, or engine running and engine coolant temperature > 80°C without electrical consumers

The injection computer estimates the degree of engine oil dilution according to the customer's driving style.

When the dilution level reaches a certain threshold before the end of the oil change interval, the injection computer sends a signal to the instrument panel which then displays **Service required**. Parameter **PR875** corresponds to the vehicle mileage at the time this signal is sent.

IMPORTANT:
When the message **Service required** appears on the instrument panel, the customer must arrange an immediate oil change to prevent damage to the engine.

AFTER REPAIR	Carry out a road test, then check with the **diagnostic tool**.

GETtheMANUALS.org

PR1012	WEIGHT OF SOOT AFTER REGENERATION

STATUS DEFINITION	This parameter indicates the weight in **g** of soot present in the particle filter following regeneration.

NOTES	This parameter should be consulted after running **SC017 Particle filter regeneration**.

Conformity check: Engine stopped and ignition on, or engine running and engine coolant temperature > 80°C without electrical consumers

If this parameter is less than **15 g**, particle filter regeneration was successful.
If **PR1012** is greater than **15 g**, it is necessary to perform a second particle filter regeneration using command **SC017 Particle filter regeneration**.

IMPORTANT:
Before performing a second After-Sales regeneration of the particle filter, the engine must be allowed to cool down for **2 hours** with the bonnet open.
Do not carry out an engine oil change before a second After-Sales regeneration.

AFTER REPAIR	Carry out a road test, then check with the **diagnostic tool**.

EDC16CP33_V1C_PR1012 / EDC16CP33_V54_PR1012 / EDC16CP33_V20_PR1012 / EDC16CP33_V58_PR1012 / EDC16CP33_V5C_PR1012 / EDC16CP33_V24_PR1012 / EDC16CP33_V28_PR1012 / EDC16CP33_V62_PR1012/ EDC16CP33_V26_PR1012 / EDC16CP33_V60_PR1012

GETtheMANUALS.org

NOTES	The commands are run to check the correct operation of certain components or to replace parts.

Tool command	Diagnostic tool title
SC001	Write saved data
SC002	Enter injector codes
SC003	Save computer data
SC017	Particle filter regeneration (except Vdiag 18, 04, 08, 44, 4C, 34, 38, 74)
SC031	Operational fault finding of cylinders (except Vdiag 18)
SC035	High pressure fuel circuit fault finding
SC036	Reinitialise programming
RZ001	Fault memory
RZ005	Programming
RZ034	Computer memory
AC004	Turbocharging solenoid valve
AC012	Damper valve
AC031	Thermoplunger No. 3 relay
AC037	Preheating relay
AC063	Thermoplunger No. 1 relay
AC064	Thermoplunger No. 2 relay
AC103	EGR by-pass
AC153	High speed fan assembly (except Mégane II ph2 and Scénic II ph2)
AC154	Low speed fan assembly (except Mégane II ph2 and Scénic II ph2).
AC195	Electric coolant pump (except Vdiag 04, 08, 44, 4C, 34, 38, 74)
AC225	Rail pressure regulator
AC226	Pump pressure regulator.
MT001	Turbocharging function (Vdiag 04 and 44 only)
VP010	Write VIN
VP036	Fuel supply inhibited

GETtheMANUALS.org

SC001	WRITE SAVED DATA

NOTES	To use this command, first save the data with the **SC003 Save computer data** command. The writing is carried out after the computer has been reprogrammed or replaced. Engine stopped.

In the **diagnostic tool**, select scenario **SC001**.

Note:
If no files have been saved before, a write error appears when command **SC001** is activated.

Validating this command writes the data saved using command **SC003 Save computer data**.

The data is as follows:
– vehicle-specific idling,
– injector codes,
– various offsets for components, EGR, damper valve,
– options available on the vehicle and generated by the computer.

This data will configure the computer and will prevent:
– engine malfunction after reprogramming or replacing the computer,
– incorrect interpretation of the information provided by the **diagnostic tool**.

AFTER REPAIR	Carry out a road test, then check with the **diagnostic tool**.

GETtheMANUALS.org

SC002	ENTER INJECTOR CODES

NOTES	This command is carried out after the replacement of one or more injectors. Engine stopped.

To enter this information, select command **SC002** in the **diagnostic tool**.
Procedure to be followed:
– Read the 7-character alphanumeric codes engraved on the upper section of the injector bodies. **The IMA* codes should be read from left to right** (see illustration in **MR 402 (Vel Satis ph2), MR 395 (Laguna II ph2), MR 364 (Mégane II ph2), MR 370 (Scénic II ph2), MR 405 (Espace IV ph2) Mechanical, 13B, Diesel injection, Diesel injector, Removal – Refitting**)
Note: When entering characters, confusion can arise between:
– Figure **1** with the letters **I** and **L,**
– Figure **2** with the letter **Z,**
– Figure **5** with the letter **S,**
– Figure **6** with the letter **G,**
– Figure **8** with the letter **B.**
After programming or reprogramming the computer, it is essential to enter the 4 injector codes before confirming the entry.
– Enter each injector code for the associated cylinder.
– **Important:** cylinder no. 1 is located at the timing end.
– Confirm the change of injector code configuration.
– When the command is completed, the modified codes appear in the current column.
– Check that the codes correspond to those read earlier.
If the codes entered appear in neither the "current" column nor the "desired" column, check the codes read and make sure the data has been entered correctly.
– Exit fault finding mode.
– Switch off the ignition and wait for the **diagnostic tool** message (maximum wait **8 min**): **Loss of dialogue with the computer: EDC16 CP33, check the tool connection and the computer supply**.
– Switch the ignition back on and check for faults.
– **DF066 Injector code(s)** should be **stored**.

IMA*: Individual injector correction

AFTER REPAIR	Carry out a road test, then check with the **diagnostic tool**.

GETtheMANUALS.org

SC002 CONTINUED	

If **DF066** is still **present**, the command has not been run correctly.
Start the procedure again and follow the instructions.
If this is still not effective, follow the procedure below:
A fault could cause **DF066** to be reported, and also incorrect confirmation of command **SC002**.
If the power latch does not occur after switching off the ignition, the injection computer will not store the new injector codes:
Switch off the ignition and wait for the **diagnostic tool** message (maximum wait **8 min**): **Loss of dialogue with the computer: EDC16 CP33, check the tool connection and the computer supply**.
Switch off the ignition and check that the immobiliser warning light flashes **2 seconds** after the ignition is switched off.
If the warning light flashes as soon as the ignition is switched off, the power latch has not been performed and the command will not be taken into account.
If all these checks do not enable the command to be confirmed, contact the Techline.

AFTER REPAIR	Carry out a road test, then check with the **diagnostic tool**.

GETtheMANUALS.org

SC003	SAVE COMPUTER DATA

NOTES	This save is performed before reprogramming or replacing the computer. Engine stopped.

In the **diagnostic tool**, select scenario **SC003**.

Confirming this command saves the following vehicle-specific data:
– Vehicle-specific idling.
– Injector code(s).
– Options available on the vehicle and managed by the computer.
– Various offsets for components, EGR, damper valve.

This information will be saved in the **diagnostic tool**.

After saving has finished, use the command **SC001 Enter saved data** to be able to set the new computer parameters, after programming and reprogramming.

AFTER REPAIR	Carry out a road test, then check with the **diagnostic tool**.

EDC16CP33_V18_SC003 / EDC16CP33_V1C_SC003 / EDC16CP33_V54_SC003 / EDC16CP33_V20_SC003 / EDC16CP33_V58_SC003 / EDC16CP33_V5C_SC003 / EDC16CP33_V24_SC003 / EDC16CP33_V04_SC003 / EDC16CP33_V08_SC003 / EDC16CP33_V44_SC003 / EDC16CP33_V4C_SC003 / EDC16CP33_V34_SC003 / EDC16CP33_V38_SC003 / EDC16CP33_V74_SC003 / EDC16CP33_V28_SC003 / EDC16CP33_V62_SC003 / EDC16CP33_V26_SC003 / EDC16CP33_V60_SC003

GETtheMANUALS.org

SC017	PARTICLE FILTER REGENERATION

NOTES	Only run this command after interpretation of the following faults: – **DF308 Clogged particle filter,** – **DF311 Failed regenerations limit exceeded,** – **df312: speed request.**

WARNING:
– It is essential to observe the health and safety guidelines (see **MR364 (Mégane II ph2), MR370 (Scénic II ph2), MR 395 (Laguna II ph2), 402 (Vel Satis ph2), 405 (Espace IV ph2) Mechanical, 19B, Exhaust**, **Particle filter: Cleaning**) and follow the procedure below.

SAFETY INSTRUCTIONS TO BE FOLLOWED:

The regeneration causes exhaust fumes and high temperatures.
It is strongly recommended that you put the vehicle outside during regeneration.
If it is not possible to carry out regeneration outside, use an extractor fan that can withstand the very high regeneration temperatures **(400°C at the exhaust outlet)**.

Perform regeneration on a surface free from fire risks (oil, dry leaves, etc.).
Nothing should be left in the vicinity of the exhaust pipe.

Check that there are no leaks or blockages in the exhaust pipe,
Repair if necessary.

WARNING:
Check the engine oil level before running the command to avoid any engine racing. The oil level must be between the minimum level and the middle level on the oil dipstick.
Before performing a particle filter regeneration, it is essential to deactivate the air conditioning compressor (risk of engine damage) and all the electrical consumers.

IF NECESSARY:

Regeneration can be stopped by pressing the engine start button twice briefly (less than **3 seconds**).
Switch off the ignition and wait for the **diagnostic tool** message (maximum time **8 minutes**) **Communication lost with computer: EDC16 C33, check the tool connection and the computer power supply** before switching the ignition back on.

AFTER REPAIR	Carry out a road test, then check with the **diagnostic tool**.

EDC16CP33_V1C_SC017 / EDC16CP33_V54_SC017 / EDC16CP33_V20_SC017 / EDC16CP33_V58_SC017 / EDC16CP33_V5C_SC017 / EDC16CP33_V24_SC017 / EDC16CP33_V28_SC017 / EDC16CP33_V62_SC017/ EDC16CP33_V26_SC017 / EDC16CP33_V60_SC017

GETtheMANUALS.org

SC017 CONTINUED 1	

PROCEDURE TO BE FOLLOWED:

To run this command, select the command mode on the **diagnostic tool** and run command **SC017**.

When regeneration is complete, a message will indicate whether regeneration was successful, and what operations need to be carried out **(filter replacement, whether an oil service is required, etc.).**

DESCRIPTION OF THE PROCESS

particle filter regeneration takes place in 3 stages (values given as a guide only):
Heating phase: the speed is fixed or fluctuating around **3000 rpm**.
- This phase lasts at least **6 minutes**, until the coolant temperature is above **80°C**.
- **Regeneration phase**: the speed is fixed or varies around **2000 rpm**. Engine injection is retarded. The exhaust fumes rise in temperature and burn the soot retained in the particle filter. The **particle filter downstream temperature** starts to rise after the **particle filter upstream temperature** due to the volume of the particle filter. Then the combustion of the soot stored in the particle filter causes the **particle filter downstream temperature** to increase, possibly reaching more than **700°C** depending on the amount of soot in the filter (with a **particle filter upstream temperature** of around **600°C**). This phase lasts about **30 minutes**.
- **Cooling phase:** the engine speed is fixed or varies around **2000 rpm**.
- Engine injection returns to normal and the exhaust gases cool the particle filter.
- This phase lasts **3 minutes**. At the end of this period, the engine speed returns to idle speed or remains fixed at **2000 rpm**.

The process lasts at least 40 minutes (the regeneration time will be increased depending on how long it takes for the coolant to heat up to **80°C**).

AFTER REPAIR	Carry out a road test, then check with the **diagnostic tool**.

GETtheMANUALS.org

SC017 CONTINUED 2	

VALIDATING THE REGENERATION PROCESS:

At the end of regeneration, a message appears to announce whether the regeneration was successful:
- **Particle filter regeneration finished**:

Consult **PR1012 Weight of soot after regeneration.** If this parameter is less than **15 g,** the particle filter regeneration was successful. If **PR1012** is greater than **15 g**, it is necessary to carry out a second particle filter regeneration using **the diagnostic tool** and run command **SC017**.

IMPORTANT:
Before performing a second After-Sales regeneration of the particle filter, the engine must be allowed to cool down for **2 hours** with the bonnet open.
Do not carry out an engine oil change before a second After-Sales regeneration.

For **Vdiag 28 and 62**:
Change the engine oil if requested by a message on the instrument panel.

For the other **VDiag**:
Consult **PR848 Number of regeneration failures**. If **PR848** is greater than **3**, change the engine oil.

Particle filter too full - replace the particle filter: regeneration has failed. The weight of soot in the particle filter is so great that it is creating a counter pressure. Deal with any faults that appear or replace the particle filter. Run command **SC036: Reinitialise programming** and select **After particle filter replacement**.

For **Vdiag 28 and 62**:
Change the engine oil if requested by a message on the instrument panel.

For the other **Vdiags:**
Consult **PR848 Number of regeneration failures**. If this parameter is greater than **3**, it is essential to change the engine oil.

AFTER REPAIR	Carry out a road test, then check with the **diagnostic tool**.

GETtheMANUALS.org

SC017 CONTINUED 3	

– **Particle filter regeneration failed:** regeneration failed because the temperature upstream of the turbine is too low. Apply **Test 11 Temperature upstream of turbine too low**.

In all cases, carry out the following operations:
– switch off the ignition and wait for the **diagnostic tool** message (maximum time **8 minutes**) **Communication lost with computer: EDC16 CP33, check the tool connection and the computer supply**,
– switch on the ignition and establish dialogue with the injection computer,
– run command **SC036**,
– depending on the operation carried out, select **After particle filter regeneration with the diagnostic tool or After particle filter replacement**,
– **switch off the ignition and wait** for the **diagnostic tool** message (maximum wait **8 min**): **Loss of dialogue with the computer: EDC16 CP33, check the tool connection and the computer supply voltage**,
– then switch on the ignition again,
clear the **present** or **stored** faults from the computer memory (**operation to be carried out within 3 minutes of switching on the ignition**).

Note:
Always change the **engine oil** and the **oil filter** in the following cases:
• following an After-Sales regeneration **only** if requested by a message on the **CLIP diagnostic tool**,
• after particle filter replacement following **DF311 Number of failed regenerations exceeded**,
– after a second regeneration (when two successive regenerations).

AFTER REPAIR	Carry out a road test, then check with the **diagnostic tool**.

GETtheMANUALS.org

SC031	OPERATIONAL FAULT FINDING OF CYLINDERS

NOTES	This command allows fault finding to be carried out on the output of each cylinder and each injector and applies to all the Vdiags **except Vdiag 18, 04** and **44**. **Note**: For **Vdiags 18, 04** and **44**, check that the fuel flow correction value of parameters **PR364 Cylinder no. 1 fuel flow correction, PR365 Cylinder no. 4 fuel flow correction, PR405 Cylinder no. 2 fuel flow correction** and **PR406 Cylinder no. 3 fuel flow correction** is between: **-5 mg/st < X < 5 mg/st**.

Reminder: cylinder no. 1 is located at the timing end.

Procedure to be followed:
– select scenario **SC031**,
– once the conditions have been met, press the **confirm** button; the test will take approximately **5 minutes**,
– the tool displays **cylinder no. 1 cut-off** and there will be a perceptible engine speed variation when the cylinder is cut off; then the same procedure for the other three cylinders,
– **the diagnostic tool** displays the results,
– end of test.

Interpretation of correct results:

– If the displayed results are **"VALID"**, it means that the entire cylinder and injector assembly is in order. There is no need for any operation.

	Results	**Interpretation of results**
Cylinder 1	VALID	No operation
Cylinder 2	VALID	No operation
Cylinder 3	VALID	No operation
Cylinder 4	VALID	No operation

AFTER REPAIR	Carry out a road test, then check with the **diagnostic tool**.

GETtheMANUALS.org

SC031 CONTINUED	

– If a displayed result is **INVALID**, the cylinder or injector is not correct.

	Difference compared to average	Results	Interpretation of results
Cylinder X	Negative number or Positive number	INVALID	Carry out the checks described below.

Run **part B** of **Test 10 Poor injector operation** to continue fault finding.

If the result of scenario **SC031** is not confirmed, check the engine compressions:
Use a compression gauge and apply command **VP036 Fuel supply inhibition** (see **Interpretation of commands**).

Run compressions on all cylinders.
Are the compressions correct?

NO

Check the cylinder block.

YES

Check the fitting of the injector and repair if necessary.
Otherwise change the injector concerned.
After replacing the injector, follow the injector code programming procedure (see **Replacement of components**), run **SC036 Reinitialise programming**, and select the number of the injector replaced.

AFTER REPAIR	Carry out a road test, then check with the **diagnostic tool**.

GETtheMANUALS.org

SC035	HIGH PRESSURE FUEL CIRCUIT FAULT FINDING

NOTES	This command is used to interpret the state of the high pressure fuel circuit (high pressure pump, rail, injectors and high pressure supply pipes).

To run this command, select scenario **SC035** on the **diagnostic tool**.

Procedure to be followed:

– select scenario **SC035**,
– follow the instructions then **"confirm"**,
– with the command in progress: do not operate on the vehicle,
– switch off the engine at the end of the test,
– **the diagnostic tool** displays the results,
– end of test.

Interpretation of correct results:

– If the results displayed are **OK**, the entire high pressure fuel circuit is in order. There is no need for any operation.

STEP X (X is the variable from 1 to 4)	Rail pressure Raise time	Rail pressure Dump time	Interpretation of results
STEP X	OK	OK	No operation
STEP 5		OK	No operation

AFTER REPAIR	Carry out a road test, then check with the **diagnostic tool**.

EDC16CP33_V18_SC035 / EDC16CP33_V1C_SC035 / EDC16CP33_V54_SC035 / EDC16CP33_V20_SC035 / EDC16CP33_V58_SC035 / EDC16CP33_V5C_SC035 / EDC16CP33_V24_SC035 / EDC16CP33_V04_SC035 / EDC16CP33_V08_SC035 / EDC16CP33_V44_SC035 / EDC16CP33_V4C_SC035 / EDC16CP33_V34_SC035 / EDC16CP33_V38_SC035 / EDC16CP33_V74_SC035 / EDC16CP33_V28_SC035 / EDC16CP33_V62_SC035 / EDC16CP33_V26_SC035 / EDC16CP33_V60_SC035

GETtheMANUALS.org

SC035 CONTINUED 1	

Interpretation of incorrect results:

– Is one of the value definitions for the various displayed stages is **"TOO SLOW"** or **"TOO FAST"**, see the following table:

STEP X (X is the variable from 1 to 4)	Rail pressure Raise time	Rail pressure Dump time	Interpretation of results
STEP X	TOO SLOW	TOO SLOW	Check 1
STEP X	TOO SLOW	TOO FAST	Check 2
STEP X	TOO SLOW	OK	Check 3
STEP X	OK	TOO SLOW	Check 4
STEP X	OK	TOO FAST	Check 5
STEP 5		TOO FAST	Check 5

Explanation of results interpretation:

Check 1:
– Apply **Test 10 Poor injector operation**.
– Apply **ALP6 Fuel circuit leaks**.
– Apply **Test 3 Low pressure circuit check**.
– Replace the high pressure pump.

Check 2:
– Apply **Test 10**.
– Apply **ALP6**.
– Apply the part of **Test 3** concerning the fuel filter.
– Replace the high pressure pump.
– Check the injector return flow and the injectors.
– Check the rail pressure regulator by running command **AC225 Rail pressure regulator**.

AFTER REPAIR	Carry out a road test, then check with the **diagnostic tool**.

GETtheMANUALS.org

SC035 CONTINUED 2	

Check 3:
– Apply **Test 10**.
– Apply **Test 3**.
– Replace the high pressure pump.

Check 4:
– Replace the high pressure pump.

Check 5:
– Check the injector return flow and the injectors.
– Check the pressure regulator on the rail by running command **AC225**.

– Consult the Repair Manual depending on the results of the various checks (from 1 to 5), (see **MR 395 (Laguna II ph2), MR 364 (Mégane II ph2), MR 370 (Scénic II ph2), MR 405 (Espace IV ph2), MR 402 (Vel Satis ph2), Mechanical, 13B, Diesel injection, Injector rail, Removal - Refitting**).

AFTER REPAIR	Carry out a road test, then check with the **diagnostic tool**.

GETtheMANUALS.org

SC036	REINITIALISE PROGRAMMING

NOTES	This command is used to reset the computer parameters according to the type of operation or component repaired or replaced from the following list: – the injectors – the EGR valve, – the damper valve, – after particle filter replacement, – after particle filter regeneration using the **CLIP diagnostic tool**, – after injection computer replacement with no backup option, – the heater plugs. **Ignition on and engine stopped.**

To run this command, select scenario **SC036** in the **diagnostic tool**.

Procedure to be followed:
– on the main screen, select the component to reinitialise after an operation (removal - refitting, regeneration or replacement of the component),
– select **YES** then **OK** to begin reinitialisation,
– **Important**: when reinitialising injectors, do not forget that cylinder no. 1 is located at the timing end,
– select **end** on the **configuration completed** screen to return to the main screen,
– end of operation.

AFTER REPAIR	Carry out a road test, then check with the **diagnostic tool**.

EDC16CP33_V18_SC036 / EDC16CP33_V1C_SC036 / EDC16CP33_V54_SC036 / EDC16CP33_V20_SC036 / EDC16CP33_V58_SC036 / EDC16CP33_V5C_SC036 / EDC16CP33_V24_SC036 / EDC16CP33_V04_SC036 / EDC16CP33_V08_SC036 / EDC16CP33_V44_SC036 / EDC16CP33_V4C_SC036 / EDC16CP33_V34_SC036 / EDC16CP33_V38_SC036 / EDC16CP33_V74_SC036 / EDC16CP33_V28_SC036 / EDC16CP33_V62_SC036 / EDC16CP33_V26_SC036 / EDC16CP33_V60_SC036

GETtheMANUALS.org

RZ005	PROGRAMMING

NOTES	**Special notes:** this command enables you to reinitialise the entire computer configuration according to the vehicle.

Command **RZ005** reconfigures the computer.
If the computer does not have any configuration data, use command **RZ005** to enter the vehicle options:
– air conditioning,
– Passenger compartment heating resistor,
– cruise control/speed limiter.

These options are detected by the computer even if command **RZ005** is not used.

The computer is configured as soon as the one of the vehicle's optional system components is operated.

AFTER REPAIR	Carry out a road test, then check with the **diagnostic tool**.

EDC16CP33_V18_RZ005 / EDC16CP33_V1C_RZ005 / EDC16CP33_V54_RZ005 / EDC16CP33_V20_RZ005 / EDC16CP33_V58_RZ005 / EDC16CP33_V5C_RZ005 / EDC16CP33_V24_RZ005 / EDC16CP33_V04_RZ005 / EDC16CP33_V08_RZ005 / EDC16CP33_V44_RZ005 / EDC16CP33_V4C_RZ005 / EDC16CP33_V34_RZ005 / EDC16CP33_V38_RZ005 / EDC16CP33_V74_RZ005 / EDC16CP33_V28_RZ005 / EDC16CP33_V62_RZ005 / EDC16CP33_V26_RZ005 / EDC16CP33_V60_RZ005

GETtheMANUALS.org

RZ034	COMPUTER MEMORY

NOTES	**IMPORTANT** Only use this command if **DF107 Computer memory** is **Present**. **Ignition on and engine stopped.**

Command **RZ034** reinitialises the computer memory.

With the ignition on:
- Use command **RZ034**.
- Switch off the ignition and wait for the message Communication lost with computer.
- Switch on the ignition again.
- Run the programming commands (see **Configuration and programming**).
- Switch off the ignition and wait for the message Communication lost with computer.

Perform a road test to reinitialise the vehicle parameters.

AFTER REPAIR	Carry out a road test, then check with the **diagnostic tool**.

EDC16CP33_V18_RZ034 / EDC16CP33_V1C_RZ034 / EDC16CP33_V54_RZ034 / EDC16CP33_V20_RZ034 / EDC16CP33_V58_RZ034 / EDC16CP33_V5C_RZ034 / EDC16CP33_V24_RZ034 / EDC16CP33_V04_RZ034 / EDC16CP33_V08_RZ034 / EDC16CP33_V44_RZ034 / EDC16CP33_V4C_RZ034 / EDC16CP33_V34_RZ034 / EDC16CP33_V38_RZ034 / EDC16CP33_V74_RZ034 / EDC16CP33_V26_RZ034 / EDC16CP33_V28_RZ034/ EDC16CP33_V60_RZ034 / EDC16CP33_V62_RZ034

GETtheMANUALS.org

AC004	TURBOCHARGING SOLENOID VALVE

NOTES	Perform this fault finding procedure: – following interpretation of an unresolved fault or, – following application of the interpretation of **PR041 Turbocharging pressure** or – after a customer complaint (loss of power, smoke etc.).
	Use the **Wiring Diagram Technical Note, Laguna II ph2, Vel Satis ph2, Espace IV ph2, Mégane II ph2, Scénic II ph2**.

1. The following procedure is for checking that the turbocharger and its control circuit are working properly.

Preliminary operation

Check the high pressure air circuit is sealed:
Apply **Test 4 Turbocharged air inlet circuit check** or **Test 3 Low pressure circuit check**.
Pipe not joined or pierced, pressure sensor disconnected or poorly fitted (seal present), exchanger pierced.
To test the exchanger: stabilise the engine speed between **3500** and **4000 rpm** with the vehicle stopped and check that there are no leaks.

Measure the **resistance** between connections **3FB** and **3MG** of component **1475**.
If the resistance is not between **18 Ω and 22 Ω** at **+ 23°C,** replace the turbocharging solenoid valve.

Check **the continuity** of the following connection:
- **3MG** between the components **120** and **1475**.

Check the **+ 12 V after relay supply** of the turbocharging solenoid valve on the following connection:
- **3FB** of component **1475**.

If the connection or connections are faulty and there is a repair procedure (see **Technical Note 6015A, Electrical wiring repair, Wiring: Precautions for repair**), repair the wiring, otherwise replace it.

AFTER REPAIR	Carry out a road test, then check with the **diagnostic tool**.

GETtheMANUALS.org

AC004 CONTINUED	

Run command **AC004**; if a faint whistling noise is heard along with a clicking from the solenoid valve, go to **STEP 2**, otherwise check the operation of the computer output stage:

Vehicle under + after ignition feed, clear the faults displayed by the diagnostic tool.
With the voltmeter in the direct current position:
With the turbocharging solenoid valve connected, connect the voltmeter earth lead to connection **3MG** of component **1475** and the positive lead to connection **3FB** of component **1475**. Run command **AC004**; the voltmeter must display four successive voltages between **2.2 V and 2.6 V**.
If the measurement is not correct, contact the Techline.

2. turbocharger control circuit check
– Apply **Test 7 Variable geometry turbocharger control**.
– With the engine stopped, make sure that the control rod is in the resting position.
– Start the engine and make sure that the control rod actuates to the upper stop.
(when the engine stops, the control rod should return to the rest position).

If the control rod does not move correctly, carry out the following checks:

1. Check the control vacuum:
– Disconnect the solenoid valve inlet **hose** and connect it to a pressure gauge.
– Start the engine and run it at a stable idle speed.
If the vacuum does not reach a value **between 0.250 bar and 0.550 bar**, check the vacuum circuit from the vacuum pump.
– Stop the engine, reconnect the inlet **hose** and move onto step no. 2.

2. Check the solenoid valve actuation:
– Disconnect the solenoid valve outlet **hose**.
– Start the engine and run it at a stable idle speed.
– Place your hand on the solenoid valve and block the outlet **union** with your thumb.
– If there is no perceptible vibration of the solenoid valve, contact the Techline.

3. Check the solenoid valve actuation:
– Connect the pressure gauge to the solenoid valve outlet **union**.
– Start the engine and run it at a stable idle speed.
If the vacuum does not reach a value between **0.250 bar and 0.550 bar**, replace the solenoid valve.

AFTER REPAIR	Carry out a road test, then check with the **diagnostic tool**.

GETtheMANUALS.org

AC012	DAMPER VALVE

NOTES	Carry out this interpretation: – after **DF645 Damper valve position regulation**, **DF646 Damper valve position sensor**, – or after a customer complaint (starting faults, poor performance).
	Use the **Wiring Diagram Technical Note, Laguna II ph2, Mégane II, Scénic II, Espace IV ph2, Vel Satis ph2**.

Measure **the resistance** between connections **38KQ** and **38KP** of component **1461**.
If the resistance is not between **875** Ω **and 1625** Ω replace the damper valve.

Check the **continuity** and **absence of interference resistance** of the following connections:
- **38KQ** between components **120** and **1461**,
- **38KP** between components **120** and **1461**.

If the connection or connections are faulty and there is a repair procedure (see **Technical Note 6015A, Electrical wiring repair, Wiring: Precautions for repair**), repair the wiring, otherwise replace it.

With the vehicle ignition on, and the engine stopped:
Make sure the **damper flap** is **open**,
If not, clean or replace the damper valve.
Actuate the valve using command **AC012** and check the damper valve travel and rest position of the valve.

Check the operation of the computer output stage with a voltmeter in the alternating current position:
Actuate the valve with command **AC012**.
Connect the voltmeter earth lead to connection **38KS** of component **1461** and the positive lead to connection **38KQ** of component **1461**.
The voltmeter should display **three cycles** of ON-OFF (**12.5 V** then return to **0 V**).
If the measurement is correct, replace the damper valve
If the measurement does not show any operation, contact the Techline.

AFTER REPAIR	Carry out a road test, then check with the **diagnostic tool**.

EDC16CP33_V18_AC012 / EDC16CP33_V1C_AC012 / EDC16CP33_V54_AC012 / EDC16CP33_V20_AC012 / EDC16CP33_V58_AC012 / EDC16CP33_V5C_AC012 / EDC16CP33_V24_AC012 / EDC16CP33_V04_AC012 / EDC16CP33_V08_AC012 / EDC16CP33_V44_AC012 / EDC16CP33_V4C_AC012 / EDC16CP33_V34_AC012 / EDC16CP33_V38_AC012 / EDC16CP33_V74_AC012 / EDC16CP33_V28_AC012 / EDC16CP33_V62_AC012 / EDC16CP33_V26_AC012 / EDC16CP33_V60_AC012

GETtheMANUALS.org

AC031	THERMOPLUNGER No. 3 RELAY

NOTES	Check that the computer is correctly configured using command **LC056 Thermoplungers** There must be no **present** or **stored** faults: Perform this fault finding procedure if there is a fault with the passenger compartment heating - demisting.
	Use the **Wiring Diagram Technical Note, Laguna II ph2, Vel Satis ph2, Espace IV ph2, Mégane II ph2, Scénic II ph2**.

If the Thermoplunger no. 3 relay or **the additional heater interface unit does not function** when command **AC031** is run.
Check the condition of the **thermoplunger 3** relay mounting on the engine fuse box or the additional heater interface unit (see **Wiring Diagram Technical Note**, **Vehicle, component code 1069 or 1550**).
Check the condition of the engine management computer connector (see **Wiring Diagram Technical Note**, **Vehicle, component code 120**).
If the connector or connectors are faulty and if there is a repair procedure (see **Technical Note 6015A, Electrical wiring repair, Wiring: Precautions for repair**), repair the connector, otherwise replace the wiring.

if the fault is still present, check as follows that this relay is controlled by the engine management computer:
Disconnect the thermoplunger no. 3 relay and fit a **50** Ω to **100** Ω resistor on its mounting instead of the coil and connect a voltmeter as follows:
– positive terminal to **+ 12 V battery**,
– negative terminal to connection **3JAB** of component **1069** or **1550**.

Run command **AC031**.

If the voltmeter indicates the battery voltage (4 ON-OFF cycles of **10 seconds**), replace the thermoplunger no. 3 relay.
If the voltmeter does not show the battery voltage (4 ON-OFF cycles of **10 seconds**), contact the Techline.

AFTER REPAIR	Carry out a road test, then check with the **diagnostic tool**.

GETtheMANUALS.org

AC031 CONTINUED	

If the thermoplunger no. 3 relay or **the additional heater interface unit functions using command AC031**, but there is still a passenger compartment heating/demisting problem, use the wiring diagram to check:
– The conformity of the thermoplungers maxi-fuse.
– Check for **+ 12 V battery** feed on connection **BP9** of component **1069** or **1550**.
– Check the conformity of heating element no. 3 relay.
– Check **the continuity** of connection **3JAC or 3JC** between components **1069** or **1550** and **1074**.
– Measure the **resistance** of the thermoplunger*.
– The presence of **earth** on the water chamber (thermoplunger mounting).
– Also check the level of the cooling circuit and that there are no leaks.
Carry out the necessary repairs.

* supplier: ***Champion***: the load resistance is between: **547 mΩ < X < 669 mΩ**.

AFTER REPAIR	Carry out a road test, then check with the **diagnostic tool**.

GETtheMANUALS.org

AC037	PREHEATING RELAY

NOTES	This command is only run if fault **DF025 Preheating unit diagnostic connection** or **DF017 Preheating unit control circuit** is **present** or **stored** and if no other fault is **present**.
	Use the **Wiring Diagram Technical Note, Laguna II ph2, Vel Satis ph2, Espace IV ph2, Mégane II ph2, Scénic II ph2**.
	IMPORTANT: – Please observe the cleanliness guidelines and safety advice. – Make sure the correct type of plug is fitted on the vehicle, **slow** or **fast**: Slow plugs have a black ring Quick plugs have a white ring. For **Vdiag 20, 24, 34, 38** and **74,** if replacing heater plugs by plugs of a different type (see **Replacement of components** and **Replacing heater plugs**).

Before applying the following fault finding procedure, check that the battery voltage is not below 12 V. Otherwise, recharge the battery.

STEP 1:

Using a multimeter fitted with a current clamp, bring together the 4 heater plug supply wires.

Run command **AC037** and measure the current consumed by the 4 heater plugs.

If the value of the current consumed is not between **60 A and 80 A**, move on to step 2, otherwise end of fault finding.

AFTER REPAIR	Carry out a road test, then check with the **diagnostic tool**.

GETtheMANUALS.org

AC037 CONTINUED	

STEP 2:
Check the connections of the preheating unit, component code **257**, the heater plugs, component codes **680, 681, 682** and **683** and the injection computer, component code **120**.
Measure **the resistance** of the heater plugs. If the resistance value is **> 2** Ω, replace the faulty plug or plugs, making sure that the correct plug type, **slow** or **fast**, is fitted on the vehicle.
Check the **continuity** and **absence of interference resistance** of the following connections:
- **37AB** between components **257** and **683**,
- **37AA** between components **257** and **680**,
- **37Z** between components **257** and **681**,
- **37AC** between components **257** and **682.**

If the connection or connections are faulty and there is a repair procedure (see **Technical Note 6015A, Electrical wiring repair, Wiring: Precautions for repair**), repair the wiring, otherwise replace it.

Check the condition of the preheating unit supply fuse **(70 A)** (see **MR 364 (Mégane II ph2), MR 370 (Scénic II ph2), MR 395 (Laguna II ph2), 402 (Vel Satis ph2), 405 (Espace IV ph2) Mechanical, 81C, Fuses, Fuses: List and location of components**).
Check the **+ 12 V battery supply** to the preheating unit on the following connection:
- **BP35** of component **257**.

Check the **continuity** and **absence of interference resistance** of the following connections:
- **3FY** between components **120** and **257**,
- **3FF** between components **120** and **257**.

If the connection or connections are faulty and there is a repair procedure (see **Technical Note 6015A, Electrical wiring repair, Wiring: Precautions for repair**), repair the wiring, otherwise replace it.

If the fault is still present, replace the preheating unit.

AFTER REPAIR	Carry out a road test, then check with the **diagnostic tool**.

GETtheMANUALS.org

AC063	THERMOPLUNGER No. 1 RELAY

NOTES	There must be no **present** or **stored** faults: Perform this fault finding procedure if there is a fault with the passenger compartment heating - demisting.
	Use the **Wiring Diagram Technical Note, Laguna II ph2, Vel Satis ph2, Espace IV ph2, Mégane II ph2, Scénic II ph2**.

If the Thermoplunger no. 1 relay or t**he additional heater interface unit does not function** when command **AC063** is run.
Check the condition of the thermoplunger no. 1 relay mounting connector on the engine fuse box (see **Wiring Diagram Technical Note**, **Vehicle, component code 1067 or 1550**).
Check the condition of the engine management computer connector (see **Wiring Diagram Technical Note**, **Vehicle, component code 120**).
If the connector or connectors are faulty and if there is a repair procedure (see **Technical Note 6015A, Repairing electrical wiring, Wiring: Precautions for repair**), repair the connector, otherwise replace the wiring.

if the fault is still present, check as follows that this relay is controlled by the engine management computer:
Disconnect thermoplunger no. 1 relay, and fit a **50** Ω to **100** Ω resistor on the mounting instead of the coil and connect a voltmeter as follows:
– positive terminal to **+ 12 V** battery,
– negative terminal to connection **3JA** of component **1067** or **1550**.

Run command **AC063**.
If the voltmeter shows the battery voltage (4 ON-OFF cycles of **10 seconds**), replace the thermoplunger no. 1 relay.
If the voltmeter does not show the battery voltage (4 ON-OFF cycles of **10 seconds**), contact the Techline.

AFTER REPAIR	Carry out a road test, then check with the **diagnostic tool**.

GETtheMANUALS.org

AC063 CONTINUED	

If the Thermoplunger no. 1 relay or the additional heater interface unit functions using command AC063, but there is still a passenger compartment heating/demisting problem, check using the wiring diagram:
The conformity of the thermoplunger maxi-fuse.
Check for **+ 12 V battery** on connection **BP9** of component **1067** or **1550**.
Check the conformity of the thermoplunger no. 1 relay or the **additional heater interface unit**.
Check **the continuity** of connection **3JB** between components **1067** or **1550** and **998**.
Measure the **resistance** of the thermoplunger*.
The presence of **earth** on the water chamber (thermoplunger mounting).
Also check the level of the cooling circuit and that there are no leaks.
Carry out the necessary repairs.

* supplier: ***Champion***: the load resistance is between: **547 mΩ < X < 669 mΩ**.

AFTER REPAIR	Carry out a road test, then check with the **diagnostic tool**.

GETtheMANUALS.org

AC064	THERMOPLUNGER No. 2 RELAY

NOTES	There must be no **present** or **stored** faults. Perform this fault finding procedure if there is a fault with the passenger compartment heating - demisting. Consult the **"Wiring diagrams"** Technical Note to locate the relevant fuses and relays.
	Special notes: The thermoplunger no. 2 relay **or the additional heater interface unit supplies** thermoplungers 2 and 3 in parallel.
	Use the **Wiring Diagram Technical Note, Laguna II ph2, Vel Satis ph2, Espace IV ph2, Mégane II ph2, Scénic II ph2**.

If the thermoplunger no. 2 relay does not operate during command **AC064**.
Check the condition of the thermoplunger 2 relay mounting on the engine fuse box **or the additional heater interface unit** (see **Wiring Diagram Technical Note**, **Vehicle, component code 1068 or 1550**).
Check the condition of the engine management computer connector (see **Wiring Diagram Technical Note**, **Vehicle, component code 120**).
If the connector or connectors are faulty and if there is a repair procedure (see **Technical Note 6015A, Repairing electrical wiring, Wiring: Precautions for repair**), repair the connector, otherwise replace the wiring.

if the fault is still present, check as follows that this relay is controlled by the engine management computer:
Disconnect the thermoplunger no. 2 relay, fit a **50** Ω to **100** Ω resistor on its mounting instead of the coil, and connect a voltmeter as follows:
– positive terminal to **+ 12 V battery**,
– negative terminal on connection **3JAA** of component **1068** or **1550**.

Run command **AC064**.
If the voltmeter shows the battery voltage (4 ON-OFF cycles of **10 seconds**), replace the thermoplunger no. 2 relay.
If the voltmeter does not show the battery voltage (4 ON-OFF cycles of **10 seconds**), contact the Techline.

AFTER REPAIR	Carry out a road test, then check with the **diagnostic tool**.

GETtheMANUALS.org

AC064 CONTINUED	THERMOPLUNGER No. 2 RELAY

If thermoplunger no. 2 relay operates with command AC064, but there is still a passenger compartment heating/demisting fault, use the wiring diagram to check:
The conformity of the thermoplunger maxi-fuse.

Check for **+ 12 V battery** on connection **BP91** of component **1068** or **1550**
Check the conformity of thermoplunger no. 2 relay.

Check **the continuity** of connection **3JAD** or **3JD** and **3JAC** between components **1068** or **1550** and **(1072** and **1073)**.
Measure **the resistances** of the thermoplungers*
The presence of **earth** on the water chamber (thermoplunger mounting).
Also check the level of the cooling circuit and that there are no leaks.
Carry out the necessary repairs.

* supplier: ***Champion***: the load resistance is between: **547 mΩ < X < 669 mΩ**.

AFTER REPAIR	Carry out a road test, then check with the **diagnostic tool**.

GETtheMANUALS.org

AC103	EGR BY-PASS

NOTES	Carry out this fault finding procedure when the interpretation of fault **DF304 EGR bypass circuit** has not been resolved.
	Use the **Wiring Diagram Technical Note, Laguna II ph2, Vel Satis ph2, Espace IV ph2, Mégane II ph2, Scénic II ph2**.

Measure the **resistance** between connections **3FB** and **3TP** of component **1301.**

If the resistance of the solenoid valve is not between:
- **43 Ω and 49 Ω** at **+ 25 °C**,
- **32 Ω and 37 Ω** at **- 40 °C**, replace the EGR bypass solenoid valve.

Check the **continuity** and **the absence of interference resistance** on the following connection:
- **3TP** between components **120** and **1301**.

Check the **+ 12 V after relay supply** to the EGR bypass solenoid valve of the following connection:
- **3FB** of component **1301**.

If the connection or connections are faulty and there is a repair procedure (see **Technical Note 6015A, Electrical wiring repair, Wiring: Precautions for repair**), repair the wiring, otherwise replace it.
If you notice no valve movement when running command **AC103**, ensure that the computer output stage is functioning:

Vehicle under + after ignition feed, clear the faults displayed by the diagnostic tool.

AFTER REPAIR	Carry out a road test, then check with the **diagnostic tool**.

GETtheMANUALS.org

AC103 CONTINUED	

With the voltmeter in the direct current position:
With the EGR BYPASS solenoid valve connected, connect the voltmeter earth lead to connection **3TP** of component **1301** and the positive lead to connection **3FB** of component **1301**. Run command **AC103**, the voltmeter should display four successive readings which are approximately equal to the **12 V** battery voltage.

If the voltmeter indicates no control or a continuous voltage, contact the Techline.

If activation has run correctly, check the control vacuum:
– Disconnect the solenoid valve inlet **hose** and connect it to a pressure gauge.
– Start the engine and run it at a stable idle speed.
– If the vacuum does not reach a value between **0.250 bar and 0.550 bar**, check the vacuum circuit from the vacuum pump.

AFTER REPAIR	Carry out a road test, then check with the **diagnostic tool**.

GETtheMANUALS.org

Laguna II ph2, Vel Satis ph2, Espace IV ph2 only.

AC153	HIGH SPEED FAN ASSEMBLY

NOTES	There must be no **present** or **stored** faults: Perform this fault finding after an engine cooling fault. Engine stopped.
	Use the **Wiring Diagram Technical Note for Laguna II ph2, Vel Satis ph2, Espace IV ph2**.

If command **AC153** does not actuate the **high speed fan assembly relay**.
Check the condition of the **high speed fan assembly** relay mounting connectors (see **Wiring Diagram Technical Note**, **Vehicle, component code 597**).
If the connector or connectors are faulty and there is a repair procedure (see **Technical Note 6015A, Electrical wiring repair, Wiring: Precautions for repair**), repair the connector, otherwise replace the wiring.

If the fault is still present, check that the relay is actuated by the engine management computer as follows:
Disconnect the high speed fan assembly relay, fit a **50** Ω to **100** Ω resistor on its mounting in place of the coil, and connect a voltmeter as follows:
– positive terminal to **+ 12 V** battery,
– negative terminal to connection **3JP** of component **234**.

Run command **AC153**.
If the voltmeter shows the battery voltage (4 ON-OFF cycles of **10 seconds**), replace the relay.
If the voltmeter does not show the battery voltage (4 ON-OFF cycles of **10 seconds**), contact the Techline.

If the **high speed fan assembly** relay is supplied using command **AC153**, but there is still a fan assembly actuation fault, use the wiring diagram to check:
The conformity of the fan assembly maxi-fuse.

– Check the **+ 12 V battery supply** to connection **BP71** of component **234**.
– Check the conformity of the **high speed fan assembly** relay.
– Check the **continuity** of connection **49B** between components **234** and **362**.
– Check the conformity of the fan assembly.
– Check for complete **earthing** on connection **MAS** of component **162**.

If the connection or connections are faulty and there is a repair procedure (see **Technical Note 6015A, Electrical wiring repair, Wiring: Precautions for repair**), repair the wiring, otherwise replace it.

AFTER REPAIR	Carry out a road test, then check with the **diagnostic tool**.

EDC16CP33_V18_AC153 / EDC16CP33_V1C_AC153 / EDC16CP33_V54_AC153 / EDC16CP33_V20_AC153 / EDC16CP33_V58_AC153 / EDC16CP33_V5C_AC153 / EDC16CP33_V24_AC153 / EDC16CP33_V04_AC153 / EDC16CP33_V08_AC153 / EDC16CP33_V44_AC153 / EDC16CP33_V4C_AC153 / EDC16CP33_V34_AC153 / EDC16CP33_V38_AC153 / EDC16CP33_V74_AC153 / EDC16CP33_V28_AC153 / EDC16CP33_V26_AC153

GETtheMANUALS.org

Laguna II ph2, Vel Satis ph2, Espace IV ph2 only.

AC154	LOW-SPEED FAN ASSEMBLY

NOTES	There must be no **present** or **stored** faults. Perform this fault finding after an engine cooling fault or air conditioning fault. Engine stopped.
	Use the **Wiring Diagram Technical Note for Laguna II ph2, Vel Satis ph2, Espace IV ph2**.

If, when running command **AC154**, the **low speed fan assembly** relay does not operate:
Check the condition of the **low speed fan assembly** relay mounting connectors (see **Wiring Diagram Technical Note**, **Vehicle, component code 597**).
If the connector or connectors are faulty and if there is a repair procedure (see **Technical Note 6015A, Repairing electrical wiring, Wiring: Precautions for repair**), repair the connector, otherwise replace the wiring.

If the fault is still present, check that the relay is actuated by the engine management computer as follows:
Disconnect the **low speed fan assembly** relay, fit a **50** Ω to **100** Ω resistor on the relay mounting in place of the coil, and connect a voltmeter as follows:
– positive terminal to **+ 12 V** battery,
– negative terminal to connection **3JN** of component **700**.

Run command **AC154**.
If the voltmeter shows the battery voltage (4 ON-OFF cycles of **10 seconds**), replace the relay.
If the voltmeter does not show the battery voltage (4 ON-OFF cycles of **10 seconds**), contact the Techline.

If the **low speed fan assembly** relay is supplied using command **AC154**, but there is still a fan assembly actuation fault, use the wiring diagram to check:
The conformity of the fan assembly maxi-fuse.

– Check **the continuity** of connection **49L** between components **700** and **321**.
– Check the low speed **resistor** (resistance and connections).
– Check **the continuity** of connection **49B** between components **262** and **321**.
– Check for complete **earthing** on connection **MAS** of component **162**.

If the connection or connections are faulty and there is a repair procedure (see **Technical Note 6015A, Electrical wiring repair, Wiring: Precautions for repair**), repair the wiring, otherwise replace it.

AFTER REPAIR	Carry out a road test, then check with the **diagnostic tool**.

GETtheMANUALS.org

ac195	electric coolant pump

NOTES	this command allows you to check the operation of the electric coolant pump.

Check the connection and condition of the coolant pump relay connector, component code **573** and the injection computer connector, component code **120**.

If the connectors are faulty and if there is a repair procedure (see **Technical Note 6015A, Repairing electrical wiring, Wiring: Precautions for repair**), repair the connector, otherwise replace the connector.

Check the **insulation, continuity** and the **absence of interference resistance** on the following connections:

- **3AAZ** between components **573** and **120**,
- **3VH** between components **573** and **369,**
- **3FB** between components **573** and **983**,
- **3FB1** between components **573** and **983**.

If the connection or connections are faulty and there is a repair procedure (see **Technical Note 6015A, Electrical wiring repair, Wiring: Precautions for repair**), repair the wiring, otherwise replace it.

If the fault is still present, contact the techline.

AFTER REPAIR	Carry out a road test, then check with the **diagnostic tool**.

GETtheMANUALS.org

AC225	RAIL PRESSURE REGULATOR

NOTES	Perform this fault finding procedure: – following interpretation of an unresolved fault – following an inconsistency recorded in the parameters, – following a customer complaint (starting problems, engine speed instability, injection noise).

STEP 1

Check the **continuity** and **absence of interference resistance** on the following connection:
- **3RG** between the components **120** and **1198**.

Check the **+ 12 V after relay supply** to the rail pressure regulator **(DRV)** of the following connection:
- **3FB** of component **1198**.

If the connection or connections are faulty and there is a repair procedure (see **Technical Note 6015A, Electrical wiring repair, Wiring: Precautions for repair**), repair the wiring, otherwise replace it.

Run command **AC225**, if you can hear a slight whistling noise and rattling from the pressure regulator, go to **step 2**, otherwise, check the operation of the computer output stage:

Vehicle under + after ignition feed, clear the faults displayed by the diagnostic tool.

With the voltmeter in the direct current position:
With the rail pressure regulator connected, connect the voltmeter earth lead to connection **3RG** of component **1198** and the positive lead to connection **3FB** of component **1198**. Run command **AC225**, the voltmeter should display four successive voltages between **2 V and 2.4 V**.

If the measurement is not correct, contact the Techline.

STEP 2

AFTER REPAIR	Carry out a road test, then check with the **diagnostic tool**.

GETtheMANUALS.org

AC225 CONTINUED	

STEP 2

In the event of rail overpressure:
Check that there are no air bubbles in the diesel fuel low pressure circuit.
Check that the rail pressure sensor is working, and then interpret parameter **PR038 Rail pressure**.
If these checks do not reveal any faults, replace the rail regulator.

in the event of rail underpressure:
Check the correct operation of the rail pressure sensor, as well as the interpretation of parameter **PR038**.
Check the low pressure diesel circuit priming.
Check the conformity of the diesel filter connections.
Check the condition of the filter (clogging and water saturation).
Check that there are no air bubbles between the filter and the high pressure pump.
Check the sealing of the low and high pressure diesel fuel systems: use **ALP6 Fuel circuit leaks** (visual inspections, touch tests, odours, etc.) on:
pump body, pressure release valve, pipes, rail and injectors unions, injector wells, etc.
Check the conformity of the seal fitting on the pressure regulator.
Check the operation of the injectors: run **Test 10 Incorrect injector operation**.

Carry out the necessary repairs.

If the engine starts:

Clear any faults.

Check the rail pressure regulator using **ALP7 Rough idling**.

With the engine warm, leave it to idle for a few minutes (**3** to **5 minutes**):
– If it stalls and the fault reappears, replace the rail pressure regulator.
– If it does not stall, stabilise the engine speed at **2000 rpm (1 minute)** then depress the accelerator fully until the maximum engine speed imposed by the computer is obtained **(~5500 rpm)**. The maximum rotation speed of the engine must be stabilised in the time taken to fully depress and then fully release the pedal. This test is carried out with no load (engine in neutral).
– If the engine stalls, contact the Techline

If the engine does not start or there is no timing, first replace the rail pressure regulator.
If the fault is still present, contact the Techline

AFTER REPAIR	Carry out a road test, then check with the **diagnostic tool**.

GETtheMANUALS.org

AC226	PUMP PRESSURE REGULATOR

NOTES	Perform this fault finding procedure: – following interpretation of an unresolved fault – following an inconsistency recorded in the parameters, – following a customer complaint (starting problems, engine speed instability, injection noise).

STEP 1

Check the **continuity** and **absence of interference resistance** on the following connection:
• **3HI** between the components **120** and **1105**.

Check the **+ 12 V after relay supply** to the pump pressure regulator **(MPROP)** of the following connection:
• **3FB** of component **1105**.

If the connection or connections are faulty and there is a repair procedure (see **Technical Note 6015A, Electrical wiring repair, Wiring: Precautions for repair**), repair the wiring, otherwise replace it.

Run command **AC226**, if you can hear a slight whistling noise and rattling from the pressure regulator, go to **step 2**, otherwise, ensure that the computer output stage is functioning correctly:

Vehicle under + after ignition feed, clear the faults displayed by the diagnostic tool.

With the voltmeter in the direct current position:
With the pump pressure regulator connected, connect the voltmeter earth lead to connection **3HI** of component **1105** and the positive lead to connection **3FB** of component **1105**. Run command **AC226**, the voltmeter must display four successive voltages between **2 V and 2.4 V**.

If the measurement is not correct, contact the Techline.

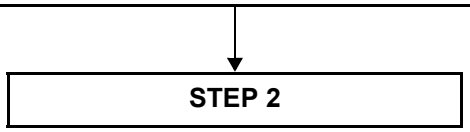

AFTER REPAIR	Carry out a road test, then check with the **diagnostic tool**.

GETtheMANUALS.org

AC226 CONTINUED	

STEP 2

In the event of rail overpressure:
Check that there are no air bubbles in the diesel fuel low pressure circuit.
Check that the rail pressure sensor is working, and then interpret parameter **PR038 Rail pressure**.
If these checks do not reveal any faults, replace the pump regulator.

in the event of rail underpressure:
Check the correct operation of the rail pressure sensor, as well as the interpretation of parameter **PR038**.
Check the low pressure diesel circuit priming.
Check the conformity of the diesel filter connections.
Check the condition of the filter (clogging and water saturation).
Check that there are no air bubbles between the filter and the high pressure pump.
Check the sealing of the low and high pressure diesel fuel systems: use **ALP6 Fuel circuit leaks** (visual inspections, touch tests, odours, etc.) on:
pump body, pressure release valve, pipes, rail and injectors unions, injector wells, etc.
Check the conformity of the seal fitting on the pressure regulator.
Check the operation of the injectors: run **Test 10 Poor injector operation** in this document.

Carry out the necessary repairs.

If the engine starts:

Clear any faults.

Check the pump pressure regulator by applying (see **ALP 7 Rough idle**).

With the engine warm, leave it to idle for a few minutes (**3** to **5 minutes**):
– If it stalls and the fault reappears, replace the pump regulator.
– If the engine does not stall, stabilise the engine speed at **2000 rpm (1 minute)** then depress the accelerator pedal fully until the maximum engine speed imposed by the computer is obtained **(~5500 rpm)**. The maximum rotation speed of the engine must be stabilised in the time taken to fully depress and then fully release the pedal. This test is carried out with no load (engine in neutral).
– If the engine stalls, contact the Techline

If the engine does not start or does not stall, first replace the pump regulator.
If the fault is still present, contact the techline.

AFTER REPAIR	Carry out a road test, then check with the **diagnostic tool**.

GETtheMANUALS.org

MT001	TURBOCHARGING FUNCTION

NOTES	Perform this fault finding procedure: – following the interpretation of a fault concerning the air line which cannot be rectified, – following an inconsistency found in the parameters concerning the air line (turbocharging pressure or inlet air flow), – following a customer complaint (starting faults, engine speed instability, lack of power).

NOTES	This fault finding mode allows you to check dynamically certain mechanical components on the engine. To do this, the engine will run a 4-phase cycle which will enable the entire air line to be checked: air filter, air flowmeter, duct (hoses), air refrigerant, turbocharging pressure sensor, turbocharger, inlet manifold, exhaust manifold and exhaust pipe. This test lasts for approximately **50 seconds**.

Interpretation of test results:
The data recorded during this test is displayed in the DATA section.
- Identify any data which is outside the tolerance range and apply the different Monitool fault finding procedures if necessary.

Introduction:
Engine parameters used during this test:
- **PR055 Engine speed**
- **PR035 Atmospheric pressure**
- **PR059 Inlet air temperature**
- **PR064 Coolant temperature**
- **PR132 Air flow**
- **PR041 Turbocharging pressure**
- **PR051 EGR valve position feedback**

AFTER REPAIR	Carry out a road test, then check with the **diagnostic tool**.

GETtheMANUALS.org

MT001 CONTINUED 1	

Test procedure: the test on the **M9R** engine comprises 4 phases:

	Duration (in **milliseconds**)		Parameter observed
Phase 0	**5000**	Engine conditioning, checking the different systems needed for the test. Engine speed actuation,	
Phase 1	**15000**	Selection of the turbocharger control's minimum stop.	
Phase 2	**15000**	Selection of the turbocharger control's maximum stop.	
Phase 3	**15000**	Selection of the turbocharger control's minimum stop.	

Phase 0 deals with conformity; fault finding data is not recorded during this phase.
The measurements are only taken during phases 1, 2 and 3.

AFTER REPAIR	Carry out a road test, then check with the **diagnostic tool**.

GETtheMANUALS.org

MT001 CONTINUED 2	

PHASE 1:
Preliminary test:
Engine speed between: **2480 rpm < X < 2520 rpm**
Coolant temperature **> 70°C**
EGR valve feedback position **< 1%**

If data from the preliminary checks indicates a non-conformity, check the fuel circuit then contact the Techline.

Interpretation:
If, during phase 1, no data is outside the maximum and minimum limits for each variable, interpret the Monitool analysis for phase 2.

Faults, Values outside the limits	Threshold	Fault finding procedure
Air flow < Minimum threshold	Minimum threshold < Turbocharging pressure < maximum threshold	**Fault finding procedure Monitool no. 1**
	Turbocharging pressure < minimum threshold	**Fault finding procedure Monitool no. 2**
	Turbocharging pressure > maximum threshold	Contact Techline
Air flow > maximum threshold	Minimum threshold < Turbocharging pressure < maximum threshold	**Fault finding procedure Monitool no. 3**
	Turbocharging pressure < minimum threshold	Contact Techline
	Turbocharging pressure > maximum threshold	Contact Techline
Turbocharging pressure < minimum threshold	Minimum threshold < Air flow < maximum threshold	**Fault finding procedure Monitool no. 4**
	Air flow < Minimum threshold	**Fault finding procedure Monitool no. 2**
	Air flow > maximum threshold	Contact Techline
Turbocharging pressure > maximum threshold	Minimum threshold < Air flow < maximum threshold	**Fault finding procedure Monitool no. 5**
	Air flow < Minimum threshold	Contact Techline
	Air flow > maximum threshold	Contact Techline

AFTER REPAIR	Carry out a road test, then check with the **diagnostic tool**.

GETtheMANUALS.org

MT001 CONTINUED 3	

Fault finding procedure Monitool no. 1:
– Check the fitting of the air flowmeter (direction of fitting to be observed).
– Check the tightness of the different air flowmeter clips.
– Check the **+ 5 V supply** of connection **3KJ** of component **799**.
If the connection is faulty and there is a repair procedure (see **Technical Note 6015A, Electrical wiring repair, Wiring: Precautions for repair**), repair the wiring, otherwise replace it.
– Check that there are no air leaks between the air flowmeter and the turbocharger.
– Run **Test 5 Air flowmeter**: check that there is no dust on the sensors.
If the checks do not reveal any non-conformity and the fault is still present, change the air flowmeter. Attach a screen copy of the Monitool results.

Monitool no. 2 fault finding procedure:
– Measure the internal **resistance** of the turbocharger control solenoid valve by applying the interpretation of **DF054 Turbocharging solenoid valve control circuit**.
– Check the connection of all the air hoses and the tightness of the clips.
– Check the condition of the air filter and replace it if necessary.
– Check that the exhaust pipe is not clogged, run **Test 1 Exhaust pipe check**.
– Apply **Test 7 Variable geometry turbocharger control**.
– Check that there are no leaks around the exhaust manifold.
– Check that there is no clogging obstructing the air refrigerant.
– Check that there are no air leaks on the engine (compression test).
If the checks do not reveal any non-conformity and the fault is still present, replace the turbocharger. Attach a screen copy of the Monitool results.

AFTER REPAIR	Carry out a road test, then check with the **diagnostic tool**.

GETtheMANUALS.org

MT001 CONTINUED 4	

Monitool no. 3 fault finding procedure:
– Check the **+ 5 V supply** of connection **3KJ** of component **799**.
If the connection is faulty and there is a repair procedure (see **Technical Note 6015A, Electrical wiring repair, Wiring: Precautions for repair**), repair the wiring, otherwise replace it.
– Run **Test 5 Air flowmeter**: check that there is no dust on the sensors.
If the checks do not reveal any non-conformity and the fault is still present, change the air flowmeter. Attach a screen copy of the Monitool results.

Monitool no. 4 fault finding procedure:
– Check that there are no air leaks between the turbocharger and the inlet manifold.
– Check the tightness of the different clips.
– Check that there are no air refrigerant leaks.
If the checks do not reveal any non-conformity and the fault is still present, change the turbocharging pressure sensor. Attach a screen copy of the Monitool results.

Monitool no. 5 fault finding procedure:
– Check the turbocharging pressure sensor by interpreting the conformity check for **PR041 Turbocharging pressure**.
If the checks do not reveal any non-conformity and the fault is still present, change the turbocharging pressure sensor. Attach a screen copy of the Monitool results.

AFTER REPAIR	Carry out a road test, then check with the **diagnostic tool**.

GETtheMANUALS.org

MT001 CONTINUED 5	

PHASE 2:
Preliminary test:
Engine speed between: **2480 rpm < X < 2520 rpm**
Coolant temperature **> 70°C**
EGR valve feedback position **< 1%**

Interpretation:
If, during phase 2, no data is outside the maximum and minimum limits for each variable, interpret the Monitool analysis for phase 3.

Note: the interpretation of faults during phase 2 should only be carried out in the following situation:
– The variables measured during phase 1 are correct, i.e. they are within the maximum and minimum authorised limits. If this is not the case, apply the different Monitool fault finding procedures which relate to the different faults revealed during the phase 1. To confirm the repairs or modifications carried out, run the **MT001** monitool test again.

Faults, Values outside the limits	Threshold	Fault finding procedure
Air flow < Minimum threshold	Minimum threshold < Turbocharging pressure < maximum threshold	Contact Techline
	Turbocharging pressure < minimum threshold	Contact Techline
	Turbocharging pressure > maximum threshold	Contact Techline
Air flow > maximum threshold	Minimum threshold < Turbocharging pressure < maximum threshold	Contact Techline
	Turbocharging pressure < minimum threshold	Contact Techline
	Turbocharging pressure > maximum threshold	**Fault finding procedure Monitool no. 6**
Turbocharging pressure < minimum threshold	Minimum threshold < Air flow < maximum threshold	Contact Techline
	Air flow < Minimum threshold	Contact Techline
	Air flow > maximum threshold	Contact Techline
Turbocharging pressure > maximum threshold	Minimum threshold < Air flow < maximum threshold	Contact Techline
	Air flow < Minimum threshold	Contact Techline
	Air flow > maximum threshold	**Fault finding procedure Monitool no. 6**

AFTER REPAIR	Carry out a road test, then check with the **diagnostic tool**.

GETtheMANUALS.org

MT001 CONTINUED 6	

Monitool no. 6 fault finding procedure:
– Apply **Test 7 Variable geometry turbocharger control**.
If the checks do not reveal any non-conformity and the fault is still present, replace the turbocharger. Attach a screen copy of the Monitool results.

AFTER REPAIR	Carry out a road test, then check with the **diagnostic tool**.

GETtheMANUALS.org

MT001 CONTINUED 7	

PHASE 3:
Preliminary test:
Engine speed between: **2480 rpm < X < 2520 rpm**
Coolant temperature **> 70°C**
EGR valve feedback position **< 1%**
Interpretation:
If, during phase 3, there is no data outside of the maximum and minimum limits for each variable, then the air line is correct and no component replacement is to be carried out. Check the fuel circuit or deal with **present** or **stored** faults which are displayed on **the diagnostic tool**.
Note: the interpretation of faults during phase 3 should only be carried out in the following situation:
– The variables measured during phase 1 and 2 are correct, i.e. they are within the minimum and maximum authorised limits. If this is not the case, apply the different Monitool fault finding procedures which relate to the different faults revealed during the phase 1 and phase 2. To confirm the repairs or modifications carried out, run the **MT001** monitool test again.

Faults, Values outside the limits	Threshold	Fault finding procedure
Air flow < Minimum threshold	Minimum threshold < Turbocharging pressure < maximum threshold	**Fault finding procedure Monitool no. 7**
	Turbocharging pressure < minimum threshold	**Fault finding procedure Monitool no. 8**
	Turbocharging pressure > maximum threshold	Contact Techline
Air flow > maximum threshold	Minimum threshold < Turbocharging pressure < maximum threshold	Contact Techline
	Turbocharging pressure < minimum threshold	Contact Techline
	Turbocharging pressure > maximum threshold	Contact Techline
Turbocharging pressure < minimum threshold	Minimum threshold < Air flow < maximum threshold	Contact Techline
	Air flow < Minimum threshold	**Fault finding procedure Monitool no. 8**
	Air flow > maximum threshold	Contact Techline
Turbocharging pressure > maximum threshold	Minimum threshold < Air flow < maximum threshold	Contact Techline
	Air flow < Minimum threshold	Contact Techline
	Air flow > maximum threshold	Contact Techline

AFTER REPAIR	Carry out a road test, then check with the **diagnostic tool**.

GETtheMANUALS.org

MT001 CONTINUED 8	

Monitool no. 7 fault finding procedure:
– Check the fitting of the air flowmeter (direction of fitting to be observed).
– Check the tightness of the different air flowmeter clips.
– Check the **+ 5 V supply** of connection **3KJ** of component **799**.
If the connection is faulty and there is a repair procedure (see **Technical Note 6015A, Electrical wiring repair, Wiring: Precautions for repair**), repair the wiring, otherwise replace it.
– Check that there are no air leaks between the air flowmeter and the turbocharger.
– Run **Test 5 Air flowmeter**: check that there is no dust on the sensors.
If the checks do not reveal any non-conformity and the fault is still present, change the air flowmeter. Attach a screen copy of the Monitool results.

Monitool no. 8 fault finding procedure:
– Measure the internal **resistance** of the turbocharger control solenoid valve by applying the interpretation of **DF054 Turbocharging solenoid valve control circuit**.
– Apply **Test 7 Variable geometry turbocharger control**.
If the checks do not reveal any non-conformity and the fault is still present, replace the turbocharger. Attach a screen copy of the Monitool results.

If all the checks do not allow the vehicle to be repaired, contact the Techline.

AFTER REPAIR	Carry out a road test, then check with the **diagnostic tool**.

GETtheMANUALS.org

VP036	INHIBIT FUEL SUPPLY

NOTES	This command enables you to disable the supply to the injectors. This command is carried out with the engine switched off, and ignition on.

This command allows the injectors to be locked, so that starting is not possible.
Command **VP036** allows the engine compressions to be checked in complete safety without disconnecting the connectors of the injectors or the TDC sensor.

Procedure to follow (cylinder no. 1 is located on the timing end):

– Remove **all** of the **heater plugs**, connect the **compression gauge** with the **M9R** flexible end piece, part no. **MOT 1772,** to a cylinder.
– Position the gear lever in neutral (manual gearbox) or to position P (automatic/sequential gearbox).
– Depress the brake pedal and keep it in this position throughout the test.

– Activate command **VP036.**
– Attempt to start the vehicle (within **10 seconds** of activating command **VP036**).

If the vehicle does not start, check the cylinder compressions.

Start the procedure again on another cylinder.

WARNING:
Keep the brake pedal depressed for the length of the test.

This command is inhibited automatically after **10 seconds**.

AFTER REPAIR	Carry out a road test, then check with the **diagnostic tool**.

GETtheMANUALS.org

NOTES	Only refer to the customer complaints after a full check with the **diagnostic tool**.

NO DIALOGUE WITH ENGINE MANAGEMENT COMPUTER	**ALP 1**
STARTING FAULT OR STARTING IMPOSSIBLE	**ALP 2**
POOR PERFORMANCE	**ALP 4**
IRREGULAR ENGINE OPERATION	**ALP 5**
EXTERNAL LEAKS FROM THE FUEL CIRCUIT	**ALP 6**
ROUGH IDLE	**ALP 7**
ENGINE STALLING	**ALP 8**
PARTICLE FILTER WARNING LIGHT COMES ON TOO FREQUENTLY	**ALP 9**

AFTER REPAIR	Carry out a road test followed by a check with the **diagnostic tool**.

GETtheMANUALS.org

ALP1	No dialogue with engine management computer

Use the **Wiring Diagram Technical Note, Laguna II ph2, Vel Satis ph2, Espace IV ph2, Mégane II ph2, Scénic II ph2**.

STEP 1
Check the conformity of the vehicle type, and the domain selected on the tool.

Check that the tool is not faulty by trying to establish dialogue with a computer on another vehicle.
Check **the supply** to the diagnostic socket, component code **225**, of the following connections:
- **BCP4** of component **225 (+ before ignition)**,
- **AP10** of component **225 (+ after ignition)**,
- **NAP** and **MA** of component **225 (earth)**.

Check the conformity of the **after ignition** fuse.
– The conformity of the injection relay mounting.
Check the conformity of the main relay (relay removed):
– **Insulation** between connections **3FB** and **BP37** of component **983** or **1337**.
If the connection or connections are faulty and there is a repair procedure (see **Technical Note 6015A, Electrical wiring repair, Wiring: Precautions for repair**), repair the wiring, otherwise replace it.
– Measure the **resistance** between connections **3AA** and **BP37** of component **983** or **1337**.
If the resistance of the injection relay is not between: **60** Ω **< X < 70** Ω, replace the relay.

Disconnect the engine management computer and check that there are no conducting parts on the computer studs. If this reveals any kind of impurity, rectify it and try to establish dialogue.
If the fault is still present, place the bornier **Elé. 1681** on the engine harness:

Check the **continuity** and **absence of interference resistance** on the following multiplex connections:
- **133B** between components **120** and **225**,
- **133C** between components **120** and **225**.

Check the **+12 V after relay supply** to the engine management computer on the following connections:
- **3FB** of component **120**,
- **3FB1** of component **120**,
- **3FB2** of component **120**.

Check for complete **earthing** on connections **NT** of component **120**.
If the connection or connections are faulty and there is a repair procedure (see **Technical Note 6015A, Electrical wiring repair, Wiring: Precautions for repair**), repair the wiring, otherwise replace it.

AFTER REPAIR	Carry out a road test, then check with the **diagnostic tool**.

GETtheMANUALS.org

ALP1 CONTINUED	

While shunting the "normally open" contact of the supply relay i.e. connections **BP37** and **3FB** of component **983** or **1337**:
- **3FB** of component **120**, (with test shunt)
- **3FB1** of component **120**, (with test shunt)
- **3FB2** of component **120**, (with test shunt)

Check the **continuity** and **absence of interference resistance** of the following connection:
- **3AA** between components **120** and **983** or **1337**.

If the connection or connections are faulty and there is a repair procedure (see **Technical Note 6015A, Electrical wiring repair, Wiring: Precautions for repair**), repair the wiring, otherwise replace it.

Try to establish dialogue with another computer on the same vehicle.

If dialogue is established with **another computer on the same vehicle,** go to **step 2**.
If dialogue is not established **with any other computer on the same vehicle**, (see **88B, Multiplexing, ALP 1**).

STEP 2
Contact the Techline.

AFTER REPAIR	Carry out a road test, then check with the **diagnostic tool**.

GETtheMANUALS.org

ALP2	starting difficult or impossible

NOTES	Before analysing this customer complaint, check that there are no faults, and the conformity (or otherwise) of the parameters and statuses, using the **diagnostic tool**. If the customer complaint is not eliminated, perform the following checks.
	Use the **Wiring Diagram Technical Note, Laguna II ph2, Vel Satis ph2, Espace IV ph2, Mégane II ph2, Scénic II ph2**.

Is it difficult or impossible to start the engine?

Impossible → **PART B**

Difficult ↓

PART A:

If fault **DF308 Clogged particle filter** is **present**, consult the interpretation of **DF308**.
Check the engine **earths**.
If the engine speed is less than **200 rpm**, refer to **Technical Note 6014A, Charging circuit check**, **Starter fault finding, Starter (formerly Technical Note 3632A)**.
If an engine speed of **200 rpm** is achieved with starter motor in operation, **PR055 Engine speed**.
If the engine speed is zero with the **diagnostic tool**:
Measure **the resistance** between connections **3BG** and **3BL** of component **149**.
If the sensor resistance is not between: **600 Ω < X < 1000 Ω**, replace the sensor.

Check the **continuity** and **absence of interference resistance** on the following connections:
- **3BG** between the components **120** and **149**,
- **3BL** between components **120** and **149**.

AFTER REPAIR	Carry out a road test, then check with the **diagnostic tool**.

GETtheMANUALS.org

ALP2 CONTINUED 1	

If the connection or connections are faulty and there is a repair procedure (see **Technical Note 6015A, Electrical wiring repair, Wiring: Precautions for repair**), repair the wiring, otherwise replace it.

Check the conformity of the engine **earths** (oxidation, tightness, etc.).
Check the mounting and condition (overheating) of the sensor.

Check the synchronisation of the camshaft sensors and the engine speed sensors with the display of **ET238 Synchronisation**. If synchronisation is not active, refer to the checks described in **DF195 Camshaft/engine speed sensor consistency**.

Test the high pressure fuel circuit:
Run scenario **SC035 High pressure fuel circuit fault finding**.
To interpret the result, apply the interpretation of command **SC035** (see **Interpretation of commands**).

Check the fuel circuit sealing: run **Test 3 Low pressure circuit check**.
If **Test 3** is correct.
If **Test 3** is not correct, proceed as follows:

Check the conformity of the type of heater plugs configured:

For Vdiag 20, 24, 38 and **74**: consult **ET781 Heater plugs** in the **Ignition/Preheating** subfunction and check the conformity with the type of plugs installed:
– Slow plugs have a black ring.
– Fast plugs have a white ring.
If the heater plugs are being replaced with plugs of a different type (see **Replacement of components, Replacing heater plugs**).

For all Vdiags, check that all **4 plugs have the same colour ring**.

Check that the heater plugs are actuated using the **AC037 Preheating relay** command.
Check the sealing and condition of the inlet circuit: run **Test 4 Turbocharged air inlet circuit check**, and follow the related fault finding procedure (see **Test 4**).

AFTER REPAIR	Carry out a road test, then check with the **diagnostic tool**.

GETtheMANUALS.org

ALP2 CONTINUED 2	

Check that the exhaust is not blocked: run **Test 1 Exhaust pipe check**, and follow the related fault finding procedure (see **Test 4**).

Check the consistency of the signal from the engine coolant temperature sensor.

Check the operation of the rail pressure regulator **(DRV)** using command **AC225 Rail pressure regulator** and then the operation of the pump pressure regulator **(MPROP)** using command **AC226 Pump pressure regulator**.

Check the timing setting.

Apply **part B** of **Test 10 Poor injector operation**.

End of part A.

AFTER REPAIR	Carry out a road test, then check with the **diagnostic tool**.

GETtheMANUALS.org

ALP2 CONTINUED 3	

PART B

If fault **DF308 Clogged particle filter** is **present**, apply the interpretation of **DF308**.

Is there diesel in the tank?

NO → Fill the tank with diesel fuel.
Bleed the low and high pressure diesel circuit.

YES

Does the starter motor work properly?
(Ensure that the engine speed reaches **> ≈ 200 rpm** with the starter in operation, **PR055 Engine speed**)

NO → Refer to **Technical Note 6014A, Charging circuit check, 16A (formerly Technical Note 3455A), Starter fault finding, Starter (formerly Technical Note 3632A)**.

YES

Using the **diagnostic tool**, check the conformity of the immobiliser: **ET003 Immobiliser** must be **INACTIVE**.

ET003 not correct, or warning light permanently on

Consult the fault finding procedure for the immobiliser.

ET003 correct (immobiliser code warning light off)

Continue the fault finding procedure with **Part A** of this fault finding chart.

AFTER REPAIR	Carry out a road test, then check with the **diagnostic tool**.

GETtheMANUALS.org

ALP4	Poor performance

NOTES	Before analysing this customer complaint, check that there are no faults, and the conformity (or otherwise) of the parameters and statuses, using the **diagnostic tool**. If the customer complaint is not eliminated, perform the following checks.

IMPORTANT:
In the event of the engine overheating above **118°C**, the computer deliberately limits the fuel flow (overheating warning light comes on from **115°C**).
– Please observe the cleanliness guidelines and safety advice.

Note:
For the **M9R 724 (Vdiag 5C** and **58)**:
The engine is limited to **3000 rpm** if the vehicle is stationary or if the vehicle speed is less than **4 mph (7 km/h)** and if the engine is warm.

AFTER REPAIR	Carry out a road test, then check with the **diagnostic tool**.

EDC16CP33_V18_ALP04 / EDC16CP33_V1C_ALP04 / EDC16CP33_V54_ALP04 / EDC16CP33_V20_ALP04 / EDC16CP33_V58_ALP04 / EDC16CP33_V5C_ALP04 / EDC16CP33_V24_ALP04 / EDC16CP33_V04_ALP04 / EDC16CP33_V08_ALP04 / EDC16CP33_V44_ALP04 / EDC16CP33_V4C_ALP04 / EDC16CP33_V34_ALP04 / EDC16CP33_V38_ALP04 / EDC16CP33_V74_ALP04 / EDC16CP33_V28_ALP04 / EDC16CP33_V62_ALP04 / EDC16CP33_V26_ALP04 / EDC16CP33_V60_ALP04

GETtheMANUALS.org

ALP4 CONTINUED 1	

Is the engine running on all cylinders? — YES → A

NO ↓

Test the high pressure fuel circuit:
Run scenario **SC035 High pressure fuel circuit fault finding** (see **Interpretation of commands**).
Check that the fuel tank is correctly filled and that the fuel is correct: run **Test 12 Diesel fuel conformity check**.
If the fuel (diesel fuel) used is not correct:
– Replace the fuel (diesel fuel).
– Replace the fuel filter (diesel fuel).
– Bleed the low and high pressure fuel circuit (diesel fuel).

Check that the injectors are correctly fitted (presence and **conformity of the sealing washer**).
– Checking procedure:
– Take a straightedge approximately **40 cm** long and place it on the 4 injectors. The straightedge should rest on the 4 injectors.
– If one or more injector(s) are not in order, remove and check the conformity of the washer.
– If one injector does not touch the straightedge (clearance of more than **1 mm**), remove the injector and check that the washer is present.
Clean the injector well and the injector, refit the injector with the correct sealing washer.

Check the sealing and the condition of the inlet circuit: run **Test 4 Turbocharged air inlet circuit check**.
Check the condition of the air flowmeter: run **Test 5 Air flowmeter**.
Check the turbocharger: run **Test 7 Variable geometry turbocharger control** then **Test 8 Turbocharger rotating part**.

AFTER REPAIR	Carry out a road test, then check with the **diagnostic tool**.

GETtheMANUALS.org

ALP4 CONTINUED 2	

A

YES

Perform the following road test (looking for a loss of power when accelerating under full load):
– in the highest gear ratio, accelerate fully,
– lift your foot off the accelerator pedal completely for at least 2 seconds,
– accelerate fully again,
– release the accelerator pedal completely,
– accelerate slightly.

If the loss of power was not noted during slight acceleration **and** if there was a loss of engine power during **each acceleration at full load**, replace the diesel fuel injector return rail and its overpressure valve (see **MR364 (Mégane II ph2), MR370 (Scénic II ph2), MR 395 (Laguna II ph2), 402 (Vel Satis ph2), 405 (Espace IV ph2) Mechanical, 13B, Diesel injection, Diesel injector fuel return rail: Removal - Refitting**).

Check the connection and positioning of the differential pressure sensor (see **MR 395 (Laguna II ph2), 402 (Vel Satis Ph2), 405 (Espace IV ph2), 364 (Mégane II ph2), 370 (Scénic II ph2) Mechanical, 19B, Exhaust, Particle filter pressure sensor: Removal - Refitting**).

Check the conformity of the accelerator pedal position sensor, the brake pedal sensor, the atmospheric pressure sensor, the exhaust gas recirculation valve, and the damper valve (see **Interpretation of statuses and parameters**).

Check the consistency of the signal from the air flowmeter, the engine coolant temperature sensor, the fuel temperature sensor and the engine speed sensor.

Check the connections, the **continuity** and **the absence of interference resistance** of the following components:
– the air flowmeter (apply **DF056 Air flow sensor circuit**)
– the engine coolant temperature sensor (apply **DF001 Coolant temperature sensor circuit**)
– the fuel temperature sensor (apply **DF098 Fuel temperature sensor circuit**)
– the engine speed sensor (apply **DF195 Engine speed/camshaft sensor consistency**).

AFTER REPAIR	Carry out a road test, then check with the **diagnostic tool**.

GETtheMANUALS.org

ALP4 CONTINUED 3	

Check:
– That the diesel filter is not clogged.
– That there are no leaks on the high and low pressure diesel circuits: run **Test 3 Low pressure circuit check**.
– **Test the high pressure fuel circuit**:
Run scenario **SC035 High pressure fuel circuit fault finding** (see **Interpretation of commands**).

Continue by checking the following:
– The connection of the oil vapour rebreathing circuit.
– The pump pressure regulator (**MPROP**), (jamming - sticking); apply the interpretation of command **AC226 Pump pressure regulator**.
– The rail pressure regulator (**DRV**), (jamming - sticking); apply the interpretation of command **AC225 Rail pressure regulator**.
– Check the engine timing (and the position of the high pressure pump sprocket).
– Check the engine compressions: use a compression gauge, **M9R** hose end piece, part no. **Mot. 1772** and apply command **VP036 Fuel supply inhibition** (see **Interpretation of commands**).

If the fault is still present, contact the techline.

AFTER REPAIR	Carry out a road test, then check with the **diagnostic tool**.

GETtheMANUALS.org

ALP5	Irregular engine operation

NOTES	Before analysing this customer complaint, check that there are no faults, and the conformity (or otherwise) of the parameters and statuses, using the **diagnostic tool**. If the customer complaint is not eliminated, perform the following checks.
	Use the **Wiring Diagram Technical Note, Laguna II ph2, Vel Satis ph2, Espace IV ph2, Mégane II ph2, Scénic II ph2**.

If the engine races during gear changes, if there is a floor mat, check that this is not blocking the accelerator pedal, the brake pedal and the clutch pedal, then check the conformity of the clutch switch and the conformity of the accelerator pedal sensor when the pedal is released (see **PR086 Pedal potentiometer voltage gang 1** and **PR088 Pedal potentiometer voltage gang 2**, Sensor supply).
Measure **the resistance** between connections **3BG** and **3BL** of component **149**.
If the sensor resistance is not between:
741 Ω < X < 905 Ω at **+20°C**, replace the sensor**.**

Check the **continuity** and **absence of interference resistance** on the following connections:
- **3BG** between the components **120** and **149**,
- **3BL** between components **120** and **149**.

If the connection or connections are faulty and there is a repair procedure (see **Technical Note 6015A, Electrical wiring repair, Wiring: Precautions for repair**), repair the wiring, otherwise replace it.

Check the conformity of the engine **earths** (oxidation, tightness, etc.).
Check the mounting and condition (overheating) of the sensor.

Check the low pressure circuit: run **Test 3 Low pressure circuit check**.

Apply the air flow checking procedure, (see **conformity in the interpretation of statuses and parameters**).

Check the turbocharger: apply **Test 7 Variable geometry turbocharger control**.

If the fault is still present, **test the high pressure fuel circuit**:
Run scenario **SC035 High pressure fuel circuit fault finding**.
To interpret the result, apply the interpretation of command **SC035** (see **Interpretation of commands**).

AFTER REPAIR	Carry out a road test, then check with the **diagnostic tool**.

EDC16CP33_V18_ALP05 / EDC16CP33_V1C_ALP05 / EDC16CP33_V54_ALP05 / EDC16CP33_V20_ALP05 / EDC16CP33_V58_ALP05 / EDC16CP33_V5C_ALP05 / EDC16CP33_V24_ALP05 / EDC16CP33_V04_ALP05 / EDC16CP33_V08_ALP05 / EDC16CP33_V44_ALP05 / EDC16CP33_V4C_ALP05 / EDC16CP33_V34_ALP05 / EDC16CP33_V38_ALP05 / EDC16CP33_V74_ALP05 / EDC16CP33_V28_ALP05 / EDC16CP33_V62_ALP05 / EDC16CP33_V26_ALP05 / EDC16CP33_V60_ALP05

GETtheMANUALS.org

ALP6	Fuel system leaks

NOTES	Before analysing this customer complaint, check that there are no faults, and the conformity (or otherwise) of the parameters and statuses, using the **diagnostic tool**. If the customer complaint is not eliminated, perform the following checks. **IMPORTANT:** Please observe the cleanliness guidelines and safety advice.

Procedure for checking for an external leak on the fuel circuit:

Clean away traces of grease with clean thinner and wipe the part or parts concerned with cleaning cloths.
Start the engine and increase the engine temperature until the diesel fuel reaches **40/50°C**.
Stop the engine and check for traces of grease on the part or parts concerned.
If this is the case, replace the part or parts concerned.

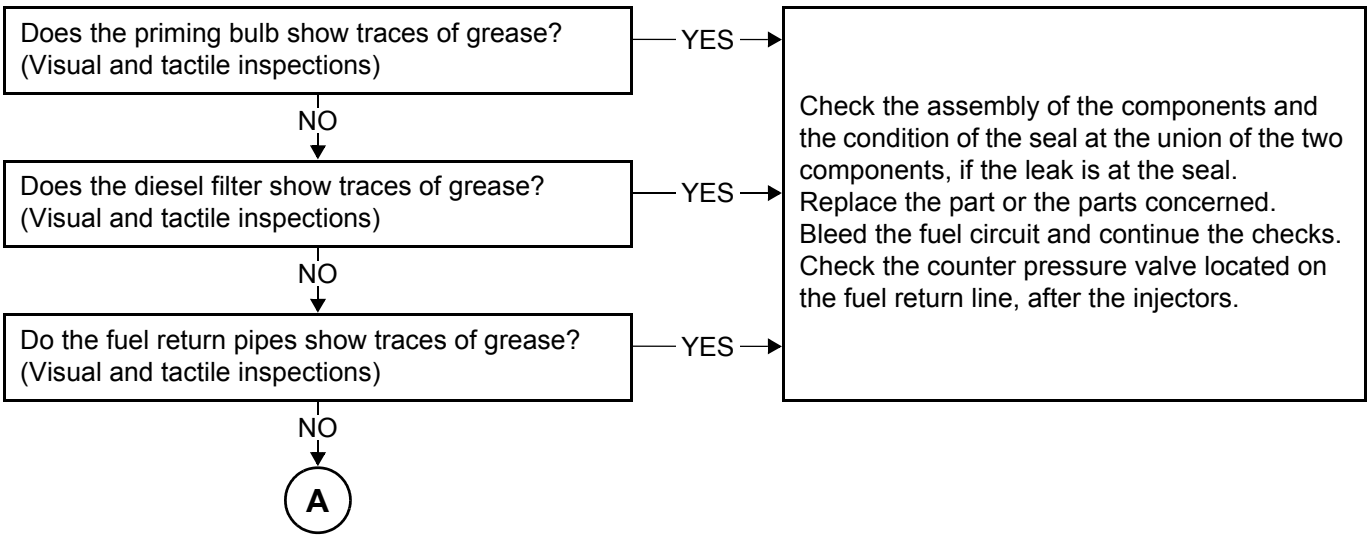

AFTER REPAIR	Carry out a road test, then check with the **diagnostic tool**.

EDC16CP33_V18_ALP06 / EDC16CP33_V1C_ALP06 / EDC16CP33_V54_ALP06 / EDC16CP33_V20_ALP06 / EDC16CP33_V58_ALP06 / EDC16CP33_V5C_ALP06 / EDC16CP33_V24_ALP06 / EDC16CP33_V04_ALP06 / EDC16CP33_V08_ALP06 / EDC16CP33_V44_ALP06 / EDC16CP33_V4C_ALP06 / EDC16CP33_V34_ALP06 / EDC16CP33_V38_ALP06 / EDC16CP33_V74_ALP06 / EDC16CP33_V28_ALP06 / EDC16CP33_V62_ALP06 / EDC16CP33_V26_ALP06 / EDC16CP33_V60_ALP06

GETtheMANUALS.org

ALP6 CONTINUED 1	

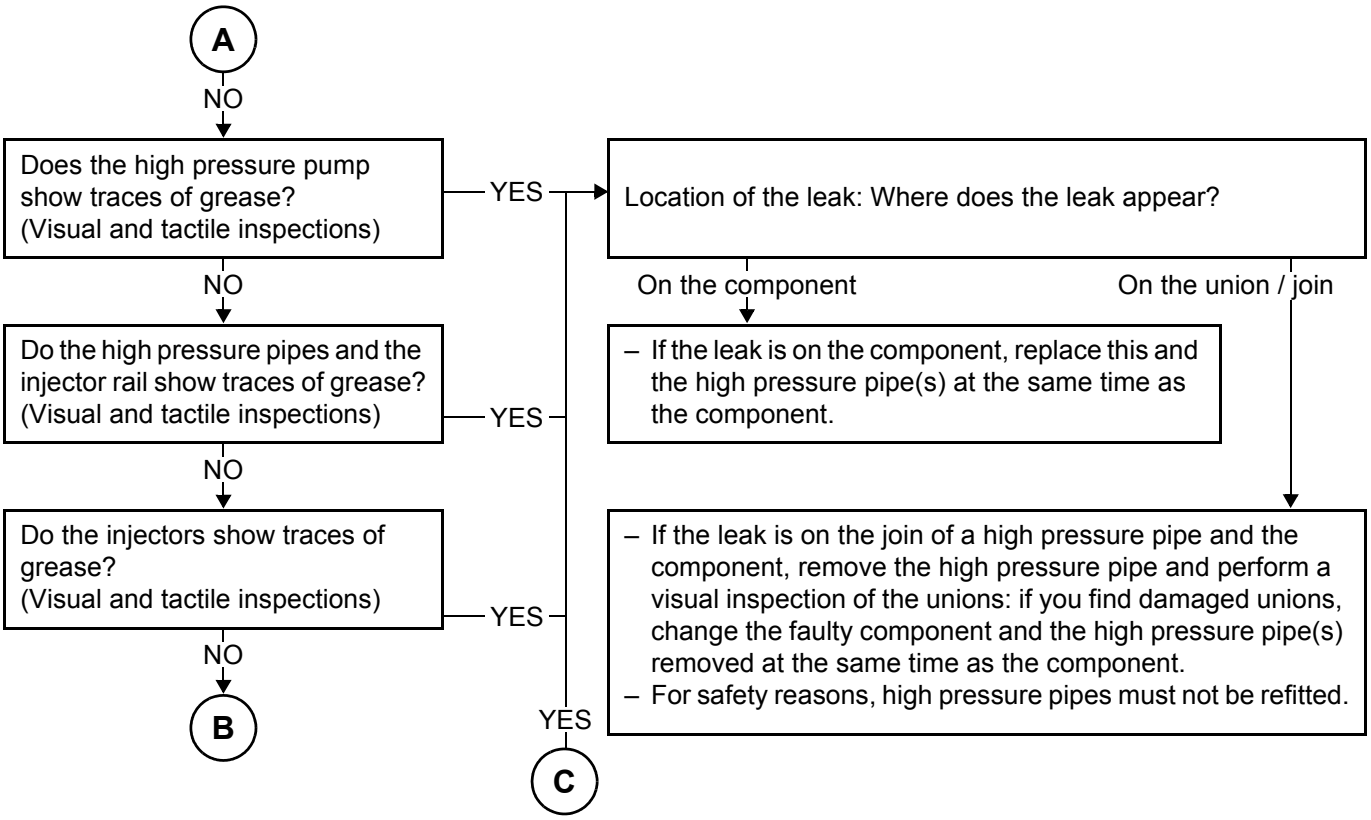

AFTER REPAIR	Carry out a road test, then check with the **diagnostic tool**.

GETtheMANUALS.org

ALP6 CONTINUED 2	

B

NO

– Run command **SC035 High pressure fuel circuit fault finding**.

– While running the test, check that there are no leaks from the high pressure circuit.

Is there a leak from the high pressure circuit? — YES → C

NO

End of fault finding.

Reminder:

Only replace the rail, pump or injector if there is damage to the union and this damage is visible during checks. Bleed the fuel circuit and continue the checks.

AFTER REPAIR	Carry out a road test, then check with the **diagnostic tool**.

GETtheMANUALS.org

ALP7	Rough idle

NOTES	Before analysing this customer complaint, check that there are no faults, and the conformity (or otherwise) of the parameters and statuses, using the **diagnostic tool**. If the customer complaint is not eliminated, perform the following checks.

Check the sealing and the condition of the inlet circuit: run **Test 4 Turbocharged air inlet circuit check**. Check the low pressure circuit: run **Test 3 Low pressure circuit check**.

Check the engine parameters:

- Check the update of the engine management computer calibration (last calibration).
- Check the conformity of the **IMA*** codes (see **Interpretation of commands, SC002 Enter injector codes**).

Check the charging circuit using **Technical Note 6014A, Charging circuit check, Alternator fault finding, 16A, Alternator (formerly Technical Note 3455A)**.

- Check that the engine speed signal is correct using an oscilloscope: no interference, broken tooth, etc.
- If not correct, check:
- The wiring.
- The flywheel position and the condition of the flywheel teeth.
- Check the position and tightness of the engine speed sensor.

- Check the connections and wiring of the injectors.
- Check the connections and wiring of the engine management computer to the injectors.

Check the high pressure circuit (external leaks).
(see the end of the **Fuel circuit external leaks** fault finding chart)

A

AFTER REPAIR	Carry out a road test, then check with the **diagnostic tool**.

EDC16CP33_V18_ALP07 / EDC16CP33_V1C_ALP07 / EDC16CP33_V54_ALP07 / EDC16CP33_V20_ALP07 / EDC16CP33_V58_ALP07 / EDC16CP33_V5C_ALP07 / EDC16CP33_V24_ALP07 / EDC16CP33_V04_ALP07 / EDC16CP33_V08_ALP07 / EDC16CP33_V44_ALP07 / EDC16CP33_V4C_ALP07 / EDC16CP33_V34_ALP07 / EDC16CP33_V38_ALP07 / EDC16CP33_V74_ALP07 / EDC16CP33_V28_ALP07 / EDC16CP33_V62_ALP07 / EDC16CP33_V26_ALP07 / EDC16CP33_V60_ALP07

GETtheMANUALS.org

ALP7 CONTINUED	

A

– Check the engine timing (and the position of the high pressure pump sprocket).

– Apply **part B** of **Test 10 Poor injector operation**.
Check the lower engine:
– Check the engine mountings.
If the checks are correct, contact the Techline.

If fault **DF308 Clogged particle filter** is **present**, consult the interpretation of **DF308**.
Run command **SC036 Reinitialise programming** and select **After particle filter replacement** (see **Interpretation of commands**).

IMA*: Individual injector correction

AFTER REPAIR	Carry out a road test, then check with the **diagnostic tool**.

GETtheMANUALS.org

ALP8	Engine stalling

NOTES	Before analysing this customer complaint, check that there are no faults, and the conformity (or otherwise) of the parameters and statuses, using the **diagnostic tool**. If the customer complaint is not eliminated, perform the following checks.

Apply the interpretation of fault **DF569 Turbocharging circuit** to deal with **ALP8**.

AFTER REPAIR	Carry out a road test, then check with the **diagnostic tool**.

EDC16CP33_V18_ALP08 / EDC16CP33_V1C_ALP08 / EDC16CP33_V54_ALP08 / EDC16CP33_V20_ALP08 / EDC16CP33_V58_ALP08 / EDC16CP33_V5C_ALP08 / EDC16CP33_V24_ALP08 / EDC16CP33_V04_ALP08 / EDC16CP33_V08_ALP08 / EDC16CP33_V44_ALP08 / EDC16CP33_V4C_ALP08 / EDC16CP33_V34_ALP08 / EDC16CP33_V38_ALP08 / EDC16CP33_V74_ALP08 / EDC16CP33_V28_ALP08 / EDC16CP33_V62_ALP08 / EDC16CP33_V26_ALP08 / EDC16CP33_V60_ALP08

GETtheMANUALS.org

ALP9	PARTICLE FILTER WARNING LIGHT COMES ON TOO OFTEN

NOTES	Before dealing with this customer complaint, check that there are no faults except **DF312 Speed request**, and the conformity (or otherwise) of the "parameters" and "statuses" using the **diagnostic tool**. Deal with the other faults first. If the customer complaint is not eliminated, perform the following checks.

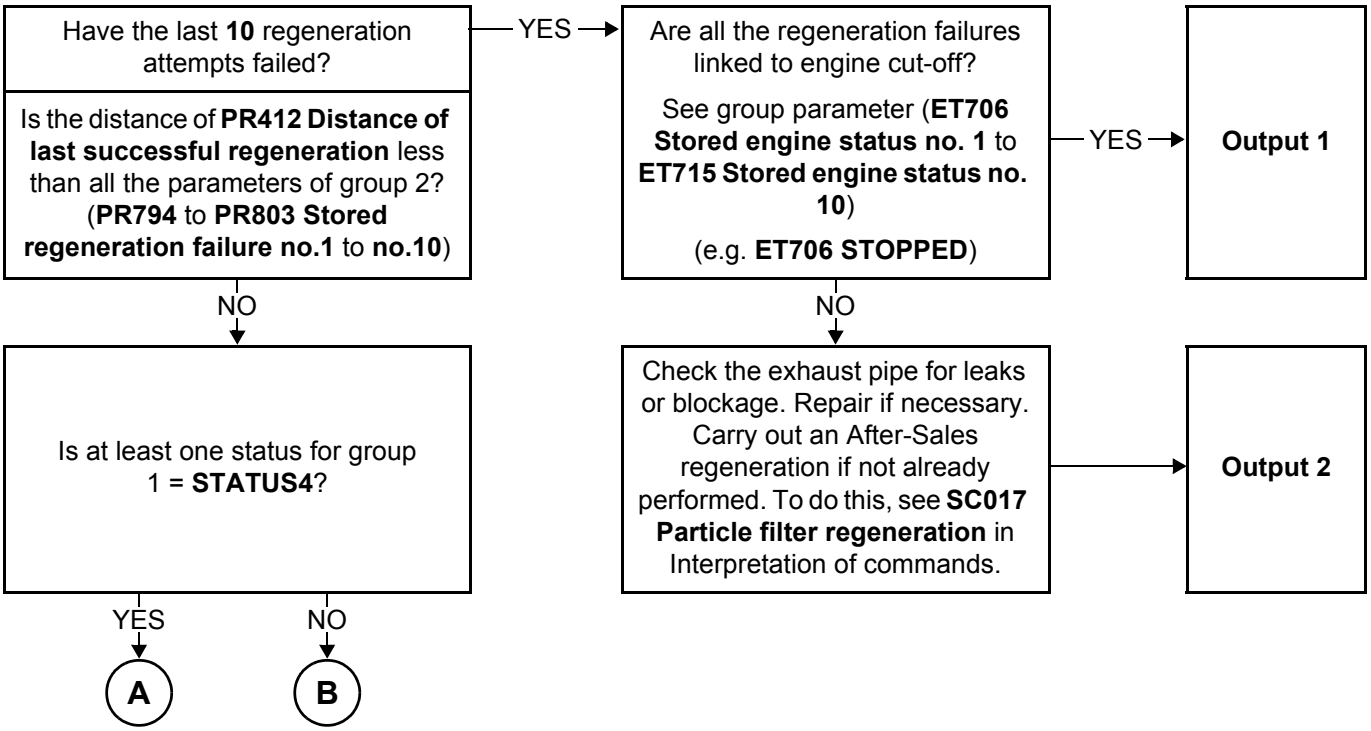

AFTER REPAIR	Carry out a road test, then check with the **diagnostic tool**.

GETtheMANUALS.org

ALP9 CONTINUED 1	

(A) YES

Recognition of parameters corresponding to the start of successful regenerations. Make adjustments to align the parameter groups.

Group 1 Stored regeneration start no. 1 to 10
and
Group 2 Stored regeneration failure no. 1 to 10

For each **group 1** parameter, if there is no **group 2 parameter in the next 30 miles (50 km)**, note that this means a successful regeneration (R). If there is one, this means a failure (e).

Vdiag 20, 5C, 24 and 58 → (C)

Vdiag 54, 18, 1C → (D)

(B) NO

Symptom not confirmed

Note **group 1** here:	Note **group 2** here:	Type of regeneration
PR816: ___ ET742 ___ PR817: ___ ET743 ___ PR818: ___ ET744 ___ PR819: ___ ET745 ___ PR820: ___ ET746 ___ PR821: ___ ET747 ___ PR822: ___ ET748 ___ PR823: ___ ET749 ___ PR824: ___ ET750 ___ PR825: ___ ET751 ___	PR794: _____ PR795: _____ PR796: _____ PR797: _____ PR798: _____ PR799: _____ PR800: _____ PR801: _____ PR802: _____ PR803: _____	PR816: R E PR817: R E PR818: R E PR819: R E PR820: R E PR821: R E PR822: R E PR823: R E PR824: R E PR825: R E

AFTER REPAIR	Carry out a road test, then check with the **diagnostic tool**.

GETtheMANUALS.org

ALP9 CONTINUED 2

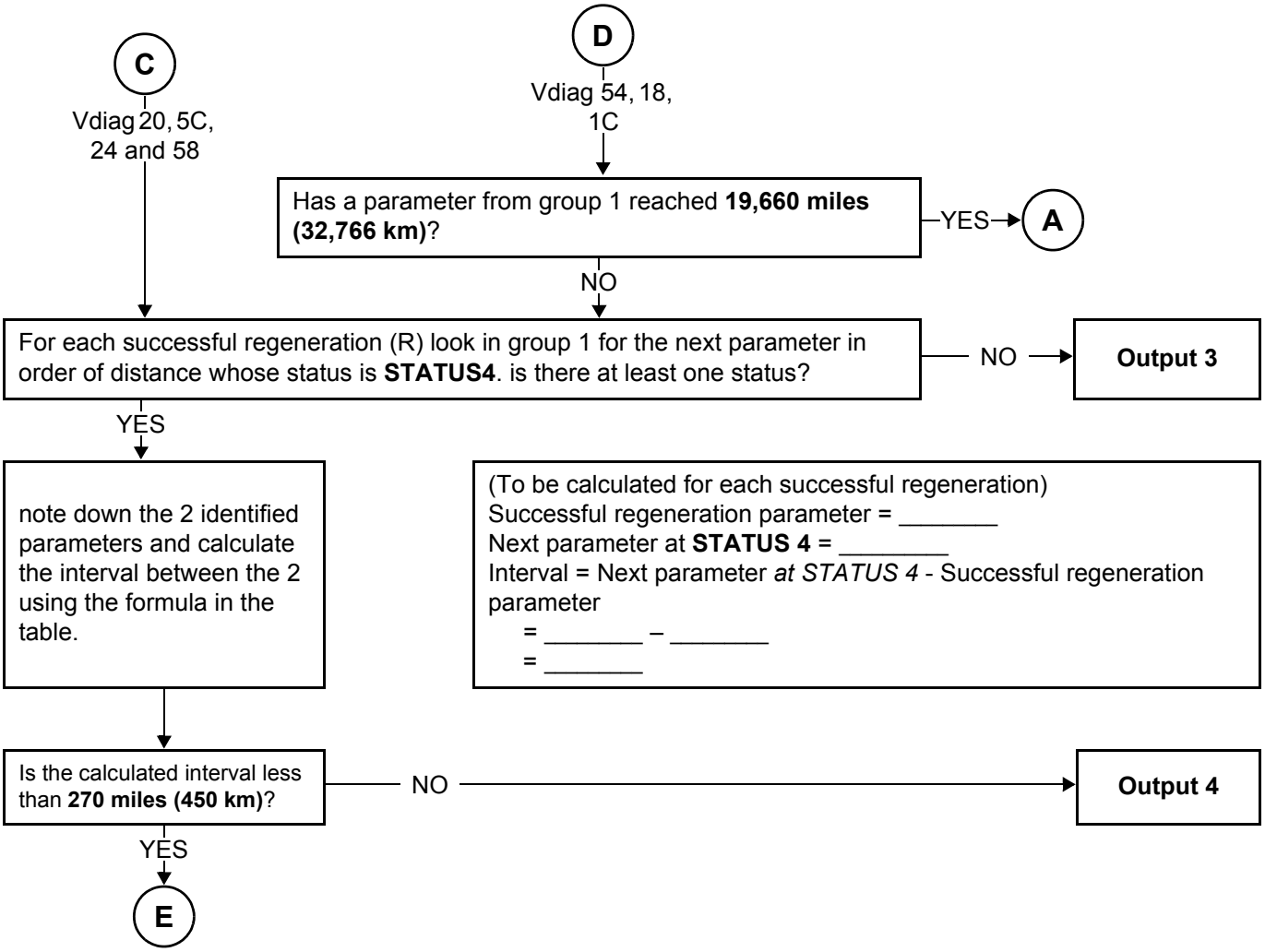

AFTER REPAIR	Carry out a road test, then check with the **diagnostic tool**.

GETtheMANUALS.org

ALP9 CONTINUED 3	

E

YES

- Check the consistency between the **IMA*** codes entered and the codes engraved on the injector bodies.
- Check that the particle filter differential pressure sensor is correctly positioned and connected (see **MR 395, 402, 405, 364 or 370 Mechanical, 19B Exhaust, Particle filter pressure sensor: Removal - Refitting**),
- Check the exhaust pipe (see **TEST1 Exhaust pipe check**),
- Check the air inlet circuit (see **TEST4 Turbocharged air inlet circuit check**),
- Check the air flowmeter (see **TEST5 Air flowmeter**),
- Check the turbocharger (see **TEST7 Variable geometry turbocharger check**),
- Check the injectors (see **TEST10 Poor injector operation**),
- Check the cylinder compressions.

If the fault has not been located and the customer complaint is still present, contact the Techline.

IMA*: Individual injector correction

AFTER REPAIR	Carry out a road test, then check with the **diagnostic tool**.

GETtheMANUALS.org

ALP9 CONTINUED 4	

Analysis of output for **ALP9**.

ALP output no.	Output conditions for ALP9	Cause - type of driving	Regeneration frequency	What to tell the customer?
Output 1	The last 10 regeneration attempts have failed due to the engine cutting out.	Regeneration failures caused by **engine cut-off**.	No regeneration frequency analysis.	Explain to the customer the need to wait until the end of regeneration (warning light goes out) before switching off the engine.
Output 2	The last 10 regeneration attempts have failed but not because of the engine cutting out.	**Unsuitable driving conditions.**	No regeneration frequency analysis.	Explain again to the customer the driving criteria for when the warning light comes on.
Output 3	After successful regenerations stored in the memory, the warning light did not come on. No interval can be calculated.	Since the last successful stored regenerations, the driving conditions have not allowed the warning light to come on.	Should be normal	Vehicle correct
Output 4	The interval between a successful regeneration and the particle filter warning light coming on is correct (above the lowest possible values). The system does not have any irregular components.	Unfavourable driving (urban zone, underspeed, etc.)	Normal	Vehicle correct

AFTER REPAIR	Carry out a road test, then check with the **diagnostic tool**.

GETtheMANUALS.org

EXHAUST SYSTEM CHECK	TEST1
RESOLVING MISFIRES	TEST2
LOW PRESSURE CIRCUIT CHECK	TEST3
TURBOCHARGED AIR INLET CIRCUIT CHECK	TEST4
AIR FLOW SENSOR	TEST5
FUEL RETURN RAIL VALVE CHECK	TEST6
VARIABLE GEOMETRY TURBOCHARGER CONTROL	TEST 7: Apply TEST 4 of Technical Note 3419*
ROTATING PART OF TURBOCHARGER	TEST 8: Apply TEST 7 of Technical Note 3419*
POOR INJECTOR OPERATION	TEST10
TEMPERATURE UPSTREAM OF TURBINE TOO LOW	TEST11
DIESEL FUEL CONFORMITY CHECK	TEST12

*Technical Note 3419: Fault finding on the turbocharger for petrol and diesel engines.

GETtheMANUALS.org

TEST1	Exhaust system check

Engine stopped: Check that the silencer outlet is not blocked. Repair or replace the silencer, if necessary.

↓

Check the seal of the exhaust manifold on the contact surface between the turbocharger and the exhaust manifold.
Is the seal in order?

NO → Repair or replace the faulty part.

YES ↓

Loosen the catalytic converter on the turbocharger side.
Place a wooden block between the two parts.
Start the vehicle and check if the engine runs better.
Is the engine running normally?

NO → The exhaust system is not the cause of the fault; repeat the engine fault finding (see **Customer complaints - Fault finding chart**).

YES ↓

Retighten the catalytic converter.
Loosen or separate the particle filter on the catalytic converter side. Place a wooden block between the two parts if necessary.
Start the vehicle and check if the engine runs better.
Is the engine running normally?

NO → Replace the catalytic converter.

YES ↓

(A)

GETtheMANUALS.org

TEST1 CONTINUED	

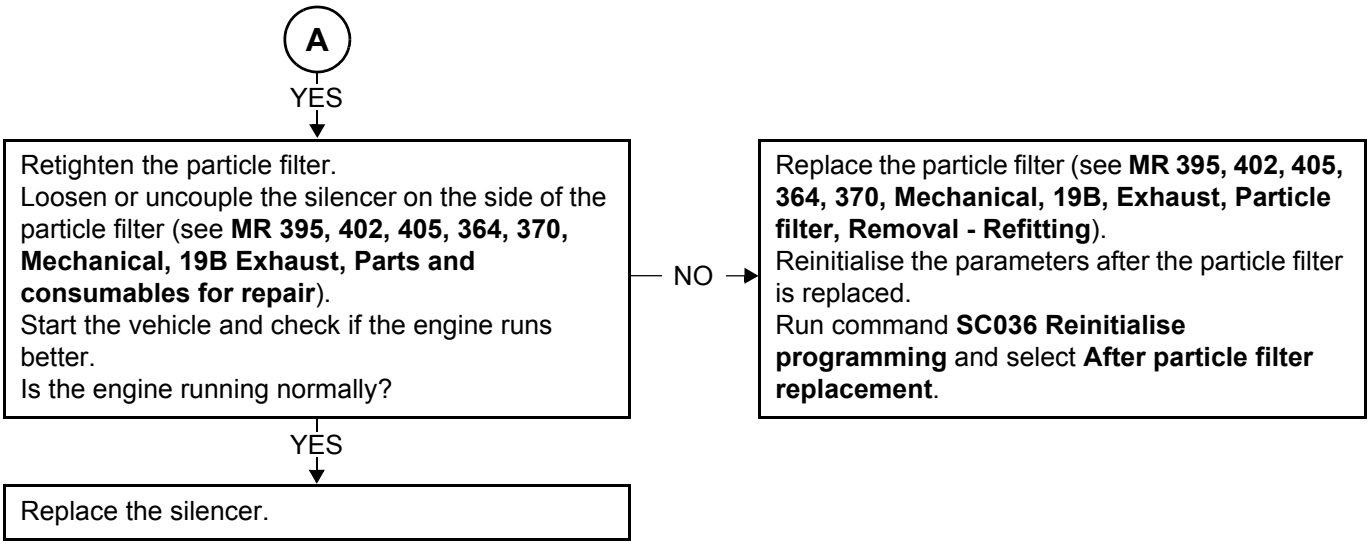

GETtheMANUALS.org

TEST2	Resolving misfires

Check for faults **DF059 Misfire on cylinder 1, DF060 Misfire on cylinder 2, DF061 Misfire on cylinder 3, DF062 Misfire on cylinder 4, DF065 Misfire** using the diagnostic tool.

↓

Run a compression test using the **M9R** flexible end piece, part number Mot. 1772 and apply command **VP036 Fuel supply inhibition** (see Interpretation of commands).
Are the values obtained correct?

NO → Check the mechanical conformity of the valves, heater plugs and segments.

YES ↓

Clear the faults, start the engine and leave the engine running at idle speed for 1 minute.
Check for faults **DF059, DF060, DF061, DF062, DF065** using the diagnostic tool.
Are there any faults remaining?

NO → End of test.

YES ↓

Change the faulty injector to another position.
Did the fault follow the injector to its new location?

NO → Put the injectors back in their initial positions.

YES ↓

(A)

EDC16CP33_V18_TEST2 / EDC16CP33_V1C_TEST2 / EDC16CP33_V54_TEST2 / EDC16CP33_V20_TEST2 / EDC16CP33_V58_TEST2 / EDC16CP33_V5C_TEST2 / EDC16CP33_V24_TEST2 / EDC16CP33_V04_TEST2 / EDC16CP33_V08_TEST2 / EDC16CP33_V44_TEST2 / EDC16CP33_V4C_TEST2 / EDC16CP33_V34_TEST2 / EDC16CP33_V38_TEST2 / EDC16CP33_V74_TEST2 / EDC16CP33_V28_TEST2 / EDC16CP33_V62_TEST2 / EDC16CP33_V26_TEST2 / EDC16CP33_V60_TEST2

GETtheMANUALS.org

TEST2 CONTINUED	

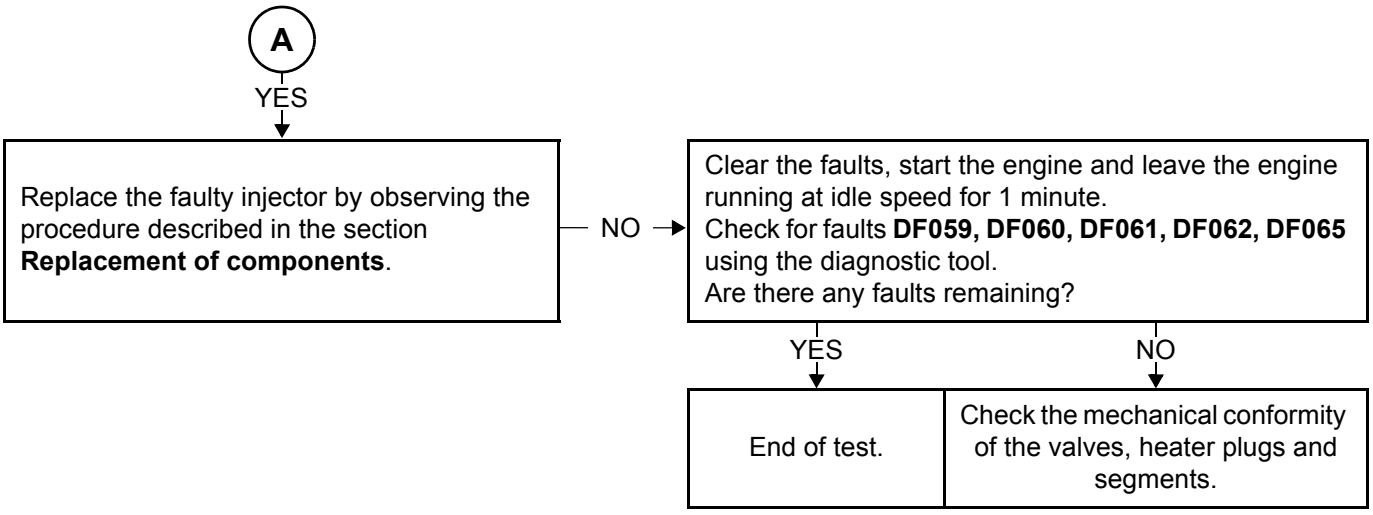

GETtheMANUALS.org

TEST3	Low pressure circuit check

Check the fuel filter:
– Conformity of the fuel filter (correct part number and **RENAULT** filter).
– Positioning and degree of clogging of the filter cartridge.
– Positioning and condition of the seals.
– If there is metal swarf in the filter:
Replace the fuel filter, bleed the circuit and **continue the fault finding procedure**.

Supplying the injection system with fuel from an additional tank.

This operation aims to detect possible faults in the low pressure supply system of a vehicle by replacing it entirely with an additional tank.

Mode:

– Disconnect the diesel fuel supply pipe at the fuel filter inlet and block it with a plug.
– Connect a pipe to the fuel filter inlet and insert the other end in a **clean** container with a capacity of approximately **5 litres**.
– Disconnect the diesel fuel return pipe at the diesel temperature sensor (pump return and injector return join), and block it using a plug.
– Connect a transparent pipe to the union of the diesel fuel temperature sensor, and insert the other end in the container.
– Fill the container with **clean** diesel fuel.
– Start the engine and let the system drain itself of its air (there must not be any air bubbles in the return pipe).

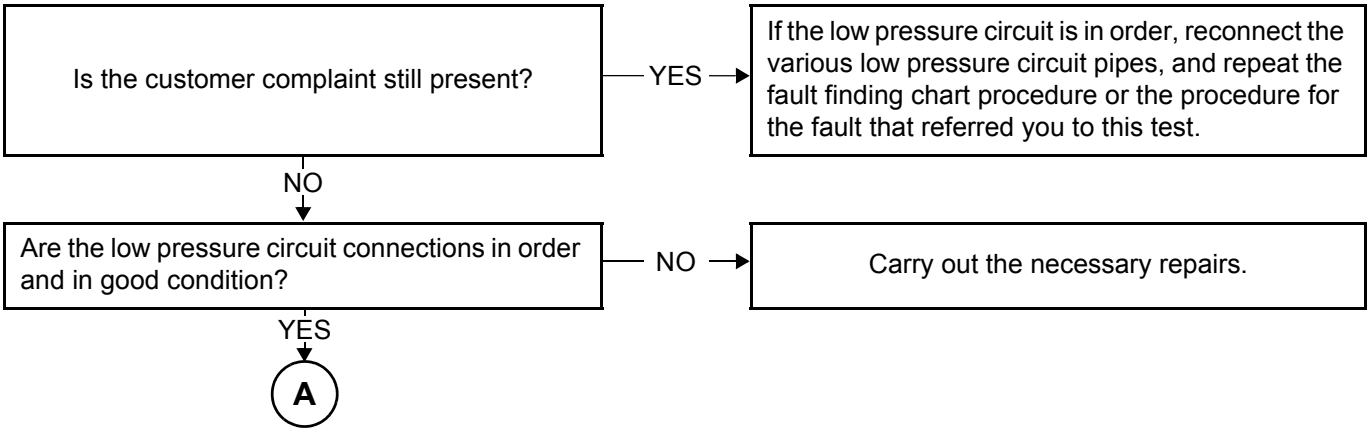

GETtheMANUALS.org

TEST3 CONTINUED	

A

YES

Check the condition and operation of the priming bulb. Perform repairs if necessary and continue the test.

Check the condition of all the low pressure diesel pipes from the tank to the injection pump (in particular no pinching of pipes).

If the fault is still present with a low fuel level, check the consistency of the actual fuel level and that indicated on the instrument panel.
The transfer pump is supplied via a Venturi pipe located underneath it.
Check that the opening of the venturi (**6 mm** to **8 mm** in diameter) is not blocked by dirt contained in the fuel tank.

Check the priming of the low pressure diesel circuit.

Check that the fuel tank is correctly filled and that the fuel is correct (see **Test 12 Diesel fuel conformity check**).
If the diesel fuel is not correct:
– Replace the fuel (diesel fuel).
– Replace the fuel filter (diesel fuel).
– Bleed the low and high pressure fuel circuit (diesel fuel).

Low pressure circuit correct.

GETtheMANUALS.org

TEST4	Turbocharged air inlet circuit check

Engine stopped: Check the **sealing** (leak or air intake) of the low and high pressure air circuit (before/after turbocharger).

↓

Check the parts that are abnormally greasy of the circuit and reveal a lack of tightness.
Check:
– the condition and fitting of the ducts (foreign, clogged, not joined, kinked, broken, pierced, cut bodies, tightness of the mounting bolts, etc.).
– the presence, condition and fitting of the seals.
– the present and tightening of the clamps.
– The fitting of the turbocharging pressure sensor.
– The pipes and the take-off point between the air duct and the turbocharging sensor.

Carry out the necessary repairs.

↓

Check the air filter.

↓

Check:
– That the inlet and outlet of the air filter unit is not blocked.
– the condition and the assembly of the air filter unit (disconnected, broken, pierced …).
– The cleanliness, the conformity and the non-distortion of the filter element.
– The air flowmeter: run **Test 5 Air flowmeter.**

Carry out the necessary repairs

↓

Check:
– the condition of the damper valve,
– the tightening of the mounting bolts,
– cracks in the damper valve.

Carry out the necessary repairs.

↓

A

GETtheMANUALS.org

TEST4 CONTINUED	Turbocharged air inlet circuit check

A

Check that there is no leak at the exhaust manifold, in particular at the exhaust manifold/turbocharger connection.
Check the exhaust, run **Test 1 Exhaust pipe check**.
Carry out the necessary repairs.

Visually check the EGR circuit sealing.

Note:
The operational clearance of the EGR exchanger flap shaft leaves slight traces of a black substance due to inconsequential leakage. Do not replace this part.

– Check the condition of the intercooler:
– clogging,
– leaks (vehicle stationary, stabilise the engine speed between **3500 rpm** and **4000 rpm** and check that there are no leaks).

Replace if necessary.

Check that the turbocharging pressure sensor take-off point is not blocked.
Carry out the necessary repairs

END OF TEST.

GETtheMANUALS.org

TEST5	Air flowmeter

Damage to electrical components

Visual inspection: remove the flow sensor - the components should not be broken.

Replace the air flowmeter if necessary.

Oxidation of the electrical components

Visual inspection: remove the air flowmeter, there should not be any greenish deposits on the electrical components.

Replace the air flowmeter if necessary.

Clogging of the air flowmeter

Test:
– Check the values for conformity:
– During the first 5 seconds after starting,
– **PR064 Coolant temperature**: **80°C.**
– **PR055: Engine speed**: idling.
– **PR059: Air temperature** between **30** and **70°C**.
– **PR146 Inlet air flow**: between **20** and **28 kg/h**.
– **PR220 EGR valve OCR***: between **22** and **30%**.
– **PR132 Air flow**: between **20** and **28 kg/h**.
– **PR051 EGR valve position feedback:** between **22** and **30%**.
– **PR023 Air flow difference** between **- 50** and **+ 50 mg/stroke**.
– Apply the procedure for **DF056 Air flow sensor circuit** for the checks on the air flowmeter.

Replace the air flowmeter if necessary.

END OF TEST.

OCR*: Opening Cyclic Ratio

GETtheMANUALS.org

TEST6	Fuel return rail valve check

This test consists of creating a vacuum downstream of the anti-return valve of the injector return rail and checking whether fuel is drawn in by the valve.

Fitting:
Remove the rail protector.
Disconnect the union of the return rail on injector 4 (on the gearbox side).
Disconnect the union downstream of the anti-return valve.
Connect the **8 mm** quick-release coupling.
Connect a transparent hose (resistant to diesel, length **60 cm** and internal diameter **8 mm**).
Connect a manual vacuum pump.

Gradually apply a vacuum up to **0.5 bar**.
If **more than a cm** of diesel is quickly drawn into the hose, the valve is leaking. Stop the vacuum immediately.
Replace the diesel injector fuel return rail and its overpressure valve (see **MR364 (Mégane II ph2), MR370 (Scénic II ph2), MR 395 (Laguna II ph2), MR 402 (Vel-Satis ph2), MR405 (Espace IV ph2) Mechanical, 13B, Diesel injection, Diesel injector fuel return rail: Removal - Refitting**).

Otherwise, maintain the vacuum for **1 minute**.
If **less than a cm** of diesel is drawn into the hose, the valve of the rail is not leaking.
End of test.

GETtheMANUALS.org

TEST10	Incorrect injector operation

Part A (for VDiag 18, 04 and 44):

Fuel regulation balance check for each injector (individual correction):
– In the **CLIP diagnostic tool**, choose the **Fuel circuit** subfunction.
– With the engine idling and the fuel temperature **> 50°C**, view the flow correction values of each injector (individual correction), i.e.:
– PR364 Cylinder no. 1 fuel flow correction;
– PR405 Cylinder no. 2 fuel flow correction;
– PR406 Cylinder no. 3 fuel flow correction;
– PR365 Cylinder no. 4 fuel flow correction.

The **normal value** for flow correction for an injector is approximately **X = ±1.5 mg/stroke**. This tolerance value may increase with time, but indicates an injector / cylinder fault if it exceeds **X = ±5 mg/stroke**.

Check the **IMA*** injector codes, by comparing the **IMA** codes engraved on the injectors (the **IMA** codes are read from left to right) and the **IMA** codes read with the **diagnostic tool**. If the **IMA** codes are correct, continue the fault finding procedure, if not, enter the incorrect **IMA** codes using command **SC002 Enter injector codes** (see **Interpretation of commands**).

1- If at least one of these values is X > + 5 mg/stroke

– Check the valve clearance.
– Check the condition of the engine and test the compressions. Use a compression gauge, the **M9R** hose end piece, part number **Mot.1772** and apply command **VP036 Fuel supply inhibition** (see **Interpretation of commands**).
– If the compression test reveals a cylinder fault, carry out the necessary repairs.
– If the compression is correct, check the injector fitting conforms according to the procedure (see **MR 402 (Vel Satis ph2), MR 395 (Laguna II ph2), MR 364 (Mégane II ph2), MR 370 (Scénic II ph2) or MR 405 (Espace IV ph2) Mechanical, 13B, Diesel injection, Diesel injectors: Removal - Refitting**).
– Check the fuel regulation again for each injector (individual correction).
– If the customer complaint is still present, replace the injector* concerned.
– See paragraph **Part C: Confirmation of flow correction fault finding for each injector**, for confirmation of the fault finding.

IMA*: Individual injector correction

GETtheMANUALS.org

TEST10 CONTINUED 1	

2. If at least one of these values is X < - 5 mg/stroke

– Check the valve clearance.
– Check the level and condition of the engine oil.
– Remove the injector with the largest adjustment.
– If there is contamination via the diesel, check the condition of the cylinder concerned (cylinder, piston, valves).
– Replace the injector* concerned.
– See paragraph **Part C**, for confirmation of the fault finding.

3. If at least one of these values does not stabilise (20 seconds after starting):

– Check the low pressure circuit using **Test 3 Low pressure circuit test**.
– Check the fuel is correct by carrying out **Test 12 Diesel fuel conformity check**.
See paragraph **Part C of Test 10**, for confirmation of the fault finding.

After replacing an injector, follow the injector code programming procedure (see **Replacement of components**), run **SC036 Reinitialise programming** and select the number of the injector replaced.

IMPORTANT:
When removing / refitting injectors, follow the cleanliness and safety instructions (see **MR 395 (Laguna II ph2), 402 (Vel Satis), 405 (Espace IV Ph2), 364 (Megane II ph2), 370 (Scenic II ph2) Mechanical, 13B, Diesel injection, Diesel injectors: Removal - Refitting**).

GETtheMANUALS.org

TEST10 CONTINUED 2	

Part B (except VDiag 18, 04 and 44):

Run **SC031 Cylinder operational fault finding**.
Is **SC031** correct?

NO → Check the engine compressions: use a compression gauge, **M9R** hose end piece, part no. **Mot. 1772** and apply command **VP036 Fuel supply inhibition** (see **Interpretation of commands**).

Run compressions on all cylinders.
Are the compressions correct?

YES → Check the fitting of the injector concerned and repair if necessary.
Otherwise change the injector concerned.
After replacing the injector, follow the injector code programming procedure (see **Replacement of components**), run **SC036 Reinitialise programming**, and select the number of the injector replaced.

Repeat **Part B of Test 10** to confirm the repairs.

NO → Check the cylinder block.

YES → The injectors are operating correctly.

IMPORTANT:
When removing / refitting injectors, follow the cleanliness and safety instructions (see **MR 395 (Laguna II ph2), 402 (Vel Satis), 405 (Espace IV Ph2), 364 (Megane II ph2), 370 (Scenic II ph2) Mechanical, 13B, Diesel injection, Diesel injectors: Removal - Refitting**).

GETtheMANUALS.org

TEST10 CONTINUED 3	

Part C:

Confirmation of flow correction fault finding for each injector (individual correction):

Clear the faults and run a test with the **engine at idle speed** and the fuel temperature **> 50°C**, check that no faults appear on the **diagnostic tool** and that the correction values do not reach **X = ±** 5 mg/stroke to confirm the repair.
– If one or more cylinders have flow correction values for an injector which exceed **X = ± 5 mg/stroke**, follow the fault finding procedure described in **Part A: Fuel regulation balance check for each injector (individual) of Test 10**.
– Otherwise, follow the fault finding procedure described in **Part D of Test 10**.

Part D:

Injector nozzle sealing check:

Check the level and condition of the engine oil:
– If there is contamination from the diesel fuel, the leaking injector nozzle will be "greasy".
– Disconnect the preheating relay.
– Ensure that this is not caused by rising engine oil by checking the engine compression values.
– Check the condition of the heater plug: this must not be wet. If it is, change the defective injector.
– If the engine compression values are correct: locate the faulty injector by looking at the condition of the cylinders and the pistons through the heater plug wells (greasy cylinder, overheating, signs of damage, etc.).
– If the cylinder - piston examination is not conclusive, remove the injectors and change the one with the greasy nozzle.
– If the fault finding checks do not enable the engine to be repaired, contact the Techline.

After replacing the injector, follow the injector code programming procedure (see **Replacement of components**), run **SC036 Reinitialise programming**, and select the number of the injector replaced.

Note:
Before replacing an injector, check for the sealing washer and its conformity (see **Fault finding chart ALP4 Poor performance**).

IMPORTANT:
When removing / refitting injectors, follow the cleanliness and safety instructions (see **MR 395 (Laguna II ph2), 402 (Vel Satis), 405 (Espace IV Ph2), 364 (Megane II ph2), 370 (Scenic II ph2) Mechanical, 13B, Diesel injection, Diesel injectors: Removal - Refitting**).

GETtheMANUALS.org

TEST11	Temperature upstream of turbine too low

Perform a complete fault finding of the injection computer using the diagnostic tool.
Are there any present or stored faults?
YES → Apply the procedure for dealing with the associated faults.

NO

Run **Test 1 Exhaust system check**
Is the exhaust pipe correct?
NO →

YES

Apply **Test 4 Turbocharged air inlet circuit check**.
Is the inlet circuit in order?
NO →

YES

Run **Test 4 Air flowmeter**
Is the air flow sensor correct?
NO →

YES

Run **Test 10 Poor injector operation**
Are the injectors correct?
NO →

YES

Contact the Techline.

Repair then carry out another particle filter regeneration.
Run command **SC017 "Particle filter regeneration"** (see **Interpretation of commands**).

If the second regeneration is successful, it is **essential** to change the engine oil and replace the oil filter.

If the second regeneration fails, contact the Techline.

GETtheMANUALS.org

TEST12	Diesel fuel conformity check

WARNING
During this operation, it is essential to:
– refrain from smoking or bringing incandescent objects close to the work area,
– guard against petrol splashes caused by the residual pressure in the pipes,
– wear safety goggles with side guards,
– wear leaktight gloves (Nitrile type).

IMPORTANT
– To avoid any corrosion or damage, protect the areas on which fuel is likely to run.
– To prevent impurities from entering the circuit, place protective plugs on all fuel circuit components exposed to the open air.

Preparations:
Weigh an empty **1300 ml plastic cup (part no. 77 11 171 413)** with its cover **(part no. 77 11 171 416)** using electronic scales such as those used in body paint workshops (example: **PANDA part no. 77 11 224 995**). Record the weight of the empty plastic cup.
This type of plastic cup is used to prepare paint.

Remove **1 litre** of fuel from the **diesel fuel filter outlet** (see **MR395 (Laguna II ph2) or MR402 (Vel Satis ph2) or MR405 (Espace IV ph2) or MR364 (Mégane II ph2) or MR370 (Scénic II ph2), Mechanical, 19C, Tank, Fuel tank: Draining**), using a pneumatic transfer pump (**part no. 634-200**) and place it in the **1300 ml** plastic cup. Cover the plastic cup with its cover and let it settle for approximately**2 minutes**.

Is the fuel cloudy or does it separate into two parts?

YES → Presence of water in diesel fuel, the fuel is not compliant. Drain the fuel circuit, including the tank (see **MR395 (Laguna II ph2) or MR402 (Vel Satis ph2) or MR405 (Espace IV ph2) or MR364 (Mégane II ph2) or MR370 (Scénic II ph2), Mechanical, 19C, Tank, Fuel tank: Draining**).

NO → A

EDC16CP33_V18_TEST12 / EDC16CP33_V1C_TEST12 / EDC16CP33_V54_TEST12 / EDC16CP33_V20_TEST12 / EDC16CP33_V58_TEST12 / EDC16CP33_V5C_TEST12 / EDC16CP33_V24_TEST12 / EDC16CP33_V04_TEST12 / EDC16CP33_V08_TEST12 / EDC16CP33_V44_TEST12 / EDC16CP33_V4C_TEST12 / EDC16CP33_V34_TEST12 / EDC16CP33_V38_TEST12 / EDC16CP33_V74_TEST12 / EDC16CP33_V28_TEST12 / EDC16CP33_V62_TEST12/ EDC16CP33_V26_TEST12 / EDC16CP33_V60_TEST12

GETtheMANUALS.org

TEST12 CONTINUED 1	

A

NO

Weigh the diesel fuel and note the fuel weight after subtracting the weight of the empty plastic cup and its cover.
Does the fuel weight fall between the minimum and maximum weights given in the table below?

Calculated weight (g.)		Fuel temperature (°C)
Min. weight	Max. weight	
821	846	13
821	846	14
820	845	15
819	844	16
819	844	17
818	843	18
817	842	19
816	841	20
816	841	21
815	840	22
814	839	23
814	839	24
813	838	25

Check the fuel temperature by immersing a thermometer in the plastic cup.

YES

End of test.

NO

The fuel is not correct.
If the fuel weight is less than the minimum value then there is petrol in the diesel fuel.
If the fuel weight is greater than the minimum value then there is oil in the diesel fuel.
Drain the fuel circuit, including the tank (see **MR395 (Laguna II ph2) or MR402 (Vel Satis ph2) or MR405 (Espace IV ph2) or MR364 (Mégane II ph2) or MR370 (Scénic II ph2), Mechanical, 19C, Tank, Fuel tank: Draining**).

GETtheMANUALS.org

TEST12 CONTINUED 2	

Note:
If the weight measured reaches the limit values, the measurement can be performed with a **2230 ml plastic cup (part no. 77 11 171 414)** and its cover **(part no. 77 11 171 417):**
– Carry out a quick test drive in order to mix the fuel, then remove **2 l** of fuel.
– Perform the test again and check the results by multiplying the limit values by 2.

Contact the Techline if you have doubts or problems with the customer.

GETtheMANUALS.org

VEL SATIS

1 Engine and peripherals

13B DIESEL INJECTION

EDC16C36
Program No.: 91
Vdiag No.: 04, 08

Fault finding – Introduction	13B - 2
Fault finding – Cleanliness guidelines	13B - 7
Fault finding – System operation	13B - 9
Fault finding – Replacement of components	13B - 19
Fault finding – Configurations and programming	13B - 25
Fault finding – Fault summary table	13B - 26
Fault finding – Interpretation of faults	13B - 31
Fault finding – Conformity check	13B - 202
Fault finding – Status summary table	13B - 203
Fault finding – Interpretation of statuses	13B - 205
Fault finding – State interpretation	13B - 247
Fault finding – Parameter summary table	13B - 258
Fault finding – Interpretation of parameters	13B - 263
Fault finding – Command summary table	13B - 340
Fault finding – Interpretation of commands	13B - 341
Fault finding – Customer complaints	13B - 367
Fault finding – Fault Finding Chart	13B - 368
Fault finding – Tests	13B - 385
Fault finding – Glossary	13B - 411

"The repair procedures given by the manufacturer in this document are based on the technical specifications current when it was prepared.

The procedures may be modified as a result of changes introduced by the manufacturer in the production of the various component units and accessories from which his vehicles are constructed."

All rights reserved by Renault s.a.s.

Copying or translating, in part or in full, of this document or use of the service part reference numbering system is forbidden without the prior written authority of Renault s.a.s.

© Renault s.a.s. 2011

GETtheMANUALS.org

1. SCOPE OF THIS DOCUMENT

This document presents the fault finding procedure applicable to all computers with the following specifications:

Vehicle(s): **Laguna II phase 2, Espace IV phase 2, Velsatis phase 2**	*Name of computer:* **Bosch H EDC16C36**
Engines: **G9T 605, 607, 645**	*Program No.:* **91**
Function concerned: **Diesel injection**	Vdiag No.: ***04, 08***

2. PREREQUISITES FOR FAULT FINDING

Documentation type

Fault finding procedures (this manual):
– Assisted fault finding (integrated into the **diagnostic tool**), Dialogys.

Wiring Diagrams:
– Visu Schéma (CD-ROM), paper.

Type of diagnostic tools

– CLIP

Special tooling required

Special tooling required	
Multimeter	
Elé. 1681	**Universal bornier**

3. REMINDERS

Procedure

To save energy, **the vehicle's UCH interrupts the + after ignition feed after 3 minutes**.

To run fault finding on a computer, it is possible to force the + after ignition feed for **1 hour** by applying the following procedure:
– press the unlocking button on the card,
– insert the card in the reader,
– press the Start button (interrupting the timed + after ignition feed mode),
– press the start button for more than **5 seconds**, **without conditions for starting being met**, until the immobiliser warning light flashes rapidly (**4 Hz**).

This "forced + after ignition feed" mode remains on for **1 hour**.
Pressing the Start button or removing the card from the reader cuts off the forced + after ignition feed but does not cut off the timed forced + after ignition feed mode. As long as one hour has not elapsed the + after ignition feed function restarts the forced + after ignition feed for the remaining time.

GETtheMANUALS.org

Faults

Faults are declared present or stored (depending on whether they appeared in a certain context and have disappeared since, or whether they remain present but are not diagnosed within the current context).

The **present** or **stored** status of faults should be taken into consideration when the **diagnostic tool** is used after the + after ignition feed (without activating the system components).

For a **present fault**, apply the procedure described in the **Interpretation of faults** section.
For a **stored fault**, note the faults displayed and apply the instructions in the **Notes** section.
If the fault is **confirmed** when the instructions in the Notes section are applied, the fault is present. Deal with the fault.
If the fault is **not confirmed**, check:
– the electrical lines which correspond to the fault,
– the connectors on these lines (corrosion, bent pins, etc.),
– the resistance of the faulty component,
– the condition of the wires (melted or cut insulation, wear).

Conformity check

The aim of the conformity check is to check data which does not produce a fault on the **diagnostic tool** when the data is inconsistent. Therefore, this stage is used to:
– carry out fault finding on faults that do not have a fault display, and which may correspond to a customer complaint,
– check that the system is operating correctly and that there is no risk of a fault recurring after repair.

This section gives the fault finding procedures for statuses and parameters and the conditions for checking them.

If a status is not behaving normally or a parameter is outside permitted tolerance values, you should consult the corresponding fault finding page.

Customer complaints - Fault finding chart

If the test with the **diagnostic tool** is OK but the customer complaint is still present, the fault should be dealt with by **customer complaints**.

A summary of the overall procedure to follow is provided on the following page in the form of a flow chart.

GETtheMANUALS.org

4. FAULT FINDING PROCEDURE

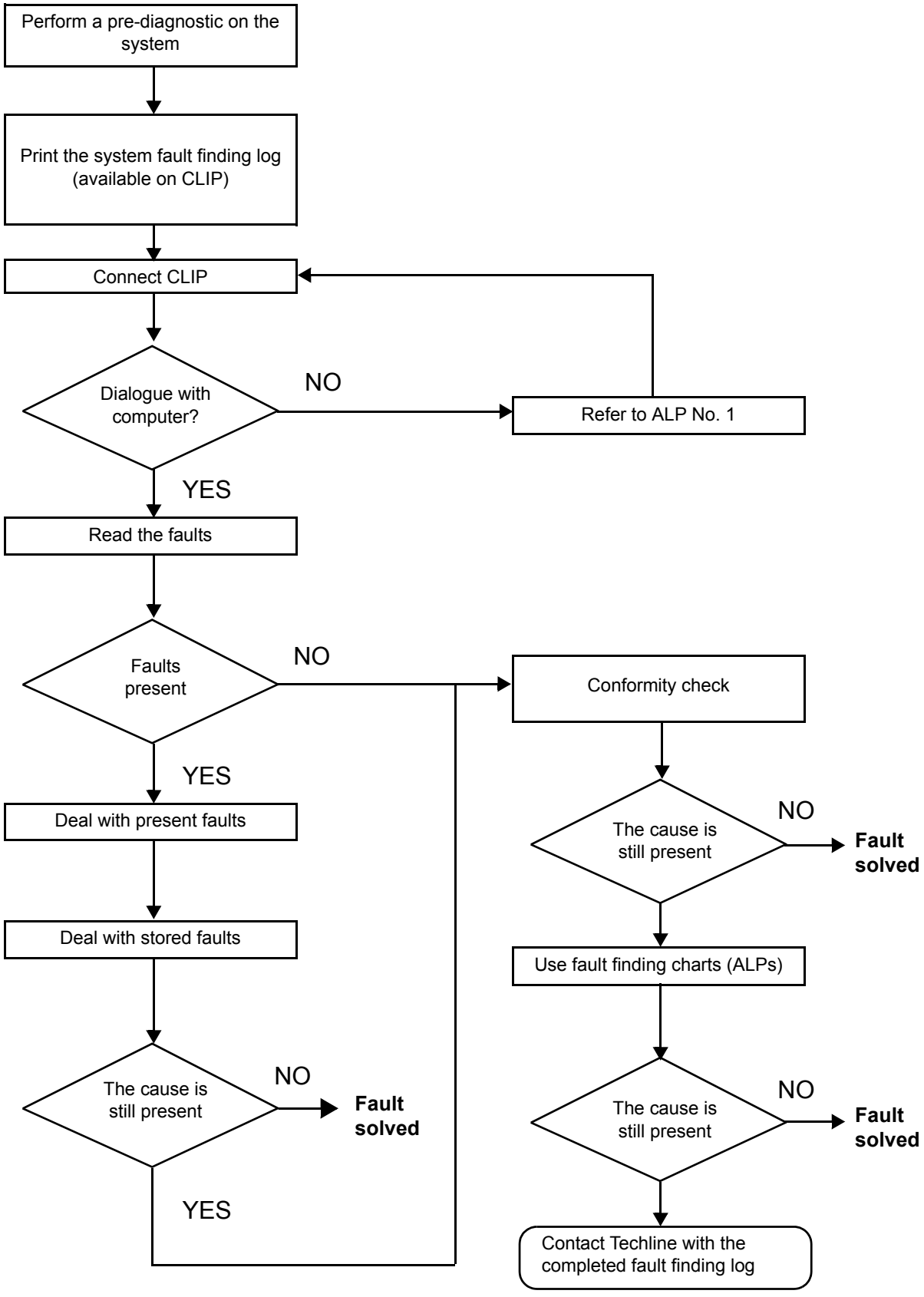

GETtheMANUALS.org

4. FAULT FINDING PROCEDURE (continued)

Wiring check

Fault finding problems
Disconnecting the connectors and/or manipulating the wiring may temporarily clear the cause of a fault.
Electrical measurements of voltage, resistance and insulation are generally correct, especially if the fault is not present when the analysis is made (stored fault).

Visual inspection
Look for damage under the bonnet and in the passenger compartment.
Carefully check the fuses, insulators and wiring harness routing.
Look for signs of oxidation.

Physical inspection
While manipulating the wiring harness, use the diagnostic tool to note any change in fault status from stored to present.
Make sure that the connectors are firmly secured.
Apply light pressure to the connectors.
Twist the wiring harness.
If there is a change in status, try to locate the source of the fault.

Inspection of each component
Disconnect the connectors and check the appearance of the clips and tabs, as well as the crimping (no crimping on the insulating section).
Make sure that the clips and tabs are properly locked in the sockets.
Check that the clips or tabs have not been bent back during connection.
Check the clip contact pressure using an appropriate model of tab.

Resistance check
Check the continuity of entire lines, then section by section.
Look for a short circuit to earth, to **+ 12 V** or with another wire.

If a fault is detected, repair or replace the wiring harness.

GETtheMANUALS.org

5. FAULT FINDING LOG

IMPORTANT

IMPORTANT
All faults involving a complex system call for thorough diagnostics with the appropriate tools. The FAULT FINDING LOG, which should be completed during the fault finding procedure, ensures a record is kept of the procedure carried out. It is an essential document when consulting the manufacturer.

IT IS THEREFORE ESSENTIAL THAT THE FAULT FINDING LOG IS FILLED OUT EVERY TIME IT IS REQUESTED BY TECHLINE OR THE WARRANT RETURNS DEPARTMENT.

You will always be asked for this log:
– when requesting technical assistance from the Techline,
– when requesting approval before replacing parts for which approval is compulsory,
– to be attached to "monitored" parts to be returned. The log is needed for warranty reimbursement, and enables better analysis of the parts removed.

6. SAFETY INSTRUCTIONS

Safety rules must be observed during any work on a component to prevent any damage or injury:
– check the battery voltage to avoid incorrect operation of computer functions,
– use the proper tools.

GETtheMANUALS.org

1. HAZARDS ASSOCIATED WITH CONTAMINATION

The high pressure direct injection system is highly sensitive to contamination. The risks caused by the introduction of contamination are:
– damage to or destruction of the high pressure injection system,
– a component seizing up,
– a component losing its sealing.

All After-Sales operations must be performed under very clean conditions. This means that no impurities (particles a few microns in size) should have penetrated the system during dismantling.

The cleanliness guidelines must be applied from the filter through to the injectors.

What are the sources of contamination?

– metal or plastic swarf,
– paint,
– fibres:
    – from cardboard,
    – from brushes,
    – from paper,
    – from clothing,
    – from cloths,
– foreign bodies such as hair,
– the ambient atmosphere,
– etc.

Important
Cleaning the engine using a high pressure washer is prohibited because of the risk of damaging connections. In addition, moisture may collect in the connectors and create faults in the electrical connections.

2. INSTRUCTIONS TO BE FOLLOWED PRIOR TO ALL OPERATIONS

Important
Before carrying out any work on the high pressure injection system, protect:
– the accessories and timing belts,
– the electrical accessories, (starter, alternator, electric power-assisted steering pump),
– the flywheel surface, to prevent any diesel from running onto the clutch friction plate.

Check that you have plugs for the unions to be opened (set of plugs available from the Parts Department). The plugs are single-use only. After use, they must be discarded (once used they are soiled and cleaning is not sufficient to make them reusable). Unused plugs must be discarded.

GETtheMANUALS.org

Check that you have hermetically resealable plastic bags for storing removed parts. Parts stored in this way will be less susceptible to the risk of contamination. The bags are to be used once only, and discarded after use.

Use lint-free cleaning cloths (cloth part reference **77 11 211 707**). Using normal cloth or paper is prohibited. They are not lint-free and could contaminate the fuel circuit. A lint-free cloth should only be used once.

Use fresh cleaning agent for each operation (used cleaning agent is contaminated). Pour it into a clean receptacle.

For each operation, use a clean brush in good condition (the brush must not shed its bristles).

Use a brush and cleaning agent to clean the unions to be opened.

Blow compressed air over the cleaned parts (tools, workbench, the parts, unions and injection system zones). Check that no bristles are left.

Wash your hands before and during the operation if necessary.

When wearing leather protective gloves cover them with latex gloves to prevent contamination.

3. INSTRUCTIONS TO BE FOLLOWED DURING THE OPERATION

As soon as the circuit is open, all openings must be plugged to prevent impurities from entering the system. The plugs to be used are available from the Parts Department. The plugs must not be reused under any circumstances.

Seal the pouch shut, even if it has to be opened shortly afterwards. The ambient atmosphere carries contamination.

All components removed from the injection system must be stored in a hermetically-sealed plastic bag once the plugs have been inserted.

Using a brush, cleaning agent, air gun, brush or normal cloth is strictly prohibited once the circuit has been opened. These items could allow contamination to enter the system.

A new component replacing an old one must not be removed from its packaging until it is to be fitted to the vehicle.

GETtheMANUALS.org

System outline

The high pressure injection system is designed to deliver a precise quantity of diesel fuel to the engine at a set moment.

It is fitted with a **BOSCH 128-track** computer, **type** EDC16C36.

The system comprises:
– a priming bulb on the low pressure circuit,
– a diesel filter fitted with a water in diesel fuel sensor,
– a high pressure pump with a built-in low pressure pump (transfer pump),
– a high pressure regulator mounted on the pump,
– an injector rail,
– a diesel fuel pressure sensor built into the rail,
– four solenoid injectors,
– a diesel temperature sensor,
– a coolant temperature sensor,
– a cylinder reference sensor,
– an engine speed sensor,
– a turbocharger pressure sensor,
– an accelerator pedal potentiometer,
– an exhaust gas recirculation valve,
– a recirculated gas cooling solenoid valve (**G9T 605, 607, 645**),
– an atmospheric pressure sensor integrated into the injection computer,
– an air flowmeter fitted with an air temperature sensor,
– a turbocharging pressure limitation solenoid valve,
– a motorised damper valve,
– a particle filter,
– a particle filter differential pressure sensor,
– a particle filter upstream temperature sensor,
– a particle filter downstream of the temperature sensor,
– a temperature sensor upstream of the turbine,
– a richness ratio sensor (**G9T 605, 607, 645**).

The **common rail** direct high pressure injection system works sequentially (based on the petrol engine multipoint injection).

This injection system reduces operating noise, reduces the volume of pollutant gases and particles and produces high engine torque at low engine speeds thanks to a pre-injection procedure.

The high pressure pump generates the high pressure and transmits it to the injector rail. The actuator located on the pump controls the quantity of diesel supplied, according to the demand determined by the computer. The rail supplies each injector through a steel pipe.

GETtheMANUALS.org

a. The computer:

Determines the value of injection pressure necessary for the engine to operate correctly and then controls the pressure regulator.
Checks that the pressure value is correct by analysing the value transmitted by the pressure sensor located on the rail.
It determines the injection timing required to deliver the right quantity of diesel fuel and the moment when injection should start. Controls each injector electrically and individually after determining these two values.

The flow injected into the engine is determined by:
– the duration of injector control,
– the rail pressure (regulated by the computer),
– the injector opening and closing speed,
– the needle stroke (determined by a constant for the type of injector),
– the nominal hydraulic flow of the injector (specific to each injector).

The computer manages:
– idling regulation,
– exhaust gas flow reinjection to the inlet (EGR),
– fuel supply check (advance, flow and rail pressure),
– the fan assembly control unit for engines **G9T605/607/645**
– the air conditioning (cold loop function),
– cruise control/speed limiter function,
– pre-post heating control,
– indicator lights control via the multiplex network,
– the operation of the catalysed particle filter.

The high pressure pump is supplied at low pressure by an integrated low pressure pump (transfer pump).

It supplies the rail, the pressure of which is controlled by the fuel flow actuator (MPROP) for charging, and for discharging by the injector valves. This compensates for pressure drops.

The flow actuator allows the high-pressure pump to supply the exact quantity of diesel fuel required to maintain the pressure in the rail. This component minimises the heat generated and improves engine output.
In order to discharge the rail using the injector valves, the valves are controlled by brief electrical pulses which are:
– short enough not to open the injector (passing through the feedback circuit from the injectors),
– long enough to open the valves and discharge the rail.

Some vehicles have a presence sensor mounted in the filter for detecting water in the diesel. If there is water in the diesel fuel, the orange "Injection and pre-post heating" warning light will come on.

WARNING
The engine must not operate with:
– Diesel fuel containing more than **10%** diester,
– petrol even in minute quantities

The system can inject diesel fuel into the engine at a pressure of up to **1600 bar**. Before each operation, check that the injector rail is depressurised and that the fuel temperature is not too high.

When working on the high pressure injection system, you must follow the cleanliness guidelines and safety advice specified in this document.

GETtheMANUALS.org

Removal of the internal parts of the pump and injectors is prohibited. Only the fuel flow regulator/actuator, diesel fuel temperature sensor and the venturi can be replaced.

For safety reasons, it is strictly prohibited to undo a high pressure pipe union when the engine is running.

It is not possible to remove the pressure sensor from the fuel rail because this may cause circuit contamination faults. In the event of pressure sensor failure, replace the pressure sensor, rail and high pressure pipes associated with the rail.

Supplying **+ 12 V** directly to any component in the system is prohibited.

Ultrasonic decoking and cleaning are prohibited.

Never start the engine unless the battery is connected correctly.

Disconnect the injection computer when carrying out any welding work on the vehicle.

b. The connections between the vehicle's various computers are multiplexed.

The electronic system fitted in this vehicle is multiplexed.
It enables dialogue between the various vehicle computers. As a result:
– the fault warning lights on the instrument panel are lit by the multiplex network,
– vehicle faults are displayed by the multiplex network,
– the vehicle speed sensor on the gearbox is not needed.

The vehicle speed signal on the instrument panel is sent by the ABS computer via the multiplex network. The vehicle speed signal is mainly used by the injection computer, the airbag computer and the automatic transmission computer (if the vehicle is fitted with this).

GETtheMANUALS.org

c. Functions hosted:

Air conditioning management assistance:
For vehicles with air conditioning, the **EDC16C36** system can deactivate the air conditioning via the UCH in certain conditions of use:
– when requested by the driver,
– when starting the engine,
– if the engine overheats (in order to reduce the power the engine has to supply),
– when the engine speed is kept at a very high level (to protect the compressor),
– during transition phases (e.g. under heavy acceleration when overtaking, anti-stalling and moving off strategies). These conditions are only taken into account when they do not occur repeatedly, in order to prevent system instabilities (erratic deactivations), when certain faults appear.

Management of the damper valve:
The damper valve currently has three functions:
– the valve closes in order to block the passage of air towards the cylinders to shut off the engine. The aim of this is to stop the engine as quickly as possible and to reduce instabilities as the engine is switched off.
– "valving" function depending on the engine operation: the damper valve closes by a few % to create a "venturi" effect at the EGR valve passage section.
– The purpose of this valving is to accelerate the air flow of EGR gas and decrease pollutant emissions, a control function during regeneration of the particle filter.

Thermoplunger management:
This vehicle is fitted with thermoplungers. They are managed and activated by the injection system.
There are two types of program:
– controlled by the injection system during particle filter regeneration,
– passenger compartment function; the air conditioning requests the injection to activate one or more thermoplungers to raise the air temperature in the passenger compartment. The injection computer authorises the actuation or non-actuation of the thermoplungers according to the operating phases and the power requirements of the engine. The maximum number of heating elements that can be managed is four; their activation depends mainly on the coolant temperature (< **15°C**) and air temperature (< **5°C**).

GETtheMANUALS.org

Cruise control/speed limiter management:

The vehicle cruise control function, when activated, allows you to keep the vehicle speed at a selected value regardless of the driving conditions encountered.
Using the control buttons, the driver can increase or reduce the speed of the vehicle.

If the driver wishes to exceed the cruising speed, he may:
– press the accelerator pedal and exceed the cruising speed (the vehicle will return to the initial cruising speed once the driver takes his foot off the pedal),
– press the system control buttons.

The cruise control function can be deselected either by:
– the system control buttons,
– deactivating the cruise control switch,
– when system events are detected, such as the brake pedal or clutch being pressed,
– when system errors are detected such as an inconsistent vehicle speed.

The cruise control function can also be temporarily disabled when the driver wants to increase speed by pressing the accelerator pedal. The cruising speed is resumed when the driver releases the accelerator pedal.
The vehicle will then attempt to reach the cruising speed at a controlled acceleration rate.

It is possible to reactivate the vehicle speed control and resume the last cruising speed after deactivation (computer supply not cut off).

When activated (using the selection switch) the vehicle speed limiter function limits the vehicle speed to a preselected value. The driver controls the vehicle in the normal way using the accelerator pedal until the limit speed is reached.

If an attempt is made to exceed this speed, the system ignores the pedal request and controls the vehicle speed in the same way as the cruise control function, provided that the driver keeps the accelerator pedal depressed.
As with the cruise control function, the cruising speed can be altered using the control buttons by pressing briefly or keeping the switch pressed.

For safety reasons, it is possible to exceed the limit speed by depressing the accelerator pedal and exceeding the pedal position limit value. The vehicle speed is then totally controlled as a function of pedal position until the speed falls back below the cruising speed when the speed limiter function will once again be reactivated.

If the driver wishes to exceed the cruising speed, he may:
– exceed the accelerator pedal's kickdown point,
– increase the limit speed by pressing or pressing and holding the limit speed switch.

The speed limiter function can be deselected either:
– the system control buttons,
– by switching off the speed limiter switch,
– when system events are detected, such as the brake pedal or clutch being pressed,
– when system errors are detected such as an inconsistent vehicle speed.

GETtheMANUALS.org

Exhaust gas recirculation management:

The EGR (Exhaust Gas Recirculation) system involves removing exhaust gases and reintroducing them into the inlet.
The exhaust gases are collected in the exhaust manifold (before the turbocharger), then directed to the EGR cooler and the EGR valve.

EGR cooler
The EGR cooler bypass function cools, using a gas-water exchanger, the gases collected from the exhaust and then reintroduces them into the inlet. This cooler is equipped with an all-or-nothing solenoid valve, which enables gases to be cooled or not cooled, depending on the emission control requirements.

EGR valve
The system comprises a direct current EGR valve and a potentiometer which reports the position of the valve.
A positive command controls its opening (**0**→**100%**).
The potentiometer serves to control and run fault finding on the valve.
The very first time the engine is started, then each subsequent engine start, the "valve closed" position is programmed (offset). This value is compared to the very first offset or last programmed offset, for the purposes of fault finding. It is also used to readjust the valve control function. This is why it is important to associate the EGR valve to the computer which controls it.

Mixture ratio sensor management:

The richness ratio sensor is mounted in the turbo outlet.
Its function is to reset the injection system drift.

The injection computer does not control the sensor immediately when the engine has just been started:
– **ET300 Richness regulation** is **INACTIVE**,
– **PR779 Richness ratio sensor** is **1**.

After a length of time that depends on the coolant temperature, with the engine running and in the absence of no load conditions, the injection computer authorises the heating of the sensor:
– **ET300 Richness regulation** becomes **ACTIVE**,
– in approximately ten seconds, **PR778 Richness ratio sensor temperature** increases up to approximately **780°C**,
– then **PR779 Richness ratio sensor** displays a value of **0.3 ± 0.1** at idle speed.

GETtheMANUALS.org

Catalysed particle filter management:

The particle filter prevents the escape of carbon particles emitted by the engine but not yet removed from the exhaust gases.

The particle filter is a microporous structure containing channels arranged so as to force-filter the exhaust gases.

The exhaust pipe consists of several components:
– an oxidation catalytic converter mounted after the turbocharger. This catalytic converter ensures that HC/CO levels meet current standards by generating the heat (rise in exhaust temperature caused by catalysis) required for particle filter regeneration.
– a catalysed particle filter located under the bodywork;
– differential pressure sensor to inform the computer about the difference in pressure upstream and downstream of the particle filter and a temperature sensor upstream and downstream of the particle filter,
– a temperature sensor upstream of the turbine (TAVT).

During driving, the particle filter becomes loaded with particles of soot. When a given weight of soot determined by computer mapping is reached, regeneration mode can be triggered if the maximum weight of soot in the particle filter has not been reached and the engine operating conditions are met (coolant temperature,etc.)

Particle filter regeneration consists of burning the particles of soot that have accumulated in the filter.

The differential pressure sensor measures the particle filter inlet/outlet pressure differential; this measurement is used to estimate the weight of soot present in the particle filter by mapping in the computer:
(soot weight = pressure differential as a function of exhaust volume flow rate).

If all the criteria are met, the computer enters regeneration mode. The injection programming is adjusted in order to raise the target exhaust gas temperature between **550 and 650°C**.
This temperature allows the particles accumulated in the filter to be partially or completely burnt (regenerated).
Regeneration efficiency depends on the particle filter inlet temperature and the time spent in regeneration mode.

Regeneration can be carried out automatically when driving if the weight of soot is less than **70 g** and if the number of regeneration attempts when driving is less than **11**.

If the weight of soot is greater than **70 g**, the user will need to request after-sales regeneration.

This regeneration is carried out in the workshop. Be sure to follow the instructions described in the interpretation of commands (**SC017 Particle filter regeneration**) to ensure a completely safe regeneration procedure.

IMPORTANT
The particle filter must be replaced after a period of time which largely depends on the grade of engine oil used - this information is in the driver's handbook.
After replacing it, be sure to reconfigure certain parameters on the computer using command **SC036 Reinitialise programming**.

GETtheMANUALS.org

Warning light management:

Instrument panel display
The computer displays certain information on the instrument panel relating to engine operation. This involves six functions:
– the pre-postheating warning light,
– the coolant temperature warning message,
– the **level 1** fault warning light (non-critical fault),
– the **level 2** fault warning light (emergency stop),
– the **OBD** warning light (European On Board Diagnostic),
– the special particle filter warning light.

These six functions are represented by 5 warning lights and/or messages displayed by the on-board computer.
In addition, certain warning lights are, when lit, accompanied by a spoken message on vehicles fitted with a voice synthesiser (refer to the driver's handbook).

A **3 second** visual inspection (automatic test procedure managed by the instrument panel) is carried out by the injection computer when the ignition is switched on.

Orange pre-postheating warning light
This warning light is used as an in-operation indicator lamp:

– Continuously lit under + after ignition feed: indicates preheating of the heater plugs.
It goes out when preheating is complete and the engine is able to start.

Orange SERVICE non-critical fault warning light (level 1)
This warning light is used to indicate a fault in the system:
– Continuously lit with the message **"CHECK INJECTION"**:

Indicates a **level 1** fault (involving operation of the injection system in defect mode).
The driver should have the repairs carried out as soon as possible.

Temperature/red emergency STOP (level 2) warning light
This indicator light is used both as an in-operation indicator light and as a system fault warning light.
– Intermittently lit, accompanied by the message**"ENGINE OVERHEATING"**:
Indicates that the coolant temperature is too high (the driver is free to stop the vehicle or not).
– Continuously lit, accompanied by the message **INJECTION FAULT: STOP THE ENGINE** and by a bleep, indicates a **level 2** fault.
In that case, the vehicle must be stopped immediately (when traffic conditions allow).
The driver should carry out repairs as soon as possible.

European On Board Diagnostic excess pollution ORANGE warning light

An engine symbol accompanied by the message **"CHECK ANTIPOLLUTION"**.
This warning light comes on if the system has one or more OBD faults.
This warning light is used to alert the driver to injection faults that could lead to excessive pollution, or if the **EOBD system (European On Board Diagnostic)** has been deactivated.
The injection computer requests illumination of the OBD warning light for a present fault only after three consecutive driving cycles.
The driver should have the repairs carried out as soon as possible.

GETtheMANUALS.org

Special ORANGE particle filter warning light
This warning light is used to warn the driver that the particle filter is loaded with particles (weight of soot greater than **45 g** or more than **8** regeneration failures whilst driving due to driving conditions not being favourable for regeneration). The driver must drive as soon as possible at an average speed of **48 mph (80 km/h)** subject to the road conditions and authorised speed limits.

European On Board Diagnostic management:
The **OBD (On Board Diagnostic)** system permits detection of any faults relating to the vehicle emission control system (OBD EURO IV emission control standards being exceeded).

This system should be active for the entire life of the vehicle.

1. Conditions of an OBD fault appearing

An OBD fault will be detected after **3 driving cycles**.
It allows the driver to know whether the vehicle has a fault directly linked to the emission control system.

2. System faults displayed by the OBD

Only a few faults are displayed by the OBD system:
- **DF002 Air temperature sensor circuit.**
- **DF004 Turbocharging pressure sensor circuit.**
- **DF011 Sensor feed voltage no. 1.**
- **DF012 Sensor feed voltage no. 2.**
- **DF013 Sensor feed voltage no. 3.**
- **DF026 Cylinder 1 injector control circuit.**
- **DF027 Cylinder 2 injector control circuit.**
- **DF028 Cylinder 3 injector control circuit.**
- **DF029 Cylinder 4 injector control circuit**
- **DF054 Turbocharging solenoid valve control circuit.**
- **DF055 Turbocharging pressure regulation circuit.**
- **DF056 Air flow sensor circuit.**
- **DF107 Computer memory.**
- **DF200 Atmospheric pressure sensor.**
- **DF209 EGR position sensor circuit.**
- **DF272 EGR valve control circuit.**
- **DF315 Particle filter diff.* pressure sensor.**
- **DF504 Automatic transmission.**
- **DF647 EGR valve position regulation**

Some repair operations require programming to ensure that certain engine components function correctly. Follow the programming procedures (see Replacement of components), if replacing the exhaust gas recirculation valve or an injector.

* diff: differential

GETtheMANUALS.org

3. Conditions for deleting an OBD fault

An OBD fault is deleted in several phases.
The **present** fault on **the diagnostic tool** will only be **stored** (after a repair operation) after the vehicle has been driven 3 times.
The OBD warning light will only go out after these 3 trips.
The instrument panel warning light coming on does not automatically mean that the system has a fault.

In order for the OBD fault and display parameters to be cleared from the computer, the system requires 40 engine heating cycles.

An engine heating cycle is a driving cycle during which:
– the engine coolant temperature reaches at least 71.1°C,
– the engine coolant temperature varies by 22.2°C in relation to the engine starting temperature.

If one of these conditions is not fulfilled, the OBD fault will still be present or stored on the injection computer.

GETtheMANUALS.org

COMPUTER REPLACEMENT OR REPROGRAMMING

IMPORTANT
– Switch on the diagnostic tool (mains or cigarette lighter supply).
– Connect a battery charger.
– Cut off all the electrical consumers (lights, interior lighting, air conditioning, radio CD, etc.).
– Wait for the engine to cool (engine coolant temperature < 60° and air temperature < 50°).
– During (re)programming, the instrument panel screen displays **OIL PRESSURE FAULT**.
Ignore this message and do not take any action in connection with it.

Two operations must be performed when replacing or reprogramming the computer:
SC003 Save computer data and SC001 Write saved data.
– Run **SC003** before replacing or reprogramming the computer. This enables certain data to be saved in the diagnostic tool so that the new computer* can be reconfigured like the old one. The saved data includes: injector codes, EGR programming, specific data for particle filter operation and vehicle options.
– Run **SC001** after replacing or reprogramming the computer. It enables you to rewrite the data (saved by command **SC003**), to the new computer*.

If it is not possible to set up communications with the computer to be replaced: no information can be saved.
After replacing the computer:
– Manually enter the IMA code for each injector by reading the code on each injector (see **replacement of injectors**).
– Enter the data specific to particle filter operation by running **SC036 Reinitialise programming** and select "after replacing injection computer with no save option".

Exhaust gas recirculation valve data is programmed automatically the 1st time the new computer is turned on*.

* *new computer or reprogrammed computer.*

GETtheMANUALS.org

➡ **PROCEDURE:**
Before replacing or reprogramming the computer:
– Select **SC003 Backup computer data**,
– if the following message appears: **there is a saved file, do you want to overwrite this data?**: *(this file corresponds to the last save carried out on the tool)*
– select "YES".
– Once the data has been saved, follow the cruise control/speed limiter procedure:
Before reprogramming the injection computer, move the main **Cruise control/Speed limiter switch to the rest position**. The information about the cruise control or the speed limiter displayed on the instrument panel disappears.
Otherwise, if the main switch remains in the cruise control or speed limiter position during and after reprogramming, the Cruise control/Speed limiter function will not be operational.

The procedure for resetting the function is as follows:
Vehicle ignition on.
– Position the main switch in rest position (the computer then detects the rest position).
– Move the switch to the cruise control position to activate the Cruise control function.
– Move the switch to the Limiter position to activate the Speed limiter function.

– Replace the computer or carry out reprogramming then go onto the next step.
After replacing or reprogramming the computer:
– Select **SC001 Write saved data**, then follow the instructions given by the **diagnostic tool**,
– if the VIN is not entered (see **Computer identification** on the main screen),
– Select **VP010 Write VIN**,
– When both these commands have finished,
– switch off the ignition, wait for the **diagnostic tool** message (maximum time **8 minutes**): **"Communication lost with computer: EDC16C36, check the tool connection and computer power supply"**. Before switching the ignition back on,
– then check the system faults, and clear any stored faults,
– if there are no stored faults, deal with present faults,
– clear the faults from the computer memory.

Carry out a road test followed by a complete check with the diagnostic tool.

IMPORTANT
– The injection computer retains the same immobiliser code for life.
– The system has no security code.
– It is forbidden to perform tests with computers borrowed from the Parts Department or from another vehicle which must then be returned.
– These computers are hard-coded.
– If the injection computer appears to be faulty, contact the Techline and refer to the fault finding log.

End of the procedure.

GETtheMANUALS.org

REPLACING THE INJECTORS

Note:
The IMA coding (individual injector correction) is a calibration carried out in production on **each injector** to **adjust the flow** accurately.
These correction values are etched onto the Bakelite body of each injector (7 alphanumeric characters) and then entered into the computer which then controls each injector taking into account its individual **manufacturing variation**.

After one or more injectors have been changed, enter the IMA codes again and then run command SC036 Reset programming.
The system must be configured via the diagnostic socket using the RENAULT CLIP diagnostic tool.

➡ **PROCEDURE to be followed after one or more injectors have been replaced:**

IMPORTANT
Cylinder no. 1 is located at the **engine flywheel end**.

– Make a note of the **IMA** code(s) engraved on the injector body,
– enter these codes in the computer using command **SC002 Enter injector codes**, then follow the instructions given by the **diagnostic tool**,
– once the command has finished,
– switch off the ignition,
– wait for the **diagnostic tool** message (maximum time **8 minutes**): **"Communication lost with computer: EDC16C36, check the tool connection and computer power supply"**. Before switching the ignition back on.
– Return to fault finding mode.
– Select the **Identify computer function** from the main screen.
– Check that the injector codes entered into the computer match those found on the bodies of the injectors:
– If the codes do not match, restart the command **SC002 Enter injector codes procedure**.
– If the codes match, run command **SC036 Reinitialise programming**,
– select **Injectors** as the type of operation, then follow the instructions given by the diagnostic tool.
– Then check the system faults, and clear any stored faults,
– if there are no stored faults, deal with present faults,
– clear the faults from the computer memory.

Carry out a road test followed by a complete check with the diagnostic tool.

IMPORTANT
Engines can only operate correctly if the correct IMA codes have been entered.
If no code has been entered, or if an implausible code has been entered, fault DF276 Injector Code Programming will be present, and the engine will be in defect mode (engine speed is reduced significantly).
If another injector's code has been entered, the system will accept it but will make the wrong correction. This could lead to engine damage, loss of performance and excessive pollution.
Always use the correct injector codes for the engine cylinder/computer.

End of the procedure.

GETtheMANUALS.org

REPLACING THE EXHAUST GAS RECIRCULATION (EGR) VALVE

After the exhaust gas recirculation valve has been replaced, the computer must store the new valve's offset and the offset measured the last time the ignition was switched off, which is when the valve closed.
Using this data, the computer can detect whether the valve is clogged or seized.

When the valve is replaced, clear the stored offsets so that the program uses the new valve's offset value.

The data linked to this strategy is compiled in the **Emission control/OBD** sub-function.
– **PR128: FIRST EGR VALVE OFFSET**.
– **PR129: LAST EGR VALVE OFFSET > or = PR128 if the valve is new**.

Programming **PR128 and PR129** must be cleared every time the exhaust gas recirculation valve is replaced.

➡ **PROCEDURE to be followed after replacing the exhaust gas recirculation valve:**

– Run command **SC036 Reinitialise programming**,
– select **EGR valve** as the type of operation, then follow the instructions given by the **diagnostic tool**.

Note:
When the reinitialisation is complete, the **Emission control/OBD** sub-function displays:
PR128 = PR129 > 100 %

– When the command is finished,
– **switch off the ignition**,
– wait for the **diagnostic tool** message (maximum time **8 minutes**): **"Communication lost with computer: EDC16C36, check the tool connection and the computer power supply"**, before switching the ignition back on.

When the ignition is switched on again the new EGR valve offset is automatically reset.

Note:
When the new EGR valve offset is reprogrammed, the **Antipollution/OBD** sub-function will display:
10 % < PR128 < 40 %
PR129 > 100 %

– Start the vehicle to enable the latest EGR valve offset to be programmed.
– Switch off the ignition,
– wait for the **diagnostic tool** message (maximum time **8 minutes**): **"Communication lost with computer: EDC16C36, check the tool connection and computer power supply"**, before switching the ignition back on.

GETtheMANUALS.org

The last EGR valve offset reprogrammed is stored on the computer.

Note:
When the reprogramming of the last EGR valve offset has been completed, the Emission control/OBD sub-function displays:
10 % < PR128 < 40 %
10 % < PR129 < 40 %
and - 1 % ≤ PR129 – PR128 ≤ 5 %

– Then check the system faults, and clear any stored faults,
– if there are no stored faults, deal with present faults,
– clear the faults from the computer memory.

Carry out a road test followed by a **complete check** with the **diagnostic tool**.

End of the procedure.

GETtheMANUALS.org

REPLACING THE DAMPER VALVE

After replacing the damper valve, reconfigure the computer.
The system must be configured via the diagnostic socket using the RENAULT CLIP tool.

➡ **PROCEDURE to be followed after the damper valve is replaced:**
– Switch on the ignition,
– establish dialogue with the injection computer,
– run command **SC036 Reinitialise programming**,
– select **Damper valve** as the type of operation, then follow the instructions given by the **diagnostic tool**,
– switch off the ignition,
– wait for **the diagnostic tool** message (maximum time **8 minutes**): **"Communication lost with the computer: EDC16C36, check the connection of the tool and computer power supply"**, before switching the ignition back on.

Check that **PR420 Damper valve error counter** = 0,
– then check the system faults, and clear any stored faults,
– if there are no stored faults, deal with present faults,
– clear the faults from the computer memory.

Carry out a road test followed by a **complete check** with **the diagnostic tool**.

REPLACING THE PARTICLE FILTER

After replacing the particle filter, reconfigure the computer.
The system must be configured via the diagnostic socket using the RENAULT CLIP tool.

➡ **PROCEDURE to be followed after the particle filter is replaced:**
– Switch on the ignition,
– establish dialogue with the injection computer,
– run command **SC036 Reinitialise programming**,
– select **After particle filter replacement** as the operation type, then follow the instructions given by the **diagnostic tool**,
– switch off the ignition,
– wait for the **diagnostic tool** message (maximum time **8 minutes**): **"Communication lost with computer: EDC16C36, check the tool connection and computer power supply"**, before switching the ignition back on.
– clear the faults from the computer memory (this operation must be carried out within **3 minutes** of the ignition being switched on).

Carry out a road test followed by a **complete check** with the **diagnostic tool**.

GETtheMANUALS.org

Summary of available configuration readings

NOTES	Configuration readings are used to check the state of configurations performed. The configuration readings cannot be changed. The computer is configured as soon as the one of the vehicle's optional system components is operated. In the event of a fault, consult the interpretation of command **RZ005 "Programming"**.

LC009: Heating and air conditioning system
WITH OR WITHOUT

LC056: Heating elements
WITH OR WITHOUT

LC065: Water in diesel fuel sensor
WITH OR WITHOUT

LC120: Cruise control
WITH OR WITHOUT

LC121: Speed limiter
WITH OR WITHOUT

GETtheMANUALS.org

Management of instrument panel warning lights according to the faults notified.

Fault	DTC code in hexadecimal	Level 1 fault warning light (orange SERVICE warning light)	Level 2 fault warning light (red STOP warning light)	No fault warning light lit	OBD warning light lit
DF001 Coolant temperature sensor circuit	115	CC.0/CO.1	-	-	-
DF002 Air temperature sensor circuit	110	-	-	CC.0/CO.1	CC.0/CO.1
DF004 Turbocharging pressure sensor circuit	235	CO.0/CC.1/ 1.DEF	-	-	CO.0/CC.1/ 1.DEF
DF007 Rail pressure sensor circuit	190	-	CC.0/CO.1 1.DEF/2.DEF	-	-
DF011 Sensor feed voltage no. 1	641	1.DEF/2.DEF	-	-	1.DEF/ 2.DEF
DF012 Sensor feed voltage no. 2	651	1.DEF/2.DEF	-	-	1.DEF/ 2.DEF
DF013 Sensor feed voltage no. 3	697	-	1.DEF/2.DEF	-	1.DEF/ 2.DEF
DF017 Pre-postheating unit control circuit	670	CC.0/CO/ CC.1/1.DEF	-	-	-
DF018 Low-speed fan assembly control circuit	480	CC.1/CO/ CC.0/1.DEF	-	-	-
DF019 High-speed fan assembly control circuit	481	CC.1/CO/ CC.0/1.DEF	-	-	-
DF025 Preheating unit fault finding connection	380	1.DEF	-	-	-
DF026 Cylinder 1 injector control circuit	201	CO	CC/1.DEF	-	CO/CC/ 1.DEF
DF027 Cylinder 2 injector control circuit	202	CO	CC/1.DEF	-	CO/CC/ 1.DEF
DF028 Cylinder 3 injector control circuit	203	CO	CC/1.DEF	-	CO/CC/ 1.DEF
DF029 Cylinder 4 injector control circuit	204	CO	CC/1.DEF	-	CO/CC/ 1.DEF

GETtheMANUALS.org

Management of instrument panel warning lights according to the faults notified.

Fault	DTC code in hexadecimal	Level 1 fault warning light (orange SERVICE warning light)	Level 2 fault warning light (red STOP warning light)	No fault warning light lit	OBD warning light lit
DF032 Thermoplunger 1 relay control circuit	1641	-	-	CC.1/CC.0/ CO/1.DEF	-
DF033 Thermoplunger 2 relay control circuit	1642	-	-	CC.1/CC.0/ CO/1.DEF	-
DF034 Thermoplunger 3 relay control circuit	1643	-	-	CC.1/CC.0/ CO/1.DEF	-
DF038 Computer	606	1.DEF/ 3.DEF	1.DEF/2.DEF	1.DEF	-
DF046 Battery voltage	560	-	-	1.DEF/ 2.DEF/ 3.DEF	-
DF047 Computer feed voltage	2505	-	-	1.DEF	-
DF051 Cruise control/speed limiter function	575	-	-	1.DEF	-
DF053 Rail pressure regulation function	89	3.DEF/2.DEF	1.DEF/ 4.DEF/3.DEF	-	-
DF054 Turbocharging solenoid valve control circuit	45	CC.1/CC.0/ CO/ 1.DEF	-	-	CC.1/CC.0/ CO/1.DEF
DF055 Turbocharging pressure regulation circuit	2263	1.DEF/2.DEF	-	-	1.DEF/ 2.DEF
DF056 Air flowmeter circuit	100	CO.0/CC.1/ 1.DEF	-	-	CO.0/CC.1/ 1.DEF
DF059 Combustion misfire on cylinder 1	301	-	-	X	-
DF060 Combustion misfire on cylinder 2	302	-	-	X	-
DF061 Combustion misfire on cylinder 3	303	-	-	X	-
DF062 Combustion misfire on cylinder 4	304	-	-	X	-
DF065 Combustion misfire	300	-	-	1.DEF	-
DF069 Impact detected signal	1620	-	1.DEF	-	-

GETtheMANUALS.org

Management of instrument panel warning lights according to the faults notified.

Fault	DTC code in hexadecimal	Level 1 fault warning light (orange SERVICE warning light)	Level 2 fault warning light (red STOP warning light)	No fault warning light lit	OBD warning light lit
DF091 Vehicle speed signal	500	-	-	1.DEF	-
DF098 Fuel temperature sensor circuit	180	-	-	CC.0/CO.1	-
DF107 Computer memory	62F	1.DEF	-	-	1.DEF
DF119 Camshaft sensor signal	340	1.DEF/2.DEF	-	-	-
DF120 Engine speed sensor signal	335	-	1.DEF/2.DEF		
DF151 Main relay circuit	685	1.DEF/2.DEF	-	-	-
DF165 Accelerator pedal position sensor circuit	2299	-	1.DEF/2.DEF	3.DEF	-
DF195 Camshaft/engine speed sensor consistency	16	-	-	1.DEF	-
DF196 Pedal sensor circuit gang 1	225	CO.0/CC.1/ 1.DEF	-	-	-
DF198 Pedal sensor circuit gang 2	2120	CO.0/CC.1/ 1.DEF	-	-	-
DF200 Atmospheric pressure sensor	2226	1.DEF/2.DEF	-	-	1.DEF/ 2.DEF
DF209 EGR valve position sensor circuit	409	-	-	CC.1/CO.0	CC.1/CO.0
DF226 Damper valve circuit	120	CO/CC.0/ CC.1/CC/ 1.DEF/2.DEF	-	3.DEF	-
DF228 Brake signal	571	-	-	1.DEF/ 2.DEF	-
DF249 Injector control	62B	-	1.DEF	-	-

GETtheMANUALS.org

Management of instrument panel warning lights according to the faults notified.

Fault	DTC code in hexadecimal	Level 1 fault warning light (orange SERVICE warning light)	Level 2 fault warning light (red STOP warning light)	No fault warning light lit	OBD warning light lit
DF272 EGR valve control circuit	487	-	-	CO/CC.1/ CC.0/CC	CO/CC.1/ CC.0/CC
DF276 Injector code programming	611	1.DEF/2.DEF	-	-	-
DF293 Water in diesel fuel detector	2269	-	-	1.DEF	-
DF304 EGR by-pass circuit	2425	-	-	CO/CC.0/ CC.1/1.DEF	-
DF308 Clogged particle filter	242F	X	-	-	-
DF309 Particle filter downstream temp* sensor	242A	-	-	CO.1/CC.0	-
DF310 Particle filter upstream temp* sensor	2031	CO.1/CC.0	-	-	-
DF311 Failed regenerations limit exceeded	1435	X		-	-
DF312 Speed request	1436	-		X	-
DF315 Particle filter diff.* pressure sensor	2452	CO/ CO.0CC.1/		-	CO/ CO.0CC.1/
DF316 Particle filter diff* pressure	2453	1.DEF/2.DEF/ 3.DEF		-	-
DF502 Cruise control or speed limiter button	565	-		1.DEF	-
DF504 Automatic transmission	C101	-		1.DEF	1.DEF
DF643 Rail pressure regulator circuit	90	-	CO/CC.0/ CC.1/1.DEF	-	-

* diff: differential
* temp: temperature

GETtheMANUALS.org

Fault	DTC code in hexadecimal	Level 1 fault warning light (orange SERVICE warning light)	Level 2 fault warning light (red STOP warning light)	No fault warning light lit	OBD warning light lit
DF647 EGR valve position regulation	488	1.DEF/2.DEF/ 3.DEF		4.DEF/ 5.DEF	1.DEF/ 2.DEF 3.DEF/ 4.DEF/ 5.DEF
DF652 Turbine upstream temperature sensor circuit	544	-		CC.0/CO.1	-
DF890 Movement during particle filter regen.*	297	-	-	X	-
DF891 Group 1 injectors feed	2146	-	1.DEF/2.DEF	-	-
DF892 Group 2 injectors feed	2149	-	1.DEF/2.DEF	-	-
DF953 Particle filter absent	2002	-	-	1.DEF	-
DF967 Richness ratio sensor circuit	130	-	-	CC.0/CC.1/ CO/1.DEF/ 2.DEF/ 3.DEF	-
DF970 Richness ratio sensor heater circuit	135	-	-	CC.0/CC.1/ CO/1.DEF/ 2.DEF/ 3.DEF	-
DF980 Richness ratio sensor function	2A00	-	-	1.DEF/ 2.DEF/ 3.DEF	-

* regener: regeneration

GETtheMANUALS.org

DF001 PRESENT OR STORED	COOLANT TEMPERATURE SENSOR CIRCUIT CC.0: Short circuit to earth CO.1: Open circuit or short circuit to +12 V

NOTES	**Priorities when dealing with a number of faults:** Deal with fault **DF046 Battery voltage** first if it is present or stored.
	Conditions for applying the fault finding procedure to stored faults: The fault is declared present after: – the ignition is switched on, – starting the engine, – a road test.
	Special notes: If the fault is present: – the engine management overrides the EGR function, – the heating elements are no longer controlled, – the coolant temperature: **PR064 Coolant temperature** is fixed at **118°C**, – the preheating phase is greater than **10 seconds**, – the fan assembly is permanently supplied, – **ET587 Recycled exhaust gas cooling** is **ACTIVE**. The **level 1** warning light is illuminated. Use bornier **Elé. 1681** for any operations on the computer connectors.
	Use the **Espace IV ph2, Laguna II ph2, Vel Satis ph2** wiring diagram Technical Note.

CC.0	***NOTES***	None.

Check the coolant temperature sensor connections.
Check the engine management computer connections.
If there is a repair method (see **Technical Note 6015A, Repairing electrical wiring, Wiring: Precautions for repair**), repair the wiring, otherwise replace it.

AFTER REPAIR	Deal with any other faults. Clear the fault memory. Switch off the ignition until the end of the power-latch phase, and carry out a road test followed by a check with the **diagnostic tool**.

EDC16C36_V08_DF001/EDC16C36_V04_DF001

GETtheMANUALS.org

DF001 CONTINUED 1	

Measure **the resistance** of the coolant temperature sensor.
Replace the sensor if the resistance is not:
12460 Ω ± 1128 Ω at - 10°C
2252 Ω ± 112 Ω at + 25°C
811 Ω ± 39 Ω at + 50°C
283 Ω ± 8 Ω at + 80°C
115 Ω ± 3 Ω at + 110°C

Check the **insulation** from **earth** of the following connection:
– Connection code **3C** between components **120 and 244**.
If the connection is faulty and there is a repair procedure (see **Technical Note 6015A, Electrical wiring repair, Wiring: Precautions for repair**), repair the wiring, otherwise replace it.

If the fault is still present, contact the Techline.

AFTER REPAIR	Deal with any other faults. Clear the fault memory. Switch off the ignition until the end of the power-latch phase, and carry out a road test followed by a check with the **diagnostic tool**.

GETtheMANUALS.org

DF001 CONTINUED 2	

CO.1	*NOTES*	None.

Check the coolant temperature sensor connections.
Check the engine management computer connections.
If there is a repair procedure (see **Technical Note 6015A, Repairing electrical wiring, Wiring: Precautions for repair**) repair the wiring, otherwise replace it.

Measure **the resistance** of the coolant temperature sensor.
Replace the sensor if the resistance is not:
12460 Ω ± 1128 Ω at - 10°C
2252 Ω ± 112 Ω at + 25°C
811 Ω ± 39 Ω at + 50°C
283 Ω ± 8 Ω at + 80°C
115 Ω ± 3 Ω at + 110°C

Check **the insulation** in relation to **+12 V** of the following connection:
– Connection code **3JK** between components **120 and 244**.

Check the **continuity** of the following connections:
– Connection code **3C** between components **120 and 244**.
– Connection code **3JK** between components **120 and 244**.
If the connection or connections are faulty and there is a repair procedure (see **Technical Note 6015A, Electrical wiring repair, Wiring: Precautions for repair**) repair the wiring, otherwise replace it.

If the fault is still present, contact the Techline.

AFTER REPAIR	Deal with any other faults. Clear the fault memory. Switch off the ignition until the end of the power-latch phase, and carry out a road test followed by a check with the **diagnostic tool**.

GETtheMANUALS.org

DF002 PRESENT OR STORED	AIR TEMPERATURE SENSOR CIRCUIT CC.0: Short circuit to earth CO.1: Open circuit or short circuit to +12 V

NOTES	**Priorities when dealing with a number of faults:** Deal with fault **DF046 Battery voltage** first if it is present or stored.
	Conditions for applying the fault finding procedure to stored faults: The fault is declared present after: – the ignition is switched on, – starting the engine, – a road test.
	Special notes: If the fault is present: – the heating elements are disabled, – the inlet air temperature is in defect mode, **PR058 Air temperature = 45°C**. The air temperature sensor is integrated into the air flowmeter. Use bornier **Elé. 1681** for all operations on the connectors of the engine management computer.
	Use the **Espace IV ph2, Laguna II ph2, Vel Satis ph2** wiring diagram Technical Note.

CC.0	***NOTES***	None.

Check the air flowmeter connectors.
Check the engine management computer connections.
If there is a repair method (see **Technical Note 6015A, Repairing electrical wiring, Wiring: Precautions for repair**), repair the wiring, otherwise replace it.

AFTER REPAIR	Deal with any other faults. Clear the fault memory. Switch off the ignition until the end of the power-latch phase, and carry out a road test followed by a check with the **diagnostic tool**.

EDC16C36_V08_DF002/EDC16C36_V04_DF002

GETtheMANUALS.org

DF002 CONTINUED 1	

Measure the **resistance** between **connections 3ABQ and 3DW of component 799**. Replace the air flowmeter if the resistance is not **between 100 Ω and 40 kΩ**.
With the flowmeter disconnected, check the **insulation** to **earth** of the following connections: – Connection code **3DW**, – Connection code **3ABQ**, between components **120 and 799**. If the connection or connections are faulty and there is a repair procedure (see **Technical Note 6015A, Electrical wiring repair, Wiring: Precautions for repair**) repair the wiring, otherwise replace it.
If the fault is still present, contact the Techline.

AFTER REPAIR	Deal with any other faults. Clear the fault memory. Switch off the ignition until the end of the power-latch phase, and carry out a road test followed by a check with the **diagnostic tool**.

GETtheMANUALS.org

DF002 CONTINUED 2	

CO.1	*NOTES*	None.

Check the air flowmeter connectors.
Check the engine management computer connections.
If there is a repair method (see **Technical Note 6015A, Repairing electrical wiring, Wiring: Precautions for repair**), repair the wiring, otherwise replace it.

Measure the **resistance** between **connections 3ABQ and 3DW of component 799**:
Replace the air flowmeter if the resistance is not **between 100 Ω and 40 kΩ**.

Check the **insulation** in relation to **+ 12 V** of the following connections:
– Connection code **3ABQ**,
– Connection code **3DW**,
between components **120 and 799**.

Check the **continuity** of the following connections:
– Connection code **3ABQ** between components **120 and 799**.
– Connection code **3DW** between components **120 and 799**.
If the connection or connections are faulty and there is a repair procedure (see **Technical Note 6015A, Electrical wiring repair, Wiring: Precautions for repair**) repair the wiring, otherwise replace it.

If the fault is still present, contact the Techline.

AFTER REPAIR	Deal with any other faults. Clear the fault memory. Switch off the ignition until the end of the power-latch phase, and carry out a road test followed by a check with the **diagnostic tool**.

GETtheMANUALS.org

DF004 PRESENT OR STORED	TURBOCHARGING PRESSURE SENSOR CIRCUIT CO.0: Open circuit or short circuit to earth CC.1: Short-circuit to + 12 V 1.DEF: Consistency between turbocharging pressure and atmospheric pressure

NOTES	**Priorities when dealing with a number of faults:** Deal with faults **DF011 Sensor feed voltage no. 1 and DF046 Battery voltage** first, if they are present or stored.
	Conditions for applying the fault finding procedure to stored faults: The fault is declared present after: – the ignition is switched on, – starting the engine, – a road test.
	Special notes: If the fault is present: – the injection computer disables particle filter regeneration in the after-sales mode, – the EGR function is inhibited by the engine management computer, – engine torque limited, – turbocharging pressure is in defect mode, – **PR041 Turbocharging pressure = 750 mbar**, – the **level 1** and **European On Board Diagnostic** warning lights are lit. Use bornier **Elé. 1681** for any work on the injection computer connectors.
	IMPORTANT This fault can result in a rapid and significant fouling of the particle filter.
	Use the **Espace IV ph2, Laguna II ph2, Vel Satis ph2** wiring diagram Technical Note.

AFTER REPAIR	Deal with any other faults. Clear the fault memory. Switch off the ignition until the end of the power-latch phase, and carry out a road test followed by a check with the **diagnostic tool**.

EDC16C36_V08_DF004/EDC16C36_V04_DF004

GETtheMANUALS.org

DF004 CONTINUED 1	

CO.0	***NOTES***	None.

Check the turbocharger pressure sensor connections.
Check the engine management computer connections.
If there is a repair method (see **Technical Note 6015A, Repairing electrical wiring, Wiring: Precautions for repair**), repair the wiring, otherwise replace it.

Check **the continuity** and **insulation** to **earth** of the following connections:
– Connection code **3LQ**,
– Connection code **3LP**,
– Connection code **3LN**,
between components **120 and 1071**.
If the connection or connections are faulty and there is a repair procedure (see **Technical Note 6015A, Electrical wiring repair, Wiring: Precautions for repair**) repair the wiring, otherwise replace it.

If the fault is still present, replace the turbocharger pressure sensor.

AFTER REPAIR	Deal with any other faults. Clear the fault memory. Switch off the ignition until the end of the power-latch phase, and carry out a road test followed by a check with the **diagnostic tool**.

GETtheMANUALS.org

DF004 CONTINUED 2	

CC.1	*NOTES*	None.

Check the turbocharger pressure sensor connections.
Check the engine management computer connections.
If there is a repair method (see **Technical Note 6015A, Repairing electrical wiring, Wiring: Precautions for repair**), repair the wiring, otherwise replace it.

Check the **insulation** in relation to **+ 12 V** or **+ 5 V** (computer feed) of the following connections:
– Connection code **3LN**,
– Connection code **3LP**,
between components **120 and 1071**.

Check **the continuity** of the following connection:
– Connection code **3LN** between components **120 and 1071**.
If the connection or connections are faulty and there is a repair procedure (see **Technical Note 6015A, Electrical wiring repair, Wiring: Precautions for repair**) repair the wiring, otherwise replace it.

If the fault is still present, replace the turbocharger pressure sensor.

1.DEF	*NOTES*	None.

Check the turbocharger pressure sensor connections.
Check the engine management computer connections.
If there is a repair method (see **Technical Note 6015A, Repairing electrical wiring, Wiring: Precautions for repair**), repair the wiring, otherwise replace it.

Perform fault finding procedure on parameter **PR041 Turbocharging pressure**.

AFTER REPAIR	Deal with any other faults. Clear the fault memory. Switch off the ignition until the end of the power-latch phase, and carry out a road test followed by a check with the **diagnostic tool**.

GETtheMANUALS.org

DF007 PRESENT OR STORED	RAIL PRESSURE SENSOR CIRCUIT CC.0: Short circuit to earth CO.1: Open circuit or short circuit to + 12 V 1.DEF: Above maximum threshold 2.DEF: Below minimum threshold

NOTES	**Priorities when dealing with a number of faults:** Deal with fault **DF013 Sensor feed voltage No. 3** first, if it is present or stored.
	Conditions for applying the fault finding procedure to stored faults: The fault is declared present after: – the ignition is switched on, – starting the engine, – a road test.
	Special notes: If the fault is present: – The rail pressure is in defect mode **PR038 rail pressure ≤ 1150 bar**, – the **level 2** warning light is lit. Use bornier **Elé. 1681** for any work on the injection computer connectors.
	Use the **Espace IV ph2, Laguna II ph2, Vel Satis ph2** wiring diagram Technical Note.

AFTER REPAIR	Deal with any other faults. Clear the fault memory. Switch off the ignition until the end of the power-latch phase, and carry out a road test followed by a check with the **diagnostic tool**.

EDC16C36_V08_DF007/EDC16C36_V04_DF007

GETtheMANUALS.org

DF007 CONTINUED 1	

CC.0	*NOTES*	**Special note:** The engine stops when this fault appears.

Check the rail pressure sensor connectors.
Check the injection computer connections.
If there is a repair method (see **Technical Note 6015A, Repairing electrical wiring, Wiring: Precautions for repair**), repair the wiring, otherwise replace it.

Check the **insulation to earth** of the following connections:
– Connection code **3LX**,
– Connection code **3LY**,
between components **120 and 1032**.

Check **the continuity** of the following connection:
– Connection code **3LZ** between components **120 and 1032**.
If the connection or connections are faulty and there is a repair procedure (see **Technical Note 6015A, Electrical wiring repair, Wiring: Precautions for repair**) repair the wiring, otherwise replace it.

If the fault is still present, contact the Techline.

AFTER REPAIR	Deal with any other faults. Clear the fault memory. Switch off the ignition until the end of the power-latch phase, and carry out a road test followed by a check with the **diagnostic tool**.

GETtheMANUALS.org

DF007 CONTINUED 2	

CO.1	*NOTES*	**Special note:** The engine stops when this fault appears.

Check the rail pressure sensor connectors.
Check the injection computer connections.
If there is a repair method (see **Technical Note 6015A, Repairing electrical wiring, Wiring: Precautions for repair**), repair the wiring, otherwise replace it.

Check the **continuity** of the following connections:
– Connection code **3LZ**,
– Connection code **3LX**,
– Connection code **3LY**,
between components **120 and 1032**.

Check the **insulation** in relation to **+ 12 V** or **+ 5 V** (computer feed) of the following connections:
– Connection code **3LX**,
– Connection code **3LY**,
between components **120 and 1032**.
If the connection or connections are faulty and there is a repair procedure (see **Technical Note 6015A, Electrical wiring repair, Wiring: Precautions for repair**) repair the wiring, otherwise replace it.

If the fault is still present, contact the Techline.

AFTER REPAIR	Deal with any other faults. Clear the fault memory. Switch off the ignition until the end of the power-latch phase, and carry out a road test followed by a check with the **diagnostic tool**.

GETtheMANUALS.org

DF007 CONTINUED 3	

1.DEF **2.DEF**	***NOTES***	The fault is declared present or stored after an attempt to start or after starting, with the engine cold, several hours after the last trip (the difference in the coolant temperature from the last engine stop and the present attempt to start must be at least **60°C**).

Check the rail pressure sensor connectors. Check the injection computer connections. If there is a repair method (see **Technical Note 6015A, Repairing electrical wiring, Wiring: Precautions for repair**), repair the wiring, otherwise replace it.
Check that there are no external diesel leaks from the high pressure fuel circuit.
Check the **continuity and absence of interference resistance** on the following connections: – Connection code **3LZ**, – Connection code **3LX**, – Connection code **3LY**, between components **120 and 1032**. If the connection or connections are faulty and there is a repair procedure (see **Technical Note 6015A, Electrical wiring repair, Wiring: Precautions for repair**) repair the wiring, otherwise replace it.
With the ignition on and the engine stopped for over **1 minute**: View parameter **PR038 Rail pressure**. – If the pressure is below **90 bar**, the sensor is in order. – If the pressure is above **90 bar**, contact the Techline.
If the fault is still present, contact the Techline.

AFTER REPAIR	Deal with any other faults. Clear the fault memory. Switch off the ignition until the end of the power-latch phase, and carry out a road test followed by a check with the **diagnostic tool**.

GETtheMANUALS.org

DF011 PRESENT OR STORED	SENSOR SUPPLY VOLTAGE No. 1 1.DEF: Above maximum threshold 2.DEF: Below minimum threshold

NOTES	**Conditions for applying the fault finding procedure to stored faults:** The fault is declared present after: – the ignition is switched on, – starting the engine, – a road test.
	Special notes: If the fault is present: – air conditioning is switched off, – engine torque limited, – the cruise control/speed limiter function is switched off, – the heating elements are switched off, – the EGR function is inhibited by the engine management computer, – safe mode on the pedal sensor: use the value of **gang 2** instead of **gang 1**, – the **level 1** and **European On Board Diagnostic** warning lights are lit. Use bornier **Elé. 1681** for all operations on the connectors of the engine management computer.
	Use the **Espace IV ph2, Laguna II ph2, Vel Satis ph2** wiring diagram Technical Note.

AFTER REPAIR	Deal with any other faults. Clear the fault memory. Switch off the ignition until the end of the power-latch phase, and carry out a road test followed by a check with the **diagnostic tool**.

EDC16C36_V08_DF011/EDC16C36_V04_DF011

GETtheMANUALS.org

DF011 CONTINUED 1	

1.DEF	*NOTES*	None.

Note:
No. 1 is for the following component:
– pedal sensor (gang 1),
– turbocharger pressure sensor.

Measure the feed voltage on the following sensors:
– Connection code **3LR** of component **921**.
– Connection code **3LQ** of component **1071**.
If the voltage is more than **+ 5.1 V**, disconnect the sensor connectors one by one.
If, after the **pedal sensor** has been disconnected, the voltage is still greater than **+ 5.1 V**, check **the insulation in relation to + 12 V** of the following connection:
– Connection code **3LR** between components **120 and 921**.

If, after the **turbocharger pressure** sensor has been disconnected, the voltage is still greater than **+ 5.1 V**, check the **insulation in relation to + 12 V** of the following connection:
– Connection code **3LQ** between components **120 and 1071**.
If the connection or connections are faulty and there is a repair procedure (see **Technical Note 6015A, Electrical wiring repair, Wiring: Precautions for repair**) repair the wiring, otherwise replace it.
Clear the faults created by the multiple disconnections.

Carefully examine the engine management computer connections (for conductive particles, bent pins).

If the fault is still present, contact the Techline.

AFTER REPAIR	Deal with any other faults. Clear the fault memory. Switch off the ignition until the end of the power-latch phase, and carry out a road test followed by a check with the **diagnostic tool**.

GETtheMANUALS.org

DF011 CONTINUED 2	

2.DEF	*NOTES*	None.

Note:
No. 1 is for the following component:
– pedal sensor (gang 1),
– turbocharger pressure sensor.

Measure the feed voltage on the following sensors:
– Connection code **3LR** of component **921**.
– Connection code **3LQ** of component **1071**.
If the voltage is less than **+ 4.9 V**, disconnect the sensor connectors one by one.
If, after the **pedal sensor** has been disconnected, the voltage is less than **+ 4.9 V**. Check the insulation to **earth** of the following connection:
– Connection code **3LR** between components **120 and 921**.

If, after the **turbocharger pressure sensor** has been disconnected, the voltage is less than **+ 4.9 V.** check the insulation to **earth** of the following connection:
– Connection code **3LQ** between components **120 and 1071**.

If the connection or connections are faulty and there is a repair procedure (see **Technical Note 6015A, Electrical wiring repair, Wiring: Precautions for repair**) repair the wiring, otherwise replace it.
Clear the faults created by the multiple disconnections.

Carefully examine the engine management computer connections (for conductive particles, bent pins).

If the fault is still present, contact the Techline.

AFTER REPAIR	Deal with any other faults. Clear the fault memory. Switch off the ignition until the end of the power-latch phase, and carry out a road test followed by a check with the **diagnostic tool**.

GETtheMANUALS.org

DF012 PRESENT OR STORED	SENSOR SUPPLY VOLTAGE No. 2 1.DEF: Above maximum threshold 2.DEF: Below minimum threshold

NOTES	**Conditions for applying the fault finding procedure to stored faults:** The fault is declared present after: – the ignition is switched on, – starting the engine, – a road test.
	Special notes: If the fault is present: – engine torque limited, – the cruise control/speed limiter function is switched off, – the heating elements are switched off, – air conditioning is switched off, – the fan assembly is permanently supplied, – the **level 1** and **European On Board Diagnostic** warning lights are lit. Use bornier **Elé. 1681** for all operations on the connectors of the engine management computer.
	Use the **Espace IV ph2, Laguna II ph2, Vel Satis ph2** wiring diagram Technical Note.

AFTER REPAIR	Deal with any other faults. Clear the fault memory. Switch off the ignition until the end of the power-latch phase, and carry out a road test followed by a check with the **diagnostic tool**.

EDC16C36_V08_DF012/EDC16C36_V04_DF012

GETtheMANUALS.org

DF012 CONTINUED 1	

1.DEF	***NOTES***	Note: No. 2 is for the following components: – pedal sensor (gang 2), – EGR valve position sensor, – cruise control/speed limiter button (on steering wheel), – particle filter differential pressure sensor.

Measure the feed voltage on the following sensors:
– Connection code **3LU** of component **921**.
– Connection code **3AAQ** of component **1290**.
– Connection code **3GC** of component **1460**.
If the voltage is more than **+ 5.1 V**, disconnect the sensor connectors one by one.

If, after the **pedal sensor** has been disconnected, the voltage is greater than **+ 5.1 V**, check **the insulation in relation to + 12 V** of the following connection:
– Connection code **3LU** between components **120 and 921**.

If, after the **EGR valve** has been disconnected, the voltage is still greater than **+ 5.1 V**, check the **insulation in relation to + 12 V** of the following connection:
– Connection code **3GC** between components **120 and 1460**.

If, after the **differential pressure sensor** has been disconnected, the voltage is still greater than **+ 5.1 V**, check the **insulation in relation to + 12 V** of the following connection:
– Connection code **3AAQ** between components **120 and 1290**.

If the fault is still present, carry out a conformity check on **ET703 Cruise control/speed limiter buttons**.
If the connection or connections are faulty and there is a repair procedure (see **Technical Note 6015A, Electrical wiring repair, Wiring: Precautions for repair**) repair the wiring, otherwise replace it.
Clear the faults created by the multiple disconnections.

Carefully examine the engine management computer connections (for conductive particles, bent pins).

If the fault is still present, contact the Techline.

AFTER REPAIR	Deal with any other faults. Clear the fault memory. Switch off the ignition until the end of the power-latch phase, and carry out a road test followed by a check with the **diagnostic tool**.

GETtheMANUALS.org

DF012 CONTINUED 2	

2.DEF	***NOTES***	Note: – No. 2 is for the following components: – pedal sensor (gang 2), – EGR valve position sensor, – cruise control/speed limiter button (on steering wheel), – particle filter differential pressure sensor.

Measure the feed voltage on the following sensors:
– Connection code **3LU** of component **921**.
– Connection code **3AAQ** of component **1290**.
– Connection code **3GC** of component **1460**.
If the voltage is **less than 4.9 V**, disconnect the sensor connectors one by one.

If, after the **pedal sensor** has been disconnected, the voltage is **less than 4.9 V**, check the **insulation to earth** of the following connection:
– Connection code **3LU** between components **120** and **921**.

If, after the **EGR valve** has been disconnected, the voltage is **less than 4.9 V**, check the **insulation to earth** of the following connection:
– Connection code **3GC** between components **120** and **1460**.

If, after the **differential pressure sensor** has been disconnected, the voltage is **less than 4.9 V**, check the **insulation to earth** of the following connection:
– Connection code **3AAQ** between components **120** and **1290**.

If the fault is still present, carry out a conformity check on **ET703 Cruise control/speed limiter buttons**.
If the connection or connections are faulty and there is a repair procedure (see **Technical Note 6015A, Electrical wiring repair, Wiring: Precautions for repair**) repair the wiring, otherwise replace it.
Clear the faults created by the multiple disconnections.

Carefully examine the engine management computer connections (for conductive particles, bent pins).

If the fault is still present, contact the Techline.

AFTER REPAIR	Deal with any other faults. Clear the fault memory. Switch off the ignition until the end of the power-latch phase, and carry out a road test followed by a check with the **diagnostic tool**.

GETtheMANUALS.org

DF013 PRESENT OR STORED	SENSOR SUPPLY VOLTAGE No. 3 1.DEF: Above maximum threshold 2.DEF: Below minimum threshold

NOTES	**Conditions for applying the fault finding procedure to stored faults:** The fault is declared present after: – the ignition is switched on, – starting the engine, – a road test.
	Special notes: If the fault is present, – engine torque limited, – the **level 1** and **European On Board Diagnostic** warning lights are lit. Use bornier **Elé. 1681** for all operations on the connectors of the engine management computer.
	Use the **Espace IV ph2, Laguna II ph2, Vel Satis ph2** wiring diagram Technical Note.

AFTER REPAIR	Deal with any other faults. Clear the fault memory. Switch off the ignition until the end of the power-latch phase, and carry out a road test followed by a check with the **diagnostic tool**.

EDC16C36_V08_DF013/EDC16C36_V04_DF013

GETtheMANUALS.org

DF013 CONTINUED 1	

1.DEF	*NOTES*	None.

Note:
Feed No. 3 is for the following components:
– air flowmeter,
– rail pressure sensor.

Measure the feed voltage on the following sensors:
– Connection code **3KJ** of component **799**.
– Connection code **3LX** of component **1032**.
If the voltage is more than **+ 5.1 V**, disconnect the sensor connectors one by one.

If, after the a**ir flowmeter** has been disconnected, the voltage is **greater than + 5.1 V**, check the **insulation in relation to + 12 V** of the following connection:
– Connection code **3KJ** between components **120 and 799**.

If, after the **rail pressure sensor** has been disconnected, the voltage is **greater than + 5.1 V**, check the **insulation in relation to + 12 V** of the following connection:
– Connection code **3LX** between components **120 and 1032**.
If the connection or connections are faulty and there is a repair procedure (see **Technical Note 6015A, Electrical wiring repair, Wiring: Precautions for repair**) repair the wiring, otherwise replace it.
Clear the faults created by the multiple disconnections.

Carefully examine the engine management computer connections (for conductive particles, bent pins).

If the fault is still present, contact the Techline.

AFTER REPAIR	Deal with any other faults. Clear the fault memory. Switch off the ignition until the end of the power-latch phase, and carry out a road test followed by a check with the **diagnostic tool**.

GETtheMANUALS.org

DF013 CONTINUED 2	

2.DEF	*NOTES*	None.

Note:
Feed No. 3 is for the following components:
– air flowmeter,
– rail pressure sensor.

Measure the feed voltage on the following sensors:
– Connection code **3KJ** of component **799**.
– Connection code **3LX** of component **1032**.

If the voltage is below **4.9 V**, disconnect the sensor connectors one by one.

If, after the **air flowmeter** has been disconnected, the voltage is **less than 4.9 V**, check **the insulation to earth** of the following connection:
– Connection code **3KJ** between components **120 and 799**.

If, after the **rail pressure sensor** has been disconnected, the voltage is **less than 4.9 V**, check the insulation to **earth** of the following connection:
– Connection code **3LX** between components **120 and 1032**.

If the connection or connections are faulty and there is a repair procedure (see **Technical Note 6015A, Electrical wiring repair, Wiring: Precautions for repair**) repair the wiring, otherwise replace it.
Clear the faults created by the multiple disconnections.

Carefully examine the engine management computer connections (for conductive particles, bent pins).

If the fault is still present, contact the Techline.

AFTER REPAIR	Deal with any other faults. Clear the fault memory. Switch off the ignition until the end of the power-latch phase, and carry out a road test followed by a check with the **diagnostic tool**.

GETtheMANUALS.org

DF017 PRESENT OR STORED	PRE-POSTHEATING UNIT CONTROL CIRCUIT CO: Open circuit CC.1: Short circuit to + 12 V CC.0: Short circuit to earth 1.DEF: Internal electronic fault

NOTES	**Conditions for applying the fault finding procedure to stored faults:** The fault is declared present after: – the ignition is switched on, – starting the engine, – a road test, – a relay actuation using command **AC037 Preheating relay**.
	Special notes: – preheating inhibited. Use bornier **Elé. 1681** for all operations on the connectors of the engine management computer.
	Use the **Espace IV ph2, Laguna II ph2, Vel Satis ph2** wiring diagram Technical Note.

CO	***NOTES***	None.

Check the preheating unit connections. Check the engine management computer connections. If there is a repair method (see **Technical Note 6015A, Repairing electrical wiring, Wiring: Precautions for repair**), repair the wiring, otherwise replace it.
Check the **continuity** of the following connections: – Connection code **3FY**, – Connection code **3FF**, between components **120 and 257**. Check for + **12 V battery** on the preheating unit connector. – Connection code **3FY** of component **257**. If the connection or connections are faulty and there is a repair procedure (see **Technical Note 6015A, Electrical wiring repair, Wiring: Precautions for repair**) repair the wiring, otherwise replace it. If the fault is still present, replace the pre-postheating unit.

AFTER REPAIR	Deal with any other faults. Clear the fault memory. Switch off the ignition until the end of the power-latch phase, and carry out a road test followed by a check with the **diagnostic tool**.

EDC16C36_V08_DF017/EDC16C36_V04_DF017

GETtheMANUALS.org

DF017 CONTINUED 1	

CC.1	***NOTES***	None.

Check the preheating unit connections.
Check the engine management computer connections.
If there is a repair procedure (see **Technical Note 6015A, Repairing electrical wiring, Wiring: Precautions for repair**) repair the wiring, otherwise replace it.

Check the **insulation** in relation to **+ 12 V** of the following connections:
– Connection code **3FY**,
– Connection code **3FF**,
between components **120 and 257**.
If the connection or connections are faulty and there is a repair procedure (see **Technical Note 6015A, Electrical wiring repair, Wiring: Precautions for repair**) repair the wiring, otherwise replace it.
If the fault is still present, replace the pre-postheating unit.

AFTER REPAIR	Deal with any other faults. Clear the fault memory. Switch off the ignition until the end of the power-latch phase, and carry out a road test followed by a check with the **diagnostic tool**.

GETtheMANUALS.org

DF017 CONTINUED 2	

CC.0	***NOTES***	None.

Check the preheating unit connections.
Check the engine management computer connections.
If there is a repair method (see **Technical Note 6015A, Repairing electrical wiring, Wiring: Precautions for repair**), repair the wiring, otherwise replace it.

Check the **insulation** from **earth** of the following connections:
– Connection code **3FY**,
– Connection code **3FF**,
between components **120 and 257**.

Check for + **12 V battery** on the preheating unit connector.
– Connection code **3FY** of component **257**.

If the connection or connections are faulty and there is a repair procedure (see **Technical Note 6015A, Electrical wiring repair, Wiring: Precautions for repair**) repair the wiring, otherwise replace it.
If the fault is still present, replace the pre-postheating unit.

AFTER REPAIR	Deal with any other faults. Clear the fault memory. Switch off the ignition until the end of the power-latch phase, and carry out a road test followed by a check with the **diagnostic tool**.

GETtheMANUALS.org

DF017 CONTINUED 3	

1.DEF	***NOTES***	**Special note:** This fault appears when the control section of the computer overheats and when the preheating unit is controlled by **AC037 Preheating relay**.

Check the preheating unit connections.
Check the engine management computer connections.
If there is a repair method (see **Technical Note 6015A, Repairing electrical wiring, Wiring: Precautions for repair**), repair the wiring, otherwise replace it.

Check for **the continuity and absence of interference resistance** on the following connection:
– Connection code **3FF** between components **120 and 257**.

Check for + **12 V battery** on the preheating unit connector.
– Connection code **3FY** of component **257**.
If the connection or connections are faulty and there is a repair procedure (see **Technical Note 6015A, Electrical wiring repair, Wiring: Precautions for repair**) repair the wiring, otherwise replace it.

If the fault is still present, contact the Techline.

AFTER REPAIR	Deal with any other faults. Clear the fault memory. Switch off the ignition until the end of the power-latch phase, and carry out a road test followed by a check with the **diagnostic tool**.

GETtheMANUALS.org

DF018 PRESENT OR STORED	LOW SPEED FAN ASSEMBLY CONTROL CIRCUIT CO: Open circuit CC.1: Short circuit to + 12 V CC.0: Short circuit to earth 1.DEF: Internal electronic fault

NOTES	**Conditions for applying the fault finding procedure to stored faults:** The fault is declared present after: – the ignition is switched on. – **AC038 Low speed fan assembly relay** command is actuated.
	Special notes: – high-speed fan assembly constantly actuated, – **level 1** warning light is lit. Use bornier **Elé. 1681** for all operations on the connector of the engine management computer.
	Consult the wiring diagram Technical Note **Espace IV ph2, Laguna II ph2, Vel Satis ph2** to locate the fuses and relays concerned.

CO	***NOTES***	No low-speed fan assembly control.

Check the connections of the low-speed fan assembly relay mounting.
Check the engine management computer connections.
If there is a repair method (see **Technical Note 6015A, Repairing electrical wiring, Wiring: Precautions for repair**), repair the wiring, otherwise replace it.

Measure **the resistance** of the low-speed fan assembly relay coil.
Replace the relay if its resistance is **greater than 1 kΩ or less than 6** Ω.

Remove the low speed relay and check **the continuity** of the following connection:
– Connection code **3JN** between components **120 and 336**.

Check for **the presence** of **+ 12 V after relay** on the low-speed fan assembly relay.
– Connection code **3FB** of component **336**.
If the connection or connections are faulty and there is a repair procedure (see **Technical Note 6015A, Electrical wiring repair, Wiring: Precautions for repair**) repair the wiring, otherwise replace it.

AFTER REPAIR	Deal with any other faults. Clear the fault memory. Switch off the ignition until the end of the power-latch phase, and carry out a road test followed by a check with the **diagnostic tool**.

EDC16C36_V08_DF018/EDC16C36_V04_DF018

GETtheMANUALS.org

DF018 CONTINUED 1	

CC.1	*NOTES*	No low-speed fan assembly control.

Check the connections of the low-speed fan assembly relay mounting. Check the engine management computer connections. If there is a repair method (see **Technical Note 6015A, Repairing electrical wiring, Wiring: Precautions for repair**), repair the wiring, otherwise replace it.
Measure **the resistance** of the low-speed fan assembly relay coil. Replace the relay if its resistance is **greater than 1 kΩ or less than 6** Ω.
Remove the low-speed relay and check the **insulation** in relation to **+ 12 V** of the following connection: – Connection code **3JN** between components **120 and 336**. If the connection or connections are faulty and there is a repair procedure (see **Technical Note 6015A, Electrical wiring repair, Wiring: Precautions for repair**) repair the wiring, otherwise replace it.

AFTER REPAIR	Deal with any other faults. Clear the fault memory. Switch off the ignition until the end of the power-latch phase, and carry out a road test followed by a check with the **diagnostic tool**.

GETtheMANUALS.org

DF018 CONTINUED 2	

CC.0	*NOTES*	Low speed fan assembly constantly activated.

Check the connections of the low-speed fan assembly relay mounting.
Check the engine management computer connections.
If there is a repair method (see **Technical Note 6015A, Repairing electrical wiring, Wiring: Precautions for repair**), repair the wiring, otherwise replace it.

Measure **the resistance** of the low-speed fan assembly relay coil.
Replace the relay if its resistance is **greater than 1 kΩ or less than 6 Ω**.

Remove the low speed relay and check the **insulation** to earth of the following connection:
– Connection code **3JN** between components **120 and 336**.

Check for **the presence** of **+ 12 V after relay** on the low-speed fan assembly relay.
– Connection code **3FB** of component **336**.
If the connection or connections are faulty and there is a repair procedure (see **Technical Note 6015A, Electrical wiring repair, Wiring: Precautions for repair**) repair the wiring, otherwise replace it.

AFTER REPAIR	Deal with any other faults. Clear the fault memory. Switch off the ignition until the end of the power-latch phase, and carry out a road test followed by a check with the **diagnostic tool**.

GETtheMANUALS.org

DF018 CONTINUED 3	

1.DEF	*NOTES*	**Special note:** This fault appears when the computer control section overheats or when command **AC038 Low-speed fan assembly relay** is run.

Check the connections of the low-speed fan assembly relay mounting.
Check the engine management computer connections.
If there is a repair method (see **Technical Note 6015A, Repairing electrical wiring, Wiring: Precautions for repair**), repair the wiring, otherwise replace it.

Measure **the resistance** of the low-speed fan assembly relay coil.
Replace the relay if the resistance is **greater than 200 Ω or less than 20 Ω**.

Remove the low speed relay and check the **insulation** and **continuity** of the following connection:
– Connection code **3JN** between components **120 and 336**.

Check for **the presence** of **+ 12 V after relay** on the low-speed fan assembly relay.
– Connection code **3FB** of component **336**.
If the connection or connections are faulty and there is a repair procedure (see **Technical Note 6015A, Electrical wiring repair, Wiring: Precautions for repair**) repair the wiring, otherwise replace it.

If the fault is still present, contact the Techline

AFTER REPAIR	Deal with any other faults. Clear the fault memory. Switch off the ignition until the end of the power-latch phase, and carry out a road test followed by a check with the **diagnostic tool**.

GETtheMANUALS.org

DF019 PRESENT OR STORED	HIGH SPEED FAN ASSEMBLY CONTROL CIRCUIT CO: Open circuit CC.1: Short circuit to + 12 V CC.0: Short circuit to earth 1.DEF: Internal electronic fault

NOTES	**Conditions for applying the fault finding procedure to stored faults:** The fault is declared present after: – the ignition is switched on – clearing the fault from the memory, – the **AC039 High speed fan assembly relay** command is actuated.
	Special notes: Use bornier **Elé. 1681** for all operations on the connector of the engine management computer. – The **level 1** warning light is lit.
	Consult the wiring diagram Technical Note **Espace IV ph2, Laguna II ph2, Vel Satis ph2** to locate the fuses and relays concerned.

CO	***NOTES***	No the high-speed fan assembly control.

Check the connections of the high-speed fan assembly relay mounting.
Check the engine management computer connections.
If there is a repair method (see **Technical Note 6015A, Repairing electrical wiring, Wiring: Precautions for repair**), repair the wiring, otherwise replace it.

Measure **the resistance** of the "high-speed fan assembly" relay coil.
Replace the relay if its resistance is **greater than 1 kΩ or less than 6** Ω.

Remove the high speed relay and check **the continuity** of the following connection:
– Connection code **3JP** between components **120 and 335**.

Check for **the presence** of **+ 12 V after relay** on the high-speed fan assembly relay.
– Connection code **3FB** of component **335**.
If the connection or connections are faulty and there is a repair procedure (see **Technical Note 6015A, Electrical wiring repair, Wiring: Precautions for repair**) repair the wiring, otherwise replace it.

AFTER REPAIR	Deal with any other faults. Clear the fault memory. Switch off the ignition until the end of the power-latch phase, and carry out a road test followed by a check with the **diagnostic tool**.

EDC16C36_V08_DF019/EDC16C36_V04_DF019

GETtheMANUALS.org

DF019 CONTINUED 1	

CC.1	*NOTES*	No the high-speed fan assembly control.

Check the connections of the high-speed fan unit relay mounting. Check the engine management computer connections. If there is a repair procedure (see **Technical Note 6015A, Repairing electrical wiring, Wiring: Precautions for repair**) repair the wiring, otherwise replace it.
Measure **the resistance** of the "high-speed fan assembly" relay coil. Replace the relay if its resistance is **greater than 1 kΩ or less than 6** Ω.
Remove the high-speed relay and check the **insulation** in relation to **+ 12 V** of the following connection: – Connection code **3JP** between components **120 and 335**. If the connection is faulty and there is a repair procedure (see **Technical Note 6015A, Electrical wiring repair, Wiring: Precautions for repair**), repair the wiring, otherwise replace it.

AFTER REPAIR	Deal with any other faults. Clear the fault memory. Switch off the ignition until the end of the power-latch phase, and carry out a road test followed by a check with the **diagnostic tool**.

GETtheMANUALS.org

DF019 CONTINUED 2	

CO.0	*NOTES*	High-speed fan assembly constantly activated.

Check the connections of the high-speed fan assembly relay mounting.
Check the engine management computer connections.
If there is a repair procedure (see **Technical Note 6015A, Repairing electrical wiring, Wiring: Precautions for repair**) repair the wiring, otherwise replace it.

Measure **the resistance** of the "high-speed fan assembly" relay coil.
Replace the relay if its resistance is **greater than 1 kΩ or less than 6** Ω.

Remove the high-speed relay and check the **insulation** to **earth** of the following connection:
– Connection code **3JP** between components **120 and 335**.

Check for **the presence** of **+ 12 V after relay** on the high-speed fan assembly relay.
– Connection code **3FB** of component **335**.
If the connection or connections are faulty and there is a repair procedure (see **Technical Note 6015A, Electrical wiring repair, Wiring: Precautions for repair**) repair the wiring, otherwise replace it.

AFTER REPAIR	Deal with any other faults. Clear the fault memory. Switch off the ignition until the end of the power-latch phase, and carry out a road test followed by a check with the **diagnostic tool**.

GETtheMANUALS.org

DF019 CONTINUED 3	

1.DEF	*NOTES*	**Special note:** This fault appears when the computer control section overheats or when command **AC039 High-speed fan assembly relay** is run.

Check the connections of the high-speed fan assembly relay mounting.
Check the engine management computer connections.
If there is a repair procedure (see **Technical Note 6015A, Repairing electrical wiring, Wiring: Precautions for repair**) repair the wiring, otherwise replace it.

Measure **the resistance** of the "high-speed fan assembly" relay coil.
Replace the relay if the resistance is **greater than 200 Ω or less than 20 Ω**.

Remove the high speed relay and check the **insulation** and **continuity** of the following connection:
– Connection code **3JP** between components **120 and 335**.

Check for **the presence** of **+ 12 V after relay** on the high-speed fan assembly relay.
– Connection code **3FB** of component **335**.
If the connection or connections are faulty and there is a repair procedure (see **Technical Note 6015A, Electrical wiring repair, Wiring: Precautions for repair**) repair the wiring, otherwise replace it.

If the fault is still present, contact the Techline.

AFTER REPAIR	Deal with any other faults. Clear the fault memory. Switch off the ignition until the end of the power-latch phase, and carry out a road test followed by a check with the **diagnostic tool**.

GETtheMANUALS.org

DF025 PRESENT OR STORED	PRE-POSTHEATING UNIT DIAGNOSTIC LINE 1.DEF: Faulty heater plug(s) or open circuit on the preheating unit return line to the computer in open circuit.

NOTES	**Priorities when dealing with a number of faults:** Deal with fault **DF017 Preheating control circuit** first, if it is present or stored.
	Conditions for applying the fault finding procedure to stored faults: The fault is declared present after: – when the ignition is switched on, during the preheating phase, – engine running, during the postheating phase, – controlling the heater plugs using command **AC037 Preheating relay**.
	Special notes: If the fault is present: Use bornier **Elé. 1681** for all operations on the connectors of the engine management computer. Consult the wiring diagram Technical Note, **Espace IV ph2, Laguna II ph2, Vel Satis ph2** to locate the fuses and relays concerned.
	IMPORTANT Please observe the cleanliness guidelines and safety advice.

AFTER REPAIR	Deal with any other faults. Clear the fault memory. Switch off the ignition until the end of the power-latch phase, and carry out a road test followed by a check with the **diagnostic tool**.

EDC16C36_V08_DF025/EDC16C36_V04_DF025

GETtheMANUALS.org

DF025 CONTINUED	

Check the preheating unit connections.
Check the connections on all the heater plugs.
If there is a repair method (see **Technical Note 6015A, Repairing electrical wiring, Wiring: Precautions for repair**), repair the wiring, otherwise replace it.

Measure the **resistance** of the preheater plugs: Replace any spark plug with a resistance **greater than 2** Ω.
– Check the **continuity** of the following connections:
– Connection code **37Z** between components **257 and 680**.
– Connection code **37AA** between components **257 and 681**.
– Connection code **37AB** between components **257 and 682**.
– Connection code **37AC** between components **257 and 683**.

Check for the presence of **+ 12 V** battery feed on the **preheating unit** connector supplied by fuse **FM12 70A** located on component **597**.
– Connection code **BP35** of component **257**.

– Check the engine earthing.
– interpret command **AC037 Preheating relay**.

Check the engine management computer connections.
Check the **continuity, insulation and absence of interference resistance** on the following connections:
– Connection code **3FY**,
– Connection code **3FF**,
between components **120 and 257**.
If the connection or connections are faulty and there is a repair procedure (see **Technical Note 6015A, Electrical wiring repair, Wiring: Precautions for repair**) repair the wiring, otherwise replace it.

If the fault is still present, replace the pre-postheating unit.

AFTER REPAIR	Deal with any other faults. Clear the fault memory. Switch off the ignition until the end of the power-latch phase, and carry out a road test followed by a check with the **diagnostic tool**.

GETtheMANUALS.org

DF026 PRESENT OR STORED	CYLINDER 1 INJECTOR CONTROL CIRCUIT CO: Open circuit CC: Short circuit 1.DEF: Internal electronic fault

NOTES	**Conditions for applying the fault finding procedure to stored faults:** The fault is declared present after: – the ignition is switched on, – starting the engine, – a road test.
	Special notes: If the fault is present: – the **level 2** warning light comes on for **CC and 1.DEF**, – the **level 1** warning light comes on for **CO**, – the **European On Board Diagnostic** warning light is lit. Use bornier **Elé. 1681** for all operations on the engine management computer. **After** replacing an injector, run commands **SC002 Enter injector codes** and **SC036 Reinitialise programming** and follow the described procedures.
	IMPORTANT **Cylinder No. 1 is located at the engine flywheel end.** Please observe the cleanliness guidelines and safety advice. This fault can result in a rapid and significant fouling of the particle filter.
	WARNING **This fault may appear if the wiring harness has been damaged.** **Follow the procedure described in the Wiring Check in the Introduction.** This test enables the condition and the conformity of the engine wiring harness to be checked.
	Use the **Espace IV ph2, Laguna II ph2, Vel Satis ph2** wiring diagram Technical Note.

Check the connectors of injector No. 1.
Check the engine management computer connections.
If there is a repair method (see **Technical Note 6015A, Repairing electrical wiring, Wiring: Precautions for repair**), repair the wiring, otherwise replace it.

AFTER REPAIR	Deal with any other faults. Clear the fault memory. Switch off the ignition until the end of the power-latch phase, and carry out a road test followed by a check with the **diagnostic tool**.

EDC16C36_V08_DF026/EDC16C36_V04_DF026

GETtheMANUALS.org

DF026 CONTINUED	

Disconnect injector No. 1.
Measure the **resistance of injector No. 1**.
Replace the injector if it has a **short circuit (R = 0 Ω)** or **open circuit (infinite resistance measurement)**.
Otherwise, **reconnect injector No. 1**.

Check for **continuity and the absence of interference resistance** of the following connections:
– Connection code **3KW**,
– Connection code **3CR**,
between components **120 and 193**.
If the connection or connections are faulty and there is a repair procedure (see **Technical Note 6015A, Electrical wiring repair, Wiring: Precautions for repair**) repair the wiring, otherwise replace it.
If the fault is still present, run **Test 7 Poor injector operation**.

If the fault is still present, contact the Techline.

AFTER REPAIR	Deal with any other faults. Clear the fault memory. Switch off the ignition until the end of the power-latch phase, and carry out a road test followed by a check with the **diagnostic tool**.

GETtheMANUALS.org

DF027 PRESENT OR STORED	INJECTOR CYLINDER 2 CONTROL CIRCUIT CO: Open circuit CC: Short circuit 1.DEF: Internal electronic fault

NOTES	**Conditions for applying the fault finding procedure to stored faults:** The fault is declared present after: – the ignition is switched on, – starting the engine, – a road test.
	Special notes: If the fault is present: – the **level 2** warning light comes on for **CC and 1.DEF**, – the **level 1** warning light comes on for **CO**, – the **European On Board Diagnostic** warning light is lit. Use bornier **Elé. 1681** for all operations on the engine management computer. **After** replacing an injector, run command **SC002 Enter injector codes** and **SC036 Reinitialise programming**. Follow the procedures as described.
	IMPORTANT **Cylinder No. 1 is located at the engine flywheel end.** Please observe the cleanliness guidelines and safety advice. This fault can result in a rapid and significant fouling of the particle filter.
	WARNING **This fault may appear if the wiring harness has been damaged.** **Follow the procedure described in the Wiring Check in the Introduction.** This test enables the condition and the conformity of the engine wiring harness to be checked.
	Use the **Espace IV ph2, Laguna II ph2, Vel Satis ph2** wiring diagram Technical Note.

Check the connectors of injector No. 2.
Check the engine management computer connections.
If there is a repair method (see **Technical Note 6015A, Repairing electrical wiring, Wiring: Precautions for repair**), repair the wiring, otherwise replace it.

AFTER REPAIR	Deal with any other faults. Clear the fault memory. Switch off the ignition until the end of the power-latch phase, and carry out a road test followed by a check with the **diagnostic tool**.

EDC16C36_V08_DF027/EDC16C36_V04_DF027

GETtheMANUALS.org

DF027 CONTINUED	

Disconnect injector No. 2.
Measure the **resistance of injector No. 2**.
Replace the injector if it has a **short circuit (R = 0 Ω)** or **open circuit (infinite resistance measurement)**.
Otherwise **reconnect injector No. 2**.

Check for **continuity and the absence of interference resistance** of the following connections:
– Connection code **3KX**,
– Connection code **3CS**,
between components **120 and 194**.
If the connection or connections are faulty and there is a repair procedure (see **Technical Note 6015A, Electrical wiring repair, Wiring: Precautions for repair**) repair the wiring, otherwise replace it.
If the fault is still present, run **Test 7 Poor injector operation**.

If the fault is still present, contact the Techline.

AFTER REPAIR	Deal with any other faults. Clear the fault memory. Switch off the ignition until the end of the power-latch phase, and carry out a road test followed by a check with the **diagnostic tool**.

GETtheMANUALS.org

DF028 PRESENT OR STORED	CYLINDER 3 INJECTOR CONTROL CIRCUIT CO: Open circuit CC: Short circuit 1.DEF: Internal electronic fault

NOTES	**Conditions for applying the fault finding procedure to stored faults:** The fault is declared present after: – the ignition is switched on, – starting the engine, – a road test.
	Special notes: If the fault is present: – the **level 2** warning light comes on for **CC and 1.DEF**, – the **level 1** warning light comes on for **CO**, – the **European On Board Diagnostic** warning light is lit. Use bornier **Elé. 1681** for all operations on the engine management computer. **After** replacing an injector, run commands **SC002 Enter injector codes** and **SC036 Reinitialise programming**. Follow the procedures as described.
	IMPORTANT **Cylinder No. 1 is located at the engine flywheel end.** Please observe the cleanliness guidelines and safety advice. This fault can result in a rapid and significant fouling of the particle filter.
	WARNING **This fault may appear if the wiring harness has been damaged.** **Follow the procedure described in the Wiring Check in the Introduction.** This test enables the condition and the conformity of the engine wiring harness to be checked.
	Use the **Espace IV ph2, Laguna II ph2, Vel Satis ph2** wiring diagram Technical Note.

Check the connectors of injector No. 3.
Check the engine management computer connections.
If there is a repair method (see **Technical Note 6015A, Repairing electrical wiring, Wiring: Precautions for repair**), repair the wiring, otherwise replace it.

AFTER REPAIR	Deal with any other faults. Clear the fault memory. Switch off the ignition until the end of the power-latch phase, and carry out a road test followed by a check with the **diagnostic tool**.

EDC16C36_V08_DF028/EDC16C36_V04_DF028

GETtheMANUALS.org

DF028 CONTINUED	

Disconnect injector no. **3**.
Measure the **resistance of injector no**. **3**.
Replace the injector if it has a **short circuit (R = 0 Ω)** or **open circuit (infinite resistance measurement)**.
Otherwise, **reconnect injector no. 3**.

Check for **continuity and the absence of interference resistance** of the following connections:
– Connection code **3KY**,
– Connection code **3CT**,
between components **120 and 195**.
If the connection or connections are faulty and there is a repair procedure (see **Technical Note 6015A, Electrical wiring repair, Wiring: Precautions for repair**), repair the wiring, otherwise replace it.
If the fault is still present: run **Test 7 Poor injector operation**.

If the fault is still present, contact the Techline.

AFTER REPAIR	Deal with any other faults. Clear the fault memory. Switch off the ignition until the end of the power-latch phase, and carry out a road test followed by a check with the **diagnostic tool**.

GETtheMANUALS.org

DF029 PRESENT OR STORED	CYLINDER 4 INJECTOR CONTROL CIRCUIT CO: Open circuit CC: Short circuit 1.DEF: Internal electronic fault

NOTES	**Conditions for applying the fault finding procedure to a stored fault:** The fault is declared present after: – the ignition is switched on. – starting the engine, – a road test.
	Special notes: If the fault is present: – the **European On Board Diagnostic** warning light is lit, – the **level 2** warning light comes on for **CC and 1.DEF**, – the **level 1** warning light comes on for **CO**. Use bornier Elé. 1681 for all operations on the engine management computer connectors. **After** replacing an injector, run commands **SC002 Enter injector codes** and **SC036 Reinitialise programming**. Follow the procedures as described.
	IMPORTANT **Cylinder no. 1 is located on the engine flywheel end.** Please observe the cleanliness guidelines and safety advice. This fault can result in a rapid and significant fouling of the particle filter.
	WARNING **This fault may appear if the wiring harness has been damaged.** **Follow the procedure described in the Wiring Check in the Introduction.** This test enables the condition and the conformity of the engine wiring harness to be checked.
	Use the **Vel Satis ph2, Espace IV ph2, Laguna II ph2** wiring diagram Technical Note.

Check the connector of injector no. 4.
check the engine management computer connections.
If there is a repair method (see **Technical Note 6015A, Repairing electrical wiring, Wiring: Precautions for repair**), repair the wiring, otherwise replace it.

AFTER REPAIR	Deal with any other faults. Clear the fault memory. Switch off the ignition until the end of the power-latch phase, and carry out a road test followed by a check with the **diagnostic tool**.

EDC16C36_V08_DF029/EDC16C36_V04_DF029

GETtheMANUALS.org

DF029 CONTINUED	

Disconnect injector no. 4.
Measure the **resistance of injector no. 4**.
Replace the injector if it has a **short circuit (R = 0 Ω)** or **open circuit (infinite resistance measurement)**.
Otherwise, **reconnect injector no. 4**.

Check for **continuity and the absence of interference resistance** of the following connections:
– Connection code **3KZ**,
– Connection code **3CU**,
between components **120 and 196**.
If the connection or connections are faulty and there is a repair procedure (see **Technical Note 6015A, Electrical wiring repair, Wiring: Precautions for repair**), repair the wiring, otherwise replace it.

If the fault is still present, run **Test 7 Poor injector operation**.

If the fault is still present, contact the Techline

AFTER REPAIR	Deal with any other faults. Clear the fault memory. Switch off the ignition until the end of the power-latch phase, and carry out a road test followed by a check with the **diagnostic tool**.

GETtheMANUALS.org

DF032 PRESENT OR STORED	THERMOPLUNGER 1 RELAY CONTROL CIRCUIT CO: Open circuit CC.1: Short circuit to + 12 V CC.0: Short circuit to earth 1.DEF: Internal electronic fault

NOTES	**Conditions for applying the fault finding procedure to a stored fault:** The fault is declared present after: – the ignition is switched on, – with the engine running, – actuator command **AC063 Thermoplunger no. 1 relay**.
	Special notes: Use bornier **Elé. 1681** for all operations on the engine management computer connectors. Consult the Wiring diagram Technical Note **Laguna II ph2, Vel Satis ph2** to locate the fuses and relays concerned.

CO	***NOTES***	None.

Check the conformity of fuse **FM14 (70A)** on component **597,** and replace it if necessary.
Check the connections of the **thermoplunger 1** relay mounting on the engine fuse box.
check the engine management computer connections.
If there is a repair method (see **Technical Note 6015A, Repairing electrical wiring, Wiring: Precautions for repair**), repair the wiring, otherwise replace it.

AFTER REPAIR	Deal with any other faults. Clear the fault memory. Switch off the ignition until the end of the power-latch phase, and carry out a road test followed by a check with the **diagnostic tool**.

EDC16C36_V08_DF032/EDC16C36_V04_DF032

GETtheMANUALS.org

DF032 CONTINUED 1	

Check the conformity of the **thermoplunger 1** relay (relay removed):
Insulation between the following connections:
– Connection code **3JB**,
– Connection code **BP9**,
of component **1067.**

Measure **the resistance** of the **thermoplunger no. 1** relay coil.
– Connection code **3FB**,
– Connection code **3JA**,
of component **1067.**
Replace the relay if its resistance is **greater than 1 kΩ or less than 6** Ω.

Check the **continuity** of the following connection:
– Connection code **3JA** between components **120 and 1067**.

Check for the **presence** of **+ 12 V after relay** on the **thermoplunger 1** relay mounting.
– Connection code **3FB** of component **1067**.
If the connection or connections are faulty and there is a repair procedure (see **Technical Note 6015A, Electrical wiring repair, Wiring: Precautions for repair**), repair the wiring, otherwise replace it.

If the fault is still present, contact the Techline.

AFTER REPAIR	Deal with any other faults. Clear the fault memory. Switch off the ignition until the end of the power-latch phase, and carry out a road test followed by a check with the **diagnostic tool**.

GETtheMANUALS.org

DF032 CONTINUED 2	

CC.1	***NOTES***	None.

Check the conformity of fuse **FM14 (70A)** on component **597**, and replace it if necessary. Check the connections of the **thermoplunger 1** relay mounting on the engine fuse box. check the engine management computer connections. If there is a repair method (see **Technical Note 6015A, Repairing electrical wiring, Wiring: Precautions for repair**), repair the wiring, otherwise replace it.
Check the conformity of the **thermoplunger 1** relay (relay removed): **Insulation** between the following connections: – Connection code **3JB**, – Connection code **BP9**, of component **1067.** Measure **the resistance** of the **thermoplunger no. 1** relay coil. – Connection code **3FB**, – Connection code **3JA**, of component **1067.** Replace the relay if its resistance is **greater than 1 kΩ or less than 6 Ω**.
Check the insulation in relation to **+12 V** of the following connection: – Connection code **3JA** between components **120 and 1067**. If the connection or connections are faulty and there is a repair procedure (see **Technical Note 6015A, Electrical wiring repair, Wiring: Precautions for repair**), repair the wiring, otherwise replace it.
If the fault is still present, contact the Techline.

AFTER REPAIR	Deal with any other faults. Clear the fault memory. Switch off the ignition until the end of the power-latch phase, and carry out a road test followed by a check with the **diagnostic tool**.

GETtheMANUALS.org

DF032 CONTINUED 3	

CC.0	***NOTES***	None.

Check the conformity of fuse **FM14 (70A)** on component **597**, and replace it if necessary.
Check the connections of the **thermoplunger 1** relay mounting on the engine fuse box.
check the engine management computer connections.
If there is a repair method (see **Technical Note 6015A, Repairing electrical wiring, Wiring: Precautions for repair**), repair the wiring, otherwise replace it.

Check the conformity of the **thermoplunger 1** relay (relay removed):
Insulation between the following connections:
– Connection code **3JB**,
– Connection code **BP9**,
of component **1067.**
Measure **the resistance** of the **thermoplunger no. 1** relay coil.
– Connection code **3FB**,
– Connection code **3JA**,
of component **1067.**
Replace the relay if its resistance is **greater than 1 kΩ or less than 6 Ω**.

Check the insulation from earth of the following connection:
– Connection code **3JA** between components **120 and 1067**.

Check the **+ 12 V after relay feed** of the **thermoplunger 1** relay mounting on the following connection:
– Connection code **3FB** between components **120 and 1067**.
If the connection or connections are faulty and there is a repair procedure (see **Technical Note 6015A, Electrical wiring repair, Wiring: Precautions for repair**), repair the wiring, otherwise replace it.

If the fault is still present, contact the Techline.

AFTER REPAIR	Deal with any other faults. Clear the fault memory. Switch off the ignition until the end of the power-latch phase, and carry out a road test followed by a check with the **diagnostic tool**.

GETtheMANUALS.org

DF032 CONTINUED 4	

1.DEF	*NOTES*	**Special note:** This fault appears when the computer control section has overheated.

Check the conformity of fuse **FM14 (70A)** on component **597**, and replace it if necessary.
Check the connections of the **thermoplunger 1** relay mounting on the engine fuse box.
check the engine management computer connections.
If there is a repair method (see **Technical Note 6015A, Repairing electrical wiring, Wiring: Precautions for repair**), repair the wiring, otherwise replace it.

Check the conformity of the **thermoplunger 1** relay (relay removed):
Insulation between the following connections:
– Connection code **3JB**,
– Connection code **BP9**,
of component **1067.**

Measure **the resistance** of the **thermoplunger no. 1** relay coil.
– Connection code **3FB**,
– Connection code **3JA**,
of component **1067.**

Replace the relay if its resistance is **greater than 1 kΩ or less than 6** Ω.

Check **the absence of interference resistance** on the following connection:
– Connection code **3FB** between components **120 and 1067**.

Also check **the insulation between** the following connections:
– Connection code **3JB** between components **898 and 1067**.
– Connection code **BP9** between components **597 and 1067**.
If the connection or connections are faulty and there is a repair procedure (see **Technical Note 6015A, Electrical wiring repair, Wiring: Precautions for repair**), repair the wiring, otherwise replace it.

If the fault is still present, contact the Techline.

AFTER REPAIR	Deal with any other faults. Clear the fault memory. Switch off the ignition until the end of the power-latch phase, and carry out a road test followed by a check with the **diagnostic tool**.

GETtheMANUALS.org

DF033 PRESENT OR STORED	THERMOPLUNGER 2 RELAY CONTROL CIRCUIT CO: Open circuit CC.1: Short circuit to + 12 V CC.0: Short circuit to earth 1.DEF: Internal electronic fault

NOTES	**Conditions for applying the fault finding procedure to a stored fault:** The fault is declared present after: – the ignition is switched on, – with the engine running, – actuator command **AC064 Thermoplunger no. 2 relay**.
	Special notes: Use bornier **Elé. 1681** for all operations on the engine management computer connectors. Consult the Wiring diagram Technical Note **Laguna II ph2, Vel Satis ph2** to locate the fuses and relays concerned.

AFTER REPAIR	Deal with any other faults. Clear the fault memory. Switch off the ignition until the end of the power-latch phase, and carry out a road test followed by a check with the **diagnostic tool**.

EDC16C36_V08_DF033/EDC16C36_V04_DF033

GETtheMANUALS.org

DF033 CONTINUED 1	

CO	***NOTES***	None.

Check the conformity of fuse **FM13 (70A)** on component **597**, and replace it if necessary.
Check the connections of the **thermoplunger 2** relay mounting on the engine fuse box.
check the engine management computer connections.
If there is a repair method (see **Technical Note 6015A, Repairing electrical wiring, Wiring: Precautions for repair**), repair the wiring, otherwise replace it.

Check the conformity of the **thermoplunger 2** relay (relay removed):
Insulation between the following connections:
– Connection code **BP91**,
– Connection code **3JAD**,
of component **1068.**

Measure **the resistance** of the **thermoplunger 2** relay coil.
– Connection code **3FB**,
– Connection code **3JAA**,
of component **1068.**
Replace the relay if its resistance is **greater than 1 kΩ or less than 6** Ω.

Check the **continuity** of the following connection:
– Connection code **3JAA** between components **120 and 1068**.

Check for the **presence** of **+ 12 V after relay** on the **thermoplunger 2** relay mounting.
– Connection code **3FB** of component **1068**.
If the connection or connections are faulty and there is a repair procedure (see **Technical Note 6015A, Electrical wiring repair, Wiring: Precautions for repair**), repair the wiring, otherwise replace it.

If the fault is still present, contact the Techline.

AFTER REPAIR	Deal with any other faults. Clear the fault memory. Switch off the ignition until the end of the power-latch phase, and carry out a road test followed by a check with the **diagnostic tool**.

GETtheMANUALS.org

DF033 CONTINUED 2	

CC.1	*NOTES*	None.

Check the conformity of fuse **FM13 (70A)** on component **597**, and replace it if necessary.
Check the connections of the **thermoplunger 2** relay mounting on the engine fuse box.
check the engine management computer connections.
If there is a repair procedure (see **Technical Note 6015A, Repairing electrical wiring, Wiring: Precautions for repair**) repair the wiring, otherwise replace it.

Check the conformity of the **thermoplunger 2** relay (relay removed):
Insulation between the following connections:
– Connection code **BP91**,
– Connection code **3JAD**,
of component **1068.**

Measure **the resistance** of the **thermoplunger 2** relay coil.
– Connection code **3FB**,
– Connection code **3JAA**,
of component **1068.**
Replace the relay if its resistance is **greater than 1 kΩ or less than 6** Ω.

Check **the insulation** in relation to **+12 V** of the following connection:
– Connection code **3JAA** between components **120 and 1068**.
If the connection or connections are faulty and there is a repair procedure (see **Technical Note 6015A, Electrical wiring repair, Wiring: Precautions for repair**), repair the wiring, otherwise replace it.

If the fault is still present, contact the Techline.

AFTER REPAIR	Deal with any other faults. Clear the fault memory. Switch off the ignition until the end of the power-latch phase, and carry out a road test followed by a check with the **diagnostic tool**.

GETtheMANUALS.org

DF033 CONTINUED 3	

CC.0	*NOTES*	None.

Check the conformity of fuse **FM13 (70A)** on component **597**, and replace it if necessary.
Check the connections of the **thermoplunger 2** relay mounting on the engine fuse box.
check the engine management computer connections.
If there is a repair method (see **Technical Note 6015A, Repairing electrical wiring, Wiring: Precautions for repair**), repair the wiring, otherwise replace it.

Check the conformity of the **thermoplunger 2** relay (relay removed):
Insulation between the following connections:
– Connection code **BP91**,
– Connection code **3JAD**,
of component **1068.**

Measure **the resistance** of the **thermoplunger 2** relay coil.
– Connection code **3FB**,
– Connection code **3JAA**,
of component **1068.**

Replace the relay if its resistance is **greater than 1 kΩ or less than 6 Ω**.

Check the insulation from earth of the following connection:
– Connection code **3JAA** between components **120 and 1068**.

Check the **continuity** and **insulation** to **earth** of the following connection:
– Connection code **3FB** between components **120 and 1068**.
If the connection or connections are faulty and there is a repair procedure (see **Technical Note 6015A, Electrical wiring repair, Wiring: Precautions for repair**), repair the wiring, otherwise replace it.

If the fault is still present, contact the Techline.

AFTER REPAIR	Deal with any other faults. Clear the fault memory. Switch off the ignition until the end of the power-latch phase, and carry out a road test followed by a check with the **diagnostic tool**.

GETtheMANUALS.org

DF033 CONTINUED 4	

1.DEF	*NOTES*	**Special note:** This fault appears when the computer control section has overheated.

Check the conformity of fuse **FM13 (70A)** on component **597**, and replace it if necessary.
Check the connections of the **thermoplunger 2** relay mounting on the engine fuse box.
check the engine management computer connections.
If there is a repair method (see **Technical Note 6015A, Repairing electrical wiring, Wiring: Precautions for repair**), repair the wiring, otherwise replace it.

Check the conformity of the **thermoplunger 2** relay (relay removed):
Insulation between the following connections:
– Connection code **BP91**,
– Connection code **3JAD**,
of component **1068.**

Measure **the resistance** of the **thermoplunger 2** relay coil.
– Connection code **3FB**,
– Connection code **3JAA**,
of component **1068.**
Replace the relay if its resistance is **greater than 1 kΩ or less than 6 Ω**.

Check **the absence of interference resistance** of the following connection:
– Connection code **3FB** between components **120 and 1068**.

Also check **the insulation** between the following connections:
– Connection code **3JAA**between components **120 and 1068**.
– Connection code **BP91**between components **597 and 1068**.
If the connection or connections are faulty and there is a repair procedure (see **Technical Note 6015A, Electrical wiring repair, Wiring: Precautions for repair**), repair the wiring, otherwise replace it.

If the fault is still present, contact the Techline.

AFTER REPAIR	Deal with any other faults. Clear the fault memory. Switch off the ignition until the end of the power-latch phase, and carry out a road test followed by a check with the **diagnostic tool**.

GETtheMANUALS.org

DF034 PRESENT OR STORED	THERMOPLUNGER 3 RELAY CONTROL CIRCUIT CO: Open circuit CC.1: Short circuit to + 12 V CC.0: Short circuit to earth 1.DEF: Internal electronic fault

NOTES	**Conditions for applying the fault finding procedure to a stored fault:** The fault is declared present after: – the ignition is switched on, – with the engine running, – actuator command **AC031 Thermoplunger no. 3 relay**.
	Special notes: Use bornier **Elé. 1681** for all operations on the engine management computer connectors. Consult Technical Note Wiring Diagram **Laguna II ph2**, **Vel Satis ph2** to locate the fuses and relays concerned.

AFTER REPAIR	Deal with any other faults. Clear the fault memory. Switch off the ignition until the end of the power-latch phase, and carry out a road test followed by a check with the **diagnostic tool**.

EDC16C36_V08_DF034/EDC16C36_V04_DF034

GETtheMANUALS.org

DF034 CONTINUED 1	

CO	*NOTES*	None.

Check the conformity of fuse **FM14 (70A)** on component **597**, and replace it if necessary.
Check the connections of the **thermoplunger 3** relay mounting on the engine fuse box.
check the engine management computer connections.
If there is a repair procedure (see **Technical Note 6015A, Repairing electrical wiring, Wiring: Precautions for repair**) repair the wiring, otherwise replace it.

Check the conformity of the **thermoplunger 3** relay (relay removed):
Insulation between the following connections:
– Connection code **BP9**,
– Connection code **3JAC**,
of component **1069.**

Measure **the resistance** of the **thermoplunger 3** relay coil.
– Connection code **3JAB**,
– Connection code **3FB**,
of component **1069.**
Replace the relay if its resistance is **greater than 1 kΩ or less than 6** Ω.

Check the **continuity** of the following connection:
– Connection code **3JAB** between components **120 and 1069**.

Check for the **presence** of **+ 12 V after relay** on the **thermoplunger 3** relay mounting.
– Connection code **3FB** of component **1069**.
If the connection or connections are faulty and there is a repair procedure (see **Technical Note 6015A, Electrical wiring repair, Wiring: Precautions for repair**), repair the wiring, otherwise replace it.

If the fault is still present, contact the Techline.

AFTER REPAIR	Deal with any other faults. Clear the fault memory. Switch off the ignition until the end of the power-latch phase, and carry out a road test followed by a check with the **diagnostic tool**.

GETtheMANUALS.org

DF034 CONTINUED 2	

CC.1	***NOTES***	None.

Check the conformity of fuse **FM14 (70A)** on component **597**, and replace it if necessary.
Check the connections of the **thermoplunger 3** relay mounting on the engine fuse box.
check the engine management computer connections.
If there is a repair method (see **Technical Note 6015A, Repairing electrical wiring, Wiring: Precautions for repair**), repair the wiring, otherwise replace it.

Check the conformity of the **thermoplunger 3** relay (relay removed):
Insulation between the following connections:
– Connection code **BP9**,
– Connection code **3JAC**,
of component **1069.**

Measure **the resistance** of the **thermoplunger 3** relay coil.
– Connection code **3JAB**,
– Connection code **3FB**,
of component **1069.**
Replace the relay if its resistance is **greater than 1 kΩ or less than 6** Ω.

Check **the insulation** in relation to **+12 V** of the following connection:
– Connection code **3JAB** between components **120 and 1069**.
If the connection or connections are faulty and there is a repair procedure (see **Technical Note 6015A, Electrical wiring repair, Wiring: Precautions for repair**), repair the wiring, otherwise replace it.

If the fault is still present, contact the Techline.

AFTER REPAIR	Deal with any other faults. Clear the fault memory. Switch off the ignition until the end of the power-latch phase, and carry out a road test followed by a check with the **diagnostic tool**.

GETtheMANUALS.org

DF034 CONTINUED 3	

CC.0	***NOTES***	None.

Check the conformity of fuse **FM14 (70A)** on component **597**, and replace it if necessary.
Check the connections of the **thermoplunger 3** relay mounting on the engine fuse box.
check the engine management computer connections.
If there is a repair method (see **Technical Note 6015A, Repairing electrical wiring, Wiring: Precautions for repair**), repair the wiring, otherwise replace it.

Check the conformity of the **thermoplunger 3** relay (relay removed):
Insulation between the following connections:
– Connection code **BP9**,
– Connection code **3JAC**,
of component **1069.**

Measure **the resistance** of the **thermoplunger 3** relay coil.
– Connection code **3JAB**,
– Connection code **3FB**,
of component **1069.**
Replace the relay if its resistance is **greater than 1 kΩ or less than 6 Ω**.

Check the **continuity** and **insulation** to **earth** of the following connection:
– Connection code **3JAB** between components **120 and 1069**.

Check for the **presence** of **+ 12 V after relay** on the **thermoplunger 3** relay mounting.
– Connection code **3FB** of component **1069**.
If the connection or connections are faulty and there is a repair procedure (see **Technical Note 6015A, Electrical wiring repair, Wiring: Precautions for repair**), repair the wiring, otherwise replace it.

If the fault is still present, contact the Techline.

AFTER REPAIR	Deal with any other faults. Clear the fault memory. Switch off the ignition until the end of the power-latch phase, and carry out a road test followed by a check with the **diagnostic tool**.

GETtheMANUALS.org

DF034 CONTINUED 4	

1.DEF	*NOTES*	**Special note:** This fault appears when the computer control section has overheated.

Check the conformity of fuse **FM14 (70A)** on component **597**, and replace it if necessary.
Check the connections of the **thermoplunger 3** relay mounting on the engine fuse box.
check the engine management computer connections.
If there is a repair method (see **Technical Note 6015A, Repairing electrical wiring, Wiring: Precautions for repair**), repair the wiring, otherwise replace it.

Check the conformity of the **thermoplunger 3** relay (relay removed):
Insulation between the following connections:
– Connection code **BP9**,
– Connection code **3JAC**,
of component **1069.**

Measure **the resistance** of the **thermoplunger 3** relay coil.
– Connection code **3JAB**,
– Connection code **3FB**,
of component **1069.**
Replace the relay if its resistance is **greater than 1 kΩ or less than 6 Ω**.

Check **the absence of interference resistance** of the following connection:
– Connection code **3FB** between components **120 and 1069**.

Also check **the insulation between** the following connections:
– Connection code **3JAB** between components **120 and 1069**.
– Connection code **BP9** between components **597 and 1069**.
If the connection or connections are faulty and there is a repair procedure (see **Technical Note 6015A, Electrical wiring repair, Wiring: Precautions for repair**), repair the wiring, otherwise replace it.

If the fault is still present, contact the Techline.

AFTER REPAIR	Deal with any other faults. Clear the fault memory. Switch off the ignition until the end of the power-latch phase, and carry out a road test followed by a check with the **diagnostic tool**.

GETtheMANUALS.org

DF038 PRESENT OR STORED	COMPUTER 1.DEF: Internal electronic fault 2.DEF: Voltage too low 3.DEF: Data inconsistency

NOTES	**Conditions for applying the fault finding procedure to a stored fault:** The fault is declared present after: – starting the engine, – a road test.
	Special notes: If the fault is present: – depending on the situation, the **level 1 or level 2** warning light is lit for **1.DEF**, – the **level 1** warning light comes on for **3.DEF**, – the **level 2** warning light comes on for **2.DEF**, – engine torque limited, – the engine stops.

1.DEF	***NOTES***	None.

If the fault is **stored**, clear the fault from the computer memory. Switch off the ignition, wait for the **diagnostic tool** message (maximum time **8 minutes**): **Communication lost with computer: EDC16C36, check the tool connection and computer power supply**, and then switch the ignition back on. Start the engine and re-establish dialogue.
If the fault is still present, contact the Techline.

AFTER REPAIR	Deal with any other faults. Clear the fault memory. Switch off the ignition until the end of the power-latch phase, and carry out a road test followed by a check with the **diagnostic tool**.

EDC16C36_V08_DF038/EDC16C36_V04_DF038

GETtheMANUALS.org

DF038 CONTINUED	

2.DEF	*NOTES*	**Priorities when dealing with a number of faults:** Deal with faults **DF047 Computer feed voltage** or **DF046 Battery voltage** first, if they are present or stored.

If either of faults **DF047 Computer supply voltage** or **DF046 Battery voltage** is present or stored, clear the fault after dealing with **DF046 Battery voltage or DF047 Computer supply voltage**.

If the fault is still present, contact the Techline.

3.DEF	*NOTES*	None.

Contact the Techline.

AFTER REPAIR	Deal with any other faults. Clear the fault memory. Switch off the ignition until the end of the power-latch phase, and carry out a road test followed by a check with the **diagnostic tool**.

GETtheMANUALS.org

DF046 PRESENT OR STORED	BATTERY VOLTAGE 1.DEF: Above maximum threshold 2.DEF: Below minimum threshold 3.DEF: Initialisation not carried out

NOTES	**Conditions for applying the fault finding procedure to a stored fault:** The fault is declared present after: – starting the engine, – a road test.
	Special notes: Computer operating voltage: **6 V < operating voltage < 16.5 V**. It is then not possible to start the engine. Use bornier **Elé.1681** for any operations on the injection computer connectors.

1.DEF	***NOTES***	None.

Check the charging circuit, apply **Technical Note 6014A Checking the charging circuit**.
Carry out the necessary repairs.

AFTER REPAIR	Deal with any other faults. Clear the fault memory. Switch off the ignition until the end of the power-latch phase, and carry out a road test followed by a check with the **diagnostic tool**.

EDC16C36_V08_DF046/EDC16C36_V04_DF046

GETtheMANUALS.org

DF046 CONTINUED	

2.DEF	*NOTES*	Use the **Vel Satis ph2**, **Espace IV ph2**, **Laguna II ph2** wiring diagram Technical Note.

Reminder on computer operating voltage: **6 V < operating voltage < 16.5 V**.
– Using a voltmeter, take a reading of the battery voltage at its terminals.
– Compare the voltage obtained with the value displayed on the **diagnostic tool PR071 Computer supply voltage**.
If there is no difference (**less than 1 V):**
Recharge and test the battery and replace it if it is defective.
Next check the charge circuit.
If there is a difference (**greater than 1 V**):
Check the tightness and the condition of the battery terminals.

Check **the continuity and absence of interference resistance** on the following connections:
– Connection code **3FB**,
– Connection code **AP29**,
between components **597 and 120**.
– Connection code **Technical Note** between the NT earths **and component 120.**
(Check the four **NT** connections)

If the connection or connections are faulty and there is a repair procedure (see **Technical Note 6015A, Electrical wiring repair, Wiring: Precautions for repair**), repair the wiring, otherwise replace it.

3.DEF	*NOTES*	Only deal with this fault when it is present.

Switch off the ignition then switch it on again after **1 minute**; check to see if the fault is still present.
If the fault is still present, contact the Techline.

AFTER REPAIR	Deal with any other faults. Clear the fault memory. Switch off the ignition until the end of the power-latch phase, and carry out a road test followed by a check with the **diagnostic tool**.

GETtheMANUALS.org

DF047 PRESENT OR STORED	COMPUTER SUPPLY VOLTAGE 1.DEF: Voltage outside permitted range of values

NOTES	**Conditions for applying the fault finding procedure to a stored fault:** The fault is declared present after: – starting the engine, – a road test.
	Special notes: Use bornier **Elé.1681** for any operations on the injection computer connectors.
	Use the **Vel Satis ph2, Espace IV ph2, Laguna II ph2** wiring diagram Technical Note.

1.DEF	***NOTES***	Impossible to start.

Check for **the continuity and absence of interference resistance** on the following connection:
– Connection code **AP29** between components **597 and 120**.
If the connection is faulty and there is a repair procedure (see **Technical Note 6015A, Electrical wiring repair, Wiring: Precautions for repair**), repair the wiring, otherwise replace it.

Check the condition of the **injection ECU supply relay (R08) in the engine fuse and relay box** (no bad contacts or corrosion on the relay mounting clips).
If there is a repair procedure (see **Technical Note 6015A, Repairing electrical wiring, Wiring: Precautions for repair**) repair the wiring, otherwise replace it.
If the fault does not reappear, start the engine and wait for the **diagnostic tool** message (maximum time **8 minutes**): **Communication lost with computer: EDC16C36, check the tool connection and the computer power supply**.
Carry out a road test and check the system faults.
If there are no faults, fault finding is complete.

If the fault is still present, contact the Techline.

AFTER REPAIR	Deal with any other faults. Clear the fault memory. Switch off the ignition until the end of the power-latch phase, and carry out a road test followed by a check with the **diagnostic tool**.

EDC16C36_V08_DF047/EDC16C36_V04_DF047

GETtheMANUALS.org

DF051 PRESENT OR STORED	CRUISE CONTROL/SPEED LIMITER FUNCTION 1.DEF: Cruise control or speed limiter fault.

NOTES	**Conditions for applying the fault finding procedure to a stored fault:** The fault is declared present after: – a road test with activation of the cruise control/speed limiter function. – the engine is started.
	Special notes: If the fault is present, the cruise control/speed limiter is switched off. Use bornier **Elé.1681** for any operations on the injection computer connectors.

1.DEF	***NOTES***	**Order of priority for a combination of faults:** Deal with faults **DF196 Pedal sensor circuit gang 1 and DF198 Pedal sensor circuit gang 2** first, if they are stored in the memory.

WARNING
This fault may appear if the wiring harness has been damaged.
Follow the procedure described in the Wiring Check in the Introduction.
This check enables the condition and the conformity of the engine wiring harness to be checked.

If fault **DF051** is declared present, refer to the interpretation of status **ET703 Cruise control/speed limiter buttons**. Check that by pressing the buttons the statuses change and that, with the ignition switched on, all the values are correct.

If the fault is still present, contact the Techline.

AFTER REPAIR	Deal with any other faults. Clear the fault memory. Switch off the ignition until the end of the power-latch phase, and carry out a road test followed by a check with the **diagnostic tool**.

EDC16C36_V08_DF051/EDC16C36_V04_DF051

GETtheMANUALS.org

DF053 PRESENT OR STORED	RAIL PRESSURE REGULATION FUNCTION 1.DEF: Above max threshold 2.DEF: Negative loop deviation 3.DEF: Positive loop deviation 4.DEF: Below minimum threshold

NOTES	**Order of priority for a combination of faults:** Deal with fault **DF643 Rail pressure regulator circuit** first, if it is present or stored.
	Conditions for applying the fault finding procedure to a stored fault: The fault is declared present after: – the engine is started, – a road test.
	Special notes: If the fault is present: – It is not possible to start the engine. – the **level 1** warning light comes on for **2DEF/3.DEF**. – the **level 2** warning light comes on for **1DEF/3.DEF/4.DEF**. Use bornier **Elé.1681** for any operations on the injection computer connectors.

In the event of rail overpressure:
Check the conformity of the fuel by running **Test 9 Diesel fuel conformity check**.
Check the low pressure diesel circuit priming. Run **Test 2 Low pressure circuit check**.
Check the overpressure valve, run **Test 10 Incorrect operation of the overpressure valve**,

Check the operation of the injectors (see **Test 7 Poor injector operation**).
Display parameter **PR038 Rail pressure** and refer to the conformity check to check the conformity of the operating values.
If these checks do not indicate any abnormality, and if the fault persists, replace the injection pump.

AFTER REPAIR	Deal with any other faults. Clear the fault memory. Switch off the ignition until the end of the power-latch phase, and carry out a road test followed by a check with the **diagnostic tool**.

EDC16C36_V08_DF053/EDC16C36_V04_DF053

GETtheMANUALS.org

DF053 CONTINUED	

In the event of rail vacuum pressure:
Check that the rail pressure sensor is operating correctly using command **AC011 Rail pressure regulator**. Display parameter **PR038 Rail pressure** and refer to the conformity check to check the conformity of the operating values.
Check the conformity of the fuel by running **Test 9 Diesel fuel conformity check**.
Check the low pressure diesel circuit priming. Run **Test 2 Low pressure circuit check**.
Check the priming of the low-pressure diesel circuit.
Check the conformity of the diesel filter connections.
Check the condition of the filter (clogging and water saturation).
Check that there are no air bubbles between the filter and the high pressure pump.
Check the sealing of the low pressure and high pressure diesel fuel circuits (visual inspections, etc.) on pump casing, overpressure valve (run **Test 10 Incorrect operation of the overpressure valve)**, pipes, rail and injector unions, injector wells, etc.
Check the operation of the injectors (see **Test 7 Poor injector operation**).

Carry out the necessary operations.
If the fault is still present, replace the injection pump.

AFTER REPAIR	Deal with any other faults. Clear the fault memory. Switch off the ignition until the end of the power-latch phase, and carry out a road test followed by a check with the **diagnostic tool**.

GETtheMANUALS.org

DF054 PRESENT OR STORED	TURBOCHARGING SOLENOID VALVE CONTROL CIRCUIT CO: Open circuit CC.1: Short circuit to + 12 V CC.0: Short circuit to earth. 1.DEF: Internal electronic fault

NOTES	**Priorities when dealing with a number of faults:** Deal with fault **DF046 Battery voltage** first, if it is present or stored.
	Conditions for applying the fault finding procedure to a stored fault: The fault is declared present after: – the ignition is switched on. – starting the engine, – a road test, – actuator command **AC004 Turbocharging solenoid valve**.
	Special notes: If the fault is present: – turbocharging is no longer authorised, – the EGR function is inhibited, – the **level 1** and **European On Board Diagnostic** warning lights are lit. Use bornier Elé.1681 for any operations on the injection computer connectors.
	IMPORTANT This fault can result in a rapid and significant fouling of the particle filter.
	Use the **Espace IV ph2, Vel Satis ph2, Laguna II ph2** wiring Diagram Technical Note.

AFTER REPAIR	Deal with any other faults. Clear the fault memory. Switch off the ignition until the end of the power-latch phase, and carry out a road test followed by a check with the **diagnostic tool**.

GETtheMANUALS.org

DF054 CONTINUED 1	

CO	***NOTES***	None.

Check the turbocharging solenoid valve connections. Check the injection computer connections. If there is a repair method (see **Technical Note 6015A, Repairing electrical wiring, Wiring: Precautions for repair**), repair the wiring, otherwise replace it.
Measure the **resistance** of the turbocharging solenoid valve between the following connections: – Connection code **3FB**, – Connection code **3MG**, of component **1475.** If the resistance reading is not **15.4** Ω ± **- 0.7** Ω, replace the turbocharging solenoid valve.
Check the continuity of the following connections: – Connection code **3MG** between components **1475 and 120**. Check for the presence of **+ 12 V** after relay feed on the turbocharging solenoid valve connector: – Connection code **3FB** of component **1475**. If the connection or connections are faulty and there is a repair procedure (see **Technical Note 6015A, Electrical wiring repair, Wiring: Precautions for repair**), repair the wiring, otherwise replace it.
If the fault is still present, replace the turbocharging solenoid valve.

AFTER REPAIR	Deal with any other faults. Clear the fault memory. Switch off the ignition until the end of the power-latch phase, and carry out a road test followed by a check with the **diagnostic tool**.

GETtheMANUALS.org

DF054 CONTINUED 2	

CC.1	***NOTES***	None.

Check the turbocharging solenoid valve connections. Check the injection computer connections. If there is a repair method (see **Technical Note 6015A, Repairing electrical wiring, Wiring: Precautions for repair**), repair the wiring, otherwise replace it.
Measure the **resistance** of the turbocharging solenoid valve between **the following connections**: – Connection code **3FB**, – Connection code **3MG**, of component **1475.** If the resistance reading is not **15.4** Ω ± **0.7** Ω, replace the turbocharging solenoid valve.
Check **the continuity** and **insulation** in relation to **+ 12 V** of the following connection: – Connection code **3MG** between components **1475 and 120**. If the connection or connections are faulty and there is a repair procedure (see **Technical Note 6015A, Electrical wiring repair, Wiring: Precautions for repair**), repair the wiring, otherwise replace it.
If the fault is still present, replace the turbocharging solenoid valve.

AFTER REPAIR	Deal with any other faults. Clear the fault memory. Switch off the ignition until the end of the power-latch phase, and carry out a road test followed by a check with the **diagnostic tool**.

GETtheMANUALS.org

DF054 CONTINUED 3	

CC.0	***NOTES***	None.

Check the turbocharging solenoid valve connections. Check the injection computer connections. If there is a repair procedure (see **Technical Note 6015A, Repairing electrical wiring, Wiring: Precautions for repair**) repair the wiring, otherwise replace it.
Measure the **resistance** of the turbocharging solenoid valve between **the following connections**: – Connection code **3FB**, – Connection code **3MG**, of component **1475.** If the resistance reading is not **15.4** Ω ± **0.7** Ω, replace the turbocharging solenoid valve.
Check **the continuity** and **insulation** to **earth** of the following connections: – Connection code **3MG** between components **1475 and 120**. Check for **the presence** of **+ 12 V after relay** on the turbocharging solenoid valve connector. – Connection code **3FB** of component **1475**. If the connection or connections are faulty and there is a repair procedure (see **Technical Note 6015A, Electrical wiring repair, Wiring: Precautions for repair**), repair the wiring, otherwise replace it.
If the fault is still present, replace the turbocharging solenoid valve.

AFTER REPAIR	Deal with any other faults. Clear the fault memory. Switch off the ignition until the end of the power-latch phase, and carry out a road test followed by a check with the **diagnostic tool**.

GETtheMANUALS.org

DF054 CONTINUED 4	

1.DEF	*NOTES*	**Special note:** The fault appears when the computer control section is overheating.

Check the turbocharging solenoid valve connections. Check the injection computer connections. If there is a repair method (see **Technical Note 6015A, Repairing electrical wiring, Wiring: Precautions for repair**), repair the wiring, otherwise replace it.
Measure the **resistance** of the turbocharging solenoid valve between the following connections**:** – Connection code **3FB**, – Connection code **3MG**, of component **1475.** If the resistance reading is not **15.4** Ω ± **0.7** Ω, replace the turbocharging solenoid valve.
Check the **continuity** and **insulation** of the following connection: – Connection code **3MG** between components **1475 and 120**. Check for **the presence** of **+ 12 V after relay** on the turbocharging solenoid valve connector. – Connection code **3FB** of component **1475**. If the connection or connections are faulty and there is a repair procedure (see **Technical Note 6015A, Electrical wiring repair, Wiring: Precautions for repair**), repair the wiring, otherwise replace it.
If the fault is stored, clear the fault using command **AC004 Turbocharging solenoid valve**. If, when command **AC004 Turbocharging solenoid valve** is activated, **DF054 Turbocharging solenoid valve control circuit 1.DEF** is present or stored, contact the Techline.

AFTER REPAIR	Deal with any other faults. Clear the fault memory. Switch off the ignition until the end of the power-latch phase, and carry out a road test followed by a check with the **diagnostic tool**.

GETtheMANUALS.org

DF055 PRESENT OR STORED	TURBOCHARGING PRESSURE REGULATION CIRCUIT 1.DEF: Turbocharging pressure too high 2.DEF: Turbocharging pressure too low

NOTES	**Priorities when dealing with a number of faults:** Deal with faults **DF054 Turbocharging solenoid valve control circuit** and **DF004 Turbocharging pressure sensor circuit** first, if they are present or stored.
	Conditions for applying the fault finding procedure to a stored fault: The fault is declared present after: – the ignition is switched on. – starting the engine, – a road test.
	Special notes: If the fault is present: – engine torque limited, – turbocharging regulation is inhibited, – the EGR function is inhibited, – the **level 1** and **European On Board Diagnostic** warning lights are lit. Use bornier **Elé.1681** for any operations on the injection computer connectors.
	IMPORTANT This fault can result in a rapid and significant fouling of the particle filter.
	Use the **Espace IV ph2, Vel Satis ph2, Laguna II ph2** Wiring Diagram Technical Note.

1.DEF **2.DEF**	***NOTES***	None.

Check the turbocharger pressure sensor connections.
check the engine management computer connections.
If there is a repair method (see **Technical Note 6015A, Repairing electrical wiring, Wiring: Precautions for repair**), repair the wiring, otherwise replace it.

AFTER REPAIR	Deal with any other faults. Clear the fault memory. Switch off the ignition until the end of the power-latch phase, and carry out a road test followed by a check with the **diagnostic tool**.

GETtheMANUALS.org

DF055 CONTINUED	

Check for **continuity and the absence of interference resistance** of the following connections:
– Connection code **3LP**,
– Connection code **3LQ**,
– Connection code **3LN**,
between components **1071** and **120**.
If the connection or connections are faulty and there is a repair procedure (see **Technical Note 6015A, Electrical wiring repair, Wiring: Precautions for repair**), repair the wiring, otherwise replace it.
With the engine stopped and ignition on, view parameters **PR035 Atmospheric pressure** and **PR041 Turbocharging pressure**.
If the difference **is greater than 100 mbar**, make sure that the atmospheric pressure reading is consistent (by comparing with another vehicle for instance).
If atmospheric pressure is consistent, replace the turbocharging sensor.
If not, contact the Techline.

Run **Test 3 Turbocharged air inlet circuit check**:

If the fault is still present, refer to the interpretation of parameter **PR041 Turbocharging pressure**.

AFTER REPAIR	Deal with any other faults. Clear the fault memory. Switch off the ignition until the end of the power-latch phase, and carry out a road test followed by a check with the **diagnostic tool**.

GETtheMANUALS.org

DF056 PRESENT OR STORED	AIR FLOW SENSOR CIRCUIT CO.0: Open circuit or short circuit to earth CC.1: Short circuit + 12 volts 1.DEF: Value outside permitted tolerance values

NOTES	**Conditions for applying the fault finding procedure to a stored fault:** The fault is declared present after: – the ignition is switched on. – starting the engine, – a road test, – the ignition is switched off: **1.DEF**
	Special notes: If the fault is present: – the **European On Board Diagnostic** warning light is lit, – the **level 1** warning light is lit, – the EGR function and particle filter regeneration are inhibited, – safe value **PR132 Air flow 500 kg/h** at idle speed. Use bornier **Elé. 1681** for all operations on the engine management computer connectors.
	Use the **Espace IV ph2, Vel Satis ph2, Laguna II ph2** Wiring Diagram Technical Note.

CO.0	***NOTES***	**Priorities when dealing with a number of faults:** In the event of the simultaneous presence of fault **DF002 Air temperature sensor circuit**, check that the air flow sensor connector is connected correctly. Deal with fault **DF013 Sensor supply voltage no.3 (1.DEF)** first, if it is present or stored.

Check the air flowmeter connectors.
check the engine management computer connections.
If there is a repair method (see **Technical Note 6015A, Repairing electrical wiring, Wiring: Precautions for repair**), repair the wiring, otherwise replace it.

AFTER REPAIR	Deal with any other faults. Clear the fault memory. Switch off the ignition until the end of the power-latch phase, and carry out a road test followed by a check with the **diagnostic tool**.

GETtheMANUALS.org

DF056 CONTINUED 1	

Check **the continuity and insulation to** earth of the following connections:
– Connection code **3DW**,
– Connection code **3DV**,
– Connection code **3KJ**,
between components **799 and 120**.

Check for the presence of the **+ 5 V** feed on the air flowmeter connector.
– Connection code **3KJ** of component **799**.

Check for the **+ 12 V** feed on the air flowmeter connector.
– Connection code **3DV** of component **799**.

Run **Test 4 Air flowmeter**
If the connection or connections are faulty and there is a repair procedure (see **Technical Note 6015A, Electrical wiring repair, Wiring: Precautions for repair**), repair the wiring, otherwise replace it.

With the flowmeter **connected**, the vehicle **ignition on** and **engine stopped**:
Check the **voltage** between the following connections:
– Connection code **3DW**,
– Connection code **3DV**,
of component **799**.
Replace the air flowmeter if the voltage is not between **0.3 V** and **0.7 V**.

If the fault is still present, replace the air flowmeter.

AFTER REPAIR	Deal with any other faults. Clear the fault memory. Switch off the ignition until the end of the power-latch phase, and carry out a road test followed by a check with the **diagnostic tool**.

GETtheMANUALS.org

DF056 CONTINUED 2	

CC.1	*NOTES*	**Priorities when dealing with a number of faults:** Deal with fault **DF013 Sensor supply voltage no.3 (1.DEF)** first, if it is present or stored.

Check the air flowmeter connectors.
check the engine management computer connections.
If there is a repair procedure (see **Technical Note 6015A, Repairing electrical wiring, Wiring: Precautions for repair**) repair the wiring, otherwise replace it.

Check the **insulation** in relation to **+ 12 V** of the following connections:
– Connection code **3DW**,
– Connection code **3DV**,
– Connection code **3KJ**,
between components **799 and 120**.

Check for the presence of the **+ 5 V** feed on the air flowmeter connector.
– Connection code **3KJ** of component **799**.

Check for the **+ 12 V** feed on the air flowmeter connector.
– Connection code **3DV** of component **799**.

If the connection or connections are faulty and there is a repair procedure (see **Technical Note 6015A, Electrical wiring repair, Wiring: Precautions for repair**), repair the wiring, otherwise replace it.

With the flowmeter **connected**, the vehicle **ignition on** and **engine stopped**:
Check the **voltage** between the following connections:
– Connection code **3DW**,
– Connection code **3DV**,
of component **799.**
Replace the air flowmeter if the voltage is not between **0.3 V** and **0.7 V**.

If the fault is still present, replace the air flowmeter.

AFTER REPAIR	Deal with any other faults. Clear the fault memory. Switch off the ignition until the end of the power-latch phase, and carry out a road test followed by a check with the **diagnostic tool**.

GETtheMANUALS.org

DF056 CONTINUED 3	

1.DEF	*NOTES*	**Priorities when dealing with a number of faults:** Deal with fault **DF013 Sensor supply voltage no.3 (1.DEF)** first, if it is present or stored.

Check the air flowmeter connectors. check the engine management computer connections. If there is a repair method (see **Technical Note 6015A, Repairing electrical wiring, Wiring: Precautions for repair**), repair the wiring, otherwise replace it.
Check **for continuity** and **absence of interference resistance** of the following connections: – Connection code **3DW**, – Connection code **3DV**, – Connection code **3KJ**, between components **799 and 120**. If the connection or connections are faulty and there is a repair procedure (see **Technical Note 6015A, Electrical wiring repair, Wiring: Precautions for repair**), repair the wiring, otherwise replace it.
Check the condition of the flowmeter: no visible damage to the nearby flowmeter element.
If the fault is still present, replace the air flowmeter.

AFTER REPAIR	Deal with any other faults. Clear the fault memory. Switch off the ignition until the end of the power-latch phase, and carry out a road test followed by a check with the **diagnostic tool**.

GETtheMANUALS.org

DF059 PRESENT OR STORED	COMBUSTION MISFIRES ON CYLINDER 1

NOTES	**Conditions for applying the fault finding procedure to a stored fault:** The fault is declared present after: – **PR055 Engine speed** between idling and **1050 rpm** – **PR064 Coolant temperature** ≥ **50°C**
	Priorities when dealing with a number of faults: Apply the interpretation of faults: **DF026 Cylinder 1 Injector command circuit** and **DF249 Injector commands** first, **if they are present or stored**.
	Special notes: – Check that the stored injector codes are consistent with those engraved on each injector. If not, run command **SC002 Enter injector codes** and follow the procedure. – After an injector has been replaced, run commands **SC002 Enter injector codes** and **SC036 Reinitialise programming** and follow the procedure.
	IMPORTANT **Cylinder no. 1** is located at the timing end. Do not disconnect the injectors when the engine is running. For the removal-refitting of an injector, observe the cleanliness and safety guidelines (see **MR 402 (Vel Satis ph2), MR 361 Espace IV ph2) or MR 395 (Laguna II ph2) Mechanics, 13B, Diesel injection, Diesel fuel injectors: Removal - Refitting).**

AFTER REPAIR	Deal with any other faults. Clear the fault memory. Switch off the ignition until the end of the power-latch phase, and carry out a road test followed by a check with the **diagnostic tool**.

GETtheMANUALS.org

DF059 CONTINUED	

DF059 appears on the **diagnostic tool** when the engine management computer has detected a fault during the combustion phase several times in succession.
Several components may be responsible:
– the piston rings,
– the piston,
– the valves,
– the injector,
– the heater plug sealing.

If the fault is present:
remove the injector concerned,
if there is no obvious fault in the way the injector has been fitted (notably the injector washer), swap the injector with another from the engine.
Run commands **SC002 Enter injector codes** and **SC036 Reinitialise programming** and follow the procedure.
Restart the engine.
If the injector concerned produces another combustion misfire in its new position, replace it.
If the fault is stored:
– check that no customer complaint occurs, clear the fault and carry out a road test.

If the fault is still present, run **Test 7 Poor injector operation**.
If the fault is still present, contact the Techline.

AFTER REPAIR	Deal with any other faults. Clear the fault memory. Switch off the ignition until the end of the power-latch phase, and carry out a road test followed by a check with the **diagnostic tool**.

GETtheMANUALS.org

DF060 PRESENT OR STORED	MISFIRING ON CYLINDER 2

NOTES	**Conditions for applying the fault finding procedure to a stored fault:** The fault is declared present after: – **PR055 Engine speed** between idling and **1050 rpm** – **PR064 Coolant temperature** ≥ **50°C**
	Priorities when dealing with a number of faults: Apply the interpretation of faults **DF027 Cylinder 2 injector control circuit**, and **DF249 Injector controls**, **first if they are present or stored**.
	Special notes: – Check that the stored injector codes are consistent with those engraved on each injector; if not, run command **SC002 Enter injector codes** and follow the procedure – After an injector has been replaced, run commands **SC002 Enter injector codes** and **SC036 Reinitialise programming** and follow the procedure.
	IMPORTANT **Cylinder no. 1** is located at the timing end. Do not disconnect the injectors when the engine is running. When removing-refitting an injector, observe the cleanliness and safety instructions (see **MR 402 (Vel Satis ph2), MR 361 (Espace IV ph2) or MR 395 (Laguna II ph2) Mechanical 13B Diesel injection, Diesel fuel injectors: Removal - Refitting**).

AFTER REPAIR	Deal with any other faults. Clear the fault memory. Switch off the ignition until the end of the power-latch phase, and carry out a road test followed by a check with the **diagnostic tool**.

EDC16C36_V04_DF060/EDC16C36_V08_DF060

GETtheMANUALS.org

DF060 CONTINUED	

DF060 appears on the **diagnostic tool** when the engine management computer has detected a fault during the combustion phase several times in succession.
Several components may be responsible:
– the piston rings,
– the piston,
– the valves,
– the injector,
– the heater plug sealing.

If the fault is present:
remove the injector concerned,
if there is no obvious fault in the way the injector has been fitted (notably the injector washer), swap the injector with another from the engine.
Run commands **SC002 Enter injector codes** and **SC036 Reinitialise programming** and follow the procedure.
Restart the engine.
If the injector concerned produces another combustion misfire in its new position, replace it.
If the fault is stored:
– check that no customer complaint occurs, clear the fault and carry out a road test.

If the fault is still present, run **Test 7 Poor injector operation**.
If the fault is still present, contact the Techline.

AFTER REPAIR	Deal with any other faults. Clear the fault memory. Switch off the ignition until the end of the power-latch phase, and carry out a road test followed by a check with the **diagnostic tool**.

GETtheMANUALS.org

DF061 PRESENT OR STORED	MISFIRING ON CYLINDER 3

NOTES	**Conditions for applying the fault finding procedure to a stored fault:** The fault is declared present after: – **PR055 Engine speed** between idling and **1050 rpm** – **PR064 Coolant temperature** ≥ **50°C**
	Priorities when dealing with a number of faults: Apply the interpretation of faults **DF028 Cylinder 3 injector control circuit** and **DF249 Injector control, first if they are present or stored**.
	Special notes: – Check that the stored injector codes are consistent with those engraved on each injector; if not, run command **SC002 Enter injector codes** and follow the procedure – After an injector has been replaced, run commands **SC002 Enter injector codes** and **SC036 Reinitialise programming** and follow the procedure.
	IMPORTANT **Cylinder no. 1** is located at the timing end. Do not disconnect the injectors when the engine is running. When removing-refitting an injector, observe the cleanliness and safety instructions (see **MR 402 (Vel Satis ph2), MR 361 (Espace IV ph2) or MR 395 (Laguna II ph2) Mechanical 13B Diesel injection, Diesel fuel injectors: Removal - Refitting**).

AFTER REPAIR	Deal with any other faults. Clear the fault memory. Switch off the ignition until the end of the power-latch phase, and carry out a road test followed by a check with the **diagnostic tool**.

EDC16C36_V04_DF061/EDC16C36_V08_DF061

GETtheMANUALS.org

DF061 CONTINUED	

DF061 appears on the **diagnostic tool** when the engine management computer has detected a fault during the combustion phase several times in succession.
Several components may be responsible:
– the piston rings,
– the piston,
– the valves,
– the injector,
– the heater plug sealing.

If the fault is present:
remove the injector concerned,
if there is no obvious fault in the way the injector has been fitted (notably the injector washer), swap the injector with another from the engine.
Run commands **SC002 Enter injector codes** and **SC036 Reinitialise programming** and follow the procedure.
Restart the engine
If the injector concerned produces another combustion misfire in its new position, replace it.
If the fault is stored:
– check that no customer complaint has been declared; clear the fault and carry out a road test.

If the fault is still present, run **Test 7 Poor injector operation**.
If the fault is still present, contact the Techline.

AFTER REPAIR	Deal with any other faults. Clear the fault memory. Switch off the ignition until the end of the power-latch phase, and carry out a road test followed by a check with the **diagnostic tool**.

GETtheMANUALS.org

DF062 PRESENT OR STORED	MISFIRING ON CYLINDER 4

NOTES	**Conditions for applying the fault finding procedure to a stored fault:** The fault is declared present after: – **PR055 Engine speed** between idling and **1050 rpm** – **PR064 Coolant temperature** ≥ **50°C**
	Priorities when dealing with a number of faults: Deal with the interpretation of faults **DF029 Cylinder 4 injector control circuit** and **DF249 Injector control**, first if they are present or stored.
	Special notes: – Check that the stored injector codes are consistent with those engraved on each injector; if not, run command **SC002 Enter injector codes** and follow the procedure – After an injector has been replaced, run commands **SC002 Enter injector codes** and **SC036 Reinitialise programming** and follow the procedure.
	IMPORTANT **Cylinder no. 1** is located at the timing end. Do not disconnect the injectors when the engine is running. When removing-refitting an injector, observe the cleanliness and safety instructions (see **MR 402 (Vel Satis ph2), MR 361 (Espace IV ph2) or MR 395 (Laguna II ph2) Mechanical 13B Diesel injection, Diesel fuel injectors: Removal - Refitting**).

AFTER REPAIR	Deal with any other faults. Clear the fault memory. Switch off the ignition until the end of the power-latch phase, and carry out a road test followed by a check with the **diagnostic tool**.

EDC16C36_V04_DF062/EDC16C36_V08_DF062

GETtheMANUALS.org

DF062 CONTINUED	

DF062 appears on the **diagnostic tool** when the engine management computer has detected a fault during the combustion phase several times in succession.
Several components may be responsible:
– the piston rings,
– the piston,
– the valves,
– the injector,
– the heater plug sealing.

If the fault is **present**:
remove the injector concerned,
if there is no obvious fault in the way the injector has been fitted (notably the injector washer), swap the injector with another from the engine.
Run commands **SC002 Enter injector codes** and **SC036 Reinitialise programming** and follow the procedure.
Restart the engine
If the injector concerned produces another combustion misfire in its new position, replace it.
If the fault is **stored**:
– check that no customer complaint has been declared; clear the fault and carry out a road test.

If the fault is still present, run **Test 7 Poor injector operation**.
If the fault is still present, contact the Techline.

AFTER REPAIR	Deal with any other faults. Clear the fault memory. Switch off the ignition until the end of the power-latch phase, and carry out a road test followed by a check with the **diagnostic tool**.

GETtheMANUALS.org

DF065 PRESENT OR STORED	COMBUSTION MISFIRES 1.DEF: Combustion misfires detected on several cylinders.

NOTES	**Conditions for applying the fault finding procedure to a stored fault:** The fault is declared present after: – **PR055 Engine speed** between idling and **1050 rpm** – **PR064 Coolant temperature** ≥ **50°C**.
	Priorities when dealing with a number of faults: Apply the interpretation of these faults first: **DF249 Injector control**, present or stored, **DF026 Cylinder 1 injector control circuit**, present or stored, **DF027 Cylinder 2 injector control circuit**, present or stored, **DF028 Cylinder 3 injector control circuit**, present or stored, **DF029 Cylinder 4 injector control circuit**, present or stored. Use bornier **Elé.1681** for any operations on the injection computer connectors.
	Special notes: Check that the stored injector codes match those etched on each injector. If not, run command **SC002 Enter injector codes** and follow the procedure.

AFTER REPAIR	Deal with any other faults. Clear the fault memory. Switch off the ignition until the end of the power-latch phase, and carry out a road test followed by a check with the **diagnostic tool**.

EDC16C36_V04_DF065/EDC16C36_V08_DF065

GETtheMANUALS.org

DF065 CONTINUED	

1.DEF	***NOTES***	When removing-refitting an injector, observe the cleanliness and safety instructions (see **MR 402 (Vel Satis ph2), MR 361 (Espace IV ph2) or MR 395 (Laguna II ph2) Mechanical 13B Diesel injection, Diesel fuel injectors: Removal - Refitting**).

DF065 appears on the **diagnostic tool** when the engine management computer has detected a fault during the combustion phase several times in succession.
Several components may be responsible:
– the piston rings,
– the piston,
– the valves,
– the injector,
– the heater plug sealing.

When dealing with a number of misfiring faults, check the conformity of the fuel by running **TEST 9 Diesel fuel conformity check**.
Check the engine compressions.
Carry out the necessary repairs.

If the fault is still present, run **Test 7 Poor injector operation**.
If the fault is still present, contact the Techline.

AFTER REPAIR	Deal with any other faults. Clear the fault memory. Switch off the ignition until the end of the power-latch phase, and carry out a road test followed by a check with the **diagnostic tool**.

GETtheMANUALS.org

DF069 PRESENT OR STORED	IMPACT DETECTED SIGNAL 1.DEF: Impact stored by the injection computer

NOTES	**Conditions for applying the fault finding procedure to stored faults:** The fault is declared present under **+ after ignition feed**.
	Special notes: As soon as the injection computer receives this signal: – engine operation is prohibited, the **level 2** warning light is lit.

The fault appears when the injection computer receives a frontal impact signal from the Airbag computer via the multiplex network.

Do not deal with this fault.

If the vehicle has been involved in an accident:
Carry out any necessary repairs,
– clear the fault,
– switch off the ignition,
– wait for **1 minute**,
– switch on the ignition.
If the fault does not reappear, end of fault finding procedure.
If the fault recurs, run fault finding on the **AIRBAG** computer.

If the vehicle has not been involved in an accident:
Run fault finding on the **AIRBAG** computer (see **88C, Airbag and pretensioners**).

AFTER REPAIR	Deal with any other faults. Clear the fault memory. Switch off the ignition until the end of the power-latch phase, and carry out a road test followed by a check with the **diagnostic tool**.

EDC16C36_V04_DF069/EDC16C36_V08_DF069

GETtheMANUALS.org

DF091 PRESENT OR STORED	VEHICLE SPEED SIGNAL 1.DEF: Vehicle speed too high

NOTES	**Conditions for applying the fault finding procedure to a stored fault:** The fault is declared present after a road test.
	Special notes: The vehicle speed signal sent by the ABS computer to the injection computer is greater than the threshold defined in the calibration. Use bornier **Elé. 1681** for any operations on the injection computer connectors

Check the ABS computer connections. Check the injection computer connections. If there is a repair method (see **Technical Note 6015A, Repairing electrical wiring, Wiring: Precautions for repair**), repair the wiring, otherwise replace it.
Run complete fault finding on the ABS (**see 38C Anti-lock braking system**) Repair if necessary.
Run complete fault finding on the multiplex network (**see 88B, Multiplexing**) Repair if necessary.
If the fault is still present, contact the Techline.

AFTER REPAIR	Deal with any other faults. Clear the fault memory. Switch off the ignition until the end of the power-latch phase, and carry out a road test followed by a check with the **diagnostic tool**.

EDC16C36_V04_DF091/EDC16C36_V08_DF091

GETtheMANUALS.org

DF098 PRESENT OR STORED	FUEL TEMPERATURE SENSOR CIRCUIT CC.0: Short circuit to earth. CO.1: Open circuit or short circuit to +12 V

NOTES	**Conditions for applying the fault finding procedure to a stored fault:** The fault is declared present after the ignition has been switched on.
	Special notes: If the fault is present, – safe value **PR063 Fuel temperature = 100°C**, – use bornier **Elé. 1681** for all operations on the engine management computer connectors.
	Use the **Vel Satis ph2, Espace IV ph2, Laguna II ph2** wiring diagram Technical Note.

CC.0	***NOTES***	None.

Check the fuel temperature sensor connections.
check the engine management computer connections.
If there is a repair method (see **Technical Note 6015A, Repairing electrical wiring, Wiring: Precautions for repair**), repair the wiring, otherwise replace it.

Measure **the resistance** of the fuel temperature sensor between the following connections**:**
– Connection code **3FAB**,
– Connection code **3LD**,
of component **1066**.
Replace the sensor if its resistance is not:
3820 Ω ± 282 Ω at 10°C
2050 Ω ± 123 Ω at 25°C
810 Ω ± 47 Ω at 50°C

Check the **insulation** to **earth** of the following connection:
– Connection code **3FAB** between components **1066 and 120**.
If the connection or connections are faulty and there is a repair procedure (see **Technical Note 6015A, Electrical wiring repair, Wiring: Precautions for repair**), repair the wiring, otherwise replace it.

AFTER REPAIR	Deal with any other faults. Clear the fault memory. Switch off the ignition until the end of the power-latch phase, and carry out a road test followed by a check with the **diagnostic tool**.

EDC16C36_V04_DF098/EDC16C36_V08_DF098

GETtheMANUALS.org

DF098 CONTINUED	

CO.1	***NOTES***	None.

Check the fuel temperature sensor connections.
Check the computer connections.
If there is a repair procedure (see **Technical Note 6015A, Repairing electrical wiring, Wiring: Precautions for repair**) repair the wiring, otherwise replace it.

Measure **the resistance** of the fuel temperature sensor between the following connections**:**
– Connection code **3FAB**,
– Connection code **3LD**,
of component **1066**.
Replace the sensor if its resistance is not:
3820 Ω ± 282 Ω at 10°C
2050 Ω ± 123 Ω at 25°C
810 Ω ± 47 Ω at 50°C

Check the **continuity and insulation** to **+ 12 V** on the following connections:
– Connection code **3FAB**,
– Connection code **3LD**,
between components **1066 and 120**.
If the connection or connections are faulty and there is a repair procedure (see **Technical Note 6015A, Electrical wiring repair, Wiring: Precautions for repair**), repair the wiring, otherwise replace it.

AFTER REPAIR	Deal with any other faults. Clear the fault memory. Switch off the ignition until the end of the power-latch phase, and carry out a road test followed by a check with the **diagnostic tool**.

GETtheMANUALS.org

DF107 PRESENT OR STORED	COMPUTER MEMORY 1.DEF: Internal electronic fault

NOTES	**Conditions for applying the fault finding procedure to a stored fault:** The fault is declared present after the ignition has been switched on.
	Special notes: The **level 1 and European On Board Diagnostic** warning lights are lit. Use bornier **Elé.1681** for any operations on the injection computer connectors.
	Use the **Vel Satis ph2, Espace IV ph2, Laguna II ph2** wiring diagram Technical Note.

If the fault is **stored**, clear the fault from the computer memory.
Switch off the ignition, wait for the **diagnostic tool** message (maximum time **8 minutes**): **Communication lost with computer: EDC16C36, check the tool connection and computer supply** before switching the ignition back on. Start the engine and re-establish dialogue.
This fault may be linked to a write error following disconnection of the battery when the computer was in the process of writing to the EEPROM phase (computer memory).
If this is the case, loading a new calibration will remove the fault.
If a more recent calibration is available, load this calibration on to the computer.

If the fault is still present:
– use the command **RZ034 Computer memory,**
– Switch off the ignition and wait for the computer dialogue lost message,
– switch on the ignition again,
– configure the injector codes using command **SC002 Enter injector codes**.
– Run the programming commands (see **Configuration and programming**),
– switch off the ignition and wait for the message loss of communication with the computer.
– Perform a road test to reinitialise the vehicle parameters.

If the vehicle is not new (mileage greater than approximately **6 miles (10 km)**):
– Check that there are no leaks or blockages in the exhaust pipe,
Repair if necessary.

– Perform an After-Sales regeneration using command **SC017 Particle filter regeneration.**
– Drain the engine oil (see **MR 395 (Laguna II ph2), MR 402 (Vel Satis ph2) or MR 361 (Espace IV ph2), Mechanical, 10A Engine and peripherals, Engine oil: Draining - Filling**).

If the fault is still present, contact the Techline.

AFTER REPAIR	Deal with any other faults. Clear the fault memory. Switch off the ignition until the end of the power-latch phase, and carry out a road test followed by a check with the **diagnostic tool**.

EDC16C36_V04_DF107/EDC16C36_V08_DF107

GETtheMANUALS.org

DF119 PRESENT OR STORED	CAMSHAFT SENSOR SIGNAL 1.DEF: No camshaft signal or timing fault (belt tension or timing adjustment). 2.DEF: Feed fault, signal interference, camshaft sensor internal fault.

NOTES	**Conditions for applying the fault finding procedure to a stored fault:** The fault is declared present after: – starting the engine, – a road test.
	Special notes: If the fault is present, the **level 1** warning light will illuminate. Use bornier **Elé.1681** for any operations on the injection computer connectors.
	Use the **Vel Satis ph2, Espace IV ph2, Laguna II ph2** Wiring Diagram Technical Note.

1.DEF	***NOTES***	None.

Check the camshaft sensor connections.
check the engine management computer connections.
If there is a repair method (see **Technical Note 6015A, Repairing electrical wiring, Wiring: Precautions for repair**), repair the wiring, otherwise replace it.

WARNING
If the fault is **stored**:
Visually check the condition of the surrounding area.
If, on detection of the fault, the engine speed is considerably lower than the idling speed (**less than 400 rpm**) and no customer complaint is declared (warning light indicated by the customer does not come on and vehicle can be started), the fault was detected because the engine had stalled. Clear the fault and carry out a road test.

AFTER REPAIR	Deal with any other faults. Clear the fault memory. Switch off the ignition until the end of the power-latch phase, and carry out a road test followed by a check with the **diagnostic tool**.

EDC16C36_V04_DF119/EDC16C36_V08_DF119

GETtheMANUALS.org

DF119 CONTINUED 1	

Check the sensor mounting and the conformity of the camshaft target.
Check that the camshaft sensor/camshaft sprocket air gap is **3 mm maximum**.

Check the electrical specifications of the sensor:
Note: be sure to measure the resistance between the connections indicated.

1. Disconnect the sensor before measuring the resistance with an Ohmmeter or multimeter.

2. Measure the resistance between the following connections:

– Connection codes **3FB and 3PL** (earth and supply) of component **746**
The resistance must be between **7.2 kΩ and 13.4 kΩ** (**10.2 kΩ** nominal).

3. Measure the resistance between the following connections:

– Connection codes **3FB and 3CQ** (output and supply) of component **746**
The resistance should be greater than **100 kΩ**.

4. The resistance between connections **3PL and 3CQ** of **component 746** (output and earth) should be greater than **100 kΩ**.

If the values are incorrect, replace the camshaft sensor.

Check the **continuity** of the following connections:
– Connection code **3PL**,
– Connection code **3CQ**,
between components **746 and 120**.

Check **for + 12 V after relay** feed on the following connection:
– **3FB** of component **746.**

If the connection or connections are faulty and there is a repair procedure (see **Technical Note 6015A, Electrical wiring repair, Wiring: Precautions for repair**), repair the wiring, otherwise replace it.

If the fault is still present, replace the camshaft sensor.

AFTER REPAIR	Deal with any other faults. Clear the fault memory. Switch off the ignition until the end of the power-latch phase, and carry out a road test followed by a check with the **diagnostic tool**.

GETtheMANUALS.org

DF119 CONTINUED 2	

2.DEF	***NOTES***	**Priorities when dealing with a number of faults:** Deal with fault **DF120 Engine speed sensor signal, 1.DEF** first if it is present or stored.

Check the camshaft sensor connections. check the engine management computer connections. If there is a repair method (see **Technical Note 6015A, Repairing electrical wiring, Wiring: Precautions for repair**), repair the wiring, otherwise replace it.
Check the sensor mounting and the conformity of the camshaft target. Check that the camshaft sensor/camshaft sprocket air gap is **3 mm maximum**.
Check the **continuity** of the following connections: – Connection code **3PL**, – Connection code **3CQ**, between components **746 and 120**. Check **for + 12 V after relay** feed on the following connection: – **3FB** of component **746** If the connection or connections are faulty and there is a repair procedure (see **Technical Note 6015A, Electrical wiring repair, Wiring: Precautions for repair**), repair the wiring, otherwise replace it.
– Check the tension of the **timing belt.** – Check the conformity of the camshaft sprocket/camshaft assembly. – Check the timing adjustment. Carry out the necessary repairs.
If the fault is still present, contact the Techline.

AFTER REPAIR	Deal with any other faults. Clear the fault memory. Switch off the ignition until the end of the power-latch phase, and carry out a road test followed by a check with the **diagnostic tool**.

GETtheMANUALS.org

DF120 PRESENT OR STORED	ENGINE SPEED SENSOR SIGNAL 1.DEF: Engine speed signal interference, broken tooth on flywheel or engine speed sensor internal fault 2.DEF: No engine speed signal, or interference affecting the engine speed signal.

NOTES	**Conditions for applying the fault finding procedure to a stored fault:** If the fault is declared present after: – when an attempt is made to start the engine, – starting the engine, – a road test.
	Special notes: The engine speed sensor is consistent with the camshaft sensor. If the fault is present, the **level 2** warning light are lit. Use bornier **Elé.1681** for any operations on the injection computer connectors.
	Use the **Vel Satis ph2, Espace IV ph2, Laguna II ph2** wiring diagram Technical Note.

Check the engine speed sensor connections.
If there is a repair method (see **Technical Note 6015A, Repairing electrical wiring, Wiring: Precautions for repair**), repair the wiring, otherwise replace it.
Check that the sensor is securely attached.

Measure the **resistance** of the engine speed sensor between the following connections:
– Connection code **3BG**,
– Connection code **3BL**,
of component **149**.
If the **winding resistance** is not between the interval indicated below, **175** and **295** Ω at **23°C**, replace the engine speed sensor.

Check the injection computer connections.
If there is a repair method (see **Technical Note 6015A, Repairing electrical wiring, Wiring: Precautions for repair**), repair the wiring, otherwise replace it.

Check the **continuity, insulation** and the **absence of interference resistance** on the following connections:
– Connection code **3BG**,
– Connection code **3BL**,
between components **149 and 120**.
If the connection or connections are faulty and there is a repair procedure (see **Technical Note 6015A, Electrical wiring repair, Wiring: Precautions for repair**), repair the wiring, otherwise replace it.

If the fault is still present, replace the engine speed sensor.

AFTER REPAIR	Deal with any other faults. Clear the fault memory. Switch off the ignition until the end of the power-latch phase, and carry out a road test followed by a check with the **diagnostic tool**.

EDC16C36_V04_DF120/EDC16C36_V08_DF120

GETtheMANUALS.org

DF151 PRESENT OR STORED	MAIN RELAY CIRCUIT 1.DEF: Relay cut off too soon 2.DEF: Relay cut off too late

NOTES	**Special notes:** The level 1 warning light is illuminated. Use the **Vel Satis ph2, Espace IV ph2, Laguna II ph2** wiring diagram Technical Note.

1.DEF	***NOTES***	None.

Check the connections of the injection supply relay mounting.
check the engine management computer connections.
If there is a repair method (see **Technical Note 6015A, Repairing electrical wiring, Wiring: Precautions for repair**), repair the wiring, otherwise replace it.

Check the tightness and the condition of the "**+** " and "**-**" battery terminals.

Check the conformity of the main relay (relay removed):
Insulation of the contacts between the following connections**:**
– Connection code **3FB**,
– Connection code **BP37**,
of component **983**.

Resistance of the coil between the following connections**:**
– Connection code **3AA**,
– Connection code **BP37**,
of component **983**.
Replace the relay if the resistance is **less than 6** Ω or **greater than 1 k**Ω.

AFTER REPAIR	Deal with any other faults. Clear the fault memory. Switch off the ignition until the end of the power-latch phase, and carry out a road test followed by a check with the **diagnostic tool**.

EDC16C36_V04_DF151/EDC16C36_V08_DF151

GETtheMANUALS.org

DF151 CONTINUED 1	

Check for **+ 12 V battery** on the following connections:
– Connection code **BP37** of component **983**.

Check for **+ 12 V after relay** feed on the following connection:
– Connection code **3FB** of component **983**.

Check the **continuity and absence of any interference resistance** on the following connection:
– Connection code **3AA** between components **983 and 120**.

Check for **+ 12 V after relay** on the following connections:
– Connection code **3FB**,
– Connection code **AP29**,
of component **120**.

Check the conformity of the engine management computer earths:
– Connection code **NT** of component **120**.

Check the conformity of fuse **FM3** in the engine fuse and relay box (crimping and condition of wires on terminals).
Check the conformity of the impact sensor: incorrect contact (depending on equipment).

If the fault is still present, replace the injection supply relay.

AFTER REPAIR	Deal with any other faults. Clear the fault memory. Switch off the ignition until the end of the power-latch phase, and carry out a road test followed by a check with the **diagnostic tool**.

GETtheMANUALS.org

DF151 CONTINUED 2	

2.DEF	*NOTES*	None.

Check the main relay connections. check the engine management computer connections. If there is a repair procedure (see **Technical Note 6015A, Repairing electrical wiring, Wiring: Precautions for repair**) repair the wiring, otherwise replace it.
Check the conformity of the main relay (relay removed): Insulation of the contacts between the following connections: – Connection code **3FB**, – Connection code **BP37**, of component **983**. Resistance of the coil between the following connections: – Connection code **3AA**, – Connection code **BP37**, of component **983**. Replace the relay if the resistance is **less than 6** Ω or **greater than 1 kΩ**.
Check the **continuity and absence of any interference resistance** on the following connection: – Connection code **3AA** between components **983 and 120**. If the connection or connections are faulty and there is a repair procedure (see **Technical Note 6015A, Electrical wiring repair, Wiring: Precautions for repair**), repair the wiring, otherwise replace it.
If the fault is still present, replace the injection supply relay.

AFTER REPAIR	Deal with any other faults. Clear the fault memory. Switch off the ignition until the end of the power-latch phase, and carry out a road test followed by a check with the **diagnostic tool**.

GETtheMANUALS.org

DF165 PRESENT OR STORED	ACCELERATOR PEDAL POSITION SENSOR CIRCUIT 1.DEF: No signal 2.DEF: Accelerator pedal sensor locked 3.DEF: Detection of accelerator pedal depressed at same time as brake pedal.

1.DEF **2.DEF**	***NOTES***	**Priorities when dealing with a number of faults:** Deal with fault **DF012 Sensor supply no. 2 voltage** first, if it is present or stored.
		Conditions for applying the fault finding procedure to a stored fault: The fault occurs if the brake pedal and the accelerator pedal are depressed simultaneously for more than **1 second**.
		Special notes: If the fault is present, – the **level 2** warning light illuminates if **1.DEF** or **2.DEF** is present, – turbocharging and cruise control are not authorised, – the engine speed is fixed at **1400 rpm**. Use bornier **Elé.1681** for any operations on the computer connectors.
		Use the **Vel Satis ph2, Espace IV ph2, Laguna II ph2** wiring diagram Technical Note.

AFTER REPAIR	Deal with any other faults. Clear the fault memory. Switch off the ignition until the end of the power-latch phase, and carry out a road test followed by a check with the **diagnostic tool**.

EDC16C36_V04_DF165/EDC16C36_V08_DF165

GETtheMANUALS.org

DF165 CONTINUED 1	

Check the pedal sensor connections.
Check the injection computer connections.
If there is a repair procedure (see **Technical Note 6015A, Repairing electrical wiring, Wiring: Precautions for repair**) repair the wiring, otherwise replace it.

Measure the **resistance** of the pedal sensor gang 1 between the following connections**:**
– Connection code **3LR**,
– Connection code **3LT**,
of component **921**.
Replace the sensor if the resistance is not **1.2 kΩ ± 0.48 kΩ**.

Measure the **resistance** of the pedal sensor gang 2 between the following connections:
– Connection code **3LU**,
– Connection code **3LV**,
of component **921**.
Replace the sensor if the resistance is not **1.7 kΩ ± 0.68 kΩ**.

Check **the continuity and the absence of interference resistance** of the following connections:
– Connection code **3LR**,
– Connection code **3LS**,
– Connection code **3LT**,
– Connection code **3LU**,
– Connection code **3LV**,
– Connection code **3LW**,
between components **921 and 120.**
If the connection or connections are faulty and there is a repair procedure (see **Technical Note 6015A, Electrical wiring repair, Wiring: Precautions for repair**), repair the wiring, otherwise replace it.

If the fault is still present, contact the Techline

AFTER REPAIR	Deal with any other faults. Clear the fault memory. Switch off the ignition until the end of the power-latch phase, and carry out a road test followed by a check with the **diagnostic tool**.

GETtheMANUALS.org

DF165 CONTINUED 2	

3.DEF	***NOTES***	**Priorities when dealing with a number of faults:** Deal with fault **DF012 Sensor supply no. 2 voltage** first, if it is present or stored.
		Conditions for applying the fault finding procedure to a stored fault: The fault occurs if the brake pedal and the accelerator pedal are depressed simultaneously for more than **30 seconds** without any movement.
		Special notes: Do not interpret the conditions under which the fault occurs.

Make sure that the accelerator pedal is not mechanically jammed (broken spring, floor carpet, etc.). Check that the brake switch is correctly positioned in its housing. If the fault is still present, deal with fault **DF165 2.DEF**.
If the fault is still present, contact the Techline.

AFTER REPAIR	Deal with any other faults. Clear the fault memory. Switch off the ignition until the end of the power-latch phase, and carry out a road test followed by a check with the **diagnostic tool**.

GETtheMANUALS.org

DF195 PRESENT OR STORED	ENGINE SPEED/CAMSHAFT SENSOR CONSISTENCY 1.DEF: Inconsistent signal.

NOTES	**Conditions for applying the fault finding procedure to a stored fault:** The fault is declared present after: – **10 seconds** with the starter active, – a delay of **1 minute** with the engine running.
	Special notes: Use bornier **Elé. 1681** for any operations on the computer connector.

1.DEF	***NOTES***	**Priorities when dealing with a number of faults:** Apply the interpretation of faults **DF119 Camshaft sensor signal** and **DF120 Engine speed sensor signal** first, if they are present or stored.

Check the sensor mounting and the conformity of the camshaft target. Check that the camshaft sensor/camshaft sprocket air gap is **3 mm maximum**. Check the engine speed sensor mounting.
Check the engine speed sensor and camshaft sensor connectors. Check the injection computer connections. If there is a repair method (see **Technical Note 6015A, Repairing electrical wiring, Wiring: Precautions for repair**), repair the wiring, otherwise replace it.
– Check the tension of the **timing belt.** – Check the conformity of the camshaft sprocket/camshaft assembly. – Check the timing adjustment. Carry out the necessary repairs.
If the fault is still present, contact the Techline.

AFTER REPAIR	Deal with any other faults. Clear the fault memory. Switch off the ignition until the end of the power-latch phase, and carry out a road test followed by a check with the **diagnostic tool**.

EDC16C36_V04_DF195/EDC16C36_V08_DF195

GETtheMANUALS.org

DF196 PRESENT OR STORED	PEDAL SENSOR CIRCUIT GANG 1 CO.0: Open circuit or short circuit to earth CC.1: Short circuit to + 12 V 1.DEF: Consistency between gang 1 and gang 2

NOTES	**Priorities when dealing with a number of faults:** Deal with fault **DF011 Sensor supply voltage no. 1** first if it is present or stored
	Conditions for applying the fault finding procedure to a stored fault: The fault is declared present after a series of full load / no load actions on the accelerator pedal.
	Special notes: If the fault is present, – engine torque limited, – cruise control not authorised, – the **level 1** warning light is lit, – the **level 2** warning light is lit if **1.DEF and only if 2 gangs lost**, – the idling speed is **1400 rpm**. Use bornier **Elé.1681** for any operations on the computer connectors.
	Use the **Vel Satis ph2, Espace IV ph2, Laguna II ph2** wiring diagram Technical Note.

AFTER REPAIR	Deal with any other faults. Clear the fault memory. Switch off the ignition until the end of the power-latch phase, and carry out a road test followed by a check with the **diagnostic tool**.

EDC16C36_V04_DF196/EDC16C36_V08_DF196

GETtheMANUALS.org

DF196 CONTINUED 1	

CO.0	***NOTES***	**Dealing with a number of faults:** If there is a simultaneous occurrence of fault **DF198 Pedal sensor circuit gang 2**, check that the pedal sensor connector is connected correctly.

Check the pedal sensor connections.
Check the injection computer connections.
If there is a repair method (see **Technical Note 6015A, Repairing electrical wiring, Wiring: Precautions for repair**), repair the wiring, otherwise replace it.

Measure the **resistance** of the pedal sensor between the following connections**:**
– Connection code **3LR**,
– Connection code **3LT**,
of component **921**.
Replace the sensor if the resistance is not **1.2 kΩ ± 0.48 kΩ**.

Check the **continuity** and **insulation** to **earth** of the following connections:
– Connection code **3LR**,
– Connection code **3LS**,
– Connection code **3LT**,
between components **921 and 120.**
If the connection or connections are faulty and there is a repair procedure (see **Technical Note 6015A, Electrical wiring repair, Wiring: Precautions for repair**), repair the wiring, otherwise replace it.

AFTER REPAIR	Deal with any other faults. Clear the fault memory. Switch off the ignition until the end of the power-latch phase, and carry out a road test followed by a check with the **diagnostic tool**.

GETtheMANUALS.org

DF196 CONTINUED 2	

CC.1	*NOTES*	None.

Check the pedal sensor connections. Check the injection computer connections. If there is a repair method (see **Technical Note 6015A, Repairing electrical wiring, Wiring: Precautions for repair**), repair the wiring, otherwise replace it.
Measure the **resistance** of the pedal sensor between the following connections: – Connection code **3LR**, – Connection code **3LT**, of component **921**. Replace the sensor if the resistance is not **1.2 kΩ ± 0.48 kΩ**.
Check the **continuity** and **insulation** against **+ 12 V** and **+ 5 V** (computer feeds) on the following connections: – Connection code **3LR**, – Connection code **3LS**, – Connection code **3LT**, between components **921 and 120.** If the connection or connections are faulty and there is a repair procedure (see **Technical Note 6015A, Electrical wiring repair, Wiring: Precautions for repair**), repair the wiring, otherwise replace it.

AFTER REPAIR	Deal with any other faults. Clear the fault memory. Switch off the ignition until the end of the power-latch phase, and carry out a road test followed by a check with the **diagnostic tool**.

GETtheMANUALS.org

DF196 CONTINUED 3	

1.DEF	*NOTES*	None.

Check the pedal sensor connections.
Check the injection computer connections.
If there is a repair procedure (see **Technical Note 6015A, Repairing electrical wiring, Wiring: Precautions for repair**) repair the wiring, otherwise replace it.

Measure the **resistance** of the pedal sensor between the **following connections**:
– Connection code **3LR**,
– Connection code **3LT**,
of component **921**.
Replace the sensor if the resistance is not **1.2 kΩ ± 0.48 kΩ**.

Check **for continuity** and **absence of interference resistance** of the following connections:
– Connection code **3LR**,
– Connection code **3LS**,
– Connection code **3LT**,
– Connection code **3LU**,
– Connection code **3LV**,
– Connection code **3LW**,
between components **921 and 120.**
If there is a repair method (see **Technical Note 6015A, Repairing electrical wiring, Wiring: Precautions for repair**), repair the wiring, otherwise replace it.

Check **the insulation** between the following connections:
– Connection code **3LS**,
– Connection code **3LW**,
between components **921 and 120.**
If the connection or connections are faulty and there is a repair procedure (see **Technical Note 6015A, Electrical wiring repair, Wiring: Precautions for repair**), repair the wiring, otherwise replace it.

If the fault is still present, vary the position of the pedal and refer to the **conformity check** to check the operating values of the accelerator pedal sensor.
If the values displayed are inconsistent, replace the accelerator pedal sensor.

AFTER REPAIR	Deal with any other faults. Clear the fault memory. Switch off the ignition until the end of the power-latch phase, and carry out a road test followed by a check with the **diagnostic tool**.

GETtheMANUALS.org

DF198 PRESENT OR STORED	PEDAL SENSOR CIRCUIT GANG 2 CO.0: Open circuit or short circuit to earth CC.1: Short circuit to +12 V 1.DEF: Consistency between gang 1 and gang 2

NOTES	**Priorities when dealing with a number of faults:** Deal with fault **DF012 Sensor feed voltage no. 2** first, if it is present or stored.
	Conditions for applying the fault finding procedure to a stored fault: The fault is declared present after a series of full load / no load actions on the accelerator pedal.
	Special notes: If the fault is present: – engine torque is limited – cruise control not authorised. – the **level 1** warning light is lit, – the **level 2** warning light is lit if **1.DEF and only if 2 gangs lost**, – the idling speed is **1400 rpm**. Use bornier **Elé.1681** for any operations on the computer connectors.
	Use the **Vel Satis ph2, Espace IV ph2, Laguna II ph2** wiring diagram Technical Note.

AFTER REPAIR	Deal with any other faults. Clear the fault memory. Switch off the ignition until the end of the power-latch phase, and carry out a road test followed by a check with the **diagnostic tool**.

EDC16C36_V04_DF198/EDC16C36_V08_DF198

GETtheMANUALS.org

DF198 CONTINUED 1	

CO.0	***NOTES***	**Dealing with a number of faults:** If there is a simultaneous occurrence of fault **DF196 Pedal sensor circuit gang 1**, check that the pedal sensor connector is connected correctly.

Check the pedal sensor connections. Check the injection computer connections. If there is a repair method (see **Technical Note 6015A, Repairing electrical wiring, Wiring: Precautions for repair**), repair the wiring, otherwise replace it.
Measure the **resistance** of the pedal sensor between the following connections: – Connection code **3LU**, – Connection code **3LV**, of component **921**. Replace the sensor if the resistance is not **1.7 kΩ ± 0.68 kΩ**.
Check the **continuity and insulation** to **earth** of the following connections: – Connection code **3LU**, – Connection code **3LV**, – Connection code **3LW**, between components **921 and 120.** If the connection or connections are faulty and there is a repair procedure (see **Technical Note 6015A, Electrical wiring repair, Wiring: Precautions for repair**), repair the wiring, otherwise replace it.

AFTER REPAIR	Deal with any other faults. Clear the fault memory. Switch off the ignition until the end of the power-latch phase, and carry out a road test followed by a check with the **diagnostic tool**.

GETtheMANUALS.org

DF198 CONTINUED 2	

CC.1	*NOTES*	None.

Check the pedal sensor connections.
Check the injection computer connections.
If there is a repair method (see **Technical Note 6015A, Repairing electrical wiring, Wiring: Precautions for repair**), repair the wiring, otherwise replace it.

Measure the **resistance** of the pedal sensor between the following connections:
– Connection code **3LU**,
– Connection code **3LV**,
of component **921**.
Replace the sensor if the resistance is not **1.7 kΩ ± 0.68 kΩ**.

Check the **continuity** and **insulation** against **+ 12 V** and **+ 5 V** (computer feeds) on the following connections:
– Connection code **3LU**,
– Connection code **3LV**,
– Connection code **3LW**,
between components **921 and 120.**
If the connection or connections are faulty and there is a repair procedure (see **Technical Note 6015A, Electrical wiring repair, Wiring: Precautions for repair**), repair the wiring, otherwise replace it.

AFTER REPAIR	Deal with any other faults. Clear the fault memory. Switch off the ignition until the end of the power-latch phase, and carry out a road test followed by a check with the **diagnostic tool**.

GETtheMANUALS.org

DF198 CONTINUED 3	

1.DEF	*NOTES*	None.

Check the pedal sensor connections.
Check the injection computer connections.
If there is a repair method (see **Technical Note 6015A, Repairing electrical wiring, Wiring: Precautions for repair**), repair the wiring, otherwise replace it.

Measure the **resistance** of the pedal sensor between the following connections:
– Connection code **3LU**,
– Connection code **3LV**,
of component **921**.
Replace the sensor if the resistance is not **1.7 kΩ ± 0.68 kΩ**.

Check **for continuity** and **absence of interference resistance** of the following connections:
– Connection code **3LR**,
– Connection code **3LS**,
– Connection code **3LT**,
– Connection code **3LU**,
– Connection code **3LV**,
– Connection code **3LW**,
between components **921 and 120.**
If the connection or connections are faulty and there is a repair procedure (see **Technical Note 6015A, Electrical wiring repair, Wiring: Precautions for repair**), repair the wiring, otherwise replace it.

Check **the insulation** between the following connections:
– Connection code **3LS**,
– Connection code **3LW**,
of component **921**.
If the connection or connections are faulty and there is a repair procedure (see **Technical Note 6015A, Electrical wiring repair, Wiring: Precautions for repair**), repair the wiring, otherwise replace it.

If the fault is still present, vary the position of the pedal and refer to the **conformity check** to check the operating values of the accelerator pedal sensor.
If the values displayed are inconsistent, replace the accelerator pedal sensor.

AFTER REPAIR	Deal with any other faults. Clear the fault memory. Switch off the ignition until the end of the power-latch phase, and carry out a road test followed by a check with the **diagnostic tool**.

GETtheMANUALS.org

DF200 PRESENT OR STORED	ATMOSPHERIC PRESSURE SENSOR 1.DEF: Above maximum threshold 2.DEF: Below minimum threshold

NOTES	**Conditions for applying the fault finding procedure to a stored fault:** The fault is declared present after: – the ignition is switched on. – the engine is started, – a road test.
	Special notes: The **level 1** and **European On Board Diagnostic** warning lights are lit. The atmospheric pressure sensor is integrated in the injection computer, and cannot be separated.
	If the fault is present: – there is light smoke, – the atmospheric pressure value changes to safe mode, **PR035 Atmospheric pressure = 750 mbar**. Use bornier **Elé.1681** for any operations on the computer connectors.

1.DEF **2.DEF**	***NOTES***	None.

Disconnect the injection computer and check the condition of the contacts of its connector.
If there is a repair method (see **Technical Note 6015A, Repairing electrical wiring, Wiring: Precautions for repair**), repair the wiring, otherwise replace it.
Verify the value of **PR035 "Atmospheric pressure"** by comparing it with the reading on a vehicle in the workshop which is correct.
If the value of **PR035 Atmospheric pressure** is not correct (more than **100 mbar** difference between the 2 vehicles), contact the Techline.

AFTER REPAIR	Deal with any other faults. Clear the fault memory. Switch off the ignition until the end of the power-latch phase, and carry out a road test followed by a check with the **diagnostic tool**.

EDC16C36_V04_DF200/EDC16C36_V08_DF200

GETtheMANUALS.org

DF209 PRESENT OR STORED	EGR VALVE POSITION SENSOR CIRCUIT CC.1: Short circuit to + 12 V CO.0: Open circuit or short circuit to earth

NOTES	**Priorities when dealing with a number of faults:** **– DF046 Battery voltage,** **– DF012 Sensor supply voltage no. 2,** if present or stored.
	Conditions for applying the fault finding procedure to a stored fault: The fault is declared present after: – the ignition is switched on. – the engine is started, – a road test.
	Special notes: If the fault is present: – the **European On Board Diagnostic** warning light is lit. – increase in polluting emissions, – EGR programming cut-off: valve in the closed position. Use bornier **Ele. 1681** for all operations on the engine management computer connector.
	For EGR valves with a flat connector, it is not possible to check the sensor resistance.
	Use the **Vel Satis ph2, Espace IV ph2, Laguna II ph2** wiring diagram Technical Note.

CC.1	***NOTES***	None.

AFTER REPAIR	Deal with any other faults. Clear the fault memory. Switch off the ignition until the end of the power-latch phase, and carry out a road test followed by a check with the **diagnostic tool**.

EDC16C36_V04_DF209/EDC16C36_V08_DF209

GETtheMANUALS.org

DF209 CONTINUED 1	

Check the condition of the **EGR valve** connector, component code **1460**.
Check the condition of the engine management computer connector, component code **120**.
If the connectors are faulty and if there is a repair procedure (see **Technical Note 6015A, Repairing electrical wiring, Wiring: Precautions for repair),** repair the connector, otherwise replace the wiring.

Check the **continuity and insulation** against **+12 V** and **+5 V** on the following connections:
– Connection code **3GC** between components **1460** and **120**,
– Connection code **3EL** between components **1460** and **120**,
– Connection code **3JM** between components **1460** and **120**.

Check the **insulation between** the following connections:
– Connection code **3GC** between components **1460** and **120**,
– Connection code **3VP** between components **1460** and **120**,
– Connection code **3EL** between components **1460** and **120**.
If the connection or connections are faulty and there is a repair procedure (see **Technical Note 6015A, Electrical wiring repair, Wiring: Precautions for repair**), repair the wiring, otherwise replace it.

EGR valve with a square connector:
Measure the resistances of the EGR valve between the following connections:
(sensor supply and sensor earth)
– Connection code **3GC** of component **1460**,
– Connection code **3JM** of component **1460**.
Replace the valve if the resistances are not between: **3.9 kΩ < X < 9.1 kΩ**.
EGR valve with a flat connector (with adapter attachment):
Replace the EGR valve.

When replacing the EGR valve, run command **SC036 Reinitialise programming and select EGR valve** to reinitialise the EGR valve offsets (see **Replacement of components**).

If the fault is still present, contact the Techline.

AFTER REPAIR	Deal with any other faults. Clear the fault memory. Switch off the ignition until the end of the power-latch phase, and carry out a road test followed by a check with the **diagnostic tool**.

GETtheMANUALS.org

DF209 CONTINUED 2	

CO.0	*NOTES*	None.

Check the condition of the **EGR valve** connector, component code **1460**.
Check the condition of the engine management computer connector, component code **120**.
If the connectors are faulty and if there is a repair procedure (see **Technical Note 6015A, Repairing electrical wiring, Wiring: Precautions for repair),** repair the connector, otherwise replace the wiring.

Check **the continuity and insulation** from earth of the following connections:
– Connection code **3GC** between components **1460** and **120**,
– Connection code **3EL** between components **1460** and **120**,
– Connection code **3JM** between components **1460** and **120**.
Check the **insulation between** the following connections:
– Connection code **3GC** between components **1460** and **120**,
– Connection code **3EL** between components **1460** and **120**,
– Connection code **3JM** between components **1460** and **120**,
– Connection code **3VQ** between components **1460** and **120**.

If the connection or connections are faulty and there is a repair procedure (see **Technical Note 6015A, Electrical wiring repair, Wiring: Precautions for repair**), repair the wiring, otherwise replace it.

Measure the resistances of the EGR valve between the following connections:
(sensor supply and sensor earth)
– Connection code **3GC** of component **1460**.
– Connection code **3JM** of component **1460**.
Replace the valve if the resistances are not between: **3.9 kΩ < X < 9.1 kΩ**.

When replacing the **EGR** valve, run command **SC036 Reinitialise programming** and select **EGR valve** to reinitialise the EGR valve offsets (see **Replacement of components**).

If the fault is still present, contact the Techline.

AFTER REPAIR	Deal with any other faults. Clear the fault memory. Switch off the ignition until the end of the power-latch phase, and carry out a road test followed by a check with the **diagnostic tool**.

GETtheMANUALS.org

DF226 PRESENT OR STORED	DAMPER VALVE CIRCUIT CO: Open circuit CC.0: Short circuit to earth CC.1: Short circuit to + 12 V CC: Short circuit 1.DEF: Internal electronic fault 2.DEF: External fault finding 3.DEF: Values out of range

NOTES	**Conditions for applying the fault finding procedure to a stored fault:** The fault is declared present after: – switching off the ignition and waiting for **1 minute**, – the ignition is switched on, – a road test, – command **AC012 Damper valve.**
	Special notes: If the fault is present: – it is difficult or even impossible to start the vehicle, – the engine stops noisily, – the **level 1** warning light comes on **except** for **3.DEF**, – EGR is cut off and the valve is closed (regulation), – particle filter regeneration is inhibited. Use bornier **Ele. 1681** for all operations on the engine management computer connector.
	IMPORTANT This fault can result in a rapid and significant fouling of the particle filter.
	Use the **Vel Satis ph2, Espace IV ph2, Laguna II ph2** wiring diagram Technical Note.

AFTER REPAIR	Deal with any other faults. Clear the fault memory. Switch off the ignition until the end of the power-latch phase, and carry out a road test followed by a check with the **diagnostic tool**.

EDC16C36_V04_DF226/EDC16C36_V08_DF226

GETtheMANUALS.org

DF226 CONTINUED 1	

CC **CC.1**	***NOTES***	After any operation on the damper valve, use **SC036 Reinitialise programming**, and then switch off the ignition and wait for the **diagnostic tool** message (Maximum time **8 minutes**): **"Communication lost with computer: EDC16C36, check the tool connection and computer power supply"**.

Check the damper valve connections.
Check the injection computer connections.
If there is a repair method (see **Technical Note 6015A, Repairing electrical wiring, Wiring: Precautions for repair**), repair the wiring, otherwise replace it.

Check **the insulation** against **+ 12 V** of the following connections:
– Connection code **NT** between components **1461 and NT**,
– Connection code **3VM**,
– Connection code **3VN**,
between components **1461 and 120**.

Check the **continuity** and **insulation** between the following connections:
– Connection code **NT** between components **1461 and NT**,
– Connection code **3VM**,
– Connection code **3VN**,
between components **1461 and 120**.
– Connection code **3FB** between components **1461 and 983**,
If the connection or connections are faulty and there is a repair procedure (see **Technical Note 6015A, Electrical wiring repair, Wiring: Precautions for repair**), repair the wiring, otherwise replace it.

If the fault is still present, contact the Techline

AFTER REPAIR	Deal with any other faults. Clear the fault memory. Switch off the ignition until the end of the power-latch phase, and carry out a road test followed by a check with the **diagnostic tool**.

GETtheMANUALS.org

DF226 CONTINUED 2	

CC.0 **CO**	***NOTES***	After any operation on the damper valve, use **SC036 Reinitialise programming**, and then switch off the ignition and wait for the **diagnostic tool** message (Maximum time **8 minutes**): **"Communication lost with computer: EDC16C36, check the tool connection and computer power supply"**.

Check the damper valve connections.
Check the injection computer connections.
If there is a repair method (see **Technical Note 6015A, Repairing electrical wiring, Wiring: Precautions for repair**), repair the wiring, otherwise replace it.

Check the **continuity** and **insulation** against **earth and between** the following connections:
– Connection code **NT** between components **1461 and NT**,
– Connection code **3VM**,
– Connection code **3VN**,
between components **1461 and 120**.
– Connection code **3FB** between components **1461 and 983**,
If the connection or connections are faulty and there is a repair procedure (see **Technical Note 6015A, Electrical wiring repair, Wiring: Precautions for repair**), repair the wiring, otherwise replace it.

If the fault is still present, contact the Techline

AFTER REPAIR	Deal with any other faults. Clear the fault memory. Switch off the ignition until the end of the power-latch phase, and carry out a road test followed by a check with the **diagnostic tool**.

GETtheMANUALS.org

DF226 CONTINUED 3	

1.DEF **2.DEF** **3.DEF**	***NOTES***	**Special notes:** This fault appears when the computer control section has overheated. A road test may be necessary
		Priority when dealing with a number of faults: Deal with the statuses **CO, CC.0, and CC.1** first if they are present or stored. After any operation on the damper valve, use **SC036 Reinitialise programming**, and then switch off the ignition and wait for the **diagnostic tool** message (Maximum time **8 minutes**): **"Communication lost with computer: EDC16C36, check the tool connection and computer power supply"**.

Check the damper valve connections.
Check the injection computer connections.
If there is a repair method (see **Technical Note 6015A, Repairing electrical wiring, Wiring: Precautions for repair**), repair the wiring, otherwise replace it.
Check that the valve is not **mechanically jammed**:
With the engine stopped, disconnect the air inlet hose from the damper valve.
Check that the valve is in the open position.
Start, then switch off the engine.
Check that the valve closes when the engine is switched off and then opens again when the engine has stopped.
If this does not happen, replace the damper valve.

Check that the valve is clean and that there is no **component preventing it from closing** (particularly for **2.DEF**).
Clean if necessary.

AFTER REPAIR	Deal with any other faults. Clear the fault memory. Switch off the ignition until the end of the power-latch phase, and carry out a road test followed by a check with the **diagnostic tool**.

GETtheMANUALS.org

DF226 CONTINUED 4	

Check **the continuity** of the following connections:
– Connection code **3VM**,
– Connection code **3VN**,
between components **1461 and 120**.

Check the **insulation** against **+ 5 V and + 12 V** (computer feeds) of the following connections:
– Connection code **3VM**,
– Connection code **3VN**,
between components **1461 and 120**.
If the connection or connections are faulty and there is a repair procedure (see **Technical Note 6015A, Electrical wiring repair, Wiring: Precautions for repair**), repair the wiring, otherwise replace it.

If the fault is still present, contact the Techline.

AFTER REPAIR	Deal with any other faults. Clear the fault memory. Switch off the ignition until the end of the power-latch phase, and carry out a road test followed by a check with the **diagnostic tool**.

GETtheMANUALS.org

DF228 PRESENT OR STORED	BRAKE SIGNALS 1.DEF: Consistency with redundant brakes 2.DEF: Engine deceleration too high

1.DEF **2.DEF**	***NOTES***	**Conditions for applying the fault finding procedure to a stored fault:** The fault is declared **present** after the brake pedal is depressed.
		Special notes: If the fault is present, the cruise control/speed limiter is switched off. Use bornier **Elé. 1681** for all operations on the engine management computer connectors.
		Use the **Vel Satis ph2, Espace IV ph2, Laguna II ph2** wiring diagram Technical Note.

STEP 1:
From the **List of statuses** menu, check **ET012 Primary brake contact** and **ET013 Secondary brake contact** and check:
– brake pedal in rest position: **ET012** = **RELEASED** and **ET013** = **RELEASED**
– brake pedal depressed: **ET012** = **DEPRESSED** and **ET013** = **DEPRESSED**

Has **ET013 Secondary brake contact** been correctly recognised?
YES, move on to **STEP 2.**
NO, move on to **STEP 4.**

STEP 2:
Has **ET012 Primary brake contact** been correctly recognised?
YES, clear the fault. End of fault finding procedure.
NO, move on to **STEP 3.**

AFTER REPAIR	Deal with any other faults. Clear the fault memory. Switch off the ignition until the end of the power-latch phase, and carry out a road test followed by a check with the **diagnostic tool**.

EDC16C36_V04_DF228/EDC16C36_V08_DF228

GETtheMANUALS.org

DF228 CONTINUED 1	

STEP 3:
Check the connections of the brake pedal switch, the ABS computer, the electronic stability program computer and the engine management computer.
If there is a repair method (see **Technical Note 6015A, Repairing electrical wiring, Wiring: Precautions for repair**), repair the wiring, otherwise replace it.
Check **for + 12 V** after ignition feed on the **connections** of the brake pedal switch connector and the condition of the fuse.
– Connection codes **AP10 and SP13** of component **160**.
Disconnect the ABS - ESP (if fitted) and check the **continuity and insulation** from **+ 12 V** and **earth** of the following connection:
– Connection code **65A or 65G** between components **160 and 1094.**

Check that the brake pedal switch is working correctly:
in rest position: infinite resistance insulation between the following connections**:**
– Connection code **65A or 65G**,
– Connection code **AP10**
of component **160**.

depressed: continuity between the following connections:
– Connection code **65A or 65G**,
– Connection code **AP10**
of component **160**.

Replace the switch if necessary.
If the fault is still present, **run fault finding on the Anti-lock Braking System - electronic stability program**; if no irregularity is detected, then **run fault finding on the multiplex network**.

AFTER REPAIR	Deal with any other faults. Clear the fault memory. Switch off the ignition until the end of the power-latch phase, and carry out a road test followed by a check with the **diagnostic tool**.

GETtheMANUALS.org

DF228 CONTINUED 2	

STEP 4
Check the brake pedal switch connections and the engine management computer connections.
If there is a repair method (see **Technical Note 6015A, Repairing electrical wiring, Wiring: Precautions for repair**), repair the wiring, otherwise replace it.

Check the condition and adjustment of the brake-pedal switch. Repair if necessary.
Check **for + 12 V** after ignition feed on the **connections** of the brake pedal switch connector and the condition of the fuse.
– Connection codes **AP10 and SP13** of component **160**.

Check the **continuity and insulation** against **+ 12 V** and against **earth** of the following connection:
– Connection code **5A** between components **160 and 120/645/119**.

Check that the brake pedal switch is working correctly:
in rest position: infinite resistance insulation between the following connections**:**
– Connection codes **SP13 and 5A** of component **160**.

depressed: continuity between the following connections**:**
– Connection codes **SP13 and 5A** of component **160**.

Replace the switch if necessary.
Check the brake pedal statuses, go to **STEP 1**.

AFTER REPAIR	Deal with any other faults. Clear the fault memory. Switch off the ignition until the end of the power-latch phase, and carry out a road test followed by a check with the **diagnostic tool**.

GETtheMANUALS.org

DF249 PRESENT OR STORED	INJECTOR CONTROL 1.DEF: Internal electronic fault

NOTES	**Conditions for applying the fault finding procedure to a stored fault:** The fault is declared present after: – the ignition is switched on, – the engine is started.
	Priority when dealing with a number of faults: Deal with faults **DF046 Battery voltage, DF026 Cylinder 1 injector control circuit, DF027 Cylinder 2 injector control circuit, DF028 Cylinder 3 injector control circuit and DF029 Cylinder 4 injector control circuit** first if they are present or stored.
	Special notes: In some cases if the fault is present, the **level 2** warning light illuminates and the engine stops. Use bornier **Elé. 1681** for all operations on the engine management computer connectors.
	Use the **Vel Satis ph2, Espace IV ph2, Laguna II ph2** wiring diagram Technical Note.

This fault appears when the computer detects a fault on the injector control section.
Check the injector connections. check the engine management computer connections. If there is a repair method (see **Technical Note 6015A, Repairing electrical wiring, Wiring: Precautions for repair**), repair the wiring, otherwise replace it.

AFTER REPAIR	Deal with any other faults. Clear the fault memory. Switch off the ignition until the end of the power-latch phase, and carry out a road test followed by a check with the **diagnostic tool**.

EDC16C36_V04_DF249/EDC16C36_V08_DF249

GETtheMANUALS.org

DF249 CONTINUED	

Check the **continuity** and **insulation** of the following connections:
– Connection code **3KW**,
– Connection code **3CR**,
between components **193 and 120**.
– Connection code **3KX**,
– Connection code **3CS**,
between components **194 and 120**.
– Connection code **3KY**,
– Connection code **3CT**,
between components **195 and 120**.
– Connection code **3KZ**,
– Connection code **3CU**,
between components **196 and 120**.

If the fault is still present, contact the Techline.

AFTER REPAIR	Deal with any other faults. Clear the fault memory. Switch off the ignition until the end of the power-latch phase, and carry out a road test followed by a check with the **diagnostic tool**.

GETtheMANUALS.org

DF272 PRESENT OR STORED	EGR VALVE CONTROL CIRCUIT CO: Open circuit CC.0: Short circuit to earth CC.1: Short circuit to + 12 V CC: Short circuit

NOTES	**Conditions for applying the fault finding procedure to a stored fault:** The fault is declared present after: – the ignition is switched on. – the engine is started, – a road test.
	Special notes: If the fault is present: – the **European On Board Diagnostic** warning light is lit, – the EGR function is inhibited. – there is smoke coming from the exhaust. Use bornier **Ele. 1681** for all operations on the engine management computer connector.
	Use the **Vel Satis ph2, Espace IV ph2, Laguna II ph2** wiring diagram Technical Note.

CO	***NOTES***	None.

Check the condition of the **EGR valve** connector, component code **1460**. Check the condition of the engine management computer connector, component code **120**. If the connectors are faulty and if there is a repair procedure (see **Technical Note 6015A, Repairing electrical wiring, Wiring: Precautions for repair),** repair the connector, otherwise replace the wiring.
Check the **continuity** of the following connections: – Connection code **3VP** between components **1460** and **120**, – Connection code **3VQ** between components **1460** and **120**. If the connection or connections are faulty and there is a repair procedure (see **Technical Note 6015A, Electrical wiring repair, Wiring: Precautions for repair**), repair the wiring, otherwise replace it.

AFTER REPAIR	Deal with any other faults. Clear the fault memory. Switch off the ignition until the end of the power-latch phase, and carry out a road test followed by a check with the **diagnostic tool**.

EDC16C36_V04_DF272/EDC16C36_V08_DF272

GETtheMANUALS.org

DF272 CONTINUED 1	

Measure the **resistance** of the EGR valve between the **following connections**:
– Connection code **3VP** of component **1460**,
– Connection code **3VQ** of component **1460**.
Replace the valve if the resistance is not between **1 Ω < X < 400 Ω**.
When replacing the EGR valve, run command **SC036 Reinitialise programming** and select **EGR valve** to reinitialise the EGR valve offsets (see **Replacement of components**).

If the fault is still present, contact the Techline.

CC.0 **CC.1**	***NOTES***	None.

Check the condition of the **EGR valve** connector, component code **1460**.
Check the condition of the engine management computer connector, component code **120**.
If the connectors are faulty and if there is a repair procedure (see **Technical Note 6015A, Repairing electrical wiring, Wiring: Precautions for repair),** repair the connector, otherwise replace the wiring.

Check the insulation from **+ 12 V** of the following connections:
– Connection code **3VP** between components **1460** and **120**,
– Connection code **3VQ** between components **1460** and **120**.

Check the insulation against **+ 5 V** (computer supplies) of the following connections:
– Connection code **3VP** between components **1460** and **120**,
– Connection code **3VQ** between components **1460** and **120**.

Check the insulation from earth of the following connections:
– Connection code **3VP** between components **1460** and **120**,
– Connection code **3VQ** between components **1460** and **120**.
If the connection or connections are faulty and there is a repair procedure (see **Technical Note 6015A, Electrical wiring repair, Wiring: Precautions for repair**), repair the wiring, otherwise replace it.

AFTER REPAIR	Deal with any other faults. Clear the fault memory. Switch off the ignition until the end of the power-latch phase, and carry out a road test followed by a check with the **diagnostic tool**.

GETtheMANUALS.org

DF272 CONTINUED 2	

Measure the **resistance** of the EGR valve between the **following connections**:
– Connection code **3VP** of component **1460**,
– Connection code **3VQ** of component **1460**.
Replace the valve if the resistance is not between **1 Ω < X < 400** Ω.
When replacing the EGR valve, run command **SC036 Reinitialise programming** and select **EGR valve** to reinitialise the EGR valve offsets (see **Replacement of components**).

If the fault is still present, contact the Techline.

CC	*NOTES*	None.

Check the condition of the **EGR valve** connector, component code **1460**.
Check the condition of the engine management computer connector, component code **120**.
If the connectors are faulty and if there is a repair procedure (see **Technical Note 6015A, Repairing electrical wiring, Wiring: Precautions for repair),** repair the connector, otherwise replace the wiring.

Check the **insulation between** the following connections:
– Connection code **3VP** between components **1460** and **120**,
– Connection code **3VQ** between components **1460** and **120**.
If the connection or connections are faulty and there is a repair procedure (see **Technical Note 6015A, Electrical wiring repair, Wiring: Precautions for repair**), repair the wiring, otherwise replace it.

Measure the **resistance** of the EGR valve between the **following connections**:
– Connection code **3VP** of component **1460**,
– Connection code **3VQ** of component **1460**.
Replace the valve if the resistance is not between **1 Ω < X < 400** Ω.
When replacing the EGR valve, run command **SC036 Reinitialise programming** and select **EGR valve** to reinitialise the EGR valve offsets (see **Replacement of components**).

If the fault is still present, contact the Techline.

AFTER REPAIR	Deal with any other faults. Clear the fault memory. Switch off the ignition until the end of the power-latch phase, and carry out a road test followed by a check with the **diagnostic tool**.

GETtheMANUALS.org

DF276 PRESENT OR STORED	INJECTOR CODE PROGRAMMING 1.DEF: No code stored. 2.DEF: Internal electronic fault during programming

NOTES	**Conditions for applying the fault finding procedure to a stored fault:** The fault is declared present after the ignition has been switched on.
	Special notes: If the fault is present: – the injection flow will be limited, – torque and performance will be limited and engine speed restricted to **1500 rpm** maximum, – the **level 1** warning light is illuminated. Use bornier **Ele. 1681** for all operations on the engine management computer connector.

1.DEF **2.DEF**	***NOTES***	This fault appears: – when an incorrect injector code has been entered using command **SC002 Enter injector codes**. – after replacing the injection computer, – after (re)programming.

Check the injector codes and reprogram the correct codes using command **SC002 Enter injector codes**.

Note:
If the computer is new or has just been reprogrammed, only run command **SC001 Write saved data** if you have been able to carry out a backup procedure on the replaced computer (see **Interpretation of commands**).
– After the codes have been written:
– Switch off the ignition.
– Wait for the **diagnostic tool** message (maximum time **8 minutes**): **Communication lost with computer: EDC16C36, check the tool connection and computer supply**, and switch the ignition back on.
– Establish dialogue and clear the fault memory.
– End of the procedure.

If the fault has become ***stored***, clear the fault memory and end the operation.

If the fault is **present**, contact the Techline.

AFTER REPAIR	Deal with any other faults. Clear the fault memory. Switch off the ignition until the end of the power-latch phase, and carry out a road test followed by a check with the **diagnostic tool**.

EDC16C36_V04_DF276/EDC16C36_V08_DF276

GETtheMANUALS.org

DF293 PRESENT OR STORED	WATER IN DIESEL FUEL SENSOR 1.DEF: Open circuit on the line or water in diesel fuel.

NOTES	**Conditions for applying the fault finding procedure to a stored fault:** The fault is declared present after: – the ignition is switched on, – a road test.
	Special notes: If this fault is present, risk of engine damage if fault **DF293** not dealt with. Use bornier **Ele. 1681** for all operations on the engine management computer connector. **IMPORTANT** **Please observe the cleanliness guidelines and safety advice.**
	Use the **Vel Satis ph2, Espace IV ph2, Laguna II ph2** wiring diagram Technical Note.

Make sure there is **no water** in the fuel filter.
Bleed the fuel filter and the low and high pressure diesel circuit, if necessary, see **MR 402 (Vel Satis ph2), MR 361 (Espace IV ph2) or MR 395 (Laguna II ph2) Mechanical 13A and 13B Diesel injection).**

Start the engine and wait **at least 1 minute** to confirm the repair.
If the fault was stored but not present, carry out a road test (see **Note**).
If the fault does not reappear, end of fault finding procedure.

Check the **continuity, insulation and the absence of interference resistance** on the following connection:
– Connection code **3WT** between components **414** and **120**.
Check the +12 V after relay feed of the water detection sensor:
– Connection code **3FB** of component **414**
Check the earth of the water detection sensor:
– Connection code **NT** of component **414**.
If the connection or connections are faulty and there is a repair procedure (see **Technical Note 6015A, Electrical wiring repair, Wiring: Precautions for repair**), repair the wiring, otherwise replace it.
– Start the engine and wait **at least 1 minute** to confirm the repair.

AFTER REPAIR	Deal with any other faults. Clear the fault memory. Switch off the ignition until the end of the power-latch phase, and carry out a road test followed by a check with the **diagnostic tool**.

EDC16C36_V04_DF293/EDC16C36_V08_DF293

GETtheMANUALS.org

DF293 CONTINUED	

Check the conformity of the fuel used by running **TEST 9 Diesel fuel conformity check**.

If none of these checks reveal any faults:
– Replace the water detection sensor,
– clear the fault,
- start the engine and wait **at least 1 minute** to confirm the repair.

Note:
When the water level in the fuel filter unit is below the sensor's electrodes, some driving conditions (cornering, gradients) may result in water being detected (in fact, the sensor's off-centre position in the fuel filter unit, combined with the driving conditions, causes water to be detected).

AFTER REPAIR	Deal with any other faults. Clear the fault memory. Switch off the ignition until the end of the power-latch phase, and carry out a road test followed by a check with the **diagnostic tool**.

GETtheMANUALS.org

DF304 PRESENT OR STORED	EGR BY-PASS CIRCUIT CO: Open circuit CC.0: Short circuit to earth CC.1: Short circuit to + 12 V 1.DEF: Internal electronic fault

NOTES	**Conditions for applying the fault finding procedure to a stored fault:** The fault is declared present after: – the ignition is switched on, – and the relay is being actuated by command **AC103 EGR By-pass**.
	Special notes: Use bornier **Elé. 1681** for all operations on the engine management computer connectors.
	Use the **Vel Satis ph2, Espace IV ph2, Laguna II ph2** wiring diagram Technical Note.

CO	***NOTES***	None.

Check the EGR by-pass solenoid valve connections. check the engine management computer connections. If there is a repair method (see **Technical Note 6015A, Repairing electrical wiring, Wiring: Precautions for repair**), repair the wiring, otherwise replace it.
Measure the resistance of the EGR by-pass solenoid valve between the following connections: – Connection code **3TP**, – Connection code **3FB**, of component **1301**. If the resistance measured is not between **43 and 49 Ω at 25°C**, replace the EGR by-pass solenoid valve.
Check **the continuity** of the following connection: – Connection code **3TP** between components **1301 and 120**. Also check for **+ 12 V after relay** feed on the EGR by-pass solenoid valve connector. – Connection code **3FB** of component **1301**. If the connection or connections are faulty and there is a repair procedure (see **Technical Note 6015A, Electrical wiring repair, Wiring: Precautions for repair**), repair the wiring, otherwise replace it.
If the fault is still present, replace the EGR by-pass solenoid valve.

AFTER REPAIR	Deal with any other faults. Clear the fault memory. Switch off the ignition until the end of the power-latch phase, and carry out a road test followed by a check with the **diagnostic tool**.

EDC16C36_V04_DF304/EDC16C36_V08_DF304

GETtheMANUALS.org

DF304 CONTINUED 1	

CC.0	*NOTES*	None.

Check the EGR by-pass solenoid valve connections.
check the engine management computer connections.
If there is a repair method (see **Technical Note 6015A, Repairing electrical wiring, Wiring: Precautions for repair**), repair the wiring, otherwise replace it.

Measure the **resistance** of the EGR bypass solenoid valve between the following connections:
– Connection code **3TP**,
– Connection code **3FB**,
of component **1301**.
If the resistance measured is not between **43 and 49 Ω at 25°C**, replace the EGR by-pass solenoid valve.

Check **the continuity and insulation against earth** of the following connection:
– Connection code **3TP** between components **1301 and 120**.

Also check for **+ 12 V after relay feed** on the EGR by-pass solenoid valve connector.
– Connection code **3FB** of component **1301**.
If the connection or connections are faulty and there is a repair procedure (see **Technical Note 6015A, Electrical wiring repair, Wiring: Precautions for repair**), repair the wiring, otherwise replace it.

If the fault is still present, replace the EGR by-pass solenoid valve.

CC.1	*NOTES*	None.

Check the EGR by-pass solenoid valve connections.
check the engine management computer connections.
If there is a repair method (see **Technical Note 6015A, Repairing electrical wiring, Wiring: Precautions for repair**), repair the wiring, otherwise replace it.

AFTER REPAIR	Deal with any other faults. Clear the fault memory. Switch off the ignition until the end of the power-latch phase, and carry out a road test followed by a check with the **diagnostic tool**.

GETtheMANUALS.org

DF304 CONTINUED 2	

Measure the **resistance** of the EGR bypass solenoid valve between the following connections:
– Connection code **3TP**,
– Connection code **3FB**,
of component **1301**.
If the resistance measured is not between **43 and 49 Ω at 25°C**, replace the EGR by-pass solenoid valve.

Check the **continuity and insulation against + 12 V** of the following connection:
– Connection code **3TP** between components **1301 and 120**.
If the connection or connections are faulty and there is a repair procedure (see **Technical Note 6015A, Electrical wiring repair, Wiring: Precautions for repair**), repair the wiring, otherwise replace it.

If the fault is still present, replace the EGR by-pass solenoid valve.

1.DEF	*NOTES*	**Special notes:** This fault appears when the computer control section has overheated. A road test may be necessary to reveal this fault.

Check the EGR by-pass solenoid valve connections.
check the engine management computer connections.
If there is a repair method (see **Technical Note 6015A, Repairing electrical wiring, Wiring: Precautions for repair**), repair the wiring, otherwise replace it.

Measure the **resistance** of the EGR by-pass solenoid valve between the following connections:
– Connection code **3TP**,
– Connection code **3FB**,
of component **1301**.
If the resistance measured is not between **43 and 49 Ω at 25°C**, replace the EGR by-pass solenoid valve.

Check for **continuity and the absence of interference resistance** on the following connection:
– Connection code **3TP** between components **1301 and 120**.

Also check for **+ 12 V after relay feed** on the EGR by-pass solenoid valve connector.
– Connection code **3FB** of component **1301**.
If the connection or connections are faulty and there is a repair procedure (see **Technical Note 6015A, Electrical wiring repair, Wiring: Precautions for repair**), repair the wiring, otherwise replace it.

If the fault is still present, contact the Techline.

AFTER REPAIR	Deal with any other faults. Clear the fault memory. Switch off the ignition until the end of the power-latch phase, and carry out a road test followed by a check with the **diagnostic tool**.

GETtheMANUALS.org

DF308 PRESENT OR STORED	CLOGGED PARTICLE FILTER

NOTES	**Conditions for applying fault finding procedures to stored faults:** The fault is declared present after the engine is started or following a road test.
	Special notes: If the fault is present: – particle filter regeneration is inhibited, – the EGR function is inhibited, – the vehicle performance is reduced, – the **level 1** warning light is lit and a warning message (or light) is displayed on the instrument panel.
	Priorities when dealing with a number of faults: Firstly, deal with the following faults: **– DF315 Particle filter differential pressure sensor if it is present.** **– DF308 if DF315 is stored.** **– DF316 Particle filter diff* pressure sensor if it is present or stored.** **– DF226 Damper valve circuit if it is present or stored.** **– DF272 EGR valve control circuit if it is present or stored.** **– DF647 EGR valve position regulation if it is present or stored.** **– DF309 Particle filter downstream temperature sensor if it is present or stored.** **– DF310 Particle filter upstream temperature sensor if it is present or stored.** **– DF652 Turbine upstream temperature sensor circuit if it is present or stored.**

* diff: differential
*temp: temperature

AFTER REPAIR	Deal with any other faults. Clear the fault memory. Switch off the ignition until the end of the power-latch phase, and carry out a road test followed by a check with the **diagnostic tool**.

EDC16C36_V04_DF308/EDC16C36_V08_DF308

GETtheMANUALS.org

DF308 CONTINUED	

The fault appears if the weight of soot contained in the particle filter is more than 70 g.
– Check the sealing of the air inlet circuit (see **test 3 Turbocharged air inlet circuit check**).
– Check that there are no leaks or blockages in the exhaust pipe,
– Repair if necessary.
– Carry out an After-Sales regeneration. Run command **SC017 Particle filter regeneration** (see **interpretation of commands**).

Important: At the end of After-Sales regeneration, always replace the engine oil and the oil filter if the particle filter is being replaced.

Clear fault DF308 if it is Present or Stored.
If the fault is still present, contact the Techline.

AFTER REPAIR	Deal with any other faults. Clear the fault memory. Switch off the ignition until the end of the power-latch phase, and carry out a road test followed by a check with the **diagnostic tool**.

GETtheMANUALS.org

DF309 PRESENT OR STORED	PARTICLE FILTER DOWNSTREAM TEMP.* SENSOR CO.1: Open circuit or short circuit to +12 V CC.0: Short circuit to earth

NOTES	**Conditions for applying fault finding procedures to stored faults:** The fault becomes present if: – ignition is on (**CC.0**), – following a road test, engine warm (**CO.1**).
	IMPORTANT The particle filter downstream temperature sensor only measures temperatures greater than **50°C**.
	Use the **Vel Satis ph2, Espace IV ph2, Laguna II ph2** wiring diagram Technical Note.

CC.0	***NOTES***	None.

Check the condition of the particle filter downstream temperature sensor connector. Check the condition of the engine management computer connector. If one of the connectors is faulty and if there is a repair procedure (**see Technical Note 6015A, Electrical wiring repair, Wiring: Precautions for repair**), repair the connector, otherwise replace the wiring.
Check the **insulation** from **earth** of the following connections: – connection code **3TG**, – connection code **3XU**, between components **120** and **1288**. If the connection or connections are faulty and there is a repair procedure (see **Technical Note 6015A, Electrical wiring repair, Wiring: Precautions for repair**), repair the wiring, otherwise replace it.
If the fault is still present, replace the particle filter downstream temperature sensor.

*temp: temperature

AFTER REPAIR	Deal with any other faults. Clear the fault memory. Switch off the ignition until the end of the power-latch phase, and carry out a road test followed by a check with the **diagnostic tool**.

EDC16C36_V04_DF309/EDC16C36_V08_DF309

GETtheMANUALS.org

DF309 CONTINUED	

CO.1	***NOTES***	None.

Check the condition of the particle filter downstream temperature sensor connector. Check the condition of the engine management computer connector. If one of the connectors is faulty and there is a repair procedure (see **Technical Note 6015A, Electrical wiring repair, Wiring: Precautions for repair**), repair the connector, otherwise replace the wiring.
Check the **continuity and insulation** from **+ 12 V** of the following connections: – connection code **3TG**, – connection code **3XU**, between components **120** and **1288**. If the connection or connections are faulty and there is a repair procedure (see **Technical Note 6015A, Electrical wiring repair, Wiring: Precautions for repair**), repair the wiring, otherwise replace it.
If the fault is still present, replace the particle filter downstream temperature sensor.

AFTER REPAIR	Deal with any other faults. Clear the fault memory. Switch off the ignition until the end of the power-latch phase, and carry out a road test followed by a check with the **diagnostic tool**.

GETtheMANUALS.org

DF310 PRESENT OR STORED	PARTICLE FILTER UPSTREAM TEMP.* SENSOR CO.1: Open circuit or short circuit to +12 V CC.0: Short circuit to earth

NOTES	**Conditions for applying fault finding procedures to stored faults:** The fault becomes present if: – ignition is on (**CC.0**), – following a road test, engine warm (**CO.1**).
	Special notes: If the fault is present: – particle filter regeneration is inhibited, – the **level 1** warning light is lit, – the **OBD** warning light will come on after three consecutive driving cycles (start **+ 5 seconds** + switch off the ignition and wait **1 minute**),
	IMPORTANT **The particle filter upstream temperature sensor only measures temperatures above 50°C.**
	Use the **Vel Satis ph2, Espace IV ph2, Laguna II ph2** wiring diagram Technical Note.

CC.0	***NOTES***	None.

Check the condition of the particle filter upstream temperature sensor connector.
Check the condition of the engine management computer connector.
If one of the connectors is faulty and if there is a repair procedure (**see Technical Note 6015A, Electrical wiring repair, Wiring: Precautions for repair**), repair the connector, otherwise replace the wiring.

*temp: temperature

AFTER REPAIR	Deal with any other faults. Clear the fault memory. Switch off the ignition until the end of the power-latch phase, and carry out a road test followed by a check with the **diagnostic tool**.

EDC16C36_V04_DF310/EDC16C36_V08_DF310

GETtheMANUALS.org

DF310 CONTINUED	

Check the **insulation** from **earth** of the following connections:
– connection code **3XT,**
– connection code **3TD,**
between components **120** and **1287**.
If the connection or connections are faulty and there is a repair procedure (see **Technical Note 6015A, Electrical wiring repair, Wiring: Precautions for repair**), repair the wiring, otherwise replace it.

If the fault is still present, replace the particle filter upstream temperature sensor.

*temp: temperature

CO.1	*NOTES*	None.

Check the condition of the particle filter upstream temperature sensor connector.
Check the condition of the engine management computer connector.
If one of the connectors is faulty and there is a repair procedure (see **Technical Note 6015A, Electrical wiring repair, Wiring: Precautions for repair**), repair the connector, otherwise replace the wiring.

Check the **continuity and insulation** from **+ 12 V** of the following connections:
– connection code **3XT**,
– connection code **3TD**,
between components **120** and **1287**.
If the connection or connections are faulty and there is a repair procedure (see **Technical Note 6015A, Electrical wiring repair, Wiring: Precautions for repair**), repair the wiring, otherwise replace it.

If the fault is still present, replace the particle filter upstream temperature sensor.

AFTER REPAIR	Deal with any other faults. Clear the fault memory. Switch off the ignition until the end of the power-latch phase, and carry out a road test followed by a check with the **diagnostic tool**.

GETtheMANUALS.org

DF311 PRESENT OR STORED	FAILED REGENERATIONS LIMIT EXCEEDED

NOTES	**Conditions for applying fault finding procedures to stored faults:** The fault is declared present after the engine is started or following a road test.
	Special notes: If the fault is present, – the level 1 warning light is illuminated. – particle filter regenerations when driving are inhibited.
	Priorities when dealing with a number of faults: Firstly, deal with the following faults: **– DF308 Particle filter clogged if it is present or stored.** **– DF315 Particle filter diff.* pressure sensor if it is present or stored.** **– DF316 Particle filter diff* pressure sensor if it is present or stored.** **– DF055 Turbocharging pressure regulation circuit if it is present or stored.** **– DF309 Particle filter downstream temperature sensor if it is present or stored.** **– DF310 Particle filter upstream temperature sensor if it is present or stored.** **– DF652 Turbine upstream temperature sensor circuit if it is present or stored.** **– DF272 EGR valve control circuit if it is present or stored.** **– DF647 EGR valve position regulation if it is present or stored.**

AFTER REPAIR	Deal with any other faults. Clear the fault memory. Switch off the ignition until the end of the power-latch phase, and carry out a road test followed by a check with the **diagnostic tool**.

EDC16C36_V04_DF311/EDC16C36_V08_DF311

GETtheMANUALS.org

DF311 CONTINUED	

The fault appears after 11 failed regeneration attempts when driving.
– Check the sealing of the air inlet circuit (see **test 3 Turbocharged air inlet circuit check**).
– Check that there are no leaks or blockages in the exhaust pipe,
– Repair if necessary.
– Carry out an After-Sales regeneration.
– Follow the procedure for command **SC017 Particle filter regeneration** (see **Interpretation of commands**).

Important: At the end of After-Sales regeneration, always replace the engine oil and the oil filter if the particle filter is being replaced.

Explain to the customer the procedure for regeneration when driving to limit future garage repairs: see **PART D** in the interpretation of **DF312 Speed request**.

If the fault is still present, contact the Techline.

* diff: differential
*temp: temperature

AFTER REPAIR	Deal with any other faults. Clear the fault memory. Switch off the ignition until the end of the power-latch phase, and carry out a road test followed by a check with the **diagnostic tool**.

GETtheMANUALS.org

DF312 PRESENT OR STORED	SPEED REQUEST

NOTES	**Conditions for applying fault finding procedures to stored faults:** The fault is declared present after the engine is started or following a road test.
	Special notes: If the fault is present: – the special **regenerate particle filter** warning light is lit or a warning message is displayed on the instrument panel. – The vehicle needs to be driven specially to activate particle filter regeneration during driving.
	Priorities when dealing with a number of faults: Firstly, deal with the following faults: **– DF308 Particle filter clogged if it is present or stored.** **– DF311 Failed regenerations limit exceeded if it is present.** **– DF315 Particle filter differential pressure sensor if it is present or stored.**

The fault appears after 8 failed regeneration attempts when driving, or if the weight of soot in the particle filter is greater than 45 g.
PART A
The flow chart on the following page can be used to analyse the driving profile and causes of the activation of this fault.

* diff: differential

AFTER REPAIR	Deal with any other faults. Clear the fault memory. Switch off the ignition until the end of the power-latch phase, and carry out a road test followed by a check with the **diagnostic tool**.

EDC16C36_V04_DF312/EDC16C36_V08_DF312

GETtheMANUALS.org

DF312 CONTINUED 1

Repair request with **DF312** present or stored ONLY

↓

Read the information from the sub-function **Particle filter histo*: PR784 to PR793 DF312 No. 1 to No. 10 records**

↓

Are **PR784 to PR793** all equal to **0 miles (0 km)**? — YES → Contact the Techline

NO ↓

Among these parameters (**PR784 to PR793**):
– Find the parameter with the highest mileage: it is the **Mileage of the last DF312**.
– Note the parameter index on the order of repair with the relevant mileage value.
E.g.: **PR787 = 2794 miles (4657 Km)**

↓

Read the information in the **Particle filter histo*** sub-function:
PR794 to PR803 Stored regeneration failures No. 1 to No. 10.

↓

Does at least one of parameters **PR794 to PR803 = 19659 miles (32766 Km)**? — YES → Contact the Techline

NO ↓

Identify the distance(s) from the values of **parameters PR794 to PR803 Stored regeneration failures No. 1 to No. 10**, included between the **Mileage of the last DF312** and the **Mileage of the last DF312 - 120 miles (200 km)**. These are the **mileages of the last failures**.
Example: **2674 miles (4457 km) < PR801 = 2760 miles (4600 km) < 2794 miles (4657 km)**

↓

(A)

* histo: history

AFTER REPAIR	Deal with any other faults. Clear the fault memory. Switch off the ignition until the end of the power-latch phase, and carry out a road test followed by a check with the **diagnostic tool**.

GETtheMANUALS.org

DF312 CONTINUED 2	

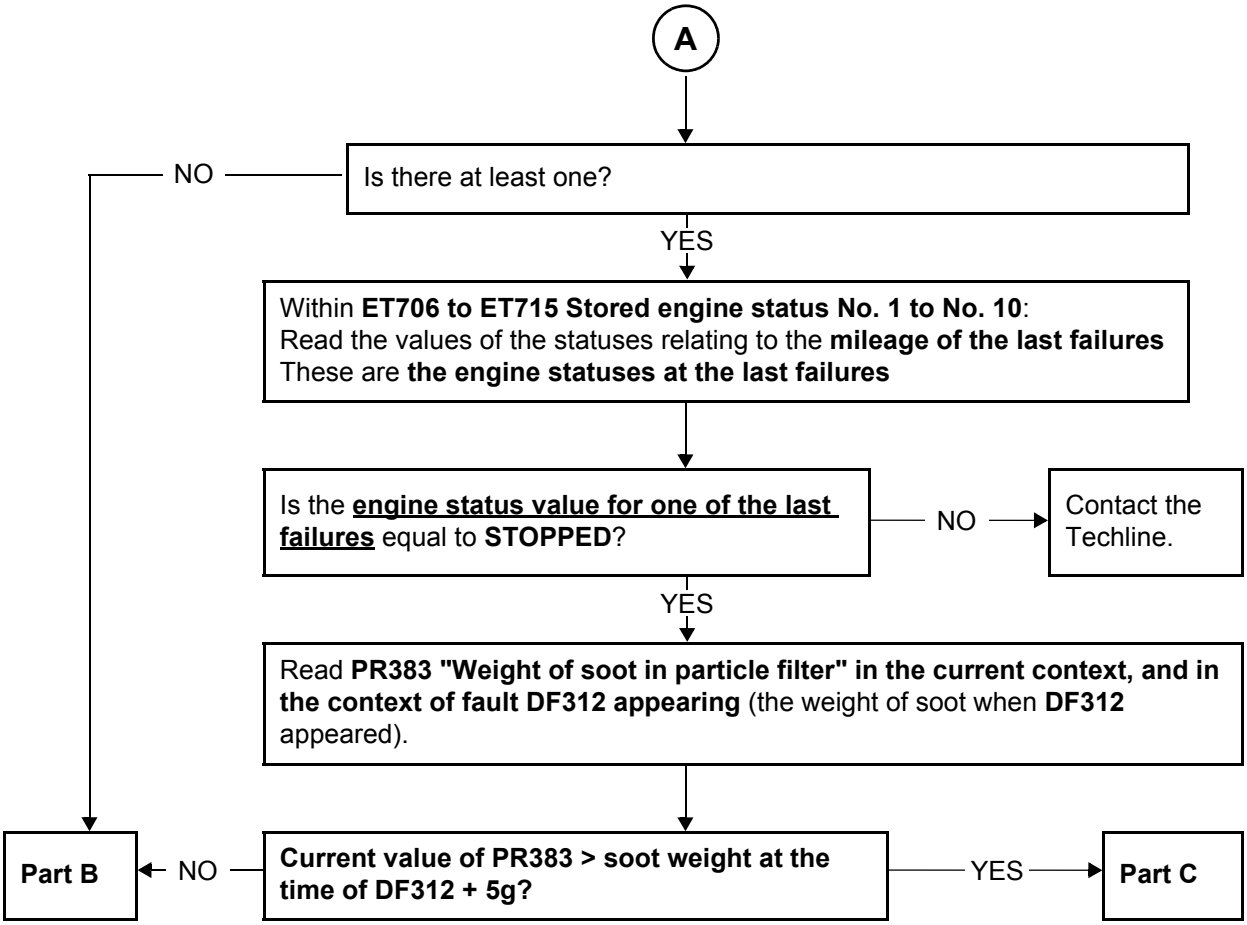

AFTER REPAIR	Deal with any other faults. Clear the fault memory. Switch off the ignition until the end of the power-latch phase, and carry out a road test followed by a check with the **diagnostic tool**.

GETtheMANUALS.org

DF312 CONTINUED 3	

PART B

1. No particle filter regeneration.

2. Write on the repair order the parameter and status relating to the last failure:

Mileage of last DF312
Mileage of last failures
Engine statuses of last failures
E.g.: **PR787 = 2794 miles (4657 km); PR801 = 2760 miles (4600 km); engine status = STOPPED**

3. Interpretation of the values written on the repair order by the service advisor for the customer:

Before the last time the **Particle filter warning light or message** came on (appeared at the **Mileage of the last DF312**), the customer had not respected the driving recommendations: the failure that occurred at the **Mileage of the last failure** is due to the engine being switched off.

4. Explain to the customer the procedure to turn off the warning light, making use of the parameters noted in the repair order: see PART D.

PART C

Check the sealing of the air inlet circuit (see **test 3 Turbocharged air inlet circuit check**).
Check that there are no leaks or blockages in the exhaust pipe,
Repair if necessary.
Carry out an After-Sales regeneration with the **approval from the Techline**.
Follow the procedure for command **SC017 Particle filter regeneration** (see **Interpretation of commands**).
Important: At the end of After-Sales regeneration, always replace the engine oil and the oil filter if the particle filter is being replaced.

Explain to the customer the procedure for regeneration when driving to avoid unnecessary repairs: see **PART D**.

AFTER REPAIR	Deal with any other faults. Clear the fault memory. Switch off the ignition until the end of the power-latch phase, and carry out a road test followed by a check with the **diagnostic tool**.

GETtheMANUALS.org

DF312 CONTINUED 4	

PART D
Procedure to switch off the **Particle filter** message or warning light on the instrument panel

Certain driving styles may trigger the warning light or the "**particle filter**" message, activating fault **DF312 Speed request**.
The fault appears after 8 failed regeneration attempts when driving, or if the weight of soot in the particle filter is greater than 45 g,

The customer must carry out a specific driving operation (cf. vehicle user manual) that consists of:
When the engine is warm, drive at a speed greater than **48 mph (80 km/h)** for **2 minutes** to trigger the regeneration procedure.

Keep driving at an average speed of **48 mph (80 Km/h)**, until the "**particle filter**" message or warning light on the instrument panel turns off. In order for the procedure to succeed, it is necessary to drive without stopping the engine or leaving the engine running at idle speed for an extended period of time. The regeneration time depends on the vehicle and driving conditions but should last for **20 minutes maximum**.

If regeneration when driving fails (the warning light has not switched off or the service warning light has come on), carry out a particle filter regeneration in the Renault dealership. Run command **SC017 Particle filter regeneration** (see **Interpretation of commands**).

If the fault is still present, contact the Techline.

AFTER REPAIR	Deal with any other faults. Clear the fault memory. Switch off the ignition until the end of the power-latch phase, and carry out a road test followed by a check with the **diagnostic tool**.

GETtheMANUALS.org

DF315 PRESENT OR STORED	PARTICLE FILTER DIFF* PRESSURE SENSOR CO: Open circuit CO.1: Open circuit or short circuit to + 12 volts CC.0: Short circuit to earth

NOTES	**Conditions for applying fault finding procedures to stored faults:** The fault is declared present after the engine is started or following a road test.
	Special notes: **If the fault is present:** – the **level 1** warning light is lit, – the **OBD** warning light will come on after three consecutive driving cycles (start **+ 5 seconds** + switch off the ignition and wait 1 minute), – the particle filter fault finding procedure is inhibited, – particle filter regeneration is inhibited.
	Priorities when dealing with a number of faults: **DF315** if it is present. **DF308 Particle filter clogged** if **DF315** is stored and **DF308 Particle filter clogged** present. **DF011 Sensor supply voltage no. 1 if it is present or stored.**
	Use the **Vel Satis ph2, Espace IV ph2, Laguna II ph2** wiring diagram Technical Note.

* diff: differential

AFTER REPAIR	Deal with any other faults. Clear the fault memory. Switch off the ignition until the end of the power-latch phase, and carry out a road test followed by a check with the **diagnostic tool**.

EDC16C36_V04_DF315/EDC16C36_V08_DF315

GETtheMANUALS.org

DF315 CONTINUED 1	

CC.1	*NOTES*	None.

Check the condition of the differential pressure sensor connector. Check the condition of the engine management computer connector. If one of the connectors is faulty and if there is a repair procedure (**see Technical Note 6015A, Electrical wiring repair, Wiring: Precautions for repair**), repair the connector, otherwise replace the wiring.
Check the **insulation** from **+ 12 V** of the following connections: – connection code **3TL**, – connection code **3TM**, between components **120** and **1290**. If the connection or connections are faulty and there is a repair procedure (see **Technical Note 6015A, Electrical wiring repair, Wiring: Precautions for repair**), repair the wiring, otherwise replace it.
If the fault is still present, replace the differential pressure sensor.

AFTER REPAIR	Deal with any other faults. Clear the fault memory. Switch off the ignition until the end of the power-latch phase, and carry out a road test followed by a check with the **diagnostic tool**.

GETtheMANUALS.org

DF315 CONTINUED 2	

CO.0 **CO**	***NOTES***	None.

Check the condition of the differential pressure sensor connector (see **Wiring diagram Technical Note, Vel Satis ph2, Espace IV ph2, Laguna II ph2, component code 1290).** Check the condition of the engine management computer connector (see **Wiring Diagram Technical Note, Vel Satis ph2, Espace IV ph2, Laguna II ph2, component code 120).** If one of the connectors is faulty and there is a repair procedure (see **Technical Note 6015A, Electrical wiring repair, Wiring: Precautions for repair**), repair the connector, otherwise replace the wiring.
Check **the continuity and insulation** from earth of the following connections: – connection code **3TL,** – connection code **3TM,** between components **120** and **1290**. If the connection or connections are faulty and there is a repair procedure (see **Technical Note 6015A, Electrical wiring repair, Wiring: Precautions for repair**), repair the wiring, otherwise replace it.
If the fault is still present, replace the differential pressure sensor.

AFTER REPAIR	Deal with any other faults. Clear the fault memory. Switch off the ignition until the end of the power-latch phase, and carry out a road test followed by a check with the **diagnostic tool**.

GETtheMANUALS.org

DF316 PRESENT OR STORED	PARTICLE FILTER DIFF* PRESSURE 1.DEF: Signal incoherent 2.DEF: Below minimum threshold 3.DEF: Values out of range

NOTES	**Conditions for applying the fault finding procedure to a stored fault:** The fault is declared present after: – the ignition is switched on. – the engine is started.
	Special notes: If the fault is present: – the particle filter fault finding procedure is inhibited, – the **level 1** warning light is illuminated. Use bornier **Ele. 1681** for all operations on the engine management computer connector.
	Use the **Vel Satis ph2, Espace IV ph2, Laguna II ph2** wiring diagram Technical Note.

Check the condition of the pressure pipes on the differential pressure sensor. Check that they are sealed and in the correct position. Replace if necessary.
Check the condition of the connectors on the differential pressure sensor and the injection computer. If there is a repair method (see **Technical Note 6015A, Repairing electrical wiring, Wiring: Precautions for repair**), repair the wiring, otherwise replace it.
Check the **continuity, insulation and the absence of interference resistance** on the following connections: – Connection code **3AAQ**, – Connection code **3TM**, – Connection code **3TL**, between components **1290 and 120**. If the connection or connections are faulty and there is a repair procedure (see **Technical Note 6015A, Electrical wiring repair, Wiring: Precautions for repair**), repair the wiring, otherwise replace it.
If the fault is still present, replace the differential pressure sensor.

* diff: differential

AFTER REPAIR	Deal with any other faults. Clear the fault memory. Switch off the ignition until the end of the power-latch phase, and carry out a road test followed by a check with the **diagnostic tool**.

EDC16C36_V04_DF316/EDC16C36_V08_DF316

GETtheMANUALS.org

DF502 PRESENT OR STORED	CRUISE CONTROL OR SPEED LIMITER BUTTON 1.DEF: Cruise control/Speed limiter ON/OFF* buttons inconsistent.

NOTES	**Conditions for applying the fault finding procedure to a stored fault:** If the fault is declared present after: – a road test with activation of the cruise control/speed limiter function, – the engine is started.
	Special notes: If the fault is present, the cruise control/speed limiter is switched off. Use bornier **Elé. 1681** for any operations on the injection computer connectors.
	Use the **Vel Satis ph2, Espace IV ph2, Laguna II ph2** wiring diagram Technical Note.

Check the connections of the Cruise control/Speed limiter on/off button:
In the **speed limiter position**, check the continuity between:
– Connection codes **AP10** and **3PD** of component **1081**.

In the **cruise control position**, check the continuity between:
– Connection codes **AP10** and **3FX** of component **1081**.

Disconnect the main switch and with it in the **rest position**, check the **insulation** between:
– Connection codes **AP10** and **3FX**, of component **1081**.
– Connection codes **AP10** and **3PD** of component **1081**.

If these checks are not in order, replace the switch.

Check the **continuity, insulation and the absence of interference resistance** on the following connections:
– Connection code **3FX**,
– Connection code **3PD**,
between components **1081 and 120**.
Check for **+ 12 V** after ignition feed on the cruise control/speed limiter button connector.
– Connection code **AP10** of component **1081**.

Check the injection computer connections.
If the connection or connections are faulty and there is a repair procedure (see **Technical Note 6015A, Electrical wiring repair, Wiring: Precautions for repair**), repair the wiring, otherwise replace it.

If the fault is still present, replace the cruise control/speed limiter on/off button.

*ON/OFF: On/Off button

AFTER REPAIR	Deal with any other faults. Clear the fault memory. Switch off the ignition until the end of the power-latch phase, and carry out a road test followed by a check with the **diagnostic tool**.

EDC16C36_V04_DF502/EDC16C36_V08_DF502

GETtheMANUALS.org

DF502 CONTINUED	

Check the **continuity, insulation and the absence of interference resistance** on the following connections:
– Connection code **3FX**,
– Connection code **3PD**,
between components **1081** and **120.**
Check for **+ 12 V** after ignition feed on the cruise control/speed limiter button connector.
– Connection code **AP10** of component **1081**

Check the injection computer connections.
If the connection or connections are faulty and there is a repair procedure (see **Technical Note 6015A, Electrical wiring repair, Wiring: Precautions for repair**), repair the wiring, otherwise replace it.

If the fault is still present, replace the cruise control/speed limiter on/off button.

AFTER REPAIR	Deal with any other faults. Clear the fault memory. Switch off the ignition until the end of the power-latch phase, and carry out a road test followed by a check with the **diagnostic tool**.

GETtheMANUALS.org

DF504 PRESENT OR STORED	AUTOMATIC TRANSMISSION 1.DEF: Multiplex line connection fault

NOTES	**Conditions for applying the fault finding procedure to a stored fault:** If the fault is declared present after: – the ignition is switched on, – a road test
	Special notes: If the fault is present, the **European On Board Diagnostic** warning light is on.
	Use the **Vel Satis ph2, Espace IV ph2, Laguna II ph2** wiring diagram Technical Note.

Carry out a full check on the multiplex network (see **88B, Multiplexing, Interpretation of faults**) Repair if necessary.
If the fault is still present, run fault finding on the automatic transmission system (see **23A, Automatic transmission**). Check the **insulation** against earth and **+ 12 V** of the following connections: – Connection code **3MS**, – Connection code **3MT**, between components **119** and **120**. If the connection or connections are faulty and there is a repair procedure (see **Technical Note 6015A, Electrical wiring repair, Wiring: Precautions for repair**), repair the wiring, otherwise replace it.
If the fault is still present, contact the Techline.

AFTER REPAIR	Deal with any other faults. Clear the fault memory. Switch off the ignition until the end of the power-latch phase, and carry out a road test followed by a check with the **diagnostic tool**.

EDC16C36_V04_DF504/EDC16C36_V08_DF504

GETtheMANUALS.org

DF643 PRESENT OR STORED	RAIL PRESSURE REGULATOR CIRCUIT CO: Open circuit CC.0: Short circuit to earth CC.1: Short circuit to + 12 V 1.DEF: Internal electronic fault

NOTES	**Conditions for applying the fault finding procedure to a stored fault:** The fault reappears after: – the ignition is switched on, – the regulator is actuated by command **AC011 Rail pressure regulator**.
	Special notes: If the fault is present: – the engine stops, – performance is reduced, – regulation with open loop for fuel flow, – the **level 2** warning light is lit. Use bornier **Elé. 1681** for all operations on the engine management computer connectors.
	Use the **Vel Satis ph2, Espace IV ph2, Laguna II ph2** wiring diagram Technical Note.

Check the pressure regulator connectors.
check the engine management computer connections.
If there is a repair method (see **Technical Note 6015A, Repairing electrical wiring, Wiring: Precautions for repair**), repair the wiring, otherwise replace it.
Check the low pressure circuit.
Repair if necessary.

Check **the continuity and insulation against earth and against +12 V** on the following connection:
– Connection code **3HI** between components **1105 and 120**.

Also check for **+ 12 V after relay** feed on the pressure regulator connector.
– Connection code **3FB** of component **1105**.
If the connection or connections are faulty and if there is a repair method (see Technical Note 6015A, Electrical wiring repair, Wiring: Precautions for repair), repair the wiring, otherwise replace the wiring.

Measure the **resistance** of the pressure regulator between the following connections**:**
– Connection code **3FB**,
– Connection code **3HI**,
of component **1105**.
If the regulator resistance value is not around **3 Ω ± 0.**1 Ω **at 20°C**, replace the pressure regulator.

If the fault is still present, contact the Techline.

AFTER REPAIR	Deal with any other faults. Clear the fault memory. Switch off the ignition until the end of the power-latch phase, and carry out a road test followed by a check with the **diagnostic tool**.

EDC16C36_V04_DF643/EDC16C36_V08_DF643

GETtheMANUALS.org

DF647 PRESENT OR STORED	EGR VALVE POSITION REGULATION 1.DEF: Inconsistent EGR 1 offset 2.DEF: Offset too high: valve clogged, stuck open or abnormal 3.DEF: Inconsistent EGR 3 offset 4.DEF: Above maximum threshold 5.DEF: Valve jammed closed

NOTES	**Conditions for applying the fault finding procedure to a stored fault:** The fault is declared present after: – the engine is started, – a road test.
	Special notes: If the fault is present: – the **level 1** warning light is lit for **1.DEF**, **3.DEF** and **5.DEF**, – the **European On Board Diagnostic** warning light is lit for **2.DEF** and **4.DEF**, – the EGR function and turbocharging are inhibited by the engine management computer, – engine torque is limited. Use bornier **Ele. 1681** for all operations on the engine management computer connector.
	If faults **DF647** and **DF038 Computer** are displayed at the same time, deal with **DF038 Computer** first. Then check that the **EGR valve** is open during idling to make sure that the programming has not been lost. If the valve does not open, carry out the programming phase.
	Priorities when dealing with a number of faults: **– DF209 EGR valve position sensor circuit,** **– DF046 Battery voltage,** **– DF012 Sensor supply voltage no. 2,** **– DF272 EGR valve control circuit,** if they are present or stored.
	For EGR valves with a flat connector, it is not possible to check the sensor resistance.
	Use the **Vel Satis ph2, Espace IV ph2, Laguna II ph2** wiring diagram Technical Note.

AFTER REPAIR	Deal with any other faults. Clear the fault memory. Switch off the ignition until the end of the power-latch phase, and carry out a road test followed by a check with the **diagnostic tool**.

EDC16C36_V04_DF647/EDC16C36_V08_DF647

GETtheMANUALS.org

DF647 CONTINUED	

Check the condition of the **EGR valve** connector, component code **1460**.
Check the condition of the engine management computer connector, component code **120**.
If the connectors are faulty and if there is a repair procedure (see **Technical Note 6015A, Repairing electrical wiring, Wiring: Precautions for repair),** repair the connector, otherwise replace the wiring.

Check the continuity and absence of interference resistance of the following connections:
– Connection code **3GC** between components **1460** and **120**,
– Connection code **3JM** between components **1460** and **120**,
– Connection code **3EL** between components **1460** and **120**.
If the connection or connections are faulty and there is a repair procedure (see **Technical Note 6015A, Electrical wiring repair, Wiring: Precautions for repair**), repair the wiring, otherwise replace it.

EGR valve with a square connector:
Measure the **resistance** of the EGR valve between the following connections:
– Connection code **3JM** of component **1460**,
– Connection code **3GC** of component **1460**.
Replace the valve if the resistance is not between: **3.9 kΩ < X < 9.1 kΩ**.

EGR valve with a flat connector (with adapter attachment):
Replace the EGR valve.

When replacing the EGR valve, run command **SC036 Reinitialise programming** and select **EGR valve** to reinitialise the EGR valve offsets (see **Replacement of components**).

AFTER REPAIR	Deal with any other faults. Clear the fault memory. Switch off the ignition until the end of the power-latch phase, and carry out a road test followed by a check with the **diagnostic tool**.

GETtheMANUALS.org

DF652 PRESENT OR STORED	TURBINE UPSTREAM TEMPERATURE SENSOR CIRCUIT CC.O: Short circuit to earth CO.1: Open circuit or short circuit to +12 V

NOTES	**Conditions for applying fault finding procedures to stored faults:** The fault becomes present with the ignition on **(CC.0)** or after a road test, with the engine warm **(CO.1)**.
	Special notes: **If the fault is present:** – particle filter regeneration is inhibited, – the vehicle performance is reduced, – temperature regulation before the particle filter is inhibited.
	Use the **Vel Satis ph2, Espace IV ph2, Laguna II ph2** wiring diagram Technical Note.

CC.0	***NOTES***	None.

Check the condition of the turbine upstream temperature sensor connector. Check the condition of the engine management computer connector. If one of the connectors is faulty and there is a repair procedure (see **Technical Note 6015A, Electrical wiring repair, Wiring: Precautions for repair**), repair the connector, otherwise replace the wiring.
Check the **insulation** from earth of the following connections: – connection code **3ABS**, – connection code **3ABT**, between components **120** and **1589**. If the connection or connections are faulty and there is a repair procedure (see **Technical Note 6015A, Electrical wiring repair, Wiring: Precautions for repair**), repair the wiring, otherwise replace it.
If the fault is still present, replace the turbine upstream temperature sensor.

AFTER REPAIR	Deal with any other faults. Clear the fault memory. Switch off the ignition until the end of the power-latch phase, and carry out a road test followed by a check with the **diagnostic tool**.

EDC16C36_V04_DF652/EDC16C36_V08_DF652

GETtheMANUALS.org

DF652 CONTINUED	

CO.1	*NOTES*	None.

Check the condition of the turbine upstream temperature sensor connector. Check the condition of the engine management computer connector. If one of the connectors is faulty and if there is a repair procedure (**see Technical Note 6015A, Electrical wiring repair, Wiring: Precautions for repair**), repair the connector, otherwise replace the wiring.
Check the **continuity and insulation** from **+ 12 V** of the following connections: – connection code **3ABS**, – connection code **3ABT**, between components **120** and **1589**. If the connection or connections are faulty and there is a repair procedure (see **Technical Note 6015A, Electrical wiring repair, Wiring: Precautions for repair**), repair the wiring, otherwise replace it.
If the fault is still present, replace the turbine upstream temperature sensor.

AFTER REPAIR	Deal with any other faults. Clear the fault memory. Switch off the ignition until the end of the power-latch phase, and carry out a road test followed by a check with the **diagnostic tool**.

GETtheMANUALS.org

DF890 PRESENT OR STORED	MOVEMENT DURING PARTICLE FILTER REGENER.*

NOTES	**Conditions for applying fault finding procedures to stored faults:** The fault becomes present during an After-Sales regeneration carried out using the **diagnostic tool** at a speed above zero.
	Special notes: If the fault is present: – regeneration in progress is stopped.

IMPORTANT
The fault is present because the vehicle was driven while the After-Sales regeneration was in progress. The vehicle must remain stationary throughout regeneration.

DO NOT DRIVE THE VEHICLE DURING AFTER-SALES REGENERATION.
CHECK THAT THE VEHICLE IS CORRECTLY IMMOBILISED.

– switch off the ignition and wait for the **diagnostic tool** message (maximum time **8 minutes**): **Communication lost with computer: EDC16C36, check the tool connection and computer supply**.
– switch on the ignition,
– establish dialogue with the injection computer,
– clear the faults from the computer memory.
– carry out another After-Sales regeneration,
– run command **SC017 Particle filter regeneration** and follow the procedure (see **Interpretation of commands**).

If the fault is still present, contact the Techline.

* regener: regeneration

AFTER REPAIR	Deal with any other faults. Clear the fault memory. Switch off the ignition until the end of the power-latch phase, and carry out a road test followed by a check with the **diagnostic tool**.

EDC16C36_V04_DF890/EDC16C36_V08_DF890

GETtheMANUALS.org

DF891 PRESENT OR STORED	GROUP 1 INJECTORS FEED 1.DEF: Faulty connections. 2.DEF: Short circuit to earth or short circuit to + 12 V.

NOTES	**Conditions for applying the fault finding procedure to a stored fault:** If the fault becomes present after: – the ignition is switched on, – the engine is started.
	Priority when dealing with a number of faults: Deal with faults **DF026 Cylinder 1 injector control circuit, DF027 Cylinder 2 injector control circuit, DF028 Cylinder 3 injector control circuit and DF029 Cylinder 4 injector control circuit** first if they are present or stored.
	Special notes: If the fault is present: – the **level 2** warning light will be lit, – the engine stops. Use bornier **Elé. 1681** for any operations on the engine management computer connectors.
	Use the **Vel Satis ph2, Espace IV ph2, Laguna II ph2** wiring diagram Technical Note.

AFTER REPAIR	Deal with any other faults. Clear the fault memory. Switch off the ignition until the end of the power-latch phase, and carry out a road test followed by a check with the **diagnostic tool**.

EDC16C36_V04_DF891/EDC16C36_V08_DF891

GETtheMANUALS.org

DF891 CONTINUED	

Check the injector connections.
check the engine management computer connections.
If there is a repair method (see **Technical Note 6015A, Repairing electrical wiring, Wiring: Precautions for repair**), repair the wiring, otherwise replace it.

Check the **continuity** and **insulation** of the following connections:
– Connection code **3KW**,
– Connection code **3CR**,
between components **193 and 120**.
– Connection code **3KX**,
– Connection code **3CS**,
between components **194 and 120**.
– Connection code **3KY**,
– Connection code **3CT**,
between components **195 and 120**.
– Connection code **3KZ**,
– Connection code **3CU**,
between components **196 and 120**.
If the connection or connections are faulty and there is a repair procedure (see **Technical Note 6015A, Electrical wiring repair, Wiring: Precautions for repair**), repair the wiring, otherwise replace it.
If the fault is still present, contact the Techline.

AFTER REPAIR	Deal with any other faults. Clear the fault memory. Switch off the ignition until the end of the power-latch phase, and carry out a road test followed by a check with the **diagnostic tool**.

GETtheMANUALS.org

DF892 PRESENT OR STORED	GROUP 2 INJECTORS FEED 1.DEF: Faulty connections 2.DEF: Short circuit to earth or short circuit to + 12 V

NOTES	**Conditions for applying the fault finding procedure to a stored fault:** If the fault becomes present after: – the ignition is switched on, – the engine is started.
	Priority when dealing with a number of faults: Deal with faults **DF026 Cylinder 1 injector control circuit, DF027 Cylinder 2 injector control circuit, DF028 Cylinder 3 injector control circuit and DF029 Cylinder 4 injector control circuit** first if they are present or stored.
	Special notes: If the fault is present: – the **level 2** warning light will be lit, – the engine stops. Use bornier Elé. 1681 for all operations on the engine management computer connectors.
	Use the **Vel Satis ph2, Espace IV ph2, Laguna II ph2** wiring diagram Technical Note.

AFTER REPAIR	Deal with any other faults. Clear the fault memory. Switch off the ignition until the end of the power-latch phase, and carry out a road test followed by a check with the **diagnostic tool**.

EDC16C36_V04_DF892/EDC16C36_V08_DF892

GETtheMANUALS.org

DF892 CONTINUED	

Check the injector connections. check the engine management computer connections. If there is a repair method (see **Technical Note 6015A, Repairing electrical wiring, Wiring: Precautions for repair**), repair the wiring, otherwise replace it.
Check the **continuity** and **insulation** of the following connections: – Connection code **3KW**, – Connection code **3CR**, between components **193 and 120**. – Connection code **3KX**, – Connection code **3CS**, between components **194 and 120**. – Connection code **3KY**, – Connection code **3CT**, between components **195 and 120**. – Connection code **3KZ**, – Connection code **3CU**, between components **196 and 120**. If the connection or connections are faulty and there is a repair procedure (see **Technical Note 6015A, Electrical wiring repair, Wiring: Precautions for repair**), repair the wiring, otherwise replace it.
If the fault is still present, contact the Techline.

AFTER REPAIR	Deal with any other faults. Clear the fault memory. Switch off the ignition until the end of the power-latch phase, and carry out a road test followed by a check with the **diagnostic tool**.

GETtheMANUALS.org

DF899 PRESENT OR STORED	REGENERATION TEMPERATURE LIMIT EXCEEDED

NOTES	**Conditions for applying the fault finding procedure to a stored fault:** The fault is declared present during an After-Sales regeneration, if the temperature threshold is exceeded.
	Special notes: If the fault is present: – regeneration in progress is stopped.

Carry out particle filter replacement:
– Switch on the ignition.
– establish dialogue with the injection computer,
– run command **SC036 Reinitialise programming**,
– select **After particle filter replacement** as the operation type, then follow the instructions given by the **diagnostic tool**,
– switch off the ignition.
– wait for the diagnostic tool message (maximum time **8 minutes**): **Communication lost with computer: EDC16C36, check the tool connection and computer supply**, and switch the ignition back on.
– clear the faults from the computer memory (this operation must be carried out within **3 minutes** of the ignition being switched on).

If the fault is still present, contact the Techline.

AFTER REPAIR	Deal with any other faults. Clear the fault memory. Switch off the ignition until the end of the power-latch phase, and carry out a road test followed by a check with the **diagnostic tool**.

EDC16C36_V04_DF899/EDC16C36_V08_DF899

GETtheMANUALS.org

DF953 PRESENT OR STORED	PARTICLE FILTER ABSENT

NOTES	**Conditions for applying fault finding procedures to stored faults:** The fault is declared present after the engine is started or following a road test.
	Special notes: **If the fault is present:** – particle filter regeneration is inhibited, – blue/white smoke and black particles coming from the exhaust, – the **OBD** warning light will come on after three consecutive driving cycles (starting **+ 5 seconds**, switch off the ignition and wait **40 seconds**).
	Priorities when dealing with a number of faults: **DF315 Particle filter diff.* pressure sensor if present or stored**
	IMPORTANT In the long term, this fault may lead to premature wear and a greater risk of turbocharger failure.
	Use the Wiring diagram Technical Note for **Laguna II ph2, Vel satis ph2, Espace IV ph2**.

Check the condition of the differential pressure sensor connector.
Check the condition of the engine management computer connector.
If one of the connectors is faulty and if there is a repair procedure (**see Technical Note 6015A, Electrical wiring repair, Wiring: Precautions for repair**), repair the connector, otherwise replace the wiring.

* diff: differential

AFTER REPAIR	Deal with any other faults. Clear the fault memory. Switch off the ignition until the end of the power-latch phase, and carry out a road test followed by a check with the **diagnostic tool**.

EDC16C36_V04_DF953/EDC16C36_V08_DF953

GETtheMANUALS.org

DF953 CONTINUED	

Check the particle filter is present.
If it is present,
Visually check that the particle filter is in good condition by positioning the vehicle on a lift:
– not damaged (no abnormal welds, if necessary compare it with another vehicle fitted with particle filter),
– if there are After-Sales sleeves, as a result of a previous operation, check that the particle filter does not lose its contents when being removed.
If the particle filter is not working correctly or is absent:
– Replace the particle filter.
– Switch on the ignition.
– establish dialogue with the injection computer,
– run command **SC036 Reinitialise programming**,
– select **After particle filter replacement** as the operation type, then follow the instructions given by the **diagnostic tool**,
– switch off the ignition.
– wait for the **diagnostic tool** message (maximum time **8 minutes**): **Communication lost with computer: EDC16C36, check the tool connection and computer supply** before switching the ignition back on,
– clear the faults from the computer memory (this operation must be carried out within **3 minutes** of the ignition being switched on).
If the fault is still present, contact the Techline.

AFTER REPAIR	Deal with any other faults. Clear the fault memory. Switch off the ignition until the end of the power-latch phase, and carry out a road test followed by a check with the **diagnostic tool**.

GETtheMANUALS.org

DF967 PRESENT OR STORED	RICHNESS RATIO SENSOR CIRCUIT CC.0: Short circuit to earth CC.1: Short circuit to + 12 V CO: Open circuit 1.DEF: Abnormal voltage 2.DEF: Below minimum threshold 3.DEF: Above maximum threshold

NOTES	**Conditions for applying the fault finding procedure to a stored fault:** The fault is declared present after: – the ignition is switched on, – a road test.
	Special notes: Use bornier Elé.1681 for any operations on the injection computer connectors.
	Use the **Vel Satis ph2, Espace IV ph2, Laguna II ph2** wiring diagram Technical Note.

Check the injection computer connections.
Check the richness ratio sensor connections.
If there is a repair method (see **Technical Note 6015A, Repairing electrical wiring, Wiring: Precautions for repair**), repair the wiring, otherwise replace it.

Check the **continuity, insulation and absence of interference resistance** on the following connections:
– Connection code **3AAS**,
– Connection code **3AAT**,
– Connection code **3AAU**,
– Connection code **3AAV**,
– Connection code **3AAW**,
between components **1587 and 120**.

Check for **+ 12 V** on the richness ratio sensor connector.
– Connection code **3FB** of component **1587**.

If the connection or connections are faulty and there is a repair procedure (see **Technical Note 6015A, Electrical wiring repair, Wiring: Precautions for repair**), repair the wiring, otherwise replace it.

If the fault is still present, contact the Techline.

AFTER REPAIR	Deal with any other faults. Clear the fault memory. Switch off the ignition until the end of the power-latch phase, and carry out a road test followed by a check with the **diagnostic tool**.

EDC16C36_V04_DF967/EDC16C36_V08_DF967

GETtheMANUALS.org

DF970 PRESENT OR STORED	RICHNESS RATIO SENSOR HEATING CIRCUIT CC.0: Short circuit to earth CC.1: Short circuit to + 12 V CO: Open circuit 1.DEF: Internal electrical fault 2.DEF: Below minimum threshold 3.DEF: Above maximum threshold

NOTES	**Conditions for applying the fault finding procedure to a stored fault:** The fault is declared present after: – the ignition is switched on, – a road test, – the relay is actuated by command **AC231 Richness ratio sensor heating**.
	Special notes: Use bornier **Elé. 1681** for any operations on the injection computer connectors.
	Use the **Vel Satis ph2, Espace IV ph2, Laguna II ph2** wiring diagram Technical Note.

Check the injection computer connections.
Check the richness ratio sensor connections.
If there is a repair method (see **Technical Note 6015A, Repairing electrical wiring, Wiring: Precautions for repair**), repair the wiring, otherwise replace it.

Check the **continuity, insulation and absence of interference resistance** on the following connections:
– Connection code **3AAS**,
– Connection code **3AAT**,
– Connection code **3AAU**,
– Connection code **3AAV**,
– Connection code **3AAW**,
between components **1587 and 120**.

Check for **+ 12 V** on the richness ratio sensor connector.
– Connection code **3FB** of component **1587**.

If the connection or connections are faulty and there is a repair procedure (see **Technical Note 6015A, Electrical wiring repair, Wiring: Precautions for repair**), repair the wiring, otherwise replace it.

If the fault is still present, contact the Techline.

AFTER REPAIR	Deal with any other faults. Clear the fault memory. Switch off the ignition until the end of the power-latch phase, and carry out a road test followed by a check with the **diagnostic tool**.

EDC16C36_V04_DF970/EDC16C36_V08_DF970

GETtheMANUALS.org

DF980 PRESENT OR STORED	RICHNESS RATIO SENSOR FUNCTION 1.DEF: Above max threshold 2.DEF: Below minimum threshold 3.DEF: Signal incoherence

NOTES	**Conditions for applying the fault finding procedure to a stored fault:** The fault is declared present after the ignition has been switched on.
	Special notes: Use bornier **Elé. 1681** for any operations on the injection computer connectors.
	Use the **Vel Satis ph2, Espace IV ph2, Laguna II ph2** wiring diagram Technical Note.

Check the injection computer connections.
Check the richness ratio sensor connections.
If there is a repair method (see **Technical Note 6015A, Repairing electrical wiring, Wiring: Precautions for repair**), repair the wiring, otherwise replace it.

Check the **continuity, insulation and absence of interference resistance** on the following connections:
– Connection code **3AAS**,
– Connection code **3AAT**,
– Connection code **3AAU**,
– Connection code **3AAV**,
– Connection code **3AAW**,
between components **1587 and 120**.

Check for **+ 12 V** on the richness ratio sensor connector.
– Connection code **3FB** of component **1587**.

If the connection or connections are faulty and there is a repair procedure (see **Technical Note 6015A, Electrical wiring repair, Wiring: Precautions for repair**), repair the wiring, otherwise replace it.

If the fault is still present, contact the Techline.

AFTER REPAIR	Deal with any other faults. Clear the fault memory. Switch off the ignition until the end of the power-latch phase, and carry out a road test followed by a check with the **diagnostic tool**.

EDC16C36_V04_DF980/EDC16C36_V08_DF980

GETtheMANUALS.org

The global **conformity check** for the functions and sub-functions of this system is no longer explained in the conformity check sub-section. However, all of the information available from the functions and sub-functions of the **Clip diagnostic tool** is available in the following sections:
For **STATUSES**, refer to the **INTERPRETATION OF STATUSES** section
For **PARAMETERS**, refer to the **INTERPRETATION OF PARAMETERS** section
For **COMMANDS**, refer to the **INTERPRETATION OF COMMANDS** section

GETtheMANUALS.org

Tool status	Diagnostic tool title
ET001	+ After ignition computer feed
ET003	Engine immobiliser
ET004	Air conditioning authorisation
ET007	Pre-postheating control
ET014	Fan assembly 1 check
ET015	Fan assembly 2 check
ET038	Engine
ET041	Gear
ET042	Cruise control/speed limiter
ET076	Starting
ET077	Impact detected
ET079	Air conditioning present
ET088	Compressor actuation request
ET104	Injector code use
ET120	Pre-postheating signal
ET143	Low speed fan assembly relay control
ET144	High-speed fan assembly relay control
ET205	Heating element No. 1 relay control
ET206	Heating element No. 2 relay control
ET207	heating element No. 3 relay control
ET238	Synchronisation
ET300	Richness regulation
ET341	Immobiliser code programmed
ET405	Clutch pedal switch
ET415	Cruise control/speed limiter deactivation
ET587	Cooling of recirculated exhaust gas
ET614	Heating elements switched off
ET651	EGR programming cut-off

GETtheMANUALS.org

Tool status	Diagnostic tool title
ET703	Cruise control/speed limiter buttons
ET704	Brakecontact No. 1
ET705	Brakecontact No. 2
ET706	Stored engine status No. 1
ET707	Stored engine status No. 2
RT708	Stored engine status No. 3
ET709	Stored engine status No. 4
ET710	Stored engine status No. 5
ET711	Stored engine status No. 6
ET712	Stored engine status No. 7
ET713	Stored engine status No. 8
ET714	Stored engine status No. 9
ET715	Stored engine status No. 10
ET742	Stored rege.* request status No. 1
ET743	Stored rege.* request status No. 2
ET744	Stored rege.* request status No. 3
ET745	Stored rege.* request status No. 4
ET746	Stored rege.* request status No. 5
ET747	Stored rege.* request status No. 6
ET748	Stored rege.* request status No. 7
ET749	Stored rege.* request status No. 8
ET750	Stored rege.* request status No. 9
ET751	Stored rege.* request status No. 10

* rege: regeneration

GETtheMANUALS.org

ET001	COMPUTER + AFTER IGNITION FEED

STATUS DEFINITION	**PRESENT**: This status indicates that the + after ignition feed is active. **ABSENT**: This status indicates that the + after ignition feed is not active.

NOTES	Use the Wiring diagram Technical Note for **Laguna II ph2**, **Vel satis ph2**, **Espace IV ph2**.

Conformity check with engine stopped and ignition on, or engine running, and engine coolant temperature > 80°C, without electrical consumers

PRESENT	This status indicates that the + after ignition feed is active. In the event of a fault, refer to the interpretation of **DF046 Battery voltage** or **DF151 Main relay circuit**.
ABSENT	This status indicates that the + after ignition feed is not active.

AFTER REPAIR	Carry out a road test, then check with the **diagnostic tool**.

EDC16C36_V08_ET001/EDC16C36_V04_ET001

GETtheMANUALS.org

ET001 CONTINUED	

Sensor electrical conformity

If the ignition is not switched on, status **ET001** should be **ABSENT**.
As soon as the ignition is switched on, the computer should be supplied with power. Status **ET001** becomes **PRESENT.**
If this status remains **ABSENT**, follow the procedure below:
Check the condition of fuse **FM3** (**30A**) in the engine fuse and relay box**.**
Check for **earth** on the injection computer.
– Connection code **NT** of component **120** (4 connections).

Check the continuity and absence of interference resistance on the following connection:
– Connection code **3AA** between components **120 and 983**.
If the connection or connections are faulty and there is a repair procedure (see **Technical Note 6015A**, **Electrical wiring repair**, **Wiring: Precautions for repair**), repair the wiring, otherwise replace it

Check the connections and the condition of the contacts of the brown **connector B** on the injection computer.
If the connector is faulty and there is a repair method (see **Technical Note 6015A**, **Repairing electrical wiring**, **Wiring: Precautions for repair**), repair the wiring, otherwise replace the wiring.
If the fault is still present, contact the techline.

AFTER REPAIR	Carry out a road test, then check with the **diagnostic tool**.

GETtheMANUALS.org

ET003	ENGINE IMMOBILISER

STATUS DEFINITION	**ACTIVE**: This status indicates that the immobiliser is active. **INACTIVE**: This status indicates that the immobiliser is inactive.

Conformity check with engine stopped and ignition on, or engine running, and engine coolant temperature > 80°C, without electrical consumers

ACTIVE	***NOTES***	If status **ET003** is permanently **ACTIVE**, refer to the UCH diagnostic note (see **87B**, **Passenger compartment connection unit**).

INACTIVE	***NOTES***	When the ignition is switched on and when driving, status **ET003** should be **INACTIVE**. If it isn't, refer to the UCH diagnostic note (see **87B**, **Passenger compartment connection unit**).

AFTER REPAIR	Carry out a road test, then check with the **diagnostic tool**.

EDC16C36_V08_ET003/EDC16C36_V04_ET003

GETtheMANUALS.org

ET004	AIR CONDITIONING AUTHORISATION

STATUS DEFINITION	**YES**: This status indicates that the air conditioning is active. **NO**: This status indicates that the air conditioning is inactive.

NOTES	None.

Conformity check with engine stopped and ignition on, or engine running, and engine coolant temperature > 80°C

"YES" or "NO"	If the air conditioning is authorised or the compressor actuated (see **62A, Air conditioning**).

AFTER REPAIR	Carry out a road test, then check with the **diagnostic tool**.

EDC16C36_V04_ET004/EDC16C36_V08_ET004

GETtheMANUALS.org

ET004 CONTINUED	

Sensor electrical conformity	
YES	Air conditioning authorisation becomes **YES** if: – the air conditioning request has been made by the driver (air conditioning switch in **AC** or **AUTO** position with minimum ventilation), – the engine is not under full load, – the air conditioning system is not faulty.
NO	Status **ET004** remains **NO** under the following conditions: – Vehicle stopped with the ignition on, – faults present in the air conditioning circuit, – no air conditioning request made by the driver, – engine under full load. If status **ET004** remains **NO** then the air conditioning should be authorised; check: – that the air conditioning compressor starts correctly, – the air conditioning system supply fuses, – the presence of refrigerant in the air conditioning circuit. If the fault is still present, check the air conditioning computer faults (see **62C, Air conditioning**).

AFTER REPAIR	Carry out a road test, then check with the **diagnostic tool**.

GETtheMANUALS.org

ET007	PRE-POSTHEATING UNIT CONTROL

STATUS DEFINITION	**ACTIVE**: when the heater plugs are activated according to the engine coolant temperature. **INACTIVE**: after the engine has been running for a certain period In the event of a fault, consult the interpretation of fault **DF017 Preheating unit control circuit**.

NOTES	Use the Wiring diagram Technical Note for **Laguna II ph2**, **Vel satis ph2**, **Espace IV ph2**.

Conformity check with engine stopped and ignition on

ACTIVE

When the ignition is switched on, status **ET007** should be **ACTIVE** for a time that varies according to the engine coolant temperature. Both the relay and the heater plugs are then supplied.
After starting the status should remain **ACTIVE** for a variable period depending on the engine coolant temperature. This is postheating.

If **ET007** is **INACTIVE** when the ignition is switched on, check:
- Supply fuse **FM12** (**70A**) in the engine fuse and relay box.
- The feed to the heater plugs after relay actuation, and the connections of the heater plugs.
- The **continuity and absence of interference resistance** between:
  - Connection code **37Z** between components **257** and **680**.
  - Connection code **37AA** between components **257** and **681**.
  - Connection code **37AB** between components **257** and **682**.
  - Connection code **37AC** between components **257** and **683**.

The condition and correct connection of the contacts of the preheating unit connector.

If the vehicle starts, postheating is ended and status ET007 remains **ACTIVE** during the engine operating phase, consult the interpretation of faults **DF017 Preheating unit control circuit** and **DF025 Preheating unit diagnostic connection**.

AFTER REPAIR	Carry out a road test, then check with the **diagnostic tool**.

EDC16C36_V08_ET007/EDC16C36_V04_ET007

GETtheMANUALS.org

ET007 CONTINUED	

INACTIVE	If the vehicle does not start or the status remains **INACTIVE** and preheating has not been carried out during the starting phase, check the following connections: – Connection code **3FY**, – Connection code **3FF**, between components **120 and 257**.
	Check for **+ 12 V** on the pre-postheating unit (**fuse FM12 (70 A)**). – Connection code **BP35** of component **257.** If the connection or connections are faulty and there is a repair procedure (see **Technical Note 6015A**, **Electrical wiring repair**, **Wiring: Precautions for repair**), repair the wiring, otherwise replace it.

Conformity check with engine running, engine coolant temperature > 80°C, without electrical consumers

"ACTIVE" then "INACTIVE"	After the engine has been running for a certain period, the status changes from **ACTIVE to INACTIVE**. In the event of a fault, consult the interpretation of fault **DF017 Preheating unit control circuit**.

AFTER REPAIR	Carry out a road test, then check with the **diagnostic tool**.

GETtheMANUALS.org

ET014	FAN ASSEMBLY 1 CHECK

STATUS DEFINITION	**RUNNING**: This status indicates that fan assembly 1 is being supplied. **OFF**: This status indicates that fan assembly 1 is not being supplied.

NOTES	None.

Note:
Status **ET014** and status **ET143 Low speed fan assembly relay control** change simultaneously.

Conformity check with engine stopped and ignition on, or engine running, and engine coolant temperature > 80°C, without electrical consumers

RUNNING	The low-speed engine fan is supplied in three scenarios: – the engine coolant temperature is greater than **89°C**, – **the air conditioning is operating,** – the injection computer has system faults that could lead to the engine overheating. When the low-speed fan assembly is supplied: – status **ET014** becomes **RUNNING** – status **ET143 Low speed fan assembly relay control** becomes **ACTIVE**.
	If the low-speed engine fan does not operate, refer to the test for status **ET143 Low speed fan assembly relay control**.
STOPPED	The low-speed fan assembly stops when: – the engine coolant temperature is less than**89°C**, – the air conditioning is not switched on by the driver.

Note:
In the event that the low-speed engine fan assembly is defective, the high-speed engine fan assembly will then be activated.

AFTER REPAIR	Carry out a road test, then check with the **diagnostic tool**.

EDC16C36_V04_ET014/ EDC16C36_V08_ET014

GETtheMANUALS.org

ET015	FAN ASSEMBLY 2 CHECK

STATUS DEFINITION	**RUNNING**: This status indicates that fan assembly 2 is being supplied. **OFF**: This status indicates that fan assembly 2 is not being supplied.

NOTES	None.

Note:
Status **ET015** and status **ET144 High speed fan assembly relay control** change status simultaneously.

Conformity check with engine stopped and ignition on, or engine running, and engine coolant temperature > 80°C, without electrical consumers

RUNNING	The engine fan assembly can be supplied when: – the engine coolant temperature is greater than **99°C**, – the injection computer has system faults that could lead to the engine overheating. When the high speed fan is supplied: – status **ET015** becomes **RUNNING,** – status **ET144 High speed fan assembly relay control** becomes **ACTIVE**.
	If the high speed engine fan does not operate, refer to the test for status **ET144 High speed fan assembly control relay**.

STOPPED	The high speed fan assembly is stopped when the engine coolant temperature is less than**89°C.**

Note:
If the low-speed fan assembly is defective, the high-speed fan assembly will be activated.

AFTER REPAIR	Carry out a road test, then check with the **diagnostic tool**.

EDC16C36_V04_ET015/ EDC16C36_V08_ET015

GETtheMANUALS.org

ET038	ENGINE

STATUS DEFINITION	**STOPPED**: This status indicates that the engine ignition is on without the starter engaged. **STALLED**: This status indicates that the engine has stalled. The vehicle is still under **+ after ignition feed**. **UNDER STARTER**: This status indicates that the engine is in starting phase. **RUNNING**: This status indicates that the engine has started.

NOTES	None.

Conformity check with engine stopped and ignition on

STOPPED	Status **ET038** is **STOPPED** if the engine ignition is on without the starter engaged. In the event of a fault, switch off the ignition, and wait for the **diagnostic tool** message (maximum time **8 minutes**): **"Communication lost with computer: EDC16C36, check the tool connection and computer power supply"**. If the fault is still present, contact the Techline.
STALLED	Status **ET038** is **STALLED** when the engine has stalled. The vehicle is still under **+ after ignition feed**. In case of inconsistency, contact the Techline.

With the engine running, engine coolant temperature > 80°C, without electrical consumers

UNDER STARTER	Status **ET038** is **STARTER MOTOR** when the engine is in starting phase. In case of inconsistency, contact the Techline.
RUNNING	Status **ET038** is **Running** if the engine has started. In case of inconsistency, contact the Techline.

AFTER REPAIR	Carry out a road test, then check with the **diagnostic tool**.

EDC16C36_V04_ET038/EDC16C36_V08_ET038

GETtheMANUALS.org

ET041	GEAR

STATUS DEFINITION	**STATUS1 Park/Neutral position**: this status indicates the gear engaged. **STATUS2 Gear engaged: 1st**: this status indicates the gear engaged. **STATUS3 Gear engaged: 2nd**: this status indicates the gear engaged. **STATUS4 Gear engaged: 3rd**: this status indicates the gear engaged. **STATUS5 Gear engaged: 4th**: this status indicates the gear engaged. **STATUS6 Gear engaged: 5th**: this status indicates the gear engaged. **STATUS7 Gear engaged: R**: this status indicates the gear engaged.

NOTES	None.

Conformity check with engine stopped and ignition on, or engine running, and engine coolant temperature > 80°C, without electrical consumers

Status **ET041** may be:
– **STATUS1 Park/Neutral position** or
– **STATUS2 Gear engaged: 1st** or
– **STATUS3 Gear engaged: 2nd** or
– **STATUS4 Gear engaged: 3rd** or
– **STATUS5 Gear engaged: 4th** or
– **STATUS6 Gear engaged: 5th** or
– **STATUS7 Gear engaged: R.**
In the event of a fault, check that the gearbox **multifunction switch** is operating correctly (see **23A**, **Automatic gearbox**).

AFTER REPAIR	Carry out a road test, then check with the **diagnostic tool**.

EDC16C36_V08_ET041/EDC16C36_V04_ET041

GETtheMANUALS.org

ET042	CRUISE CONTROL/SPEED LIMITER

NOTES	Use the **Vel Satis ph2**, **Espace IV ph2**, **Laguna II ph2** wiring diagram Technical Note.

NO DETECTED	If the vehicle is not fitted with cruise control/speed limiter function buttons, status **ET042** is permanently **NOT DETECTED**. This confirms that the cruise control/speed limiter function is not present on the vehicle. If the vehicle is fitted with cruise control or speed limiter function buttons and the main switch is in the rest (or neutral) position and the injection computer has just been programmed or reprogrammed, then status **ET042** is **NOT DETECTED**. To activate the cruise control or speed limiter function, press the main switch in the cruise control position and then in the speed limiter position. Return to rest position. The tool displays status **ET042**: **INACTIVE**. If not, several steps must be checked: return to the multiplex network test page on the CLIP application. Repeat the multiplex network test. Re-establish dialogue with the injection computer. Check **ET042**. If **ET042** is **INACTIVE**, the injection computer has detected the various positions of the main switch. The cruise control/speed limiter is active. If status **ET042** is still **NOT DETECTED**, check that the vehicle's owner has not had the cruise control/speed limiter function disabled in the past. Contact the Techline.

AFTER REPAIR	Carry out a road test, then check with the **diagnostic tool**.

EDC16C36_V08_ET042/EDC16C36_V04_ET042

GETtheMANUALS.org

ET042 CONTINUED 1	

INACTIVE

When the main switch is in rest position (or neutral), status **ET042** is **INACTIVE**.
If **CRUISE CONTROL** or **SPEED LIMITER** appears despite the main switch being in the rest (or neutral) position, carry out the following operations:

Check the connections of the cruise control/speed limiter main switch.
Check for **+ 12 V** APC on the main switch connector.
- Connection code **AP10** of component **1081**.

Disconnect the main switch and with it in the rest position, check the insulation between:
- Connection codes **AP10** and **3FX** of component **1081**.
- Connection codes **AP10** and **3PD** of component **1081**.

– In the **speed limiter position**, check the continuity between:
- Connection codes AP10 and 3PD of component 1081.

– In the **cruise control position**, check the continuity between:
- Connection codes **AP10** and **3FX** of component **1081**.

If these checks are not in order, replace the switch.

Check the **continuity**, **insulation and the absence of interference resistance** on the following connections:
- Connection code **3FX**,
- Connection code **3PD**,

between components **1081** and **120**

Also check the engine management computer connectors.
If the connection or connections are faulty and there is a repair procedure (see **Technical Note 6015A**, **Electrical wiring repair**, **Wiring: Precautions for repair**), repair the wiring, otherwise replace it.

AFTER REPAIR	Carry out a road test, then check with the **diagnostic tool**.

GETtheMANUALS.org

ET042 CONTINUED 2	

SPEED LIMITER

When the driver presses the main speed limiter switch, status **ET042** becomes **SPEED LIMITER**.
If **CRUISE CONTROL** or **INACTIVE** appears although the switch was pressed in the speed limiter position, carry out the following operations:

Check the connections of the cruise control/speed limiter main switch.
Check for **+ 12 V** APC on the main switch connector.
- Connection code **AP10** of component **1081**.

Disconnect the main switch and with it in the rest position, check the insulation between:
- Connection codes **AP10** and **3FX** of component **1081**.
- Connection codes **AP10** and **3PD** of component **1081**.

– In the **speed limiter position**, check the **continuity** between:
- Connection codes **AP10** and **3PD** of component **1081**.

– In the **cruise control position**, check the **continuity** between:
- Connection codes **AP10** and **3FX** of component **1081**.

If these checks show incorrect values, replace the main switch.

Check the **continuity**, **insulation and the absence of interference resistance** on the following connections:
- Connection code **3FX**,
- Connection code **3PD**,

between components **1081** and **120.**

Also check the engine management computer connectors.
If the connection or connections are faulty and there is a repair procedure (see **Technical Note 6015A**, **Electrical wiring repair**, **Wiring: Precautions for repair**), repair the wiring, otherwise replace it.

AFTER REPAIR	Carry out a road test, then check with the **diagnostic tool**.

GETtheMANUALS.org

ET042 CONTINUED 3	

CRUISE CONTROL

When the driver presses the main cruise control button, status **ET042** becomes **CRUISE CONTROL**.

If **SPEED LIMITER** or **INACTIVE** appears although the driver pressed the switch in the cruise control position, carry out the following operations:
Check the connections of the cruise control/speed limiter main switch.

Check for **+ 12 V** APC on the main switch connector.
- Connection code **AP10** of component **1081**.

Disconnect the main switch, and when it is in the rest position, check the insulation between:
- Connection codes **AP10** and **3FX** of component **1081**.
- Connection codes **AP10** and **3PD** of component **1081**.

– In the **speed limiter position**, check the continuity between:
- Connection codes **AP10** and **3PD** of component **1081**.

– In the **cruise control position**, check the continuity between:
- Connection codes **AP10** and **3FX** of component **1081**.

If these checks show incorrect values, replace the main switch.

Check the **continuity**, **insulation and the absence of interference resistance** on the following connections:
- Connection code **3FX**,
- Connection code **3PD**,

between components **1081** and **120.**

Also check the engine management computer connectors.
If there is a repair procedure (see **Technical Note 6015A**, **Repairing electrical wiring**, **Wiring: Precautions for repair)** repair the wiring, otherwise replace it.

AFTER REPAIR	Carry out a road test, then check with the **diagnostic tool**.

GETtheMANUALS.org

ET076	STARTING

STATUS DEFINITION	**AUTHORISED**: this status indicates that starting the engine is authorised. **PROHIBITED**: this status indicates that starting the engine is prohibited.

NOTES	None.

Conformity check with engine stopped and ignition on

AUTHORISED	Starting the vehicle is authorised when the UCH authorises starting. Status **ET076** changes to **AUTHORISED** if the vehicle cards are recognised and the engine immobiliser is inactive.
PROHIBITED	If the card is not recognised by the UCH, starting the vehicle is prohibited. Status **ET076** is **INHIBITED** and the vehicle is not authorised to start. Run fault finding on the UCH and refer to the fault finding note for the vehicle to deal with any faults (see **87B**, **Passenger compartment connection unit**).

AFTER REPAIR	Carry out a road test, then check with the **diagnostic tool**.

EDC16C36_V04_ET076/ EDC16C36_V08_ET076

GETtheMANUALS.org

ET077	IMPACT DETECTED

STATUS DEFINITION	**YES**: This status indicates that the injection computer has detected an impact. **NO**: This status indicates that the injection computer has not detected an impact.

NOTES	None.

Conformity check with engine stopped and ignition on, or engine running, and engine coolant temperature > 80°C, without electrical consumers

YES	If the vehicle has been involved in an accident, the injection computer receives the impact signal via the airbag computer over the multiplex network, and may switch off the injection. Is status **ET077 YES**? Switch off the ignition for **10 seconds**, then switch it back on, so the engine can be restarted. After the repair, clear the faults (even if no fault is displayed). Carry out a multiplex network test and deal with any faults. Run fault finding on the airbag computer (see **88C**, **Airbag and pretensioners**).
NO	Under normal operating conditions, status **ET077** is **NO** when the computer has received no impact signal.

AFTER REPAIR	Carry out a road test, then check with the **diagnostic tool**.

EDC16C36_V04_ET077/EDC16C36_V08_ET077

GETtheMANUALS.org

ET079	AIR CONDITIONING PRESENT

STATUS DEFINITION	**YES**: This status indicates that air conditioning is present on the vehicle. **NO**: This status indicates that air conditioning is not present on the vehicle.

NOTES	The heating and air conditioning system is present depending on the vehicle's equipment level.

Conformity check with engine stopped and ignition on, or engine running, and engine coolant temperature > 80°C

YES or **NO**, depending on the vehicle equipment.

AFTER REPAIR	Carry out a road test, then check with the **diagnostic tool**.

EDC16C36_V04_ET079/ EDC16C36_V08_ET079

GETtheMANUALS.org

ET088	REQUEST TO START COMPRESSOR

STATUS DEFINITION	**ACTIVE**: This status indicates that the compressor is engaged. **INACTIVE**: This status indicates that the compressor is not engaged.

NOTES	None.

Engine running, engine coolant temperature > 80°C

ACTIVE	The air conditioning request has been made by the driver when pressing one of the air conditioning controls (Auto or AC). Status **ET088 becomes ACTIVE** and the computer authorises or does not authorise air conditioning depending on the operating conditions. If status **ET088** does not become **ACTIVE** when the control button is pressed, refer to the heating and air conditioning fault finding note (see **62A**, **Air conditioning**). Note: **Compressor operation is only authorised when the engine is running.**

Conformity check with engine stopped and ignition on

"INACTIVE"	When the driver deactivates the air conditioning, status **ET088** must become **INACTIVE**. If it does not, refer to the heating and air conditioning fault finding note (see **62A**, **Air conditioning**). Note: **Compressor operation is only authorised when the engine is running.**

AFTER REPAIR	Carry out a road test, then check with the **diagnostic tool**.

EDC16C36_V04_ET088/EDC16C36_V08_ET088

GETtheMANUALS.org

ET104	INJECTOR CODE USE

STATUS DEFINITION	**NO**: This status indicates that the injector codes have not been entered. **YES**: This status indicates that the injector codes have been entered. **FAULTY**: This status indicates that there has been an injector code entry fault.

NOTES	None.

Conformity check with engine stopped and ignition on, or engine running, and engine coolant temperature > 80°C, without electrical consumers

NO	If status **ET104** is **NO**, program the injector codes using: either command **SC002 Enter injector codes** or command **SC001 Write saved data** when **replacing with a blank computer** or **after programming** (Consult the procedures defined in the **Interpretation of commands** section).
YES	When injector code programming is complete, status **ET104** becomes **YES**.
FAULTY	If status **ET104** is **FAULTY**, program the injector codes using: either command **SC002 Enter injector codes** or command **SC001 Write saved data** when **replacing with a new computer or after reprogramming** (Consult the procedures defined in the **Interpretation of commands** section).

AFTER REPAIR	Carry out a road test, then check with the **diagnostic tool**.

EDC16C36_V04_ET104/EDC16C36_V08_ET104

GETtheMANUALS.org

ET120	PRE-POSTHEATING SIGNAL

STATUS DEFINITION	**PRESENT**: This status indicates that the pre-postheating signal is still active. **ABSENT**: This status indicates that the pre-postheating signal is not active.

NOTES	None.

Conformity check with engine stopped and ignition on, or engine running, and engine coolant temperature > 80°C, without electrical consumers

PRESENT	Status **ET120** is **PRESENT** when the **+ after ignition feed** is activated. If status **ET120** is still **ABSENT**, refer to faults **DF017 Preheating unit control circuit** and **DF025 Preheating unit diagnostic line**.
ABSENT	Status **ET120** is **ABSENT** when the computer has just been (re)programmed.

AFTER REPAIR	Carry out a road test, then check with the **diagnostic tool**.

EDC16C36_V04_ET120/EDC16C36_V08_ET120

GETtheMANUALS.org

ET143	LOW-SPEED FAN ASSEMBLY RELAY CONTROL

STATUS DEFINITION	**ACTIVE**: This status indicates that the low speed fan assembly relay is being actuated. **INACTIVE**: This status indicates that the low speed fan assembly relay is not being actuated.

NOTES	If the vehicle is equipped with air conditioning, the fan assembly electrical circuit contains **3 relays according to the vehicle type**. The 1st speed fan assembly relay will be actuated when the engine coolant temperature exceeds **89°C** and its function is to cool the engine so that the engine temperature does not exceed **99°C**. If the engine coolant temperature exceeds **99°C**, both of the 2nd speed fan assembly relays will operate and the fan will rotate faster.
	Use the Wiring diagram Technical Note for **Laguna II ph2**, **Vel satis ph2**, **Espace IV ph2**.

WARNING
If the vehicle is equipped with air conditioning, the engine cooling fan will operate at 1st speed as soon as the air conditioning compressor is activated.

Conformity check with engine stopped and ignition on	
INACTIVE	Engine cold and air conditioning switched off

Conformity check with engine running, engine coolant temperature > 80°C
(heating and air conditioning off) **INACTIVE** or **ACTIVE**, depending on the engine temperature.

AFTER REPAIR	Carry out a road test, then check with the **diagnostic tool**.

EDC16C36_V04_ET143/EDC16C36_V08_ET143

GETtheMANUALS.org

ET143 CONTINUED 1	

ACTIVE	When the coolant reaches **89°C**, the injection computer actuates the low speed cooling fan assembly relay, and status **ET143** becomes **ACTIVE**. The relay then supplies the fan assembly and the cooling fan switches on. If status **ET143** is **ACTIVE**, but the cooling fans are not running, carry out the following operations: – Check the condition of fuse **FM15** (**60 A)** in the engine fuse and relay box. – Disconnect the fan assembly relays, check their operation and the condition of the connections. – Carry out the following electrical checks according to the type of vehicle: **LAGUNA II PH2:** Check for **+ 12 V** on connection **49B** of component **262** and on connection **BP71** of component **188**. – Check for earth on connection **MAS** of component **262**. If the tests are ok, replace the defective fan. If not, carry out the following operations: – Check the **continuity, insulation and the absence of interference resistance** on the following connections: – Connection code **49B** between components **262**, **335** and **336.** – Connection code **MAS** between components **262** and **MAS**. – Connection code **49A** between components **188** and **337**. – Connection code **BP71** between components **188** and **597**. – Connection code **49T** between components **336** and **337**. – Connection code **3FB**, – Connection code **3JN**, between components **336** and **120**. If the connection or connections are faulty and there is a repair procedure (see **Technical Note 6015A**, **Electrical wiring repair**, **Wiring: Precautions for repair**), repair the wiring, otherwise replace it.

AFTER REPAIR	Carry out a road test, then check with the **diagnostic tool**.

GETtheMANUALS.org

ET143 CONTINUED 2	

ACTIVE	**VELSATIS PH2:** Check for **+ 12 V** on connection **49B** of component **262** and on connection **BP72** of component **188**. – Check for earth on connection **MAS** of component **262**. If the tests are ok, replace the defective fan. If not, carry out the following operations: – Check the **continuity**, **insulation and the absence of interference resistance** on the following connections: – Connection code **49B** between components **262**, **1827** and **1829.** – Connection code **MAS** between component **262** and **MAS**. – Connection code **49A** between components **188**, **1828** and **1829.** – Connection code **BP72** between components **188** and **597**. – Connection code **49T** between components **1829** and **1831**. – Connection code **3JN** between components **1829** and **120**. – Connection code **3FB** between components **1831** and **120**. If the connection or connections are faulty and there is a repair procedure (see **Technical Note 6015A**, **Electrical wiring repair**, **Wiring: Precautions for repair**), repair the wiring, otherwise replace it.

AFTER REPAIR	Carry out a road test, then check with the **diagnostic tool**.

GETtheMANUALS.org

ET143 CONTINUED 3	

ACTIVE	**ESPACE IV PH2:** Check for **+ 12 V** on connection **49B** of component **262** and on connection **BP71** of component **188**. – Check for earth on connection **MAS** of component **262**. If the tests are ok, replace the defective fan. If not, carry out the following operations: – Check the continuity, insulation and the absence of interference resistance on the following connections: – Connection code **49B** between components **262**, **1827** and **1829.** – Connection code **MAS** between components **262** and **MAS**. – Connection code **49A** between components **188**, **1828** and **1829.** – Connection code **BP71** between components **188** and **1827** and **597**. – Connection code **49T** between components **1829** and **1831**. – Connection code **3JN** between components **1829** and **120**. – Connection code **3FB** between components **1831** and **120**. If the connection or connections are faulty and there is a repair procedure (see **Technical Note 6015A**, **Electrical wiring repair**, **Wiring: Precautions for repair**), repair the wiring, otherwise replace it.
INACTIVE	When the injection computer no longer requests cooling, status **ET143** changes to **INACTIVE**. The fan unit should switch off.

AFTER REPAIR	Carry out a road test, then check with the **diagnostic tool**.

GETtheMANUALS.org

ET144	HIGH-SPEED FAN ASSEMBLY RELAY CONTROL

STATUS DEFINITION	**ACTIVE**: This status indicates that the high speed fan assembly relay is being actuated. **INACTIVE**: This status indicates that the low speed fan assembly relay is not being actuated.

NOTES	If the vehicle is not fitted with air conditioning, low-speed fan assembly relay does not exist. The circuit only contains a single control relay to supply the engine cooling fan. The engine cooling fan will therefore have only one operating speed.
	Use the Wiring diagram Technical Note for **Laguna II ph2**, **Vel satis ph2**, **Espace IV ph2**.

Conformity check with engine stopped and ignition on	
INACTIVE	Engine cold and air conditioning switched off

Conformity check with engine running, engine coolant temperature > 80°C
(heating and air conditioning off) **INACTIVE** or **ACTIVE**, depending on the engine temperature.

AFTER REPAIR	Carry out a road test, then check with the **diagnostic tool**.

EDC16C36_V04_ET144/EDC16C36_V08_ET144

GETtheMANUALS.org

ET144 CONTINUED 1	

ACTIVE	When the coolant reaches **99°C**, the injection computer actuates the fan assembly relay and status **ET144** becomes **ACTIVE**. The relay then supplies the cooling fan. If status **ET144** is **ACTIVE**, but the cooling fan is not running, perform the following operations: – Check the condition of fuse **FM15** (**60 A)** in the engine fuse and relay box. – Disconnect the fan assembly relays, check their operation and the condition of the connections. Carry out the following electrical checks according to the type of vehicle: **LAGUNA II PH2:** – Check for **+ 12 V** on connection **BP71** of component **188** and on connection **49B** of component **262**. – Check for earth on connection **49A** of component **188** and on connection **MAS** of component **262**. If the tests are ok, replace the defective fan. If not, carry out the following operations: – Check the **continuity**, **insulation and the absence of interference resistance** on the following connections: – Connection code **49B** between components **262**, **335** and **336.** – Connection code **MAS** between components **262** and **MAS**. – Connection code **49A** between components **188** and **337**. – Connection code **BP71** between components **188** and **335** and **597**. – Connection code **3FB** between components **335**, **336**, **337** and **120.** – Connection code **MAS** between components **337** and **MAS**. – Connection code **3JP** between components **335, 337** and **120**. If the connection or connections are faulty and there is a repair procedure (see **Technical Note 6015A**, **Electrical wiring repair**, **Wiring: Precautions for repair**), repair the wiring, otherwise replace it.

AFTER REPAIR	Carry out a road test, then check with the **diagnostic tool**.

GETtheMANUALS.org

ET144 CONTINUED 2	

ACTIVE	**VEL SATIS PH2:** – Check for **+ 12 V** on connection **BP72** of component **188** and on connection **49B** of component **262**. – Check for earth on connection **49A** of component **188** and on connection **MAS** of component **262**. If the tests are ok, replace the defective fan. If not, carry out the following operations: – Check the **continuity**, **insulation and the absence of interference resistance** on the following connections: – Connection code **49B** between components **262**, **1827** and **1829.** – Connection code **MAS** between components **262** and **MAS**. – Connection code **49A** between components **188**, **1828** and **1829.** – Connection code **BP72** between components **188** and **597**. – Connection code **3FB** between components **1831** and **120**. – Connection code **MAS** between components **1828**, **262** and **MAS**. – Connection code **3JP** between components **1831** and **120**. If the connection or connections are faulty and there is a repair procedure (see **Technical Note 6015A**, **Electrical wiring repair**, **Wiring: Precautions for repair**), repair the wiring, otherwise replace it.

AFTER REPAIR	Carry out a road test, then check with the **diagnostic tool**.

GETtheMANUALS.org

ET144 CONTINUED 3	

ACTIVE	**ESPACE IV PH2:** – Check for **+ 12 V** on connection **BP71** of component **188** and on connection **49B** of component **262**. – Check for earth on connection **49A** of component **188** and on connection **MAS** of component **262**. If the tests are ok, replace the defective fan. If not, carry out the following operations: – Check the **continuity**, **insulation and the absence of interference resistance** on the following connections: – Connection code **49B** between components **262**, **1827** and **1829.** – Connection code **MAS** between components **262** and **MAS**. – Connection code **49A** between components **188**, **1828** and **1829.** – Connection code **BP71** between components **188** and **1827** and **597**. – Connection code **3FB** between components **1831** and **120**. – Connection code **MAS** between components **1828**, **262** and **MAS**. – Connection code **3JP** between components **1831** and **120**. If the connection or connections are faulty and there is a repair procedure (see **Technical Note 6015A**, **Electrical wiring repair**, **Wiring: Precautions for repair**), repair the wiring, otherwise replace it.
INACTIVE	When the injection computer no longer requests cooling, status **ET144** changes to **INACTIVE**. The fan unit should switch off.

AFTER REPAIR	Carry out a road test, then check with the **diagnostic tool**.

GETtheMANUALS.org

ET205 **ET206** **ET207**	THERMOPLUNGER 1 RELAY CONTROL THERMOPLUNGER 2 RELAY CONTROL THERMOPLUNGER 3 RELAY CONTROL

STATUS DEFINITION	**ACTIVE**: This status indicates that the thermoplunger is supplied. **INACTIVE**: This status indicates that the thermoplunger is not supplied.

NOTES	**Only for Laguna II ph2 and Vel Satis ph2.**

INACTIVE

Statuses **ET205**, **ET206**, **ET207** are **INACTIVE** with the ignition on and the engine stopped, or when the engine is warm.

ACTIVE

Statuses **ET205**, **ET206** and **ET207** are **ACTIVE** when the engine is started, the engine coolant temperature is low (**< 15°C**) and the air temperature is low (**< 5°**).
This program allows the engine coolant to be heated to enable the passenger compartment to be heated.
The thermoplungers also act both to load the engine to improve regeneration of the particle filter

To control the operation of the thermoplunger relays, run the following commands:
AC063 Thermoplunger no. 1 relay.
AC064 Thermoplunger no. 2 relay.
AC031 Thermoplunger no. 3 relay.

In the event of a fault, refer to the interpretation of faults:
DF034 "Heating element 3 relay control circuit".
DF033 Thermoplunger 2 relay control circuit.
DF032 Thermoplunger 1 relay control circuit.

AFTER REPAIR	Carry out a road test, then check with the **diagnostic tool**.

GETtheMANUALS.org

ET238	SYNCHRONISATION

STATUS DEFINITION	Synchronisation is carried out during the engine starting phase. The camshaft position sensor and the TDC sensor are synchronised. Once this synchronisation has been carried out, it enables the computer to identify cylinder no.1 and to ascertain the precise position of the cylinder's top dead centre. Synchronisation also allows the computer to determine the injection strategy.

NOTES	None.

Conformity check with engine stopped and ignition on, or engine running, and engine coolant temperature > 80°C, without electrical consumers

COMPLETED	Status **ET238** is **DONE** when the engine is started. The computer has identified cylinder no. 1 and has identified the exact top dead centre position. Injection phasing and engine management are possible, and the engine should be working properly.
NOT PERFORMED	Status **ET238** is **NOT COMPLETED** if the engine has been stopped with the **+ after ignition feed** on. If status **ET238** remains **NOT COMPLETED** after an attempted start, consult the interpretation of fault **DF195 Camshaft sensor/engine speed consistency**.

AFTER REPAIR	Carry out a road test, then check with the **diagnostic tool**.

EDC16C36_V04_ET238/EDC16C36_V08_ET238

GETtheMANUALS.org

ET300	RICHNESS REGULATION

STATUS DEFINITION	**ACTIVE**: This status indicates that the richness is regulated. **INACTIVE**: This status indicates that the richness is not regulated.

NOTES	None.

Conformity check with engine stopped and ignition on

"INACTIVE"	The status is **INACTIVE** when the engine is not running. In the event of a fault, consult the interpretation of fault **DF967 Richness ratio sensor circuit**.

With engine running at idle speed, engine coolant temperature > 80°C, without electrical consumers

ACTIVE	The status is **ACTIVE** when the engine is running. In the event of a fault, consult the interpretation of fault **DF967 Richness ratio sensor circuit**.

AFTER REPAIR	Carry out a road test, then check with the **diagnostic tool**.

EDC16C36_V04_ET300/EDC16C36_V08_ET300

GETtheMANUALS.org

ET341	IMMOBILISER CODE PROGRAMMED

STATUS DEFINITION	**YES**: This status indicates that the immobiliser code has been programmed. **NO**: This status indicates that the immobiliser code has not been programmed.

NOTES	None.

Conformity check with engine stopped and ignition on, or engine running, and engine coolant temperature > 80°C, without electrical consumers

YES	Status **ET341** is **YES** if dialogue is possible between the UCH computer and the injection computer and the key code is recognised. The engine is only authorised to start if the code is recognised by the UCH computer and if status **ET003 Immobiliser is INACTIVE**.
NO	Status **ET341** is **NO** if dialogue is not possible between the UCH computer and the injection computer (status **ET003 Immobiliser remains ACTIVE**). The cause of this fault may be incorrect card programming; in this case refer to the UCH fault finding note and follow the card programming procedure. If the card programming is not the cause of the fault, run a multiplex network test and check that dialogue is possible between the UCH and the injection computer. If dialogue is not established, contact Techline.

AFTER REPAIR	Carry out a road test, then check with the **diagnostic tool**.

EDC16C36_V04_ET341/EDC16C36_V08_ET341

GETtheMANUALS.org

ET415	CRUISE CONTROL/SPEED LIMITER DEACTIVATION

STATUS DEFINITION	This status varies according to engine specifications.

NOTES	None.

Note:
Cruise control can be activated when the vehicle speed exceeds **18 mph (30 km/h).**
Status **ET415** shows various factors that cause deactivation of the cruise control/speed limiter function, due to a driver request or the external environment (e.g. STATUS 1).

IMPORTANT
Clear the fault memory by running command **RZ001 Fault memory** to reset this status to **NONE**.

WITHOUT	This status is present on the **diagnostic tool** if: The computer has been reinitialised. the computer has been reprogrammed.

STATUS 1	**Traction control request**
	If the vehicle is fitted with a traction control system, the cruise control function is deactivated every time the ABS computer calls for traction control. Status **ET415** becomes **STATUS 1** when driving, with cruise control active (**ET042: Cruise control/Speed limiter: CRUISE CONTROL**) and after a traction control request. This deactivates cruise control. **Reinitialise status ET415 on the injection computer by running command RZ001 Fault memory.** If status **ET415** becomes **STATUS 1** with no traction control request (see **38C**, **ABS**).

AFTER REPAIR	Carry out a road test, then check with the **diagnostic tool**.

EDC16C36_V04_ET415/EDC16C36_V08_ET415

GETtheMANUALS.org

ET415 CONTINUED 1	

STATUS 2	**Brake pedal depressed**
	The cruise control function is deactivated when the brake pedal is depressed. Status **ET415** becomes **STATUS 2**, when driving with the cruise control active (**ET042 Cruise control/Speed limiter: CRUISE CONTROL**) and brake pedal depressed. This deactivates cruise control. **Reinitialise status ET415 on the injection computer by running command RZ001 Fault memory.** If status **ET415** becomes **STATUS 2** without depressing the brake pedal, consult the interpretation of statuses **ET704** and **ET705 Brake contact No. 1 and No. 2**.

STATUS 3	**Clutch pedal depressed**
	Manual gearbox ONLY The cruise control function is deactivated when the gearbox is not coupled to the engine (clutch pedal depressed). Status **ET415** becomes **STATUS 3** when driving with the cruise control active (**ET042 Cruise control/speed limiter: CRUISE CONTROL**) and the clutch pedal is depressed. This deactivates cruise control. **Reinitialise status ET415 on the injection computer by running command RZ001 Fault memory.** If status **ET415** becomes **STATUS 3** without the clutch pedal being depressed, consult the interpretation of status **ET405 Clutch pedal switch**. If the vehicle is fitted with automatic transmission: Test the multiplex network: check the configuration of the multiplex network in relation to the vehicle's technical specification, especially the configuration of the automatic transmission computer (see **88B**, **Multiplexing**).

AFTER REPAIR	Carry out a road test, then check with the **diagnostic tool**.

GETtheMANUALS.org

ET415 CONTINUED 2	

STATUS 4	**Cancel button pressed**
	The cruise control/speed limiter function is deactivated whenever the suspend button is pressed. Status **ET415** becomes **STATUS 4** when driving with: – Either the cruise control is active, or – the speed limiter is active – and when the **"0"** button is pressed by the driver. This action deactivates the Cruise control/Speed limiter. **Reinitialise status ET415 on the injection computer by running command RZ001 Fault memory.** If status **ET415** becomes **STATUS 4** without pressing the “0” button, consult the interpretation of status **ET703 Cruise control/speed limiter buttons** and perform fault finding on the **R/0** control button located on the steering wheel, to the right.

STATUS 5	**Cruise control or speed limiter monitoring**
	This status appears when the vehicle brakes or decelerates sharply without the injection computer receiving a signal that the brake pedal switch has been pressed. If status **ET415** is **STATUS 5**, refer to the interpretation of statuses: **– ET042 Cruise control/Speed limiter,** **– ET703 Cruise control/speed limiter buttons,** **– ET704 Brake switch No. 1,** **– ET705 Brake switch No. 2,** to test the cruise control/speed limiter system components and identify the faulty component. Also, check the operation of the accelerator pedal, and use the **diagnostic tool** to check the presence of a fault connected with this component. Deal with them if necessary. **Reinitialise status ET415 on the injection computer by running command RZ001 Fault memory.** If status **ET415** changes to **STATUS 5**, deal with faults which are present or stored in the injection computer. If the fault is still present, contact the techline.

AFTER REPAIR	Carry out a road test, then check with the **diagnostic tool**.

GETtheMANUALS.org

ET415 CONTINUED 3	

STATUS 6	**Gear lever in neutral (manual gearbox) or the neutral position (automatic gearbox)**
	Status **ET415** becomes **STATUS 6**, when driving with the cruise control active (**ET042 Cruise control/speed limiter: CRUISE CONTROL**) and – if the driver puts the gear lever in neutral position on a manual gearbox without declutching or, – if the gear lever is in neutral on an automatic gearbox. This deactivates cruise control. **Reinitialise status ET415 on the injection computer by running command RZ001 Fault memory.** If status **ET415** becomes **STATUS 6** without shifting the gear lever into neutral on a manual gearbox without declutching, or into neutral on an automatic transmission, run fault finding on the ABS computer and check the configuration of the tyre size stored in the computer. If the configuration is correct, contact the Techline.

STATUS 7	**Lack of correlation between the request and the vehicle speed**
	Status **ET415** changes to **STATUS 7** if the computer detects too great a difference between the speed requested by the driver and the vehicle speed. This could occur when driving with cruise control active **(ET042 Cruise control/ speed limiter: CRUISE CONTROL)** and when there is a significant difference. This inconsistency deactivates cruise control. **Reinitialise status ET415 on the injection computer by running command RZ001 Fault memory.** If status **ET415** becomes **STATUS 7** without a great difference in speeds, contact Techline.

AFTER REPAIR	Carry out a road test, then check with the **diagnostic tool**.

GETtheMANUALS.org

ET415 CONTINUED 4	

STATUS 8	**Automatic gearbox in defect mode.**
	Status **ET415** becomes **STATUS 8**, when driving with cruise control active **(ET042: Cruise control/speed limiter: CRUISE CONTROL)** and if the automatic transmission is in defect mode. This signal is conveyed on the multiplex line and deactivates the cruise control. Carry out a multiplex network test, then run fault finding on the automatic transmission computer. Deal with any present or stored faults (see **23A**, **Automatic transmission**, **Interpretation of faults**). Clear the automatic transmission computer memory by running command **RZ001 Fault memory**. **Reinitialise status ET415 on the injection computer by running command RZ001 Fault memory.** If **STATUS 8** is still present, contact the Techline.

STATUS 9	**Vehicle speed monitoring**
	Status **ET415** becomes **STATUS 9** if the vehicle speed received by the computer is invalid or absent. This signal is conveyed on the multiplex line and deactivates the cruise control. Carry out a multiplex network test, then run fault finding on the ABS computer. Deal with any present or stored faults (see **38C**, **ABS**, **Interpretation of faults**). **Reinitialise status ET415 on the injection computer by running command RZ001 Fault memory.** If **STATUS 9** is still present, contact the Techline.

AFTER REPAIR	Carry out a road test, then check with the **diagnostic tool**.

GETtheMANUALS.org

ET415 CONTINUED 5	

STATUS 10	Monitoring by injection computer
	Status **ET415** becomes **STATUS 10** when driving, with cruise control active (**ET042 Cruise control/Speed limiter: CRUISE CONTROL**) and if the injection computer detects a fault on the engine management system, or excessive or insufficient speed. This signal is conveyed on the multiplex line and deactivates the cruise control. Carry out a multiplex network test, then Perform fault finding on the injection computer. Deal with any present or stored faults (see **Interpretation of faults**). **Reinitialise status ET415 on the injection computer by running command RZ001 Fault memory.** If **STATUS 10** is still present, contact the Techline.

AFTER REPAIR	Carry out a road test, then check with the **diagnostic tool**.

GETtheMANUALS.org

ET587	RECIRCULATED EXHAUST GAS COOLING

STATUS DEFINITION	**ACTIVE**: This status indicates that exhaust gas cooling is recirculated. **INACTIVE**: This status indicates that exhaust gas cooling is not recirculated.

NOTES	None.

Conformity check with engine stopped and ignition on, or engine running, and engine coolant temperature > 80°C, without electrical consumers

INACTIVE
According to computer programming.
In the event of a problem, consult the interpretation of faults **DF209 EGR valve position sensor circuit**, **DF304 EGR by-pass circuit** and **DF647 EGR valve position regulation**.

AFTER REPAIR	Carry out a road test, then check with the **diagnostic tool**.

EDC16C36_V08_ET587/EDC16C36_V04_ET587

GETtheMANUALS.org

ET651	EGR PROGRAMMING CUT-OFF

NOTES	None.

NONE	**No EGR cut-off, the EGR valve is operating correctly in accordance with the computer programs.**
STATUS 1, 5, 6, 7, 9, 10, 12, 13, 15, 19, 23, 24	Switch off the engine and wait for the **diagnostic tool** message (maximum time **8 minutes**): **"Communication lost with computer: EDC16C36, check the tool connection and computer power supply"**. Switch the ignition on and check for faults. Check the battery voltage with the engine switched off and the engine running. If no faults are present or stored, restart the vehicle and test at idle speed. **Do not accelerate too much or attain an engine speed that is too high.**
STATUS 3, 14, 16	Accelerate above idle speed for a few seconds.
STATUS 2	Check that the vehicle is completely stopped.
STATUS 4, 17	Check for present and stored faults, and repair.
STATUS 8	Reset the EGR offsets by consulting to the interpretation of command **SC036 Reinitialise programming** and select **EGR valve**.

AFTER REPAIR	Carry out a road test, then check with the **diagnostic tool**.

EDC16C36_V08_ET651/EDC16C36_V04_ET651

GETtheMANUALS.org

ET651 CONTINUED	
STATUS 11, 22	Allow the engine to heat up until this cut-off disappears.
STATUS 18	Check that the regeneration of the particle filter in progress has completely finished.
STATUS 20	Allow the engine to cool until this cut-off disappears.
STATUS 21	Too low atmospheric pressure, the EGR valve is disabled.

AFTER REPAIR	Carry out a road test, then check with the **diagnostic tool**.

GETtheMANUALS.org

ET703	CRUISE CONTROL/SPEED LIMITER BUTTONS

STATUS DEFINITION	**RESUME: "R"** button pressed. **SUSPEND: "0"** button pressed. **INCREASE:** Increase button pressed. **DECREASE:** Decrease button pressed. **INACTIVE:** This status indicates that no button has been pressed.

NOTES	Use the **Vel Satis ph2, Espace IV ph2, Laguna II ph2** wiring diagram Technical Note.

Conformity check with engine stopped and ignition on, or engine running, and engine coolant temperature > 80°C, without electrical consumers

INACTIVE	When no button has been pressed. In the event of a fault, consult the interpretation of status **ET703 Cruise control/ speed limiter buttons**.
SUSPEND	**"0"** button pressed. In the event of a fault, consult the interpretation of status **ET703 Cruise control/ speed limiter buttons**.
RESUME	**"R"** button pressed. In the event of a fault, consult the interpretation of status **ET703 Cruise control/ speed limiter buttons**.
DECREASE	Decrease button pressed. In the event of a fault, consult the interpretation of status **ET703 Cruise control/ speed limiter buttons**.
INCREASE	Increase button pressed. In the event of a fault, consult the interpretation of status **ET703 Cruise control/ speed limiter buttons**.

AFTER REPAIR	Carry out a road test followed by a check with the **diagnostic tool**.

EDC16C36_V08_ET703/EDC16C36_V04_ET703

GETtheMANUALS.org

ET703 CONTINUED 1	

Sensor electrical conformity

INACTIVE

Status **ET703** becomes **INACTIVE** when none of the cruise control/speed limiter buttons is pressed. These buttons are located on the steering wheel.

If status **ET703** does not display **INACTIVE**,
check the condition of the cruise control/speed limiter **±** button and the condition of its connector.
check the condition of the cruise control/speed limiter **R/0** button and its connector.

INCREASE

Status **ET703** becomes **INCREASE** when the cruise control/speed limiter **+** button is pressed. This button is on the steering wheel, on the left-hand side.

If status **ET703** does not display **INCREASE**, check the condition of the cruise control/speed limiter **±** button and its connector. Repair if necessary.

To carry out the checks and measurements in complete safety, observe the recommendations for removing the driver's front airbag (see **MR 402 (Vel Satis ph2), MR 361 (Espace IV ph2) or MR 395 (Laguna II ph2) Mechanical, 88C, Airbag and pretensioners, Driver's front airbag, Removal – Refitting**).

Measure **the resistance of the following connections while pressing the + button (on the button connections)**:
– Connection code **86G** of component **331**.
– Connection code **86M** of component **331**.

If the resistance is not approximately **300** Ω, check the continuity of the connection when the button is not pressed.
If there is continuity, replace the **"±"** control button.
If the connection or connections are faulty and there is a repair procedure (see **Technical Note 6015A**, **Electrical wiring repair, Wiring: Precautions for repair**), repair the wiring, otherwise replace it.

AFTER REPAIR	Carry out a road test followed by a check with the **diagnostic tool**.

GETtheMANUALS.org

ET703 CONTINUED 2	

DECREASE

Status **ET703** becomes **DECREASE** when the cruise control/speed limiter **-** button is pressed. This button is on the steering wheel, on the left-hand side.

If status **ET703** does not change to **DECREASE**, check the condition of the cruise control/speed limiter **±** button, and the condition of its connector. Repair if necessary.

To carry out the checks and measurements in complete safety, observe the recommendations for removing the driver's front airbag (see **MR 402 (Vel Satis ph2), MR 361 (Espace IV ph2) or MR 395 (Laguna II ph2) Mechanical, 88C, Airbag and pretensioners, Driver's front airbag, Removal – Refitting**).

Measure **the resistance of the following connections while pressing the "-" button (on the button connections)**:
– Connection code **86G** of component **331**.
– Connection code **86M** of component **331**.

If the resistance is not approximately **100** Ω check the continuity of the connection when the button is not pressed.
If there is continuity, replace the **"±"** control button.
If the connection or connections are faulty and there is a repair procedure (see **Technical Note 6015A**, **Electrical wiring repair, Wiring: Precautions for repair**), repair the wiring, otherwise replace it.

AFTER REPAIR	Carry out a road test followed by a check with the **diagnostic tool**.

GETtheMANUALS.org

ET703 CONTINUED 3	

SUSPEND	Status **ET703** becomes **SUSPEND** when the cruise control/speed limiter **0** button is pressed. This button is located on the steering wheel, to the right. If status **ET703** does not change to **SUSPEND**, check the condition of the cruise control/speed limiter **R/0** button, and the condition of its connector. To carry out the checks and measurements in complete safety, observe the recommendations for removing the driver's front airbag (see **MR 402 (Vel Satis ph2), MR 361 (Espace IV ph2) or MR 395 (Laguna II ph2) Mechanical, 88C, Airbag and pretensioners, Driver's front airbag, Removal – Refitting**). Measure **the resistance of the following connections while pressing the "0" button (on the button connections)**: – Connection code **86G** of component **331**. – Connection code **86M** of component **331**. If the resistance is not approximately **0** Ω, replace the **R/0** control button. If there is continuity, replace the **R/0** control button. If the connection or connections are faulty and there is a repair procedure (see **Technical Note 6015A**, **Electrical wiring repair, Wiring: Precautions for repair**), repair the wiring, otherwise replace it.

AFTER REPAIR	Carry out a road test followed by a check with the **diagnostic tool**.

GETtheMANUALS.org

ET703 CONTINUED 4	

RESUME	Status **ET703** becomes **RESUME** when the cruise control/speed limiter **R** button is pressed. This button is located on the steering wheel, to the right. If status **ET703** does not change to **RESUME**, check the condition of the cruise control/speed limiter **R/0** button and its connector. Repair if necessary. To carry out the checks and measurements in complete safety, observe the recommendations for removing the driver's front airbag (see **MR 402 (Vel Satis ph2), MR 361 (Espace IV ph2) or MR 395 (Laguna II ph2) Mechanical, 88C, Airbag and pretensioners, Driver's front airbag, Removal – Refitting**). Measure **the resistance of the following connections while pressing the "R" button (on the button connections)**: – Connection code **86G** of component **331**. – Connection code **86M** of component **331**. If the resistance is not approximately **900** Ω, check the continuity of the connection when the button is not pressed. If there is continuity, replace the **R/0** control button. If the connection or connections are faulty and there is a repair procedure (see **Technical Note 6015A**, **Electrical wiring repair, Wiring: Precautions for repair**), repair the wiring, otherwise replace it.

AFTER REPAIR	Carry out a road test followed by a check with the **diagnostic tool**.

GETtheMANUALS.org

ET704 **ET705**	BRAKE SWITCH NO. 1 BRAKE SWITCH NO. 2

STATUS DEFINITION	**ACTIVE:** This status indicates that the brake pedal is depressed. **INACTIVE:** This status indicates that the brake pedal is released.

NOTES	**Note:** Statuses **ET704** and **ET705** should change status at the same time. In the event of inconsistency, refer to the interpretation of fault **DF228 Brake signals**.
	Use the **Vel Satis ph2, Espace IV ph2, Laguna II ph2** wiring diagram Technical Note.

Conformity check with engine stopped and ignition on, or engine running, and engine coolant temperature > 80°C, without electrical consumers

ACTIVE	**Brake pedal depressed.** A brake signal non-conformity may cause the engine to race during gear changes. In the event of a fault, refer to the **"sensor electrical conformity"** section.
INACTIVE	**Brake pedal released.** A brake signal non-conformity may cause the engine to race during gear changes. In the event of a fault, refer to the **"sensor electrical conformity"** section.

AFTER REPAIR	Carry out a road test followed by a check with the **diagnostic tool**.

EDC16C36_V08_ET704/EDC16C36_V08_ET705/EDC16C36_V04_ET704/EDC16C36_V04_ET705

GETtheMANUALS.org

ET704 ET705 CONTINUED	

Sensor electrical conformity

"ACTIVE" or "INACTIVE"

If the brake lights are working:
check the **continuity and the absence of interference resistance** on the following connection:
– Connection code **5A** between components **160** and **120/645/119**.
If there is a repair procedure (see **Technical Note 6015A, Repairing electrical wiring, Wiring: Precautions for repair**) repair the wiring, otherwise replace it.
If the brake lights are not operational, check:
– the condition and fitting of the brake switch,
– the condition and conformity of the brake lights fuse.
– the conformity of the values in the following table:

	Continuity between connections	Insulation between connections
Switch engaged (Brake pedal released)	**5A and SP13**	**Laguna II ph2, Espace IV ph2, Vel Satis ph2 with ESP: 65A and AP10 Vel Satis ph2 without ESP: 65G and AP10**
Switch released (Brake pedal depressed)	**Laguna II ph2, Espace IV ph2, Vel Satis ph2 with ESP: 65A and AP10 Vel Satis ph2 without ESP: 65G and AP10**	**5A and SP13**

Replace the switch if the values obtained are not correct.

AFTER REPAIR	Carry out a road test followed by a check with the **diagnostic tool**.

GETtheMANUALS.org

ET706	STORED ENGINE STATUS NO. 1
ET707	STORED ENGINE STATUS NO. 2
ET708	STORED ENGINE STATUS NO. 3
ET709	STORED ENGINE STATUS NO. 4
ET710	STORED ENGINE STATUS NO. 5
ET711	STORED ENGINE STATUS NO. 6
ET712	STORED ENGINE STATUS NO. 7
ET713	STORED ENGINE STATUS NO. 8
ET714	STORED ENGINE STATUS NO. 9
ET715	STORED ENGINE STATUS NO. 10

STATUS DEFINITION	These statuses indicate the engine status in the event of a regeneration failure when driving.

NOTES	**Special notes:** These statuses should only be interpreted on **DF312 Speed request** if they are present or stored.

Conformity check with engine stopped and ignition on, or engine running, and engine coolant temperature > 80 °C

This status indicates the engine status in the event of a regeneration failure when driving:
NONE, + AFTER IGNITION FEED, RUNNING, **STOPPED**.

Each **STATUS** between **ET706** and **ET715** corresponds to the engine status during a regeneration failure for which the mileage is saved by **PR794 Stored regeneration failure No. 1** to **PR803 Stored regeneration failure No. 10** (for example, **PR797 Stored regeneration failure No. 4 is related to ET709 Stored engine status No. 4**).

AFTER REPAIR	Carry out a road test followed by a check with the **diagnostic tool**.

EDC16C36_V04_ET706/EDC16C36_V04_ET707/EDC16C36_V04_ET708/EDC16C36_V04_ET709/EDC16C36_V04_ET710
EDC16C36_V04_ET711/EDC16C36_V04_ET712/EDC16C36_V04_ET713/EDC16C36_V04_ET714/EDC16C36_V04_ET715
EDC16C36_V08_ET706/EDC16C36_V08_ET707/EDC16C36_V08_ET708/EDC16C36_V08_ET709/EDC16C36_V08_ET710
EDC16C36_V08_ET711/EDC16C36_V08_ET712/EDC16C36_V08_ET713/EDC16C36_V08_ET714/EDC16C36_V08_ET715

GETtheMANUALS.org

ET706 **ET707** **ET708** **ET709** **ET710** **ET711** **ET712** **ET713** **ET714** **ET715** **CONTINUED**	

RUNNING	If the **STATUS** is **RUNNING**, the regeneration failed because: – the customer's driving did not generate enough heat, – an engine management system component is defective.
STOPPED	If the **STATUS** is **STOPPED**, regeneration has failed due to the engine being switched off.
+ APC	POWER LATCH
NONE	No failed regeneration is present.

AFTER REPAIR	Carry out a road test followed by a check with the **diagnostic tool**.

GETtheMANUALS.org

ET742	STORED REGEN. REQUEST STATUS No. 1
ET743	STORED REGEN. REQUEST STATUS No. 2
ET744	STORED REGEN. REQUEST STATUS No. 3
ET745	STORED REGEN. REQUEST STATUS No. 4
ET746	STORED REGEN. REQUEST STATUS No. 5
ET747	STORED REGEN. REQUEST STATUS No. 6
ET748	STORED REGEN. REQUEST STATUS No. 7
ET749	STORED REGEN. REQUEST STATUS No. 8
ET750	STORED REGEN. REQUEST STATUS No. 9
ET751	STORED REGEN. REQUEST STATUS No. 10

STATUS DEFINITION	Statuses **ET742** to **ET751** correspond to the causes for the regeneration request. They are related to parameters **PR816 Stored regeneration start No. 1 to PR825 Stored regeneration start No. 10** which contains the stored mileage of the vehicle at the start of the regeneration. (For example, **PR745 Stored regeneration start No. 4** is related to **ET709 Stored regeneration request status No. 4**).

NOTES	**Special note:** These statuses should only be interpreted for **ALP7 Particle filter warning light comes on too frequently**.

Conformity check with engine stopped and ignition on, or engine running, and engine coolant temperature > 80 °C

STATUS 1	**Request by weight of soot**
	Regeneration has been requested after the maximum weight of soot has been reached and measured in the particle filter, without the particle filter warning light coming on.

STATUS 2	**Request by estimated weight of soot**
	Regeneration has been requested following an estimate of the maximum weight of soot in the particle filter, without the particle filter warning light coming on.

AFTER REPAIR	Carry out a road test followed by a check with the **diagnostic tool**.

EDC16C36_V04_ET742/EDC16C36_V04_ET743/EDC16C36_V04_ET744/EDC16C36_V04_ET745/EDC16C36_V04_ET746
EDC16C36_V04_ET747/EDC16C36_V04_ET748/EDC16C36_V04_ET749/EDC16C36_V04_ET750/EDC16C36_V04_ET751
EDC16C36_V08_ET742/EDC16C36_V08_ET743/EDC16C36_V08_ET744/EDC16C36_V08_ET745/EDC16C36_V08_ET746
EDC16C36_V08_ET747/EDC16C36_V08_ET748/EDC16C36_V08_ET749/EDC16C36_V08_ET750/EDC16C36_V08_ET751

GETtheMANUALS.org

ET742 **ET743** **ET744** **ET745** **ET746** **ET747** **ET748** **ET749** **ET750** **ET751** **CONTINUED**	

STATUS 3	**Request by distance travelled**
	Regeneration has been requested because the distance travelled since the last successful regeneration has reached the maximum authorised value (the particle filter warning light has not come on)

STATUS 4	**Request by number of regeneration failures or weight of soot**
	This status corresponds to the increase of **DF312 Speed request**. This corresponds to the maximum number of failed regeneration or to the maximum weight of soot in the particle filter, with the particle filter warning light coming on.

AFTER REPAIR	Carry out a road test followed by a check with the **diagnostic tool**.

GETtheMANUALS.org

Tool parameter	Diagnostic tool title
PR005	EGR valve opening setpoint
PR006	Rail pressure regulator current
PR007	Rail pressure regulator current setpoint
PR008	Rail reference pressure
PR009	Turbocharging pressure setpoint
PR015	Engine torque
PR017	Fuel flow
PR022	EGR valve position feedback loop difference
PR025	Mileage
PR030	Accelerator pedal position
PR035	Atmospheric pressure
PR037	Refrigerant pressure
PR038	Rail pressure
PR041	Turbocharging pressure
PR045	Power requested by heating elements
PR048	OCR* rail pressure regulation valve
PR051	EGR valve position feedback
PR053	Speed requested by air conditioning
PR054	Speed requested by heating elements
PR055	Engine speed
PR058	Air temperature
PR063	Fuel temperature
PR064	Coolant temperature
PR071	Computer feed voltage
PR073	Air flowmeter feed voltage
PR076	Refrigerant sensor voltage
PR077	EGR valve position sensor voltage
PR079	Atmospheric pressure sensor voltage

* OCR: Opening Cyclic Ratio

GETtheMANUALS.org

Tool parameter	Diagnostic tool title
PR080	Rail pressure sensor voltage
PR082	Fuel temperature sensor voltage
PR083	Air temperature sensor voltage
PR084	Coolant temperature sensor voltage
PR086	Pedal potentiometer voltage gang 1
PR088	Pedal potentiometer gang 2 voltage
PR089	Vehicle speed
PR104	Turbocharging SV* OCR* setpoint
PR128	First EGR valve offset
PR129	Last EGR valve offset
PR130	Cruise control setpoint
PR131	EGR air flow variation
PR132	Air flow
PR146	Inlet air flow
PR157	Fuel flow setpoint
PR168	Fuel flow restriction
PR171	Air flow setpoint for EGR
PR175	Vehicle speed/engine speed ratio
PR190	Engine idle speed setpoint
PR209	Turbocharging pressure loop difference
PR213	Rail pressure loop difference
PR215	Sensor supply voltage No. 1
PR216	Sensor supply voltage No. 2
PR224	Turbocharging pressure sensor voltage

* OCR: Opening Cyclic Ratio
* SV: solenoid valve

GETtheMANUALS.org

Tool parameter	Diagnostic tool title
PR358	Sensor reference voltage
PR364	Cylinder No. 1 fuel flow correction
PR365	Cylinder No. 4 fuel flow correction
PR371	Fault appearance counter
PR381	Particle filter downstream temperature
PR382	Particle filter upstream temperature
PR383	Weight of soot in the particle filter
PR385	Exhaust pipe flow
PR391	Mileage since particle filter replacement
PR405	Cylinder No. 2 fuel flow correction
PR406	Cylinder No. 3 fuel flow correction
PR412	Mileage at last successful regeneration
PR414	Particle filter diff*. pressure
PR415	Time since last regeneration
PR420	Damper valve error counter
PR635	Sensor supply voltage No. 3
PR667	Turbine upstream temperature
PR668	Turbine upstream temperature sensor voltage
PR669	Particle filter diff* press* sens* voltage
PR670	Particle filter upstream temp* sens* voltage
PR671	Particle filter downstream temp* sens* voltage
PR672	Damper valve position setpoint

* diff: differential
* temp: temperature
* sens: sensor
* press: pressure

GETtheMANUALS.org

Tool parameter	Diagnostic tool title
PR747	Damper valve position
PR754	Supplier No. 1 signal
PR777	Richness ratio sensor voltage
PR778	Richness ratio sensor temp*
PR779	Richness ratio
PR784	DF312 recording No. 1
PR785	DF312 recording No. 2
PR786	DF312 recording No. 3
PR787	DF312 recording No. 4
PR788	DF312 recording No. 5
PR789	DF312 recording No. 6
PR790	DF312 recording No. 7
PR791	DF312 recording No. 8
PR972	DF312 recording No. 9
PR793	DF312 recording No. 10
PR794	Stored regeneration failure No. 1
PR795	Stored regeneration failure No. 2
PR796	Stored regeneration failure No. 3
PR797	Stored regeneration failure No. 4
PR798	Stored regeneration failure No. 5
PR799	Stored regeneration failure No. 6

* temp: temperature

GETtheMANUALS.org

Tool parameter	Diagnostic tool title
PR800	Stored regeneration failure No. 7
PR801	Stored regeneration failure No. 8
PR802	Stored regeneration failure No. 9
PR803	Stored regeneration failure No. 10
PR816	No. 1 regeneration start recording
PR817	No. 2 regeneration start recording
PR818	No. 3 regeneration start recording
PR819	No. 4 regeneration start recording
PR820	No. 5 regeneration start recording
PR821	No. 6 regeneration start recording
PR822	No. 7 regeneration start recording
PR823	No. 8 regeneration start recording
PR824	No. 9 regeneration start recording
PR825	No. 10 regeneration start recording
PR848	Regeneration failure number
PR873	Oil oxidation signal
PR874	Last service
PR875	Oil dilution signal

GETtheMANUALS.org

PR005	EGR VALVE OPENING VALUE REQUIRED

PARAMETER DEFINITION	This parameter indicates a theoretical opening value for the EGR valve for optimum engine performance.

NOTES	None.

Conformity check with engine stopped and ignition on

The EGR valve theoretical opening value for operation with the engine stopped and ignition on is:
- 10 < PR005 < 0%

Conformity check with engine running, engine coolant temperature > 80°C, without electrical consumers

The theoretical EGR valve opening value for operation with the engine running and, engine coolant temperature **> 80°C** is **10 < PR005 < 40%**

AFTER REPAIR	Carry out a road test, then check with the **diagnostic tool**.

EDC16C36_V04_PR005/EDC16C36_V08_PR005

GETtheMANUALS.org

PR006	RAIL PRESSURE REGULATOR CURRENT

PARAMETER DEFINITION	This parameter indicates the current absorbed by the rail pressure regulator.

NOTES	None.

Conformity check with engine stopped and ignition on, or engine running, and engine coolant temperature > 80°C, without electrical consumers

This parameter indicates the current absorbed by the rail pressure regulator **PR006** ≈ **PR007 Rail pressure regulator current setpoint**.
In the event of a fault, consult the interpretation of fault **DF898 Rail pressure regulator circuit**.

AFTER REPAIR	Carry out a road test, then check with the **diagnostic tool**.

EDC16C36_V04_PR006/EDC16C36_V08_PR006

GETtheMANUALS.org

PR007	RAIL PRESSURE REGULATOR CURRENT SETPOINT

PARAMETER DEFINITION	This parameter indicates the theoretical current absorbed by the rail pressure regulator.

NOTES	None.

Conformity check with engine stopped and ignition on, or engine running, and engine coolant temperature > 80°C, without electrical consumers

This parameter indicates the theoretical current absorbed by the rail pressure regulator.

AFTER REPAIR	Carry out a road test, then check with the **diagnostic tool**.

EDC16C36_V04_PR007/EDC16C36_V08_PR007

GETtheMANUALS.org

PR008	RAIL REFERENCE PRESSURES

PARAMETER DEFINITION	This parameter indicates the theoretical rail pressure value for optimum engine operation in bar.

NOTES	None.

Conformity check with engine stopped and ignition on, or engine running, and engine coolant temperature > 80°C, without electrical consumers

The theoretical rail pressure value is a setpoint of **PR008 = 250 ± 50 bar**

AFTER REPAIR	Carry out a road test, then check with the **diagnostic tool**.

EDC16C36_V04_PR008/EDC16C36_V08_PR008

GETtheMANUALS.org

PR009	TURBOCHARGING PRESSURE SETPOINT

PARAMETER DEFINITION	This parameter indicates the theoretical turbocharging pressure setpoint value in **bar**.

NOTES	None.

Conformity check with engine stopped and ignition on, or engine running, and engine coolant temperature > 80°C, without electrical consumers

The theoretical turbocharging pressure setpoint value is **PR009** ≈ **1 bar**

AFTER REPAIR	Carry out a road test, then check with the **diagnostic tool**.

EDC16C36_V04_PR009/EDC16C36_V08_PR009

GETtheMANUALS.org

PR015	ENGINE TORQUE

PARAMETER DEFINITION	This parameter indicates the engine torque in **Nm**.

NOTES	None.

Engine running, engine coolant temperature > 80°C, with no electrical consumers

The value must be between **20 < PR015 < 40 Nm**
This parameter is only valid when the engine is running.

AFTER REPAIR	Carry out a road test, then check with the **diagnostic tool**.

EDC16C36_V04_PR015/EDC16C36_V08_PR015

GETtheMANUALS.org

PR017	CURRENT SETPOINT

PARAMETER DEFINITION	This parameter indicates the fuel flow in **mg/st**.

NOTES	None.

Conformity check with engine stopped and ignition on

Ignition on: 0.0 mg/st.
If there is a fault, refer to the interpretation of fault **DF643 Rail pressure regulator circuit**.

Conformity check with engine stopped and ignition on, or engine running, and engine coolant temperature > 80°C, without electrical consumers

Engine running: PR017 = PR157: Fuel flow setpoint.
If there is a fault, refer to the interpretation of fault **DF643 Rail pressure regulator circuit**.

AFTER REPAIR	Carry out a road test, then check with the **diagnostic tool**.

EDC16C36_V04_PR017/EDC16C36_V08_PR017

GETtheMANUALS.org

PR022	EGR VALVE POSITION FEEDBACK LOOP DIFFERENCE

PARAMETER DEFINITION	This parameter indicates the percentage difference between the setpoint and the EGR valve position.

NOTES	None.

Conformity check with engine stopped and ignition on

This parameter indicates the percentage difference between the setpoint and the EGR valve position.
In the event of a fault, consult the interpretation of faults **DF209 EGR valve position sensor circuit** and **DF647 EGR valve position regulation**.

Conformity check with engine stopped and ignition on, or engine running, and engine coolant temperature > 80°C, without electrical consumers

PR022 = ± 5%
In the event of a fault, consult the interpretation of faults **DF209 EGR valve position sensor circuit** and **DF647 EGR valve position regulation**.

AFTER REPAIR	Carry out a road test, then check with the **diagnostic tool**.

EDC16C36_V04_PR022/EDC16C36_V08_PR022

GETtheMANUALS.org

PR030	ACCELERATOR PEDAL POSITION

PARAMETER DEFINITION	This parameter indicates the accelerator pedal position as a percentage.

NOTES	**There must be no present or stored faults.** Perform this fault finding procedure: – after finding an inconsistency in the parameter, – after a customer complaint (e.g. lack of power).
	Use the **Vel Satis ph2, Espace IV ph2, Laguna II ph2** wiring diagram Technical Note.

Conformity check with engine stopped and ignition on, or engine running, and engine coolant temperature > 80°C, without electrical consumers

If no pressure is being applied to the pedal PR030 = 0%
In the event of a fault, consult the interpretation of **DF196 Pedal sensor circuit gang 1** or **DF198 Pedal sensor circuit gang 2**.

Sensor electrical conformity

Check the **continuity and absence of interference resistance** of the following connections:
– connection code **3LR**,
– connection code **3LS**,
– connection code **3LT**,
– connection code **3LU**,
– connection code **3LW**,
– connection code **3LV**,
– between components **120** and **921**.
If the connection or connections are faulty and there is a repair procedure (see **Technical Note 6015A, Electrical wiring repair, Wiring: Precautions for repair**), repair the wiring, otherwise replace it.

Pedal sensor **connected**, vehicle with **ignition on and engine stopped**:
– check the value of **PR030**:
0% no load,
100% full load,
138% full load after kickdown point on pedal.
– if the value is not correct, replace the pedal sensor.

AFTER REPAIR	Carry out a road test, then check with the **diagnostic tool**.

EDC16C36_V04_PR030/EDC16C36_V08_PR030

GETtheMANUALS.org

PR035	ATMOSPHERIC PRESSURE

PARAMETER DEFINITION	This parameter indicates the atmospheric pressure in bar; the sensor is integrated in the computer.

NOTES	None.

Conformity check with engine stopped and ignition on, or engine running, and engine coolant temperature > 80°C, without electrical consumers

The atmospheric pressure value is **PR035** ≈ **1 bar ± 0.20 bar**
In the event of a fault, consult the interpretation of fault **DF200 Atmospheric pressure sensor**.

AFTER REPAIR	Carry out a road test, then check with the **diagnostic tool**.

EDC16C36_V04_PR035/EDC16C36_V08_PR035

GETtheMANUALS.org

PR037	REFRIGERANT PRESSURE

PARAMETER DEFINITION	This parameter indicates the pressure in the air conditioning circuit. It changes according to the air conditioning system operating mode.

NOTES	None.

Engine running, engine coolant temperature > 80°C, with no electrical consumers

The value must be between **1 < PR037 < 40 bar**
In the event of a fault, carry out a multiplex network test (**see 88B, Multiplexing**).

AFTER REPAIR	Carry out a road test, then check with the **diagnostic tool**.

EDC16C36_V04_PR037/EDC16C36_V08_PR037

GETtheMANUALS.org

PR038	RAIL PRESSURE

PARAMETER DEFINITION	This parameter indicates the rail pressure in **bar**.

NOTES	**There must be no present or stored faults.** Perform this fault finding procedure: – after finding an inconsistency in the parameter, – after a customer complaint (starting faults, poor performance, stalling etc.), – after an interpretation of command **AC011 Rail pressure regulator**.
	Use the **Vel Satis ph2, Espace IV ph2, Laguna II ph2** wiring diagram Technical Note.

Conformity check with engine stopped and ignition on

The rail pressure value is **0 < PR038 < 90 bar if the Coolant temperature < 30°C**
In the event of a fault, consult the interpretation of fault **DF007 Rail pressure sensor circuit**.

Conformity check with engine stopped and ignition on, or engine running, and engine coolant temperature > 80°C, without electrical consumers

The rail pressure value at idle speed is: **PR038 = 270 bar ± 20 bar**
Full load: **PR038 = 1700 bar ± 20 bar**
In the event of a fault, consult the interpretation of fault **DF007 Rail pressure sensor circuit**.

AFTER REPAIR	Carry out a road test, then check with the **diagnostic tool**.

EDC16C36_V04_PR038/EDC16C36_V08_PR038

GETtheMANUALS.org

PR038 CONTINUED	

Sensor electrical conformity

Check the condition of the rail pressure sensor connector.
Check the condition of the engine management computer connector.
If one of the connectors is faulty and there is a repair procedure (see **Technical Note 6015A, Electrical wiring repair, wiring: precautions for repair**), repair the connector, otherwise replace the wiring.
Check the **continuity** and absence of **interference resistance** of the following connections:
– connection code **3LX**,
– connection code **3LY**,
– connection code **3LZ**,
between components **120** and **1032**.
If the connection or connections are faulty and there is a repair procedure (see **Technical Note 6015A, Electrical wiring repair, Wiring: Precautions for repair**), repair the wiring, otherwise replace it.

Check that there are no external diesel leaks from the high pressure fuel circuit.
With the ignition on and the engine stopped for over **1 minute**:
View parameter **PR038 Rail pressure**.
– If the pressure is below **90 bar**, the sensor is in order.
– If the pressure is above **90 bar**, contact the Techline.

AFTER REPAIR	Carry out a road test, then check with the **diagnostic tool**.

GETtheMANUALS.org

PR041	TURBOCHARGING PRESSURE

PARAMETER DEFINITION	This parameter indicates the turbocharging pressure in **mbar**.

NOTES	Use the **Vel Satis ph2, Espace IV ph2, Laguna II ph2** wiring diagram Technical Note.

Conformity check with engine stopped and ignition on, or engine running, and engine coolant temperature > 80°C, without electrical consumers

The turbocharging pressure value is **PR041 = PR035 ± 200 mbar**
In the event of a problem, refer to the sensor electrical conformity.

Sensor electrical conformity

Check the **continuity** and absence of **interference resistance** of the following connections:
– connection code **3LQ**,
– connection code **3LP**,
– connection code **3LN**.
between components **120** and **1071**.
If the connection or connections are faulty and there is a repair procedure (see **Technical Note 6015A, Electrical wiring repair, Wiring: Precautions for repair**), repair the wiring, otherwise replace it.

AFTER REPAIR	Carry out a road test, then check with the **diagnostic tool**.

EDC16C36_V04_PR041/EDC16C36_V08_PR041

GETtheMANUALS.org

PR041 CONTINUED	

Vehicle with ignition on, and the engine stopped for over 1 minute:
Compare the values of **PR041 Turbocharging pressure** and **PR035 Atmospheric pressure**.
If the difference between **PR041** and **PR035** is greater than **200 mbar**, check the value of **PR035** by comparing it with the reading on a conforming vehicle in the workshop.

If the value of **PR035** is not correct (a difference of over **200 mbar** between the 2 vehicles), contact the Techline.

Otherwise (when the value of **PR035** is correct), replace the turbocharger pressure sensor.
If the difference between **PR041** and **PR035** is less than **200 mbar**, carry out the following actions

Start the engine, with the engine idling:
Compare the values of **PR041** and **PR035**.

If the difference between **PR041** and **PR035** is greater than **200 mbar, check the air inlet circuit**:
Check that the **low** and **high pressure** air circuit is **sealed** and **free from blockages**: ducts, mounting clips present and tightened, mounting of turbocharger pressure sensor, exchanger, etc.
Check that the damper valve is not jammed closed.

Repair if necessary.

AFTER REPAIR	Carry out a road test, then check with the **diagnostic tool**.

GETtheMANUALS.org

PR045	POWER REQUESTED BY HEATING ELEMENTS

PARAMETER DEFINITION	This parameter indicates the power consumed by the heating elements in **watts**.

NOTES	**Special note:** **Only on Vel Satis ph2 and Laguna II ph2.**

Engine running, engine coolant temperature > 80°C, with no electrical consumers

0 < PR045 < 1200 W
If the parameter value is not within this range, consult the interpretation of faults:
– DF032 "Heating element 1 relay control circuit",
– DF033 "Heating element 2 relay control circuit",
– DF034 "Heating element 3 relay control circuit".

Engine stopped, ignition on

PR045 = 0 W
In the event of a fault, refer to the interpretation of faults:
– DF032 "Heating element 1 relay control circuit",
– DF033 "Heating element 2 relay control circuit",
– DF034 "Heating element 3 relay control circuit".

AFTER REPAIR	Carry out a road test, then check with the **diagnostic tool**.

EDC16C36_V04_PR045/EDC16C36_V08_PR045

GETtheMANUALS.org

PR048	RAIL PRESSURE REGULATION VALVE OCR*

PARAMETER DEFINITION	This parameter indicates the turbocharger pressure opening cyclic ratio in **%**.

NOTES	None.

Engine running, engine coolant temperature > 80°C, with no electrical consumers

The value must be **between 35 < PR048 < 45%**
In the event of a fault, consult the interpretation of fault **DF007 Rail pressure sensor circuit**.

Engine stopped, ignition on

The value should be **PR048 = 15%**
In the event of a fault, consult the interpretation of faults **DF007 "Rail pressure sensor circuit" and DF053 "Rail pressure regulation function"**.

* OCR: Opening cyclic ratio

AFTER REPAIR	Carry out a road test, then check with the **diagnostic tool**.

EDC16C36_V04_PR048/EDC16C36_V08_PR048

GETtheMANUALS.org

PR051	EGR VALVE POSITION FEEDBACK

PARAMETER DEFINITION	This parameter indicates the EGR valve opening ratio.

NOTES	**There must be no present or stored faults.** Perform this fault finding procedure: – after finding an inconsistency in the parameter, – after a customer complaint (loss of power, smoke etc.), – after the interpretation of command **AC103 EGR by-pass**
	Use the **Vel Satis ph2, Espace IV ph2, Laguna II ph2** wiring diagram Technical Note.

Conformity check with engine stopped and ignition on, or engine running, and engine coolant temperature > 80°C, without electrical consumers

This parameter indicates the EGR valve opening ratio.
In the event of a fault, consult the interpretation of faults **DF209 EGR valve position sensor circuit** and **DF647 EGR valve position regulation**.

Sensor electrical conformity

Check the **continuity** and absence of **interference resistance** of the following connections:
– connection code **3JM**,
– connection code **3EL**,
– connection code **3GC**,
between components **120** and **1460**.
If the connection or connections are faulty and there is a repair procedure (see **Technical Note 6015A, Electrical wiring repair, Wiring: Precautions for repair**), repair the wiring, otherwise replace it.

If the fault is still present, contact the Techline

AFTER REPAIR	Carry out a road test, then check with the **diagnostic tool**.

EDC16C36_V04_PR051/EDC16C36_V08_PR051

GETtheMANUALS.org

PR053	SPEED REQUESTED BY HEATING/AIR CONDITIONING

PARAMETER DEFINITION	This parameter indicates the engine's speed of rotation with air conditioning in **rpm**.

NOTES	None.

Conformity check with engine stopped and ignition on

Indicates the rotation speed of the engine with air conditioning: **0 rpm**.

Conformity check with engine stopped and ignition on, or engine running, and engine coolant temperature > 80°C

The engine speed requested by the air conditioning is increased and fluctuates around **850 rpm**.

AFTER REPAIR	Carry out a road test, then check with the **diagnostic tool**.

EDC16C36_V04_PR053/EDC16C36_V08_PR053

GETtheMANUALS.org

PR055	ENGINE SPEED

PARAMETER DEFINITION	This parameter indicates the engine's rotational speed in **rpm**.

NOTES	None.

Conformity check with engine stopped and ignition on

With the ignition on the value is **0 rpm**.
In the event of a fault, consult the interpretation of faults **DF195 Engine speed/camshaft sensor consistency, DF119 Camshaft sensor signal** and **DF120 Engine speed sensor signal**.

Conformity check with engine stopped and ignition on, or engine running, and engine coolant temperature > 80°C, without electrical consumers

With the engine running at idle speed, the value is approximately **800 rpm**.
In the event of a fault, consult the interpretation of faults **DF195 Engine speed/camshaft sensor consistency, DF119 Camshaft sensor signal** and **DF120 Engine speed sensor signal**.

AFTER REPAIR	Carry out a road test, then check with the **diagnostic tool**.

EDC16C36_V04_PR055/EDC16C36_V08_PR055

GETtheMANUALS.org

PR058	AIR TEMPERATURE

PARAMETER DEFINITION	This parameter indicates the air inlet temperature in **°C**.

NOTES	**There must be no present or stored faults.** Perform this fault finding procedure: – after finding an inconsistency in the parameter, – after a customer complaint (e.g. lack of power).
	Use the **Vel Satis ph2, Espace IV ph2, Laguna II ph2** wiring diagram Technical Note.

Conformity check with engine stopped and ignition on

With the ignition on the inlet air temperature varies according to the exterior temperature.
Default value: 20°C
In the event of a fault, consult the interpretation of fault **DF002 Air temperature sensor circuit**.
The parameter **PR058** ≈ **PR064 Coolant temperature** cold engine.

Conformity check with engine running, engine coolant temperature > 80°C, without electrical consumers

With the engine running at idle speed the inlet air temperature varies according to the engine coolant temperature.
Default value: 20°C
In the event of a fault, consult the interpretation of fault **DF002 Air temperature sensor circuit**.

Sensor electrical conformity

With the flow sensor disconnected, check the **insulation** from **earth** of the following connection:
– connection code **3ABQ** between components **120** and **799**.
Check the **+ 12 V after relay feed** to the air flowmeter.
– connection **3FB** of component **799**
If the connection or connections are faulty and there is a repair procedure (see **Technical Note 6015A, Electrical wiring repair, Wiring: Precautions for repair**), repair the wiring, otherwise replace it.

Measure the **resistance** between connections **3ABQ** and **3DW** of component **799**.
Replace the air flowmeter if the resistance is not between **100** Ω and **40 k**Ω.

AFTER REPAIR	Carry out a road test, then check with the **diagnostic tool**.

EDC16C36_V04_PR058/EDC16C36_V08_PR058

GETtheMANUALS.org

PR063	FUEL TEMPERATURE

PARAMETER DEFINITION	This parameter indicates the fuel temperature in **°C**.

NOTES	**There must be no present or stored faults.** Perform this fault finding procedure: – after finding an inconsistency in the parameter, – after a customer complaint (e.g. lack of power).
	Use the **Vel Satis ph2, Espace IV ph2, Laguna II ph2** wiring diagram Technical Note.

Conformity check with engine stopped and ignition on, or engine running, and engine coolant temperature > 80°C, without electrical consumers

This parameter indicates the fuel temperature: **- 30°C < PR063 < 90°C**
Default value: **100°C**
In the event of a fault, consult the interpretation of fault **DF098 Fuel temperature sensor circuit**.

Sensor electrical conformity

Check the **continuity** and absence of **interference resistance** of the following connections:
– connection code **3FAB**,
– connection code **3LD**,
between components **120** and **1066**.
If the connection or connections are faulty and there is a repair procedure (see **Technical Note 6015A, Electrical wiring repair, Wiring: Precautions for repair**), repair the wiring, otherwise replace it.

Measure the **resistance** between connections **3FAB** and **3LD** of component **1066**.
Replace the sensor if the resistance is not approximately:
3820 Ω ± 282 Ω at + 10°C
2050 Ω ± 123 Ω at + 25°C
810 Ω ± 47 Ω at + 50°C

AFTER REPAIR	Carry out a road test, then check with the **diagnostic tool**.

EDC16C36_V04_PR063/EDC16C36_V08_PR063

GETtheMANUALS.org

PR064	COOLANT TEMPERATURE

PARAMETER DEFINITION	This parameter indicates the engine coolant temperature in **°C**.

NOTES	**There must be no present or stored faults.** Perform this fault finding procedure: – after finding an inconsistency in the parameter, – after a customer complaint (e.g. lack of power).
	Use the **Vel Satis ph2, Espace IV ph2, Laguna II ph2** wiring diagram Technical Note.

Conformity check with engine stopped and ignition on

With the ignition on the coolant temperature varies according to the exterior temperature.
In the event of a fault, consult the interpretation of fault **DF001 Coolant temperature sensor circuit.**
Parameter **PR058 Air temperature** ≈ **PR064** with the engine cold.

Conformity check with engine stopped and ignition on, or engine running, and engine coolant temperature > 80°C, without electrical consumers

With the engine running at idle speed the coolant temperature varies according to the engine temperature.
In the event of a fault, refer to the interpretation of **DF001 Coolant temperature sensor circuit**.

AFTER REPAIR	Carry out a road test, then check with the **diagnostic tool**.

EDC16C36_V04_PR064/EDC16C36_V08_PR064

GETtheMANUALS.org

PR064 CONTINUED	

Sensor electrical conformity

Check the **continuity** and absence of **interference resistance** of the following connections:
– connection code **3C**,
– connection code **3JK**,
between components **120** and **244**.
If the connection or connections are faulty and there is a repair procedure (see **Technical Note 6015A, Electrical wiring repair, Wiring: Precautions for repair**), repair the wiring, otherwise replace it.

Measure the **resistance** between connections **3C** and **3JK** of component **244**.
Replace the sensor if the resistance is not:
12460 Ω ± 1128 Ω at - 10°C
2252 Ω ± 112 Ω at + 25°C
811 Ω ± 39 Ω at + 50°C
283 Ω ± 8 Ω at + 80°C
115 Ω ± 3 Ω at + 110°C

AFTER REPAIR	Carry out a road test, then check with the **diagnostic tool**.

GETtheMANUALS.org

PR071	COMPUTER SUPPLY VOLTAGE

PARAMETER DEFINITION	This parameter indicates the computer supply voltage in **volts**.

NOTES	None.

Conformity check with engine stopped and ignition on, or engine running, and engine coolant temperature > 80°C, without electrical consumers

The voltage must be between **9 V < PR071 < 16 V**
In the event of a fault, carry out a fault finding procedure on the charging circuit and refer to the interpretation for **DF047 Computer supply voltage**.

AFTER REPAIR	Carry out a road test, then check with the **diagnostic tool**.

EDC16C36_V04_PR071/EDC16C36_V08_PR071

GETtheMANUALS.org

PR073	AIR FLOWMETER FEED VOLTAGE

PARAMETER DEFINITION	This parameter indicates the air flowmeter feed voltage in **volts**.

NOTES	None.

Conformity check with engine stopped and ignition on

0 < PR073 < 2.5 V
Default value: **0 V**
In the event of a fault, refer to the interpretation of fault **DF013 Sensor feed voltage No. 3**.

Engine running, engine coolant temperature > 80°C, with no electrical consumers

1.5 < PR073 < 3.5V
Default value: **0 V**
In the event of a fault, refer to the interpretation of fault **DF013 Sensor feed voltage No. 3**.

AFTER REPAIR	Carry out a road test, then check with the **diagnostic tool**.

EDC16C36_V04_PR073/EDC16C36_V08_PR073

GETtheMANUALS.org

PR076	REFRIGERANT SENSOR VOLTAGE

PARAMETER DEFINITION	This parameter indicates the refrigerant sensor voltage.

NOTES	None.

Conformity check with engine stopped and ignition on, or engine running, and engine coolant temperature > 80°C, without electrical consumers

0 V ≤ PR076 ≤ 5 V
Carry out fault finding on the climate control computer (see **62B, Climate control**).

AFTER REPAIR	Carry out a road test, then check with the **diagnostic tool**.

EDC16C36_V04_PR076/EDC16C36_V08_PR076

GETtheMANUALS.org

PR077	EGR VALVE POSITION SENSOR VOLTAGE

PARAMETER DEFINITION	This parameter indicates the EGR valve position sensor voltage in **volts**.

NOTES	None.

Conformity check with engine stopped and ignition on

0 < PR077 < 1.5 V
Default value: **0 V**
In the event of a fault, refer to the interpretation of fault **DF012 Sensor feed voltage No. 2**.

Engine running, engine coolant temperature > 80°C, with no electrical consumers

0 < PR077 < 5 V
Default value: **0 V**
In the event of a fault, refer to the interpretation of fault **DF012 Sensor feed voltage No. 2**.

AFTER REPAIR	Carry out a road test, then check with the **diagnostic tool**.

EDC16C36_V04_PR077/EDC16C36_V08_PR077

GETtheMANUALS.org

PR079	ATMOSPHERIC PRESSURE SENSOR VOLTAGE

PARAMETER DEFINITION	This parameter indicates the atmospheric pressure sensor voltage in **volts**.

NOTES	None.

Conformity check with engine stopped and ignition on, or engine running, and engine coolant temperature > 80°C, without electrical consumers

0 V < PR079 < 5 V
In the event of a fault, consult the interpretation of faults **DF011 Sensor supply voltage No. 1, DF012 Sensor supply voltage No. 2 and DF013 Sensor supply voltage No. 3**.

AFTER REPAIR	Carry out a road test, then check with the **diagnostic tool**.

EDC16C36_V04_PR079/EDC16C36_V08_PR079

GETtheMANUALS.org

PR080	RAIL PRESSURE SENSOR VOLTAGE

PARAMETER DEFINITION	This parameter indicates the rail pressure sensor voltage in **volts**.

NOTES	None.

Conformity check with engine stopped and ignition on, or engine running, and engine coolant temperature > 80°C, without electrical consumers

0 V < PR080 < 5 V
In the event of a fault, refer to the interpretation of fault **DF013 Sensor feed voltage No. 3**.

AFTER REPAIR	Carry out a road test, then check with the **diagnostic tool**.

EDC16C36_V04_PR080/EDC16C36_V08_PR080

GETtheMANUALS.org

PR082	FUEL TEMPERATURE SENSOR VOLTAGE

PARAMETER DEFINITION	This parameter indicates the fuel temperature sensor voltage in **volts**.

NOTES	None.

Conformity check with engine stopped and ignition on, or engine running, and engine coolant temperature > 80°C, without electrical consumers

0 V < PR082 < 5 V
In the event of a fault, consult the interpretation of fault **DF098 Fuel temperature sensor circuit**.

AFTER REPAIR	Carry out a road test, then check with the **diagnostic tool**.

EDC16C36_V04_PR082/EDC16C36_V08_PR082

GETtheMANUALS.org

PR083	AIR TEMPERATURE SENSOR VOLTAGE

PARAMETER DEFINITION	This parameter indicates the air temperature sensor voltage in **volts**.

NOTES	None.

Conformity check with engine stopped and ignition on, or engine running, and engine coolant temperature > 80°C, without electrical consumers

0 V < PR083 < 5 V
In the event of a fault, consult the interpretation of faults **DF011 Sensor supply voltage No. 1, DF012 Sensor supply voltage No. 2 and DF013 Sensor supply voltage No. 3**.

AFTER REPAIR	Carry out a road test, then check with the **diagnostic tool**.

EDC16C36_V04_PR083/EDC16C36_V08_PR083

GETtheMANUALS.org

PR084	COOLANT TEMPERATURE SENSOR VOLTAGE

PARAMETER DEFINITION	This parameter indicates the coolant temperature sensor voltage in **volts**.

NOTES	None.

Conformity check with engine stopped and ignition on, or engine running, and engine coolant temperature > 80°C, without electrical consumers

0 V < PR084 < 5 V
In the event of a fault, refer to the interpretation of **DF001 Coolant temperature sensor circuit**.

AFTER REPAIR	Carry out a road test, then check with the **diagnostic tool**.

EDC16C36_V04_PR084/EDC16C36_V08_PR084

GETtheMANUALS.org

PR086	PEDAL POTENTIOMETER GANG 1 VOLTAGE

PARAMETER DEFINITION	This parameter indicates the pedal potentiometer gang 1 voltage in **volts**.

NOTES	None.

Conformity check with engine stopped and ignition on, or engine running, and engine coolant temperature > 80°C, without electrical consumers

Accelerator pedal released: **0.70 V < PR086 < 0.80 V**

AFTER REPAIR	Carry out a road test, then check with the **diagnostic tool**.

EDC16C36_V04_PR086/EDC16C36_V08_PR086

GETtheMANUALS.org

PR088	PEDAL POTENTIOMETER GANG 2 VOLTAGE

PARAMETER DEFINITION	This parameter indicates the pedal potentiometer gang 2 voltage in **volts**.

NOTES	None.

Conformity check with engine stopped and ignition on, or engine running, and engine coolant temperature > 80°C, without electrical consumers

Accelerator pedal released: **0.30 V < PR088 < 0.40 V**

AFTER REPAIR	Carry out a road test, then check with the **diagnostic tool**.

EDC16C36_V04_PR088/EDC16C36_V08_PR088

GETtheMANUALS.org

PR089	VEHICLE SPEED

PARAMETER DEFINITION	Gives the vehicle speed in **mph (km/h)**.

NOTES	This parameter is transmitted by the ABS computer. This signal is transmitted to the injection on the multiplex network.

Conformity check with engine stopped and ignition on, or engine running, and engine coolant temperature > 80°C, without electrical consumers

In the event of a fault, carry out a multiplex network test (see **88B, Multiplexing**).
And then complete fault finding on the ABS computer (see **38C, Anti-lock braking system**).

AFTER REPAIR	Carry out a road test, then check with the **diagnostic tool**.

EDC16C36_V04_PR089/EDC16C36_V08_PR089

GETtheMANUALS.org

PR128	FIRST EGR VALVE OFFSET

PARAMETER DEFINITION	This parameter indicates the EGR valve closing ratio for the first EGR valve offset.

NOTES	None.

Conformity check with engine stopped and ignition on, or engine running, and engine coolant temperature > 80°C, without electrical consumers

Indicates the percentage ≈ 20%.
PR128 ≈ PR129 Last EGR valve offset, these 2 values should be similar.
In the event of a fault, consult the interpretation of faults **DF209 EGR valve position sensor circuit** and **DF647 EGR valve position regulation**.

AFTER REPAIR	Carry out a road test, then check with the **diagnostic tool**.

EDC16C36_V04_PR128/EDC16C36_V08_PR128

GETtheMANUALS.org

PR129	LAST EGR VALVE OFFSET

PARAMETER DEFINITION	This parameter indicates the EGR valve closing ratio for the last EGR valve offset.

NOTES	None.

Conformity check with engine stopped and ignition on, or engine running, and engine coolant temperature > 80°C, without electrical consumers

Indicates the percentage ≈ 20%.
PR128 First EGR valve offset ≈ PR129, these 2 values should be similar.
In the event of a fault, consult the interpretation of faults **DF209 EGR valve position sensor circuit** and **DF647 EGR valve position regulation**.

AFTER REPAIR	Carry out a road test, then check with the **diagnostic tool**.

EDC16C36_V04_PR129/EDC16C36_V08_PR129

GETtheMANUALS.org

PR130	CRUISE CONTROL SETPOINT

PARAMETER DEFINITION	This parameter indicates the cruise control setpoint.

NOTES	**No faults must be present.** Perform this fault finding procedure: – after finding an inconsistency in the parameter, – or after a customer complaint (lack of power, smoke etc.).

Conformity check with engine stopped and ignition on, or engine running, and engine coolant temperature > 80°C, without electrical consumers

Indicates the cruise control cruising speed.
Cruise control can only be activated for a speed greater than **18 mph (30 km/h)**.

AFTER REPAIR	Carry out a road test, then check with the **diagnostic tool**.

EDC16C36_V04_PR130/EDC16C36_V08_PR130

GETtheMANUALS.org

PR131	EGR AIR FLOW DIFFERENCE

PARAMETER DEFINITION	This parameter indicates the EGR air flow difference.

NOTES	None.

Conformity check with engine stopped and ignition on, or engine running, and engine coolant temperature > 80°C, without electrical consumers

PR131 EGR air flow difference = PR146 - PR171
The value of **PR131 EGR air flow difference** should be the closest to **0**.
In the event of a fault, consult the interpretation for fault **DF056 Air flow sensor circuit**.

AFTER REPAIR	Carry out a road test, then check with the **diagnostic tool**.

EDC16C36_V04_PR131/EDC16C36_V08_PR131

GETtheMANUALS.org

PR132	AIR FLOW

PARAMETER DEFINITION	This parameter indicates the inlet air flow in **kg/h**.

NOTES	**No faults must be present.** Perform this fault finding procedure: – after finding an inconsistency in the parameter, – or after a customer complaint (lack of power, smoke etc.).

Conformity check with engine stopped and ignition on

Indicates the inlet air flow **PR132 = 0 kg/h**

Conformity check with engine stopped and ignition on, or engine running, and engine coolant temperature > 80°C, without electrical consumers

Indicates the inlet air flow **PR132 ≈ 60 kg/h**

AFTER REPAIR	Carry out a road test, then check with the **diagnostic tool**.

EDC16C36_V04_PR132/EDC16C36_V08_PR132

GETtheMANUALS.org

PR132 CONTINUED	

Sensor electrical conformity

Check the air inlet circuit from the air filter inlet to the inlet manifold, running **test 3 Turbocharged air inlet circuit check**:
– air filter unit inlet not blocked and filter not clogged,
– **visual inspection only, apply test 3** of **ALP2 Starting fault or starting impossible**,
– oil vapour recirculation circuit connection conformity.
– **absence of leaks or blockages** in the **low** and **high pressure** air circuits: pipes, presence and tightness of the mounting clips, mounting of the turbocharger pressure sensor, intercooler, etc.
– check that the damper valve is not jammed closed.

Carry out the necessary repairs.

Check **the electrical conformity of the air flowmeter**:
Check the **+ 5 V feed** to the air flowmeter.
– connection **3KJ** of component **799**.

Check the **+ 12 V after relay feed** to the air flowmeter.
– connection **3FB** of component **799**

Check the **continuity and absence of interference resistance** of the following connections:
– connection code **3DV**,
– connection code **3DW**,
between components **120** and **799**.

With the flowmeter **connected, the vehicle ignition on**, and **engine stopped**:
Check the voltage between connections **3DW** and **3DV** of component **799**.
– Replace the air flowmeter if the voltage is not between **0.3 V** and **0.7 V**.

AFTER REPAIR	Carry out a road test, then check with the **diagnostic tool**.

GETtheMANUALS.org

PR146	INLET AIR FLOW

PARAMETER DEFINITION	This parameter indicates the flow of air entering the engine in **mg/st**.

NOTES	None.

Conformity check with engine stopped and ignition on

This parameter indicates the air flow entering the engine **PR146 = 0 mg/st**
In the event of a fault, consult the interpretation for fault **DF056 Air flow sensor circuit**.

Engine running, engine coolant temperature > 80°C, with no electrical consumers

This parameter indicates the air flow entering the engine.
In the event of a fault, consult the interpretation for fault **DF056 Air flow sensor circuit**.

AFTER REPAIR	Carry out a road test, then check with the **diagnostic tool**.

EDC16C36_V04_PR146/EDC16C36_V08_PR146

GETtheMANUALS.org

PR157	FUEL FLOW SETPOINT

PARAMETER DEFINITION	This parameter indicates the fuel flow setpoint in **mg/st**.

NOTES	None.

Conformity check with engine stopped and ignition on

Ignition on PR157 = 0 mg/st.
In the event of a fault, refer to the interpretation of fault **DF643 Rail pressure regulator circuit**.

Conformity check with engine stopped and ignition on, or engine running, and engine coolant temperature > 80°C, without electrical consumers

Engine running: PR017: Fuel flow = PR157.
In the event of a fault, refer to the interpretation of fault **DF643 Rail pressure regulator circuit**.

AFTER REPAIR	Carry out a road test, then check with the **diagnostic tool**.

EDC16C36_V04_PR157/EDC16C36_V08_PR157

GETtheMANUALS.org

PR171	AIR FLOW SETPOINT FOR EGR

PARAMETER DEFINITION	This parameter indicates the flow of air required by the EGR valve in **mg/st.**

NOTES	None.

Conformity check with engine stopped and ignition on, or engine running, and engine coolant temperature > 80°C, without electrical consumers

Indicates the air flow required by the EGR valve

AFTER REPAIR	Carry out a road test, then check with the **diagnostic tool**.

EDC16C36_V04_PR171/EDC16C36_V08_PR171

GETtheMANUALS.org

PR190	IDLE SPEED SETPOINT

PARAMETER DEFINITION	This parameter indicates the engine's rotational speed in **rpm**.

NOTES	None.

Conformity check with engine stopped and ignition on

Ignition on **PR190 = 0 rpm**
In the event of a fault, consult the interpretation of faults **DF195 Camshaft/engine speed sensor consistency, DF119 Camshaft sensor signal** and **DF120 Engine speed sensor signal**.

Conformity check with engine stopped and ignition on, or engine running, and engine coolant temperature > 80°C, without electrical consumers

With the engine running at idle speed, the value of **PR190** is approximately **800 rpm**
In the event of a fault, consult the interpretation of faults **DF195 Camshaft/engine speed sensor consistency, DF119 Camshaft sensor signal** and **DF120 Engine speed sensor signal**.
The difference between the engine idle speed **PR055** and its setpoint **PR190** must be less than **50 rpm**.

AFTER REPAIR	Carry out a road test, then check with the **diagnostic tool**.

EDC16C36_V04_PR190/EDC16C36_V08_PR190

GETtheMANUALS.org

PR209	TURBOCHARGING PRESSURE LOOP DIFFERENCE

PARAMETER DEFINITION	This parameter indicates the turbocharging pressure loop difference in **bar**.

NOTES	None.

Conformity check with engine running, engine coolant temperature > 80°C, without electrical consumers

PR209 Turbocharging pressure loop difference = PR009 - PR041 = ~ 0
If **PR209** is significant, apply the interpretation of command **AC004 Turbocharging solenoid valve**.

AFTER REPAIR	Carry out a road test, then check with the **diagnostic tool**.

EDC16C36_V04_PR209/EDC16C36_V08_PR209

GETtheMANUALS.org

PR213	RAIL PRESSURE LOOP DIFFERENCE

PARAMETER DEFINITION	This parameter indicates the rail pressure loop difference in **bar**.

NOTES	None.

Conformity check with engine stopped and ignition on, or engine running, and engine coolant temperature > 80°C, without electrical consumers

PR213 Rail pressure loop difference = PR008 - PR038
In the event of a fault, consult the interpretation of fault **DF007 Rail pressure sensor circuit**.

AFTER REPAIR	Carry out a road test, then check with the **diagnostic tool**.

EDC16C36_V04_PR213/EDC16C36_V08_PR213

GETtheMANUALS.org

PR224	TURBOCHARGING PRESSURE SENSOR VOLTAGE

PARAMETER DEFINITION	This parameter indicates the turbocharging pressure sensor voltage in **volts**.

NOTES	None.

Conformity check with engine stopped and ignition on, or engine running, and engine coolant temperature > 80°C, without electrical consumers

0 V < PR224 < 5 V
In the event of a fault, consult the interpretation of faults **DF011 Sensor supply voltage no. 1, DF012 Sensor supply voltage no. 2**, and **DF013 Sensor supply voltage no. 3**.

AFTER REPAIR	Carry out a road test, then check with the **diagnostic tool**.

EDC16C36_V04_PR224/EDC16C36_V08_PR224

GETtheMANUALS.org

PR358	SENSOR REFERENCE VOLTAGE

PARAMETER DEFINITION	This parameter indicates the reference voltage of the sensors in **volts**.

NOTES	None.

Conformity check with engine stopped and ignition on, or engine running, and engine coolant temperature > 80°C

The sensor reference voltage must be between **3.4 V < PR358 < 3.8 V**

AFTER REPAIR	Carry out a road test, then check with the **diagnostic tool**.

EDC16C36_V04_PR358/EDC16C36_V08_PR358

GETtheMANUALS.org

PR364	CYLINDER NO. 1 FUEL FLOW CORRECTION

PARAMETER DEFINITION	This parameter indicates the cylinder's fuel flow correction in **mg/st**.

NOTES	None.

Conformity check with engine stopped and ignition on

PR364 = 0.0 mg/st.
In the event of a fault, consult **Test 7 Poor injector operation**.

Conformity check with engine stopped and ignition on, or engine running, and engine coolant temperature > 80°C, without electrical consumers

- 5 mg/st < PR364 < 5 mg/st.
In the event of a fault, consult **Test 7 Poor injector operation**.

AFTER REPAIR	Carry out a road test, then check with the **diagnostic tool**.

EDC16C36_V04_PR364/EDC16C36_V08_PR364

GETtheMANUALS.org

PR365	CYLINDER NO. 4 FUEL FLOW CORRECTION

PARAMETER DEFINITION	This parameter indicates the cylinder's fuel flow correction in **mg/st**.

NOTES	None.

Conformity check with engine stopped and ignition on

PR365 = 0.0 mg/st.
In the event of a fault, consult **Test 7 Poor injector operation**.

Conformity check with engine stopped and ignition on, or engine running, and engine coolant temperature > 80°C, without electrical consumers

- 5 mg/st < PR365 < 5 mg/st.
In the event of a fault, consult **Test 7 Poor injector operation**.

AFTER REPAIR	Carry out a road test, then check with the **diagnostic tool**.

EDC16C36_V04_PR365/EDC16C36_V08_PR365

GETtheMANUALS.org

PR381	PARTICLE FILTER DOWNSTREAM TEMPERATURE

PARAMETER DEFINITION	This parameter indicates the exhaust gas air temperature downstream of the particle filter in **°C**.

NOTES	None.

Conformity check with engine stopped and ignition on, or engine running, and engine coolant temperature > 80°C, without electrical consumers

PR381 ≈ PR382 Particle filter upstream temperature ≈ ± 200°C
In the event of a fault, consult the interpretation of faults **DF309 "Particle filter downstream temp.* sensor" and DF310 "Particle filter temp. sensor.**

*temp: temperature

AFTER REPAIR	Carry out a road test, then check with the **diagnostic tool**.

EDC16C36_V04_PR381/EDC16C36_V08_PR381

GETtheMANUALS.org

PR382	PARTICLE FILTER UPSTREAM TEMPERATURE

PARAMETER DEFINITION	This parameter indicates the exhaust gas air temperature upstream of the particle filter in **°C**.

NOTES	None.

Conformity check with engine stopped and ignition on, or engine running, and engine coolant temperature > 80°C, without electrical consumers

PR382 ≈ 200°C
In the event of a fault, consult the interpretation of faults **DF309 "Particle filter downstream temp.* sensor"** and **DF310 "Particle filter temp. sensor.**

*temp: temperature

AFTER REPAIR	Carry out a road test, then check with the **diagnostic tool**.

EDC16C36_V04_PR382/EDC16C36_V08_PR382

GETtheMANUALS.org

PR383	WEIGHT OF SOOT IN PARTICLE FILTER

PARAMETER DEFINITION	This parameter indicates the weight of soot contained in the particle filter in **g**.

NOTES	None.

Conformity check with engine stopped and ignition on, or engine running, and engine coolant temperature > 80°C, without electrical consumers

PR383 < 70 g.
If the weight is greater than 70 g carry out an After-Sales regeneration.
Before this, check that there are no leaks or blockages in the exhaust pipe,
Repair if necessary.
Run command **SC017 Particle filter regeneration** and follow the procedure (see **Interpretation of commands**).
In the event of a fault, consult the interpretation of **DF315 Particle filter diff. pressure sensor**.

* diff: differential

AFTER REPAIR	Carry out a road test, then check with the **diagnostic tool**.

EDC16C36_V04_PR383/EDC16C36_V08_PR383

GETtheMANUALS.org

PR385	EXHAUST PIPE FLOW

PARAMETER DEFINITION	This parameter indicates the exhaust pipe flow in **m^3/h**.

NOTES	None.

Conformity check with engine stopped and ignition on

Stationary **PR385 = 0 m^3/h**

Conformity check with engine running, engine coolant temperature > 80°C, without electrical consumers

20 m^3/h < PR385 < 80 m^3/h

AFTER REPAIR	Carry out a road test, then check with the **diagnostic tool**.

EDC16C36_V04_PR385/EDC16C36_V08_PR385

GETtheMANUALS.org

PR391	DISTANCE SINCE PARTICLE FILTER REPLACEMENT

PARAMETER DEFINITION	This parameter indicates the distance travelled since particle filter replacement in **miles (kms)**.

NOTES	None.

Conformity check with engine stopped and ignition on, or engine running, and engine coolant temperature > 80°C, without electrical consumers

Indicates the mileage since the particle filter was replaced.

AFTER REPAIR	Carry out a road test, then check with the **diagnostic tool**.

EDC16C36_V04_PR391/EDC16C36_V08_PR391

GETtheMANUALS.org

PR405	CYLINDER NO. 2 FUEL FLOW CORRECTION

PARAMETER DEFINITION	This parameter indicates the cylinder's fuel flow correction in **mg/st**.

NOTES	None.

Conformity check with engine stopped and ignition on

PR405 = 0.0 mg/st.
In the event of a fault, consult **Test 7 Poor injector operation**.

Conformity check with engine stopped and ignition on, or engine running, and engine coolant temperature > 80°C, without electrical consumers

- 5 mg/st < PR405 < 5 mg/st.
In the event of a fault, consult **Test 7 Poor injector operation**.

AFTER REPAIR	Carry out a road test, then check with the **diagnostic tool**.

EDC16C36_V04_PR405/EDC16C36_V08_PR405

GETtheMANUALS.org

PR406	CYLINDER NO. 3 FUEL FLOW CORRECTION

PARAMETER DEFINITION	This parameter indicates the cylinder's fuel flow correction in **mg/st**.

NOTES	None.

Conformity check with engine stopped and ignition on

PR406 = 0.0 mg/st.
In the event of a fault, consult **Test 7 Poor injector operation**.

Conformity check with engine running, engine coolant temperature > 80°C, without electrical consumers

- 5 mg/st < PR406 < 5 mg/st.
In the event of a fault, consult **Test 7 Poor injector operation**.

AFTER REPAIR	Carry out a road test, then check with the **diagnostic tool**.

EDC16C36_V04_PR406/EDC16C36_V08_PR406

GETtheMANUALS.org

PR412	DISTANCE VALUE AT LAST SUCCESSFUL REGENERATION

PARAMETER DEFINITION	This parameter indicates the vehicle's mileage at the last successful regeneration in **miles (kms)**.

NOTES	None.

Conformity check with engine stopped and ignition on, or engine running, and engine coolant temperature > 80°C, without electrical consumers

This parameter indicates the vehicle's mileage at the last successful regeneration.

AFTER REPAIR	Carry out a road test, then check with the **diagnostic tool**.

EDC16C36_V04_PR412/EDC16C36_V08_PR412

GETtheMANUALS.org

PR414	PARTICLE FILTER PRESSURE SENSOR

PARAMETER DEFINITION	This parameter indicates the particle filter differential pressure in **mbar**.

NOTES	None.

Conformity check with engine stopped and ignition on

PR414 = 0 ± 1 mbar
In the event of a fault, consult the interpretation of **DF315 Particle filter diff. pressure sensor**.

Conformity check with engine running, engine coolant temperature > 80°C, without electrical consumers

10 mbar < PR414 < 100 mbar
In the event of a fault, refer to the interpretation of fault **DF315 Particle filter diff* pressure sensor**.

* diff: differential

AFTER REPAIR	Carry out a road test, then check with the **diagnostic tool**.

EDC16C36_V04_PR414/EDC16C36_V08_PR414

GETtheMANUALS.org

PR415	TIME SINCE LAST REGENERATION

PARAMETER DEFINITION	This parameter indicates the time since the last regeneration in **hours**.

NOTES	None.

Conformity check with engine stopped and ignition on, or engine running, and engine coolant temperature > 80°C, without electrical consumers

Time counter since last regeneration (in hours).

AFTER REPAIR	Carry out a road test, then check with the **diagnostic tool**.

EDC16C36_V04_PR415/EDC16C36_V08_PR415

GETtheMANUALS.org

PR420	DAMPER VALVE ERROR COUNTER

PARAMETER DEFINITION	This parameter indicates the number of damper valve errors.

NOTES	None.

Conformity check with engine stopped and ignition on, or engine running, and engine coolant temperature > 80°C, without electrical meter

PR420 = 0
In the event of a fault, refer to the interpretation of fault **DF226 Damper valve circuit**.

AFTER REPAIR	Carry out a road test, then check with the **diagnostic tool**.

EDC16C36_V04_PR420/EDC16C36_V08_PR420

GETtheMANUALS.org

PR667	TURBINE UPSTREAM TEMPERATURE

PARAMETER DEFINITION	This parameter indicates the turbine upstream temperature in **°C**.

NOTES	None.

Conformity check with engine stopped and ignition on, or engine running, and engine coolant temperature > 80°C, without electrical consumers

Indicates the turbine upstream air temperature in **°C**, **PR667** ≈ **200°C**.
In the event of a fault, refer to the interpretation of fault **DF652 Turbine upstream temperature sensor circuit**.

AFTER REPAIR	Carry out a road test, then check with the **diagnostic tool**.

EDC16C36_V04_PR667/EDC16C36_V08_PR667

GETtheMANUALS.org

PR668	TURBINE UPSTREAM TEMPERATURE SENSOR VOLTAGE

PARAMETER DEFINITION	This parameter indicates the turbine upstream temperature sensor voltage in **volts**.

NOTES	None.

Conformity check with engine stopped and ignition on, or engine running, and engine coolant temperature > 80°C, without electrical consumers

PR668 ≈ 5 V
In the event of a fault, refer to the interpretation of fault **DF652 Turbine upstream temperature sensor circuit**.

AFTER REPAIR	Carry out a road test, then check with the **diagnostic tool**.

EDC16C36_V04_PR668/EDC16C36_V08_PR668

GETtheMANUALS.org

PR672	DAMPER VALVE POSITION SETPOINT

PARAMETER DEFINITION	This parameter indicates the damper valve position setpoint as a **%**.

NOTES	None.

Conformity check with engine stopped and ignition on, or engine running, and engine coolant temperature > 80°C, without electrical consumers

PR672 < 5%
In the event of a fault, refer to the interpretation of fault **DF226 Damper valve circuit**.

AFTER REPAIR	Carry out a road test, then check with the **diagnostic tool**.

EDC16C36_V04_PR672/EDC16C36_V08_PR672

GETtheMANUALS.org

PR747	DAMPER VALVE POSITION

PARAMETER DEFINITION	This parameter indicates the damper valve position as a percentage.

NOTES	None.

Conformity check with engine stopped and ignition on

When stopped PR747 = 0%
In the event of a fault, consult the interpretation for fault **DF226 Damper valve circuit**.

Conformity check with engine stopped and ignition on, or engine running, and engine coolant temperature > 80°C, without electrical consumers

At idle speed PR747 ≈ 5%
In the event of a fault, consult the interpretation for fault **DF226 Damper valve circuit**.

AFTER REPAIR	Carry out a road test, then check with the **diagnostic tool**.

EDC16C36_V04_PR747/EDC16C36_V08_PR747

GETtheMANUALS.org

PR777	RICHNESS RATIO SENSOR VOLTAGE

PARAMETER DEFINITION	This parameter indicates the richness ratio sensor voltage.

NOTES	None.

Conformity check with engine stopped and ignition on

PR777 = 0 ± 0.1 V
In the event of a fault, refer to the interpretation of fault **DF967 Richness ratio sensor circuit**.

Conformity check with engine running, engine coolant temperature > 80°C, without electrical consumers

PR777 = 2 ± 0.1 V
In the event of a fault, refer to the interpretation of fault **DF967 Richness ratio sensor circuit**.

AFTER REPAIR	Carry out a road test, then check with the **diagnostic tool**.

EDC16C36_V04_PR777/EDC16C36_V08_PR777

GETtheMANUALS.org

PR778	RICHNESS RATIO SENSOR TEMP.*

PARAMETER DEFINITION	This parameter indicates the richness ratio sensor temperature.

NOTES	None.

Conformity check with engine stopped and ignition on, or engine running, and engine coolant temperature > 80°C, without electrical consumers

PR778 ≈ 780°C
In the event of a fault, refer to the interpretation of fault **DF970 Richness ratio sensor heating circuit**.

*temp: temperature

AFTER REPAIR	Carry out a road test, then check with the **diagnostic tool**.

EDC16C36_V04_PR778/EDC16C36_V08_PR778

GETtheMANUALS.org

PR779	RATIO SENSOR RICHNESS

PARAMETER DEFINITION	This parameter indicates the ratio sensor richness.

NOTES	None.

Conformity check with engine stopped and ignition on

PR779 ≈ 1
In the event of a fault, refer to the interpretation of fault **DF980 Richness ratio sensor function**.

Conformity check with engine running, engine coolant temperature > 80°C, without electrical consumers

0.20 < PR779 < 0.40
In the event of a fault, refer to the interpretation of fault **DF980 Richness ratio sensor function**.

AFTER REPAIR	Carry out a road test, then check with the **diagnostic tool**.

EDC16C36_V04_PR779/EDC16C36_V08_PR779

GETtheMANUALS.org

PR784	DF312 RECORD NO. 1
PR785	DF312 RECORD NO. 2
PR786	DF312 RECORD NO. 3
PR787	DF312 RECORD NO. 4
PR788	DF312 RECORD NO. 5
PR789	DF312 RECORD NO. 6
PR790	DF312 RECORD NO. 7
PR791	DF312 RECORD NO. 8
PR792	DF312 RECORD NO. 9
PR793	DF312 RECORD NO. 10

PARAMETER DEFINITION	These parameters are shown in **Km**.

NOTES	**Special notes:** These parameters must only be interpreted for **DF312 Speed request** if it is present or stored.

Conformity check with engine stopped and ignition on, or engine running, and engine coolant temperature > 80°C, without electrical consumers

In the event of a fault, consult the interpretation of fault **DF312 Speed request**.

These parameters are used for looking up the history of the last ten particle filter warning light activations

Each parameter from **PR784 to PR793** records the vehicle's mileage upon activation of the particle filter warning light, with which the appearance of **DF312 Speed request** is associated.
Each time the particle filter warning light comes on, the vehicle mileage is stored in the following parameter (PR+1).

When all ten parameters have a value other than zero, and the particle filter warning light illuminates again, the mileage information for **PR784 DF312 record no. 1** is cleared and replaced by the new value.

AFTER REPAIR	Carry out a road test, then check with the **diagnostic tool**.

EDC16C36_V04_PR784/EDC16C36_V08_PR784/EDC16C36_V04_PR785/EDC16C36_V08_PR785/EDC16C36_V04_PR786/
EDC16C36_V08_PR786/EDC16C36_V04_PR787/EDC16C36_V08_PR787/EDC16C36_V04_PR788/EDC16C36_V08_PR788/
EDC16C36_V04_PR789/EDC16C36_V08_PR789/EDC16C36_V04_PR790/EDC16C36_V08_PR790/EDC16C36_V04_PR791/
EDC16C36_V08_PR791/EDC16C36_V04_PR792/EDC16C36_V08_PR792/EDC16C36_V04_PR793/EDC16C36_V08_PR793

GETtheMANUALS.org

PR794	REGENERATION FAILURE RECORD NO. 1
PR795	REGENERATION FAILURE RECORD NO. 2
PR796	REGENERATION FAILURE RECORD NO. 3
PR797	REGENERATION FAILURE RECORD NO. 4
PR798	REGENERATION FAILURE RECORD NO. 5
PR799	REGENERATION FAILURE RECORD NO. 6
PR800	REGENERATION FAILURE RECORD NO. 7
PR801	REGENERATION FAILURE RECORD NO. 8
PR802	REGENERATION FAILURE RECORD NO. 9
PR803	REGENERATION FAILURE RECORD NO. 10

PARAMETER DEFINITION	These parameters are shown in **Km**.

NOTES	**Special notes:** These parameters must only be interpreted for **DF312 Speed request** if it is present or stored.

Conformity check with engine stopped and ignition on, or engine running, and engine coolant temperature > 80°C, without electrical consumers

These parameters are used so that the history of the last ten failed regenerations when driving is known.

Each of these parameters contains the vehicle mileage during a failed particle filter regeneration when driving. each parameter relates to an engine status. The statuses and parameters are recorded at the same time (for example, **PR797 Stored regeneration failure no. 4 is related to ET709 Stored engine status no. 4**).

Each new recorded value is saved under the next PR (PR+1).

When all ten parameters have a value other than zero, and a regeneration failure when driving occurs, the mileage signal for **PR794 Regeneration failure record No.1** is cleared and replaced with the new value.

AFTER REPAIR	Carry out a road test, then check with the **diagnostic tool**.

EDC16C36_V04_PR794/EDC16C36_V08_PR794/EDC16C36_V04_PR795/EDC16C36_V08_PR795/EDC16C36_V04_PR796/
EDC16C36_V08_PR796/EDC16C36_V04_PR797/EDC16C36_V08_PR797/EDC16C36_V04_PR798/EDC16C36_V08_PR798/
EDC16C36_V04_PR799/EDC16C36_V08_PR799/EDC16C36_V04_PR800/EDC16C36_V08_PR800/EDC16C36_V04_PR801/
EDC16C36_V08_PR801/EDC16C36_V04_PR802/EDC16C36_V08_PR802/EDC16C36_V04_PR803/EDC16C36_V08_PR803

GETtheMANUALS.org

PR816	REGENERATION START RECORD NO. 1
PR817	REGENERATION START RECORD NO. 2
PR818	REGENERATION START RECORD NO. 3
PR819	REGENERATION START RECORD NO. 4
PR820	REGENERATION START RECORD NO. 5
PR821	REGENERATION START RECORD NO. 6
PR822	REGENERATION START RECORD NO. 7
PR823	REGENERATION START RECORD NO. 8
PR824	REGENERATION START RECORD NO. 9
PR825	REGENERATION START RECORD NO. 10

PARAMETER DEFINITION	These parameters are shown in **Km**.

NOTES	**Special notes:** These parameters must only be interpreted using **ALP7 Particle filter warning light comes on too often**.

Conformity check with engine stopped and ignition on, or engine running, and engine coolant temperature > 80°C, without electrical consumers

These parameters are used so that the history of the last ten regeneration starts when driving can be found.

Each parameter between **PR816** and **PR825** contains the vehicle distance stored when particle filter regeneration starts when driving. Each parameter is associated with a "Regeneration request status record" status. They are recorded simultaneously (for example **PR819 Regeneration start record no. 4 is associated with ET745 Regeneration request status record no. 4).**

Each new recorded value is saved under the next PR (PR+1).
When all ten parameters have a value other than zero, and a new regeneration starts when driving, the mileage signal for **PR816 Regeneration start record No.1** is cleared and replaced with the new value.

AFTER REPAIR	Carry out a road test, then check with the **diagnostic tool**.

EDC16C36_V04_PR816/EDC16C36_V08_PR816/EDC16C36_V04_PR817/EDC16C36_V08_PR817/EDC16C36_V04_PR818/
EDC16C36_V08_PR818/EDC16C36_V04_PR819/EDC16C36_V08_PR819/EDC16C36_V04_PR820/EDC16C36_V08_PR820/
EDC16C36_V04_PR821/EDC16C36_V08_PR821/EDC16C36_V04_PR822/EDC16C36_V08_PR822/EDC16C36_V04_PR823/
EDC16C36_V08_PR823/EDC16C36_V04_PR824/EDC16C36_V08_PR824/EDC16C36_V04_PR825/EDC16C36_V08_PR825

GETtheMANUALS.org

PR848	NUMBER OF REGENERATION FAILURES

PARAMETER DEFINITION	This parameter indicates the number of regeneration failures.

NOTES	None.

Conformity check with engine stopped and ignition on, or engine running, and engine coolant temperature > 80°C, without electrical consumers

This parameter indicates the number of failed regenerations when driving.

AFTER REPAIR	Carry out a road test, then check with the **diagnostic tool**.

EDC16C36_V04_PR848/EDC16C36_V08_PR848

GETtheMANUALS.org

PR873	OIL OXIDATION SIGNAL

PARAMETER DEFINITION	This parameter indicates the distance of the vehicle when the oil dilution threshold is reached.

NOTES	This parameter should only be interpreted if the **OCS (Oil Control System)** program is activated on the instrument panel. On the instrument panel computer, check the configuration reading **LC106 O.C.S**: **WITH**

Conformity check with engine stopped and ignition on, or engine running, and engine coolant temperature > 80°C, without electrical consumers

The oil condition is calculated by the oxidation program in the injection computer, according to the number of engine revolutions.
When this count reaches a certain threshold before the end of the oil service period, the injection computer sends a signal to the instrument panel, which will display **service due**. Parameter **PR873** corresponds to the vehicle mileage at the time this signal is sent.
Then the instrument panel computer deducts **900 miles (1500 km)** before displaying the message **Service required**.

IMPORTANT
When the message **Service due** appears on the instrument panel, the customer must have the oil changed within the remaining **900 miles (1500 km)**.

AFTER REPAIR	Carry out a road test, then check with the **diagnostic tool**.

EDC16C36_V04_PR873/EDC16C36_V08_PR873

GETtheMANUALS.org

PR874	LAST SERVICE

PARAMETER DEFINITION	This parameter indicates the vehicle mileage the last time a service was carried out. It is updated when the oil service parameters are reinitialised in the instrument panel.

NOTES	None.

AFTER REPAIR	Carry out a road test, then check with the **diagnostic tool**.

EDC16C36_V04_PR874/EDC16C36_V08_PR874

GETtheMANUALS.org

PR875	OIL DILUTION SIGNAL

PARAMETER DEFINITION	This parameter indicates the vehicle mileage when the oil dilution threshold is reached.

NOTES	This parameter should only be interpreted if the **OCS (Oil Control System)** program is activated on the instrument panel. On the instrument panel computer, check the configuration reading **LC106 O.C.S**: **WITH.**

Conformity check with engine stopped and ignition on, or engine running, and engine coolant temperature > 80°C, without electrical consumers

The injection computer estimates the degree of engine oil dilution according to the customer's driving style.
When the dilution level reaches a certain threshold before the end of the oil change interval, the injection computer sends a signal to the instrument panel which then displays **Service required**. Parameter **PR875** corresponds to the vehicle mileage at the time this signal is sent.

IMPORTANT
When the message **service required** appears on the instrument panel, the customer must carry out an oil service immediately to prevent damage to their engine.

AFTER REPAIR	Carry out a road test, then check with the **diagnostic tool**.

EDC16C36_V04_PR875/EDC16C36_V08_PR875

GETtheMANUALS.org

Tool command	Diagnostic tool title
SC001	Write saved data
SC002	Enter injector codes
SC003	Save computer data
SC017	Particle filter regeneration
SC036	Reinitialise programming
RZ001	Fault memory
RZ005	Programming
RZ034	Computer memory
LC009	Air conditioning
LC056	Thermoplungers
LC065	Water in diesel fuel sensor
LC120	Cruise control
LC121	Speed limiter
AC004	Turbocharging solenoid valve
AC011	Rail pressure regulator
AC012	Damper valve
AC031	Thermoplunger No. 3 relay
AC037	Preheating relay
AC038	Low speed fan assembly relay
AC039	High speed fan assembly relay
AC063	Thermoplunger No. 1 relay
AC064	Thermoplunger No. 2 relay
AC103	EGR by-pass
AC231	Richness ratio sensor heating
VP010	Enter VIN
VP036	Fuel supply inhibited
VP037	Lift fuel supply inhibition

GETtheMANUALS.org

SC001	WRITE SAVED DATA

NOTES	To use this command, first save the data with the **SC003 Save computer data** command. The writing is carried out after the computer has been reprogrammed or replaced. **Ignition on and engine stopped.**

Validating this command writes the data saved using command **SC003 Save computer data**.

The data is as follows:
– injector codes,
– the egr valve data programming;
– options available on the vehicle and managed by the computer (e.g. air conditioning);
– specific data related to the operation of the particle filter.

This data will configure the computer and will prevent:
– engine malfunction after (re)programming or replacing the computer;
– faulty interpretation of information provided by the **CLIP tool**.

AFTER REPAIR	Repeat the conformity check from the start.

EDC16C36_V04_SC001/EDC16C36_V08_SC001

GETtheMANUALS.org

SC002	ENTER INJECTOR CODES

NOTES	This command is run after replacing the injectors and only if the vehicle is IMA configured (**ET104 Injector code use** is **YES**). If this command is not run, fault **DF276 Injector code programming** will be present. Ignition on and engine stopped.

WARNING
The letters **J and Q**, and figures **0 and 9** are **not used in IMA coding**.
If these characters are used the entry will be **invalid**.
Cylinder no. 1 is the cylinder located at the engine flywheel end.

Procedure to be followed:
– Read the **7-character** alphanumeric codes engraved on the upper section of the injector body.
– Use command **SC002**.
– Select the cylinder number for the cylinder concerned in the **Desired**, column, then confirm.
– Enter the injector code noted for the cylinder.
– Enter the new codes for each cylinder, then confirm.
– When the command is completed, the modified codes appear in the **Current** column.
– Check that the codes correspond to those read earlier.
– If the codes entered appear in neither the **Current** column nor the **Desired** column, check the codes read and make sure that the data has been entered correctly.

The possible confusions are:
– **the figure "1" with the letter "I" and "L"**,
– **the figure "2" with the letter "Z"**,
– **the figure "5" with the letter "S"**,
– **the figure "6" with the letter "G"**,
– **the figure "8" with the letter "B"**.
– Exit fault finding mode.
– Switch off the ignition and wait for the **diagnostic tool** message (maximum time **8 minutes**): **Communication lost with computer: EDC16C36, check the tool connection and computer supply**.
– Switch the ignition back on and check for faults.

AFTER REPAIR	Repeat the conformity check from the start.

EDC16C36_V04_SC002/EDC16C36_V08_SC002

GETtheMANUALS.org

SC002 CONTINUED	ENTER INJECTOR CODES

DF276 Injector code programming should be stored.
If fault **DF276** is still present, the command has not been performed correctly.
Start the procedure again and follow the instructions.
If the codes are still not recognised, check that the computer has correctly entered standby mode, switch off the ignition and wait for **the diagnostic tool** message (maximum time **8 minutes**): **Communication lost with computer: EDC16C36, check the tool connection and computer supply**.
If the warning light is flashing or constantly lit when the ignition is switched off, the computer has not entered standby mode, and the command will be ignored.

If all these checks still do not enable the command to be confirmed, contact the Techline.

AFTER REPAIR	Repeat the conformity check from the start.

GETtheMANUALS.org

SC003	SAVE COMPUTER DATA

NOTES	This save is performed before reprogramming or replacing the computer. **Ignition on and engine stopped.**

Select in the CLIP tool, scenario **SC003.**
If the following message appears:
"**a saved file exists, do you want to overwrite this data?**":
*(this file corresponds to the last save made on the **diagnostic tool**)*
select **"YES"**.

Confirming this command saves the following vehicle-specific data:
– injector codes,
– the egr valve data programming;
– options available on the vehicle and managed by the computer (e.g. air conditioning);
– specific data related to the operation of the particle filter.

This information will be saved in **the CLIP tool**.

After saving has finished, use the command **SC001 Enter saved data** to be able to set the new computer parameters, after programming and reprogramming.

AFTER REPAIR	Repeat the conformity check from the start.

EDC16C36_V04_SC003/EDC16C36_V08_SC003

GETtheMANUALS.org

SC017	PARTICLE FILTER REGENERATION

NOTES	Only run this command after interpretation of the following faults: – **DF308 Clogged particle filter,** – **DF311 Failed regenerations limit exceeded** – **DF312 Speed request**

WARNING
Always observe the health and safety regulations (see MR 402 (Vel Satis ph2), MR 361 (Espace IV ph2) or MR 395 (Laguna II ph2) Mechanical, 19B Exhaust, Particle filter: Cleaning).

Safety instructions to be followed:
The regeneration causes exhaust fumes and high temperatures.
The vehicle must be outside during regeneration.
If it is not possible to carry out regeneration outside, use an extractor fan that can withstand the very high regeneration temperatures **(400°C at the exhaust outlet)**.

Perform regeneration on a surface free from fire risks (oil, dry leaves, etc.). **Nothing should be left in the vicinity of the exhaust pipe.**

Check that there are no leaks or blockages in the exhaust pipe,
Repair if necessary.

Check the engine oil level before running the command to avoid any engine racing. The oil level should be between the minimum and below the maximum levels.
Before performing particle filter regeneration, always switch off all of the electrical consumers (heating and air conditioning system, de-icing, etc.)

If necessary:
Regeneration can be stopped by briefly pressing the vehicle start button twice (less than **3 seconds**).
Switch off the ignition and wait for the **diagnostic tool** message (maximum time **8 minutes**): **Communication lost with computer: EDC16C36, check the tool connection and computer supply**. before switching on the ignition again.

AFTER REPAIR	Repeat the conformity check from the start.

EDC16C36_V04_SC017/EDC16C36_V08_SC017

GETtheMANUALS.org

SC017 CONTINUED 1	

Procedure to be followed:
To run this command, select the command mode on the **diagnostic tool** and run command **SC017**.

When regeneration is complete, a message will indicate whether regeneration was successful, and what operations need to be carried out **(filter replacement, whether an oil service is required, etc.).**

DESCRIPTION OF THE PROCESS
Particle filter regeneration takes place in 3 stages (values given as a guide only):
– **Heating phase**: the engine speed is fixed or fluctuating around **2000 rpm**.
– This phase lasts at least between **3 and 5 minutes**, until the coolant temperature exceeds **60°C**.
– **Regeneration phase**: the engine speed is fixed or varies around **1750 rpm**. Engine injection is retarded. The exhaust fumes rise in temperature and burn the soot retained in the particle filter. The **particle filter downstream temperature** measurement starts after the **particle filter upstream temperature** measurement due to the volume of the particle filter. Then the combustion of the soot stored in the particle filter causes the **particle filter downstream temperature** to increase, possibly reaching more than **700°C** depending on the amount of soot in the filter (with a **particle filter upstream temperature** of around **600°C**). This phase lasts between **20** and **25 minutes**.
– **Cooling phase**: the engine speed is fixed or fluctuating around **1750 rpm**.
Engine injection returns to normal and the exhaust gases cool the particle filter.
This phase lasts **5 minutes**.

The procedure lasts at least **30 minutes**, and varies depending on the time taken to reach a coolant temperature of **60°C**.

AFTER REPAIR	Repeat the conformity check from the start.

GETtheMANUALS.org

SC017 CONTINUED 2	

VALIDATING THE REGENERATION PROCESS:

At the end of regeneration, a message appears to announce whether the regeneration was successful or not:

- **Particle filter regeneration successful**: regeneration completed correctly. Change the engine oil if a message on the **CLIP diagnostic tool** requests it.
- **Particle filter too full - replace the particle filter**: regeneration has failed. The weight of soot in the particle filter is so great that it is creating a counter pressure. Deal with any faults that appear or replace the particle filter. After replacing the particle filter, run command **SC036 Reinitialise programming** and select **After particle filter replacement**.
- **Particle filter regeneration failed - run test Temperature upstream of turbine too low**: regeneration has failed because the temperature upstream of the turbine is too low. Run **Test 8 Temperature upstream of turbine too low**.
- In all cases, carry out the following operations:
- switch off the ignition and wait for the **diagnostic tool** message (maximum time **8 minutes**): **Communication lost with computer: EDC16C36, check the tool connection and computer supply**.
- switch on the ignition and establish dialogue with the injection computer,
- run command **SC036 Reinitialise programming**,
- depending on the operation carried out, select **After particle filter regeneration with the diagnostic tool**, or **After particle filter replacement.**
- switch off the ignition and wait for the **diagnostic tool** message (maximum time **8 minutes**): **Communication lost with computer: EDC16C36, check the tool connection and computer supply**.
- clear the **Present or Stored** faults from the computer memory (operation to be carried out within **3 minutes** of the ignition being switched on).

If **DF308 Particle filter clogged** or **DF312 Speed request** is still present, contact Techline.

Note:
Always change the **engine oil** and the **oil filter** in the following cases:

- following an After-Sales regeneration **only** if requested by a message on the **CLIP diagnostic tool**,
- after **replacement** of the particle filter following **DF311 Number of failed regenerations exceeded**,
- after a second regeneration (when two successive regenerations).

AFTER REPAIR	Repeat the conformity check from the start.

GETtheMANUALS.org

SC036	REINITIALISE PROGRAMMING

NOTES	This command is used to reset the computer parameters according to the type of operation or component repaired or replaced from the following list: – the injectors – the EGR valve, – the damper valve, – after particle filter replacement, – after particle filter regeneration with the **diagnostic tool**, – after injection computer replacement with no backup option, **Ignition on and engine stopped.**

To perform this command, select scenario **SC036** in the **CLIP too**l.
Procedure to be followed:
– on the main screen, select the component to reinitialise after an operation (component removal/refitting, regeneration or replacement),
– select **YES** then **OK** to begin reinitialisation,
– select **end** on the **configuration completed** screen to return to the main screen,
end of operation.

AFTER REPAIR	Repeat the conformity check from the start.

EDC16C36_V04_SC36/EDC16C36_V08_SC036

GETtheMANUALS.org

RZ005	PROGRAMMING

NOTES	this command enables you to reinitialise the entire computer configuration according to the vehicle. **Ignition on and engine stopped.**

Command **RZ005** reconfigures the computer.
If the computer does not have any configuration data, use command **RZ005** to enter the vehicle options:
– air conditioning,
– thermoplungers,
– cruise control/speed limiter.

These options are detected by the computer even if command **RZ005** is not used.

the computer is configured as soon as the one of the vehicle's optional system components is operated.

AFTER REPAIR	Repeat the conformity check from the start.

EDC16C36_V04_RZ005/EDC16C36_V08_RZ005

GETtheMANUALS.org

RZ034	COMPUTER MEMORY

NOTES	**IMPORTANT** Only use this command if **DF107 Computer Memory** is **Present.** **Ignition on and engine stopped.**

Command **RZ034** is used to reconfigure the computer.
With the ignition on:
– Use command **RZ034**.
– Switch off the ignition and wait for the message Communication lost with computer.
– Switch on the ignition again.
– Configure the injector codes using command **SC002 Enter injector codes**.
– Run the programming commands (see **Configuration and programming**).
– Switch off the ignition and wait for the message **Communication lost with computer**.

Perform a road test to reinitialise the vehicle parameters.

AFTER REPAIR	Repeat the conformity check from the start.

EDC16C36_V04_RZ034/EDC16C36_V08_RZ034

GETtheMANUALS.org

AC004	TURBOCHARGING SOLENOID VALVE

NOTES	Perform this fault finding procedure: – following interpretation of an unresolved fault or – after dealing with the interpretation of **PR041 Turbocharging pressure** or – after a customer complaint (loss of power, smoke etc.). **Ignition on and engine stopped.** Use the **Vel Satis ph2, Espace IV ph2, Laguna II ph2** Wiring Diagram Technical Note.

1. The following procedure is for checking that the turbocharger and its control circuit are working properly.
Check the sealing of the high pressure air circuit: run **Test 2 Low pressure circuit check.**
Pipe not joined or pierced, pressure sensor disconnected or poorly fitted (seal present), exchanger pierced.
To test the exchanger, stabilise the engine speed between **3500 and 4000 rpm** with the vehicle stopped and check there are no leaks.

Measure **the resistance** of the turbocharging pressure solenoid valve between the following connections**:**
– Connection code **3MG**,
– Connection code **3FB**,
of component **1475**.
Replace the solenoid valve if its resistance is not **15.4 Ω ± 0.7 Ω at + 20°C.**

Check the **continuity, insulation, and the absence of interference resistance** on the following connections:
– Connection code **3MG** between components **1475 and 120**.
– Connection code **3FB** between components **1475 and 983**
If the connection or connections are faulty and there is a repair procedure (see **Technical Note 6015A, Electrical wiring repair, Wiring: Precautions for repair**), repair the wiring, otherwise replace it.

Run command **AC004 Turbocharging solenoid valve**. If a faint whistling noise is heard along with a clicking from the solenoid valve, go to **stage 2**, otherwise check the operation of the computer output stage:
Vehicle under + after ignition feed, clear the faults displayed by the diagnostic tool.

With the voltmeter in the direct current position:
With the turbocharging solenoid valve connected, connect the voltmeter earth lead to **connection 3MG of component 1475** and the positive lead to connection **3FB**.
Run command **AC004 Turbocharging solenoid valve**, the voltmeter should display four successive readings of **2.4 V ± 0.2 V**.
If the measurement is not correct, contact the Techline.

AFTER REPAIR	Repeat the conformity check from the start.

GETtheMANUALS.org

AC004 CONTINUED	

2. Turbocharger control circuit check:

– With the engine stopped, make sure that the control rod is in the resting position.
– Start the engine and make sure that the control rod actuates to the upper stop.
(when the engine is switched off, the control rod should return to the rest position)
If the control rod does not move correctly, carry out the following checks:

1) Control vacuum check:
– Disconnect the solenoid valve inlet **hose** and connect it to a pressure gauge.
– Start the engine and run it at a stable idle speed.
– If the vacuum pressure does not reach **400 mbar ± 150**: check the vacuum circuit from the vacuum pump.
– Stop the engine, reconnect the intake hose and go to **step no. 2**.

2) Solenoid valve control check:
– Disconnect the solenoid valve outlet **hose**.
– Start the engine and run it at a stable idle speed.
– Place your hand on the solenoid valve and block the outlet **union** with your thumb.
– If there is no perceptible vibration of the solenoid valve, contact the Techline.

3) Solenoid valve operation check:
– Connect the pressure gauge to the solenoid valve outlet **union**.
– Start the engine and run it at a stable idle speed.
– If the vacuum does not reach **400 mbar ± 150**, replace the solenoid valve.

↓

AFTER REPAIR	Repeat the conformity check from the start.

GETtheMANUALS.org

AC011	RAIL PRESSURE REGULATOR

NOTES	Perform this fault finding procedure: – following interpretation of an unresolved fault – following an inconsistency recorded in the parameters, – following a customer complaint (starting problems, engine speed instability, injection noise). **Ignition on and engine stopped.** Use the **Vel Satis ph2, Espace IV ph2, Laguna II ph2** wiring diagram Technical Note.

Step 1
Check **the continuity and absence of interference resistance** on the following connections:
– Connection code **3HI** between components **1105 and 120**.
– Connection code **3FB** between components **1105 and 983**

Run command **AC011 Rail pressure regulator**. If a slight whistling and clicking can be heard from the pressure regulator, go to **stage 2**, otherwise check the operation of the computer output stage:

Vehicle under + after ignition feed, clear the faults displayed by the diagnostic tool.

With the voltmeter in the direct current position:
With the pressure regulator connected, connect the voltmeter earth lead to **connection 3HI of component 1105** and the positive lead to **connection 3FB**.
Run command **AC011 Rail pressure regulator**, the voltmeter should display four successive voltage readings of **2.2 V ± 0.2 V**.

If the measurement is not correct, contact the Techline.

STEP 2

AFTER REPAIR	Repeat the conformity check from the start.

EDC16C36_V04_AC011/EDC16C36_V08_AC011

GETtheMANUALS.org

AC011 CONTINUED	

Step 2

In the event of rail overpressure:
Check that there are no air bubbles in the diesel fuel low pressure circuit.
Check that the rail pressure sensor is operating correctly.
Consult the interpretation of parameter **PR038 Rail pressure**.
If these checks reveal no irregularities, replace the regulator.

in the event of rail underpressure:
Check that the rail pressure sensor is operating correctly.
Consult the interpretation of parameter **PR038 Rail pressure**.
Check the low pressure diesel circuit priming.
Check the conformity of the diesel filter connections.
Check the condition of the filter (clogging and water saturation).
Check that there are no air bubbles between the filter and the high pressure pump.
Check the sealing of the low pressure and high pressure diesel fuel circuits: apply **ALP5 External leaks on the fuel circuit** (visual inspections, touch tests, etc.) on:
pump casing, overpressure valve (run **Test 10 Incorrect operation of the overpressure valve**), pipes, rail and injector unions, injector wells, etc.
Check the conformity of the seal fitting on the pressure regulator.
Check the operation of the injectors, run **Test 7 Poor injector operation**.

Carry out the necessary repairs.

If the engine starts:
Clear any faults.
Check the pressure regulator (**see ALP6 Rough idle**).
With the engine warm, leave it to idle for a few minutes (**3 to 5 minutes**):
– If it stalls and the fault reappears, replace the regulator.
– If it does not stall, stabilise the engine speed at **2000 rpm** (**1 minute**) then accelerate under full load until it cuts out.
If the engine stalls, contact the Techline.

If the engine does not startor there is no timing:
first, replace the regulator and if the fault is still present, contact the Techline.

AFTER REPAIR	Repeat the conformity check from the start.

GETtheMANUALS.org

AC012	DAMPER VALVE

NOTES	Carry out this interpretation: – after **DF226 Damper valve circuit** – or after a customer complaint (starting faults, poor performance). **Ignition on and engine stopped.** Use the **Vel Satis ph2, Espace IV ph2, Laguna II ph2** Wiring Diagram Technical Note.

Check **the continuity, insulation and absence of interference resistance** on the following connections:
– Connection code **3VN**,
– Connection code **3VM**,
between components **1461 and 120**.

Check for **+ 12 V** on connection **3FB** of component **1461**.
Check for **earth** on connection **NT** of component **1461**.
If the connection or connections are faulty and there is a repair procedure (see **Technical Note 6015A, Electrical wiring repair, Wiring: Precautions for repair**), repair the wiring, otherwise replace it.

With the vehicle ignition on, and the engine stopped:
Check that the **damper valve** is **open**.
If not, clean or replace the damper valve.
Actuate the valve using command **AC012** and check the damper valve travel and the rest position of the valve.

Check the operation of the computer output stage with a voltmeter:
Actuate the valve with command **AC012**:
Positive lead to connection **3FB** and negative lead to connection **3VN** of component **1461**.
The voltmeter should display **three cycles** of ON-OFF (**12.5 V** then return to **0 V**).

If the measurement is correct, replace the damper valve.
If the measurement does not show any operation, contact the Techline.

AFTER REPAIR	Repeat the conformity check from the start.

EDC16C36_V04_AC012/EDC16C36_V03_AC012

GETtheMANUALS.org

AC031	THERMOPLUNGER NO. 3 RELAY

NOTES	Check that the computer is correctly configured using command **LC056 heating elements**. **There must be no present or stored faults:** Perform this fault finding procedure if there is a fault with the passenger compartment heating - demisting. **Ignition on and engine stopped.** Use the **Vel Satis ph2**, **Laguna II ph2** Wiring Diagram Technical Note.

If the thermoplunger no. 3 relay does not operate during command **AC031**
Check the connections of the **Thermoplunger no. 3 relay** mounting.
check the engine management computer connections.
If there is a repair procedure (see **Technical Note 6015A**, **Repairing electrical wiring**, **Wiring**: **Precautions for repair**) repair the wiring, otherwise replace it.

Check for **+ 12 V after relay feed** on the thermoplunger no. 3 relay mounting.
– Connection code **3FB** of component **1069**.
Check the continuity and insulation of the following connection:
– Connection code **3JAB** between components **1069** and **120**.
If any connections are faulty and if there is a repair procedure (see **Technical Note 6015A, Electrical wiring repair**, **Wiring**: **Precautions for repair**), repair the wiring, otherwise replace it.

if the fault is still present, check as follows that this relay is controlled by the engine management computer:
Disconnect the thermoplunger no. 3 relay, and fit a 50 **to 100** Ω resistor on its mounting instead of the coil and connect a voltmeter as follows:
– positive terminal to **+ 12 V** battery,
– negative terminal to connection **3JAB** of component **1069**.
Run command **AC031**.
If the voltmeter shows the battery voltage (4 ON/OFF cycles of **10 seconds**), replace the thermoplunger no. 3 relay.
If the voltmeter does not show the battery voltage (4 ON-OFF cycles of **10 seconds**), contact the Techline.
If the thermoplunger no. 3 relay operates with command **AC031**, but there is still a passenger compartment heating/demisting fault, check the following using the wiring diagram:
The conformity of the thermoplungers maxi-fuse.
The presence of **+ 12 V battery** feed on connection **BP9** of component **1069**.
The conformity of the thermoplunger no. 3 relay.
Check the continuity and insulation of the following connection:
– Connection code **3JAC** between components **1069 or 1550 and 120**.
The conformity of the thermoplunger resistor (**608 m Ω ± 61 m Ω**)
the presence of earth at the water chamber (heating element mounting).
Also check the level of the cooling circuit and that there are no leaks.
Carry out the necessary repairs.

AFTER REPAIR	Repeat the conformity check from the start.

GETtheMANUALS.org

AC037	PREHEATING RELAY

NOTES	This command is only run if fault **DF025 Preheating unit diagnostic connection** or **DF017 Preheating unit control circuit** is present or stored and if there is no present fault. Consult the Wiring Diagram Technical Note **Espace IV ph2**, **Laguna II ph2**, **Vel Satis ph2** to locate the fuses and relays concerned. **Ignition on and engine stopped.**

Before applying the following fault finding procedure, check that the battery voltage is not below 12 V. Otherwise, recharge the battery.
Check the connections on the preheating unit, heater plugs and injection computer.
If there is a repair method (see **Technical Note 6015A, Repairing electrical wiring, Wiring: Precautions for repair**), repair the wiring, otherwise replace it.
Measure **the resistance** of the heater plugs. If this resistance is **> 2** Ω, replace the defective plug(s).

Check **the continuity and the absence of interference resistance** of the following connections:
– Connection code **37AA** between components **257 and 681**.
– Connection code **37AB** between components **257 and 682**.
– Connection code **37AC** between components **257 and 683**.
– Connection code **37Z** between components **257 and 680**.
If the connection or connections are faulty and there is a repair procedure (see **Technical Note 6015A, Electrical wiring repair, Wiring: Precautions for repair**), repair the wiring, otherwise replace it.

Check the **condition** of supply fuse **FM12 (70 A)** of the preheating unit on component **597**. Replace it if necessary.

Then check for **+12 V** on connection **BP35** of component **257**.
Check **the continuity, insulation, and the absence of interference resistance** of the following connections:
– Connection code **3FF**,
– Connection code **3FY**,
between components **257 and 120**.
If the connection or connections are faulty and there is a repair procedure (see **Technical Note 6015A, Electrical wiring repair, Wiring: Precautions for repair**), repair the wiring, otherwise replace it.

If the fault is still present, replace the pre-postheating unit.

AFTER REPAIR	Repeat the conformity check from the start.

EDC16C36_V04_AC037/EDC16C36_V08_AC037

GETtheMANUALS.org

AC038	LOW-SPEED FAN ASSEMBLY RELAY

NOTES	**There must be no present or stored faults.** Perform this fault finding after an engine cooling fault or air conditioning fault. Consult the Wiring Diagrams Technical Note **Vel Satis ph2**, **Espace IV ph2**, **Laguna II ph2** to locate the fuses and relays concerned. **Ignition on and engine stopped.**

If the **low speed fan assembly relay** does not operate when command **AC038** is run:
Check the **low-speed fan assembly** relay mounting and the connections of the engine management computer.
Check the fan assembly connections.
If there is a repair method (see **Technical Note 6015A, Repairing electrical wiring, Wiring: Precautions for repair**), repair the wiring, otherwise replace it.

If the fault is still present, check that the relay is actuated by the engine management computer as follows:
Disconnect the **low-speed fan assembly** relay, and fit a **50** to **100** Ω resistor on the relay mounting in place of the coil, and connect a voltmeter as follows:
– positive terminal to **+ 12 V** battery,
– negative terminal to connection **3JN** of component **336** or **1829**.
Run command **AC038**.
If the voltmeter shows the battery voltage (4 ON-OFF cycles of **10 seconds**), replace the relay.

If the **low speed fan assembly** relay is supplied using command **AC038**, but there is still a fan assembly activation fault, check using the wiring diagram.
The conformity of the fan assembly maxi-fuse **FM15**.

AFTER REPAIR	Repeat the conformity check from the start.

EDC16C36_V04_AC038/EDC16C36_V04_AC038

GETtheMANUALS.org

AC038 CONTINUED	

– Check for **+12 V** on connection **49B** of component **262** and on connection **BP71** of component **188**.
– Check for earth on connection **MAS** of component **262**.

If the tests are ok, replace the defective fan.
If not, carry out the following operations:
Check the **continuity**, **insulation and the absence of interference resistance** on the following connections:
– Connection code **49B** between components **262 and 335**, **336** or between components **262**, **1827 and 1829**.
– Connection code **MAS** between components **262 and MAS**.
– Connection code **49A** between components **188 and 337** or between components **188**, **1828 and 1829**.
– Connection code **BP71** or **BP72** between components **188**, **597 and 1827** or between components **188**, **597 and 335**.
– Connection code **49T**between components **336 and 337** or between components **1829 and 1831**.
– Connection code **3FB (Laguna II ph2)**.
– Connection code **3JN**
between components **336 or 1829 and 120**.
If any connections are faulty and if there is a repair procedure (see **Technical Note 6015A, Electrical wiring repair**, **Wiring: Precautions for repair**), repair the wiring, otherwise replace it.

Check the conformity of the fan assembly.
Carry out the necessary repairs.

AFTER REPAIR	Repeat the conformity check from the start.

GETtheMANUALS.org

AC039	HIGH-SPEED FAN ASSEMBLY RELAY

NOTES	**There must be no present or stored faults:** Perform this fault finding after an engine cooling fault. Consult the Wiring Diagrams Technical Note **Vel Satis ph2**, **Espace IV ph2**, **Laguna II ph2** to locate the fuses and relays concerned. **Ignition on and engine stopped.**

If, when running command **AC039**, the **high-speed fan assembly relay** is not activated:
Check the **high-speed fan assembly** relay mounting and the connections of the engine management computer.
Check the fan assembly connections.
Repair if necessary.

If the fault is still present, check that the relay is actuated by the engine management computer as follows:
Disconnect **high-speed fan assembly** relay **335** and fit a **50 to 100** Ω resistor on its mounting in place of the coil and connect a voltmeter as follows:
– positive terminal to **+ 12 V** battery,
– negative terminal to **connection 3JP** of component **335**.

Run command **AC039**.
If the voltmeter shows the battery voltage (4 ON-OFF cycles of **10 seconds**), replace the relay.

Disconnect **high-speed fan assembly** relay **337** and fit a **50 to 100** Ω resistor on its mounting in place of the coil and connect a voltmeter as follows:
– positive terminal to **+ 12 V** battery,
– negative terminal to **connection 3JP of component 337**.

Run command **AC039**.
If the voltmeter shows the battery voltage (4 ON-OFF cycles of **10 seconds**), replace the relay.

If the **high-speed fan assembly** relays are being powered via command **AC039 High-speed fan assembly relay**, but there is still a fan assembly activation problem, check the following using the wiring diagram:
The conformity of the fan assembly **FM15** maxi-fuse.

AFTER REPAIR	Repeat the conformity check from the start.

GETtheMANUALS.org

AC039 CONTINUED	

– Check for **+12 V** on connection **BP71** of component **188** and on connection **49B** of component **262**.
– Check for **earth** on connection **49A** of component **188** and on connection **MAS** of component **262**.

If the tests are ok, replace the defective fan.

If not, carry out the following operations:
Check the **continuity**, **insulation and the absence of interference resistance** on the following connections:
– Connection code **49B** between components **262 and 335**, **336 or between components 262**, **1827 and 1829**.
– Connection code **MAS** between components **262 and MAS**.
– Connection code **49A** between components **188 and 337** or between components **188, 1828 and 1829**.
– Connection code **BP71** or **BP72** between components **188, 597 and 1827** or between components **188, 597 and 335**.
– Connection code **3FB**,
– Connection code **3JP**,
between components **335 or 1831 and 120**.
– Connection code **MAS** between components **337 and MAS**.
– Connection code **3FB**,
– Connection code **3JP**,
between components **337 and 120**.
If the connection or connections are faulty and there is a repair procedure (see **Technical Note 6015A, Electrical wiring repair, Wiring: Precautions for repair**), repair the wiring, otherwise replace it.

AFTER REPAIR	Repeat the conformity check from the start.

GETtheMANUALS.org

AC063	THERMOPLUNGER NO. 1 RELAY

NOTES	Check that the computer is correctly configured using command **LC056 Thermoplungers** **There must be no present or stored faults:** Perform this fault finding procedure if there is a fault with the passenger compartment heating - demisting. **Ignition on and engine stopped.** Use the **Laguna II ph2**, **Vel Satis ph2** wiring diagram Technical Note.

If the thermoplunger no. 1 relay does not operate during command **AC063.**
Check the thermoplunger no.1 relay mounting.
check the engine management computer connections.
If there is a repair method (see **Technical Note 6015A, Repairing electrical wiring, Wiring: Precautions for repair**), repair the wiring, otherwise replace it.

Check for **+ 12 V** after relay on connection **3FB** of component **1067**.
If there is a repair method (see **Technical Note 6015A, Repairing electrical wiring, Wiring: Precautions for repair**), repair the wiring, otherwise replace it.

if the fault is still present, check as follows that this relay is controlled by the engine management computer:
Disconnect the thermoplunger no. 1 relay, and fit a **50** to **100** Ω resistor on the mounting instead of the coil and connect a voltmeter as follows:
– positive terminal to **+ 12 V** battery,
– negative terminal to connection **3JA** of component **1067**.
Run command **AC063**.
If the voltmeter shows the battery voltage (4 ON-OFF cycles of **10 seconds**), replace the thermoplunger no. 1 relay.

If the voltmeter does not show the battery voltage (4 ON-OFF cycles of **10 seconds**):
Check the continuity and insulation of the following connection:
– Connection code **3JA** between components **1067 and 120**.
If the connection or connections are faulty and there is a repair procedure (see **Technical Note 6015A, Electrical wiring repair, Wiring: Precautions for repair**), repair the wiring, otherwise replace it.
If the fault is still present, contact the Techline.

AFTER REPAIR	Repeat the conformity check from the start.

EDC16C36_V04_AC063/EDC16C36_V08_AC063

GETtheMANUALS.org

AC063 CONTINUED	

If "thermoplunger no. 1 relay" operates when command AC063 is run, but there is still a fault with the passenger compartment heating – demisting, check the following using the wiring diagram:
The conformity of the thermoplungers maxi-fuse.
The presence of **+ 12 V battery** feed on connection **BP9** of component **1067**.
The conformity of the thermoplunger no. 1 relay.
The **continuity and insulation of** the following connection:
– Connection code **3JB** between components **1067 and 898**.

The conformity of the thermoplunger* resistor
the presence of earth at the water chamber (heating element mounting).
If the connection or connections are faulty and there is a repair procedure (see **Technical Note 6015A, Electrical wiring repair, Wiring: Precautions for repair**), repair the wiring, otherwise replace it.
Also check the level of the cooling circuit and that there are no leaks.
Carry out the necessary repairs.

*supplier: ***Champion***: load resistance: **608 mΩ ± 61**

AFTER REPAIR	Repeat the conformity check from the start.

GETtheMANUALS.org

AC064	THERMOPLUNGER NO. 2 RELAY

NOTES	Check that the computer is correctly configured using command **LC056 Thermoplungers** **There must be no present or stored faults:** Perform this fault finding procedure if there is a fault with the passenger compartment heating - demisting. **Ignition on and engine stopped.**
	Special notes: The thermoplunger no. 2 relay **supplies** thermoplungers 2 and 3 in parallel. Use the **Laguna II ph2**, **Vel Satis ph2** wiring diagram Technical Note.

If the thermoplunger no. 2 relay does not operate during command **AC064**.
Check the connections of the **thermoplunger no. 2 relay** mounting.
check the engine management computer connections.
If there is a repair method (see **Technical Note 6015A, Repairing electrical wiring, Wiring: Precautions for repair**), repair the wiring, otherwise replace it.

Check for + **12 V** after relay feed on connection **3FB** of component **1068**.
If there is a repair method (see **Technical Note 6015A, Repairing electrical wiring, Wiring: Precautions for repair**), repair the wiring, otherwise replace it.
if the fault is still present, check as follows that this relay is controlled by the engine management computer:
Disconnect the thermoplunger no. 2 relay, and fit a **50** to **100** Ω resistor on the mounting instead of the coil and connect a voltmeter as follows:
– positive terminal to **+ 12 V** battery,
– negative terminal to connection **3JAA** of component **1068**.

Run command **AC064**.
If the voltmeter shows the battery voltage (4 ON-OFF cycles of **10 seconds**), replace the thermoplunger no. 2 relay.
If the voltmeter does not show the battery voltage (4 ON-OFF cycles of **10 seconds**):
Check the **continuity and insulation** of the following connection:
– Connection code **3JAA** between components **1068 and 120**.
If the connection or connections are faulty and there is a repair procedure (see **Technical Note 6015A, Electrical wiring repair, Wiring: Precautions for repair**), repair the wiring, otherwise replace it.
If the fault is still present, contact the Techline.

AFTER REPAIR	Repeat the conformity check from the start.

GETtheMANUALS.org

AC064 CONTINUED	

If the thermoplunger no. 2 relay operates with command AC064, but there is still a passenger compartment heating/demisting fault. Check using the wiring diagram:
The conformity of the thermoplungers maxi-fuse.
The presence of **+ 12 V** battery feed on connection BP91 of component **1068**.
The conformity of the thermoplunger no. 2 relay.
The **continuity and insulation of** the following connection:
– Connection code **3JAD** between components **1068 and 1072/1073**.

The conformity of the thermoplunger* resistors
the presence of earth at the water chamber (heating element mounting).
If the connection or connections are faulty and there is a repair procedure (see **Technical Note 6015A, Electrical wiring repair, Wiring: Precautions for repair**), repair the wiring, otherwise replace it.
Also check the level of the cooling circuit and that there are no leaks.
Carry out the necessary repairs.

*supplier: ***Champion***: load resistance: **608 mΩ ± 61**

AFTER REPAIR	Repeat the conformity check from the start.

GETtheMANUALS.org

AC103	EGR BY-PASS

NOTES	Carry out this fault finding procedure when the interpretation of fault **DF304 EGR bypass circuit** has not been resolved. **Ignition on and engine stopped.** Use the **Vel Satis ph2**, **Espace IV ph2**, **Laguna II ph2** Wiring Diagram Technical Note.

Measure **the resistance** of the EGR bypass solenoid valve between the following connections**:**
– Connection code **3TP,**
– Connection code **3FB,**
of component **1301.**
43 Ω to 49 Ω at + 25°C.
32 Ω to 37 Ω at - 40°C

If the resistance is not correct, replace the EGR by-pass solenoid valve.

Check **the continuity, insulation and absence of interference resistance** on the following connections:
– Connection code **3TP** between components **1301 and 120**.
– Connection code **3FB** between components **1301 and 983.**
If the connection or connections are faulty and there is a repair procedure (see **Technical Note 6015A, Electrical wiring repair, Wiring: Precautions for repair**), repair the wiring, otherwise replace it.

If you notice no valve movement when running command **AC103**, ensure that the computer output stage is functioning:

Vehicle under + after ignition feed, clear the faults displayed by the diagnostic tool.

With the voltmeter in the direct current position:
With the EGR BY-PASS solenoid valve connected, connect the voltmeter earth lead to connection **3TP** of component **1301** and the positive lead to connection **3FB**.
Run command **AC103**, the voltmeter should display four successive readings which are approximately equal to the **12 V** battery voltage.

If the voltmeter indicates no control or a continuous voltage, contact the Techline.
If activation has run correctly, check the control vacuum:
– Disconnect the solenoid valve inlet **hose** and connect it to a pressure gauge.
– Start the engine and run it at a stable idle speed.
– If the vacuum pressure does not reach **800 mbar ± 100**: check the vacuum circuit from the vacuum pump.
Repair if necessary.

AFTER REPAIR	Repeat the conformity check from the start.

EDC16C36_V04_AC103/EDC16C36_V08_AC103

GETtheMANUALS.org

NOTES	Only check the customer complaint after performing a **complete check** with the **diagnostic tool.**

No dialogue with engine management computer	**ALP1**
Starting difficult or impossible	**ALP2**
Poor performance	**ALP3**
Irregular engine operation	**ALP4**
External leaks from the fuel circuit	**ALP5**
Rough idle	**ALP6**
Particle filter warning light comes on too often	**ALP7**

GETtheMANUALS.org

ALP1	No dialogue with engine management computer

STEP 1
Check the conformity of the vehicle type and the domain selected on the tool.
Check that the **diagnostic tool** is not faulty by attempting to establish dialogue with a computer on another vehicle.
Check the supply to the diagnostic socket:
– + Before ignition.
– + After ignition.
– Earth.

Check (according to wiring diagram and equipment):
– The conformity of the after ignition fuse.
– The conformity of the injection relay mounting.

the conformity of the injection relay: **65** Ω ± **5** Ω between the following connections**:**
– Connection code **BP37**,
– Connection code **3AA**,
of component **983**.

Infinite resistance between the following connections (open contact):
– Connection code **BP37**,
– Connection code **3FB**,
of component **983**.

resistance < **0.2** Ω between the following connections (contact closed):
– Connection code **BP37**,
– Connection code **3FB**,
of component **983**.

Disconnect the engine management computer and check that there are no conducting parts on the computer studs. If this reveals any kind of impurity, rectify it and try to establish dialogue.
If the fault is still present, place the bornier **Elé. 1681** on the engine harness:
Check **for continuity and absence of interference resistance** on the following multiplex connections:
– Connection code **133B**,
– Connection code **133C**,
between components **120 and 225**.

Check for **+ 12 V** on the following connections:
– **3FB** and **AP29** of component **120**

Check for **earth** on the following connections:
– **NT** of component **120.**

AFTER REPAIR	Carry out a road test, then check with the **diagnostic tool**.

EDC16C36_V04_ALP01/EDC16C36_V08_ALP01

GETtheMANUALS.org

ALP1 CONTINUED	

If there is no + **12 V**, carry out the following operations:
Shunt the **normally open** contact of the central injection unit supply relay, i.e. connections **BP37 and 3FB** of component **983**.
Check for + **12 V** on connections **3FB and AP29** of component **120**.

Check the continuity of the following connection:
Connection code **3AA** between components **120** and **983**

Try to establish dialogue with another computer on the same vehicle.
If dialogue is established with **another computer on the same vehicle,** go to **step 2**.
If dialogue cannot be established with **any other computer on the same vehicle** (**see 88B**, **Multiplexing**, **ALP**).

STEP 2
Contact the Techline.

AFTER REPAIR	Carry out a road test, then check with the **diagnostic tool**.

GETtheMANUALS.org

ALP2	Starting difficult (or impossible)

NOTES	**Before analysing this customer complaint, check that there are no faults, and the conformity (or otherwise) of the parameters and statuses, using the diagnostic tool.** **If the customer complaint is not eliminated, perform the following checks.** Use the **Vel Satis ph2**, **Espace IV ph2**, **Laguna II ph2** Wiring Diagram Technical Note.

Is it difficult or impossible to start the engine?

impossible → **PART B**

difficult ↓

PART A:

Check the engine earths.
If the engine speed is less than **200 rpm**, consult **Technical Note 6014A**, **Checking the charging circuit**, and **Technical Note 3632A**, **Starter fault finding**, **Starter**
If an engine speed of **200 rpm** is achieved with starter motor in operation, **PR055 Engine speed**.

If the engine speed shown on CLIP is zero and the engine is running, check the **resistance** of the engine speed sensor between the following connections:
– Connection code **3BG**,
– Connection code **3BL**,
of component **149**.
Replace the sensor if its resistance is not between **175 Ω and 295 Ω at 23°C**.

Check **the continuity and insulation** of the following connections:
– Connection code **3BG**,
– Connection code **3BL**,
between components **120 and 149**.

Check the conformity of the engine earths (oxidation, tightness, etc.).
Check the mounting and condition (overheating) of the sensor.
Replace if necessary.

AFTER REPAIR	Carry out a road test, then check with the **diagnostic tool**.

EDC16C36_V04_ALP02/EDC16C36_V08_ALP02

GETtheMANUALS.org

ALP2 CONTINUED 1	

Check the synchronisation of the camshaft sensors and the engine speed sensors by displaying **ET238 Synchronisation**. If synchronisation is not active, refer to the checks described in **DF195 Engine speed/ camshaft sensor consistency**.

Check the fuel circuit sealing: run **Test 2 Low pressure circuit check**.
If **Test 2 Low pressure circuit check** is correct,
apply **part A** of **test 12 High pressure fuel circuit test**.

Check that the heater plugs are actuated using the **AC037 Preheating relay** command.
Check the sealing and condition of the inlet circuit, run **Test 3 Turbocharged air inlet circuit check** and follow the procedure.

Check that the exhaust is not blocked, run **Test 1 Exhaust system check** and follow the procedure.

Check the consistency of the signal from the engine coolant temperature sensor.

Check the operation of the rail pressure regulator (DRV) using command **AC011 Rail pressure regulator**.

Check the timing setting.

Check engine compression.

Apply **part B** of **Test 12 High pressure fuel circuit test**.
End of part A

AFTER REPAIR	Carry out a road test, then check with the **diagnostic tool**.

GETtheMANUALS.org

ALP2 CONTINUED 2	

PART B

Is there diesel fuel in the fuel tank?

NO → Fill the tank with diesel fuel. Bleed the low and high pressure diesel circuit.

YES

Does the starter motor work properly? (Check that an engine speed **> ~ 200 rpm** is obtained under starter, **PR055 Engine speed**)

NO → Refer to **Technical Note 6014A, Checking the charging circuit, 16A, Starter fault finding, Starter**

YES

Using **the diagnostic tool**, check the conformity of the immobiliser: **ET003 Immobiliser** must be **INACTIVE**.

ET003 not correct or immobiliser warning light permanently illuminated → Consult the fault finding procedure for the immobiliser.

ET003 correct (immobiliser code warning light off) → Continue the fault finding procedure with **Part A** of this fault finding chart.

AFTER REPAIR	Carry out a road test, then check with the **diagnostic tool**.

GETtheMANUALS.org

ALP3	Poor performance

NOTES	**Before analysing this customer complaint, check that there are no faults, and the conformity (or otherwise) of the parameters and statuses, using the diagnostic tool.** **If the customer complaint is not eliminated, perform the following checks.**

IMPORTANT
In the case of engine overheating to above **118°C**, the computer deliberately limits the fuel flow (overheating warning light lights up from **115°C**).
– Please observe the cleanliness guidelines and safety advice.

Is the engine running on all cylinders? — YES → (A)

NO ↓

Check the operation of the injectors, run **Test 7 Poor injector operation**.
Check the conformity of the fuel used, apply **Test 9 Diesel fuel conformity check**.

– Check that the injectors are correctly fitted (presence and **conformity of the sealing washer**).
– Checking procedure:
– Take a straight edge approximately **40 cm** long, and place it on the **4** injectors. The straightedge should rest on the **4** injectors.
– If **1** injector protrudes, remove the injector and check that the washer is correct.
– If one injector does not touch the straightedge (clearance of more than **1 mm**), remove the injector and check for the presence of the washer.
– Clean the injector well and the injector, refit the injector with its correct sealing washer.

– Check the sealing and condition of the inlet circuit, run **Test 3 Turbocharged air inlet circuit check**.
– Check the condition of the air flowmeter, run **Test 4 Air flowmeter**.
– Check the turbocharger: run **Test 5 Variable geometry turbocharger control** then **Test 6 Turbocharger rotating part**.

AFTER REPAIR	Carry out a road test, then check with the **diagnostic tool**.

EDC16C36_V04_ALP03/EDC16C36_V08_ALP03

GETtheMANUALS.org

ALP3 CONTINUED	

A

Check the correct location and connection of the differential pressure sensor (see **MR 402 (Vel Satis ph2), MR 361 (Espace IV ph2) or MR 395 (Laguna II ph2) Mechanical, 19B Exhaust, Particle filter pressure sensor: Removal - Refitting.**

Carry out the check conformity for the accelerator pedal sensor, for the brake pedal sensor, for the atmospheric pressure sensor, for the exhaust gas recirculation valve and for the damper valve.
– Check the consistency of the signal for the air flowmeter, the engine coolant temperature sensor, the fuel temperature sensor and the engine speed.
Check the connections, the continuity and the absence of interference resistance of the air flowmeter (apply **DF056 Air flow sensor circuit**), the engine coolant temperature sensor (apply **DF001 Coolant temperature circuit**), the fuel temperature sensor (apply **DF098 Fuel temperature sensor circuit**) and the engine speed (apply **DF195 Engine speed/camshaft sensor consistency**).

Check:
– That the diesel filter is not clogged.
– That there are no leaks on the high and low pressure diesel circuits, run **test 2 Low pressure circuit check**.
– The connection of the oil vapour rebreathing circuit.
– The rail pressure regulator (MPROP) (jammed - stuck); apply the interpretation of command **AC011 Rail pressure regulator**.

– Check the engine timing (and the position of the high pressure pump sprocket).
(See the procedure in the **Workshop Repair Manual** if necessary)
– Check the engine compressions**.**

If the fault is still present, contact the techline.

AFTER REPAIR	Carry out a road test, then check with the **diagnostic tool**.

GETtheMANUALS.org

ALP4	Irregular engine operation

NOTES	**Before analysing this customer complaint, check that there are no faults, and the conformity (or otherwise) of the parameters and statuses, using the diagnostic tool.** **If the customer complaint is not eliminated, perform the following checks.** Use the **Vel Satis ph2**, **Espace IV ph2**, **Laguna II ph2** Wiring Diagram Technical Note.

If the engine races during gear changes, if there is a floor carpet, check that this is not blocking the accelerator pedal, the brake pedal and the clutch pedal, then check the conformity of the clutch switch and the conformity of the accelerator pedal sensor when the pedal is released.

Measure **the resistance** of the engine speed sensor between the following connections:
– Connection code **3BG**,
– Connection code **3BL**,
of component **149**.
Replace the sensor if the resistance is not: **175 Ω to 295 Ω at +23°C**

Check the **continuity** of the following connections:
– Connection code **3BG**,
– Connection code **3BL**,
between components **120 and 149**.

Check the conformity of the engine earths (oxidation, tightness, etc.).
Check the mounting and condition (overheating) of the sensor.
Replace if necessary.

Check the low pressure circuit: run **Test 2 Low pressure circuit check**.
– Apply the air flow checking procedure, (see "conformity check").

– Check the turbocharger: run **Test 5 Variable geometry turbocharger control** then **Test 6 Turbocharger rotating part**

If the customer complaint is still present, contact Techline.

AFTER REPAIR	Carry out a road test, then check with the **diagnostic tool**.

EDC16C36_V04_ALP04/EDC16C36_V08_ALP04

GETtheMANUALS.org

ALP5	External leaks from the fuel circuit

NOTES	**Before analysing this customer complaint, check that there are no faults, and the conformity (or otherwise) of the parameters and statuses, using the diagnostic tool.** **If the customer complaint is not eliminated, perform the following checks.** **IMPORTANT** **Please observe the cleanliness guidelines and safety advice.**

Procedure for checking for an external leak on the fuel circuit:
Clean away traces of grease with clean thinner and wipe the part or parts concerned with cleaning cloths.
Start the engine and increase the engine temperature until the diesel fuel reaches **40/50°C**.
Stop the engine and check for traces of grease on the part or parts concerned.
If this is the case, replace the part or parts concerned.
Bleed the fuel circuit and continue the checks.

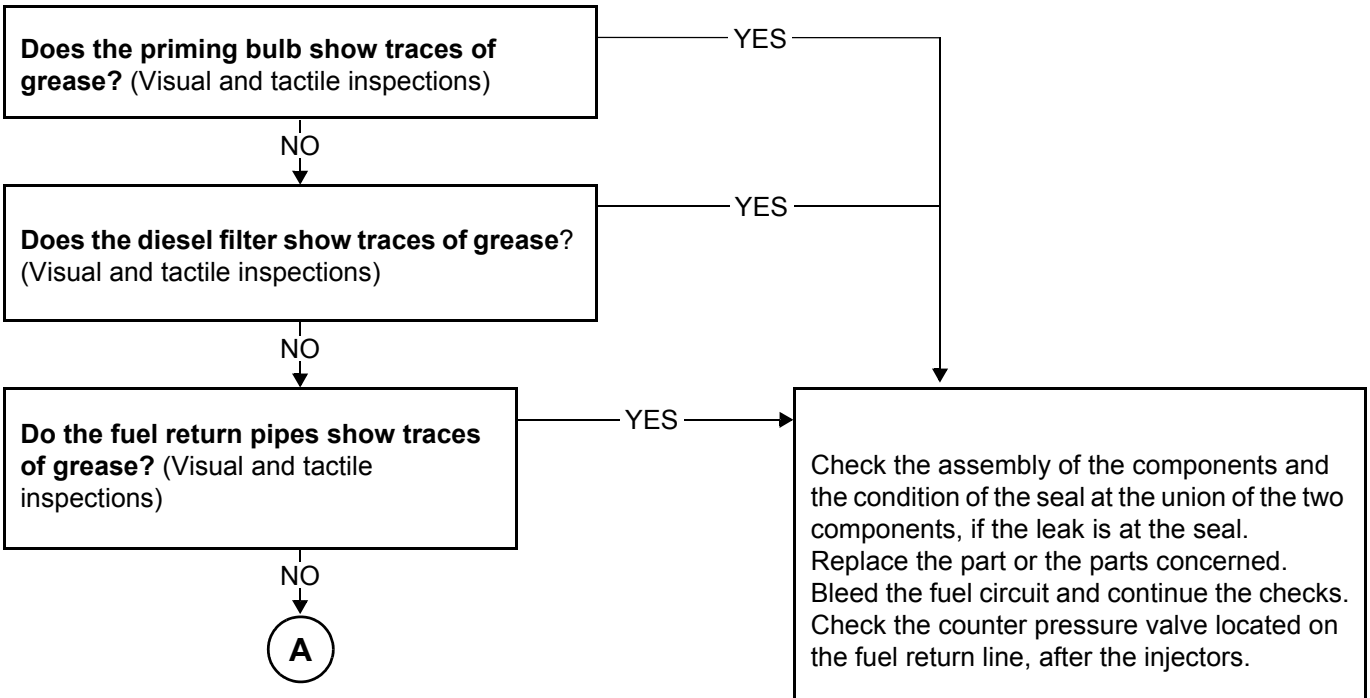

AFTER REPAIR	Carry out a road test, then check with the **diagnostic tool**.

EDC16C36_V04_ALP05/EDC16C36_V08_ALP05

GETtheMANUALS.org

ALP5 CONTINUED

A

Does the high pressure pump show traces of grease? (Visual and tactile inspections)

YES

NO

Do the high pressure pipes and the injector rail show traces of grease?
(Visual and tactile inspections)

YES

NO

Do the injectors show traces of grease?
(Visual and tactile inspections)

YES

NO

End of fault finding.

Location of the leak: Where does the leak appear?

On the component

– If the leak is on the component, replace this and the high pressure pipe(s) at the same time as the component.

on theunion/ join

– If the leak is on the join of a high pressure pipe and the component, remove the high pressure pipe and perform a visual inspection of the unions: if you find damaged unions, change the faulty component and the high pressure pipe(s) removed at the same time as the component.

– For safety reasons, high pressure pipes must not be refitted.

Reminder:
Only replace the rail, pump or injector if there is damage to the union and this damage is visible during checks. Bleed the fuel circuit and continue the checks.

AFTER REPAIR	Carry out a road test, then check with the **diagnostic tool**.

GETtheMANUALS.org

ALP6	Rough idle

NOTES	**Before analysing this customer complaint, check that there are no faults, and the conformity (or otherwise) of the parameters and statuses, using the diagnostic tool.** **If the customer complaint is not eliminated, perform the following checks.**

– Check the sealing and condition of the inlet circuit by running **Test 3 Turbocharged air inlet circuit check**.
– Check the low pressure circuit by running **Test 2 Low pressure circuit check**.

↓

check the engine parameters:
– Check the update of the engine management computer calibration (last calibration).
– Check the conformity of the**IMA** codes (using the **Identification** screen on the **Clip diagnostic tool**).
– Check the charging circuit (see **Technical Note 6014A, Checking the charging circuit**)

To check the conformity of the engine speed signal, check:
* the wiring,
* The position of the flywheel and the condition of the flywheel teeth.
* the position and tightness of the engine speed sensor.
– Check the fuel flow correction from station to station, run **Test 7 Poor injector operation**.

↓

Check the connections and wiring of the injectors.
Check the connections and wiring of the engine management computer to the injectors.
Repair if necessary.

↓

(A)

AFTER REPAIR	Carry out a road test, then check with the **diagnostic tool**.

EDC16C36_V04_ALP06/EDC16C36_V08_ALP06

GETtheMANUALS.org

ALP6 CONTINUED	

A

Check the high pressure circuit (external leaks) (see the end of **ALP5 Fuel circuit external leaks**)

Check the timing setting (and the position of the high pressure pump pinion)

Check the lower engine:
– Check the compressions using the CLIP Technique **diagnostic tool**, **Compression test** or the special tool.
– Only check the engine stand if there is noise or excessive vibration when idling.
If the checks are correct, contact the Techline.

AFTER REPAIR	Carry out a road test, then check with the **diagnostic tool**.

GETtheMANUALS.org

ALP7	Particle filter warning light illuminates too often

NOTES	**Before dealing with this customer complaint, check that there are no faults except DF312 "Speed request", and the conformity (or otherwise) of the "parameters" and "statuses" using the diagnostic tool. Deal with the other faults first.** **If the customer complaint is not eliminated, perform the following checks.**

Have the last **10** regeneration attempts failed?

Is the distance of **PR412 Distance of last successful regeneration** less than all the parameters of group 2? **(PR794 to PR803 Stored regeneration failure no.1 to no.10**)

NO → Is at least one status in group 1 = **STATUS4?**

NO → Symptom not confirmed

YES → A

YES

Are all the regeneration failures linked to engine cut-off?
See parameter **ET706 Stored engine status no.1 to ET715 Stored engine status no.10**) (E.g. **ET706 STOPPED**)

YES → Output 1

NO

Check that there are no leaks or blockages in the exhaust pipe,
Repair if necessary.
Perform After-Sales regeneration if it was not performed previously (see **Interpretation of commands**, **SC017 Particle filter regeneration**)

→ Output 2

AFTER REPAIR	Carry out a road test, then check with the **diagnostic tool**.

EDC16C36_V04_ALP07/EDC16C36_V08_ALP07

GETtheMANUALS.org

ALP7 CONTINUED 1	

A

Recognition of parameters corresponding to the start of successful regenerations.
Make adjustments to align the parameter groups.

Group 1 Stored regeneration start no. 1 to 10
and
Group 2 Stored regeneration failure no. 1 to 10

For each group 1 parameter, if there is no parameter in **group 2 in the next 30 miles (50 km),** note that this means a successful regeneration (R). If there is one, this means a failure (E).

Note group 1 here:	Note group 2 here:	Type of regeneration:				
PR816: ___ ET742 ___	PR794: __	**PR816:**	R		E	
PR817: ___ ET743 ___	PR795: __	**PR817:**	R		E	
PR818: ___ ET744 ___	PR796: __	**PR818:**	R		E	
PR819: ___ ET745 ___	PR797: __	**PR819:**	R		E	
PR820: ___ ET746 ___	PR798: __	**PR820:**	R		E	
PR821: ___ ET747 ___	PR799: __	**PR821:**	R		E	
PR822: ___ ET748 ___	PR800: __	**PR822:**	R		E	
PR823: ___ ET749 ___	PR801: __	**PR823:**	R		E	
PR824: ___ ET750 ___	PR802: __	**PR824:**	R		E	
PR825: ___ ET751 ___	PR803: __	**PR825:**	R		E	

B

AFTER REPAIR	Carry out a road test, then check with the **diagnostic tool**.

GETtheMANUALS.org

ALP7 CONTINUED 2	

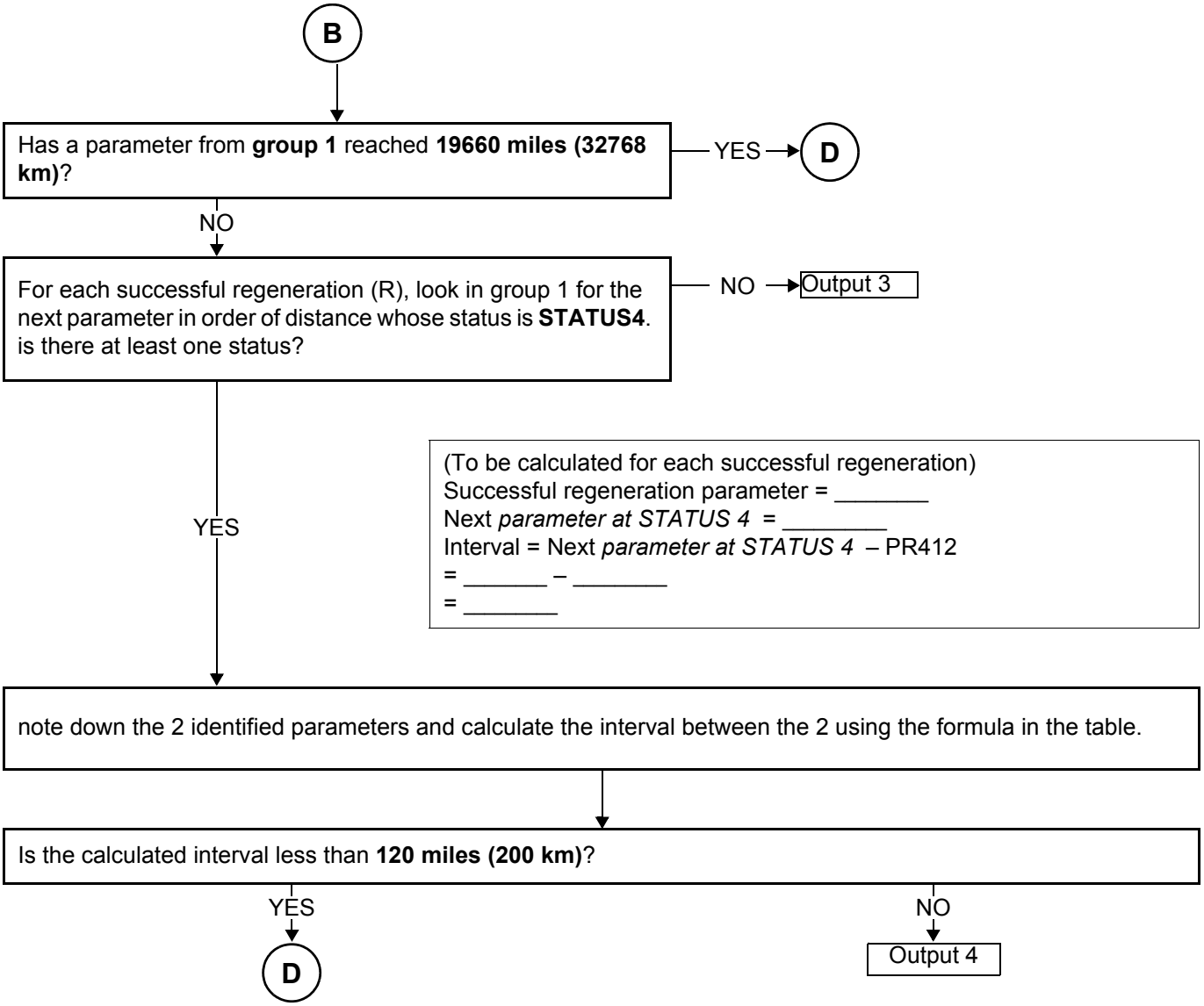

AFTER REPAIR	Carry out a road test, then check with the **diagnostic tool**.

GETtheMANUALS.org

ALP7 CONTINUED 3	

D

Check the consistency between the **IMA** codes read on the **CLIP diagnostic tool** and the codes engraved on the injector bodies.
Check that the particle filter differential pressure sensor is correctly positioned and connected **(see MR 405, 395 or 402 Mechanical, 19B, Exhaust, Particle filter pressure sensor: Removal-Refitting)**.
Check the exhaust pipe (see **Test 1 Exhaust pipe check**).
Check the air inlet circuit (see **Test 3 Turbocharged air inlet circuit check**).
Check the air flowmeter (see **Test 4 Air flowmeter**).
Check the turbocharger (see **Test 5 Variable geometry turbocharger control and Test 6 Turbocharger rotating part**).
Check the injectors (see **Test 7 Poor injector operation**).
Check the cylinder compressions.

If the fault has not been located and the customer complaint is still present, contact the Techline.

AFTER REPAIR	Carry out a road test, then check with the **diagnostic tool**.

GETtheMANUALS.org

ALP7 CONTINUED 4	

Analysis of output from **ALP 7 Particle filter warning light comes on too frequently**

ALP output no.	ALP 7 output conditions	Cause - type of driving	Regeneration frequency	What to tell the customer?
Output 1	The last 10 regeneration attempts have failed due to the engine cutting out.	Regeneration failures caused by **engine cut-off**.	No regeneration frequency analysis.	Explain to the customer the need to wait until the end of regeneration (warning light goes out) before switching off the engine.
Output 2	The last 10 regeneration attempts have failed, but not because of the engine cutting out.	**Unsuitable driving conditions**	No regeneration frequency analysis.	Explain to the customer the driving criteria for when the warning light comes on.
Output 3	After successful regenerations stored in the memory, the warning light did not come on. No interval can be calculated.	Since the last successful stored regenerations, the driving conditions have not allowed the warning light to come on.	Should be normal	Vehicle correct
Output 4	The interval between a successful regeneration and the particle filter warning light coming on is correct (above the lowest possible values). The system does not have any irregular components.	Unfavourable driving (urban zone, underspeed, etc.)	Normal	Vehicle correct

AFTER REPAIR	Carry out a road test, then check with the **diagnostic tool**.

GETtheMANUALS.org

Exhaust system check	TEST1
Low pressure circuit check	TEST2
Checking the turbocharged air inlet circuit	TEST3
Air flowmeter	TEST4
Variable geometry turbocharger control	TEST 5: Apply TEST 4 of Technical Note 3419*
Turbocharger rotating part	TEST 6: Apply TEST 7 of Technical Note 3419*
Incorrect injector operation	TEST7
Temperature upstream of turbine too low	TEST8
Diesel fuel conformity check	TEST9
Incorrect operation of the overpressure valve	TEST10

*Technical Note 3419: Fault finding on the turbocharger for petrol and diesel engines

GETtheMANUALS.org

TEST1	Exhaust system check

Engine stopped:
Check that the silencer outlet is not blocked. Repair or replace the silencer, if necessary.

↓

Check the seal of the exhaust manifold on the contact surface between the turbocharger and the exhaust manifold.
Is the seal in order?

NO → Repair or replace the faulty part.

YES ↓

Loosen the catalytic converter on the turbocharger side.
Place a wooden block between the two parts.
Start the vehicle and check if the engine runs better.
Is the engine running normally?

NO → The exhaust pipe is not the cause of the fault; repeat the engine fault finding in the Customer complaints - Fault finding chart section.

YES ↓

Retighten the catalytic converter.
Loosen or uncouple the particle filter on the catalytic converter side. Place a wooden block between the two parts if necessary.
Start the vehicle and check if the engine runs better.
Is the engine running normally?

NO → Replace the catalytic converter.

YES ↓

Retighten the particle filter.
Loosen or separate the silencer on the particle filter side (**see MR 395, 402, 405 Mechanical,19B Exhaust, Parts and consumables for repair**).
Start the vehicle and check if the engine runs better.
Is the engine running normally?

NO → Replace the particle filter (**see MR 395, 402, 405 Mechanical,19B Exhaust, Particle filter removal - refitting**).
After any operation on the particle filter, reinitialise the parameters.
Run command **SC036: Reinitialise programming** and select **After particle filter replacement**.

YES ↓

Replace the silencer.

EDC16C36_V04_TEST01/EDC16C36_V08_TEST01

GETtheMANUALS.org

TEST2	Low pressure circuit check

CP3 HIGH PRESSURE PUMP, M9R Engine

Check the fuel filter:
– Conformity of the fuel filter (correct part number and RENAULT filter),
– positioning and clogging condition of the filter cartridge,
– Positioning and condition of the seals.
– if there is metal swarf in the filter:
Replace the fuel filter, bleed the circuit and **continue the fault finding procedure**.

Supplying the injection system with fuel from an additional tank.

This operation aims to detect possible faults in the low pressure supply system of a vehicle by replacing it entirely with an additional tank.
Mode:
– Disconnect the diesel fuel supply pipe at the fuel filter inlet and seal it with a plug.
– Connect a pipe to the fuel filter inlet and insert the other end in a **clean** container with a capacity of approximately **5 litres**.
– Disconnect the diesel return pipe at the diesel temperature sensor (pump return and injector return join), and block it using a plug.
– Connect a transparent pipe to the union of the diesel temperature sensor, and insert the other end in the container.
– Fill the container with **clean** diesel fuel.
– Start the engine and let the system drain itself of its air (there must not be any air bubbles in the return pipe).

Is the customer complaint still present? — YES → If the low pressure circuit is in order, reconnect the various pipes of the low pressure circuit and repeat the fault finding chart fault finding or of the fault that referred you to this test.

NO

Are the low pressure circuit connections in order and in good condition? — YES → Carry out the necessary repairs.

NO

A

EDC16C36_V04_TEST02/EDC16C36_V08_TEST02

GETtheMANUALS.org

TEST2 CONTINUED	

A

Check the condition and operation of the priming bulb. Perform repairs if necessary and continue the test.

Check the condition of all the low pressure diesel pipes from the tank to the injection pump (in particular no pinching of pipes).

If the fault is still present with a low fuel level, check the consistency of the actual fuel level and that indicated on the instrument panel.
– The transfer pump is supplied via a Venturi pipe mounted underneath it.
Check that the opening of the venturi (**6 to 8 mm** in diameter) is not blocked by dirt contained in the fuel tank.

Check the priming of the low pressure diesel circuit.

– Check the conformity of the fuel used, apply Test 9 Diesel fuel conformity check.

Low pressure circuit correct.

GETtheMANUALS.org

TEST3	Checking the turbocharged air inlet circuit

Engine stopped: Check the **sealing** (air leaks in or out) of the low and high pressure air circuit (before/after the turbocharger).

Check the parts that are abnormally greasy of the circuit and reveal a lack of tightness.
Check:
– The condition and fitting of the ducts (foreign bodies, clogged, displaced, kinked, broken, pierced, cut, tightness of the mounting bolts, etc.).
– the presence, condition and fitting of the seals,
– the presence and tightening of the clamps,
– the fitting of the turbocharger pressure sensor.
– the pipe and take-off point between the air duct and the turbocharging sensor
Carry out the necessary repairs.

Checking the air filter.

Check that the air filter box inlet and outlet are free from blockages, the condition and fitting of the air filter box (loose, broken, pierced etc.), the cleanliness, conformity and non-deformation of the filter element, and the air flowmeter: run **test 4 Air flowmeter**. Carry out the necessary repairs.

Check:
– - the condition of the damper valve,
– - the tightness of the mounting bolts,
– - cracks in the damper valve.
Carry out the necessary repairs.
Replace if necessary.

Check that there is no leak at the exhaust manifold, in particular at the exhaust manifold/turbocharger connection.
Check the exhaust system, run **test 1 Exhaust system check** in **ALP 2**.
Carry out the necessary repairs.

Carry out a visual inspection of the EGR circuit sealing.
Note: the operating play in the EGR heat exchanger valve shaft produces small black marks due to a slight leak of no importance. Do not replace this part.
Replace if necessary.

Check the condition of the intercooler:
– clogging,
– leaks (vehicle stationary, stabilise the engine speed between **3500 rpm and 4000 rpm** and check that there are no leaks).
Replace if necessary.

Check that the take-off point for the turbocharging pressure sensor is not blocked.
Replace if necessary.
END OF TEST.

EDC16C36_V04_TEST03/EDC16C36_V08_TEST03

GETtheMANUALS.org

TEST4	Air flowmeter

Damage to electrical components
Visual inspection: remove the flow sensor - the components should not be broken.
Replace the air flowmeter if necessary.

↓

Oxidation of the electrical components
Visual inspection: remove the air flowmeter, there should not be any greenish deposits on the electrical components.
Replace the air flowmeter if necessary.

↓

Clogging of the air flowmeter
Test:
– Check the values for conformity:
– During the first 5 seconds after starting,
– PR064 Coolant temperature: 80°C,
– **PR055: Engine speed**: idle speed**,**
– **PR058 Air temperature** between **30 and 70°C**
– PR132 Air flow: 24 ± 4 kg/h
– PR051 EGR valve position feedback 26 ± 4 %,
– **PR023 Air flow difference** between **- 50 and + 50 mg/stroke**.
– Apply the procedure for **DF056 Air flow sensor circuit** for the checks on the air flowmeter.

Replace the air flowmeter if necessary.

END OF TEST.

* OCR: Opening Cyclic Ratio

GETtheMANUALS.org

TEST4 CONTINUED	

Contamination of the grille

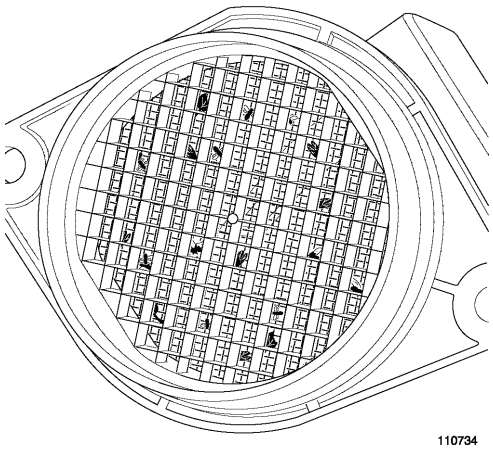

Damage to the electrical sensors

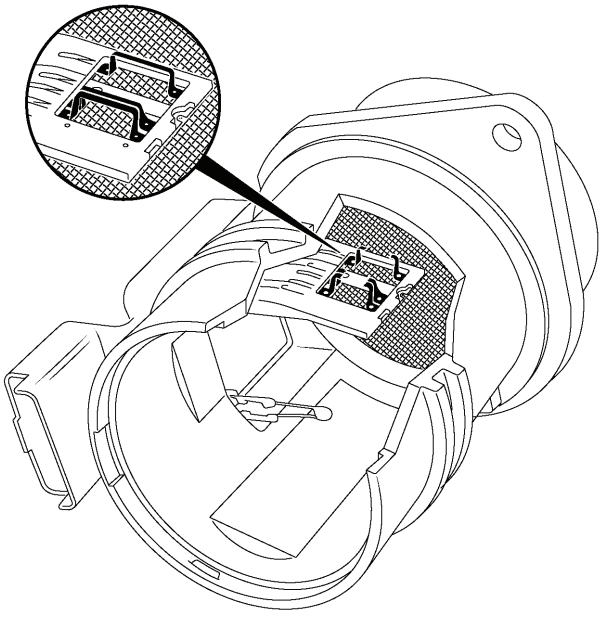

END OF TEST4.

GETtheMANUALS.org

TEST 7	Incorrect injector operation

Part A: Fuel regulation balance check for each injector (individual correction):

– In the **CLIP diagnostic tool**, choose the **Fuel circuit** subfunction.
– With the engine idling and the fuel temperature **> 50°C**, view the flow correction values of each injector (individual correction), i.e.:
– PR364 Cylinder no. 1 fuel flow correction.
– PR405 Cylinder no. 2 fuel flow correction.
– PR406 Cylinder no. 3 fuel flow correction.
– PR365 Cylinder no. 4 fuel flow correction.
The normal flow correction **value** per injector is between **- 5 mg/stroke and + 5 mg/stroke without reaching these values**.

– If this has not already been carried out, check the injector connections and wiring.
– Check the connections and wiring of the engine management computer to the injectors.
– Repair if necessary.

– Check the **IMA** injector codes, by comparing the **IMA** engraved codes on the injectors (the **IMA** codes are read from left to right) and the **IMA** codes read with the **diagnostic tool**.
– If the **IMA** codes are correct, continue the fault finding procedure,
– If not, enter the incorrect **IMA** codes using command **SC002 Enter injector codes** (see **Interpretation of commands**).
To confirm the repair, consult **part B** of this test.

CASE No. 1: If at least one of the values is greater than or equal to + 5 mg/st
– Check the valve clearance.
– Check the status of the engine and the compressions (using **the CLIP diagnostic tool** or using a compression gauge).
– If the compression test reveals a cylinder fault, carry out the necessary repairs.
– If the compression is correct, check the fitting conformity of the injector (see **MR 402 (Vel Satis ph2**), **MR 361 (Espace IV ph2) or MR 395 (Laguna II ph2) Mechanical 13B Diesel injection**, **Diesel fuel injectors: Removal - Refitting).**

Ensure that each injector has only one heat protection washer.
Check the fuel regulation again for each injector (individual correction).
– Otherwise, replace the injector and check the presence of the sealing washer. Modify the **IMA** code using command **SC002 Enter injector codes** (see **Interpretation of commands**).
– Apply **Part B** of this test to confirm the fault finding.

GETtheMANUALS.org

TEST 7 CONTINUED 1	

CASE No. 2: If at least one of the values is less than or equal to - 5 mg/st
– Check the valve clearance.
– Check the level and condition of the engine oil.
– Remove the injector with the largest adjustment.
– If there is contamination via the diesel, check the condition of the cylinder concerned (cylinder, piston, valves). Use an endoscope if possible.
– Only replace the removed injector, and modify the **IMA** code using command **SC002 Enter injector codes** (see **Interpretation of commands**).
– Apply **Part B** of this test to confirm the fault finding procedure.

CASE No. 3: If at least one of these values does not stabilise (20 seconds after starting)
– Check the low pressure circuit with **Test 3 Low pressure circuit check**.
– Check the conformity of the fuel, apply **Test 9 Diesel fuel conformity check**.
– Apply **Part B** of this test to confirm the fault finding procedure.

CASE No. 4: If the fuel flow correction values are all correct (between - 5 mg/st and + 5 mg/st)
Apply **Part C** of this test (**Fuel return flow measurement).**

IMPORTANT
When removing and refitting the injectors, observe the cleanliness and safety instructions (see **MR 402 (Vel Satis ph2)**, **MR 361 (Espace IV ph2) or MR 395 (Laguna II ph2) Mechanical, 13B, Diesel injection**, **Diesel injectors: Removal - Refitting**).

Section B: Confirmation of flow correction fault finding for each injector (individual correction):

Clear the faults and perform a test with the **engine idling** for at least **5 minutes**, fuel temperature **> 50°C**.
Check that no fault appears on **the CLIP diagnostic tool** and that the correction values do not reach **± 5 mg/st** to confirm the repair.
If the customer complaint is still present and the fuel flow correction values are between **-5 mg/st and + 5mg/st,** apply **part A Fuel regulation balance check for each injector (individual)** of this test **(Case No.4)**.

If one or more cylinders has injector flow correction values which reach **± 5 mg/stroke,** apply **Part A Fuel regulation balance check for each injector (individual)**, as one or more additional injectors may be defective.

GETtheMANUALS.org

TEST 7 CONTINUED 2	

Part C: Measuring fuel return flow

1. Fitting the tool:

Only carry out this part if PR063 Fuel temperature is greater than 50°C (see step 2 of Part C of this test).
Remove the engine undertray.
Disconnect the entire fuel return pipe in accordance with the following procedure (do not remove the clips):
– press the clip,
– pull the fuel return pipe end piece vertically (see the arrow on illustration 113196).

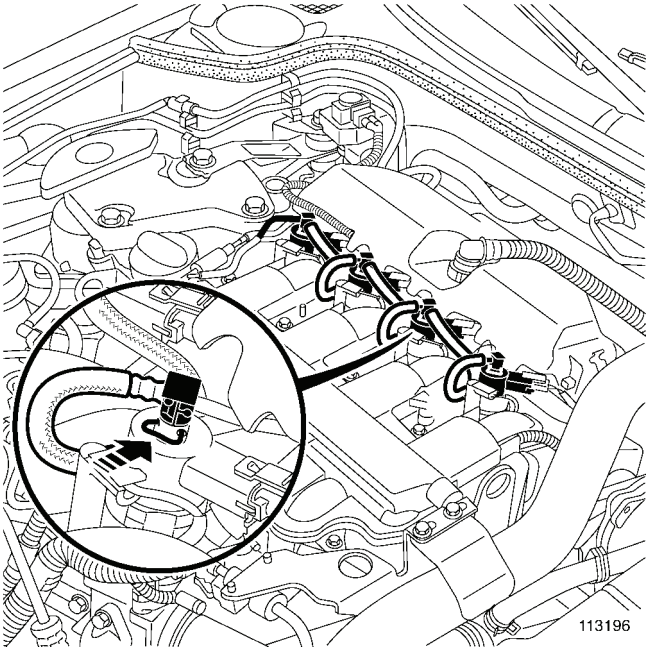

IMPORTANT
The end piece is fragile. Be careful not to break it by pulling it too hard. Replace all removed clips

GETtheMANUALS.org

TEST 7 CONTINUED 3	

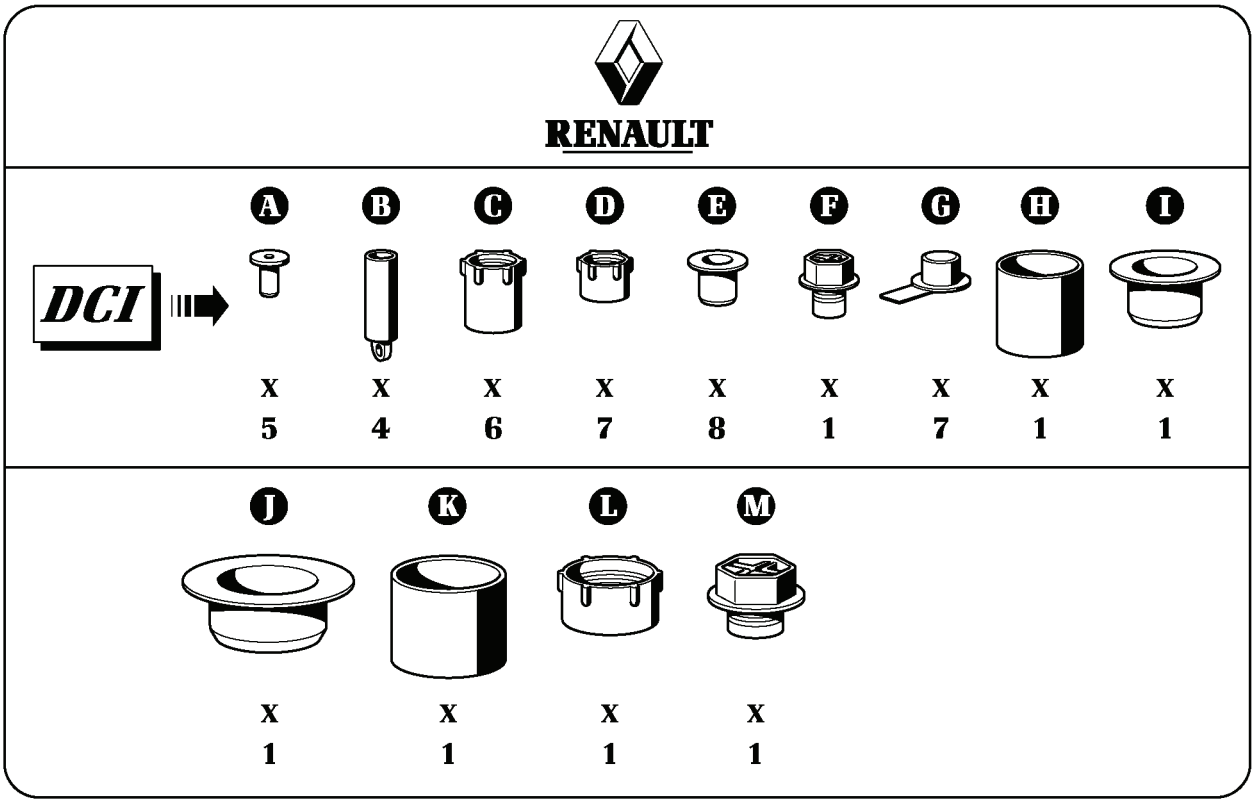

107209

Fit the blanking plugs **(B)**, from the kit (part number **77 01 208 229**), on the end pieces of the fuel return pipe.
If **Mot. 1760** is not fitted on the injectors immediately, place blanking plugs **(A)** on the injector fuel return openings.

GETtheMANUALS.org

TEST 7 CONTINUED 4	

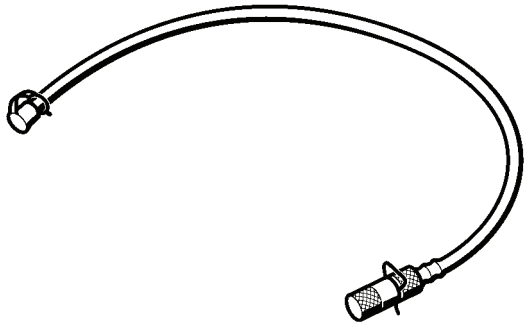

113195

On the **Mot.1760** tool pipes (see illustration **113195**), remove the clips and the plugs from the end pieces (on the right in the diagram) and leave the plugs (on the left in the diagram) in place.

GETtheMANUALS.org

TEST 7 CONTINUED 5	

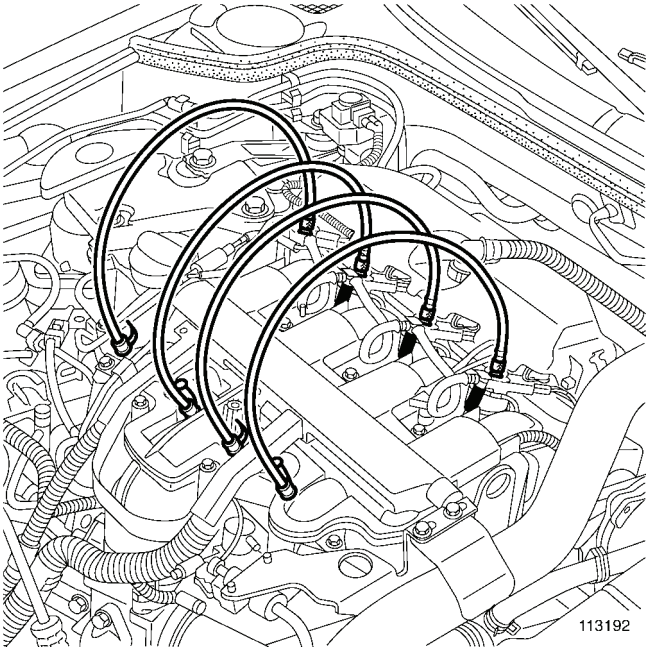

Connect the pipes from the **Mot.1760** tool to the injectors (without removing the clips on the injectors):
– press on the injector clip,
– insert the end piece in the injector fuel return opening.
– remember to fit the end piece plugs to the injector fuel return openings with the clips provided.
– Remove the plugs left on the **Mot.1760**

GETtheMANUALS.org

TEST 7 CONTINUED 6	

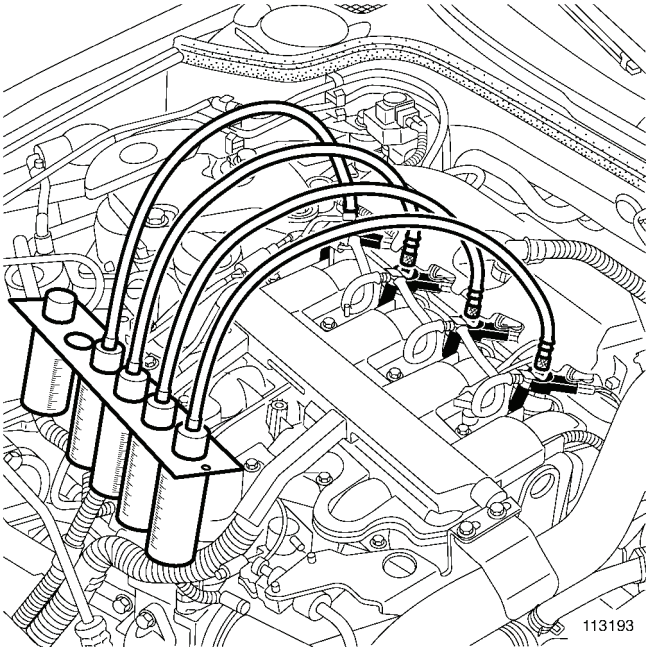

Insert the ends of the pipes into the measuring cylinders of tool **Mot.1760**; the measuring cylinders are taken from tool **Mot. 1711.**

GETtheMANUALS.org

TEST 7 CONTINUED 7	

2. Check the injector return flow balance:

Does the engine start? — NO →
- Fit **Mot. 1760** as shown in the tool fitting procedure.
- Start the vehicle or perform a **15 second** starting sequence (with ignition key).
- Measure the length travelled by the diesel fuel in the pipes of the **Mot. 1760**.
- Replace the injector if the length travelled by the fuel is more than **10 cm** compared with the average of the other three injectors.

YES ↓

- The injector return pipes must be fitted to the injectors.
- Start the engine.
- Display the **Fuel circuit** sub-function in the **CLIP diagnostic tool**.
- Raise the temperature of the engine.
- Read the diesel fuel temperature with **PR063 Fuel temperature** until the diesel fuel temperature is greater than **50°C**
- Switch off the engine.
- Fit **Mot. 1760** as shown in the installation procedure (see **step 1**).
- Check the value of the **PR038 Rail pressure**.
- Ask another Cotech to monitor the rise in fuel in the cans during engine turnover, as one of the cans will fill up quickly if one of the injectors is leaking.
- Start the engine.
- Accelerate the engine until the pressure in the rail is **550 bar**:
  * if the engine speed is **less than 3,000 rpm**, maintain this pressure.
  * if the engine speed is **greater than 3,000 rpm**, reduce the engine speed until the rail pressure is **500 bar** and maintain this pressure.
- Maintain these conditions for one minute.
- Release the accelerator pedal and maintain the idle speed for **10 seconds**.
- Switch off the engine.
- Measure the quantity of fuel contained in each measuring cylinder.
- Replace the injector if the quantity of fuel is more than **50 ml**.
- Remove **Mot. 1760** as shown in the tool removal procedure (see **step 3**).

GETtheMANUALS.org

TEST 7 CONTINUED 8	

3. Removing the tool:

IMPORTANT
Use a cleaning cloth (**part number 77 11 211 707**) to absorb fuel run-off.

Disconnect the pipe from an injector:
– press on the injector clip,
– pull vertically on the end piece of the pipe of tool **Mot. 1760** while placing a cloth on the end piece to prevent run-off.

Lift the end piece vertically so that the fuel contained in the pipes flows into the measuring cylinders of the **Mot.1760** tool.

Remove the other 3 pipes using the same procedure.

GETtheMANUALS.org

TEST 7 CONTINUED 9	

Remove the plug welds from the fuel return pipe end pieces.
Connect the complete fuel return pipe to the injectors.
Wipe up any fuel run-off using a cleaning cloth (part number **77 11 211 707**).

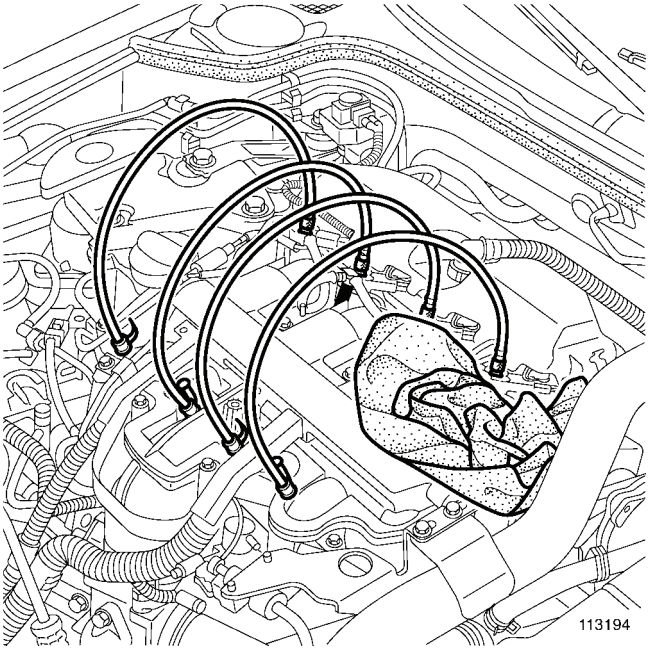

End of test 7.

GETtheMANUALS.org

TEST 8	Insufficient turbine upstream temperature

Perform a complete fault finding of the injection computer using the diagnostic tool.
Do any stored or present faults appear?

YES → Apply the procedure for dealing with the associated faults.

NO

Apply **test 1 Exhaust pipe check**
Is the exhaust pipe correct?

NO

YES

Apply **test 3 Turbocharged air inlet circuit check**
Is the inlet circuit in order?

NO

YES

Apply **test 4 Air flowmeter**
Is the air flow sensor correct?

NO

YES

Apply **test 7 Poor injector operation**
Are the injectors correct?

NO

YES

Contact the Techline.

Repair then carry out another particle filter regeneration.
Run command **SC017 Particle filter regeneration** (see **Interpretation of commands**).

– If the second regeneration is successful, it is essential to change the engine oil and replace the oil filter.

– If the second regeneration fails, contact the Techline.

EDC16C36_V04_TEST8/EDC16C36_V08_TEST8

GETtheMANUALS.org

TEST 9	Diesel fuel conformity check

WARNING
During this operation, it is essential to:
– refrain from smoking or bringing incandescent objects close to the work area,
– protect yourself against fuel splashes due to residual pressure in the pipes,
– wear safety goggles with side guards,
– wear leaktight gloves (Nitrile type).

IMPORTANT
– To avoid any corrosion or damage, protect the areas on which fuel is likely to run.
– To prevent impurities from entering the circuit, place protective plugs on all fuel circuit components exposed to the open air.

Preparations:
Weigh an empty **1300 ml** plastic cup **(part no. 77 11 171 413)** with its cover **(part no. 77 11 171 416)** using electronic scales similar to those used in body paint workshops (example: **PANDA part no. 77 11 224 995**). Record the weight of the empty plastic cup.
This type of plastic cup is used to prepare paint.

Remove **1 l** of fuel at the diesel filter outlet (see **MR 402 (Vel Satis ph2), MR 361 (Espace IV ph2) or MR 395 (Laguna II ph2), Mechanical, 19C, Tank, Fuel tank: Draining**), using a pneumatic transfer pump (**part no. 634-200**) and place it in the **1300 ml** plastic cup.
Cover the plastic cup with its cover and let the fuel settle for approximately **2 minutes**.

Is the fuel cloudy or does it separate into two parts?

YES → Presence of water in diesel fuel, the fuel is not compliant.
Drain the fuel circuit, including the tank (see **MR 402 (Vel Satis ph2), MR 361 (Espace IV ph2) or MR 395 (Laguna II ph2), Mechanical, 19C, Tank, Fuel tank: Draining**).

NO ↓

(A)

EDC16C36_V04_TEST9/EDC16C36_V08_TEST9

GETtheMANUALS.org

TEST 9 CONTINUED 1	

A

Weigh the diesel fuel and note the fuel weight after subtracting the weight of the empty plastic cup and its cover.
Does the fuel weight fall between the minimum and maximum weights given in the table below?

Calculated weight (g.)		Fuel temperature (°C)
Min. weight	Max. weight	
821	846	13
821	846	14
820	845	15
819	844	16
819	844	17
818	843	18
817	842	19
816	841	20
816	841	21
815	840	22
814	839	23
814	839	24
813	838	25

Check the fuel temperature by immersing a thermometer in the plastic cup.

YES → B

NO → C

GETtheMANUALS.org

TEST 9 CONTINUED 2	

B
YES

End of test.

C
NO

The fuel is not correct.
If the fuel weight is less than the minimum value then there is petrol in the diesel fuel.
If the fuel weight is greater than the maximum value then there is oil in the diesel fuel.
Drain the fuel circuit, including the tank (see **MR 402 (Vel Satis ph2), MR 361 (Espace IV ph2) or MR 395 (Laguna II ph2), Mechanical, 19C, Tank, Fuel tank: Draining**).

Note:
If the measured weight reaches the limit values, the measurement can be performed with a **2230 ml** plastic cup (**part no. 77 11 171 414**) and its cover (**part no. 77 11 171 417**):
– Carry out a quick test drive in order to mix the fuel, then remove **2 l** of fuel.
– Perform the test again and check the results by multiplying the limit values by 2.

Contact the Techline if you have doubts or problems with the customer.

GETtheMANUALS.org

TEST 10	Incorrect operation of the overpressure valve

Part 1. Overpressure valve return flow test:

Is the engine working?

NO

- Fit **Mot. 1760** as shown in the tool fitting procedure (see part 2).
- Press the Start button (with card).
- Measure the length travelled by the diesel fuel in the pipes of the **Mot. 1760.**
- Replace the overpressure valve if the diesel length travelled is greater than **10 cm**.

YES

- The overpressure valve return pipe must be fitted to the injector rail.
- Start the engine.
- Set the CLIP diagnostic tool to parameter reading mode.
- Raise the temperature of the engine.
- Display parameter **PR063 Fuel temperature**. Increase the diesel temperature to **above 50°C**.
- Switch off the engine.
- Fit **Mot. 1760** as shown in the tool fitting procedure (see part 2).
- Display parameter **PR038 Rail pressure**.
- Ask another Cotech to monitor the rise in fuel in the container during engine turnover, as the container will fill up quickly if the overpressure valve is leaking.
- Start the engine.
- Accelerate the engine until the pressure in the rail is **550 bar**:
  - if the engine speed is **less than 3000 rpm**, maintain this pressure,
  - if the engine speed is greater than **3000 rpm**, reduce the engine speed until the rail pressure is **500 bar** and maintain this pressure.
- Maintain these conditions for 1 min.
- Release the accelerator pedal and maintain the idle speed for **10 seconds**.
- Switch off the engine.
- Measure the length of diesel contained in the measuring cylinder**.**
- Replace the injector rail if the quantity of diesel fuel is greater than **5 ml**.
- Remove **Mot. 1760** as shown in the tool removal procedure (see part 3).

GETtheMANUALS.org

TEST10 (CONTINUED 1)	

Part 2: Fitting the tool:

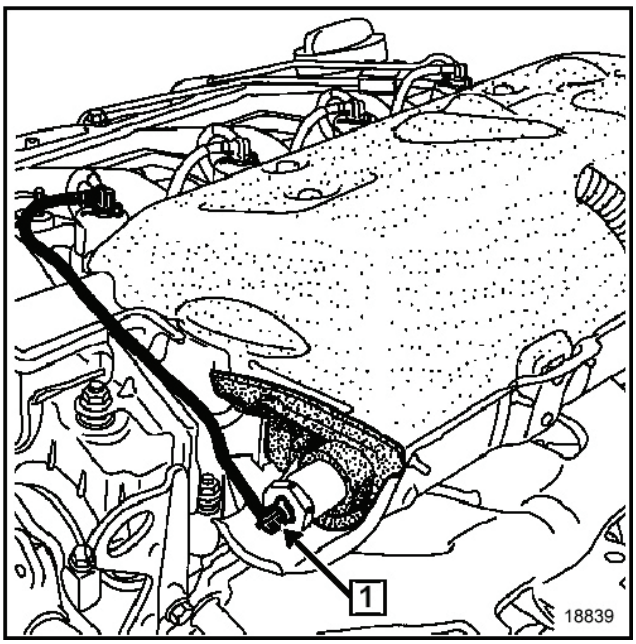

Remove the engine undertray.

Disconnect the overpressure valve return pipe according to the following procedure **(do not remove the clips):**
– press the clip,
– pull vertically on the end piece (**1**) of the fuel return pipe.

GETtheMANUALS.org

TEST10 (CONTINUED 2)	

IMPORTANT
The end piece is fragile. Be careful not to break it by pulling it too hard. Replace all removed clips.

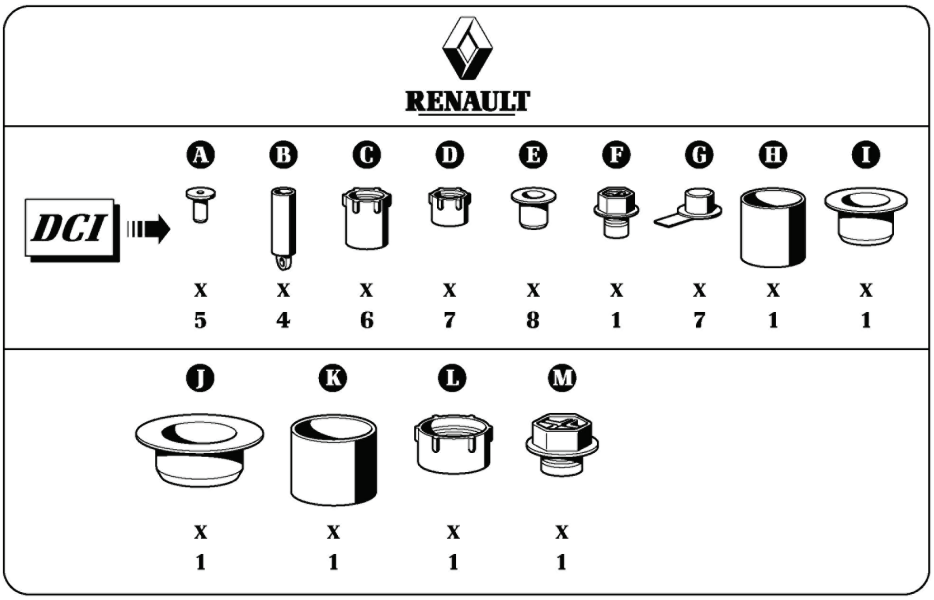

Fit the blanking plugs (**B**), from the kit (part number **77 01 208 209**), on the end pieces of the fuel return pipe. If **Mot.1760** is not fitted immediately on the overpressure valve, place a blanking plug (**A**) on the overpressure valve fuel return opening.

GETtheMANUALS.org

TEST10 (CONTINUED 3)	

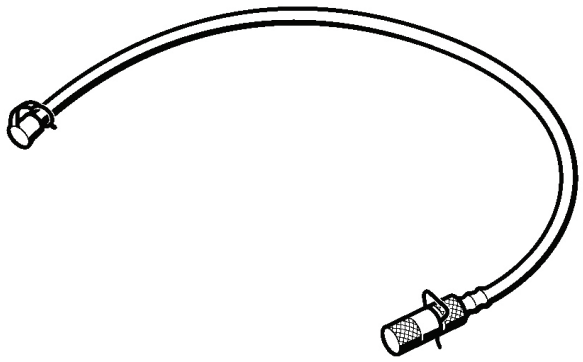

113195

Shown above is the pipe (**Mot. 1760**) with the end piece (**2**) on the right and the plug (**4**) on the left.

Remove the clip and the plug from the end piece (**2**) of the pipe of tool **Mot. 1760**, leave the plug (**4**) in place.

Connect the pipe of **Mot. 1760** to the rail overpressure valve (without removing the clip on the overpressure valve):
– press on the clip (**1**) of the overpressure valve,
– insert the end piece (**2**) in the overpressure valve fuel return opening.
– do not forget to fit the end piece plug (**2**) to the overpressure valve fuel return opening using the clip supplied.

Remove the plug (**4**).
Insert the end of the pipe in the measuring cylinder of the tool **Mot. 1760**, the measuring cylinder is retrieved from the tool **Mot.1711**.

Measure the return flow (see the procedure in **part 1** of this test).

GETtheMANUALS.org

TEST10 (CONTINUED 4)	

Part 3: Removing the tool:

IMPORTANT
Use a cleaning cloth (part number **77 11 211 707**) to absorb fuel run-off.

Disconnect the pipe of **Mot. 1760** on the overpressure valve:
– press on the clip (**1**) of the overpressure valve,
– pull horizontally on the end piece (**2**) of the pipe of **Mot. 1760** while putting a cloth on the end piece (**2**) to avoid the drips.

Lift the end piece (**2**) vertically so that the diesel fuel contained in the pipe flows into the measuring cylinder of **Mot. 1760**.

Remove the plug from the fuel return pipe end piece (**2**).

Connect the complete fuel return pipe to the overpressure valve.

Wipe up any diesel fuel run-off using a cleaning cloth (part number **77 11 211 707**).

GETtheMANUALS.org

Injection computer	**128-track** (BOSCH) Connectors: **black A 32-track, brown B 48-track, grey C 48-track**
Atmospheric pressure sensor	Integrated into the computer (BOSCH)
Injector	**0.25 Ω at + 20°C/2 Ω** max (BOSCH) **1600 bar** (**1800 bar** max.)
Flow regulator (high pressure pump)	**R = 3 ± 0.1 Ω at + 20°C** (BOSCH, pump type CP3.2+)
Rail pressure sensor	Rail pressure limiter: opening at around **1800 bar** (BOSCH, bolted on rail)
Engine speed sensor	**R = 235 ± 60 Ω at +23°C** (MGI)
Camshaft sensor	Hall effect sensor (ELECTRICFIL) **R = 10250 ± 500 Ω at +20°C** (measured between connections **3CQ** and **3FB1** of the sensor)
Turbocharger control solenoid valve	**15.4 ± 0.7 Ω at + 20°C** (PIERBURG)
Electric EGR valve	Connection code **3VP**: **+12 V** electric motor Connection code **3GC**: **+5 V** potentiometer Connection code **3JM**: potentiometer earth Connection code **3VQ**: motor earth Connection code **3EL**: potentiometer signal DIRECT CURRENT MOTOR: R between connections **3VP** and **3VQ = 1 Ω to 400 Ω at +20°C** POTENTIOMETER (Measurement only possible on SIEMENS EGR valve): R between connections **3GC** and **3JM**: **3.9 kΩ < X < 9.1 kΩ at + 20°C** (SIEMENS (square connector) or Continental (flat connector + adapter attachment)
EGR bypass solenoid valve	**46 ± 3 W** at +25°C (PIERBURG)
Electric damper valve	DIRECT CURRENT MOTOR (VDO)
Air flow sensor	Connection code **3ABQ**: air temperature signal Connection code **3DW**: flowmeter earth Connection code **3KJ**: **+5 V** flowmeter Connection code **3FB2**: **+12 V** battery Connection code **3DV**: air flow signal Connection code **3DU**: battery earth (SIEMENS)

GETtheMANUALS.org

Air temperature sensor	**R = 3714 Ω ± 161 at + 10°C/** **2448 Ω ± 96 at + 20°C/** **1671 Ω ± 59 at + 30°C**
Coolant temperature sensor	Connection code **3JK**: Earth, Connection code **3C**: Signal (ELTH type) **R = 2252 Ω ± 112 Ω at 25°C/** **811 Ω ± 39 Ω at 50°C /** **283 Ω ± 8 Ω at 80°C**
Diesel fuel temperature sensor	Connection code **3FAB**: Signal, Connection code **3LD**: Earth (ELTH type) **R = 3820 Ω ± 282 Ω at + 10°C/** **2050 Ω ± 100 Ω at + 25°C/** **810 Ω ± 47 Ω at +50°C**
Accelerator pedal sensor	**R gang 1 = 1700 ± 900 Ω (F9Q) / 1200 ± 480 Ω (G9T)** **R gang 2 = 2850 ± 2050 Ω (F9Q) / 1700 ± 680 Ω (G9T)**
Heater plug	**R = 0.6 Ω at + 20°C / 2 Ω max** Maximum current drawn: **28 A at 0 sec / 12 A at 10 sec / 7 A** after **30 seconds**
Turbine upstream temperature sensor	Connection code **3ABT**: **Earth**, Connection code **3ABS**: **Signal** (NTK type)
Particle filter differential pressure sensor	Connection code **3AAQ**: **5 V**, Connection code **3TM**: **Earth**, Connection code **3TL**: **Signal** (BOSCH)
Temperature sensor upstream of the particle filter	Connection code **3TD**: **Signal**, Connection code **3XT**: **Earth** (DENZO)
Temperature sensor downstream of the particle filter	Connection code **3TG**: **Signal**, Connection code **3XU**: **Earth** (DENZO)
Water in diesel fuel sensor	According to application (ZERTAN)

(R = Resistance)

GETtheMANUALS.org

VEL SATIS

1 Engine and peripherals

13B DIESEL INJECTION

DENSO Isuzu
Program No.: BF
Vdiag No.: 04, 08, 0C

Fault finding - Introduction	13B - 2
Fault finding - Cleanliness guidelines	13B - 7
Fault finding - System operation	13B - 9
Fault finding - Allocation of computer tracks	13B - 14
Fault finding - Replacement of components	13B - 19
Fault finding - Configuration and programming	13B - 20
Fault finding - Fault summary table	13B - 21
Fault finding - Interpretation of faults	13B - 24
Fault finding - Conformity check	13B - 130
Fault finding - Status summary table	13B - 167
Fault finding - Interpretation of statuses	13B - 168
Fault finding - Parameter summary table	13B - 195
Fault finding - Command summary table	13B - 197
Fault finding - Interpretation of commands	13B - 198
Fault finding - Customer complaints	13B - 210
Fault finding - Fault Finding Chart	13B - 212
Fault finding - Test	13B - 227
Fault finding - Glossary	13B - 246

V4 **Edition Anglaise**

"The repair procedures given by the manufacturer in this document are based on the technical specifications current when it was prepared.

The procedures may be modified as a result of changes introduced by the manufacturer in the production of the various component units and accessories from which his vehicles are constructed."

All rights reserved by Renault s.a.s.

Copying or translating, in part or in full, of this document or use of the service part reference numbering system is forbidden without the prior written authority of Renault s.a.s.

© Renault s.a.s. 2008

GETtheMANUALS.org

1. SCOPE OF THIS DOCUMENT

This document presents the fault finding procedure applicable to all computers with the following specifications:

Vehicle(s): **Vel Satis phase 1 & 2**
Espace IV phase 1
Engine type: **P9X701**
Function concerned: **Diesel injection**

Computer name: **DENSO Isuzu**
Program no.: **BF**
Vdiag no.: **04, 08, 0C**

2. PREREQUISITES FOR FAULT FINDING

Documentation type

Fault finding procedures (this manual):
– Assisted fault finding (integrated into the diagnostic tool), Dialogys.

Wiring Diagrams:
– "Wiring Diagrams" Technical Note for the vehicle (Visu-Schéma CD-ROM).

Type of diagnostic tools
– CLIP + CAN probe

Special tooling required

Special tooling required	
	Multimeter
Elé. 1681	Universal bornier

3. RECAP

Procedure

To run fault finding on the vehicle's computers, switch on the ignition in fault finding mode (forced + after ignition feed).

Proceed as follows:
– vehicle card in reader,
– press and hold start button (longer than **5 seconds**) with start-up conditions not fulfilled,
– connect the diagnostic tool and perform the required operations.

To **cut off + after ignition**, proceed as follows:
– disconnect the diagnostic tool,
– press the Start button twice briefly (less than **3 seconds**),
– ensure that the + after ignition feed has been cut off by checking that the computer indicator lights on the instrument panel have gone out.

GETtheMANUALS.org

Faults

Faults are declared as either present or stored (depending on whether they appeared in a certain context and have disappeared since, or whether they remain present but have not been diagnosed within the current context).

The **present** or **stored** status of faults should be taken into consideration when the **diagnostic tool** is switched on after the + after ignition feed (without any system components being active).

For a **present fault**, apply the procedure described in the **Interpretation of faults** section.

For a **stored fault**, note the faults displayed and apply the instructions in the **Notes** section.

If the fault is **confirmed** when the instructions in the Notes section are applied, the fault is present. Deal with the fault

If the fault is **not confirmed**, check:
- the electrical lines which correspond to the fault,
- the connectors for these lines (for oxidation, bent pins, etc.),
- the resistance of the component detected as faulty,
- the condition of the wires (melted or split insulation, wear).

Conformity check

The aim of the conformity check is to check data that does not produce a fault on the **diagnostic tool** because the data is inconsistent. Therefore, this stage is used to:

- carry out fault finding on faults that do not have a fault display, and which may correspond to a customer complaint.
- check that the system is operating correctly and that there is no risk of a fault recurring after repairs.

This section gives the fault finding procedures for statuses and parameters and the conditions for checking them.

If a status is not behaving normally or a parameter is outside the permitted tolerance values, consult the corresponding fault finding page.

Customer complaints - Fault finding chart

If the test with the **diagnostic tool** is OK but the customer complaint is still present, the fault should be processed by **customer complaints**.

A synopsis of the general procedure to follow is provided on the following page in the form of a flow chart.

GETtheMANUALS.org

4. FAULT FINDING PROCEDURE

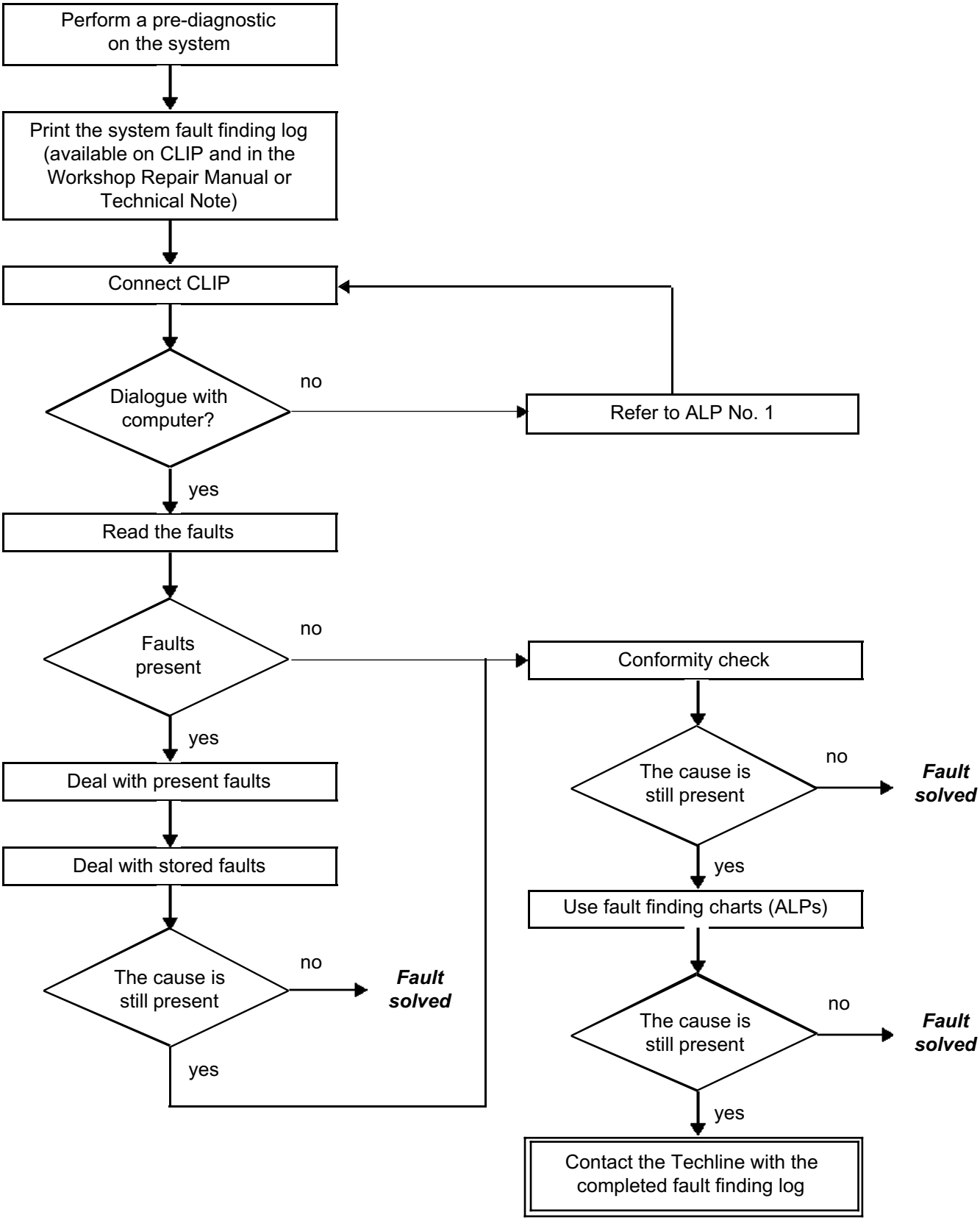

GETtheMANUALS.org

4. FAULT FINDING PROCEDURE (continued)

Wiring check

Fault finding problems
Disconnecting the connectors and/or manipulating the wiring harness may temporarily remove the cause of a fault.
Electrical measurements of voltage, resistance and insulation are generally correct, especially if the fault is not present when the analysis is made (stored fault).

Visual inspection
Look for damage under the bonnet and in the passenger compartment.
Carefully check the fuses, insulators and wiring harness routing.
Look for signs of oxidation.

Tactile inspection
While manipulating the wiring harness, use the diagnostic tool to note any change in fault status from stored to present.
Make sure that the connectors are properly locked.
Apply light pressure to the connectors.
Twist the wiring harness.
If there is a change in status, try to locate the source of the fault.

Inspection of each component
Disconnect the connectors and check the appearance of the clips and tabs, as well as the crimping (no crimping on the insulating section).
Make sure that the clips and tabs are properly locked in the sockets.
Check that no clips or tabs have been dislodged during connection.
Check the clip contact pressure using an appropriate model of tab.

Resistance check
Check the continuity of entire lines, then section by section.
Look for a short circuit to earth, to **+ 12 V** or to another wire.

If a fault is detected, repair or replace the wiring harness.

GETtheMANUALS.org

5. FAULT FINDING LOG

IMPORTANT

IMPORTANT
Any fault on a complex system requires thorough fault finding with the appropriate tools. The FAULT FINDING LOG, which should be completed during the procedure, enables you to keep track of the procedure which is carried out. It is an essential document when consulting the manufacturer.

IT IS THEREFORE MANDATORY TO FILL OUT A FAULT FINDING LOG EACH TIME FAULT FINDING IS CARRIED OUT.

You will always be asked for this log:

- when requesting technical assistance from Techline,
- for approval requests when replacing parts for which approval is mandatory,
- to be attached to monitored parts for which reimbursement is requested. The log is needed for warranty reimbursement, and enables better analysis of the parts removed.

6. SAFETY ADVICE

Safety rules must be observed during any work on a component to prevent any damage or injury:

- check the battery voltage to avoid incorrect operation of computer functions,
- Use the proper tools.

GETtheMANUALS.org

I - RISKS ASSOCIATED WITH CONTAMINATION

The high pressure direct injection system is highly sensitive to contamination. The risks associated with contamination are:
– damage to or destruction of the high pressure injection system,
– components jamming,
– components losing seal integrity.

All After-Sales operations must be performed under very clean conditions. This means that no impurities (particles a few microns in size) should have entered the system during dismantling.

The cleanliness principle must be applied from the filter to the injectors.

What are the sources of contamination?
– metal or plastic swarf,
– paint,
– fibres:
  – from cardboard,
  – from brushes,
  – from paper,
  – from clothing,
  – from cloths,
– foreign bodies such as hair,
– ambient air
– etc.

IMPORTANT
Cleaning the engine using a high pressure washer is prohibited because of the risk of damaging connections. In addition, moisture may collect in the connectors and create electrical connection faults.

II - NOTES TO BE FOLLOWED BEFORE ANY OPERATION

IMPORTANT
Before any work is carried out on the high pressure injection system, protect:
– the accessories and timing belts,
– the electrical accessories, (starter, alternator, electric power-assisted steering pump),
– the flywheel surface, to prevent any diesel from running onto the clutch friction plate.

Check that you have plugs for the unions to be opened (set of plugs available from the Parts Department). The plugs are single-use only. After use, they must be discarded (once used they are soiled and cleaning is not sufficient to make them reusable). Unused plugs must be discarded.

GETtheMANUALS.org

Check that you have hermetically resealable plastic bags for storing removed parts. Parts stored in this way will be less susceptible to the risk of contamination. The bags are to be used once only, and discarded after use.

Use lint-free cleaning cloths (cloth part number **77 11 211 707**). Using normal cloth or paper is prohibited. They are not lint-free and could contaminate the fuel circuit. Each cloth should only be used once.

Use fresh cleaning agent for each operation (used cleaning agent is contaminated). Pour it into an uncontaminated container.

For each operation, use a clean brush in good condition (the brush must not shed its bristles).

Use a brush and cleaning agent to clean the unions to be opened.

Blast compressed air over the cleaned parts (tools, workbench, the parts, unions and injection system zones). Check that no bristles remain.

Wash your hands before and during the operation if necessary.

When wearing leather protective gloves cover them with latex gloves to prevent contamination.

III - INSTRUCTIONS TO BE FOLLOWED DURING THE OPERATION

As soon as the circuit is open, all openings must be plugged to prevent impurities from entering the system. The plugs to be used are available from the Parts Department. The plugs must not be reused under any circumstances.

Seal the pouch shut, even if it has to be opened shortly afterwards. Ambient air carries contamination.

All components removed from the injection system must be stored in a hermetically sealed plastic bag once they have been plugged.

Using a brush, cleaning agent, air gun, sponge or normal cloth is strictly prohibited once the circuit has been opened. These items could allow contamination to enter the system.

A new component replacing an old one must not be removed from its packaging until it is to be fitted to the vehicle.

GETtheMANUALS.org

The high pressure injection system is designed to deliver a precise quantity of diesel fuel to the engine at a set moment.
It is fitted with a **121-track** computer made by **DENSO ISUZU**

The system comprises:
- a priming pump,
- a diesel filter fitted with a heater,
- a high pressure pump with two pumping pistons,
- two high pressure regulators attached to the pump,
- an injector rail,
- a diesel fuel pressure sensor built into the rail,
- a pressure limiter,
- six solenoid injectors,
- a diesel fuel temperature sensor,
- a coolant temperature sensor,
- an air inlet temperature sensor (Vdiag 04, 08 only),
- an oil temperature sensor (Vdiag 0C only),
- a cylinder reference sensor,
- a turbocharging pressure sensor,
- an exhaust gas recirculation solenoid valve,
- an accelerator pedal potentiometer,
- an atmospheric pressure sensor integrated into the injection computer,
- an injection computer,
- a flow sensor (fitted with an OBD air temperature sensor),
- a turbocharging limiter solenoid valve,
- a damper flap solenoid valve.

The "**common rail**" high pressure direct injection system works sequentially (based on the multipoint injection system for petrol engines).

This new injection system reduces operating noise, reduces the volume of pollutant gases and particles and produces high engine torque at low engine speeds thanks to a pre-injection procedure.

The high pressure pump generates the high pressure and transmits it to the injector rail. The actuators located on the pump control the quantity of diesel fuel supplied based on the demand determined by the computer. The rail supplies each injector through a steel pipe.

GETtheMANUALS.org

a) The computer:

This determines the injection pressure value necessary for the engine to operate correctly and then controls the pressure regulators. It checks that the pressure value is correct by analysing the value transmitted by the pressure sensor located on the rail.
It determines the injection timing required to deliver the right quantity of diesel fuel and the moment when injection should start.
Controls each injector electrically and individually after determining these two values.

The flow injected into the engine is determined by:
- the duration of injector control,
- the rail pressure (regulated by the computer),
- the injector opening and closing speed,
- the needle stroke (determined by a constant for the type of injector),
- the nominal hydraulic flow of the injector (specific to each injector),
- the pedal load,
- the engine speed.

The computer manages:
- idling regulation,
- exhaust gas flow reinjection to the inlet,
- the fuel supply (advance, flow and rail pressure),
- the fan unit control via the Switching and Protection Unit (centralised coolant temperature management function),
- the air conditioning (cold loop function),
- the cruise control/speed limiter function,
- pre-post heating control,
- fault warning lights via the multiplex network.

The high pressure pump supplies the rail whose pressure is controlled by the fuel flow actuator for filling and by the injector valves for discharging. This compensates for pressure drops. The flow actuator allows the high pressure pump to supply the exact quantity of diesel fuel required to maintain the pressure in the rail. This component minimises the heat generated and improves engine output.
In order to discharge the rail using the injector valves, the valves are controlled by brief electrical pulses which are:
- short enough not to open the injector (passing through the feedback circuit from the injectors),
- long enough to open the valves and discharge the rail.
- multiplexed connection between the vehicle's various computers.

The fault warning lights on the instrument panel are activated via the multiplex network.

The vehicle speed signal on the instrument panel is transmitted by the ABS system computer or the WHEEL SPEED computer via a wire connection and is then transmitted via the multiplex network by the instrument panel. The main users of the vehicle speed signal are the injection computer and the airbag computer.

Some vehicles have adopted a sensor for detecting water in the diesel fuel, located in the filter. If there is water in the fuel, the orange injection and pre/postheating warning light will come on.

GETtheMANUALS.org

WARNING
The engine must not operate with:
- diesel fuel containing more than 10 % diester,
- petrol, even in tiny quantities.

The system injects diesel fuel into the engine at a pressure of up to **1600 bar**. Before each operation, check that the injector rail is depressurised and that the fuel temperature is not too high.

When working on the high pressure injection system, you must follow the cleanliness guidelines and safety advice specified in this document.

Removal of the internal parts of the pump and injectors is prohibited. Only the fuel flow actuator and the diesel fuel temperature sensor can be replaced.

For safety reasons, it is strictly prohibited to undo a high pressure pipe union when the engine is running.

It is not possible to remove the pressure sensor from the fuel rail because this may cause circuit contamination faults. If the pressure sensor fails, replace the pressure sensor, the rail and the high pressure pipes.

Supplying + 12 V directly to any component in the system is prohibited.

Ultrasonic decoking and cleaning are prohibited.

Never start the engine unless the battery is connected correctly.

Disconnect the injection computer when carrying out any welding work on the vehicle.

GETtheMANUALS.org

b) Management of cruise control/speed limiter:

When activated, the cruise control function maintains the vehicle at a preselected speed, regardless of the driving conditions encountered. Using the control buttons, the driver can increase or reduce the vehicle speed.

The cruise control function can be deactivated either using the control buttons, or by switching off the cruise control function selection switch or when system events are detected (such as the brake pedal being depressed), or when system errors are detected such as an inconsistent vehicle speed or excessive vehicle deceleration.

The cruise control function can also be temporarily suspended when the driver wants to resume control of the vehicle and exceed the selected cruising speed by depressing the accelerator pedal which then exceeds the selected fuel flow. The cruising speed is resumed when the driver releases the accelerator pedal.

The cruise control function can be reactivated and the last cruising speed can be resumed after deactivating the function for whatever reason until the vehicle ignition is switched off (i.e. for as long as computer supply not cut off). The vehicle will then attempt to return to the cruising speed using a controlled vehicle acceleration rate.

When switched on (with the selection switch), the vehicle speed limiter function limits the vehicle speed to a preset value. The driver controls the vehicle in the normal way using the accelerator pedal until the limit speed is reached. If an attempt is made to exceed this speed, the system will ignore the pedal request and will control the vehicle speed in the same way as the cruise control function, provided that the driver keeps the accelerator pedal depressed.
As with the cruise control function, the limit speed can be altered using the control buttons by pressing briefly or pressing and holding.
For safety reasons, it is possible to exceed the limit speed by rapidly depressing the accelerator pedal. The vehicle speed is then controlled by the pedal according to the driver's request. The vehicle's speed limiter is reactivated when the vehicle speed drops below the limit speed again.

The driver has the following controls for the cruise control/speed limiter function:
- accelerator pedal,
- brake pedal,
- function selection switch for selecting speed limiter or cruise control operating mode,
- controls at the steering wheel.

GETtheMANUALS.org

Instrument panel display:

The computer manages the data display on the instrument panel relating to engine operation. This involves 5 functions:
– the EOBD (European On Board Diagnostic) MIL (Malfunction Indicator Lamp),
– pre-postheating,
– the coolant temperature,
– engine faults:
  - Level 1 (non critical fault)
  - Level 2 (emergency stop).

These five functions are represented by 4 warning lights and/or messages displayed by the trip computer.

Pre-postheating warning light:

Permanently on, supplied by + after ignition feed:
indicates preheating of the plugs (automatic timed operation lasting 3 to 6 seconds).

Temperature warning/emergency stop light (level 2):

This light is used as an operation indicator light and as a system fault warning light.
It switches on for 3 seconds when a voltage is applied (automatic test procedure controlled by the instrument panel).

Permanently on: this indicates engine overheating or a level 2 fault.

If the fault reaches a critical level, the injection cuts off automatically after a few seconds. In the event of overheating, it is up to the driver whether to stop the vehicle or continue driving.

OPERATION OF INSTRUMENT PANEL WARNING LIGHTS:

Orange SERVICE non-critical fault warning light (level 1):

This warning light comes on, **along with the "check injection" message**.

The driver should carry out repairs as soon as possible.

Red STOP emergency stop warning light (level 2):

This warning light comes on, **accompanied by the "faulty injection" message.**

The driver should carry out repairs as soon as possible.

Orange OBD excess pollution warning light:

This warning light is represented by an engine, and comes on for approximately 2 seconds when the ignition is switched on, and then goes out.

Continuous lighting: indicates a fault in an engine component preventing emission control standards being met.

The driver should carry out repairs as soon as possible.

GETtheMANUALS.org

Connector A, 81-track

Track	Description
1	+ after ignition feed (main relay)
2	+ after ignition feed (main relay)
3	General earth
4	General earth
5	General earth
6	Not used
7	+ accelerator potentiometer no. 1
8	Accelerator potentiometer no. 2 signal
9	Not used
10	Cruise control/speed limiter programming control
11	– accelerator potentiometer no. 2, – inlet air temperature sensor (Vdiag 04, 08 only) or – oil temperature sensor (Vdiag OC only), – air flowmeter and cruise control/speed limiter control feedback signal
12	Not used
13	Not used
14	Not used
15	Not used
16	Not used
17	Heating element no. 3 relay control - signal (VELSATIS) and passenger compartment heating resistor no. 3 (ESPACE)
18	Fan unit relay 1 - control
19	Preheating relay control
20	Not used
21	Secondary brake pedal switch signal
22	Not used
23	Speed limiter On/Off control
24	Fuse protected + after ignition feed
25	Not used
26	accelerator potentiometer no. 2 + signal and air flow sensor + signal
27	Accelerator potentiometer no. 1 signal
28	Not used
29	Air inlet temperature sensor (Vdiag 04, 08 only) or oil temperature sensor signal (Vdiag OC only)
30	Air flow sensor signal

GETtheMANUALS.org

Connector A, 81-track (continued 1)

Track	Description
31	- accelerator potentiometer no. 1
32	Not used
33	Not used
34	Not used
35	Not used
36	Heating element no. 1 relay control (VELSATIS) and passenger compartment heating resistor no. 1 (ESPACE)
37	Not used
38	Fan unit relay 2 control
39	Not used
40	Not used
41	Not used
42	+ starting supply
43	Not used
44	Injector control unit injector 5 control (power unit)
45	Injector control unit injector 3 control (power unit)
46	Injector control unit injector 1 control (power unit)
47	Not used
48	multiplex line L signal
49	Heater plug fault finding signal 1 (plugs nos. 1, 3 and 5)
50	Diagnostic socket
51	Not used
52	Not used
53	Control - alternator load shedding relay (alternator opto-relay, refer to "**Wiring Diagrams**" Technical Note for the vehicle)
54	Not used
55	Not used
56	Heating element no. 2 relay - control (VELSATIS) and passenger compartment heating resistor no. 2 (ESPACE)
57	Not used
58	Not used
59	Not used
60	Not used
61	Not used
62	Not used

GETtheMANUALS.org

Connector A, 81-track (continued 2)

Track	Description
63	Injector control unit injector 6 control (power unit)
64	Injector control unit injector 4 control (power unit)
65	Injector control unit injector 2 control (power unit)
66	Injector control unit diagnostic signal (power unit)
67	Multiplex line H signal
68	Heater plug fault finding signal 2 (plugs 2, 4 and 6)
69	Not used
70	Not used
71	Not used
72	Not used
73	Not used
74	Not used
75	Not used
76	Control - main relay coil
77	Not used
78	Not used
79	Not used
80	Not used
81	Cruise control On/Off control

GETtheMANUALS.org

Connector B, 40 tracks

Track	Description
82	Injector correction resistance signal 2
83	Injector correction resistance signal 4
84	Injector correction resistance signal 6
85	Not used
86	Not used
87	- group 1 sensor (turbocharging pressure, fuel/rail pressure, EGR potentiometer, turbocharger position)
88	Not used
89	Not used
90	Injector correction resistance signal 1
91	Injector correction resistance signal 3
92	Injector correction resistance signal 5
93	Turbocharging pressure sensor signal
94	EGR potentiometer signal
95	- group 2 sensor (coolant temperature, injector correction resistance 1 to 6, fuel temperature)
96	Not used
97	Turbocharging solenoid valve control
98	group 1 sensor + (turbocharging pressure, fuel/rail pressure, EGR potentiometer, turbocharger position)
99	Coolant temperature sensor signal
100	Fuel temperature sensor signal
101	Turbo position sensor signal
102	Camshaft sensor + signal
103	Camshaft sensor - signal
104	Not used
105	Damper valve control - signal
106	Fuel rail pressure sensor signal 1
107	Fuel rail pressure sensor signal 2
108	Not used
109	Flow sensor OBD air temperature signal (Vdiag OC only)
110	Engine speed sensor + signal

GETtheMANUALS.org

Connector B, 40-track (continued)

Track	Description
111	Engine speed sensor - signal
112	Not used
113	Not used
114	Earth of the engine speed sensor and camshaft sensor
115	EGR solenoid valve - control
116	High pressure fuel solenoid valve 1 and 2 + signal
117	Not used
118	Not used
119	Not used
120	Fuel high pressure solenoid valve 2 - control
121	Fuel high pressure solenoid valve 1 - control

GETtheMANUALS.org

COMPUTER REPLACEMENT OR REPROGRAMMING

The system can be programmed and reprogrammed via the diagnostic socket using the RENAULT CLIP diagnostic tool (**Consult Technical Note 3585A or follow the instructions provided by the diagnostic tool**).

IMPORTANT
- **switch on the diagnostic tool (mains or cigarette lighter supply),**
- **connect a battery charger,**
- **shut down all the electrical consumers (lights, interior lights, air conditioning, radio CD, etc.),**
- **wait for the engine to cool (engine coolant temperature below 60 ˚C and air temperature below 50 ˚C).**

Every time the computer has been reprogrammed or replaced
- **switch the ignition off and then on again.**
- **start and then stop the engine (for automatic programming) and wait 40 seconds.**
- **use the diagnostic tool to carry out the following procedures:**
  1.Use the **VP010 Write VIN** command.
  2. Carry out a road test followed by another check with the diagnostic tool.

IMPORTANT
It is not possible to try an injection computer coming from the Parts Department because it will no longer be possible to use it on another vehicle.

GETtheMANUALS.org

Summary of available settings

NOTES	The settings are made to inform the vehicle computer of the vehicle VIN and the engine idling speed.

VP010: Enter VIN
This setting allows the VIN to be entered in the injection computer.
Use this command each time the computer is replaced or (re)programmed.

VP007: Decrease idling speed
This setting is used to decrease the engine's idling speed by a maximum of 50 rpm, in 10 rpm steps.

VP011: Increase idling speed
This setting is used to increase the engine's idling speed by a maximum of 50 rpm, in 10 rpm steps.

VP036: Inhibit fuel supply
This command allows you to block the diesel circuit upstream of the injectors in order to carry out an engine cylinder compression test.

VP037: End fuel supply inhibition
This command restores fuel supply to the injectors.

GETtheMANUALS.org

WARNING LIGHT MANAGEMENT

Management of instrument panel warning lights according to the faults notified.

Fault	Associated DTC code	Level 1 fault warning light (SERVICE or orange heater plugs "on" indicator light)	Level 2 fault warning light (STOP or red overheating warning light)	No fault warning light lit	OBD warning light
DF001 Coolant temperature sensor circuit	1001	CC.1/CO.0/DEF			DEF
DF003 Atmospheric pressure sensor circuit	1003	CO.0/CC.1			
DF015 Main relay control circuit	1013	CC.0	CO		
DF038 Computer	1074		1.DEF		
DF039 Air inlet temperature sensor (Vdiag 04, 08 only)	1002			CO.0/CC.1	
DF040 Cylinder 1 injector circuit	102E	CO.0	CC.1	CC/CO	CO.0
DF041 Cylinder 2 injector circuit	102F	CO.0	CC.1	CC/CO	CO.0
DF042 Cylinder 3 injector circuit	1030	CO.0	CC.1	CC/CO	CO.0
DF043 Cylinder 4 injector circuit	1031	CO.0	CC.1	CC/CO	CO.0
DF044 Cylinder 5 injector circuit	1032	CO.0	CC.1	CC/CO	CO.0
DF045 Cylinder 6 injector circuit	1033	CO.0	CC.1	CC/CO	CO.0
DF055 Turbocharging pressure regulation circuit	1015	CO/ CC CO.0/CC.1/ 1.DEF/2.DEF/ 3.DEF			
DF056 Air flow sensor circuit	1006	CC.1/CO.0/DEF			CC.1/CO.0/ DEF
DF058 Oil temperature sensor circuit (Vdiag OC only)	0195			CO.0/CC.1	
DF089 Inlet manifold pressure sensor circuit	1004	CC.1/CO.0/DEF			

GETtheMANUALS.org

Fault	Associated DTC code	Level 1 fault warning light (SERVICE or orange heater plugs "on" indicator light)	Level 2 fault warning light (STOP or red overheating warning light)	No fault warning light lit	OBD warning light
DF098 Fuel temperature sensor circuit	1005			CC.1/CO.0	
DF112 Cylinder reference circuit	1008	1.DEF/2.DEF	3.DEF		
DF154 Flywheel signal sensor circuit	1007	1.DEF/2.DEF	6		1.DEF/ 2.DEF
DF175 Supply	102A		2.DEF	1.DEF	
DF176 Low speed fan unit circuit	1017			CO.0/CC.1	
DF177 High speed fan unit circuit	1018			CO.0/CC.1	
DF186 Heater plug circuit	1016			CC.0/CO.1	
DF188 Starting signal	102B			CO.0/CC.1	
DF196 Pedal sensor circuit gang 1	100A	CC/CO.0/1.DEF			
DF197 Fuel pressure information	1009	CO.0/CC.1/ 1.DEF	2.DEF		
DF198 Pedal sensor circuit gang 2	100B	CC/CO.0			
DF208 Fuel pressure solenoid valve circuit	1022	3.DEF/4.DEF	1.DEF/2.DEF		
DF209 EGR valve position sensor circuit	100C	CC.1/CO.0			CC.1/CO.0
DF216 Sensor supply voltage no. 1	100F	DEF			
DF217 Sensor supply voltage no. 2	1010	DEF			
DF218 Microcontroller	103F		DEF		

GETtheMANUALS.org

Fault	Associated DTC code	Level 1 fault warning light (SERVICE or orange heater plugs "on" indicator light)	Level 2 fault warning light (STOP or red overheating warning light)	No fault warning light lit	OBD warning light
DF262 Heater plug group circuit no. 1	1026			DEF	
DF263 Heater plug group circuit no. 2	1027			DEF	
DF264 Power Unit (EDU)	1083		1.DEF		
DF265 Injector no. 1	105E			DEF	
DF266 Injector no. 2	105F			DEF	
DF267 Injector no. 3	1060			DEF	
DF268 Injector no. 4	1061			DEF	
DF269 Injector no. 5	1062			DEF	
DF270 Injector no. 6	1063			DEF	
DF324 OBD air temperature sensor circuit (Vdiag 08, OC only)	1801			CC.1/CO.0	
DF325 Exhaust gas recirculation function	1014	CC.1/CO.0 1.DEF/2.DEF / 3.DEF			CC.1/CO.0/ 1.DEF/ 2.DEF/ 3.DEF
DF374 Computer	1075		1.DEF		
DF767 Power Unit (EDU)	1084		1.DEF		
DF768 Power Unit (EDU)	1085		1.DEF		
DF769 Oil temperature (Vdiag OC only)	0298			1.DEF	

***EDU: Electronic Drive Unit**

GETtheMANUALS.org

DF001 PRESENT OR STORED	COOLANT TEMPERATURE SENSOR CIRCUIT CO.0 : Open circuit or short circuit to earth CC.1 : Short circuit to + 12 V DEF : Inconsistent data

NOTES	**Special notes:** Use bornier **Elé. 1681** for all operations on the engine management computer connectors.

CO.0	***NOTES***	**Conditions for applying the fault finding procedure to stored faults:** The fault is declared as present if: – + after ignition feed present, – the coolant temperature sensor voltage is less than **0.12 V**.

Manipulate the wiring harness between the diesel computer and the coolant temperature sensor in order to detect a status change (present ↔ stored).
Look for possible damage to the harness, and check **the connection and the condition** of the coolant temperature sensor and its connections.
Repair if necessary.

If the fault is still present, check that the thermostat is working correctly.
Check the fill level and sealing of the cooling circuit (see **MR 353, MR 402 or MR 361 Mechanical, 19A, Cooling, Checks**).

Check for **insulation against earth, continuity and the absence of interference resistance** on the following connection:

Coolant temperature sensor **track 1** ⟶ **track B 99** of the diesel computer

Repair if necessary.

Check the **insulation from + 5 V and + 12 V, continuity and absence of interference resistance** on the following connection:

Coolant temperature sensor **track 2** ⟶ **track B 95** of the diesel computer

Repair if necessary.

Measure the **resistance** of the coolant temperature sensor between **tracks 1** and **2** of its connector.
Replace the sensor if the **resistance** is not:
3515 ± 200 Ω at 20 °C
992 ± 100 Ω at 50 °C
475 ± 50 Ω at 70 °C
244 ± 25 Ω at 90 °C

Clear the faults from memory and then start the engine.

If the fault is still present**, contact the Techline**.

AFTER REPAIR	Deal with any faults detected by the diagnostic tool. Clear the computer memory. Carry out a road test followed by another check with the **diagnostic tool**.

GETtheMANUALS.org

DF001 **CONTINUED 1**	

CC.1	***NOTES***	**Conditions for applying the fault finding procedure to stored faults:** The fault is declared as present if: – + after ignition feed present, – the coolant temperature sensor voltage is greater than **4.9 V**.

Manipulate the wiring harness between the diesel computer and the coolant temperature sensor in order to detect a status change (present ↔ stored).
Look for possible damage to the harness, and check **the connection and the condition** of the coolant temperature sensor and its connections.
Repair if necessary.

If the fault is still present, check that the thermostat is working correctly.
Check the fill level and sealing of the cooling circuit (see **MR 353, MR 402 or MR 361 Mechanical, 19A, Cooling, Checks**).

Check for **insulation against earth, continuity and the absence of interference resistance** on the following connection:

Coolant temperature sensor **track 1** ⟶ **track B 99** of the diesel computer

Repair if necessary.

Check the **insulation from + 5 V and + 12 V, continuity and absence of interference resistance** on the following connection:

Coolant temperature sensor **track 2** ⟶ **track B 95** of the diesel computer

Repair if necessary.

Measure the **resistance** of the coolant temperature sensor between **tracks 1** and **2** of its connector.
Replace the sensor if the **resistance** is not:
3515 ± 200 Ω at 20 °C
992 ± 100 Ω at 50 °C
475 ± 50 Ω at 70 °C
244 ± 25 Ω at 90 °C

Clear the faults from memory and then start the engine.

If the fault is still present**, contact the Techline**.

AFTER REPAIR	Deal with any faults detected by the diagnostic tool. Clear the computer memory. Carry out a road test followed by another check with the **diagnostic tool**.

GETtheMANUALS.org

DF001 **CONTINUED 2**	

DEF	***NOTES***	**Priority when dealing with a number of faults:** Deal with **DF001 CC.0** and **CO.1** first if they are present or stored.
		Conditions for applying the fault finding procedure to stored faults: The fault is declared as present if: – following an engine start. – the battery voltage is low, – fault detection time between **14** and **19 min**.

Check the condition of the battery and the charging circuit (see **Technical Note 6014A Charging circuit check**). Check **the condition of the vehicle earths**.
Manipulate the wiring harness between the diesel computer and the coolant temperature sensor in order to detect a status change (present ↔ stored). Look for possible damage to the harness, and check **the connection and the condition** of the coolant temperature sensor and its connections. Repair if necessary.
If the fault is still present, check that the thermostat is working correctly. Check the fill level and sealing of the cooling circuit (see **MR 353, MR 402 or MR 361 Mechanical, 19A, Cooling, Checks**).
Check for **insulation against earth, continuity and the absence of interference resistance** on the following connection: Coolant temperature sensor **track 1** ⟶ **track B 99** of the diesel computer Repair if necessary.
Check the **insulation from + 5 V and + 12 V, continuity and absence of interference resistance** on the following connection: Coolant temperature sensor **track 2** ⟶ **track B 95** of the diesel computer Repair if necessary.
Measure the **resistance** of the coolant temperature sensor between **tracks 1** and **2** of its connector. Replace the sensor if the **resistance** is not: **3515 ± 200 Ω at 20 °C** **992 ± 100 Ω at 50 °C** **475 ± 50 Ω at 70 °C** **244 ± 25 Ω at 90 °C**
Clear the faults from memory and then start the engine.
If the conformity check does not detect the fault, contact the Techline.

AFTER REPAIR	Deal with any faults detected by the diagnostic tool. Clear the computer memory. Carry out a road test followed by another check with the **diagnostic tool**.

GETtheMANUALS.org

DF003 PRESENT OR STORED	ATMOSPHERIC PRESSURE SENSOR CIRCUIT CO.0 : Open circuit or short circuit to earth CC.1 : Short circuit to + 12 V

NOTES	**Special notes:** Use bornier **Elé. 1681** for all operations on the engine management computer connectors.

CO.0	***NOTES***	**Conditions for applying the fault finding procedure to stored faults:** The fault is declared as present if: – the atmospheric pressure sensor voltage is less than **1.16 V**. – the engine is started, – Fault detection time **3 seconds**.

Clear the fault with the diagnostic tool.
If the fault is still present, deal with any other faults. If the fault is still present, **contact Techline**.

CC.1	***NOTES***	**Conditions for applying the fault finding procedure to stored faults:** The fault is declared as present if: – the atmospheric pressure sensor voltage is greater than **4.6 V**. – the engine is started, – Fault detection time **3 seconds**.

Clear the fault with the diagnostic tool.
If the fault is still present, deal with any other faults. If the fault is still present, **contact Techline**.

AFTER REPAIR	Deal with any faults detected by the diagnostic tool. Clear the computer memory. Carry out a road test followed by another check with the **diagnostic tool**.

GETtheMANUALS.org

DF015 STORED	MAIN RELAY control CIRCUIT CO : Open circuit CC.0 : Short circuit to earth

NOTES	**Conditions for applying the fault finding procedure to stored faults:** The fault is declared as present if: – the computer detects an open circuit on **track A 76** or absence of supply on **tracks A 1** and **A 2**, – the engine is switched off.
	Special notes: Use bornier **Elé. 1681** for all operations on the engine management computer connectors.

Manipulate the wiring harness between the diesel computer and the main relay (injection locking relay) to detect a status change (present ↔ stored)
Look for possible damage to the harness, and check **the connection and the condition** of the main relay and its connections.
Repair if necessary.

Check the computer supply voltage **F1 (15A)** fuse, repair if necessary.

Check **the continuity** of the following line:

Main relay **track 15** ⟶ Diesel computer **track A 76**

Repair if necessary.

Check for **insulation from earth, continuity and the absence of interference resistance** on the following connections:

Main relay **track 13** ⟶ Diesel computer **track A 1**

Main relay **track 13** ⟶ Diesel computer **track A 2**

Repair if necessary.

Change over the main relay with another similar relay.
If the fault disappears, replace the relay.

Check for **+ 12 V** on **tracks 16** and **14** of the relay.
Repair if necessary.

Clear the fault memory and start the engine.
If the fault is still present, **contact Techline**.

AFTER REPAIR	Deal with any faults detected by the diagnostic tool. Clear the computer memory. Carry out a road test followed by another check with the **diagnostic tool**.

GETtheMANUALS.org

DF038 PRESENT OR STORED	COMPUTER 1.DEF: Internal electronic fault

NOTES	**Conditions for applying the fault finding procedure to stored faults:** The fault is declared present if the computer detects an internal electrical malfunction.
	Special notes: Use bornier **Elé. 1681** for all operations on the engine management computer connectors.

If the fault is **stored** or **present**, clear the fault from the computer memory.
Switch off the ignition, wait **40 s**, then switch the ignition on again and re-establish dialogue.

If the fault is still present**, contact the Techline**.

AFTER REPAIR	Deal with any faults detected by the diagnostic tool. Clear the computer memory. Carry out a road test followed by another check with the **diagnostic tool**.

GETtheMANUALS.org

DF039 PRESENT OR STORED	INLET AIR TEMPERATURE SENSOR CIRCUIT CO.0 : Short circuit to earth CC.1 : Short circuit or open circuit to + 12 V

NOTES	**Special notes:** Use bornier **Elé. 1681** for all operations on the engine management computer connectors. **Only affects the OBD air temperature sensor at the flow sensor.** **ONLY FOR VDIAG 04 AND 08**

CO.0	***NOTES***	**Conditions for applying the fault finding procedure to stored faults:** The fault is declared as present if: – the air temperature sensor voltage is less than **0.12 V**. – + after ignition feed present.

Move the wiring harness between the diesel computer and the air temperature sensor in order to detect a status change (present ↔ stored).
Look for possible damage to the harness, and check **the connection and the condition** of the air temperature sensor and its connections.
Repair if necessary.

Check for **insulation from earth, continuity and the absence of interference resistance** on the following connections:

Diesel computer **track A 11** ⟶ **Earth**

Repair if necessary.

Measure the **resistance** of the air temperature sensor between **tracks 1** and **2** of its connector.
Replace the sensor if the **resistance** is not:
5728 ± 300 Ω at 10 °C
3515 ± 200 Ω at 20 °C
2268 ± 100 Ω at 30 °C

If the fault is still present, deal with any other faults.

If the fault is still present, contact the Techline.

AFTER REPAIR	Deal with any faults detected by the diagnostic tool. Clear the computer memory. Carry out a road test followed by another check with the **diagnostic tool**.

GETtheMANUALS.org

DF039 **CONTINUED**	

		Priority when dealing with a number of faults: Deal with fault **DF001 Coolant temperature sensor circuit** first, if it is present or stored.
CC.1	***NOTES***	**Conditions for applying the fault finding procedure to stored faults:** The fault is declared as present if: – the air temperature sensor voltage is less than **4.9 V**. – + after ignition present, – engine coolant temperature above **- 25 ˚C**.

Move the wiring harness between the diesel computer and the air temperature sensor in order to detect a status change (present ↔ stored).
Look for possible damage to the harness, and check **the connection and the condition** of the air temperature sensor and its connections.
Repair if necessary.

Check the **insulation, continuity and absence of interference resistance** on the following connections:

Air temperature sensor **track 2** ⟶ Diesel computer **track A 11**

Air temperature sensor **track 1** ⟶ Diesel computer **track A 29**

Repair if necessary.

Measure the **resistance** of the air temperature sensor between **tracks 1** and **3** of its connector.
Replace the sensor if the **resistance** is not:
5728 ± 300 Ω at 10 ˚C
3515 ± 200 Ω at 20 ˚C
2268 ± 100 Ω at 30 ˚C

If the fault is still present, deal with any other faults.

If the fault is still present, contact the Techline.

AFTER REPAIR	Deal with any faults detected by the diagnostic tool. Clear the computer memory. Carry out a road test followed by another check with the **diagnostic tool**.

GETtheMANUALS.org

DF040 PRESENT OR STORED	CYLINDER 1 INJECTOR CIRCUIT CC : Short circuit CO : Open circuit CO.0 : Open circuit or short circuit to earth CC.1 : Short circuit to + 12 V

NOTES	**Special notes:** Use bornier **Elé. 1681** for all operations on the engine management computer connectors.

CC	***NOTES***	**Conditions for applying the fault finding procedure to stored faults:** The fault is declared as present if: – the line voltage is greater than **0.2 V**, – ignition on, – the engine is stopped.

Manipulate the wiring harness between the diesel computer and injector 1 to detect a change in status (present ↔ stored).
Look for any harness damage, and check **the condition and connection** of injector 1 and its connections.
Repair if necessary.

Check the **continuity, insulation from + 12 V and the absence of interference resistance** for the following connection:

Diesel computer **track B 95** ⟶ **track 2** of injector 1

Repair if necessary.

Measure the **resistance** of the injector 1 coil between **tracks 1** and **2** of the injector connector.
Replace the injector if there is a **short circuit (R = 0 Ω)** or an **open circuit (resistance = infinity)**.

If the fault is still present**, contact the Techline**.

AFTER REPAIR	Deal with any faults detected by the diagnostic tool. Clear the computer memory. Carry out a road test followed by another check with the **diagnostic tool**.

GETtheMANUALS.org

DF040 **CONTINUED 1**	

CO	***NOTES***	**Conditions for applying the fault finding procedure to stored faults:** The fault is declared as present if: – the line voltage is greater than **4.8 V**. – ignition on, – the engine is stopped.

Manipulate the wiring harness between the diesel computer and injector 1 to detect a change in status (present ↔ stored).
Look for any harness damage, and check **the condition and connection** of injector 1 and its connections.
Repair if necessary.

Check for **insulation against earth, continuity and the absence of interference resistance** on the following connection:

Diesel computer **track B 90** ⟶ **track 1** of injector 1

Repair if necessary.

Measure the **resistance** of the injector 1 coil between **tracks 1** and **2** of the injector connector.
Replace the injector if there is a **short circuit (R = 0 Ω)** or an **open circuit (resistance = infinity)**.

If the fault is still present**, contact the Techline**.

AFTER REPAIR	Deal with any faults detected by the diagnostic tool. Clear the computer memory. Carry out a road test followed by another check with the **diagnostic tool**.

GETtheMANUALS.org

DF040 **CONTINUED 2**	

CO.0	***NOTES***	**Conditions for applying the fault finding procedure to stored faults:** The fault is declared as present if: – the computer detects a fault on the injector 1 control line. – engine speed greater than **500 rpm**. – battery voltage is greater than **11 V**.

Manipulate the wiring harness between the diesel computer and injector 1 to detect a change in status (present ↔ stored).
Look for any harness damage, and check the **condition and connection points** of injector 1 and its connections.
Repair if necessary.

Check for **insulation from earth, continuity and the absence of interference resistance** on the following connections:

Injector computer, **black connector, track B 7** ⟶ **track 3** of injector 1

Injector computer, **grey connector, track A 3** ⟶ Diesel computer **track A 46**

Repair if necessary.

Check the **insulation** of **tracks 3** and **4** of the injector connector.
Replace the injector if the insulation is not in order.

Clear the fault memory and start the engine.
If the fault is still present**, contact the Techline**.

AFTER REPAIR	Deal with any faults detected by the diagnostic tool. Clear the computer memory. Carry out a road test followed by another check with the **diagnostic tool**.

GETtheMANUALS.org

DF040 **CONTINUED 3**	

CC.1	***NOTES***	**Conditions for applying the fault finding procedure to stored faults:** The fault is declared as present if: – the computer detects a fault on the injector 1 control line. – engine speed greater than **500 rpm**. – battery voltage is greater than **11 V**.

Manipulate the wiring harness between the diesel computer and injector 1 to detect a change in status (present ↔ stored).
Look for any harness damage, and check the **condition and connection points** of injector 1 and its connections.
Repair if necessary.

Check the following connections for **insulation against + 12 V, continuity and absence of interference resistance**:

Injector computer, **black connector, track B 1** → **track 4** of injector 1

Injector computer, **black connector, track B 8** → **Earth**

Repair if necessary.
If the lines are insulated, replace the injector control computer (see **MR 353, MR 402 or MR 361 Mechanical, 13B, Diesel Injection, Power computer**).

Clear the fault memory and start the engine.
If the fault is still present**, contact the Techline**.

AFTER REPAIR	Deal with any faults detected by the diagnostic tool. Clear the computer memory. Carry out a road test followed by another check with the **diagnostic tool**.

GETtheMANUALS.org

DF041 PRESENT OR STORED	CYLINDER 2 INJECTOR CIRCUIT CC : Short circuit CO : Open circuit CO.0 : Open circuit or short circuit to earth CC.1 : Short circuit to + 12 V

NOTES	**Special notes:** Use bornier **Elé. 1681** for all operations on the engine management computer connectors.

CC	***NOTES***	**Conditions for applying the fault finding procedure to stored faults:** The fault is declared as present if: – the line voltage is less than **0.2 V**. – ignition on, – the engine is stopped.

Manipulate the wiring harness between the diesel computer and injector 2 to detect a change in status (present ↔ stored).
Look for any harness damage, and check **the condition and connection** of injector 2 and its connections.
Repair if necessary.

Check the **continuity, insulation from + 12 V and the absence of interference resistance** for the following connection:

Diesel computer **track B 95** ⟶ **track 2** of injector 2

Repair if necessary.

Check the **resistance** of the coil from injector 2 between **tracks 1** and **2** of the injector connector.
Replace the injector if there is a **short circuit (R = 0 Ω)** or an **open circuit (resistance = infinity)**.

Clear the fault memory and start the engine.
If the fault is still present**, contact the Techline**.

AFTER REPAIR	Deal with any faults detected by the diagnostic tool. Clear the computer memory. Carry out a road test followed by another check with the **diagnostic tool**.

GETtheMANUALS.org

DF041 **CONTINUED 1**	

CO	***NOTES***	**Conditions for applying the fault finding procedure to stored faults:** The fault is declared as present if: – the line voltage is greater than **4.8 V**. – ignition on, – the engine is stopped.

Manipulate the wiring harness between the diesel computer and injector 2 to detect a change in status (present ↔ stored).
Look for any harness damage, and check **the condition and connection** of injector 2 and its connections.
Repair if necessary.

Check for **insulation against earth, continuity and the absence of interference resistance** on the following connection:

Diesel computer **track B 82** ⟶ **track 1** of injector 2

Repair if necessary.

Check the **resistance** of the coil from injector 2 between **tracks 1** and **2** of the injector connector.
Replace the injector if there is a **short circuit (R = 0 Ω)** or an **open circuit (resistance = infinity)**.

Clear the fault memory and start the engine.
If the fault is still present**, contact the Techline**.

AFTER REPAIR	Deal with any faults detected by the diagnostic tool. Clear the computer memory. Carry out a road test followed by another check with the **diagnostic tool**.

GETtheMANUALS.org

DF041 **CONTINUED 2**	

CO.0	***NOTES***	**Conditions for applying the fault finding procedure to stored faults:** The fault is declared present: – if the injection computer detects an injector 2 control line fault. – engine speed greater than **500 rpm**. – battery voltage is greater than **11 V**.

Manipulate the wiring harness between the diesel computer and injector 2 to detect a change in status (present ↔ stored).
Look for any harness damage, and check **the condition and connection** of injector 2 and its connections.
Repair if necessary.

Check for **insulation from earth, continuity and the absence of interference resistance** on the following connections:

Injector computer, **black connector, track B 6** → **track 3** of injector 2

Injector computer, **grey connector, track A 4** → Diesel computer **track A 65**

Repair if necessary.

Check the **insulation** of **tracks 3** and **4** of the injector connector.
Replace the injector if the insulation is not in order.

Clear the fault memory and start the engine.
If the fault is still present**, contact the Techline**.

AFTER REPAIR	Deal with any faults detected by the diagnostic tool. Clear the computer memory. Carry out a road test followed by another check with the **diagnostic tool**.

GETtheMANUALS.org

DF041 **CONTINUED 3**	

CC.1	***NOTES***	**Conditions for applying the fault finding procedure to stored faults:** The fault is declared present: – the computer detects a fault on the injector 2 control line, – engine speed greater than **500 rpm**. – battery voltage is greater than **11 V**.

Manipulate the wiring harness between the diesel computer and injector 2 to detect a change in status (present ↔ stored).
Look for any harness damage, and check **the condition and connection** of injector 2 and its connections.
Repair if necessary.

Check the following connections for **insulation against + 12 V, continuity and absence of interference resistance**:

Injector computer, **black connector, track B 1** → **track 4** of injector 2

Injector computer, **black connector, track B 8** → **Earth**

Repair if necessary.
If the lines are insulated, replace the injector control computer (see **MR 353, MR 402 or MR 361 Mechanical, 13B, Diesel Injection, Power computer**).

Clear the fault memory and start the engine.
If the fault is still present**, contact the Techline**.

AFTER REPAIR	Deal with any faults detected by the diagnostic tool. Clear the computer memory. Carry out a road test followed by another check with the **diagnostic tool**.

GETtheMANUALS.org

DF042 PRESENT OR STORED	CYLINDER 3 INJECTOR CIRCUIT CC : Short circuit CO : Open circuit CO.0 : Open circuit or short circuit to earth CC.1 : Short circuit to + 12 V

NOTES	**Special notes:** Use bornier **Elé. 1681** for all operations on the engine management computer connectors.

CC	***NOTES***	**Conditions for applying the fault finding procedure to stored faults:** The fault is declared as present if: – the line voltage is less than **0.2 V**. – ignition on, – the engine is stopped.

Manipulate the wiring harness between the diesel computer and injector 3 to detect a change in status (present ↔ stored).
Look for any harness damage, and check **the condition and connection** of injector 3 and its connections.
Repair if necessary.

Check the **continuity, insulation from + 12 V and the absence of interference resistance** for the following connection:

Diesel computer **track B 95** ⟶ **track 2** of injector 3

Repair if necessary.

Check the **resistance** of the coil from injector 3 between **tracks 1** and **2** of the injector connector.
Replace the injector if there is a **short circuit (R = 0 Ω)** or an **open circuit (resistance = infinity)**.

Clear the fault memory and start the engine.
If the fault is still present**, contact the Techline**.

AFTER REPAIR	Deal with any faults detected by the diagnostic tool. Clear the computer memory. Carry out a road test followed by another check with the **diagnostic tool**.

GETtheMANUALS.org

DF042 **CONTINUED 1**	

CO	***NOTES***	**Conditions for applying the fault finding procedure to stored faults:** The fault is declared as present if: – the line voltage is greater than **4.8 V**. – ignition on, – the engine is stopped.

Manipulate the wiring harness between the diesel computer and injector 3 to detect a change in status (present ↔ stored).
Look for any harness damage, and check **the condition and connection** of injector 3 and its connections.
Repair if necessary.

Check for **insulation against earth, continuity and the absence of interference resistance** on the following connection:

Diesel computer **track B 91** ⟶ **track 1** of injector 3

Repair if necessary.

Check the **resistance** of the coil from injector 3 between **tracks 1** and **2** of the injector connector.
Replace the injector if there is a **short circuit (R = 0 Ω)** or an **open circuit (resistance = infinity)**.

Clear the fault memory and start the engine.
If the fault is still present**, contact the Techline**.

AFTER REPAIR	Deal with any faults detected by the diagnostic tool. Clear the computer memory. Carry out a road test followed by another check with the **diagnostic tool**.

GETtheMANUALS.org

DF042 **CONTINUED 2**	

CO.0	***NOTES***	**Conditions for applying the fault finding procedure to stored faults:** The fault is declared as present if: – The injection computer detects an injector 3 control line fault. – engine speed greater than **500 rpm**. – battery voltage is greater than **11 V**.

Manipulate the wiring harness between the diesel computer and injector 3 to detect a change in status (present ↔ stored).
Look for any harness damage, and check **the condition and connection** of injector 3 and its connections.
Repair if necessary.

Check for **insulation against earth, continuity and the absence of interference resistance** on the following connection:

Injector computer, **black connector, track B 5** → **track 3** of injector 3

Injector computer, **grey connector, track A 5** → Diesel computer **track A 45**

Repair if necessary.

Check the **insulation** of **tracks 3** and **4** of the injector connector.
Replace the injector if the insulation is not in order.

Clear the fault memory and start the engine.
If the fault is still present**, contact the Techline**.

AFTER REPAIR	Deal with any faults detected by the diagnostic tool. Clear the computer memory. Carry out a road test followed by another check with the **diagnostic tool**.

GETtheMANUALS.org

DF042 **CONTINUED 3**	

CC.1	***NOTES***	**Conditions for applying the fault finding procedure to stored faults:** The fault is declared as present if: – the computer detects a fault on the injector 3 control line, – engine speed greater than **500 rpm**. – battery voltage is greater than **11 V**.

Manipulate the wiring harness between the diesel computer and injector 3 to detect a change in status (present ↔ stored).
Look for any harness damage, and check **the condition and connection** of injector 3 and its connections.
Repair if necessary.

Check the following connections for **insulation against + 12 V, continuity and absence of interference resistance**:

Injector computer, **black connector, track B 1** → **track 4** of injector 3

Injector computer, **black connector, track B 8** → **Earth**

Repair if necessary.
If the lines are insulated, replace the injector control computer (see **MR 353, MR 402 or MR 361 Mechanical, 13B, Diesel Injection, Power computer**).

Clear the fault memory and start the engine.
If the fault is still present**, contact the Techline**.

AFTER REPAIR	Deal with any faults detected by the diagnostic tool. Clear the computer memory. Carry out a road test followed by another check with the **diagnostic tool**.

GETtheMANUALS.org

DF043 PRESENT OR STORED	CYLINDER 4 INJECTOR CIRCUIT CC : Short circuit CO : Open circuit CO.0 : Open circuit or short circuit to earth CC.1 : Short circuit to + 12 V

NOTES	**Special notes:** Use bornier **Elé. 1681** for all operations on the engine management computer connectors.

CC	***NOTES***	**Conditions for applying the fault finding procedure to stored faults:** The fault is declared as present if: – the line voltage is less than **0.2 V**. – ignition on, – the engine is stopped.

Manipulate the wiring harness between the diesel computer and injector 4 to detect a change in status (present ↔ stored).
Look for any harness damage, and check **the condition and connection** of injector 4 and its connections.
Repair if necessary.

Check the **continuity, insulation from + 12 V and the absence of interference resistance** for the following connection:

Diesel computer **track B 95** ⟶ **track 2** of injector 4

Repair if necessary.

Check the **resistance** of the coil from injector 4 between **tracks 1** and **2** of the injector connector.
Replace the injector if there is a **short circuit (R = 0 Ω)** or an **open circuit (resistance = infinity)**.

Clear the fault memory and start the engine.
If the fault is still present**, contact the Techline**.

AFTER REPAIR	Deal with any faults detected by the diagnostic tool. Clear the computer memory. Carry out a road test followed by another check with the **diagnostic tool**.

GETtheMANUALS.org

DF043 **CONTINUED 1**	

CO	***NOTES***	**Conditions for applying the fault finding procedure to stored faults:** The fault is declared as present if: – the line voltage is greater than **4.8 V**. – ignition on, – the engine is stopped.

Manipulate the wiring harness between the diesel computer and injector 4 to detect a change in status (present ↔ stored).
Look for any harness damage, and check **the condition and connection** of injector 4 and its connections.
Repair if necessary.

Check for **insulation against earth, continuity and the absence of interference resistance** on the following connection:

Diesel computer **track B 83** ⟶ **track 1** of injector 4

Repair if necessary.

Check the **resistance** of the coil from injector 4 between **tracks 1** and **2** of the injector connector.
Replace the injector if there is a **short circuit (R = 0 Ω)** or an **open circuit (resistance = infinity)**.

Clear the fault memory and start the engine.
If the fault is still present**, contact the Techline**.

AFTER REPAIR	Deal with any faults detected by the diagnostic tool. Clear the computer memory. Carry out a road test followed by another check with the **diagnostic tool**.

GETtheMANUALS.org

DF043 **CONTINUED 2**	

CO.0	***NOTES***	**Conditions for applying the fault finding procedure to stored faults:** The fault is declared as present if: – the injection computer detects an injector 4 control line fault. – engine speed greater than **500 rpm**. – battery voltage is greater than **11 V**.

Manipulate the wiring harness between the diesel computer and injector 4 to detect a change in status (present ↔ stored).
Look for any harness damage, and check **the condition and connection** of injector 4 and its connections.
Repair if necessary.

Check for **insulation from earth, continuity and the absence of interference resistance** on the following connections:

Injector computer, **black connector, track B 4** → **track 3** of injector 4

Injector computer, **grey connector, track A 6** → Diesel computer **track A 64**

Repair if necessary.

Check the **insulation** of **tracks 3** and **4** of the injector connector.
Replace the injector if the insulation is not in order.

Clear the fault memory and start the engine.
If the fault is still present**, contact the Techline**.

AFTER REPAIR	Deal with any faults detected by the diagnostic tool. Clear the computer memory. Carry out a road test followed by another check with the **diagnostic tool**.

GETtheMANUALS.org

DF043 **CONTINUED 3**	

CC.1	***NOTES***	**Conditions for applying the fault finding procedure to stored faults:** The fault is declared present: – the computer detects a fault on the injector 4 control line, – engine speed greater than **500 rpm**. – battery voltage is greater than **11 V**.

Manipulate the wiring harness between the diesel computer and injector 4 to detect a change in status (present ↔ stored).
Look for any harness damage, and check **the condition and connection** of injector 4 and its connections.
Repair if necessary.

Check the following connections for **insulation against + 12 V, continuity and absence of interference resistance**:

Injector computer, **black connector, track B 1** → **track 4** of injector 4

Injector computer, **black connector, track B 8** → **Earth**

Repair if necessary.
If the lines are insulated, replace the injector control computer (see **MR 353, MR 402 or MR 361 Mechanical, 13B, Diesel Injection, Power computer**).

Clear the fault memory and start the engine.
If the fault is still present**, contact the Techline**.

AFTER REPAIR	Deal with any faults detected by the diagnostic tool. Clear the computer memory. Carry out a road test followed by another check with the **diagnostic tool**.

GETtheMANUALS.org

DF044 PRESENT OR STORED	CYLINDER 5 INJECTOR CIRCUIT CC : Short circuit CO : Open circuit CO.0 : Open circuit or short circuit to earth CC.1 : Short circuit to + 12 V

NOTES	**Special notes:** Use bornier **Elé. 1681** for all operations on the engine management computer connectors.

CC	***NOTES***	**Conditions for applying the fault finding procedure to stored faults:** The fault is declared as present if: – the line voltage is less than **0.2 V**. – ignition on, – the engine is stopped.

Manipulate the wiring harness between the diesel computer and injector 5 to detect a change in status (present ↔ stored).
Look for any harness damage, and check the **condition and connection points** of injector 5 and its connections.
Repair if necessary.

Check the **continuity, insulation from + 12 V and the absence of interference resistance** for the following connection:

Diesel computer **track B 95** ⟶ **track 2** of injector 5

Repair if necessary.

Check the **resistance** of the coil from injector 5 between **tracks 1** and **2** of the injector connector.
Replace the injector if there is a **short circuit (R = 0 Ω)** or an **open circuit (resistance = infinity)**.

Clear the fault memory and start the engine.
If the fault is still present**, contact the Techline**.

AFTER REPAIR	Deal with any faults detected by the diagnostic tool. Clear the computer memory. Carry out a road test followed by another check with the **diagnostic tool**.

GETtheMANUALS.org

DF044 **CONTINUED 1**	

CO	***NOTES***	**Conditions for applying the fault finding procedure to stored faults:** The fault is declared as present if: – the line voltage is greater than **4.8 V**. – ignition on, – the engine is stopped.

Manipulate the wiring harness between the diesel computer and injector 5 to detect a change in status (present ↔ stored).
Look for any harness damage, and check the **condition and connection points** of injector 5 and its connections.
Repair if necessary.

Check for **insulation against earth, continuity and the absence of interference resistance** on the following connection:

Diesel computer **track B 92** ⟶ **track 1** of injector 5

Repair if necessary.

Check the **resistance** of the coil from injector 5 between **tracks 1** and **2** of the injector connector.
Replace the injector if there is a **short circuit (R = 0 Ω)** or an **open circuit (resistance = infinity)**.

Clear the fault memory and start the engine.
If the fault is still present**, contact the Techline**.

AFTER REPAIR	Deal with any faults detected by the diagnostic tool. Clear the computer memory. Carry out a road test followed by another check with the **diagnostic tool**.

GETtheMANUALS.org

DF044 **CONTINUED 2**	

CO.0	***NOTES***	**Conditions for applying the fault finding procedure to stored faults:** The fault is declared as present if: – the injection computer detects an injector 5 control line fault. – engine speed greater than **500 rpm**. – battery voltage is greater than **11 V**.

Manipulate the wiring harness between the diesel computer and injector 5 to detect a change in status (present ↔ stored).
Look for any harness damage, and check the condition and connection of injector 5 and its connections.
Repair if necessary.

Check for **insulation from earth, continuity and the absence of interference resistance** on the following connections:

Injector computer, **black connector, track B 3** → **track 3** of injector 5

Injector computer, **grey connector, track A 7** → Diesel computer **track A 44**

Repair if necessary.

Check the **insulation** of **tracks 3** and **4** of the injector 5 connector.
Replace the injector if the insulation is not in order.

Clear the fault memory and start the engine.
If the fault is still present**, contact the Techline**.

AFTER REPAIR	Deal with any faults detected by the diagnostic tool. Clear the computer memory. Carry out a road test followed by another check with the **diagnostic tool**.

GETtheMANUALS.org

DF044 **CONTINUED 3**	

CC.1	***NOTES***	**Conditions for applying the fault finding procedure to stored faults:** The fault is declared as present if: – the computer detects a fault on the injector 5 control line, – engine speed greater than **500 rpm**. – battery voltage is greater than **11 V**.

Manipulate the wiring harness between the diesel computer and injector 5 to detect a change in status (present ↔ stored).
Look for any harness damage, and check the condition and connection of injector 5 and its connections.
Repair if necessary.

Check the following connections for **insulation against + 12 V, continuity and absence of interference resistance**:

Injector computer, **black connector, track B 1** ⟶ **track 4** of injector 5

Injector computer, **black connector, track B 8** ⟶ **Earth**

Repair if necessary.
If the lines are insulated, replace the injector control computer (see **MR 353, MR 402 or MR 361 Mechanical, 13B, Diesel Injection, Power computer**).

Clear the fault memory and start the engine.
If the fault is still present**, contact the Techline**.

AFTER REPAIR	Deal with any faults detected by the diagnostic tool. Clear the computer memory. Carry out a road test followed by another check with the **diagnostic tool**.

GETtheMANUALS.org

DF045 PRESENT OR STORED	CYLINDER 6 INJECTOR CIRCUIT CC : Short circuit CO : Open circuit CO.0 : Open circuit or short circuit to earth CC.1 : Short circuit to + 12 V

NOTES	**Special notes:** Use bornier **Elé. 1681** for all operations on the engine management computer connectors.

CC	***NOTES***	**Conditions for applying the fault finding procedure to stored faults:** The fault is declared as present if: – the line voltage is less than **0.2 V**. – ignition on, – the engine is stopped.

Manipulate the wiring harness between the diesel computer and injector 6 to detect a change in status (present ↔ stored).
Look for any harness damage, and check **the condition and connection** of injector 6 and its connections.
Repair if necessary.

Check the **continuity, insulation from + 12 V and the absence of interference resistance** for the following connection:

Diesel computer **track B 95** ⟶ **track 2** of injector 6

Repair if necessary.

Check the **resistance** of the coil from injector 5 between **tracks 1** and **2** of the injector connector.
Replace the injector if there is a **short circuit (R = 0 Ω)** or an **open circuit (resistance = infinity)**.

Clear the fault memory and start the engine.
If the fault is still present**, contact the Techline**.

AFTER REPAIR	Deal with any faults detected by the diagnostic tool. Clear the computer memory. Carry out a road test followed by another check with the **diagnostic tool**.

GETtheMANUALS.org

DF045 **CONTINUED 1**	

CO	***NOTES***	**Conditions for applying the fault finding procedure to stored faults:** The fault is declared as present if: – the line voltage is greater than **4.8 V**. – ignition on, – the engine is stopped.

Manipulate the wiring harness between the diesel computer and injector 6 to detect a change in status (present ↔ stored).
Look for any harness damage, and check **the condition and connection** of injector 6 and its connections.
Repair if necessary.

Check for **insulation against earth, continuity and the absence of interference resistance** on the following connection:

Diesel computer **track B 84** ⟶ **track 1** of injector 6

Repair if necessary.

Check the **resistance** of the coil from injector 6 between **tracks 1** and **2** of the injector connector.
Replace the injector if there is a **short circuit (R = 0 Ω)** or an **open circuit (resistance = infinity)**.

Clear the fault memory and start the engine.
If the fault is still present**, contact the Techline**.

AFTER REPAIR	Deal with any faults detected by the diagnostic tool. Clear the computer memory. Carry out a road test followed by another check with the **diagnostic tool**.

GETtheMANUALS.org

DF045 **CONTINUED 2**	

CO.0	***NOTES***	**Conditions for applying the fault finding procedure to stored faults:** The fault is declared as present if: – the injection computer detects an injector 6 control line fault. – engine speed greater than **500 rpm**. – battery voltage is greater than **11 V**.

Manipulate the wiring harness between the diesel computer and injector 6 to detect a change in status (present ↔ stored).
Look for any harness damage, and check **the condition and connection** of injector 6 and its connections.
Repair if necessary.

Check for **insulation from earth, continuity and the absence of interference resistance** on the following connections:

Injector computer, **black connector, track B 2** → **track 3** of injector 6

Injector computer, **grey connector, track A 8** → Diesel computer **track A 63**

Repair if necessary.

Check the **insulation** of **tracks 3** and **4** of the injector 6 connector.
Replace the injector if the insulation is not in order.

Clear the fault memory and start the engine.
If the fault is still present**, contact the Techline**.

AFTER REPAIR	Deal with any faults detected by the diagnostic tool. Clear the computer memory. Carry out a road test followed by another check with the **diagnostic tool**.

GETtheMANUALS.org

DF045 **CONTINUED 3**	

CC.1	***NOTES***	**Conditions for applying the fault finding procedure to stored faults:** The fault is declared as present if: – the computer detects a fault on the injector 6 control line, – engine speed greater than **500 rpm**. – battery voltage is greater than **11 V**.

Manipulate the wiring harness between the diesel computer and injector 6 to detect a change in status (present ↔ stored).
Look for any harness damage, and check the condition and connection of injector 6 and its connections.
Repair if necessary.

Check the following connections for **insulation against + 12 V, continuity and absence of interference resistance**:

Injector computer, **black connector, track B 1** ⟶ **track 4** of injector 6

Injector computer, **black connector, track B 8** ⟶ **Earth**

Repair if necessary.
If the lines are insulated, replace the injector control computer (see **MR 353, MR 402 or MR 361 Mechanical, 13B, Diesel Injection, Power computer**).

Clear the fault memory and start the engine.
If the fault is still present**, contact the Techline**.

AFTER REPAIR	Deal with any faults detected by the diagnostic tool. Clear the computer memory. Carry out a road test followed by another check with the **diagnostic tool**.

GETtheMANUALS.org

DF055 PRESENT OR STORED	TURBOCHARGING PRESSURE REGULATION CIRCUIT CO : Open circuit CC : Short circuit CO.0 : Open circuit or short circuit to earth CC.1 : Short circuit to + 12 V 1.DEF: Turbocharging pressure too low 2.DEF: Turbocharging pressure too high 3.DEF: Turbocharging pressure loop error

NOTES	**Special notes:** Use bornier **Elé. 1681** for all operations on the engine management computer connectors. If fault **DF089 Inlet manifold pressure sensor circuit** appears, deal with it first.

CO	***NOTES***	**Conditions for applying the fault finding procedure to stored faults:** The fault is declared present if the voltage on the diagnostic line is less than **0.15 V**.

Manipulate the wiring harness between the diesel computer and the turbocharger position sensor to detect a change in status (present ↔ stored).
Look for possible damage to the harness, and check **the condition and connection** of the turbocharger position sensor and its connections.
Repair if necessary.

Check for **insulation against earth, continuity and the absence of interference resistance** on the following connection:

Diesel computer **track B 101** → **track 1** of the turbocharger position sensor

Diesel computer **track B 98** → **track 3** of the turbocharger position sensor

Repair if necessary.

Measure the **resistance between tracks 2 and 3** of the **turbo position sensor**.
Replace the sensor if the **resistance** is not between **4 kΩ** and **6 kΩ**.

If the fault is still present**, contact the Techline**.

AFTER REPAIR	Deal with any faults detected by the diagnostic tool. Clear the computer memory. Carry out a road test followed by another check with the **diagnostic tool**.

GETtheMANUALS.org

DF055 **CONTINUED 1**	

CC	***NOTES***	**Conditions for applying the fault finding procedure to stored faults:** The fault is declared present if the voltage on the diagnostic line is greater than **4.95 V**.

Manipulate the wiring harness between the diesel computer and the turbocharger position sensor to detect a change in status (present ⇔ stored).
Look for possible damage to the harness, and check **the condition and connection** of the turbocharger position sensor and its connections.
Repair if necessary.

Check the **insulation from + 5 V and + 12 V, continuity and absence of interference resistance** on the following connection:

Diesel computer **track B 87** → **track 2** of the turbocharger position sensor

Diesel computer **track B 101** → **track 1** of the turbocharger position sensor

Repair if necessary.

Measure the **resistance between tracks 2 and 3** of the **turbo position sensor**.
Replace the sensor if the **resistance** is not between **4 kΩ** and **6 kΩ**.

If the fault is still present**, contact the Techline**.

AFTER REPAIR	Deal with any faults detected by the diagnostic tool. Clear the computer memory. Carry out a road test followed by another check with the **diagnostic tool**.

GETtheMANUALS.org

DF055 **CONTINUED 2**	

CO.0	***NOTES***	**Conditions for applying the fault finding procedure to stored faults:** The fault is declared as present if: – the voltage on the diagnostic line is too low, – the computer detects no voltage on **track B 97**.

Manipulate the wiring harness between the diesel computer and the turbocharging pressure solenoid valve in order to detect a status change (present ↔ stored)
Look for possible damage to the harness, and check **the condition and connection** of the turbocharging pressure solenoid valve and its connections.
Repair if necessary.

Check for **insulation against earth, continuity and the absence of interference resistance** on the following connection:

Diesel computer **track B 97** ⟶ **track 1** of the turbocharging pressure solenoid valve

Repair if necessary.

Measure the **resistance** between **tracks 1** and **2** of the turbocharging pressure solenoid valve.
Replace the solenoid valve if its **resistance** is not between **11 Ω** and **13 Ω at 20 °C**.

Check for **insulation, continuity and the absence of interference resistance** of the following connection:

Main relay **track 13** ⟶ **track 2** of the turbocharging pressure solenoid valve

Diesel computer **tracks A 1** and **A 2** ⟶ **track 2** of the turbocharging pressure solenoid valve

If the fault is still present, check the **intermediate connector R115** on **track 2**.
Repair if necessary.

If the fault is still present**, contact the Techline**.

AFTER REPAIR	Deal with any faults detected by the diagnostic tool. Clear the computer memory. Carry out a road test followed by another check with the **diagnostic tool**.

GETtheMANUALS.org

DF055 **CONTINUED 3**	

CC.1	***NOTES***	**Conditions for applying the fault finding procedure to stored faults:** The fault is declared as present if: – the voltage on the diagnostic line is too high, – the computer detects an excessive current on **track B 97**.

Manipulate the wiring harness between the diesel computer and the turbocharging pressure solenoid valve in order to detect a status change (present ↔ stored)
Look for possible damage to the harness, and check **the condition and connection** of the turbocharging pressure solenoid valve and its connections.
Repair if necessary.

Check the **continuity, insulation from + 12 V and the absence of interference resistance** for the following connection:

Diesel computer **track B 97** ⟶ **track 1** of the turbocharging pressure solenoid valve

Repair if necessary.

If the fault is still present**, contact the Techline**.

AFTER REPAIR	Deal with any faults detected by the diagnostic tool. Clear the computer memory. Carry out a road test followed by another check with the **diagnostic tool**.

GETtheMANUALS.org

DF055 **CONTINUED 4**	

1.DEF ***2.DEF***	***NOTES***	**Conditions for applying the fault finding procedure to stored faults:** The fault is declared as present if: – the engine speed is greater than **650 rpm**, – loop difference on the injection flow less than **30 mm^3/st**.
3.DEF		**Conditions for applying the fault finding procedure to stored faults:** The fault is declared as present if: – the engine speed is greater than **650 rpm**, – coolant temperature is between **50** and **100 °C**.

Manipulate the wiring harness between the diesel computer and the turbocharging pressure solenoid valve in order to detect a status change (present ↔ stored)
Look for possible damage to the harness, and check **the condition and connection** of the turbocharging pressure solenoid valve and its connections.
Repair if necessary.

Check for **insulation from earth, continuity and absence of interference resistance** on the following connections:

Diesel computer **track B 97** → **track 1** of the turbocharging pressure solenoid valve

Main relay **track 13** → **track 2** of the turbocharging pressure solenoid valve

Diesel computer **tracks A 1** and **A 2** → **track 2** of the turbocharging pressure solenoid valve

Ensure the presence of **+ 12 V** on **track A 1**

If the fault is still present, check the **intermediate connector R115** on **track 2**.
Repair if necessary.

AFTER REPAIR	Deal with any faults detected by the diagnostic tool. Clear the computer memory. Carry out a road test followed by another check with the **diagnostic tool**.

GETtheMANUALS.org

DF055 **CONTINUED 5**	

Check for **insulation against earth, continuity and the absence of interference resistance** on the following connection:

Diesel computer **track B 101** ⟶ **track 1** of the turbocharger position sensor

Repair if necessary.

Check the **continuity** of the connection between

Diesel computer **track B 98** ⟶ **track 3** of the turbocharger position sensor

Repair if necessary.

Check the **continuity, insulation from + 12 V and the absence of interference resistance** for the following connection:

Diesel computer **track B 87** ⟶ **track 2** of the turbocharger position sensor

Repair if necessary.

If the fault is still present, apply **test 4 "Checking the turbocharging and air inlet circuit"**.
Repair if necessary.
Check that the turbocharger control is not mechanically seized, by applying **test 7 "Variable geometry turbocharger control"**.
Repair if necessary.

Check that the turbocharging pressure solenoid valve flexible hoses are not blocked and do not leak.
Repair if necessary.

Check that the vacuum pump works correctly.
Check the air reservoir sealing ring (vacuum reservoir).

Clear the fault memory and start the engine.
If the fault is still present**, contact the Techline**.

AFTER REPAIR	Deal with any faults detected by the diagnostic tool. Clear the computer memory. Carry out a road test followed by another check with the **diagnostic tool**.

GETtheMANUALS.org

DF056 PRESENT OR STORED	AIR FLOWMETER CIRCUIT CO.0 : Open circuit or short circuit to earth CC.1 : Short circuit to + 12 V DEF : Inconsistent data

NOTES	**Special notes:** Use bornier **Elé. 1681** for all operations on the engine management computer connectors.

CO.0	***NOTES***	**Priority when dealing with a number of faults:** Deal with **DF217 (DEF) Sensor supply voltage no. 2** first if it is present or stored.
		Conditions for applying the fault finding procedure to stored faults: The fault is declared as present if: – the air flow sensor voltage is less than **0.2 V**. – + after ignition feed present.

Manipulate the wiring harness between the diesel computer and the air flow sensor to detect a change in status (present '↔ stored). Look for possible damage to the harness, and check **the condition and connection** of the air flow sensor and its connections. Repair if necessary.
Check the condition of the **F6 (15A) fuse**. Replace the fuse if necessary.
Check for **insulation against earth, continuity and the absence of interference resistance** on the following connection: Air flow sensor **track 5** ⟶ Diesel computer **track A 30** Repair if necessary.
Clear the faults from memory and then start the engine. Check that the fault has disappeared. If the fault reappears, replace the air flow sensor.
Clear the stored faults. Restart the vehicle and wait **30 seconds**.
If the fault is still present**, contact the Techline**. **Perform a new computer fault finding procedure; if the fault reappears contact the Techline.**

AFTER REPAIR	Deal with any faults detected by the diagnostic tool. Clear the computer memory. Carry out a road test followed by another check with the **diagnostic tool**.

GETtheMANUALS.org

DF056 **CONTINUED 1**	

CC.1	***NOTES***	**Priority when dealing with a number of faults:** Deal with **DF217 (DEF) Sensor supply voltage no. 2** first if it is present or stored.
		Conditions for applying the fault finding procedure to stored faults: The fault is declared as present if: – the air flow sensor voltage is greater than **4.9 V**. – + after ignition feed present.

Manipulate the wiring harness between the diesel computer and the air flow sensor to detect a change in status (present '↔ stored).
Look for possible damage to the harness, and check **the condition and connection** of the air flow sensor and its connections.
Repair if necessary.

Check the **continuity, insulation from + 12 V and the absence of interference resistance** for the following connection:

Air flow sensor **track 5** ⟶ Diesel computer **track A 30**

Repair if necessary.

Check for **insulation against earth, continuity and the absence of interference resistance** on the following connection:

Air flow sensor **track 4** ⟶ Diesel computer **track A 26**

Repair if necessary.

Check **insulation from + 5 V, continuity and absence of interference resistance** on the following connection:

Air flow sensor **track 3** ⟶ Diesel computer **track A 11**

Repair if necessary.

Clear the faults from memory and then start the engine.
Check that the fault has disappeared.
If the fault reappears, replace the air flow sensor.

Clear the stored faults.
Restart the vehicle and wait **30 seconds**.

If the fault is still present, deal with any other faults.
Perform a new computer fault finding procedure; if the fault reappears contact the Techline.

AFTER REPAIR	Deal with any faults detected by the diagnostic tool. Clear the computer memory. Carry out a road test followed by another check with the **diagnostic tool**.

GETtheMANUALS.org

DF056 **CONTINUED 2**	

DEF	***NOTES***	**Priority when dealing with a number of faults:** Prioritise the other present or stored faults.
		Conditions for applying the fault finding procedure to stored faults: The fault is declared as present if: – engine speed between **650** and **1050 rpm** stabilised. – detection time greater than **5 seconds**.

Manipulate the wiring harness between the diesel computer and the air flow sensor to detect a change in status (present '↔ stored).
Look for possible damage to the harness, and check **the condition and connection** of the air flow sensor and its connections.
Repair if necessary.

Check the entire air inlet circuit:
– air inlet circuit sealing,
– air filter unit inlet not blocked and filter not clogged,
– no foreign bodies on the air flow sensor grille (visual inspection only).

IMPORTANT
Cleaning the grille with compressed air is prohibited.

Check that the air flow sensor is fitted correctly on the engine inlet air line.
If not, replace the air flow sensor.

Check the **insulation, continuity and absence of interference resistance** on the following connections:

Air flow sensor **track 5** → Diesel computer **track A 30**

Air flow sensor **track 4** → Diesel computer **track A 26**

Air flow sensor **track 3** → Diesel computer **track A 11**

Repair if necessary.

Clear the faults from memory and then start the engine.
Wait **30 seconds** then restart computer fault finding; if the fault reappears, check conformity of the engine with the different parameters.

If the fault is still present**, contact the Techline**.

AFTER REPAIR	Deal with any faults detected by the diagnostic tool. Clear the computer memory. Carry out a road test followed by another check with the **diagnostic tool**.

GETtheMANUALS.org

DF058 PRESENT OR STORED	OIL TEMPERATURE SENSOR CIRCUIT CO.0 : Open circuit or short circuit to earth CC.1 : Short circuit to + 12 V

NOTES	**Special notes:** Use bornier **Elé. 1681** for all operations on the engine management computer connectors. **FOR VDIAG OC ONLY.**

CO.0	***NOTES***	**Conditions for applying the fault finding procedure to stored faults:** The fault is declared present if the voltage on the diagnostic line is less than **0.12 V**.

Manipulate the wiring harness between the diesel computer and the oil temperature sensor in order to detect a status change (present ↔ stored).
Look for possible damage to the harness, and check **the connection and the condition** of the oil temperature sensor and its connections.
Repair if necessary.

Check for **insulation against earth, continuity and the absence of interference resistance** on the following connection:

Diesel computer **track A 11** ⟶ **track 1** of the oil temperature sensor

Repair if necessary.

If the fault is still present**, contact the Techline**.

AFTER REPAIR	Deal with any faults detected by the diagnostic tool. Clear the computer memory. Carry out a road test followed by another check with the **diagnostic tool**.

GETtheMANUALS.org

DF058 **CONTINUED**	

CC.1	***NOTES***	**Conditions for applying the fault finding procedure to stored faults:** The fault is declared present if the voltage on the diagnostic line is greater than **4.97 V**.

Manipulate the wiring harness between the diesel computer and the oil temperature sensor in order to detect a status change (present ↔ stored).
Look for possible damage to the harness, and check **the connection and the condition** of the oil temperature sensor and its connections.
Repair if necessary.

Check **insulation from + 5 V and + 12 V, continuity and absence of interference resistance** on the following connection:

Diesel computer **track A 29** ⟶ **track 2** of the oil temperature sensor

Repair if necessary.

If the fault is still present**, contact the Techline**.

AFTER REPAIR	Deal with any faults detected by the diagnostic tool. Clear the computer memory. Carry out a road test followed by another check with the **diagnostic tool**.

GETtheMANUALS.org

DF089 PRESENT OR STORED	INLET MANIFOLD PRESSURE SENSOR CIRCUIT CO.0 : Open circuit or short circuit to earth CC.1 : Short circuit to + 12 V DEF : Inconsistent data

NOTES	**Special notes:** Use bornier **Elé. 1681** for all operations on the engine management computer connectors.

CO.0	***NOTES***	**Conditions for applying the fault finding procedure to stored faults:** The fault is declared as present if: – the manifold pressure sensor voltage is less than **0.29 V**. – + after ignition on, – battery voltage is greater than **11.6 V**.

Manipulate the wiring harness between the diesel computer and the manifold pressure sensor to detect a change in status (present ↔ stored).
Look for possible damage to the harness, and check **the condition and connection** of the manifold pressure sensor and its connections.
Repair if necessary.

Check for **insulation from earth**, **continuity and the absence of interference resistance** on the following connections:

Manifold pressure sensor, **grey connector, track C** → Diesel computer **track B 93**

Manifold pressure sensor, **grey connector, track A** → Diesel computer **track B 98**

Repair if necessary.

Clear the fault memory and start the engine.
If the fault is still present, replace the manifold pressure sensor (see **MR 353, MR 402 or MR 361 Mechanical, 12A, Fuel mixture, Inlet manifold**).

Clear the fault memory and restart the engine.
If the fault is still present, apply **test 4 "Checking the turbocharging and air inlet circuit"**.
Repair if necessary.
If the fault is still present, apply **test 7: Variable geometry turbocharger command**.
Repair if necessary.
If the fault is still present, contact the Techline.

AFTER REPAIR	Deal with any faults detected by the diagnostic tool. Clear the computer memory. Carry out a road test followed by another check with the **diagnostic tool**.

GETtheMANUALS.org

DF089 **CONTINUED 1**	

CC.1	***NOTES***	**Conditions for applying the fault finding procedure to stored faults:** The fault is declared as present if: – the manifold pressure sensor voltage is greater than **4.5 V**. – + after ignition on, – battery voltage is greater than **11.6 V**.

Measure the **feed** voltage of the turbocharger position feedback sensor using the diagnostic tool.
If the voltage is not between **3.4 V** and **4.5 V**, repair or replace the turbocharger feedback sensor if necessary (see **MR 353, MR 402 or MR 361 Mechanical, 12B, Turbocharging)**.

Start the engine and let it run at **idle speed at 90 ˚C**.
Check the **feed** voltage of the turbocharger position feedback sensor using the diagnostic tool. If the voltage is not between **0.45 V** and **0.55 V**, repair or replace the turbocharger feedback sensor if necessary (see **MR 353, MR 402 or MR 361 Mechanical, 12B, Turbocharging**).

Manipulate the wiring harness between the diesel computer and the manifold pressure sensor to detect a change in status (present ↔ stored).
Look for possible damage to the harness, and check **the condition and connection** of the manifold pressure sensor and its connections.
Repair if necessary.

Check the **continuity, insulation from + 12 V and the absence of interference resistance** for the following connection:

Manifold pressure sensor, **grey connector, track B** → Diesel computer **track B 87**

Repair if necessary.

Stop the engine and check for the presence of **+ 5 V** on **track C** of the pressure sensor with **+ after ignition** on.
If necessary replace the sensor.

Start the engine and wait a few minutes at idle speed at 80 ˚C:
Check the **value** of the **position** and **voltage** of the **EGR valve** using the diagnostic tool in the Parameters menu **PR136 EGR valve position** and **PR160 EGR potentiometer voltage**.
If the EGR valve position value is different from **0 ± 0.1mm** and the voltage is different from **4 ± 0.1 V**, replace the EGR valve.

Clear the fault memory and restart the engine.
If the fault is still present**, contact the Techline**.

AFTER REPAIR	Deal with any faults detected by the diagnostic tool. Clear the computer memory. Carry out a road test followed by another check with the **diagnostic tool**.

GETtheMANUALS.org

DF089 **CONTINUED 2**	

DEF	*NOTES*	**Conditions for applying the fault finding procedure to stored faults:** The fault is declared present: – if the manifold vacuum is **700 mbar** less than atmospheric pressure, see parameter **PR035 "Atmospheric pressure"**. – the engine speed is less than **1050 rpm**, – there is an atmospheric pressure signal without faults, – the fuel flow is less than **15 mm^3/stroke**, – with the vehicle stopped.

Manipulate the wiring harness between the diesel computer and the manifold pressure sensor to detect a change in status (present ↔ stored).
Look for possible damage to the harness, and check **the condition and connection** of the manifold pressure sensor and its connections.
Repair if necessary.

Check the **continuity and the absence of interference resistance** on the following connection:

Manifold pressure sensor, **grey connector, track A** → Diesel computer **track B 93**

Repair if necessary.

Check the **continuity and the absence of interference resistance** on the following connection:

Manifold pressure sensor, **grey connector, track C** → Diesel computer **track B 98**

Repair if necessary.

Check the **continuity and the absence of interference resistance** on the following connection:

Manifold pressure sensor, **grey connector, track B** → Diesel computer **track B 87**

Repair if necessary.

AFTER REPAIR	Deal with any faults detected by the diagnostic tool. Clear the computer memory. Carry out a road test followed by another check with the **diagnostic tool**.

GETtheMANUALS.org

DF089 **CONTINUED 3**	

Clear the fault memory and start the engine.
If the fault is still present, check the air supply circuit between the turbocharger and the inlet manifold.
Check the conformity, **with the engine running**, of **PR041 "Turbocharging pressure"** and **PR146 "Inlet air flow"**.
If the fault is still present, replace the manifold pressure sensor (see **MR 353 or MR 361 Mechanical, 12B, Turbocharging**).

Clear the fault memory and restart the engine.
If the fault is still present, contact the Techline.

AFTER REPAIR	Deal with any faults detected by the diagnostic tool. Clear the computer memory. Carry out a road test followed by another check with the **diagnostic tool**.

GETtheMANUALS.org

DF098 PRESENT OR STORED	FUEL TEMPERATURE SENSOR CIRCUIT CC.1 : Short circuit to + 12 V CO.0 : Open circuit or short circuit to earth

NOTES	**Special notes:** Use bornier **Elé. 1681** for all operations on the engine management computer connectors.

CO.0	***NOTES***	**Priority when dealing with a number of faults:** Deal with **DF217 (DEF) Sensor supply voltage no. 2** first if it is present or stored.
		Conditions for applying the fault finding procedure to stored faults: The fault is declared as present if: – fuel temperature sensor voltage is less than **0.12 V**. – + after ignition feed present.

Manipulate the wiring harness between the diesel computer and the fuel temperature sensor in order to detect a status change (present ↔ stored).
Look for possible damage to the harness, and check **the connection and the condition** of the fuel temperature sensor and its connections.
Repair if necessary.

Check the **insulation, continuity and absence of interference resistance** on the following connections:

Fuel temperature sensor **track 1** ⟶ Diesel computer **track B 100**

Fuel temperature sensor **track 2** ⟶ **track B 95** of the diesel computer

Repair if necessary.

Check for **insulation against earth, continuity and the absence of interference resistance** on the following connection:

Fuel temperature sensor **track 2** ⟶ **Earth**

Replace the fuel temperature sensor, if necessary.

Measure the **resistance** of the coolant temperature sensor between **tracks 1** and **2** of its connector.
Replace the sensor if the **resistance** is not:
5728 ± 300 Ω at 10 °C
3515 ± 200 Ω at 20 °C
992 ± 100 Ω at 50 °C

If the fault is still present, deal with any other faults.

If the fault is still present**, contact the Techline**.

AFTER REPAIR	Deal with any faults detected by the diagnostic tool. Clear the computer memory. Carry out a road test followed by another check with the **diagnostic tool**.

GETtheMANUALS.org

DF098 **CONTINUED**	

		Priority when dealing with a number of faults: Deal with **DF217 (DEF) Sensor supply voltage no. 2** first if it is present or stored.
CC.1	***NOTES***	**Conditions for applying the fault finding procedure to stored faults:** The fault is declared as present if: – the fuel temperature sensor voltage is greater than **4.9 V**. – + after ignition feed present.

Manipulate the wiring harness between the diesel computer and the fuel temperature sensor in order to detect a status change (present ↔ stored). Look for possible damage to the harness, and check **the connection and the condition** of the fuel temperature sensor and its connections. Repair if necessary.
Check the **insulation from + 5 V and + 12 V, continuity and absence of interference resistance** on the following connection: Fuel temperature sensor **track 1** ⟶ Diesel computer **track B 100** Repair if necessary.
Check for **insulation against earth, continuity and the absence of interference resistance** on the following connection: Fuel temperature sensor **track 2** ⟶ Earth Replace the fuel temperature sensor, if necessary.
Measure the **resistance** of the fuel temperature sensor between **tracks 1** and **2** of its connector. Replace the sensor if the **resistance** is not: **5728 ± 300 Ω at 10 °C** **3515 ± 200 Ω at 20 °C** **992 ± 100 Ω at 50 °C**
If the fault is still present, deal with any other faults.
If the fault is still present**, contact the Techline**.

AFTER REPAIR	Deal with any faults detected by the diagnostic tool. Clear the computer memory. Carry out a road test followed by another check with the **diagnostic tool**.

GETtheMANUALS.org

DF112 PRESENT OR STORED	CYLINDER REFERENCE SENSOR CIRCUIT 1.DEF: Camshaft sensor in open circuit 2.DEF: Camshaft signal incoherence 3.DEF: Inconsistency with engine speed

NOTES	**Special notes:** Use bornier **Elé. 1681** for all operations on the engine management computer connectors.

1.DEF	***NOTES***	**Conditions for applying the fault finding procedure to stored faults:** The fault is declared as present if: – the computer only receives the signal from the crankshaft position sensor, – the computer receives no signal from the camshaft position sensor, – battery voltage is greater than **8 V**. – engine speed greater than **600 rpm**.

Manipulate the wiring harness between the diesel computer and the cylinder reference sensor to detect a change in status (present ↔ stored).
Look for possible damage to the harness, and check **the connection and the condition** of the cylinder reference sensor and its connections.
Repair if necessary.

Check for **insulation against earth, continuity and the absence of interference resistance** on the following connection:

Diesel computer **track B 102** ⟶ **track 1 of the cylinder reference sensor**

Repair if necessary.

Check for **insulation against earth, continuity and the absence of interference resistance** on the following connection:

Diesel computer **track B 103** ⟶ **track 2 of the cylinder reference sensor**

Repair if necessary.

Check for **insulation against earth, continuity and the absence of interference resistance** on the following connection:

Diesel computer **track B 110** ⟶ **track 1** of the engine speed sensor

Repair if necessary.

AFTER REPAIR	Deal with any faults detected by the diagnostic tool. Clear the computer memory. Carry out a road test followed by another check with the **diagnostic tool**.

GETtheMANUALS.org

DF112 **CONTINUED 1**	

Check for **insulation against earth, continuity and the absence of interference resistance** on the following connection:

Diesel computer **track B 111** ⟶ **track 2** of the engine speed sensor

Repair if necessary.

Check that the **shielding earth connection** of the camshaft position sensor's electric wiring harness is in **good condition**.

Measure the **resistance** of the **cylinder reference sensor** between **tracks 1 and 2**.
Replace the sensor if the **resistance** is not between **1850 Ω** and **2450 Ω**.

Clear the fault memory and start the engine.
If the fault is still present**, contact the Techline**.

AFTER REPAIR	Deal with any faults detected by the diagnostic tool. Clear the computer memory. Carry out a road test followed by another check with the **diagnostic tool**.

GETtheMANUALS.org

DF112 **CONTINUED 2**	

2.DEF	***NOTES***	**Conditions for applying the fault finding procedure to stored faults:** The fault is declared as present if: – the computer receives an incorrect signal from the camshaft position sensor (value other than **7 pulses per revolution** or signal interference), – the engine speed is greater than **670 rpm.**

Manipulate the wiring harness between the diesel computer and the cylinder reference sensor to detect a change in status (present ↔ stored).
Look for possible damage to the harness, and check **the connection and the condition** of the cylinder reference sensor and its connections.
Repair if necessary.

Check that the **shielding earth connection** of the camshaft position sensor's electric wiring harness is in **good condition**.

Check for **insulation against earth, continuity and the absence of interference resistance** on the following connection:

Diesel computer **track B 110** ⟶ **track 1** of the engine speed sensor

Repair if necessary.

Check for **insulation against earth, continuity and the absence of interference resistance** on the following connection:

Diesel computer **track B 111** ⟶ **track 2** of the engine speed sensor

Repair if necessary.

Measure the **resistance** of the **cylinder reference sensor** between **tracks 1 and 2**.
Replace the sensor if the **resistance** is not between **1850 Ω** and **2450 Ω**.

Clear the fault memory and start the engine.
If the fault is still present**, contact the Techline**.

AFTER REPAIR	Deal with any faults detected by the diagnostic tool. Clear the computer memory. Carry out a road test followed by another check with the **diagnostic tool**.

GETtheMANUALS.org

DF112 **CONTINUED 3**	

3.DEF	***NOTES***	**Conditions for applying the fault finding procedure to stored faults:** The fault is declared as present if: – the computer detects a major phase shift between the camshaft and the crankshaft. **During the starting phase:** – the engine speed is greater than **350 rpm.** – the engine coolant temperature is greater than **20 °C**; **Engine running:** – Engine speed greater than **670 rpm**.

Check that the camshaft position sensor connectors and the crankshaft position sensor connectors are in **good condition**.
Repair if necessary.

Check that the **shielding earth connection** of the camshaft position sensor's electric wiring harness is in **good condition**.

Check that the **timing belt** is correctly **tensioned** and **adjusted**.
Check that the **timing belt pulleys** are correctly **adjusted** on the camshafts and the crankshaft.

Check the **condition** and the **position** of the **target on the camshaft**.
Replace the target if it does not have **6 slots** in sound condition.
Check that the camshaft position sensor is in **good condition** and replace it if necessary.

Check the **condition** and the **position** of the **target on the crankshaft**.
Replace the target if it does not have **24 slots** in sound condition.
Check that the crankshaft position sensor is in **good condition** and replace it if necessary.

Check for **insulation against earth, continuity and the absence of interference resistance** on the following connection:

Diesel computer **track B 110** ⟶ **track 1** of the engine speed sensor

Repair if necessary.

Check for **insulation against earth, continuity and the absence of interference resistance** on the following connection:

Diesel computer **track B 111** ⟶ **track 2** of the engine speed sensor

Repair if necessary.

If the fault is still present, replace both sensors (see **MR 353, MR 402 or MR 361 Mechanical, 10A, Engine and peripherals**).
If the fault is still present, **contact Techline**.

AFTER REPAIR	Deal with any faults detected by the diagnostic tool. Clear the computer memory. Carry out a road test followed by another check with the **diagnostic tool**.

GETtheMANUALS.org

DF154 PRESENT OR STORED	FLYWHEEL SIGNAL SENSOR CIRCUIT 1.DEF: Engine speed sensor in open circuit 2.DEF: Engine speed inconsistency

NOTES	**Special notes:** Use bornier **Elé. 1681** for all operations on the engine management computer connectors.

1.DEF	***NOTES***	**Conditions for applying the fault finding procedure to stored faults:** The fault is declared as present if: – the computer only receives the camshaft position sensor signal, – the computer does not receive a flywheel sensor signal, – when the engine is running.

Check that the **battery** voltage is greater than **11.6 V**.
Check the **condition of the vehicle earths** and the charging circuit (see **Technical Note 6014A, Charging circuit check**).
Replace the battery if necessary.

Manipulate the wiring harness between the diesel computer and the flywheel signal sensor to detect a change in status (present ↔ stored).
Look for possible damage to the harness, and check **the connection and the condition** of the flywheel signal sensor and its connections.
Repair if necessary.

Check the **continuity and the absence of interference resistance** on the following connection:

Flywheel signal sensor **track 1** ⟶ Diesel computer **track B 110**

Repair if necessary.

Check the **continuity and the absence of interference resistance** on the following connection:

Flywheel signal sensor **track 2** ⟶ Diesel computer **track B 111**

Repair if necessary.

Check for **insulation against earth, continuity and the absence of interference resistance** on the following connection:

Diesel computer **track B 114** ⟶ **Earth**

Repair if necessary.

AFTER REPAIR	Deal with any faults detected by the diagnostic tool. Clear the computer memory. Carry out a road test followed by another check with the **diagnostic tool**.

GETtheMANUALS.org

DF154 **CONTINUED**	

If the fault is still present, check the **condition** of the flywheel signal sensor electric wiring harness **shielding earth**. Repair if necessary.
Check that the **shielding earth connection** of the camshaft position sensor's electric wiring harness is in **good condition**.
Measure the **resistance** of the flywheel signal sensor between **tracks 1** and **2** of its connector. Replace the sensor if the **resistance** is not between **1850 Ω and 2450 Ω at 20 ˚C**.
If the fault is still present**, contact the Techline**.

AFTER REPAIR	Deal with any faults detected by the diagnostic tool. Clear the computer memory. Carry out a road test followed by another check with the **diagnostic tool**.

GETtheMANUALS.org

DF175 PRESENT OR STORED	SUPPLY 1.DEF: Feed voltage too high. 2.DEF: Feed voltage too low

NOTES	**Special notes:** Use bornier **Elé. 1681** for all operations on the engine management computer connectors.

1.DEF	***NOTES***	**Conditions for applying the fault finding procedure to stored faults:** The fault is declared present when: – the computer is supplied with a voltage greater than **15.8 V**. – the heating elements are disconnected, – when the engine is running.

Check the charging circuit (see **Technical Note 6014A, Charging circuit check**).
Check **the condition** of the **vehicle earths**.

Check that the feed voltage is around **14.4 V** and that it never exceeds **15.8 V**.
Repair if necessary.

Check the **continuity and the absence of interference resistance** on the following connection:

Diesel computer **track A 24** → **track 28** of the fuse box (F6)
→ **track 2** of the alternator

Repair if necessary.

If the fault is still present**, contact the Techline**.

AFTER REPAIR	Deal with any faults detected by the diagnostic tool. Clear the computer memory. Carry out a road test followed by another check with the **diagnostic tool**.

GETtheMANUALS.org

DF175 **CONTINUED 1**	

2.DEF	***NOTES***	**Conditions for applying the fault finding procedure to stored faults:** The fault is declared as present if: – the computer is supplied with a voltage less than **11.6 V**. – the heating elements are disconnected, – when the engine is running. **Special note:** – **level 2 fault warning light** illuminated.

Check the **condition of the battery** and the charging circuit (see **Technical Note 6014A, Charging circuit check**).
Check **the condition** of the **vehicle earths**.

Check that the feed voltage is around **14.4 V** and that it is never less than **11.6 V**.
Repair if necessary.

During the **starting phase**, check that the alternator is **working correctly**.
Replace the alternator if necessary.
If the alternator is not working correctly, check **the condition** of the **F3 fuse (30 A)**.
Repair if necessary.

A) Vehicle without alternator load shedding (refer to the **Wiring Diagrams** Technical Note for the vehicle):
Check for **continuity and the absence of interference resistance** on the following connection:

Alternator relay track 1 → **Track A24** of the injection computer
Alternator relay track 2 →

Repair if necessary.

B) Vehicle with alternator load shedding (refer to the **Wiring Diagrams** Technical Note for the vehicle):
Check for **+ 12 V** on **tracks 52** and **48** of the alternator load shedding relay (opto relay).
If the tracks are not powered, check the **condition** of the **F6 fuse (10 A)**.

Check the **continuity and the absence of interference resistance** on the following connection:

Fuse box (F3) **track 24** → **track 3** of the alternator

Repair if necessary.

AFTER REPAIR	Deal with any faults detected by the diagnostic tool. Clear the computer memory. Carry out a road test followed by another check with the **diagnostic tool**.

GETtheMANUALS.org

DF175 **CONTINUED 2**	

Check the **continuity and the absence of interference resistance** on the following connection:

Diesel computer **track A 53** → **track 50** of the alternator opto relay

Diesel computer **track A 24** → **track 28** of the fuse box (F6)

Fuse box (F6) **track 28** → **tracks 52** and **48** of the alternator opto relay

Alternator opto relay **track 51** → **track 2** of the alternator

Repair if necessary.

If the fault is still present**, contact the Techline**.

AFTER REPAIR	Deal with any faults detected by the diagnostic tool. Clear the computer memory. Carry out a road test followed by another check with the **diagnostic tool**.

GETtheMANUALS.org

DF176 PRESENT OR STORED	LOW-SPEED FAN UNIT CIRCUIT CO.0 : Open circuit or short circuit to earth CC.1 : Short circuit to + 12 V

NOTES	**Special notes:** Use bornier **Elé. 1681** for all operations on the engine management computer connectors.

CO.0	***NOTES***	**Conditions for applying the fault finding procedure to stored faults:** The fault is declared as present if: – the computer does not detect voltage on **track A 18** when operating the relay, – under + APC,
		Special note: Run the **AC038 Low speed fan relay** command to check whether the relay is working.

Manipulate the wiring harness between the diesel computer and the fan circuit to detect a status change (present ↔ stored)
Look for possible damage to the wiring harness, check **the connection and condition** of the fan circuit and its connections.
Repair if necessary.

Check the **continuity and the absence of interference resistance** on the following connection:

Low speed fan relay **track 11** ⟶ Diesel computer **track A 18**

Repair if necessary.

Check that the low speed fan unit relay **coil** is not cut and that the contacts are operational.
Replace the relay if necessary.

If the fault is still present**, contact the Techline**.

AFTER REPAIR	Deal with any faults detected by the diagnostic tool. Clear the computer memory. Carry out a road test followed by another check with the **diagnostic tool**.

GETtheMANUALS.org

DF176 **CONTINUED**	

CC.1	***NOTES***	**Conditions for applying the fault finding procedure to stored faults:** The fault is declared present: – the computer does not detect voltage on **track A 18** when operating the relay.
		Special note: Run the **AC038 Low speed fan relay** command to check whether the relay is working.

Manipulate the wiring harness between the diesel computer and the fan circuit to detect a status change (present ↔ stored) Look for possible damage to the wiring harness, check **the connection and condition** of the fan circuit and its connections. Repair if necessary.
Check the **continuity, insulation from + 12 V and the absence of interference resistance** for the following connection: Low speed fan relay **track 11** ⟶ Diesel computer **track A 18** Repair if necessary.
Check that the low speed fan unit relay **coil** is not cut and that the contacts are operational. Replace the relay if necessary.
If the fault is still present**, contact the Techline**.

AFTER REPAIR	Deal with any faults detected by the diagnostic tool. Clear the computer memory. Carry out a road test followed by another check with the **diagnostic tool**.

GETtheMANUALS.org

DF177 PRESENT OR STORED	HIGH-SPEED FAN UNIT CIRCUIT CO.0 : Open circuit or short circuit to earth CC.1 : Short circuit to + 12 V

NOTES	**Special notes:** Use bornier **Elé. 1681** for all operations on the engine management computer connectors.

CO.0	***NOTES***	**Conditions for applying the fault finding procedure to stored faults:** The fault is declared present: – if the computer does not detect voltage on **track A 38** when operating the relay, – under + APC,
		Special note: Run the **AC039 High speed fan unit relay** command to check whether the relay is working.

Manipulate the wiring harness between the diesel computer and the fan circuit to detect a status change.
Look for possible damage to the wiring harness, check **the connection and condition** of the fan circuit and its connections.
Repair if necessary.

Check for **insulation against earth, continuity and the absence of interference resistance** on the following connection:

High speed fan relay **track 60** → Diesel computer **track A 38**
High speed fan relay **track 7** →

Repair if necessary.

Check that the high speed fan unit relay coils are not cut and that the contacts are operational.
Replace the relay if necessary.

If the fault is still present**, contact the Techline**.

AFTER REPAIR	Deal with any faults detected by the diagnostic tool. Clear the computer memory. Carry out a road test followed by another check with the **diagnostic tool**.

GETtheMANUALS.org

DF177 **CONTINUED**	

CC.1	***NOTES***	**Conditions for applying the fault finding procedure to stored faults:** The fault is declared as present if: – the computer does not detect voltage on **track A 38** when operating the relay.
		Special note: Run the **AC039 High speed fan unit relay** command to check whether the relay is working.

Manipulate the wiring harness between the diesel computer and the fan circuit to detect a status change (present ↔ stored)
Look for possible damage to the wiring harness, check **the connection and condition** of the fan circuit and its connections.
Repair if necessary.

Check the **continuity, insulation from + 12 V and the absence of interference resistance** on the following connection:

High speed fan relay **track 60** → Diesel computer **track A 38**
High speed fan relay **track 7** →

Repair if necessary.

Check that the high speed fan relay coil is not cut and that the contacts are working correctly.
Replace the relay if necessary.

If the fault is still present**, contact the Techline**.

AFTER REPAIR	Deal with any faults detected by the diagnostic tool. Clear the computer memory. Carry out a road test followed by another check with the **diagnostic tool**.

GETtheMANUALS.org

DF186 PRESENT OR STORED	HEATER PLUG CIRCUIT CC.0 : Short circuit to earth CO.1 : Short circuit or open circuit to + 12 V

NOTES	**Priority when dealing with a number of faults:** First perform preheating circuit fault finding referring to faults **DF262 Heater plug group no. 1 circuit** then **DF263 Heater plug group no. 2 circuit**.
	Special notes: Use bornier **Elé. 1681** for all operations on the engine management computer connectors.

CC.0	***NOTES***	**Conditions for applying the fault finding procedure to stored faults:** The fault is declared present: – if the voltage on the control line (**track A 68**) is greater than **4.7 V**, – under + APC,

Manipulate the wiring harness between the diesel computer and the preheating unit to detect a status change (present ↔ stored)
Look for possible damage to the harness, and check **the condition and connection** of the preheating unit and its connections.
Repair if necessary.

Check for **insulation from + 12 V, continuity and absence of interference resistance** on the following connections:

Preheating unit track **9** → Diesel computer **track A 49**

Preheating unit track **9** → Diesel computer **track A 68**

Preheating unit **track 8** → Diesel computer **track A 19**

Repair if necessary.

AFTER REPAIR	Deal with any faults detected by the diagnostic tool. Clear the computer memory. Carry out a road test followed by another check with the **diagnostic tool**.

GETtheMANUALS.org

DF186 **CONTINUED 1**	

Check for **insulation from + 12 V, continuity and absence of interference resistance** on the following connections:

Alternator **track 1** → preheating unit **track A 3**

Alternator **track 2** → preheating unit **track B 3**

Repair if necessary.

If the fault is still present, replace the preheating unit (see **MR 353, MR 402 or MR 361 Mechanical, 13C, Preheating, Pre-postheating unit**).

Clear the fault memory and start the engine.
If the fault is still present**, contact the Techline**.

AFTER REPAIR	Deal with any faults detected by the diagnostic tool. Clear the computer memory. Carry out a road test followed by another check with the **diagnostic tool**.

GETtheMANUALS.org

DF186 **CONTINUED 2**	

CO.1	***NOTES***	**Conditions for applying the fault finding procedure to stored faults:** The fault is declared present if the control line voltage (**track A 68**) is greater than **4.7 V**.
		Special note: Run the **AC037 Preheating relay** command to check whether the relay is working.

Manipulate the wiring harness between the diesel computer and the preheating unit to detect a status change (present ↔ stored)
Look for possible damage to the harness, and check **the condition and connection** of the preheating unit and its connections.
Repair if necessary.

Check for **insulation against earth, continuity and the absence of interference resistance** on the following connection:

Preheating unit **track 8** → Diesel computer **track A 19**

Repair if necessary.

Check for **insulation from + 12 V, continuity and absence of interference resistance** on the following connections:

Alternator **track 1** → preheating unit **track A 3**

Alternator **track 2** → preheating unit **track B 3**

Repair if necessary.

Check the wiring harness and the condition between the preheating circuit **70 A** fuse and the preheating unit. Replace it if necessary.

If the fault is still present, replace the preheating unit (see **MR 353, MR 402 or MR 361 Mechanical, 13C, Preheating, Pre-postheating unit**).

Clear the fault memory and start the engine.
If the fault is still present**, contact the Techline**.

AFTER REPAIR	Deal with any faults detected by the diagnostic tool. Clear the computer memory. Carry out a road test followed by another check with the **diagnostic tool**.

GETtheMANUALS.org

DF188 PRESENT OR STORED	STARTING SIGNAL CO.0 : Open circuit or short circuit to earth CC.1 : Short circuit to + 12 V

NOTES	**Special notes:** Use bornier **Elé. 1681** for all operations on the engine management computer connectors.

CO.0	***NOTES***	**Conditions for applying the fault finding procedure to stored faults:** The fault is declared as present if: – the feed voltage is less than **2.7 V** when starting the engine. – the engine speed less than **360 rpm**.

Manipulate the wiring harness between the diesel computer and the starter relay to detect a status change (present ↔ stored)
Look for possible damage to the harness, and check **the connections and condition** of the starter relay and its connections.
Repair if necessary.

Check the **condition of the battery** and the charging circuit (see **Technical Note 6014A, Charging circuit check**).
Check **the condition** of the **vehicle earths**.

Check for **insulation against earth, continuity and the absence of interference resistance** on the following connection:

Diesel computer **track A 42** → starter relay **track 3**

If the fault is still present, check the condition and connection of the **intermediate connector R262**.
Repair if necessary.

If the fault is still present**, contact the Techline**.

AFTER REPAIR	Deal with any faults detected by the diagnostic tool. Clear the computer memory. Carry out a road test followed by another check with the **diagnostic tool**.

GETtheMANUALS.org

DF188 **CONTINUED**	

CC.1	***NOTES***	**Conditions for applying the fault finding procedure to stored faults:** The fault is declared present if voltage is present with the engine stopped.

Manipulate the wiring harness between the diesel computer and the starter relay to detect a status change (present ↔ stored) Look for possible damage to the harness, and check **the connections and condition** of the starter relay and its connections. Repair if necessary.
Check for **+ 12 V** on **track A 42** of the diesel computer. Repair if necessary.
If the fault is still present**, contact the Techline**.

AFTER REPAIR	Deal with any faults detected by the diagnostic tool. Clear the computer memory. Carry out a road test followed by another check with the **diagnostic tool**.

GETtheMANUALS.org

DF196 PRESENT OR STORED	PEDAL SENSOR CIRCUIT GANG NO. 1 1.DEF: Inconsistency between pedal gang 1 and gang 2 CO.0 : Open circuit or short circuit to earth CC : Short circuit

NOTES	**Special notes:** Use bornier **Elé. 1681** for all operations on the engine management computer connectors.

1.DEF	***NOTES***	**Conditions for applying the fault finding procedure to stored faults:** The fault is declared present when there is a large signal difference between potentiometers 1 and 2.

Manipulate the wiring harness between the diesel computer and the accelerator potentiometer to detect a status change (present ↔ stored).
Look for any harness damage, and check **the condition and connection** of the accelerator potentiometer and its connections.
Repair if necessary.

Check the **insulation, continuity and the absence of interference resistance** on the following connections:

Accelerator potentiometer **track 4** → Diesel computer **track A 7**

Accelerator potentiometer **track 3** → Diesel computer **track A 27**

Accelerator potentiometer **track 2** → Diesel computer **track A 31**

Accelerator potentiometer **track 5** → Diesel computer **track A 26**

Accelerator potentiometer **track 6** → Diesel computer **track A 8**

Accelerator potentiometer **track 1** → Diesel computer **track A 11**

If the fault is still present, check the **connection** and **the condition** of the intermediate **R262** connector.
Repair if necessary.

If the fault is still present, replace the accelerator potentiometer (see **MR 353 or MR 402, 361 Mechanical, 13B, Diesel Injection, Accelerator potentiometer**).

If the fault is still present**, contact the Techline**.

AFTER REPAIR	Deal with any faults detected by the diagnostic tool. Clear the computer memory. Carry out a road test followed by another check with the **diagnostic tool**.

GETtheMANUALS.org

DF196 **CONTINUED 1**	

CO.0	***NOTES***	**Conditions for applying the fault finding procedure to stored faults:** The fault is declared present if the voltage on the potentiometer no. 1 signal line is less than **0.17 V**.

Manipulate the wiring harness between the diesel computer and the accelerator potentiometer to detect a status change (present ↔ stored).
Look for any harness damage, and check **the condition and connection** of the accelerator potentiometer and its connections.
Repair if necessary.

Check the **continuity and the absence of interference resistance** on the following connection:

Accelerator potentiometer **track 4** ⟶ Diesel computer **track A 7**

If the fault is still present, check the **connection** and **the condition** of the brown intermediate connector.
Repair if necessary.

Check for insulation against earth, continuity and absence of interference resistance on the following connection:

Accelerator potentiometer **track 2** ⟶ Diesel computer **track A 31**

If the fault is still present, check the **connection** and **the condition** of the intermediate **R262** connector.
Repair if necessary.

Measure the **resistance** of pedal sensor no.1 between **tracks 4** and **2**.
Replace the accelerator potentiometer if the **resistance** is not **1200 ± 500 Ω**.
Replace the sensor if the resistance is not compliant.

If the fault is still present**, contact the Techline**.

AFTER REPAIR	Deal with any faults detected by the diagnostic tool. Clear the computer memory. Carry out a road test followed by another check with the **diagnostic tool**.

GETtheMANUALS.org

DF196 **CONTINUED 2**	

CC	***NOTES***	**Conditions for applying the fault finding procedure to stored faults:** The fault is declared present if the voltage on the potentiometer no. 1 signal line is greater than **3.6 V**.

Manipulate the wiring harness between the diesel computer and the accelerator potentiometer to detect a status change (present ↔ stored).
Look for any harness damage, and check **the condition and connection** of the accelerator potentiometer and its connections.
Repair if necessary.

Check the **continuity and the absence of interference resistance** on the following connection:

Accelerator potentiometer **track 2** ⟶ Diesel computer **track A 31**

If the fault is still present, check the **connection** and **the condition** of the intermediate **R262** connector.
Repair if necessary.

Check the **continuity, insulation from + 12 V and the absence of interference resistance** on the following connection:

Accelerator potentiometer **track 3** ⟶ Diesel computer **track A 27**

If the fault is still present, check the **connection** and **the condition** of the intermediate **R262** connector.
Repair if necessary.

Measure the **resistance** of pedal sensor no.1 between **tracks 4** and **2**.
Replace the accelerator potentiometer if the **resistance** is not **1200 ± 500 Ω**.
If necessary replace the sensor.

If the fault is still present**, contact the Techline**.

AFTER REPAIR	Deal with any faults detected by the diagnostic tool. Clear the computer memory. Carry out a road test followed by another check with the **diagnostic tool**.

GETtheMANUALS.org

DF197 PRESENT OR STORED	FUEL PRESSURE SIGNAL CO.0 : Open circuit or short circuit to earth CC.1 : Short circuit to + 12 V 1.DEF: Measured pressure too low 2.DEF: Measured pressure too high

NOTES	**Special notes:** Use bornier **Elé. 1681** for all operations on the engine management computer connectors.

CO.0	***NOTES***	**Conditions for applying the fault finding procedure to stored faults:** The fault is declared present if the voltage on the fuel pressure signal line is greater than **4.7 V**.

Manipulate the wiring harness between the diesel computer and the fuel rail pressure sensor in order to detect a status change (present ↔ stored)
Look for possible damage to the harness, and check **the connection and the condition** of the fuel rail pressure sensor and its connections.
Repair if necessary.

Check for **insulation from earth**, **continuity and absence of interference resistance** on the fuel pressure signal connections:

Fuel pressure sensor **track 1** → Diesel computer **track B 106**

Fuel pressure sensor **track 1** → Diesel computer **track B 107**

Fuel pressure sensor **track 3** → Diesel computer **track B 98**

Repair if necessary.

Check for **earth** on the following connection:

Fuel pressure sensor **track 2** → Diesel computer **track B 87**

Repair if necessary.

If the fault is still present, replace the injection rail (see **MR 353, MR 402 or MR 361 Mechanical, 13B, Diesel injection, Injection rail**).
If the fault is still present, **contact Techline**.

AFTER REPAIR	Deal with any faults detected by the diagnostic tool. Clear the computer memory. Carry out a road test followed by another check with the **diagnostic tool**.

GETtheMANUALS.org

DF197 **CONTINUED 1**	

CC.1	***NOTES***	**Conditions for applying the fault finding procedure to stored faults:** The fault is declared present if the voltage on the fuel pressure signal line is less than **0.7 V**.

Manipulate the wiring harness between the diesel computer and the fuel rail pressure sensor in order to detect a status change (present ↔ stored)
Look for possible damage to the harness, and check **the connection and the condition** of the fuel rail pressure sensor and its connections.
Repair if necessary.

Check the **insulation against + 5 and + 12 V, the continuity, and absence of interference resistance** on the fuel pressure signal connections:

Fuel pressure sensor **track 1** → Diesel computer **track B 106**

Fuel pressure sensor **track 1** → Diesel computer **track B 107**

Fuel pressure sensor **track 2** → Diesel computer **track B 87**

Repair if necessary.

Check for **+ 5 V** on the following connection:

Fuel pressure sensor **track 3** → Diesel computer **track B 98**

Repair if necessary.

If the fault is still present, replace the injection rail (see **MR 353, MR 402 or MR 361 Mechanical, 13B, Diesel injection, Injection rail**).
If the fault is still present**, contact the Techline**.

AFTER REPAIR	Deal with any faults detected by the diagnostic tool. Clear the computer memory. Carry out a road test followed by another check with the **diagnostic tool**.

GETtheMANUALS.org

DF197 **CONTINUED 2**	

1.DEF	***NOTES***	**Priorities when dealing with a number of faults:** Treat as a priority any other fault that is present or stored.
		Conditions for applying the fault finding procedure to stored faults: The fault is declared as present if: – there is no fuel pressure sensor short circuit or open circuit fault. – there is no power unit fault, – there is no rail pressure solenoid valve fault, – there is no fuel temperature fault. **During the starting phase:** – the rail pressure is greater than **150 bar**. – the engine speed is between **50** and **300 rpm**, – injection flow greater than **5 mm^3/stroke**. **Engine running:**- – the engine speed is between **500** and **5200 rpm**, – the fuel temperature less than **160 ˚C**, – pressure loop difference greater than **150 bar**.

Check the fuel pressure sensor connections.
Check the fuel pressure solenoid valve connections.
Check the engine management computer connections.
Repair if necessary.

Check the condition of the high pressure injection rail and make sure there is no leakage.
Check operation of the fuel pressure regulator (e.g., locked open).
a) For all Vdiags except VELSATIS Vdiag 04:
Check the **ET038 ENGINE** status and parameters **PR364 Fuel flow correction cylinder 1, PR405 Fuel flow correction cylinder 2, PR406 Fuel flow correction cylinder 3, PR365 Fuel flow correction cylinder 4, PR407 Fuel flow correction cylinder 5** and **PR408 Fuel flow correction cylinder 6**, see the conformity check in the **Fuel circuit** sub-function.
Replace the injection rail if necessary.
If the injectors are not faulty, first replace the regulator.
If the fault is still present, replace the high pressure pump (see **MR 353, MR 402, or MR 361 Mechanical, 13B, Diesel Injection, High pressure pump**).
b) For VELSATIS Vdiag 04:
Perform the conformity check in the **Fuel circuit** sub-function.

If the fault is still present**, contact the Techline**.

AFTER REPAIR	Deal with any faults detected by the diagnostic tool. Clear the computer memory. Carry out a road test followed by another check with the **diagnostic tool**.

GETtheMANUALS.org

DF197 **CONTINUED 3**	

2.DEF	***NOTES***	**Priorities when dealing with a number of faults:** Treat as a priority any other fault that is present or stored.
		Conditions for applying the fault finding procedure to stored faults: The fault is declared present: **Engine running:** – engine speed greater than **500 rpm**, – there is no fuel pressure sensor short circuit or open circuit fault. – there is no power unit fault, – **there is no rail pressure solenoid valve fault,** – there is no fuel temperature fault after acceleration.

Check the fuel pressure sensor connections.
Check the fuel pressure solenoid valve connections.
Check the engine management computer connections.
Repair if necessary.

Check the condition of the high pressure injection rail and make sure there is no leakage.
Check operation of the fuel pressure regulator (e.g., locked open).

– check the priming of the low pressure diesel circuit,
– also check the conformity of the diesel filter connections and that the diesel fuel is not saturated with water.
– check that there are no air bubbles between the filter and the low pressure pump,
– Check the seal of the low and high pressure diesel fuel circuits (visual inspection, odour, etc.): pump housing, overpressure valve, pipes, rail and injector unions, injector wells, etc.).

Step 1
– Check the connections of the following components:
- rail pressure sensor,
- fuel pressure regulator,
- computer,
- fuel temperature sensor,
- Also check the condition of the wiring harness (wear, pinching, etc.).

If all of the checks reveal no faults, proceed to stage 2.
Checking the fuel Low Pressure system:
Step 2
– Check the fuel level in the tank:
- Fill up if necessary and reproduce the fault. Otherwise, proceed to step 3.

AFTER REPAIR	Deal with any faults detected by the diagnostic tool. Clear the computer memory. Carry out a road test followed by another check with the **diagnostic tool**.

GETtheMANUALS.org

DF197 **CONTINUED 4**	

Step 3
– check that there are no fuel leaks (odour, etc.):
- repair if necessary, otherwise proceed to step 4.

Step 4
– check the sealing of the Low Pressure circuit:
- if there are air bubbles present or external leaks, check the filter bleed screw, and repair the leaks if necessary.
- if the pipes or hoses are worn or damaged, repair if necessary, otherwise proceed to step 5.

Step 5
– Check the fuel priming bulb:
- If the unit is compressed, check for the loss of load before the unit.
- if the engine is fitted with a priming pump, check the variation of flow in the fuel filter, otherwise go to step 6.

Step 6
– check the condition of the fuel filter:
- replace the filter if it is dirty. The fuel filter tank must be cleaned before the new filter is fitted, to prevent dust particles from being transferred to the high pressure pump and the high pressure circuit.

– ignition on, and engine stopped for over **1 minute**:
– display **PR038 Rail pressure**.
  – if the value is less than **50 bar**, the sensor is OK.
  – if not replace the rail pressure sensor.

For all Vdiags except VELSATIS Vdiag 04:
Check the **ET038 "ENGINE**" status and parameters **PR364 "Fuel flow correction cylinder 1", PR405 "Fuel flow correction cylinder 2", PR406 "Fuel flow correction cylinder 3", PR365 "Fuel flow correction cylinder 4", PR407 "Fuel flow correction cylinder 5"** and **PR408 "Fuel flow correction cylinder 6"**, see the conformity check in the **Fuel circuit** sub-function.

If the fault is still present**, contact the Techline**.

AFTER REPAIR	Deal with any faults detected by the diagnostic tool. Clear the computer memory. Carry out a road test followed by another check with the **diagnostic tool**.

GETtheMANUALS.org

DF198 PRESENT OR STORED	PEDAL SENSOR CIRCUIT GANG NO. 2 CO.0 : Open circuit or short circuit to earth CC : Short circuit

NOTES	**Special notes:** Use bornier **Elé. 1681** for all operations on the engine management computer connectors.

CO.0	***NOTES***	**Conditions for applying the fault finding procedure to stored faults:** The fault is declared present if the voltage on the potentiometer no. 1 signal line is less than **0.17 V**.

Manipulate the wiring harness between the diesel computer and the accelerator potentiometer to detect a status change (present ↔ stored).
Look for any harness damage, and check **the condition and connection** of the accelerator potentiometer and its connections.
Repair if necessary.

Check the **continuity and the absence of interference resistance** on the following connection:

Accelerator potentiometer **track 5** ⟶ Diesel computer **track A 26**

Repair if necessary.

Check for insulation against earth, continuity and absence of interference resistance on the following connection:

Accelerator potentiometer **track 1** ⟶ Diesel computer **track A 11**

Repair if necessary.

Measure the **resistance** of pedal sensor no. 2 between **tracks 5** and **1**.
Replace the accelerator potentiometer if the **resistance** is not **1700 ± 500 Ω**.
If necessary replace the sensor.

If the fault is still present**, contact the Techline**.

AFTER REPAIR	Deal with any faults detected by the diagnostic tool. Clear the computer memory. Carry out a road test followed by another check with the **diagnostic tool**.

GETtheMANUALS.org

DF198 **CONTINUED**	

CC	***NOTES***	**Conditions for applying the fault finding procedure to stored faults:** The fault is declared present if the voltage on the potentiometer no. 1 signal line is greater than **3.6 V**.

Manipulate the wiring harness between the diesel computer and the accelerator potentiometer to detect a status change (present ↔ stored).
Look for any harness damage, and check **the condition and connection** of the accelerator potentiometer and its connections.
Repair if necessary.

Check for insulation against earth, continuity and absence of interference resistance on the following connection:

Accelerator potentiometer **track 1** ⟶ Diesel computer **track A 11**

Repair if necessary.

Check the **continuity, insulation from + 12 V and the absence of interference resistance** for the following connection:

Accelerator potentiometer **track 6** ⟶ Diesel computer **track A 8**

Repair if necessary.

Measure the **resistance** of pedal sensor no. 2 between **tracks 5** and **1**.
Replace the accelerator potentiometer if the **resistance** is not **1700 ± 500 Ω**.
If necessary replace the sensor.

If the fault is still present**, contact the Techline**.

AFTER REPAIR	Deal with any faults detected by the diagnostic tool. Clear the computer memory. Carry out a road test followed by another check with the **diagnostic tool**.

GETtheMANUALS.org

DF208 PRESENT OR STORED	FUEL PRESSURE SOLENOID VALVE CIRCUIT 1.DEF: Open circuit or short circuit to earth 2.DEF: Short circuit to + 12 V 3.DEF: Open circuit or short circuit to earth 4.DEF: Short circuit

NOTES	**Special notes:** Use bornier **Elé. 1681** for all operations on the engine management computer connectors.

1.DEF	***NOTES***	**Conditions for applying the fault finding procedure to stored faults:** The fault is declared as present if: – the computer detects too low a voltage on **tracks B 120** and **B 121**.

Manipulate the wiring harness between the diesel computer and the regulation solenoid valves to detect a change in status (present ↔ stored).
Look for possible damage to the harness, and check **the condition and connection** of the regulating solenoid valves and connections.
Repair if necessary.

Check the **insulation, continuity and absence of interference resistance** on the following connections:

Both regulating solenoid valves **track 2** ⟶ Diesel computer **track B 116**

Repair if necessary.

If the fault is still present**, contact the Techline**.

AFTER REPAIR	Deal with any faults detected by the diagnostic tool. Clear the computer memory. Carry out a road test followed by another check with the **diagnostic tool**.

GETtheMANUALS.org

DF208 **CONTINUED 1**	

2.DEF	***NOTES***	**Conditions for applying the fault finding procedure to stored faults:** The fault is declared as present if: – The computer detects **+ 12 V** on one of its control lines.

Manipulate the wiring harness between the diesel computer and the regulation solenoid valves to detect a change in status (present ↔ stored).
Look for possible damage to the harness, and check **the condition and connection** of the regulating solenoid valves and connections.
Repair if necessary.

Check for **continuity, absence of interference resistance and insulation from + 12 V** on the following connections:

Regulating solenoid valve no. 1 **track 1** → Diesel computer **track B 121**

Regulating solenoid valve no. 2 **track 1** → Diesel computer **track B 120**

Repair if necessary.

If the fault is still present**, contact the Techline**.

AFTER REPAIR	Deal with any faults detected by the diagnostic tool. Clear the computer memory. Carry out a road test followed by another check with the **diagnostic tool**.

GETtheMANUALS.org

DF208 **CONTINUED 2**	

3.DEF	***NOTES***	**Conditions for applying the fault finding procedure to stored faults:** The fault is declared as present if: – the computer detects a voltage of less than **12 V** on **track B 116**.

Manipulate the wiring harness between the diesel computer and the regulation solenoid valves to detect a change in status (present ↔ stored).
Look for possible damage to the harness, and check **the condition and connection** of the regulating solenoid valves and connections.
Repair if necessary.

Check for **insulation against earth, continuity and the absence of interference resistance** on the following connection:

Both regulating solenoid valves **track 2** → Diesel computer **track B 116**

Regulating solenoid valve no. 1 **track 1** → Diesel computer **track B 121**

Regulating solenoid valve no. 2 **track 1** → Diesel computer **track B 120**

Repair if necessary.

Measure the **resistance** of both solenoid valves between **tracks 1** and **2**.
Replace them if the **resistance** is not between **1.3 Ω** and **1.9 Ω**.

Ensure **insulation from earth** of the two solenoid valves, and replace them if necessary.

If the fault is still present**, contact the Techline**.

AFTER REPAIR	Deal with any faults detected by the diagnostic tool. Clear the computer memory. Carry out a road test followed by another check with the **diagnostic tool**.

GETtheMANUALS.org

DF208 **CONTINUED 3**	

4.DEF	***NOTES***	**Conditions for applying the fault finding procedure to stored faults:** The fault is declared as present if: – the computer detects a voltage of more than **12 V** on **tracks B 120** and **B 121**.

Manipulate the wiring harness between the diesel computer and the regulation solenoid valves to detect a change in status (present ↔ stored).
Look for possible damage to the harness, and check **the condition and connection** of the regulating solenoid valves and connections.
Repair if necessary.

Check for **insulation from earth, continuity and absence of interference resistance** on the following connections:

Both regulating solenoid valves **track 2** ⟶ Diesel computer **track B 116**

Repair if necessary.

Measure the **resistance** of both solenoid valves between **tracks 1** and **2**.
Replace them if the **resistance** is not between **1.3 Ω** and **1.9 Ω**.

If the fault is still present**, contact the Techline**.

AFTER REPAIR	Deal with any faults detected by the diagnostic tool. Clear the computer memory. Carry out a road test followed by another check with the **diagnostic tool**.

GETtheMANUALS.org

DF209 PRESENT OR STORED	EGR VALVE POSITION SENSOR CIRCUIT CO.0 : Open circuit or short circuit to earth CC.1 : Short circuit to + 12 V

NOTES	**Special notes:** Use bornier **Elé. 1681** for all operations on the engine management computer connectors.

CO.0	***NOTES***	**Conditions for applying the fault finding procedure to stored faults:** The fault is declared present if the EGR position signal voltage is less than **1.1 V**.

Manipulate the wiring harness between the diesel computer and the EGR valve in order to detect a status change (present ↔ stored)
Look for possible damage to the wiring harness, check **the connection and the condition** of the EGR valve and its connections.
Repair if necessary.

Check for **insulation from earth, continuity and the absence of interference resistance** on the following connections:

EGR valve **track 1** → Diesel computer **track B 94**

EGR valve **track 3** → Diesel computer **track B 98**

Repair if necessary.

If the fault is still present, replace the EGR valve (see **MR 353, MR 402 or MR 361 Mechanical, 12A, Fuel mixture, Exhaust gas recirculation valve**).
If the fault is still present**, contact the Techline**.

AFTER REPAIR	Deal with any faults detected by the diagnostic tool. Clear the computer memory. Carry out a road test followed by another check with the **diagnostic tool**.

GETtheMANUALS.org

DF209 **CONTINUED**	

CC.1	***NOTES***	**Conditions for applying the fault finding procedure to stored faults:** The fault is declared present if the EGR position signal voltage is greater than **4.7 V**.

Manipulate the wiring harness between the diesel computer and the EGR valve in order to detect a status change (present ↔ stored)
Look for possible damage to the wiring harness, check **the connection and the condition** of the EGR valve and its connections.
Repair if necessary.

Check the following connections for **insulation against + 12 V, continuity and absence of interference resistance**:

EGR valve **track 1** → Diesel computer **track B 94**

EGR valve **track 2** → Diesel computer **track B 87**

Repair if necessary.

Measure the **resistance** of the EGR valve between **tracks 4** and **5**.
Replace the EGR valve, if the resistance is not **6.8 ± 0.5 Ω at 20 °C**.
Measure the **resistance** of the EGR valve between **tracks 2** and **3**.
Replace the EGR valve if the resistance is not **5 ± 0.5 Ω at 20 °C**.
(see **MR 353, MR 402 Mechanical, 12A, Fuel mixture, Exhaust gas recirculation valve**).

If the fault is still present, replace the EGR valve (see **MR 353, MR 402 or MR 361 Mechanical, 12A, Fuel mixture, Exhaust gas recirculation valve**).
If the fault is still present**, contact the Techline**.

AFTER REPAIR	Deal with any faults detected by the diagnostic tool. Clear the computer memory. Carry out a road test followed by another check with the **diagnostic tool**.

GETtheMANUALS.org

DF216 PRESENT OR STORED	SENSOR FEED NO. 1 VOLTAGE DEF : Open circuit or short circuit to sensor power supply earth

NOTES	**Conditions for applying the fault finding procedure to stored faults:** The fault is declared present when the computer detects an inconsistency in the power supply to its sensors. **Special notes:** Use bornier **Elé. 1681** for all operations on the engine management computer connectors.

Sensor feed no. 1 is dedicated to the following components:
– fuel rail pressure sensor,
– gas recycling potentiometer,
– turbocharger pressure sensor,
– turbocharger position sensor.

Display parameter **PR215 Sensor power supply voltage no. 1**:
– If the voltage is less than **3.9 V** or greater than **4.1 V**, disconnect the sensors mentioned above one by one.

If, following disconnection, the voltage becomes normal again, replace the sensor concerned or repair the connection (wait a few seconds **between each disconnection** for the computer to make its measurement).
Clear the faults created by the multiple disconnections.
If, with sensors disconnected the voltage is still less than **3.9 V** or greater than **4.1 V**:
– check for **insulation against earth, continuity and the absence of interference resistance** on the following connection:

Injection computer **track B 98**
– Check the **insulation from + 5 V and + 12 V, continuity and absence of interference resistance** on the following connection:

Injection computer **track B 87**
– check for **+ 5 V** on **track B 98** of the injection computer and on each of its sensors.

If the fault is still present, check the computer connections.
If the fault is still present**, contact the Techline**.

AFTER REPAIR	Deal with any faults detected by the diagnostic tool. Clear the computer memory. Carry out a road test followed by another check with the **diagnostic tool**.

GETtheMANUALS.org

DF217 PRESENT OR STORED	SENSOR SUPPLY VOLTAGE No. 2 DEF: Open circuit or short circuit to sensor power supply earth

NOTES	**Conditions for applying the fault finding procedure to stored faults:** The fault is declared present when the computer detects an inconsistency in the power supply to its sensors.
	Special notes: Use bornier **Elé. 1681** for all operations on the engine management computer connectors.

Sensor supply no. 2 is dedicated to the following components:
– fuel temperature sensor,
– coolant temperature sensor,
– correction resistance of injectors 1 to 6.

If, with sensors disconnected, the voltage is still less than **3.9 V** or greater than **4.1 V** :
– Check the **insulation from + 5V and +12V, continuity and absence of interference resistance** on the following connection:

Injection computer **track B 95.**

If the fault is still present, check the computer connections.
If the fault is still present, contact the Techline.

AFTER REPAIR	Deal with any faults displayed by the diagnostic tool. Clear the computer memory. Carry out a road test followed by another check with the **diagnostic tool**.

GETtheMANUALS.org

DF218 PRESENT OR STORED	MICROCONTROLLER DEF: Internal electronic fault

NOTES	**Conditions for applying the fault finding procedure to stored faults:** The fault is declared present after: – the computer detects an internal electronic fault, – + after ignition feed on.

Clear the faults from memory and then start the engine.
Switch off the ignition and wait 40 seconds. Switch on + after ignition again. Check for present faults and deal with them. Clear the faults.
If the fault is still present, contact the Techline.

AFTER REPAIR	Deal with any faults displayed by the diagnostic tool. Clear the computer memory. Carry out a road test followed by another check with the **diagnostic tool**.

GETtheMANUALS.org

DF262 PRESENT OR STORED	HEATER PLUG GROUP NO. 1 CIRCUIT DEF: Row 1 heater plugs in CO.0

NOTES	**Conditions for applying the fault finding procedure to stored faults:** The fault is considered present if: – the voltage on the diagnostic line is greater than **4.7 V**.
	Special note: – run the **A C037 Preheating relay** command to check whether the relay is working. – use bornier **Elé. 1681** for all operations on the engine management computer connectors.

Check the condition of the **70 A** fuse for the rear preheating circuit. Replace it if necessary.
Check the **condition** of the supply lines **tracks 6, 4 and 2** between the preheating unit and the back row plugs and check their **insulation to earth** and their **continuity**. Repair if necessary.
Check the **condition** of preheating unit supply line **track 1** from the battery, and check its continuity. If everything is correct, replace the preheating unit.
Check the **condition** and **resistance** of the back row heater plugs. Replace the heater plugs if the **resistance** is greater than **30 Ω**.
Clear the fault memory and start the engine. **If the fault is still present**, contact the Techline.

AFTER REPAIR	Deal with any faults displayed by the diagnostic tool. Clear the computer memory. Carry out a road test followed by another check with the **diagnostic tool**.

GETtheMANUALS.org

DF263 PRESENT OR STORED	HEATER PLUG GROUP NO. 2 CIRCUIT DEF : Heater plugs row 2 in CO.0

NOTES	**Conditions for applying the fault finding procedure to stored faults:** The fault is considered present if: – the voltage on the diagnostic line is greater than **4.7 V**.
	Special note: – run the **A C037 Preheating relay** command to check whether the relay is working. – use bornier **Elé. 1681** for all operations on the engine management computer connectors.

Check the condition of the **70 A** fuse for the front preheating circuit. Replace it if necessary.
Check the **condition** of the supply lines **tracks 7, 5 and 3** between the preheating unit and the front row plugs and check their **insulation to earth** and their **continuity**. Repair if necessary.
Check the **condition** of the preheating unit supply line **track 1** from the battery, and check its continuity. If everything is correct, replace the preheating unit.
Check the **condition** and **resistance** of the front row heater plugs. Replace the heater plugs if the **resistance** is greater than **30 Ω**.
Clear the fault memory and start the engine. **If the fault is still present**, contact the Techline.

AFTER REPAIR	Deal with any faults displayed by the diagnostic tool. Clear the computer memory. Carry out a road test followed by another check with the **diagnostic tool**.

GETtheMANUALS.org

DF264 PRESENT OR STORED	POWER UNIT 1.DEF: Insulation fault on the injector power lines

NOTES	**Conditions for applying the fault finding procedure to stored faults:** The fault is considered present if: – the engine speed is greater than **500 rpm**, – the battery voltage is greater than **11 V**, – an insulation fault appears on the injector power lines.
	Special notes: Use bornier **Elé. 1681** for all operations on the engine management computer connectors.

Disconnect the connector from the Power Unit.

Check for **+ 12 V** on **track 1** of the **black connector** of the Power Unit.
Check for earth on **track 8** of the **black connector** of the Power Unit.
Repair or replace the Power Unit if necessary (see **MR 353, MR 402 or MR 361 Mechanical, 13B, Diesel Injection, Power computer**).

Check for **insulation against earth, continuity and the absence of interference resistance** on the following connection:

Diesel computer **track A 66** ⟶ Power Unit **grey connector, track 2**

Repair if necessary.

If the fault is still present, replace the Power Unit (see **MR 353, MR 402 or MR 361 Mechanical, 13B, Diesel injection, Power computer**).

Clear the fault memory and start the engine.
If the fault is still present, contact the Techline.

AFTER REPAIR	Deal with any faults displayed by the diagnostic tool. Clear the computer memory. Carry out a road test followed by another check with the **diagnostic tool**.

GETtheMANUALS.org

DF265 PRESENT OR STORED	INJECTOR NO. 1 DEF: Injector mechanical fault

NOTES	**Priority when dealing with a number of faults:** Deal with all other faults first if they are present or stored.
	Conditions for applying the fault finding procedure to stored faults: The fault is considered present if: – vehicle speed is zero, – engine speed is less than **850 rpm**, – the engine coolant temperature is greater than **70˚C**, – fault detection time is **10 seconds**.
	Special notes: Use bornier **Elé. 1681** for all operations on the engine management computer connectors.

With the engine stopped, disconnect the connector from injector 1.

Measure the **resistance** of the injector 1 coil between **tracks 1** and **2** of the injector connector.
Replace the injector if it is in **short circuit (R = 0 Ω)** or in **open circuit (resistance measurement = infinity).**
Otherwise, **reconnect injector no. 1**.
If **the fault is still present**, apply **test 10 Poor injector operation**.

Clear the fault memory and start the engine.
If the fault is still present, contact the Techline.

AFTER REPAIR	Deal with any faults displayed by the diagnostic tool. Clear the computer memory. Carry out a road test followed by another check with the **diagnostic tool**.

GETtheMANUALS.org

DF266 PRESENT OR STORED	INJECTOR No.2 DEF: Injector mechanical fault

NOTES	**Priority when dealing with a number of faults:** Deal with all other faults first if they are present or stored.
	Conditions for applying the fault finding procedure to stored faults: The fault is considered present if: – vehicle speed is zero, – engine speed is less than **850 rpm**, – the engine coolant temperature is greater than **70˚C**, – fault detection time is **10 seconds**.
	Special notes: Use bornier **Elé. 1681** for all operations on the engine management computer connectors.

With the engine stopped, disconnect the connector from injector 2.
Measure the **resistance** of injector 2 coil between **tracks 1** and **2** of the injector connector. Replace the injector if it is in **short circuit (R = 0 Ω)** or in **open circuit (resistance measurement = infinity).** Otherwise, **reconnect injector no. 2**. If **the fault is still present**, apply **test 10 Poor injector operation**.
Clear the fault memory and start the engine. **If the fault is still present**, contact the Techline.

AFTER REPAIR	Deal with any faults displayed by the diagnostic tool. Clear the computer memory. Carry out a road test followed by another check with the **diagnostic tool**.

GETtheMANUALS.org

DF267 PRESENT OR STORED	INJECTOR no. 3 DEF: Injector mechanical fault

NOTES	**Priority when dealing with a number of faults:** Deal with all other faults first if they are present or stored.
	Conditions for applying the fault finding procedure to stored faults: The fault is considered present if: – vehicle speed is zero, – engine speed is less than **850 rpm**, – the engine coolant temperature is greater than **70˚C**, – fault detection time is **10 seconds**.
	Special notes: Use bornier **Elé. 1681** for all operations on the engine management computer connectors.

With the engine stopped, disconnect the connector from injector 3.
Measure the **resistance** of the coil for injector 3 between **tracks 1** and **2** of the injector connector. Replace the injector if it is in **short circuit (R = 0 Ω)** or in **open circuit (resistance measurement = infinity).** Otherwise, **reconnect injector no. 3**. If **the fault is still present**, apply **test 10 Poor injector operation**.
Clear the fault memory and start the engine. **If the fault is still present**, contact the Techline.

AFTER REPAIR	Deal with any faults displayed by the diagnostic tool. Clear the computer memory. Carry out a road test followed by another check with the **diagnostic tool**.

GETtheMANUALS.org

DF268 PRESENT OR STORED	INJECTOR no. 4 DEF : Injector mechanical fault

NOTES	**Priority when dealing with a number of faults:** Deal with all other faults first if they are present or stored.
	Conditions for applying the fault finding procedure to stored faults: The fault is considered present if: – vehicle speed is zero, – engine speed is less than **850 rpm**, – the engine coolant temperature is greater than **70˚C**, – fault detection time is **10 seconds**.
	Special notes: Use bornier **Elé. 1681** for all operations on the engine management computer connectors.

With the engine stopped, disconnect the connector from injector 4.
Measure the **resistance** of the coil for injector 4 between **tracks 1** and **2** of the injector connector. Replace the injector if it is in **short circuit (R = 0 Ω)** or in **open circuit (resistance measurement = infinity).** Otherwise, **reconnect injector no. 4**. If **the fault is still present**, apply **test 10 Poor injector operation**.
Clear the fault memory and start the engine. **If the fault is still present**, contact the Techline.

AFTER REPAIR	Deal with any faults displayed by the diagnostic tool. Clear the computer memory. Carry out a road test followed by another check with the **diagnostic tool**.

GETtheMANUALS.org

DF269 PRESENT OR STORED	INJECTOR NO. 5 DEF: Injector mechanical fault

NOTES	**Priority when dealing with a number of faults:** Deal with all other faults first if they are present or stored.
	Conditions for applying the fault finding procedure to stored faults: The fault is considered present if: – vehicle speed is zero, – engine speed is less than **850 rpm**, – the engine coolant temperature is greater than **70˚C**, – fault detection time is **10 seconds**.
	Special notes: Use bornier **Elé. 1681** for all operations on the engine management computer connectors.

Engine stopped, disconnect the connector from injector 5.
Measure the **resistance** of the coil for injector 5 between **tracks 1** and **2** of the injector connector. Replace the injector if it is in **short circuit (R = 0 Ω)** or in **open circuit (resistance measurement = infinity).** Otherwise, **reconnect injector no. 5**. If **the fault is still present**, apply **test 10 Poor injector operation**.
Clear the fault memory and start the engine. **If the fault is still present**, contact the Techline.

AFTER REPAIR	Deal with any faults displayed by the diagnostic tool. Clear the computer memory. Carry out a road test followed by another check with the **diagnostic tool**.

GETtheMANUALS.org

DF270 PRESENT OR STORED	INJECTOR NO. 6 DEF: Injector mechanical fault

NOTES	**Priority when dealing with a number of faults:** Deal with all other faults first if they are present or stored.
	Conditions for applying the fault finding procedure to stored faults: The fault is considered present if: – vehicle speed is zero, – engine speed is less than **850 rpm**, – the engine coolant temperature is greater than **70˚C**, – fault detection time is **10 seconds**.
	Special notes: Use bornier **Elé. 1681** for all operations on the engine management computer connectors.

With the engine stopped, disconnect the connector from injector ?6?.
Measure the **resistance** of the coil for injector 6 between **tracks 1** and **2** of the injector connector. Replace the injector if it is in **short circuit (R = 0 Ω)** or in **open circuit (resistance measurement = infinity).** Otherwise, **reconnect injector no. 6**. If **the fault is still present**, apply **test 10 Poor injector operation**.
Clear the fault memory and start the engine. **If the fault is still present**, contact the Techline.

AFTER REPAIR	Deal with any faults displayed by the diagnostic tool. Clear the computer memory. Carry out a road test followed by another check with the **diagnostic tool**.

GETtheMANUALS.org

DF324 PRESENT OR STORED	OBD AIR TEMPERATURE SENSOR CIRCUIT CC.1: Short circuit to + 12 V CO.0: Open circuit or short circuit to earth

NOTES	**Special notes:** Use bornier **Elé. 1681** for all operations on the engine management computer connectors. **Does not involve the air inlet temperature sensor.** **ONLY FOR VDIAG 08 AND 0C**

CC.1	***NOTES***	**Conditions for applying the fault finding procedure to stored faults:** The fault is declared present if the sensor voltage is greater than **4.9 V**.

Manipulate the wiring harness between the diesel computer and the OBD air temperature sensor to detect a change of status (present ´ stored).
Look for possible damage to the harness, and check the **connection** and **the condition** of the OBD air temperature sensor and its connections.
Repair if necessary.

Check for **the continuity, the absence of interference resistance and insulation against + 5 V and + 12 V** on the following connections:

Diesel computer **track B 109** ⟶ **track 1** of the OBD air temperature sensor

If the fault is still present, check **the connection** and **condition** of **intermediate connector R115**.
Repair if necessary.

Measure the **resistance** between **tracks 1** and **3** of the OBD air temperature sensor.
Replace the sensor if the **resistance** is not:
5516 ± 400 Ω at 0˚C
3728 ± 300 Ω at 10˚C
2515 ± 200 Ω at 20˚C

If the fault is still present, apply **test 5 Air flowmeter**.
Repair if necessary.
If the fault is still present, apply **test 4 Checking the turbocharging and air inlet circuit**.
Repair if necessary.
If the fault is still present, contact the Techline.

AFTER REPAIR	Deal with any faults displayed by the diagnostic tool. Clear the computer memory. Carry out a road test followed by another check with the **diagnostic tool**.

GETtheMANUALS.org

DF324 **CONTINUED**	

CO.0	***NOTES***	**Conditions for applying the fault finding procedure to stored faults:** The fault is declared present if the sensor voltage is less than **0.12 V**.

Manipulate the wiring harness between the diesel computer and the OBD air temperature sensor to detect a change of status (present ↔ stored).
Look for possible damage to the harness, and check **the connection and the condition** of the OBD air temperature sensor and its connections.
Repair if necessary.

Check the **insulation against earth, continuity and the absence of interference resistance** on the following connection:

Diesel computer **track B 109** ⟶ **track 1** of the OBD air temperature sensor

If the fault is still present, check **the connection** and **condition** of **intermediate connector R115**.
Repair if necessary.

Check the **continuity and lack of interference resistance** of the connection:

Diesel computer **track A 11** ⟶ **track 3** of the OBD air temperature sensor

Repair if necessary.

Measure the **resistance** between **tracks 1** and **3** of the OBD air temperature sensor.
Replace the sensor if the **resistance** is not:
5516 ± 400 Ω at 0˚C
3728 ± 300 Ω at 10˚C
2515 ± 200 Ω at 20˚C

If the fault is still present, contact the Techline.

AFTER REPAIR	Deal with any faults displayed by the diagnostic tool. Clear the computer memory. Carry out a road test followed by another check with the **diagnostic tool**.

GETtheMANUALS.org

DF325 PRESENT OR STORED	EXHAUST GAS RECIRCULATION FUNCTION CC.1: Short circuit to + 12 V CO.0: Open circuit or short circuit to earth 1.DEF: Excessive EGR valve flow 2.DEF: Insufficient EGR valve flow 3.DEF: EGR valve position feedback loop error

NOTES	**Special notes:** Use bornier **Elé. 1681** for all operations on the engine management computer connectors.

CC.1	***NOTES***	**Conditions for applying the fault finding procedure to stored faults:** The fault is considered present if: – inconsistency with the EGR valve control voltage when it is operated, – the battery voltage is too low.

Manipulate the wiring harness between the diesel computer and the EGR valve to detect a change in status (present ⇔ stored).
Look for possible damage to the harness, and check **the connections and condition** of the EGR valve and its connections.
Repair if necessary.

Check the **insulation from + 5V and +12 V, continuity and absence of interference resistance** on the following connection:

Diesel computer **track B 115** ⟶ **track 4** of the EGR valve

Diesel computer **track B 87** ⟶ **track 2** of the EGR valve

Repair if necessary.

Measure the **resistance** of the EGR valve between **tracks 4** and **5**.
Replace the EGR valve if the resistance is not **6.8 ± 0.5 Ω at 20˚C**.
Measure the **resistance** of the EGR valve between **tracks 2** and **3**.
Replace the EGR valve if the resistance is not **5 ± 0.5 kΩ at 20˚C**.
(see **MR 353, MR 402 Mechanical, 12A, Fuel mixture, Exhaust gas recirculation valve**).

If the fault is still present, contact the Techline.

AFTER REPAIR	Deal with any faults displayed by the diagnostic tool. Clear the computer memory. Carry out a road test followed by another check with the **diagnostic tool**.

GETtheMANUALS.org

DF325 **CONTINUED 1**	

CO.0	***NOTES***	**Conditions for applying the fault finding procedure to stored faults:** The fault is considered present if: – with the engine running, – the battery voltage is too low.

Manipulate the wiring harness between the diesel computer and the EGR valve to detect a change in status (present ↔ stored).
Look for possible damage to the harness, and check **the connections and condition** of the EGR valve and its connections.
Repair if necessary.

Check the **insulation against earth, continuity and the absence of interference resistance** on the following connection:

Diesel computer **track B 115** ⟶ **track 4** of the EGR valve

Repair if necessary.

Measure the **resistance** of the EGR valve between **tracks 4** and **5**.
Replace the EGR valve if the resistance is not **6.8 ± 0.5 Ω at 20˚C**.
Measure the **resistance** of the EGR valve between **tracks 2** and **3**.
Replace the EGR valve if the resistance is not **5 ± 0.5 kΩ at 20˚C**.
(see **MR 353, MR 402 Mechanical, 12A, Fuel mixture, Exhaust gas recirculation valve**).

Check the **continuity and absence of interference resistance** of the connections::

Main relay **track 13** ⟶ **track 5** of the EGR valve

Diesel computer **tracks A 1** and **A 2** ⟶ **track 5** of the EGR valve

Ensure the presence of **+ 12 V** on **track A 1**
If the fault is still present, check **intermediate connector R 115** on **track 2**.
Repair if necessary.

If the fault is still present, contact the Techline.

AFTER REPAIR	Deal with any faults displayed by the diagnostic tool. Clear the computer memory. Carry out a road test followed by another check with the **diagnostic tool**.

GETtheMANUALS.org

DF325 **CONTINUED 2**	

1.DEF ***2.DEF***	***NOTES***	**Conditions for applying the fault finding procedure to stored faults:** The fault is declared present: – speed loop error less than **150 rpm**. – vehicle speed between **27 mph (45 km/h)** and **33 mph (55 km/h)**. – detection time **11 seconds**. – air intake temperature between **20** and **75˚C**, – if **1.DEF**: The difference between the EGR valve opening cyclic ratio and the EGR opening cyclic ratio setpoint is **greater than 20%**. – if **2.DEF**: The difference between the EGR valve opening cyclic ratio and the EGR valve opening cyclic ratio setpoint is **less than 29%**.
3.DEF		**Conditions for applying the fault finding procedure to stored faults:** The fault is declared present: – with the engine running, – engine speed greater than **1700 rpm**, – detection time **11 seconds**. – engine coolant temperature between **70** and **100˚C**, – the recorded value of the EGR valve position and the estimated value of the EGR valve position is greater than **1 mm**, – the estimated value of the EGR valve position and the recorded value of the EGR valve position is greater than **4 mm**.

Manipulate the wiring harness between the diesel computer and the EGR valve to detect a change in status (present ↔ stored).
Look for possible damage to the harness, and check **the connections and condition** of the EGR valve and its connections.
Repair if necessary.

AFTER REPAIR	Deal with any faults displayed by the diagnostic tool. Clear the computer memory. Carry out a road test followed by another check with the **diagnostic tool**.

GETtheMANUALS.org

DF325 **CONTINUED 3**	

Check that the EGR valve inlet duct and the inlet tracts on the manifold are not damaged (cracked manifold, pierced hoses), blocked or pinched. Check the extent of clogging of the EGR valve. Repair if necessary.
Clear the fault memory and start the engine. Repeat fault finding with the diagnostic tool. If the fault reappears, replace the EGR valve (see **MR 353, MR 402 or MR 361 Mechanical, 12A, Fuel mixture, Inlet manifold**).
If the fault is still present, contact the Techline.

AFTER REPAIR	Deal with any faults displayed by the diagnostic tool. Clear the computer memory. Carry out a road test followed by another check with the **diagnostic tool**.

GETtheMANUALS.org

DF374 PRESENT OR STORED	COMPUTER 1.DEF: Memory self-test

NOTES	**Conditions for applying the fault finding procedure to stored faults:** The fault is declared present if the computer detects an internal electrical malfunction.
	Special notes: Use bornier **Elé. 1621** for all operations on the engine management computer connectors.

If the fault is **stored** or **present**, clear the fault from the computer memory.
Switch off the ignition, wait **40 s**, then switch the ignition on again and re-establish dialogue.

If the fault is still present, contact the Techline.

AFTER REPAIR	Deal with any faults displayed by the diagnostic tool. Clear the computer memory. Carry out a road test followed by another check with the **diagnostic tool**.

GETtheMANUALS.org

DF767 PRESENT OR STORED	POWER UNIT 1.DEF: Loss of EDU power supply, injector control line CC.0 or CC.1

NOTES	**Conditions for applying the fault finding procedure to stored faults:** The fault is considered present if: – the engine speed is greater than **500 rpm**, – the battery voltage is greater than **11 V**, – the Power Unit loses its power supply, – or its injector control lines are short circuited to **earth** or to **+12 V**.
	Special notes: Use bornier **Elé. 1681** for all operations on the engine management computer connectors.

Manipulate the wiring harness between the diesel computer and the Power Unit* to detect a change in status (present ↔ stored).
Look for possible damage to the harness, and check **the condition and connection** of the Power Unit and its connections.
Repair if necessary.

Check the **insulation from earth, continuity and the absence of interference resistance** on the following connections:

Diesel computer **track A 46** → **track 3** of the Power Unit
Diesel computer **track A 65** → **track 4** of the Power Unit
Diesel computer **track A 45** → **track 5** of the Power Unit
Diesel computer **track A 64** → **track 6** of the Power Unit
Diesel computer **track A 44** → **track 7** of the Power Unit
Diesel computer **track A 63** → **track 8** of the Power Unit

Repair if necessary.

AFTER REPAIR	Deal with any faults displayed by the diagnostic tool. Clear the computer memory. Carry out a road test followed by another check with the **diagnostic tool**.

GETtheMANUALS.org

DF767 **CONTINUED**	

Check the **supply** of power to the Power Unit terminals. With the ignition on, check for **+ 12 V** on **track A 1** in contact and **track 1** of the Power Unit. Repair if necessary.
Check the **continuity, insulation from + 12 V and the absence of interference resistance** for the following connection: Diesel computer **track A 66** ⟶ **track 2** of the Power Unit Repair if necessary.
If the fault is still present, replace the Power Unit (see **MR 353, MR 402 or MR 361 Mechanical, 13B, Diesel injection, Power computer**).
Clear the fault memory and start the engine. **If the fault is still present**, contact the Techline.

AFTER REPAIR	Deal with any faults displayed by the diagnostic tool. Clear the computer memory. Carry out a road test followed by another check with the **diagnostic tool**.

GETtheMANUALS.org

DF768 PRESENT OR STORED	POWER UNIT 1.DEF: The diesel computer detects low power consumption by the Power Unit

NOTES	**Conditions for applying the fault finding procedure to stored faults:** The fault is declared present: – if the diesel computer detects a low power consumption by the Power Unit, – at engine speeds above **500 rpm**, – If the battery voltage is greater than **11 V**; **Special notes:** Use bornier **Elé. 1681** for all operations on the engine management computer connectors.

Manipulate the wiring harness between the diesel computer and the Power Unit to detect a change in status (present ↔ stored).
Look for possible damage to the harness, and check **the condition and connection** of the Power Unit connector and its connections.
Repair if necessary.

Check the **insulation and continuity** of the following connections:

Power Unit **track 1**	→	**track 4** of injectors no. 1 to 6
Power unit **track 7**	→	**track 3** of injectors no. 1
Power unit **track 6**	→	**track 3** of injectors no. 2
Power unit **track 5**	→	**track 3** of injectors no. 3
Power unit **track 4**	→	**track 3** of injectors no. 4
Power unit **track 3**	→	**track 3** of injectors no. 5
Power unit **track 2**	→	**track 3** of injectors no. 6

Power Unit = Injector control unit.
Repair if necessary.
If the connections are correct and the fault is still present, replace the Power Unit (see **MR 353, MR 402 or MR 361 Mechanical, 13B, Diesel injection, Power computer**).

Clear the fault memory and start the engine.
If the fault is still present, contact the Techline.

AFTER REPAIR	Deal with any faults displayed by the diagnostic tool. Clear the computer memory. Carry out a road test followed by another check with the **diagnostic tool**.

GETtheMANUALS.org

DF769 PRESENT OR STORED	OIL TEMPERATURE 1.DEF: Above maximum threshold

NOTES	**Conditions for applying the fault finding procedure to stored faults:** The fault is declared present if the temperature is greater than **123˚C**.
	Special notes: Use bornier **Elé. 1681** for all operations on the engine management computer connectors.

Manipulate the wiring harness between the diesel computer and the oil temperature sensor to detect a change of status (present ⇔ stored).
Look for possible damage to the harness, and check **the connection and the condition** of the oil temperature sensor and its connections.
Repair if necessary.

Measure the **resistance** between tracks **1** and **2** of the oil temperature sensor.
Replace the sensor if the **resistance** is not:
16100 ± 400 Ω at - 10˚C
9200 ± 300 Ω at 0˚C
3515 ± 200 Ω at 20˚C
1500 ± 100 Ω at 40˚C

If the fault is still present, check the engine cooling circuit (see **MR 353, MR 402 or MR 361 Mechanical, 19A, Cooling, Checks**).
Repair or replace the faulty components, if necessary.

If the fault is still present, contact the Techline.

GETtheMANUALS.org

NOTES	Only check conformity after a full check with the **diagnostic tool**. The values shown in this conformity check are given as a guide. **Test conditions: engine stopped, ignition on.**

MAIN SCREEN

Order	Function	Parameter or Status Check or Action	Display and notes	Fault finding
1	**Impact detected**	**ET077:** Impact detected	**NO**	If **YES**, switch off the ignition for **40 seconds**, then switch it back on so the engine can be restarted. Then clear any faults.
2	**Engine speed**	**PR145:** Engine speed	**Gives the engine's rotational speed in rpm. 0 rpm**	In the event of a fault apply the interpretation for **DF154 Flywheel signal sensor circuit**.
3	**Vehicle speed**	**PR155:** Vehicle speed	**Gives the vehicle speed in mph (km/h). 0 mph**	**Perform a fault finding procedure on the ABS computer.**
4	**Main relay**	**ET133:** Main relay control	**ACTIVE**	In the event of a fault, apply the interpretation of **DF015 Main relay control circuit**.
5	**Connection**	**ET226:** Injection/ multiplex network connection	**VALID**	In the event of a fault, test the multiplex network. Clear the faults.
6	**Computer feed voltage**	**PR071:** Computer feed voltage	**11 V < PR071 < 15 V**	In the event of a fault, apply the interpretation of fault **DF175 Supply**.
7	**Sensor supply voltages**	**PR215:** Sensor feed voltage no. 1	**4.9 V ± 0.1 V**	If only one gang responds after the pedal is depressed, change the pedal sensor. If the voltages measured do not correspond to ± **0.5 V**, replace the pedal sensor.

GETtheMANUALS.org

NOTES	Only check conformity after a full check with the **diagnostic tool**. The values shown in this conformity check are given as a guide. **Test conditions: engine stopped, ignition on.**

MAIN SCREEN (continued 1)

Order	Function	Parameter or Status Check or Action		Display and notes	Fault finding
8	**Pressure**	**PR035:**	Atmospheric pressure	**Gives the atmospheric pressure in mbar.**	In the event of a fault, apply the interpretation for **DF003 Atmospheric pressure sensor circuit**.
9		**PR038:**	Rail pressure	**0 bar**	In the event of a fault, apply interpretation of fault **DF208 Fuel pressure solenoid valve circuit**.
10	**Temperature**	**PR058:**	Air temperature	Check the values displayed by the sensors by referring to the "Glossary". **PR058 ≈ PR064 ≈ PR066 with engine cold**	In the event of a fault, apply the interpretation of faults **DF039 Air inlet temperature sensor circuit** (Vdiag 04, 08 only) **and DF324 OBD air temperature sensor circuit** (Vdiag 0C only).
11		**PR064:**	Coolant temperature		If there is a fault use the interpretation for **DF001 Coolant temperature sensor circuit**.
12		**PR066:**	Oil temperature (Vdiag OC only)		**In the event of a fault, apply the interpretation of the DF769 "Oil temperature"** (Vdiag 0C only).

GETtheMANUALS.org

NOTES	Only check conformity after a full check with the **diagnostic tool**. The values shown in this conformity check are given as a guide. **Test conditions: engine stopped, ignition on.**

MAIN SCREEN (continued 2)

Order	Function	Parameter or Status Check or Action	Display and notes	Fault finding
13	**Injection fault**	**ET028:** Level 1 fault warning light request	**INACTIVE** **Warning light controlled by the engine injection computer: Allocated via the multiplex network.**	In the event of a fault with the interpretation of statuses **ET028 Injection fault warning light request**, and/or **ET029 Serious injection fault warning light request**, ensure no faults are present. If the fault is still present run fault finding on the instrument panel.
14		**ET029:** Level 2 fault warning light request		
15	**OBD fault**	**ET148:** OBD warning light activation request	**INACTIVE** **Warning light controlled by the engine injection computer: Allocated via the multiplex network.**	In the event of a fault with the interpretation of status **ET148 OBD warning light activation request** ensure no faults are present. If the fault is still present run fault finding on the instrument panel.

GETtheMANUALS.org

NOTES	Only check conformity after a full check with the **diagnostic tool**. The values shown in this conformity check are given as a guide. **Test conditions: engine stopped, ignition on.**

AIR CIRCUIT (TURBO/INLET)

Order	Function	Parameter or Status Check or Action		Display and notes	Fault finding
1	**Engine speed**	**PR145:**	Engine speed	**Gives the engine's rotational speed in rpm. 0 rpm**	In the event of a fault apply the interpretation for **DF154 Flywheel signal sensor circuit**.
2	**Air temperature**	**PR058:**	Air temperature	**- 40 ˚C < X < 120 ˚C**	In the event of a fault, apply the interpretation of faults **DF039 Air inlet temperature sensor circuit** (Vdiag 04, 08 only) **and DF324 OBD air temperature sensor circuit** (Vdiag 0C only).
3	**Pressure**	**PR035:**	Atmospheric pressure	**990 < X < 1030 mbar**	In the event of a fault, apply the interpretation for **DF003 Atmospheric pressure sensor circuit**.
4		**PR041:**	Turbocharging pressure	**PR041 = PR035**	In the event of a fault, apply the interpretation of **DF055 Turbocharging pressure regulation circuit**.
5	**Turbocharger**	**PR346:**	Turbocharger wastegate valve position	**1.64 ± 0.1 mm**	
6	**Pressure**	**PR008:**	Rail pressure setpoint	**PR008 = 400 bar PR038 = 0 bar PR213 = PR038 - PR008**	In the event of a fault, apply the interpretation of **DF208 "Fuel pressure solenoid valve circuit", or "DF197 Fuel pressure signal"**.
7		**PR038:**	Rail pressure		
8		**PR213:**	Rail pressure loop difference		
9	**Air flow**	**PR146:**	Inlet air flow	**0 kg per hour**	In the event of a fault, apply the interpretation of **DF056 Air flow sensor circuit**.

GETtheMANUALS.org

NOTES	Only check conformity after a full check with the **diagnostic tool**. The values shown in this conformity check are given as a guide. **Test conditions: engine stopped, ignition on.**

AIR CIRCUIT (TURBO/INLET) (CONTINUED)

Order	Function	Parameter or Status Check or Action		Display and notes	Fault finding
10	**Sensor voltage**	**PR083:**	Air temperature sensor voltage	**2.9 ± 0.1 V at 20 ˚C**	In the event of a fault, apply the interpretation of faults **DF039 Air inlet temperature sensor circuit** (Vdiag 04, 08 only) **and DF324 OBD air temperature sensor circuit** (Vdiag 0C only).
11		**PR079:**	Atmospheric pressure sensor voltage	**4 ± 0.1 V at 20 ˚C**	In the event of a fault, apply the interpretation for **DF003 Atmospheric pressure sensor circuit**.
12		**PR215:**	Sensor feed voltage no. 1	**4.9 ± 0.1 V at 20 ˚C**	If only one gang responds after the pedal is depressed, change the pedal sensor. If the voltages measured do not correspond to ± **0.5 V**, replace the pedal sensor.
13		**PR224:**	Turbocharging pressure sensor voltage	**1.95 ± 0.05 V at 20 ˚C**	In the event of a fault, apply the interpretation of **DF055 Turbocharging pressure regulation circuit**.
14		**PR345:**	Turbocharger wastegate potentiometer voltage	**3.9 ± 0.1 V at 20 ˚C**	
15		**PR225:**	Air flow sensor voltage	**0.9 ± 0.1 V at 20 ˚C**	In the event of a fault, apply the interpretation of **DF056 Air flow sensor circuit**.

GETtheMANUALS.org

NOTES	Only check conformity after a full check with the **diagnostic tool**. The values shown in this conformity check are given as a guide. **Test conditions: engine stopped, ignition on.**

FUEL CIRCUIT

Order	Function	Parameter or Status Check or Action		Display and notes	Fault finding
1	**Engine speed**	**PR145:**	Engine speed	**Gives the engine's rotational speed in rpm. 0 rpm**	In the event of a fault apply the interpretation for **DF154 Flywheel signal sensor circuit**.
2	**Fuel temperature**	**PR063:**	Fuel temperature	**- 40 ˚C < X < 120 ˚C**	In the event of a fault, apply the interpretation of **DF098 Fuel temperature sensor circuit**.
3	**Pressure**	**PR008:**	Rail pressure setpoint	**400 bar**	In the event of a fault, apply the interpretation of **DF208 "Fuel pressure solenoid valve circuit", or "DF197 Fuel pressure signal"**.
4		**PR038:**	Rail pressure	**0 bar**	
5		**PR213:**	Rail pressure loop difference	**PR213 = PR008 - PR213**	
6	**Turbocharger**	**PR346:**	Turbocharger wastegate valve position	**1.64 ± 0.1 mm**	In the event of a fault, apply the interpretation of **DF055 Turbocharging pressure regulation circuit**.
7	**Fuel flow**	**PR017:**	Fuel flow	**- 30 mm^3/stroke**	In the event of a fault, apply the interpretation of **DF197 Fuel pressure signal**.
8	**Duration of injection**	**PR101:**	Duration of injection	**0 ms**	
9	**Sensor voltage**	**PR082:**	Fuel temperature sensor voltage	**3.9 ± 0.1 V at 20 ˚C**	In the event of a fault, apply the interpretation of **DF098 Fuel temperature sensor circuit**.
10		**PR223:**	Fuel pressure sensor voltage	**0.5 V < X < 1.5 V**	In the event of a fault, apply the interpretation of **DF208 Fuel pressure signal** and **DF197 Fuel pressure solenoid valve circuit**.

GETtheMANUALS.org

NOTES	Only check conformity after a full check with the **diagnostic tool**. The values shown in this conformity check are given as a guide. **Test conditions: engine stopped, ignition on.**

FUEL CIRCUIT (continued)

Order	Function	Parameter or Status Check or Action		Display and notes	Fault finding
11	**Turbocharger potentiometer voltage**	**PR345:**	Turbocharger wastegate potentiometer voltage	**3.9 ± 0.1 V at 20 ˚C**	In the event of a fault, apply the interpretation of **DF055 Turbocharging pressure regulation circuit**.
12	**Fuel flow correction** (except for VELSATIS Vdiag 04)	**PR364:**	Cylinder no. 1 fuel flow correction	**± 1 mm^3/stroke**	If inconsistency, perform a check using **test 10 INCORRECT INJECTOR OPERATION**.
13		**PR405:**	Cylinder no. 2 fuel flow correction		
14		**PR406:**	Cylinder no. 3 fuel flow correction		
15		**PR365:**	Cylinder no. 4 fuel flow correction		
16		**PR407:**	Cylinder no. 5 fuel flow correction		
17		**PR408:**	Cylinder no. 6 fuel flow correction		

GETtheMANUALS.org

NOTES	Only check conformity after a full check with the **diagnostic tool**. The values shown in this conformity check are given as a guide. **Test conditions: engine stopped, ignition on.**

ANTI POLLUTION/OBD

Order	Function	Parameter or Status Check or Action		Display and notes	Fault finding
1	**Engine speed**	**PR145:**	Engine speed	**Gives the engine's rotational speed in rpm. 0 rpm**	In the event of a fault apply the interpretation for **DF154 Flywheel signal sensor circuit**.
2	**EGR valve**	**PR136:**	EGR position	**0 ± 0.1 mm**	In the event of a fault, apply the interpretation of **DF209 EGR valve position sensor circuit**.
3		**PR160:**	EGR potentiometer voltage	**PR160 = 4 ± 0.1 V at PR136 = 0 ± 0.1 mm**	
4	**Air flow**	**PR146:**	Inlet air flow	**0 kg per hour**	In the event of a fault, apply the interpretation of **DF056 Air flow sensor circuit**.
5		**PR225:**	Air flow sensor voltage	**0.9 ± 0.1 V at 20 °C**	
6	**Combustion misfiring** (except for VELSATIS Vdiag 04)	**ET057:**	Misfiring on cylinder 1	**NOT DETECTED**	If inconsistency, perform a check using **test 10 INCORRECT INJECTOR OPERATION**. **IMPORTANT** To reinitialise this status, use **RZ007 Fault memory**.
7		**ET058:**	Misfiring on cylinder 2		
8		**ET059:**	Misfiring on cylinder 3		
9		**ET060:**	Misfiring on cylinder 4		
10		**ET061:**	Misfires in cylinder 5		
11		**ET062:**	Misfires in cylinder 6		
12	**OBD fault**	**ET148:**	OBD warning light activation request	**INACTIVE Warning light controlled by the engine injection computer: Allocated via the multiplex network.**	In the event of a fault with the interpretation of status **ET148 OBD warning light activation request** ensure no faults are present. If the fault is still present run fault finding on the instrument panel.

GETtheMANUALS.org

NOTES	Only check conformity after a full check with the **diagnostic tool**. The values shown in this conformity check are given as a guide. **Test conditions: engine stopped, ignition on.**

DRIVER PARAMETERS

Order	Function	Parameter or Status Check or Action		Display and notes	Fault finding
1	**Engine speed**	**PR145:**	Engine speed	**Gives the engine's rotational speed in rpm. 0 rpm**	In the event of a fault apply the interpretation for **DF154 Flywheel signal sensor circuit**.
2	**Accelerator pedal**	**PR030:**	Accelerator pedal position	**0 %**	If only one gang responds after the pedal is depressed, change the pedal sensor. If the voltages measured do not correspond to ± **0.5 V**, replace the pedal sensor.
3		**PR147:**	Pedal potentiometer voltage gang 1	**No load: PR147 = 0.7 ± 0.1 V Full load: PR147 = 4.5 ± 0.1 V**	
4		**PR148:**	Pedal potentiometer voltage gang 2	**No load: PR148 = 0.35 ± 0.1 V Full load: PR148 = 2.2 ± 0.1 V**	
5		**PR342:**	Pedal sensor power supply gang 1	**4.9 ± 0.1 V**	
6	**Voltage**	**PR215:**	Sensor feed voltage no. 1	**4.9 ± 0.1 V**	
7	**Brake pedal**	**ET012:**	Primary brake contact	**RELEASED**	In the event of a fault, refer to the interpretation of status **ET012** Primary brake contact
8		**ET013:**	Secondary brake contact	**RELEASED**	In the event of a fault, refer to the interpretation of status **ET013** Secondary brake contact

GETtheMANUALS.org

NOTES	Only check conformity after a full check with the **diagnostic tool**. The values shown in this conformity check are given as a guide. **Test conditions: engine stopped, ignition on.**

IGNITION/PREHEATING

Order	Function	Parameter or Status Check or Action		Display and notes	Fault finding
1	**Engine**	**ET038:**	Engine (except for VELSATIS Vdiag 04)	**NORMAL**	If status **ET038** is **STATUS 1**, carry out a conformity check using the **Emission control/ OBD** function.
2	**Engine speed**	**PR145:**	Engine speed	**Gives the engine's rotational speed in rpm.** **0 rpm**	In the event of a fault apply the interpretation for **DF154 Flywheel signal sensor circuit**.
3	**Temperature**	**PR064:**	Coolant temperature	Check the values displayed by the sensors by referring to the "Glossary" section. **PR064 = PR058**	If there is a fault use the interpretation for **DF001 Coolant temperature sensor circuit**.
4		**PR058:**	Air temperature		In the event of a fault, apply the interpretation of faults **DF039 Air inlet temperature sensor circuit** (Vdiag 04, 08 only) **and DF324 OBD air temperature sensor circuit** (Vdiag 0C only).
5	**Preheating**	**PR176:**	Preheating phase	**0 < X < 30 s**	In the event of a fault, refer to the interpretation of **ET134 Pre/postheating relay control**.
6		**ET134:**	Pre-postheating relay control	**ACTIVE** during the preheating phase, then **INACTIVE**	
7		**ET204:**	Control for preheating warning light	**ACTIVE** during the preheating phase, then **INACTIVE**	If there is a fault, consult the interpretation of status **ET204 Preheating warning light control**.
8	**Computer feed voltage**	**PR071:**	Computer feed voltage	**11 V < X < 15 V**	In the event of a fault, apply the interpretation of fault **DF175 Supply**.

GETtheMANUALS.org

NOTES	Only check conformity after a full check with the **diagnostic tool**. The values shown in this conformity check are given as a guide. **Test conditions: engine stopped, ignition on.**

ENGINE COOLING

Order	Function	Parameter or Status Check or Action		Display and notes	Fault finding
1	**Temperature**	**PR058:**	Air temperature	Check the values displayed by the sensors by referring to the "Glossary". **PR058 ≈ PR064 ≈ PR066 ≈ PR063 with engine cold**	In the event of a fault, apply the interpretation of faults **DF039 Air inlet temperature sensor circuit** (Vdiag 04, 08 only) **and DF324 OBD air temperature sensor circuit** (Vdiag 0C only).
2		**PR064:**	Coolant temperature		If there is a fault use the interpretation for **DF001 Coolant temperature sensor circuit**.
3		**PR066:**	Oil temperature		In the event of a fault, apply the interpretation of the **DF769 Oil temperature** (Vdiag 0C only).
4		**PR063:**	Fuel temperature		In the event of a fault, apply the interpretation of **DF098 Fuel temperature sensor circuit**.
5	**Antipercolation device**	**ET273:**	Anti-percolation	**INACTIVE**	In the event of a fault, refer to the interpretation of status **ET273** Anti-percolation
6	**Motor-driven fan assembly**	**ET143:**	Low speed fan assembly relay control	**INACTIVE without air conditioning and PR064 < 96 ˚C**	In the event of a fault, refer to the interpretation of **ET143 Low speed fan relay control**.
7		**ET144:**	High-speed fan assembly relay control	**INACTIVE and PR064 < 99 ˚C**	In the event of a fault, refer to the interpretation of **ET144 High speed fan relay control**.

GETtheMANUALS.org

NOTES	Only check conformity after a full check with the **diagnostic tool**. The values shown in this conformity check are given as a guide. **Test conditions: engine stopped, ignition on.**

ENGINE COOLING (CONTINUED)

Order	Function	Parameter or Status Check or Action		Display and notes	Fault finding
8	**Sensor voltage**	**PR083:**	Air temperature sensor voltage	Check the values displayed by the sensors by referring to the "Glossary". **PR083 ≈ PR084 ≈ PR085 ≈ PR082 ≈ 3.5 ± 0.5 V at 20 ˚C**	In the event of a fault, apply the interpretation of faults **DF039 Air inlet temperature sensor circuit** (Vdiag 04, 08 only) **and DF324 OBD air temperature sensor circuit** (Vdiag 0C only).
9		**PR084:**	Coolant temperature sensor voltage		If there is a fault use the interpretation for **DF001 Coolant temperature sensor circuit**.
10		**PR085:**	Oil temperature sensor voltage		In the event of a fault, apply the interpretation of **DF058 Oil temperature sensor circuit** (Vdiag 0C only).
11		**PR082:**	Fuel temperature sensor voltage		In the event of a fault, apply the interpretation of **DF098 Fuel temperature sensor circuit**.
12	**Coolant temperature warning light**	**ET027:**	Coolant temperature warning light request	**INACTIVE**	**In the event of a fault with interpretation of ET027 "Coolant temperature warning light request",** run fault finding on the instrument panel.

GETtheMANUALS.org

NOTES	Only check conformity after a full check with the **diagnostic tool**. The values shown in this conformity check are given as a guide. **Test conditions: engine stopped, ignition on.**

HEATING

Order	Function	Parameter or Status Check or Action		Display and notes	Fault finding
1	**Coolant temperature**	**PR064:**	Coolant temperature	**- 40 ˚C < X < 120 ˚C**	If there is a fault use the interpretation for **DF001 Coolant temperature sensor circuit**.
2	**Heating element**	**ET276:**	Heating element	**WITH (depending on vehicle configuration)**	In the event of a fault, apply the interpretation of **ET276 Heating elements**.
3	**Sensor voltage**	**PR084:**	Coolant temperature sensor voltage	**3.95 ± 0.1 V at 20 ˚C**	If there is a fault use the interpretation for **DF001 Coolant temperature sensor circuit**.
4	**Heating element**	**ET205:**	Heating element no. 1 relay control	**INACTIVE at 20 ˚C**	In the event of a fault, apply the interpretation of **ET205 Heating element no. 1 relay control**.
5		**ET206:**	Heating element no. 2 relay control	**INACTIVE at 20 ˚C**	In the event of a fault, apply the interpretation of **ET206 Heating element no. 2 relay control**.
6		**ET207:**	Heating element no. 3 relay control	**INACTIVE at 20 ˚C**	In the event of a fault, apply the interpretation of **ET207 Heating element no. 3 relay control**.

GETtheMANUALS.org

NOTES	Only check conformity after a full check with the **diagnostic tool**. The values shown in this conformity check are given as a guide. **Test conditions: engine stopped, ignition on.**

CRUISE CONTROL/SPEED LIMITER

Order	Function	Parameter or Status Check or Action		Display and notes	Fault finding
1	**Vehicle speed**	**PR155:**	Vehicle speed	**Gives the vehicle speed in mph (km/h). 0 mph**	**Perform a fault finding procedure on the ABS computer.**
2	**Cruise control/ speed limiter**	**PR130:**	Cruise control setpoint	**0 mph**	In the event of a fault, apply the interpretation of **ET557 Deactivation by cruise control/speed limiter function**.
3		**ET042:**	Cruise control/ speed limiter	**INACTIVE LIMIT CRUISE**	If there is a fault, use the interpretation for **ET042 Cruise control/Speed limiter**.
4		**ET413:**	Cruise control/ speed limiter function	**INACTIVE SUSPEND RESUME MINUS PLUS INACTIVE**	In the event of a fault, apply the interpretation for **ET413 Cruise control/Speed limiter function**.
5		**PR178:**	Cruise control switch voltage (except VELSATIS Vdiag 04)	If **ET045** is **"INACTIVE", PR178 = 5 ± 0.1 V**. If **ET045** is **"PLUS", PR178 = 2.4 ± 0.1 V**. If **ET045** is **"MINUS", PR178 = 1.3 ± 0.1 V**. If **ET045** is **"SUSPEND", PR178 = 0.1 ± 0.1 V**. If **ET045** is **"RESUME", PR178 = 3.76 ± 0.1 V**.	

GETtheMANUALS.org

NOTES	Only check conformity after a full check with the **diagnostic tool**. The values shown in this conformity check are given as a guide. **Test conditions: engine stopped, ignition on.**

CRUISE CONTROL/SPEED LIMITER (CONTINUED)

Order	Function	Parameter or Status Check or Action	Display and notes	Fault finding
6	**Cruise control/ speed limiter**	**ET556:** Driver deactivation of the cruise control/speed limiter Note: the cruise control can only be activated at a speed of V > 18 mph (30 km/h	**STATUS 1:** Brake pedal depressed **STATUS 2:** Traction control request **STATUS 3:** Press on the Suspend button **STATUS 4:** Decoupling of engine/gearbox **STATUS 5:** Gear lever in neutral position **STATUS 6:** Inconsistency between the request and the vehicle speed	In the event of a fault, apply the interpretation of **ET556 Driver deactivation of the cruise control/speed limiter**. **IMPORTANT** Certain deactivations are stored; to reinitialise this status use **RZ007 Fault memory**
7		**ET557:** Cruise control/ speed limiter deactivation by function Note: the cruise control can only be activated at a speed of V > **18 mph (30 km/h)**	**STATUS 1:** Fault in cruise control or speed limiter **STATUS 2:** Fault detected by the injection computer **STATUS 3:** Vehicle speed not refreshed **STATUS 4:** Vehicle speed invalid	In the event of a fault, apply the interpretation of **ET557 Deactivation by cruise control/speed limiter function**. **IMPORTANT** Certain deactivations are stored; to reinitialise this status use **RZ007 Fault memory**
8	**Brake pedal**	**ET012:** Primary brake contact	**RELEASED**	In the event of a fault, refer to the interpretation of status **ET012** Primary brake contact
9		**ET013:** Secondary brake contact	**RELEASED**	In the event of a fault, refer to the interpretation of status **ET013** Secondary brake contact

GETtheMANUALS.org

NOTES	Only check conformity after a full check with the **diagnostic tool**. The values shown in this conformity check are given as a guide. **Test conditions: engine stopped, ignition on.**

STARTING

Order	Function	Parameter or Status Check or Action		Display and notes	Fault finding
1	**Engine**	**ET038:**	Engine (except for VELSATIS Vdiag 04)	**NORMAL**	If status **ET038** is **STATUS 1**, carry out a conformity check using the **Emission control/ OBD** function.
2	**Computer feed voltage**	**PR071:**	Computer feed voltage	**11 V < PR071 < 15 V**	In the event of a fault, apply the interpretation of fault **DF175 Supply**.
3	**Sensor voltage**	**PR215:**	Sensor feed voltage no. 1	**4.9 ± 0.1 V**	If only one gang responds after the pedal is depressed, change the pedal sensor. If the voltages measured do not correspond to ± **0.5 V**, replace the pedal sensor.

GETtheMANUALS.org

NOTES	Only check conformity after a full check with the **diagnostic tool**. The values shown in this conformity check are given as a guide. **Test conditions: engine stopped, ignition on.**

PROTECTION

Order	Function	Parameter or Status Check or Action	Display and notes	Fault finding
1	**Impact detected**	**ET077:** Impact detected	**NO**	If **YES**, switch off the ignition for **40 seconds**, then switch it back on so the engine can be restarted. Then clear any faults.
2	**Engine immobiliser**	**ET003:** Engine immobiliser	**INACTIVE**	In the event of a fault, run a multiplex network test using the diagnostic tool; then if the test is OK, test the UCH.
3		**ET341:** Immobiliser code programmed	**YES**	If **NO**, refer to interpretation of ET341.

GETtheMANUALS.org

NOTES	The values indicated in this conformity check are only given as examples. It is therefore essential to refer to the Technical Note which deals with your vehicle. **Test conditions:** engine warm, idling at **80 ˚C**.

MAIN SCREEN

Order	Function	Parameter or Status Check or Action	Display and notes	Fault finding
1	**Impact detected**	**ET077:** Impact detected	**NO**	If **YES**, switch off the ignition for **40 seconds**, then switch it back on so the engine can be restarted. Then clear any faults.
2	**Engine speed**	**PR145:** Engine speed	**Gives the engine's rotational speed in rpm. 700 ± 50 rpm**	In the event of a fault apply the interpretation for **DF154 Flywheel signal sensor circuit**.
3	**Vehicle speed**	**PR155:** Vehicle speed	**Gives the vehicle speed in mph (km/h). 0 mph**	**Perform a fault finding procedure on the ABS computer.**
4	**Main relay**	**ET133:** Main relay control	**ACTIVE**	In the event of a fault, apply the interpretation of **DF015 Main relay control circuit**.
5	**Connection**	**ET226:** Injection/ multiplex network connection	**VALID**	In the event of a fault, test the multiplex network. Clear the faults.
6	**Computer feed voltage**	**PR071:** Computer feed voltage	**11 V < PR071 < 15 V**	In the event of a fault, apply the interpretation of fault **DF175 Supply**.
7	**Sensor supply voltages**	**PR215:** Sensor feed voltage no. 1	**4.9 V ± 0.1 V**	If only one gang responds after the pedal is depressed, change the pedal sensor. If the voltages measured do not correspond to ± **0.5 V**, replace the pedal sensor.

GETtheMANUALS.org

NOTES	The values indicated in this conformity check are only given as examples. It is therefore essential to refer to the Technical Note which deals with your vehicle. **Test conditions:** engine warm, idling at **80 ˚C**.

MAIN SCREEN (continued 1)

Order	Function	Parameter or Status Check or Action	Display and notes	Fault finding
8	**Pressure**	**PR035:** Atmospheric pressure	**Gives the atmospheric pressure in mbar.**	In the event of a fault, apply the interpretation for **DF003 Atmospheric pressure sensor circuit**.
9		**PR038:** Rail pressure	**PR038 = PR008 ± 10 mbar**	In the event of a fault, apply interpretation of fault **DF208 Fuel pressure solenoid valve circuit**.
10	**Temperature**	**PR058:** Air temperature	Check the values displayed by the sensors by referring to the "Glossaries". **PR064 ≈ PR066 ≈ 80 ˚C ± 5 ˚C**	In the event of a fault, apply the interpretation of faults **DF039 Air inlet temperature sensor circuit** (Vdiag 04, 08 only) **and DF324 OBD air temperature sensor circuit** (Vdiag 0C only).
11		**PR064:** Coolant temperature		If there is a fault use the interpretation for **DF001 Coolant temperature sensor circuit**.
12		**PR066:** Oil temperature		**In the event of a fault, apply the interpretation of the DF769 "Oil temperature"** (Vdiag 0C only).

GETtheMANUALS.org

NOTES	The values indicated in this conformity check are only given as examples. It is therefore essential to refer to the Technical Note which deals with your vehicle. **Test conditions:** engine warm, idling at **80 ˚C**.

MAIN SCREEN (continued 2)

Order	Function	Parameter or Status Check or Action		Display and notes	Fault finding
13	**Injection fault**	**ET028:**	Level 1 fault warning light request	**INACTIVE Warning light controlled by the engine injection computer: "allocated via the multiplex network".**	In the event of a fault with the interpretation of statuses **ET028 "Injection fault warning light request"**, and/or **ET029 "Serious injection fault warning light request"**, ensure no faults are present. If the fault is still present run fault finding on the instrument panel.
14		**ET029:**	Level 2 fault warning light request		
15	**OBD fault**	**ET148:**	OBD warning light activation request	**INACTIVE Warning light controlled by the engine injection computer: "allocated via the multiplex network".**	In the event of a fault with the interpretation of status **ET148 OBD warning light activation request,** ensure no faults are present. If the fault is still present run fault finding on the instrument panel.

GETtheMANUALS.org

NOTES	The values indicated in this conformity check are only given as examples. It is therefore essential to refer to the Technical Note which deals with your vehicle. **Test conditions:** engine warm, idling at **80 ˚C**.

AIR CIRCUIT (TURBO/INLET)

Order	Function	Parameter or Status Check or Action	Display and notes	Fault finding
1	**Engine speed**	**PR145:** Engine speed	**Gives the engine's rotational speed in rpm. 700 ± 50 rpm**	In the event of a fault apply the interpretation for **DF154 Flywheel signal sensor circuit**.
2	**Air temperature**	**PR058:** Air temperature	**- 40 ˚C < X < 120 ˚C**	In the event of a fault, apply the interpretation of faults **DF039 Air inlet temperature sensor circuit** (Vdiag 04, 08 only) **and DF324 OBD air temperature sensor circuit** (Vdiag 0C only).
3	**Pressure**	**PR035:** Atmospheric pressure	**990 < X < 1030 mbar**	In the event of a fault, apply the interpretation for **DF003 Atmospheric pressure sensor circuit**.
4		**PR041:** Turbocharging pressure	**PR035 = PR041**	In the event of a fault, apply the interpretation of **DF055 Turbocharging pressure regulation circuit**.
5	**Turbocharger**	**PR346:** Turbocharger wastegate valve position	**10 ± 0.1 mm**	

GETtheMANUALS.org

NOTES	The values indicated in this conformity check are only given as examples. It is therefore essential to refer to the Technical Note which deals with your vehicle. **Test conditions:** engine warm, idling at **80 °C**.

AIR CIRCUIT (TURBO/INLET) (CONTINUED 1)

Order	Function	Parameter or Status Check or Action		Display and notes	Fault finding
6	**Pressure**	**PR008:**	Rail pressure setpoint	During operation, parameter **PR213** should not exceed a **40 bar** difference at a stabilised idle speed. **PR213 = PR008 - PR038 ≈ 0 bar**	In the event of a fault, apply the interpretation of **DF208 Fuel pressure solenoid valve circuit**, and/or **DF197 Fuel pressure signal**.
7		**PR038:**	Rail pressure		
8		**PR213:**	Rail pressure loop difference		
9	**Air flow**	**PR146:**	Inlet air flow	N = 700 rpm and EGR = 3.2 mm: **PR146 = 42 kg/h ± 4.2** N = 700 rpm and EGR = 0 mm: **PR146 = 72.3 kg/h ± 7.2 kg/h** (To obtain EGR = 0 mm, depress the accelerator pedal **briefly** and release the pedal while displaying the **PR136 "EGR valve position"** parameter in the diagnostic tool, then freeze the image when parameter **PR136 = 0 mm**).	In the event of a fault, apply the interpretation of **DF056 Air flow sensor circuit**.

GETtheMANUALS.org

NOTES	The values indicated in this conformity check are only given as examples. It is therefore essential to refer to the Technical Note which deals with your vehicle. **Test conditions:** engine warm, idling at **80 ˚C**.

AIR CIRCUIT (TURBO/INLET) (CONTINUED 2)

Order	Function	Parameter or Status Check or Action		Display and notes	Fault finding
10	**Sensor voltages**	**PR083:**	Air temperature sensor voltage	**3.3 ± 0.1 V at 80 ˚C**	In the event of a fault, apply the interpretation of faults **DF039 Air inlet temperature sensor circuit** (Vdiag 04, 08 only) **and DF324 OBD air temperature sensor circuit** (Vdiag 0C only).
11		**PR079:**	Atmospheric pressure sensor voltage	**3.9 ± 0.1 V at 80 ˚C**	In the event of a fault, apply the interpretation for **DF003 Atmospheric pressure sensor circuit**.
12		**PR215:**	Sensor feed voltage no. 1	**4.9 ± 0.1 V**	If only one gang responds after the pedal is depressed, change the pedal sensor. If the voltages measured do not correspond to ± **0.5 V**, replace the pedal sensor.
13		**PR224:**	Turbocharging pressure sensor voltage	**1.96 ± 0.1 V at 80 ˚C**	In the event of a fault, apply the interpretation of **DF055 Turbocharging pressure regulation circuit**.
14		**PR345:**	Turbocharger wastegate potentiometer voltage	**PR345 = 0.45 V for PR346 = 10 mm**	
15		**PR225:**	Air flow sensor voltage	**3.29 ± 0.1 V at 80 ˚C**	In the event of a fault, apply the interpretation of **DF056 Air flow sensor circuit**.

GETtheMANUALS.org

NOTES	The values indicated in this conformity check are only given as examples. It is therefore essential to refer to the Technical Note which deals with your vehicle. **Test conditions:** engine warm, idling at **80 ˚C**.

FUEL CIRCUIT

Order	Function	Parameter or Status Check or Action		Display and notes	Fault finding
1	**Engine speed**	**PR145:**	Engine speed	**Gives the engine's rotational speed in rpm. 700 ± 50 rpm**	In the event of a fault apply the interpretation for **DF154 Flywheel signal sensor circuit**.
2	**Fuel temperature**	**PR063:**	Fuel temperature	**80 ± 5 ˚C**	In the event of a fault, apply the interpretation of **DF098 Fuel temperature sensor circuit**.
3	**Rail pressure**	**PR008:**	Rail pressure setpoint	During operation, parameter **PR213** should not exceed a **40 bar** difference at a stabilised idle speed. **PR213 = PR008 - PR038 ≈ 0 bar**	In the event of a fault, apply the interpretation of **DF208 "Fuel pressure solenoid valve circuit", or DF197 "Fuel pressure signal"**.
4		**PR038:**	Rail pressure		
5		**PR213:**	Rail pressure loop difference		
6	**Turbocharger**	**PR346:**	Turbocharger wastegate valve position	**PR346 = 10 mm at idling speed PR346 < 10 mm in deceleration**	In the event of a fault, apply the interpretation of **DF055 Turbocharging pressure regulation circuit**.
7	**Fuel flow**	**PR017:**	Fuel flow	**0 < X < 60 mm^3/stroke**	In the event of a fault, apply the interpretation of **DF197 "Fuel pressure signal"**
8	**Duration of injection**	**PR101:**	Duration of injection	**0 < X < 20000 µs**	

GETtheMANUALS.org

NOTES	The values indicated in this conformity check are only given as examples. It is therefore essential to refer to the Technical Note which deals with your vehicle. **Test conditions:** engine warm, idling at **80 ˚C**.

FUEL CIRCUIT (continued)

Order	Function	Parameter or Status Check or Action		Display and notes	Fault finding
9	**Sensor voltages**	**PR082:**	Fuel temperature sensor voltage	**1.62 ± 0.1 V at 80 ˚C**	In the event of a fault, apply the interpretation of **DF098 Fuel temperature sensor circuit**.
10		**PR223:**	Fuel pressure sensor voltage	**0.5 V < X < 2 V**	In the event of a fault, apply the interpretation of **DF208 Fuel pressure signal** and **DF197 Fuel pressure solenoid valve circuit**.
11	**Turbocharger potentiometer voltage**	**PR345:**	Turbocharger wastegate potentiometer voltage	**PR345 = 0.45 V for PR346 = 10 mm**	In the event of a fault, apply the interpretation of **DF055 Turbocharging pressure regulation circuit**.
12	**Fuel flow correction** (except for VELSATIS Vdiag 04)	**PR364:**	Cylinder no. 1 fuel flow correction	**± 1 mm^3/stroke**	If inconsistency, perform a check using **test 10 INCORRECT INJECTOR OPERATION**.
13		**PR405:**	Cylinder no. 2 fuel flow correction		
14		**PR406:**	Cylinder no. 3 fuel flow correction		
15		**PR365:**	Cylinder no. 4 fuel flow correction		
16		**PR407:**	Cylinder no. 5 fuel flow correction		
17		**PR408:**	Cylinder no. 6 fuel flow correction		

GETtheMANUALS.org

NOTES	The values indicated in this conformity check are only given as examples. It is therefore essential to refer to the Technical Note which deals with your vehicle. **Test conditions:** engine warm, idling at **80 ˚C**.

ANTI POLLUTION/OBD

Order	Function	Parameter or Status Check or Action	Display and notes	Fault finding
1	**Engine speed**	**PR145:** Engine speed	**Gives the engine's rotational speed in rpm.** **700 ± 50 rpm**	In the event of a fault apply the interpretation for **DF154 Flywheel signal sensor circuit**.
2	**EGR valve**	**PR136:** EGR position	**N = 700 rpm** When starting: **PR136 = 2 ± 0.1 mm** After a few minutes: **PR136 = 0 ± 0.1 mm**	In the event of a fault, apply the interpretation of **DF209 EGR valve position sensor circuit**.
3		**PR160:** EGR potentiometer voltage	**4 V ± 0.1 V**	
4	**Air flow**	**PR146:** Inlet air flow	N = 700 rpm and EGR = 3.2 mm: **PR146 = 42 kg/h ± 4.2** N = 700 rpm and EGR = 0 mm: **PR146 = 72.3 kg/h ± 7.2 kg/h** (To obtain EGR = 0 mm, depress the accelerator pedal **briefly** and release the pedal while displaying the **PR136 "EGR valve position"** parameter in the diagnostic tool, then freeze the image when parameter **PR136 = 0 mm**).	In the event of a fault, apply the interpretation of **DF056 Air flow sensor circuit**.
5		**PR225:** Air flow sensor voltage	**3.29 ± 0.1 V at 80 ˚C**	

GETtheMANUALS.org

NOTES	The values indicated in this conformity check are only given as examples. It is therefore essential to refer to the Technical Note which deals with your vehicle. **Test conditions:** engine warm, idling at **80 ˚C**.

EMISSION CONTROL/OBD (CONTINUED)

Order	Function	Parameter or Status Check or Action		Display and notes	Fault finding
6	**Combustion misfiring** (except for VELSATIS Vdiag 04)	**ET057:**	Misfiring on cylinder 1	**NOT DETECTED**	If inconsistency, perform a check using **test 10 INCORRECT INJECTOR OPERATION**. **IMPORTANT** To reinitialise this status, use **RZ007 Fault memory**.
7		**ET058:**	Misfiring on cylinder 2		
8		**ET059:**	Misfiring on cylinder 3		
9		**ET060:**	Misfiring on cylinder 4		
10		**ET061:**	Misfires in cylinder 5		
11		**ET062:**	Misfires in cylinder 6		
13	**OBD fault**	**ET148:**	OBD warning light activation request	**INACTIVE** **Warning light controlled by the engine injection computer: "allocated via the multiplex network".**	In the event of a fault with the interpretation of status **ET148 "OBD warning light activation request" ensure no faults are present**. If the fault is still present run fault finding on the instrument panel.

GETtheMANUALS.org

NOTES	The values indicated in this conformity check are only given as examples. It is therefore essential to refer to the Technical Note which deals with your vehicle. **Test conditions:** engine warm, idling at **80 ˚C**.

DRIVER PARAMETERS

Order	Function	Parameter or Status Check or Action		Display and notes	Fault finding
1	**Engine speed**	**PR145:**	Engine speed	**Gives the engine's rotational speed in rpm. 700 ± 50 rpm**	In the event of a fault apply the interpretation for **DF154 Flywheel signal sensor circuit**.
2	**Accelerator pedal**	**PR030:**	Accelerator pedal position	**0 %**	If only one gang responds after the pedal is depressed, change the pedal sensor. If the voltages measured do not correspond to ± **0.5 V**, replace the pedal sensor.
3		**PR147:**	Pedal potentiometer voltage gang 1	**No load: PR147 = 0.7 ± 0.1 V Full load: PR147 = 4.5 ± 0.1 V**	
4		**PR148:**	Pedal potentiometer voltage gang 2	**No load: PR148 = 0.35 ± 0.1 V Full load: PR148 = 2.2 ± 0.1 V**	
5		**PR342:**	Pedal sensor power supply gang 1	**4.9 ± 0.5 V**	
6	**Voltage**	**PR215:**	Sensor feed voltage no. 1	**4.9 ± 0.5 V**	
7	**Brake pedal**	**ET012:**	Primary brake contact	**RELEASED**	In the event of a fault, refer to the interpretation of status **ET012** Primary brake contact
8		**ET013:**	Secondary brake contact	**RELEASED**	In the event of a fault, refer to the interpretation of status **ET013 Secondary brake contact**.

GETtheMANUALS.org

NOTES	The values indicated in this conformity check are only given as examples. It is therefore essential to refer to the Technical Note which deals with your vehicle. **Test conditions:** engine warm, idling at **80 ˚C**.

IGNITION/PREHEATING

Order	Function	Parameter or Status Check or Action		Display and notes	Fault finding
1	**Engine**	**ET038:**	Engine (except for VELSATIS Vdiag 04)	**NORMAL**	If status **ET038** is **STATUS 1**, carry out a conformity check using the **Emission control/ OBD** function.
2	**Engine speed**	**PR145:**	Engine speed	**Gives the engine's rotational speed in rpm. 700 ± 50 rpm**	In the event of a fault apply the interpretation for **DF154 Flywheel signal sensor circuit**.
3	**Temperature**	**PR064:**	Coolant temperature	Check the values displayed by the sensors by referring to the "Glossary" section. **PR064 = 80 ˚C ± 5 ˚C**	If there is a fault use the interpretation for **DF001 Coolant temperature sensor circuit**.
4		**PR058:**	Air temperature		In the event of a fault, apply the interpretation of faults **DF039 Air inlet temperature sensor circuit** (Vdiag 04, 08 only) **and DF324 OBD air temperature sensor circuit** (Vdiag 0C only).
5	**Preheating**	**PR176:**	Preheating phase	**0 < X < 30 s**	In the event of a fault, refer to the interpretation of **ET134 Pre/postheating relay control**.
6		**ET134:**	Pre-postheating relay control	**ACTIVE** during the preheating phase, then **INACTIVE**	
7		**ET204:**	Control for preheating warning light	**ACTIVE** during the preheating phase, then **INACTIVE**	If there is a fault, consult the interpretation of status **ET204 Preheating warning light control**.
8	**Computer feed voltage**	**PR071:**	Computer feed voltage	**11 V < X < 15 V**	In the event of a fault, apply the interpretation of fault **DF175 "Supply"**.

GETtheMANUALS.org

NOTES	The values indicated in this conformity check are only given as examples. It is therefore essential to refer to the Technical Note which deals with your vehicle. **Test conditions:** engine warm, idling at **80 ˚C**.

ENGINE COOLING

Order	Function	Parameter or Status Check or Action	Display and notes	Fault finding
1	Temperature	**PR058:** Air temperature	Check the values displayed by the sensors by referring to the "Glossaries". **PR064 ≈ PR066 ≈ PR063 ≈ 80 ˚C ± 5 ˚C**	In the event of a fault, apply the interpretation of faults **DF039 Air inlet temperature sensor circuit** (Vdiag 04, 08 only) **and DF324 OBD air temperature sensor circuit** (Vdiag 0C only).
2		**PR064:** Coolant temperature		If there is a fault use the interpretation for **DF001 Coolant temperature sensor circuit**.
3		**PR066:** Oil temperature		In the event of a fault, apply the interpretation of the **DF769 Oil temperature** (Vdiag 0C only).
4		**PR063:** Fuel temperature		In the event of a fault, apply the interpretation of **DF098 Fuel temperature sensor circuit**.

GETtheMANUALS.org

NOTES	The values indicated in this conformity check are only given as examples. It is therefore essential to refer to the Technical Note which deals with your vehicle. **Test conditions:** engine warm, idling at **80 ˚C**.

ENGINE COOLING (CONTINUED 1)

Order	Function	Parameter or Status Check or Action	Display and notes	Fault finding
5	**Antipercolation device**	**ET273:** Anti-percolation	**INACTIVE**	In the event of a fault, refer to the interpretation of status **ET273** Anti-percolation
6	**Motor-driven fan assembly**	**ET143:** Low speed fan assembly relay control	**ACTIVE** for an engine operating temperature greater than **99 ˚C** and is stopped for a temperature lower than **96 ˚C**.	In the event of a fault, refer to the interpretation of **ET143 Low speed fan relay control**.
7		**ET144:** High-speed fan assembly relay control	**INACTIVE** for an engine operating temperature less than **102 ˚C** and stops for a temperature less than **99 ˚C**.	In the event of a fault, refer to the interpretation of **ET144 High speed fan relay control**.

GETtheMANUALS.org

NOTES	The values indicated in this conformity check are only given as examples. It is therefore essential to refer to the Technical Note which deals with your vehicle. **Test conditions:** engine warm, idling at **80 ˚C**.

ENGINE COOLING (CONTINUED 2)

Order	Function	Parameter or Status Check or Action	Display and notes	Fault finding
8	**Sensor voltage**	**PR083:** Air temperature sensor voltage	**3.3 ± 0.1 V at 80 ˚C**	In the event of a fault, apply the interpretation of faults **DF039 Air inlet temperature sensor circuit** (Vdiag 04, 08 only) **and DF324 OBD air temperature sensor circuit** (Vdiag 0C only).
9		**PR084:** Coolant temperature sensor voltage	**1.3 ± 0.1 V at 80 ˚C**	If there is a fault use the interpretation for **DF001 Coolant temperature sensor circuit**.
10		**PR085:** Oil temperature sensor voltage	**1.4 V ± 0.1 V at 80 ˚C**	In the event of a fault, apply the interpretation of **DF058 Oil temperature sensor circuit** (Vdiag 0C only).
11		**PR082:** Fuel temperature sensor voltage	**1.6 ± 0.1 V at 80 ˚C**	In the event of a fault, apply the interpretation of **DF098 Fuel temperature sensor circuit**.
12	**Coolant temperature warning light**	**ET027:** Coolant temperature warning light request	**INACTIVE**	**In the event of a fault with interpretation of ET027 "Coolant temperature warning light request",** run fault finding on the instrument panel.

GETtheMANUALS.org

NOTES	The values indicated in this conformity check are only given as examples. It is therefore essential to refer to the Technical Note which deals with your vehicle. **Test conditions:** engine warm, idling at **80 ˚C**.

HEATING

Order	Function	Parameter or Status Check or Action		Display and notes	Fault finding
1	**Coolant temperature**	**PR064:**	Coolant temperature	**80 ˚C ± 5 ˚C**	If there is a fault use the interpretation for **DF001 Coolant temperature sensor circuit**.
2	**Heating element**	**ET276:**	Heating elements	**WITH (depending on vehicle configuration)**	In the event of a fault, apply the interpretation of **ET276 Heating elements**.
3	**Sensor voltage**	**PR084:**	Coolant temperature sensor voltage	**1.3 ± 0.1 V at 80 ˚C**	If there is a fault use the interpretation for **DF001 Coolant temperature sensor circuit**.
4	**Heating element**	**ET205:**	Heating element no. 1 relay control	**INACTIVE at 80 ˚C**	In the event of a fault, apply the interpretation of **ET205 Heating element no. 1 relay control**.
5		**ET206:**	Heating element no. 2 relay control	**INACTIVE at 80 ˚C**	In the event of a fault, apply the interpretation of **ET206 Heating element no. 2 relay control**.
6		**ET207:**	Heating element no. 3 relay control	**INACTIVE at 80 ˚C**	In the event of a fault, apply the interpretation of **ET207 Heating element no. 3 relay control**.

GETtheMANUALS.org

NOTES	The values indicated in this conformity check are only given as examples. It is therefore essential to refer to the Technical Note which deals with your vehicle. **Test conditions:** engine warm, idling at **80 ˚C**.

CRUISE CONTROL/SPEED LIMITER

Order	Function	Parameter or Status Check or Action		Display and notes	Fault finding
1	**Vehicle speed**	**PR155:**	Vehicle speed	**Gives the vehicle speed in mph (km/h). 0 mph**	**Perform a fault finding procedure on the ABS computer.**
2	**Cruise control/ speed limiter**	**PR130:**	Cruise control setpoint	**0 mph**	In the event of a fault, apply the interpretation of **ET557 Deactivation by cruise control/speed limiter function**.
3		**ET042:**	Cruise control/ speed limiter	**INACTIVE LIMIT CRUISE**	If there is a fault, use the interpretation for **ET042 Cruise control/Speed limiter**.
4		**ET413:**	Cruise control/ speed limiter function	**INACTIVE SUSPEND RESUME MINUS PLUS INACTIVE**	In the event of a fault, apply the interpretation for **ET413 Cruise control/Speed limiter function**.
5		**PR178:**	Cruise control switch voltage (except VELSATIS Vdiag 04)	If **ET045** is **"INACTIVE", PR178 = 5 ± 0.1 V**. If **ET045** is **"PLUS", PR178 = 2.4 ± 0.1 V**. If **ET045** is **"MINUS", PR178 = 1.3 ± 0.1 V**. If **ET045** is **"SUSPEND", PR178 = 0.1 ± 0.1 V**. If **ET045** is **"RESUME", PR178 = 3.76 ± 0.1 V**.	

GETtheMANUALS.org

NOTES	The values indicated in this conformity check are only given as examples. It is therefore essential to refer to the Technical Note which deals with your vehicle. **Test conditions:** engine warm, idling at **80 ˚C**.

CRUISE CONTROL/SPEED LIMITER (CONTINUED)

Order	Function	Parameter or Status Check or Action	Display and notes	Fault finding
6	**Cruise control/ speed limiter (continued)**	**ET556:** Driver deactivation of the cruise control/speed limiter Note: the cruise control can only be activated at a speed of V > 18 mph (30 km/h	**STATUS 1:** Brake pedal depressed **STATUS 2:** Traction control request **STATUS 3:** Press on the Suspend button **STATUS 4:** Decoupling of engine/gearbox **STATUS 5:** Gear lever in neutral position **STATUS 6:** Inconsistency between the request and the vehicle speed	In the event of a fault, apply the interpretation of **ET556 Driver deactivation of the cruise control/speed limiter**. **IMPORTANT** Certain deactivations are stored; to reinitialise this status use **RZ007 Fault memory**
7		**ET557:** Cruise control/ speed limiter deactivation by function Note: the cruise control can only be activated at a speed of V > 18 mph (30 km/h).	**STATUS 1:** Fault in cruise control or speed limiter **STATUS 2:** Fault detected by the injection computer **STATUS 3:** Vehicle speed not refreshed **STATUS 4:** Vehicle speed invalid	In the event of a fault, apply the interpretation of **ET557 Deactivation by cruise control/speed limiter function**. **IMPORTANT** Certain deactivations are stored; to reinitialise this status use **RZ007 Fault memory**
8	**Brake pedal**	**ET012:** Primary brake contact	**RELEASED**	In the event of a fault, refer to the interpretation of status **ET012** Primary brake contact
9		**ET013:** Secondary brake contact	**RELEASED**	In the event of a fault, refer to the interpretation of status **ET013** Secondary brake contact

GETtheMANUALS.org

NOTES	The values indicated in this conformity check are only given as examples. It is therefore essential to refer to the Technical Note which deals with your vehicle. **Test conditions:** engine warm, idling at **80 ˚C**.

STARTING

Order	Function	Parameter or Status Check or Action		Display and notes	Fault finding
1	**Engine**	**ET038:**	Engine (except for VELSATIS Vdiag 04)	**NORMAL**	If status **ET038** is **STATUS 1**, carry out a conformity check using the **Emission control/ OBD** function.
2	**Computer feed voltage**	**PR071:**	Computer feed voltage	**11 V < PR071 < 15 V**	In the event of a fault, apply the interpretation of fault **DF175 Supply**.
3	**Sensor voltage**	**PR215:**	Sensor feed voltage no. 1	**4.9 ± 0.1 V**	If only one gang responds after the pedal is depressed, change the pedal sensor. If the voltages measured do not correspond to **± 0.5 V**, replace the pedal sensor.

GETtheMANUALS.org

NOTES	The values indicated in this conformity check are only given as examples. It is therefore essential to refer to the Technical Note which deals with your vehicle. **Test conditions:** engine warm, idling at **80 ˚C**.

PROTECTION

Order	Function	Parameter or Status Check or Action	Display and notes	Fault finding
1	**Impact detected**	**ET077:** Impact detected	**NO**	If **YES**, switch off the ignition for **40 seconds**, then switch it back on so the engine can be restarted. Then clear any faults.
2	**Engine immobiliser**	**ET003:** Engine immobiliser	**INACTIVE**	In the event of a fault, run a multiplex network test using the diagnostic tool; then if the test is OK, test the UCH.
3		**ET341:** Immobiliser code programmed	**YES**	If **NO**, refer to interpretation of ET341.

GETtheMANUALS.org

Tool status	Diagnostic tool title
ET003	Engine immobiliser
ET012	Primary brake contact
ET013	Secondary brake contact
ET027	Coolant temperature warning light request
ET028	Level 1 fault warning light request
ET029	Level 2 fault warning light request
ET038	Engine (except for VELSATIS Vdiag 04)
ET042	Cruise control/speed limiter
ET057	Misfire on cylinder 1 (except VELSATIS Vdiag 04)
ET058	Misfire on cylinder 2 (except VELSATIS Vdiag 04)
ET059	Misfire on cylinder 3 (except VELSATIS Vdiag 04)
ET060	Misfire on cylinder 4 (except VELSATIS Vdiag 04)
ET077	Impact detected
ET133	Main relay control
ET134	P
ET143	Low speed fan assembly relay control
ET144	High-speed fan assembly relay control
ET148	OBD warning light activation request (VELSATIS Vdiag 08, 0C only)
ET204	Control for preheating warning light
ET205	Heating element no. 1 relay control
ET206	Heating element no. 2 relay control
ET207	Heating element no. 3 relay control
ET273	Anti-percolation
ET274	Misfire on cylinder 5 (except VELSATIS Vdiag 04)
ET275	Misfire on cylinder 6 (except VELSATIS Vdiag 04)
ET276	Heating elements (except VELSATIS Vdiag 04)
ET341	Immobiliser code programmed
ET413	Cruise control/speed limiter function
ET556	Driver deactivation of the cruise control/speed limiter
ET557	Deactivation by cruise control/speed limiter function

GETtheMANUALS.org

ET003	ENGINE IMMOBILISER

NOTES	**Special note:** Apply the conformity check to see if the statuses are consistent with the operating programs of the system.

ACTIVE	If status **ET003** is permanently **ACTIVE**, refer to the interpretation of the UCH fault finding note (see **87G, Connection unit**).
INACTIVE	When the ignition is switched on, and when driving, status **ET003** becomes **INACTIVE**. If this does not occur, refer to the interpretation of the UCH fault finding note (see **87G, Connection unit**).

AFTER REPAIR	Carry out another fault finding check on the system. Deal with any other faults. Clear the stored faults.

GETtheMANUALS.org

ET012	PRIMARY BRAKE CONTACT

NOTES	**Special note:** Apply the conformity check to see if the statuses are consistent with the operating programs of the system.

PRESSED

When the driver presses the brake pedal, status **ET012** becomes "**PRESSED**", and status **ET013 "Secondary brake contact"** becomes "**PRESSED**".

If the driver depresses the brake pedal and status **ET012** remains **RELEASED** and **the brake lights are operating**:
Check:
– the condition of the brake light switch contacts and connections.
– the **continuity and absence of interference resistance** on the following connection:

Diesel computer **track A 21** ⟶ brake switch **black connector, tracks B3 or 3**

Repair if necessary.

If the driver depresses the brake pedal and status **ET012** remains **PRESSED** and **the brake lights are not operating**:
Check:
– the condition of the bulbs, replace if necessary,
– the condition of the **F6 (20A)** fuse in the passenger compartment fuse box and relay,
– the presence of **+ 12 V** after ignition on **tracks A1** and **B1** or **track 2** of the switch,
– then remove the brake light switch and carry out the checks in the following table:

	Continuity between tracks	**Insulation between tracks**
Switch pressed (brake pedal released)	A1 and B3 Or 2 and 3	B1 and A3 Or 2 and 1
Switch released (brake pedal pressed)	B1 and A3 Or 2 and 1	A1 and B3 Or 2 and 3

If these checks are not in order, replace the brake light switch.

AFTER REPAIR	Carry out another fault finding check on the system. Deal with any other faults. Clear the stored faults.

GETtheMANUALS.org

ET012 CONTINUED	

RELEASED	When the driver releases the brake pedal, status **ET012** becomes **RELEASED**, and status **ET013 Secondary brake contact** becomes **RELEASED**. If this does not happen, check the condition and operation of the brake light switch by carrying out the checks associated with the **PRESSED** status.

Note:
The statuses **ET012 Primary brake contact** and **ET013 Secondary brake contact** are directly linked.

AFTER REPAIR	Carry out another fault finding check on the system. Deal with any other faults. Clear the stored faults.

GETtheMANUALS.org

ET013	SECONDARY BRAKE CONTACT

NOTES	**Special note:** Apply the conformity check to see if the statuses are consistent with the operating programs of the system.

PRESSED

When the driver depresses the brake pedal, status **ET013** becomes "**PRESSED**", and status **ET012 "Primary brake contact"** becomes "**PRESSED**".

If the driver depresses the brake pedal and status **ET013** remains "**RELEASED**" and **the brake lights are operating**:
Check:
– the condition of the brake light switch contacts and connections.
– the **continuity and absence of interference resistance** on the following connection:

Diesel computer **track A 21** ⟶ brake switch **black connector, tracks B3 or 3**

Repair if necessary.

If the driver depresses the brake pedal and status **ET013** remains **PRESSED** and **the brake lights are not operating**:
Check:
– the condition of the bulbs, replace if necessary,
– the condition of the **F6 (20A)** fuse in the passenger compartment fuse box and relay,
– the presence of **+ 12 V** after ignition on **tracks A1** and **B1** or **track 2** of the switch,
– then remove the brake light switch and carry out the checks in the following table:

	Continuity between tracks	**Insulation between tracks**
Switch pressed (brake pedal released)	A1 and B3 Or 2 and 3	B1 and A3 Or 2 and 1
Switch released (brake pedal pressed)	B1 and A3 Or 2 and 1	A1 and B3 Or 2 and 3

If these checks are not in order, replace the brake light switch.

AFTER REPAIR	Carry out another fault finding check on the system. Deal with any other faults. Clear the stored faults.

GETtheMANUALS.org

ET013 CONTINUED	

RELEASED	When the driver releases the brake pedal, status **ET013** becomes **RELEASED**, and status **ET012 Primary brake contact** becomes **RELEASED**. If this does not happen, check the condition and operation of the brake light switch by carrying out the checks associated with the **PRESSED** status.

Note:
The statuses **ET012 Primary brake contact** and **ET013 Secondary brake contact** are directly linked.

AFTER REPAIR	Carry out another fault finding check on the system. Deal with any other faults. Clear the stored faults.

GETtheMANUALS.org

ET038	Engine

NOTES	**Special note:** Apply the conformity check to see if the statuses are consistent with the operating programs of the system.

Except VELSATIS Vdiag 04

NORMAL	After starting the engine, status **ET038** becomes **NORMAL**. Run a multiplex network test (see **88B, Multiplex**).
STATUS 1:	Status **ET038** is permanently **STATUS 1** when the engine misfires (combustion fault). Perform a conformity check using the **Fuel circuit** sub-function. **Check:** – that the injectors are in good condition, – the compression rate, – the high pressure circuit sealing (leaks, etc.), – the other faults displayed by the diagnostic tool. If the fault is still present, contact Techline.

AFTER REPAIR	Carry out another fault finding check on the system. Deal with any other faults. Clear the stored faults.

GETtheMANUALS.org

ET042	CRUISE CONTROL/SPEED LIMITER

NOTES	**Special note:** Apply the conformity check to see if the statuses are consistent with the operating programs of the system.

CRUISE CONTROL	When the driver presses the cruise control switch, status **ET042** must change to **CRUISE** and the **green** speed limiter warning light on the instrument panel must be displayed. Check the **insulation, continuity and absence of interference resistance** of the following connection: Diesel computer **track A 81** → **track A3** of the cruise control switch Repair if necessary.
	If the fault has still not been solved, look for possible damage to the wiring harness, check the **connections and condition** of the cruise control switch and its connections. Replace or repair if necessary. If the fault is still present, contact the Techline.

LIMITER	When the driver presses the cruise control switch, status **ET042** must change to **LIMIT** and the **orange** speed limiter warning light on the instrument panel must be displayed. Check the **insulation, continuity and absence of interference resistance** of the following connection: Diesel computer **track A 23** → **track B1** of the cruise control switch Repair if necessary.
	If the fault has still not been solved, look for possible damage to the wiring harness, check the **connections and condition** of the cruise control switch and its connections. Replace or repair if necessary. If the fault is still present, contact the Techline.

AFTER REPAIR	Carry out another fault finding check on the system. Deal with any other faults. Clear the stored faults.

GETtheMANUALS.org

ET077	IMPACT DETECTED

NOTES	**Special note:** Apply the conformity check to see if the statuses are consistent with the operating programs of the system.

YES	If the vehicle has been involved in an accident, the injection computer receives the impact signal via the multiplex network and may switch off the ignition. Status **ET077** is **YES**. Switch off the ignition for **10 seconds**, then switch it back on, so the engine can be restarted. Test the multiplex network (see **88B, Multiplexing**) and deal with any faults present.
NO	Under normal operating conditions, status **ET077** is **NO** when the computer has received no impact signal.

AFTER REPAIR	Carry out another fault finding check on the system. Deal with any other faults. Clear the stored faults.

GETtheMANUALS.org

ET133	MAIN RELAY CONTROL

NOTES	**Special note:** Apply the conformity check to see if the statuses are consistent with the operating programs of the system.

ACTIVE	Status **ET133** becomes **ACTIVE** when the main relay is supplied with power. If status **ET133** is permanently "**INACTIVE**", refer to the interpretation of fault **DF015 "Main relay control circuit"**.
INACTIVE	If status **ET133** is permanently "**INACTIVE**", refer to the interpretation of fault **DF015 "Main relay control circuit"**.

AFTER REPAIR	Carry out another fault finding check on the system. Deal with any other faults. Clear the stored faults.

GETtheMANUALS.org

ET134	PRE-POSTHEATING RELAY CONTROL

NOTES	**Special note:** Apply the conformity check to see if the statuses are consistent with the operating programs of the system.

ACTIVE	When the ignition is switched on, status **ET134** becomes **ACTIVE** for a time that varies according to the engine coolant temperature. Both the relay and the heater plugs are then supplied. When the vehicle is started from cold, the injection computer always actuates the preheating unit to allow the vehicle to start more easily; the status becomes **ACTIVE** during the starting phase. After starting, the status should remain **ACTIVE** for a variable period depending on the engine coolant temperature. If the vehicle does not start and status **ET134** becomes "**ACTIVE**" when switching on the ignition or during the starting phase, a preheating connection or circuit component may be damaged.

AFTER REPAIR	Carry out another fault finding check on the system. Deal with any other faults. Clear the stored faults.

GETtheMANUALS.org

ET134 CONTINUED	

"ACTIVE" (CONTINUED)

Check:
– the **F12 (70A)** power fuse on the supply and power board,
– the **+ 12 V** feed to heater plugs after relay control, and the relay connections,
– the **continuity and absence of interference resistance** of the following connections:

Pre-postheating unit, white connector, **track 1**	→	Heater plug no. 1 **track 1**
Pre-postheating unit, purple connector, **track 1**	→	Heater plug no. 2 **track 1**
Pre-postheating unit, white connector, **track 2**	→	Heater plug no. 3 **track 1**
Pre-postheating unit, purple connector, **track 2**	→	Heater plug no. 4 **track 1**
Pre-postheating unit, white connector, **track 6**	→	Heater plug no. 5 **track 1**
Pre-postheating unit, purple connector, **track 6**	→	Heater plug no. 6 **track 1**

– the condition and correct connection of the contacts of the pre-postheating unit **R300** connector.

If the vehicle starts, the preheating has finished and status **ET134** remains "**ACTIVE**" during the engine operating phase, consult the interpretation of faults **DF186 "Heater plugs circuit", DF262 "Heater plugs no. 1 group circuit"** and **DF263 "Heater plugs no. 2 group circuit"**.

INACTIVE

If the vehicle does not start, the status remains **INACTIVE** and the preheating was not performed when the ignition was switched on or during the starting phase, check the following connections:

Diesel computer **track A 19**	→	Pre-postheating unit **green connector, track 8**
Diesel computer **track A 49**	→	Pre-postheating unit **green connector, track 9**
Diesel computer **track A 68**	→	Pre-postheating unit, purple connector, **track 9**

Repair if necessary.

AFTER REPAIR	Carry out another fault finding check on the system. Deal with any other faults. Clear the stored faults.

GETtheMANUALS.org

ET143	LOW-SPEED FAN ASSEMBLY RELAY CONTROL

NOTES	Apply the conformity check to see if the statuses are consistent with the operating programs of the system. If the vehicle is fitted with air conditioning, the fan assembly electrical circuit contains 2 relays. Fan assembly speed 1 relay will be run when the temperature of the engine coolant exceeds **96**˚ and will be dedicated to cooling of the engine as long as the engine coolant temperature does not exceed **99**˚. If the engine coolant temperature exceeds **99**˚, fan assembly speed 2 relay will be run and the engine cooling fan will run more quickly.

ACTIVE	When the coolant reaches **96 ˚C**, the diesel computer actuates the low speed fan relay and status **ET143** becomes **ACTIVE**. The relay then supplies the fan assembly and the cooling fan begins to turn. Run command **AC038 Low-speed fan assembly relay** and check visually that the cooling fan is turning. If this is not the case, carry out the following operations: – check the condition of the **F15 (60A)** fuse and the engine relay, – disconnect the low-speed and high-speed relays, check their operation and the condition of the connections. – repair if necessary, – Check for **+ 12 V** on **terminal 10** of the low-speed relay during its actuation, – then check the **continuity and the absence of interference resistance** of the following connection: Diesel computer **track A 18** ⟶ **track 11** of the low-speed relay

INACTIVE	If the engine temperature is lower than **96 ˚C**, the engine cooling fan cannot switch on and the low speed engine cooling fan relay cannot be run. Status **ET143** becomes **INACTIVE** when the control relay and the engine cooling fan are not supplied.

AFTER REPAIR	Carry out another fault finding check on the system. Deal with any other faults. Clear the stored faults.

GETtheMANUALS.org

ET144	HIGH-SPEED FAN ASSEMBLY RELAY CONTROL

NOTES	Apply the conformity check to see if the statuses are consistent with the operating programs of the system. If the vehicle is fitted with air conditioning, the fan assembly electrical circuit contains 2 relays. Fan assembly speed 2 relay will be actuated when the engine coolant temperature exceeds **99 ˚C** and will be dedicated to engine cooling as long as the engine coolant temperature does not exceed **102 ˚C**.

ACTIVE	When the coolant reaches **99 ˚C**, the diesel computer activates the high speed fan relay and status **ET144** becomes **ACTIVE**. The relay then supplies the fan assembly and the cooling fan begins to turn. Run command **AC039 High-speed fan assembly relay** and visually check that the cooling fan is turning. If this is not the case, carry out the following operations: – check the condition of the **F15 (60A)** fuse and the engine relay, – disconnect the fan unit relays, check their operation and the condition of the connections, – repair if necessary, – Check for the presence of **+ 12 V** on **terminal 6** of the fan unit and on **terminal 62** of the high speed relay when it is actuated, – then check the **continuity and absence of interference resistance** of the following connections: Diesel computer **track A 38** → **track 7** of the fan assembly relay Fan unit relay **track 7** → High speed relay **track 60**

INACTIVE	If the engine temperature is lower than **99 ˚C**, the engine cooling fan cannot switch on and the high speed engine cooling fan relay cannot be run. Status **ET144** becomes **INACTIVE** when the control relay and the engine cooling fan are not supplied.

AFTER REPAIR	Carry out another fault finding check on the system. Deal with any other faults. Clear the stored faults.

GETtheMANUALS.org

ET204	PREHEATING WARNING LIGHT CONTROL

NOTES	Apply the conformity check to see if the statuses are consistent with the operating programs of the system. Statuses **ET028 Level 1 fault warning light request** and **ET204 Preheating warning light control** are directly linked. If one is active, the other must assume the same status.

ACTIVE	Check that status **ET204** becomes **ACTIVE** and that the preheating warning light is activated when the ignition is switched on.
	Perform a fault finding procedure beforehand on the multiplex network.
	If the network is not correct (see **88B Multiplexing**).
	If the network diagnosis is OK, check:
	– the complete engine injection system,
	– deal with any faults,
	– If the fault is still present, check the preheating unit and the heater plugs using the following faults:
	  – **DF186 Heater plug circuit,**
	  – **DF262** Heater plug group no. 1 circuit
	  – **DF263 Heater plug group no. 2 circuit.**
	– check the preheating relay using command **AC037 Preheating relay**.
	– if the fault is still present, perform a fault finding procedure on the instrument panel (see **MR 353, MR 402 or MR 361 Mechanical, 83A, Instrument panel**),
	– If the fault is still present, contact the Techline.

INACTIVE	Status **ET204 "Preheating warning light control"** is "**INACTIVE**" when the preheating warning light is off.

AFTER REPAIR	Carry out another fault finding check on the system. Deal with any other faults. Clear the stored faults.

GETtheMANUALS.org

ET205	HEATING ELEMENT 1 RELAY CONTROL

NOTES	**Special note:** Apply the conformity check to see if the statuses are consistent with the operating programs of the system.

ACTIVE

Status **ET205** becomes **ACTIVE** when the heating element no. 1 relay control is activated.
Where the heating element no. 1 relay is requested and status **ET205** is not **ACTIVE** when the ignition is switched on, a connection or circuit component of the heating element no. 1 relay may be damaged.

Check:
– the heating element no. 1 relay fuse **F14 (70 A)**,
– the heating element no. 1 relay mounting connections,
– the engine management computer connections,
– repair if necessary,
– check for **insulation from earth, continuity and absence of interference resistance** on the following connections:

Diesel computer **track A 1** → Heating element no. 1 relay **track 2**

Diesel computer **track A 2** → Heating element no. 1 relay **track 2**

– check the **continuity, insulation from + 12 V and the absence of interference resistance** for the following connection:

Diesel computer **track A 36** → Heating element no.1 relay **track 65**

INACTIVE

Status **ET205** becomes **INACTIVE** when the heating control is not activated.

AFTER REPAIR	Carry out another fault finding check on the system. Deal with any other faults. Clear the stored faults.

GETtheMANUALS.org

ET206	HEATING ELEMENT 2 RELAY CONTROL

NOTES	**Special note:** Apply the conformity check to see if the statuses are consistent with the operating programs of the system.

ACTIVE

Status **ET206** becomes **ACTIVE** when the heating element no. 2 relay control is activated.
Where the heating element no. 2 relay is requested and status **ET206** is not **ACTIVE** when the ignition is switched on, a connection or circuit component of the heating element no. 2 relay may be damaged.

Check:
– the heating element no. 2 relay fuse **F13 (70 A)**,
– the heating element no. 2 relay mounting connections,
– the engine management computer connections,
– repair if necessary,
– check for **insulation from earth, continuity and absence of interference resistance** on the following connections:

Diesel computer **track A 1** → Heating element no. 2 relay **track 2**

Diesel computer **track A 2** → Heating element no. 2 relay **track 2**

– check the **continuity, insulation from + 12 V and the absence of interference resistance** for the following connection:

Diesel computer **track A 17** → Heating element no. 2 relay **track 3**

INACTIVE

Status **ET206** becomes **INACTIVE** when the heating control is not activated.

AFTER REPAIR	Carry out another fault finding check on the system. Deal with any other faults. Clear the stored faults.

GETtheMANUALS.org

ET207	HEATING ELEMENT No. 3 RELAY CONTROL

NOTES	**Special note:** Apply the conformity check to see if the statuses are consistent with the operating programs of the system.

ACTIVE

Status **ET207** must be **ACTIVE** when the heating element no. 3 relay control is activated. Where the no. 3 relay is requested and status **ET207** is not **ACTIVE** when the ignition is switched on, a connection or circuit component of the heating element no. 3 relay may be damaged.

Check:
- the heating element no. 3 relay fuse **F14 (70 A)**,
- the heating element no. 3 relay mounting connections,
- the engine management computer connections,
- repair if necessary,
- check for **insulation from earth, continuity and absence of interference resistance** on the following connections:

  Diesel computer **track A 1** → Heating element no. 3 relay **track 2**

  Diesel computer **track A 2** → Heating element no. 3 relay **track 2**

- check the **continuity, insulation from + 12 V and the absence of interference resistance** for the following connection:

  Diesel computer **track A 56** → Heating element no. 3 relay **track 35**

INACTIVE

Status **ET207** becomes **INACTIVE** when the heating control is not engaged.

AFTER REPAIR	Carry out another fault finding check on the system. Deal with any other faults. Clear the stored faults.

GETtheMANUALS.org

ET273	ANTI-PERCOLATION

NOTES	**Special note:** Apply the conformity check to see if the statuses are consistent with the operating programs of the system.

ACTIVE	Status **ET273** is "**ACTIVE**" when the engine management computer detects a high engine coolant temperature after the engine is stopped. The engine management program operates the fan to cool the engine and continuously checks the coolant temperature.
STANDBY	Status **ET273** is "**STANDBY**" when the engine has just been stopped. The status corresponds to an engine coolant temperature control phase after the engine has stopped. If the coolant temperature exceeds the maximum predefined threshold, status **ET273** becomes "**ACTIVE**". If the coolant temperature does not exceed the maximum predefined threshold in the set time, status **ET273 becomes INACTIVE**.
INACTIVE	Status **ET273** is "**INACTIVE**" when the engine coolant temperature is below the maximum threshold authorised by the engine management computer after the engine has stopped.

AFTER REPAIR	Carry out another fault finding check on the system. Deal with any other faults. Clear the stored faults.

GETtheMANUALS.org

ET276	HEATING ELEMENTS

NOTES	**Special note:** Apply the conformity check to see if the statuses are consistent with the operating programs of the system.

Except VELSATIS Vdiag 04, but presence of heating elements on the vehicle

WITH	Status **ET276 Heating elements** is **WITH** when the vehicle is fitted with additional heating.
NONE	Status **ET276 Heating elements** is **WITHOUT** when the vehicle is not fitted with additional heating. If the vehicle is fitted with additional heating and heating element relays with status **ET276** set to **WITHOUT**, refer to the interpretation of the following statuses: **ET205 "Heating element no. 1 relay control",** **ET206 "Heating element no. 2 relay control",** **ET207 "Heating element no. 3 relay control".**

AFTER REPAIR	Carry out another fault finding check on the system. Deal with any other faults. Clear the stored faults.

GETtheMANUALS.org

ET341	IMMOBILISER CODE PROGRAMMED

NOTES	**Special note:** Apply the conformity check to see if the statuses are consistent with the operating programs of the system.

YES	Status **ET341** becomes **YES** if dialogue is possible between the UCH and the injection computer and the card code is recognised. Engine starting authorisation is only given if the code is recognised by the UCH computer, and status **ET003 Engine immobiliser** is **INACTIVE**.
NO	The code remains **NO** if dialogue between the UCH and the injection computer is not possible. Status **ET003 Engine immobiliser** is **ACTIVE**. The cause of the fault may be incorrect card programming (see **87G, Interconnection unit** and follow the **card programming** procedure. Where it does not stem from the card codes, perform a multiplex network test (see **88B, Multiplexing**). Where the fault finding procedure was performed by function, ensure that dialogue is present between the UCH, the Protection and Switching unit and the injection computer. If dialogue is not established, contact the Techline.

AFTER REPAIR	Carry out another fault finding check on the system. Deal with any other faults. Clear the stored faults.

GETtheMANUALS.org

ET413	CRUISE CONTROL/SPEED LIMITER FUNCTION

NOTES	**Special note:** Apply the conformity check to see if the statuses are consistent with the operating programs of the system.

INACTIVE	Status **ET413** is **INACTIVE** when no cruise control function button has been pressed and parameter **PR178 Cruise control switch voltage** becomes **5 V**.

SUSPEND	Status **ET413** is "**SUSPEND**" when cruise control button "**0**" is pressed and parameter **PR178 "Cruise control switch voltage"** should be **0.1 V**. This button is situated to the right of the steering wheel. If status **ET413** does not change to **SUSPEND**, check the **R/0** cruise control button, and the condition of its connector. Repair if necessary. **To be able to remove the driver's airbag and carry out the measures in complete safety (**see **88C, Airbag and pretensioners).** Repair if necessary. Measure the **resistance** of the following connection, **after pressing the "0" button**: If the resistance is not approximately **0 Ω**, check the continuity of the connection when the button is not pressed. If there is continuity, replace the "R/0" control button. Measure the **resistance of the following connection, after pressing the "0"** button: Diesel computer **track A 10** ⟶ "R/0" button **track A2** Diesel computer **track A 11** ⟶ "R/0" button **track A1** If the connection is broken, repair it.

AFTER REPAIR	Carry out another fault finding check on the system. Deal with any other faults. Clear the stored faults.

GETtheMANUALS.org

ET413 CONTINUED 1	

RESUME

Status **ET413** is "**RESUME**" when cruise control button "**R**" is pressed and parameter **PR178 "Cruise control switch voltage"** should be **3.76 V**. This button is situated to the right of the steering wheel.
If status **ET413** does not change to **RESUME**, check the **R/0** cruise control button, and the condition of its connector. Repair if necessary.
To be able to remove the driver's airbag and carry out the measures in complete safety (see **88C, Airbag and pretensioners).**
Repair if necessary.
Measure the **resistance** of the following connection, **after pressing the "R" button**:
If the resistance is not approximately **900 Ω**, check the continuity of the connection when the button is not pressed.
If there is continuity, replace the "R/0" control button.

Measure the **resistance** of the following connection, **after pressing the R button**:

Diesel computer **track A 10** ⟶ "R/0" button **track A2**

Diesel computer **track A 11** ⟶ "R/0" button **track A1**

If the connection is broken, repair it.

PLUS

Status **ET413** is "**PLUS**" when cruise control button "**+**" is pressed and parameter **PR178 "Cruise control switch voltage"** should be **2.4 V**. This button is situated to the left of the steering wheel.
If status **ET413** does not change to **PLUS**, check the condition of the **+/-** cruise control button, and the condition of its connector. Repair if necessary.
To be able to remove the driver's airbag and carry out the measures in complete safety (see **88C, Airbag and pretensioners).**
Repair if necessary.
Measure the **resistance** of the following connection, **after pressing the "+" button**:
If the resistance is not approximately **300 Ω**, check the continuity of the connection when the button is not pressed.
If there is continuity, replace the "R/0" control button.

Measure the **resistance** of the following connection, after pressing the "**+**" button:

Diesel computer **track A 10** ⟶ "+/-" button **track A2**

Diesel computer **track A 11** ⟶ "+/-" button **track A1**

If the connection is broken, repair it.

AFTER REPAIR	Carry out another fault finding check on the system. Deal with any other faults. Clear the stored faults.

GETtheMANUALS.org

ET413 CONTINUED 2	

MINUS	Status **ET413** is "**MINUS**" when cruise control button "**-**" is pressed and parameter **PR178 "Cruise control switch voltage"** should be **1.3 V**. This button is situated to the left of the steering wheel. If status **ET413** does not change to **MINUS**, check the condition of the **+/-** cruise control button, and the condition of its connector. Repair if necessary. **Refer to the airbag technical note that applies to the vehicle to be able to remove the driver's airbag and carry out the measures in complete safety (see 88C, Airbag and pretensioners)**. Repair if necessary. Measure the **resistance** of the following connection, **after pressing the "-" button**: If the resistance is not approximately **100 Ω**, check the continuity of the connection when the button is not pressed. If there is continuity, replace the "R/0" control button. Measure the **resistance** of the following connection, **after pressing the "-" button**: Diesel computer **track A 10** ⟶ "+/-" button **track A2** Diesel computer **track A 11** ⟶ "+/-" button **track A1** If the connection is broken, repair it.

AFTER REPAIR	Carry out another fault finding check on the system. Deal with any other faults. Clear the stored faults.

GETtheMANUALS.org

ET556	DRIVER'S DEACTIVATION OF THE CRUISE CONTROL/SPEED LIMITER

NOTES	**Special notes:** Apply the conformity check to see if the statuses are consistent with the operating programs of the system.

Note:
Cruise control can be activated when the vehicle speed exceeds **18 mph (30 km/h)**. Status **ET556** details 6 causes for cruise control deactivation.
IMPORTANT
To reinitialise the deactivations stored by the injection computer, use command RZ007 "Fault memory".

STATUS 1	**Brake pedal depressed**
	The cruise control function is deactivated each time the brake pedal is depressed. Status **ET556** becomes **STATUS 1**, when the vehicle is being driven, with cruise control active and the brake pedal depressed. If status **ET556** becomes "**STATUS 1**" without the brake pedal being depressed, consult the interpretation of statuses **ET012 "Primary brake contact"** and **ET013 "Secondary brake contact"**.

STATUS 2	**Traction control request**
	If the vehicle being diagnosed is fitted with traction control, the cruise control function is deactivated each time traction control is selected. Status **ET556** changes to **STATUS 2**, when driving, with cruise control active and traction control requested. If status **ET556** changes to **STATUS 2** without traction control request, refer to fault finding note relating to the vehicle's traction control system.

STATUS 3	**Suspend button pressed**
	Status **ET556** changes to **STATUS 3** when driving with Cruise control/Speed limiter active, if the driver presses the Cruise control/Speed limiter **0** button. If status **ET556** becomes **STATUS 3** without button **0** on the Cruise control/Speed limiter being pressed, consult the interpretation of status **ET413 Cruise control/Speed limiter function** and perform a fault finding procedure on control button **R/0** of the Cruise control/Speed limiter.

AFTER REPAIR	Carry out another fault finding check on the system. Deal with any other faults. Clear the stored faults.

GETtheMANUALS.org

ET556 CONTINUED	

STATUS 4	**Clutch pedal depressed**
	MANUAL GEARBOX ONLY The cruise control function is deactivated if the gearbox is no longer coupled to the engine (clutch pedal depressed). Status **ET556** becomes **STATUS 4** when driving, with cruise control active and the clutch pedal depressed. If status **ET556** becomes **STATUS 4** without the clutch pedal being depressed, consult the interpretation of status **ET233 Clutch pedal**.

STATUS 5	**Gear lever in neutral position**
	Status **ET556** changes to **STATUS 5**, when driving, with cruise control active and – if the driver puts the gear lever in neutral on a MANUAL GEARBOX without declutching or, – if gear lever is in neutral on an automatic transmission. This deactivates cruise control. If status **ET556** becomes **STATUS 5** without putting the gear lever in neutral on a manual gearbox without declutching, or without neutral on an automatic transmission, contact the Techline.

STATUS 6	**Inconsistency between the request and the vehicle speed**
	Status **ET556** changes to **STATUS 6** if the computer detects too great a difference between the speed requested by the driver and the vehicle speed. This may occur when driving, with cruise control active and where the difference between speeds is great. If status **ET556** changes to **STATUS 6** without a great difference in the speeds, contact the Techline.

AFTER REPAIR	Carry out another fault finding check on the system. Deal with any other faults. Clear the stored faults.

GETtheMANUALS.org

ET557	CRUISE CONTROL/SPEED LIMITER DEACTIVATION BY FUNCTION

NOTES	**Special notes:** Only perform these tests if the statuses do not correspond with the system programming functions.

Note:
Cruise control remains deactivated as long as the vehicle speed does not exceed **18 mph (30 km/h).** Status **ET557** details 4 causes for cruise control deactivation.
IMPORTANT
To reinitialise the deactivations stored by the injection computer, use command RZ007 "Fault memory".

STATUS 1	**Cruise control or speed limiter fault**
	If status **ET557** is "**STATUS 1**", refer to the interpretation of statuses **ET042 "Cruise control/speed limiter"** and **ET413 "Cruise control/speed limiter function"**, to test the components of the cruise control system and find the faulty one. If status **ET557** changes to **STATUS 1**, deal with the faults present or stored in the computer. If the fault is still present, contact Techline.

STATUS 2	**Fault detected by the injection computer**
	Status **ET557** changes to **STATUS 2** if the injection computer detects a fault on the injection system: – **faults in the engine speed sensor or camshaft,** – **accelerator pedal faults,** – **engine speed lower than 1000 rpm,** – **engine speed greater than 4700 rpm.** Carry out a multiplex network test, then an injection system test, and carry out fault finding on any faults. If the fault is still present, contact the Techline.

AFTER REPAIR	Carry out another fault finding check on the system. Deal with any other faults. Clear the stored faults.

GETtheMANUALS.org

ET557 CONTINUED	

STATUS 3	**Vehicle speed not refreshed**
	Status **ET557** becomes **STATUS 3** if the vehicle speed received by the computer does not vary. Carry out fault finding on the **ABS** computer. If faults are present (see **38C, Anti-lock braking system).** If the fault is still present, contact the Techline.

STATUS 4	**Invalid vehicle speed**
	Status **ET557** becomes **STATUS 4** if the vehicle speed received by the computer is invalid. Carry out fault finding on the **ABS** computer. If faults are present (see **38C, Anti-lock braking system).** If the fault is still present, contact the Techline.

AFTER REPAIR	Carry out another fault finding check on the system. Deal with any other faults. Clear the stored faults.

GETtheMANUALS.org

Tool Parameter	Diagnostic tool title
PR008	Rail pressure setpoint
PR017	Fuel flow
PR030	Accelerator pedal position
PR035	Atmospheric pressure
PR041	Turbocharging pressure
PR058	Air temperature
PR063	Fuel temperature
PR064	Coolant temperature
PR066	Oil temperature (Vdiag OC only)0
PR071	Computer feed voltage
PR079	Atmospheric pressure sensor voltage
PR080	Rail pressure sensor voltage
PR082	Fuel temperature sensor voltage
PR083	Air temperature sensor voltage
PR084	Coolant temperature sensor voltage
PR085	Oil temperature sensor voltage (Vdiag OC only)0
PR101	Duration of injection
PR130	Cruise control setpoint
PR136	EGR position
PR145	Engine speed
PR146	Inlet air flow

GETtheMANUALS.org

Tool Parameter	Diagnostic tool title
PR147	Pedal potentiometer voltage gang 1
PR148	Pedal potentiometer voltage gang 2
PR155	Vehicle speed
PR176	Preheating phase
PR178	Cruise control switch voltage (except VELSATIS Vdiag 04)
PR213	Rail pressure loop difference
PR215	Sensors feed voltage no. 1 (Pedal sensor supply gang 2 and turbocharging pressure sensor).
PR224	Turbocharging pressure sensor voltage
PR225	Air flow sensor voltage
PR342	Pedal sensor power supply gang 1
PR345	Turbocharger wastegate potentiometer voltage
PR346	Turbocharger wastegate valve position
PR364	Fuel flow correction - cylinder 1 (except VELSATIS Vdiag 04)
PR365	Fuel flow correction - cylinder 4 (except VELSATIS Vdiag 04)
PR405	Fuel flow correction - cylinder 2 (except VELSATIS Vdiag 04)
PR406	Fuel flow correction - cylinder 3 (except VELSATIS Vdiag 04)
PR407	Fuel flow correction - cylinder 5 (except VELSATIS Vdiag 04)
PR408	Fuel flow correction - cylinder 6 (except VELSATIS Vdiag 04)

GETtheMANUALS.org

NOTES	Commands are run to check that certain components are working properly or to carry out a replacement.

Tool command	Diagnostic tool title
RZ007	Fault memory
AC029	High pressure circuit sealing test (except VELSATIS Vdiag 04)
AC031	No. 3 immersion-heater relay
AC037	Preheating relay
AC038	Low-speed fan assembly relay
AC039	High-speed fan assembly relay
AC047	OBD warning light
AC063	Heating element no. 1 relay
AC064	Heating element no. 2 relay
AC068	Injection fault warning light
AC069	Severe injection fault warning light
AC079	Actuator static test
VP007	Decrease idling speed
VP011	Increase idling speed
VP010	Enter VIN
VP036	Fuel supply inhibited
VP037	Lift fuel supply inhibition

GETtheMANUALS.org

AC029	HIGH PRESSURE CIRCUIT SEAL TEST

NOTES	**This command is not available on VELSATIS Vdiag 04.** Ignition on, engine off.

Test condition:
– engine running at idling speed,
– engine temperature greater than **80 ˚C**
– automatic transmission in neutral
– accelerator pedal signal **0 %**,
– vehicle speed **0 mph**.
The test lasts for **60 seconds**, the engine speed will reach **2000 rpm** and the rail pressure will reach a minimum of **1450 bar**.
Carry out a visual inspection of the high pressure injection circuit to detect any fuel leaks.

GETtheMANUALS.org

AC031	HEATING ELEMENT NO. 3 RELAY

NOTES	**No fault should be present or stored:** Carry out this fault finding procedure in the event of a malfunction detected in the actuator control menu or a fault in the passenger compartment heating/demisting system. Consult the **Wiring Diagrams** Technical Note for your vehicle to locate the fuses and relays (see **Technical Note 8247 or 8248, Wiring diagrams, 777**).

If heating element no. 3 relay does not operate during command **AC031**.
Check the connections of heating element no. 3 relay mounting.
Check the engine management computer connections.
Repair if necessary.

If the fault is still present, check as follows that this relay is controlled by the engine management computer:
– disconnect the heating element no. 3 relay, place the **50 Ω** and **100 Ω** resistor on its mounting in place of the coil and connect a voltmeter:
  positive terminal to **+ 12 V** battery,
  negative terminal on **track 37** of the heating element no. 3 relay mounting.
– clear the fault and run command **AC031**.
– if the voltmeter shows the correct battery voltage, replace heating element no. 3 relay.
– If the voltmeter does not indicate the battery voltage, contact your Techline.

If heating element no. 3 relay operates with command AC031, but there is still a passenger compartment heating/demisting fault. Check using the wiring diagram:
– the conformity of the heating element fuse,
– the presence of the **+ 12 V** battery feed on **track 35** of the heating element no. 3 relay mounting,
– the conformity of the heating element no. 3 relay,
– the conformity of the heating element resistance,
– the presence of earth at the water chamber (heating element mounting).
– Also check the level of the cooling circuit and that there are no leaks.
Carry out the necessary repairs.

GETtheMANUALS.org

AC037	PREHEATING RELAY

NOTES	This command is only carried out if the fault **DF186 Heater plugs circuit**, or **DF262 and DF263 Heater plugs 1 and 2 group circuit** is present or stored and if no other fault is present. Consult the **Wiring Diagrams** Technical Note for your vehicle to locate the fuses and relays (**Technical Note 8247 or 8248, Wiring diagrams, 777**).

Before applying the following fault finding procedure, check that the battery voltage is not below 12 V.

Step 1:
Using a multimeter fitted with a current clamp, group the 4 heater plug supply wires together.
Control the preheating relay using command **AC037** and measure the current used by the heater plugs.
If the current consumed is not between **60 A** and **80 A**, go to step 2.

Step 2:
Check the connections on the preheating unit, heater plugs and diesel computer.
Repair if necessary.
Measure **the resistance** of the heater plugs.
If the resistance is greater than **30 Ω**, replace the faulty plugs.

Check the **continuity** and **absence of interference resistance** of the following connections:

Pre-postheating unit, white connector, **track 1**	→	Heater plug no. 1 **track 1**
Pre-postheating unit, purple connector, **track 1**	→	Heater plug no. 2 **track 1**
Pre-postheating unit, white connector, **track 2**	→	Heater plug no. 3 **track 1**
Pre-postheating unit, purple connector, **track 2**	→	Heater plug no. 4 **track 1**
Pre-postheating unit, white connector, **track 6**	→	Heater plug no. 5 **track 1**
Pre-postheating unit, purple connector, **track 6**	→	Heater plug no. 6 **track 1**

Check the condition of the **F12 (70A)** fuse which supplies the preheating unit. Replace it if necessary.
Then check for **+ 12 V** on **track 3** of the preheating relay.

Check the **continuity** and **absence of interference resistance** of the following connections:

Diesel computer **track A 19**	→	Pre-postheating unit **green connector, track 8**
Diesel computer **track A 49**	→	Pre-postheating unit **green connector, track 9**
Diesel computer **track A 68**	→	Pre-postheating unit, purple connector, **track 9**

If the fault is still present, replace the pre-postheating unit.

GETtheMANUALS.org

AC038	LOW-SPEED FAN UNIT RELAY

NOTES	**No fault should be present or stored:** Perform this fault finding procedure if a malfunction is detected in the actuator command menu or after an engine cooling system or air conditioning fault.' Consult the **Wiring Diagrams** Technical Note for your vehicle to locate the fuses and relays (**Technical Note 8247 or 8248, Wiring diagrams, 777**).

If the low speed fan unit relay does not operate when command **AC038** is run:
Check the low speed fan relay mounting and the connections of the engine management computer.
Repair if necessary.

If the fault is still present, check that the relay is actuated by the engine management computer as follows:
– Disconnect the "low speed fan unit" relay and place a resistor of **50 Ω** to **100 Ω** on the relay mounting in place of the coil and link up a voltmeter as follows:
  positive terminal to **+ 12 V** battery,
  negative terminal on **track 11** of the "low-speed fan unit relay" mounting.
– clear the fault and run command **AC038**,
– if the voltmeter indicates the battery voltage, replace the relay,
– If the voltmeter does not indicate the battery voltage, contact your Techline.

Check that the low speed fan unit relay **coil** is not cut and that the contacts are operational.
Replace the relay if necessary.

If the "low speed fan unit" relay operates but there remains a fan unit triggering fault, check the following using the wiring diagram:
– the conformity of the fan unit fuse,
– the conformity of the "low speed fan unit" relay,
– the conformity of the low speed resistance,
– Check the **continuity, insulation from + 12 V and the absence of interference resistance** of the following connection:

Diesel computer **track A 18** → Low speed fan relay **track 11**

– check for **insulation from earth, continuity and absence of interference resistance** on the following connections:

Diesel computer **track A 1** → Low speed fan relay **track 10**

Diesel computer **track A 2** → Low speed fan relay **track 10**

Carry out the necessary repairs.

GETtheMANUALS.org

AC039	HIGH-SPEED FAN ASSEMBLY RELAY

NOTES	**No fault should be present or stored:** Perform this fault finding procedure if a malfunction is detected in the actuator command menu or after an engine cooling system or air conditioning fault.' Consult the **Wiring Diagrams** Technical Note for your vehicle to locate the fuses and relays (**Technical Note 8247 or 8248, Wiring diagrams, 777**).

If the high speed fan unit relay does not operate when command **AC039** is run:
Check the high speed fan unit relay mounting and the connections of the engine management computer.
Repair if necessary.

If the fault is still present, check that the relay is actuated by the engine management computer as follows:
– disconnect the "high speed fan assembly" relay, mount a resistor of **50 Ω** to **100 Ω** on the relay mounting in place of the coil, and connect a voltmeter as follows:
  positive terminal to **+ 12 V** battery,
  negative terminal on **track 11** of the "high speed fan assembly" relay mounting,
– clear the fault and run command **AC039**
– if the voltmeter indicates the battery voltage, replace the relay,
– If the voltmeter does not indicate the battery voltage, contact your Techline.

Check that the high speed fan unit relay **coil** is not cut and that the contacts are operational.
Replace the relay if necessary.

If the "high-speed fan unit" relay is actuated, but the fan still does not trigger, check the following using the wiring diagram:
– the conformity of the fan unit fuse,
– the conformity of the "high speed fan unit" relay,
– the conformity of the low speed resistance,
– Check the **insulation from + 12 V, continuity, and the absence of interference resistance** of the following connection:

Diesel computer **track A 38** → **track 7** of the fan assembly relay

Fan unit relay **track 7** → High speed relay **track 60**

– check for **insulation from earth, continuity and absence of interference resistance** on the following connections:

Diesel computer **track A 1** → Fan unit relay **track 6**

Fan unit relay **track 6** → High speed fan relay **track 62**

Diesel computer **track A 2** → Fan unit relay **track 6**

Fan unit relay **track 6** → High speed fan relay **track 62**

Carry out the necessary repairs.

GETtheMANUALS.org

AC063	HEATING ELEMENT RELAY NO. 1

NOTES	**No fault should be present or stored:** Carry out this fault finding procedure in the event of a malfunction detected in the actuator control menu or a fault in the passenger compartment heating/demisting system. Consult the **Wiring Diagrams** Technical Note for your vehicle to locate the fuses and relays (see **Technical Note 8247 or 8248, Wiring diagrams, 777**).

If the heating element no. 1 relay does not operate during command **AC063**:
Check the connections of the heating element no. 1 relay mounting.
Check the engine management computer connections.
Repair if necessary.

If the fault is still present, check as follows that this relay is controlled by the engine management computer:
– Disconnect the heating element no. 1 relay, place the **50 Ω** and **100 Ω** resistor on its mounting in place of the coil and connect a voltmeter:
  positive terminal to **+ 12 V** battery,
  negative terminal on **track 65** of the heating element no. 1 relay mounting,
– clear the fault and run command **AC063**,
– if the voltmeter shows the correct battery voltage, replace the heating element no. 1 relay.
– If the voltmeter does not indicate the battery voltage, contact your Techline.

If heating element no. 1 relay operates with command **AC063**, but there is still a passenger compartment heating/demisting fault. Check using the wiring diagram:
– the conformity of the heating element fuse,
– the presence of the **+ 12 V** battery on **track 63** of the heating element no.1 relay mounting,
– the conformity of the heating element no. 1 relay,
– the conformity of the heating element resistance,
– the presence of earth at the water chamber (heating element mounting).
– Also check the level of the cooling circuit and that there are no leaks.
Carry out the necessary repairs.

GETtheMANUALS.org

AC064	heating element RELAY NO. 2

NOTES	**No fault should be present or stored:** Carry out this fault finding procedure in the event of a malfunction detected in the actuator control menu or a fault in the passenger compartment heating/demisting system. Consult the **Wiring Diagrams** Technical Note for your vehicle to locate the fuses and relays (see **Technical Note 8247 or 8248, Wiring diagrams, 777**).

If heating element no. 2 relay does not operate during command **AC064**.
Check the connections of heating element no. 2 relay mounting.
Check the engine management computer connections.
Repair if necessary.

If the fault is still present, check as follows that this relay is controlled by the engine management computer:
– disconnect the heating element no. 2 relay, place the **50 Ω** and **100 Ω** resistor on its mounting in place of the coil and connect a voltmeter:
  positive terminal to **+ 12 V** battery,
  negative terminal on **track 3** of the additional heater no. 2 relay mounting,
– clear the fault and run command **AC064**.
– if the voltmeter shows the correct battery voltage, replace heating element no. 2 relay.
– If the voltmeter does not indicate the battery voltage, contact your Techline.

If heating element no. 2 relay operates with command **AC064**, but there is still a passenger compartment heating/demisting fault. Check using the wiring diagram:
– the conformity of the heating element fuse,
– the presence of the **+ 12 V** battery feed on **track 2**of the heating element no. 2 relay mounting,
– the conformity of the heating element relay no. 2,
– the conformity of the heating element resistance,
– the presence of earth at the water chamber (heating element mounting).
– Also check the level of the cooling circuit and that there are no leaks.
Carry out the necessary repairs.

GETtheMANUALS.org

AC068	INJECTION FAULT WARNING LIGHT

NOTES	Perform this fault finding in the event of a malfunction detected in the actuator command menu.

With the ignition on and the engine stopped, the **SERVICE** injection fault warning light should flash and the message **Check injection** be displayed on the instrument panel.

Check the instrument panel connections.
Check the engine management computer connections.
Repair if necessary.
Using the wiring diagram.
– check the **continuity and absence of interference resistance** on the following connection:

Diesel computer **track A 67** ⟶ Transparent connector on the instrument panel **track 16**

– Check for **+ 12 V** battery on **track 4** of the instrument panel black connector.

If the fault is still present, check that the warning light is actuated by the engine management computer as follows:
Disconnect the connector from the instrument panel and connect a voltmeter as follows:
– positive terminal on **+ 12 V**,
– negative terminal on **track 24**, transparent connector on the instrument panel.
Activate the warning light using command **AC068**.

- If the voltmeter shows the battery voltage, then check the instrument panel. Carry out the necessary repairs.
- If the voltmeter does not indicate the battery voltage, contact your Techline.

GETtheMANUALS.org

AC069	SEVERE INJECTION FAULT WARNING LIGHT

NOTES	Perform this fault finding in the event of a malfunction detected in the actuator command menu.

With the ignition on and the engine stopped, the **STOP** serious injection fault warning light should flash and the message **Injection fault: stop the engine** be displayed on the instrument panel.

Check the instrument panel connections.
Check the engine management computer connections.
Repair if necessary.
Using the wiring diagram.
– check the **continuity and absence of interference resistance** on the following connection:

Diesel computer **track A 67** ⟶ Transparent connector on the instrument panel **track 16**

– Check for **+ 12 V** battery on **track 4** of the instrument panel black connector.

If the fault is still present, check that the warning light is actuated by the engine management computer as follows:
Disconnect the connector from the instrument panel and connect a voltmeter as follows:
– positive terminal on **+ 12 V**,
– negative terminal on **track 24**, transparent connector on the instrument panel.
Activate the warning light using command **AC069**.

- If the voltmeter shows the battery voltage, then check the instrument panel. Carry out the necessary repairs.
- If the voltmeter does not indicate the battery voltage, contact your Techline.

GETtheMANUALS.org

AC079	ACTUATOR STATIC TEST

NOTES	Ignition on, engine off.

This command allows you to display faults on these actuators (if fault present) without starting the engine.
The diesel computer will carry out the following electrical checks:

- **turbocharger solenoid valve,**
- **EGR valve,**
- **the two rail pressure regulation solenoid valves,**
- **The 6 injectors.**

GETtheMANUALS.org

VP036	INHIBIT FUEL SUPPLY

NOTES	Ignition on, engine off.

This command allows the injectors to be locked, so that starting is not possible.
The command **VP036** enables the cylinder compression to be checked in complete safety.
Run command **VP036** and perform a vehicle starting sequence.
Check the cylinder compressions then, once this is done, reestablish control of the injectors using command **VP037 "Stop fuel supply inhibition"** or by switching of the ignition for more than **40 seconds**.

GETtheMANUALS.org

VP037	CANCEL FUEL SUPPLY INHIBITION

NOTES	Ignition on, engine off.

The command allows the supply to the injectors to be re-established, following an engine compression test.
Run command **VP037**, and try to start the vehicle.
If the vehicle does not start, start the procedure again.

GETtheMANUALS.org

NOTES	Only check the customer complaint after performing a complete check with the **diagnostic tool**.

THE ENGINE DOES NOT TURN OVER WHEN THE STARTER IS OPERATED	→ **ALP1**
THE ENGINE TURNS OVER TOO SLOWLY WHEN THE STARTER IS OPERATED	→ **ALP1**
THE ENGINE TURNS OVER BUT DOES NOT START	→ **ALP2**
THE ENGINE STARTS BUT DOES NOT ACCELERATE OR STALLS	→ **ALP2**
ENGINE BUCKING	→ **ALP3**
ROUGH IDLE	→ **ALP4**
OVERHEATING	→ **ALP5**
THE ENGINE DOES NOT REACH ITS OPERATING TEMPERATURE	→ **ALP6**
THE ENGINE TAKES TIME TO REACH ITS OPERATING TEMPERATURE	→ **ALP6**
EXCESSIVE FUEL CONSUMPTION	→ **ALP7**
LOSS OF POWER	→ **ALP7**
EXCESSIVE OIL CONSUMPTION	→ **ALP8**

GETtheMANUALS.org

NOTES	Only check the customer complaint after performing a complete check with the **diagnostic tool**.

MAJOR VIBRATIONS	→ **ALP9**
HEAVY BLACK SMOKE FROM EXHAUST	→ **ALP10**
HEAVY WHITE SMOKE FROM EXHAUST	→ **ALP11**
HEAVY BLUE SMOKE FROM EXHAUST	→ **ALP12**
NO DIALOGUE WITH ENGINE MANAGEMENT COMPUTER	→ **ALP13**

GETtheMANUALS.org

ALP1	**The engine does not turn over when the starter is operated** **The engine does not turn over when the starter is operated**

NOTES	In the event of a fault, perform a **multiplex network test** using the diagnostic tool, then if the test is OK, apply the conformity check before any operation on the diesel injection system.

Check **the battery charge**.
Check **the condition of the battery connections**.
Check that there is no corrosion on the engine earth straps.
Check for the presence of faults with the diagnostic tool, deal with these first.
Repair if necessary.

Check the starter motor connections.
Check that a **+ 12 V** voltage is present on the starter motor terminal during starter action.
Check starter motor operation.
Repair if necessary.

Check that oil is present in the crankcase to avoid any engine seizing.
Check that the crankshaft is not locked by performing a crankshaft rotation.

Permanent seizing may be due to:

1) Seizure of equipment driven by the accessories belt: remove the accessories belt and check that all the equipment driven by the accessories belt is rotating correctly.
2) Seizure of the crankshaft itself, due to filling of the cylinders with a fluid (diesel fuel, coolant, etc.): remove the heater plugs to check that there is no fluid inside the combustion chambers.
   The presence of diesel fuel in the combustion chambers may be due to a permanent opening of the injectors: check that the injector power unit (EDU*) is operating correctly.
   The presence of a fluid such as coolant fluid or engine oil shows failure of the cylinder head gasket or a crack in one of the components forming the cylinder head or the engine cylinders.
2) Destruction of the timing belt, causing damage to the timing system components.
3) Seizure of the automatic transmission: remove the transmission to check whether the flywheel is released again.
5) Damage to moving parts requiring replacement of the engine.

*EDU: Electronic Drive Unit

AFTER REPAIR	Carry out a road test, followed by a check with the fault finding tool.

GETtheMANUALS.org

ALP2	The engine turns over but does not start The engine starts but does not accelerate or stalls

NOTES	In the event of a fault, perform a **multiplex network test** using the diagnostic tool; if this is OK, carry out a **UCH test** and **immobiliser** test.

– Check the operation of the pre-heating plugs.
– Check for fuel in the tank.
– Ensure that the correct fuel is being used. Run **test 12 Fuel conformity check**.

Remove the diesel filter and check its condition.
Check that there is no paraffin crystallised in the low pressure fuel pipes following freezing.
Rinse the fuel circuit and replace the fuel and the diesel filter if necessary.
If metal deposits are present at the bottom of the container, a serious fault in the injection system has occurred.
These particles may have entered the high pressure injection system and may foul the injectors, causing them to seize.
In this case, the entire injection system must be replaced (High Pressure Pump, Injection rail, Injectors, High pressure injector pipe, etc.).

Run fault finding on the diesel injection system using the diagnostic tool, deal with the other faults.

Check the condition of the air inlet circuit and make sure there is no obstruction in the inlet circuit.
Check for possible seizing of the turbocharger shaft.

Inhibit injection using command **VP036 Inhibit fuel supply**.
Measure the rail pressure using the parameter **PR038 Rail pressure** while the starter motor is operated (less than **10 seconds** per test).The pressure should be greater than **170 bar** and the engine speed signal should be greater than **250 rpm** at an air temperature of **20˚C**.
IMPORTANT
If the air temperature is less than **20˚C**, the engine speed signal should not be less than **250 rpm**.

AFTER REPAIR	Carry out a road test, followed by a check with the fault finding tool.

GETtheMANUALS.org

ALP2 CONTINUED	

– Check the valve clearance,
– check the condition of the engine, measure the cylinder compression with a compression gauge.
The compression values recorded for each injector must be the same.
– The minimum compression limit must not be less than **20.4 kg/cm^2**.
(1 bar = 1.0197 kg/cm^2),
– if the compression test reveals a cylinder fault, carry out the necessary repairs,
– if the compression values are OK, check the conformity of the injector assembly using the procedure described in the **Workshop Repair Manual**.

If a mechanical operation has occurred beforehand on the injection pump, check the conformity of the pump pulley fitting (recommendation of target positioning).

For all Vdiags except VELSATIS Vdiag 04:
Check the fuel regulation injector by injector by performing **test: 10 Incorrect injector operation**.
If the customer complaint is still present, replace the injector.

AFTER REPAIR	Carry out a road test, followed by a check with the fault finding tool.

GETtheMANUALS.org

ALP3	Engine hesitation

NOTES	In the event of a fault, perform a **multiplex network test** using the diagnostic tool, then if the test is OK, apply the conformity check before any operation on the diesel injection system.

– Check for fuel in the tank. – Ensure that the correct fuel is being used. Run **test 12 Fuel conformity check**.
Remove the diesel filter and check its condition. Check that there is no paraffin crystallised in the low pressure fuel pipes following freezing. Rinse the fuel circuit and replace the fuel and the diesel filter if necessary. If metal deposits are present at the bottom of the container, a serious fault in the injection system has occurred. These particles may have entered the high pressure injection system and may foul the injectors, causing them to seize. In this case, the entire injection system must be replaced (High Pressure Pump, Injection rail, Injectors, High pressure injector pipe, etc.).
Check the condition of the air inlet circuit and make sure there is no obstruction in the inlet circuit. Check for possible seizing of the turbocharger shaft.
Measure the rail pressure using parameter **PR038 Rail pressure** during the phases of engine hesitation. The rail pressure should have stable values for a stabilised engine speed, and the rail pressure loop difference should not exceed **± 40 bar**. If the fault is still present, run **test 3 Low pressure circuit check**. Rail pressure instability may be due to seizure of the regulation solenoid valves or a failure of the high pressure pump. If the fault is still present, run **test 11 High pressure pump**.
If the fault is still present, run **test 10 Poor injector operation**.

AFTER REPAIR	Carry out a road test, followed by a check with the fault finding tool.

GETtheMANUALS.org

ALP4	Rough idle

NOTES	In the event of a fault, perform a **multiplex network test** using the diagnostic tool, then if the test is OK, apply the conformity check before any operation on the diesel injection system.

– Check for fuel in the tank. – Ensure that the correct fuel is being used. Run **test 12 Fuel conformity check**.
Check the condition of the air inlet circuit and make sure there is no obstruction in the inlet circuit. Check for possible seizing of the turbocharger shaft.
Check the resistance of the exhaust gas recirculation valve and check if the slide of the valve is seized.
Measure the rail pressure using parameter **PR038 Rail pressure** while the engine is running in an unstable manner; the rail pressure should have stable values for a stabilised engine speed, and the rail pressure variation should not exceed **± 40 bar**. Rail pressure instability may be due to seizing of the regulation solenoid valves or a failure of the high pressure pump. Remove the diesel filter and check its condition. Rinse the fuel circuit and replace the fuel and the diesel filter if necessary.
For all Vdiags except VELSATIS Vdiag 04: If the fault is still present, change the regulation solenoid valves or the diesel fuel pump or the injectors. Check status **ET038 Engine**, if **ET038** is **NORMAL**, check the statuses of the following combustion misfires: **ET057 Misfire on cylinder 1,** **ET058 Misfire on cylinder 2,** **E T059 Misfire on cylinder 3,** **ET060 Misfire on cylinder 4,** **ET274 Misfire on cylinder 5,** **ET275 Misfire on cylinder 6** using the diagnostic tool. If one of the misfire statuses is **DETECT** or **PRESENT**, run **TEST 10 Poor injector operation**. If the unstable idle speed fault is still present, check **the condition** and **correct operation** of the diesel fuel pump. Replace or repair if necessary.

***AFTER** REPAIR*	Carry out a road test, followed by a check with the fault finding tool.

GETtheMANUALS.org

ALP5	Overheating

NOTES	In the event of a fault, perform a **multiplex network test** using the diagnostic tool, then if the test is OK, apply the conformity check before any operation on the diesel injection system.

Run fault finding on the injection computer using the diagnostic tool. Deal with all present faults. Using commands **A C038 Low speed fan relay** and **A C039 High speed fan relay** check that the cooling fan speeds are correct. Repair if necessary. Check that the cooling circuit is correctly filled.
Check correct opening of the thermostat (start of opening at **82˚C** - fully open at **88˚C**). For an engine temperature greater than **85˚C** the bottom hose of the cooling radiator should not be cold; replace the thermostat if necessary.
Check that the water pump is operating correctly by checking the presence of a coolant fluid return flow from the expansion bottle. In the event of a fault, check for possible clogging of the return path from the expansion bottle before performing a fault finding test for a water pump failure.
Compare the temperature values given by the injection coolant temperature sensor and the value given by an external temperature sensor. If the values are inconsistent, replace the coolant temperature sensor.
If the fault is still present, rinse the cooling circuit and check that the radiator is not clogged. Clean the front of the radiator with a high pressure cleaner to remove any dirt from the radiator fins. Replace the expansion bottle cap.

***AFTER** REPAIR*	Carry out a road test, followed by a check with the fault finding tool.

GETtheMANUALS.org

ALP6	The engine does not reach its operating temperature The engine takes time to reach its operating temperature

NOTES	In the event of a fault, perform a **multiplex network test** using the diagnostic tool, then if the test is OK, apply the conformity check before any operation on the diesel injection system.

Run fault finding on the injection computer using the diagnostic tool. Process all the present or stored faults.
Check that the engine does reach its operating temperature during motorway driving.
Check that the themoplungers are operating correctly. Check their resistances and check that the 3 thermoplunger relays are supplied using the following commands: **AC063 Thermoplunger no.1 relay,** **AC064 Thermoplunger no.2 relay,** **AC031 Thermoplunger no.3 relay.** In the event of faults, check the operation of the thermoplunger plug relays, check the connection between the relay coils and the diesel computer, check the power supply to the relay terminals, and check the **continuity** of the power lines between the thermoplungers and their relays.
Engine cold or stopped for at least **6 hours**. Compare the temperature values given by the injection coolant temperature sensor and the value given by an external temperature sensor. If the values are inconsistent, replace the coolant temperature sensor.
If the value supplied by the injection coolant temperature sensor is correct, replace the thermostat.
Refer to **Technical Note 3175A, Cooling system, ALP7 There is no heating inside the vehicle**.

***AFTER** REPAIR*	Carry out a road test, followed by a check with the fault finding tool.

GETtheMANUALS.org

ALP7	Excessively high fuel consumption Loss of power

NOTES	In the event of a fault, perform a **multiplex network test** using the diagnostic tool, then if the test is OK, apply the conformity check before any operation on the diesel injection system.

IMPORTANT In the event of the engine overheating (Oil temperature > 123˚C), the computer deliberately limits the engine power and vehicle speed without illuminating a warning light, see the interpretation of fault **DF769 Oil temperature**.
Check conformity of the tyres and their pressure.
Check that the vehicle is not equipped with external devices affecting its aerodynamics.
Look for possible fuel leaks: – Run **test 3 Low pressure circuit check**. Repair if necessary. – Run command **AC029 High pressure circuit sealing test (Except VELSATIS Vdiag 04)**. Carry out a visual inspection of the high pressure injection circuit to detect any fuel leaks. Repair if necessary.
Check the condition of the air filter and replace it if necessary.
Check that the entire inlet circuit is in good condition, free of leaks and is not clogged (hose and intercooler, air flowmeter clogging), apply **test 5 Air flowmeter**.
Check the air flow value using parameters **P R146 Inlet air flow** and **P R136 EGR valve position**. At a speed of **700 rpm** and with a coolant temperature of **80˚C**, check that the air flow is **42 kg/h ± 4.2 kg/h** at an EGR valve position of **3.2 mm** and **72.3 kg/h ± 7.2 kg/h** at an EGR valve position of **0 mm**.
Check that the engine does reach its operating temperature during motorway driving.
Reset the trip computer and perform a new test on the motorway and then in town, and estimate the vehicle's consumption from its average speed.

***AFTER** REPAIR*	Carry out a road test, followed by a check with the fault finding tool.

GETtheMANUALS.org

ALP7 CONTINUED	

Check that the exhaust pipe is not blocked, apply **test 1 Exhaust system check**.
Check that the turbocharger operates correctly. – Run **test 7 Variable geometry turbocharger command** and – Run **test 8 Turbocharger rotating part**. Repair if necessary.
If the vehicle lacks power, run **test 11 High pressure pump**.
Run **TEST 10 Poor injector operation (Except VELSATIS Vdiag 04)**.
– Check the valve clearance, – check the condition of the engine, measure the cylinder compression with a compression gauge. The compression values recorded for each injector must be the same. – The minimum compression limit must not be less than **20.4 kg/cm^2**. **(1 bar = 1.0197 kg/cm^2)** – If the compression test reveals a cylinder fault, carry out the necessary repairs. – if the compression values are OK, check the conformity of the injector assembly using the procedure described in the **Workshop Repair Manual**.

***AFTER** REPAIR*	Carry out a road test, followed by a check with the fault finding tool.

GETtheMANUALS.org

ALP8	Excessive oil consumption

NOTES	In the event of a fault, perform a **multiplex network test** using the diagnostic tool, then if the test is OK, apply the conformity check before any operation on the diesel injection system.

Check that the oil level is correct, and remove the excess if necessary. Check for possible external leaks. Repair if necessary.
Check the air circuit: – the condition of the air filter, – run **test 4 Air inlet circuit and turbocharging check**.
Check that the turbocharger operates correctly. Run **test 8 Turbocharger rotating part**.
Check the sealing of the engine block and turbocharger lubrication pipes, and the pipes and oil cooler. Repair if necessary.
Check that the oil breather pipes are not crushed or clogged.
Remove the inlet tract from the turbocharger inlet and outlet, and check that there is not a large quantity of oil in the turbocharger or in the inlet hoses. – A large quantity of oil in the turbocharger inlet hose is due to extensive oil evacuation via the oil breather (engine wear or breather clogged, etc.), – A large quantity of oil in the turbocharger outlet hose indicates failure of the turbine shaft sealing ring. Replace the turbocharger if necessary.
Check the correct condition of the heater plugs. Repair or replace the faulty components, if necessary.

***AFTER** REPAIR*	Carry out a road test, followed by a check with the fault finding tool.

GETtheMANUALS.org

ALP9	Major vibration

NOTES	In the event of a fault, perform a **multiplex network test** using the diagnostic tool, then if the test is OK, apply the conformity check before any operation on the diesel injection system.

Run fault finding on the injection computer using the diagnostic tool. Process all the present or stored faults.
Check the condition and tightness of the engine mountings.
Check the accessories drive pulley. The rubber mounting bushes should be in perfect condition and the pulley should not warp during rotation; replace if necessary.
Remove the accessories belt and start the engine. If the vibration has disappeared, look for the faulty component among the accessories driven by the belt.
Remove the starter motor and check that the automatic transmission torque converter is correctly tightened.
Check timing belt adjustment.
If the fault is still present, change the regulation solenoid valves or the diesel fuel pump or the injectors. **For all Vdiags except VELSATIS Vdiag 04:** Check status **ET038 Engine**, if **ET038** is **NORMAL**, check the statuses of the following combustion misfires: **ET057 Misfire on cylinder 1,** **ET058 Misfire on cylinder 2,** **E T059 Misfire on cylinder 3,** **ET060 Misfire on cylinder 4,** **ET274 Misfire on cylinder 5,** **ET275 Misfire on cylinder 6** using the diagnostic tool. If one of the misfire statuses is **DETECT** or **PRESENT**, run **TEST 10 Poor injector operation**. If the unstable idle speed fault is still present, check **the condition** and **correct operation** of the diesel fuel pump. Replace or repair if necessary.

***AFTER** REPAIR*	Carry out a road test, followed by a check with the fault finding tool.

GETtheMANUALS.org

ALP10	Heavy black smoke from exhaust

NOTES	If the vehicle has not been used for a long time, let the engine reach its operating temperature and, after first checking the coolant fluid level, carry out a road test.

Run fault finding on the diesel injection using a diagnostic tool. Deal with any fault detected.
Check that the whole inlet system is neither clogged nor leaky. Check the condition of the air filter and replace if necessary.
Check that the exhaust gas recirculation valve is not stuck open. Replace it, if necessary.
Remove the inlet hose from the turbocharger inlet and check that the turbine shaft rotates very freely. Check that the turbocharger axial and lateral play values are within tolerances.
Check for possible seizing of the turbocharger wastegate in the open position, and replace the turbocharger if necessary (turbocharger seizing may be due to poor lubrication of the bearings: check for possible clogging of the lubrication circuit and check the engine oil pressure). If the fault is still present, run **test 10 Incorrect operation of the injectors**.

***AFTER** REPAIR*	Carry out a road test, followed by a check with the fault finding tool.

GETtheMANUALS.org

ALP11	Heavy white smoke from exhaust

NOTES	If the vehicle has not been used for a long time, let the engine reach its operating temperature and, after first checking the coolant fluid level, carry out a road test.

Check with the customer that the vehicle has not overheated recently.
Check the coolant fluid level. A sharp drop in this level is due to a cooling circuit leak or to fluid consumption by the engine at the cylinder head gasket. Apply **Technical Note 3175A, Cooling circuit, ALP3 Emission of smoke from the exhaust, white smoke, engine warm**.
Run the engine at idle speed until its operating temperature is reached, with the expansion bottle cap in place. If the vehicle emits white smoke from the exhaust, slowly loosen the expansion bottle cap to reduce the pressure in the cooling circuit. If the vehicle stops emitting smoke, one of the cylinder head gaskets is damaged. Replace both the cylinder head gaskets.
If not, check that there is no water in the diesel filter. Ensure that the correct fuel is being used. Run **test 12 Fuel conformity check**.

***AFTER** REPAIR*	Carry out a road test, followed by a check with the fault finding tool.

GETtheMANUALS.org

ALP12	Heavy blue smoke from exhaust

NOTES	If the vehicle has not been used for a long time, let the engine reach its operating temperature and, after first checking the coolant fluid level, carry out a road test.

Run fault finding on the diesel injection using a diagnostic tool.
Deal with any fault detected.

Top up the oil level, and if the level is too high remove the excess.
If the level is too low, refer to **ALP8 Excessive oil consumption**.

Check that the oil breather pipes are not crushed or clogged.

Remove the inlet hose from the turbocharger inlet and outlet.
Check that there is not a large quantity of oil in the turbocharger or the inlet hoses.

- A large quantity of oil in the turbocharger inlet hose is due to extensive oil evacuation via the oil breather (engine "sealing ring" wear or breather clogged, etc.).
- A large quantity of oil in the turbocharger outlet hose indicates failure of the turbine shaft sealing ring. Replace the turbocharger if necessary.
- if the inlet system is clean, a small quantity of oil deposited on the walls of the inlet hoses is acceptable. The oil consumption is undoubtedly due to an engine internal failure, e.g. valve stem seal, oil scraper ring, etc.

***AFTER** REPAIR*	Carry out a road test, followed by a check with the fault finding tool.

GETtheMANUALS.org

ALP 13	No dialogue with engine management computer

NOTES	In the event of a fault, perform a **multiplex network test** using the diagnostic tool.

Check that the tool is not the cause of the fault by trying to establish dialogue with a computer on another vehicle.
If the tool is not at fault, and dialogue cannot be established with any other computer on the same vehicle, it may be that a faulty computer is disrupting **line K**.
Trace which one through a process of elimination, successively disconnecting each computer.
Also check the battery voltage following interpretation of parameter **PR071 Computer supply voltage**.

Check the condition of the engine fuses in the engine fuse and relay box; refer to the **Wiring Diagrams** Technical Note for the vehicle.
Check the computer power supply on the connector side.
Check the earth connections.
Check the computer connector (crimping of wires to terminals, and condition of terminals).
If the connection or connections are faulty and if there is a repair procedure (see **Technical Note 6015A, Electrical wiring repair, Wiring: Precautions for repair**), repair the wiring, otherwise replace the wiring.

Check the supply to the diagnostic socket:
+ Before ignition feed on **track 24**.
+ After ignition feed on **tracks 1 and 2**.
Earth on **tracks 4** and **5**.
Ensure **the continuity** and **the insulation** of the following connection:

Diesel computer **track A 50** ⟶ **track 7** of the diagnostic socket

If the connection or connections are faulty and if there is a repair procedure (see **Technical Note 6015A, Electrical wiring repair, Wiring: Precautions for repair**), repair the wiring, otherwise replace the wiring.
If dialogue is still impossible after these checks, replace the engine management computer.
If necessary, modify the configuration of the new computer to match the equipment options available on the vehicle.

***AFTER** REPAIR*	Carry out a road test, followed by a check with the fault finding tool.

GETtheMANUALS.org

EXHAUST SYSTEM CHECK	→ TEST1
LOW PRESSURE CIRCUIT TEST	→ TEST3
TURBOCHARGING AND AIR INLET CIRCUIT TEST	→ TEST4
AIR FLOW SENSOR	→ TEST5
VARIABLE GEOMETRY TURBOCHARGER CONTROL	→ TEST7
ROTATING PART OF TURBOCHARGER	→ TEST8
POOR INJECTOR OPERATION	→ TEST10
HIGH PRESSURE PUMP	→ TEST11
FUEL CONFORMITY CHECK	→ TEST12

GETtheMANUALS.org

TEST1	Exhaust system check

Engine stopped: Check that the silencer outlet is not blocked.
Repair or replace the silencer, if necessary.

YES

Check the seal of the exhaust manifold on the contact surface between the turbocharger and the exhaust manifold.
Is the seal in order?

NO → Repair or replace the faulty part.

YES

Loosen the catalytic pre-converter at the turbocharger outlet.
Place a wooden block between the two parts.
Start the vehicle and check if the engine runs better.
Is the engine running normally?

NO → The exhaust pipe is correct.
Restart fault finding.

YES

Retighten the catalytic pre-converter.
Loosen and decouple or cut the catalytic converter at the catalytic pre-converter outlet.
Place a wooden block between the two parts if necessary.
Start the vehicle and check if the engine runs better.
Is the engine running normally?

NO → Replace the catalytic pre-converter.

YES

(A)

***AFTER** REPAIR*	Carry out a road test, followed by a check with the fault finding tool.

GETtheMANUALS.org

TEST1 CONTINUED	

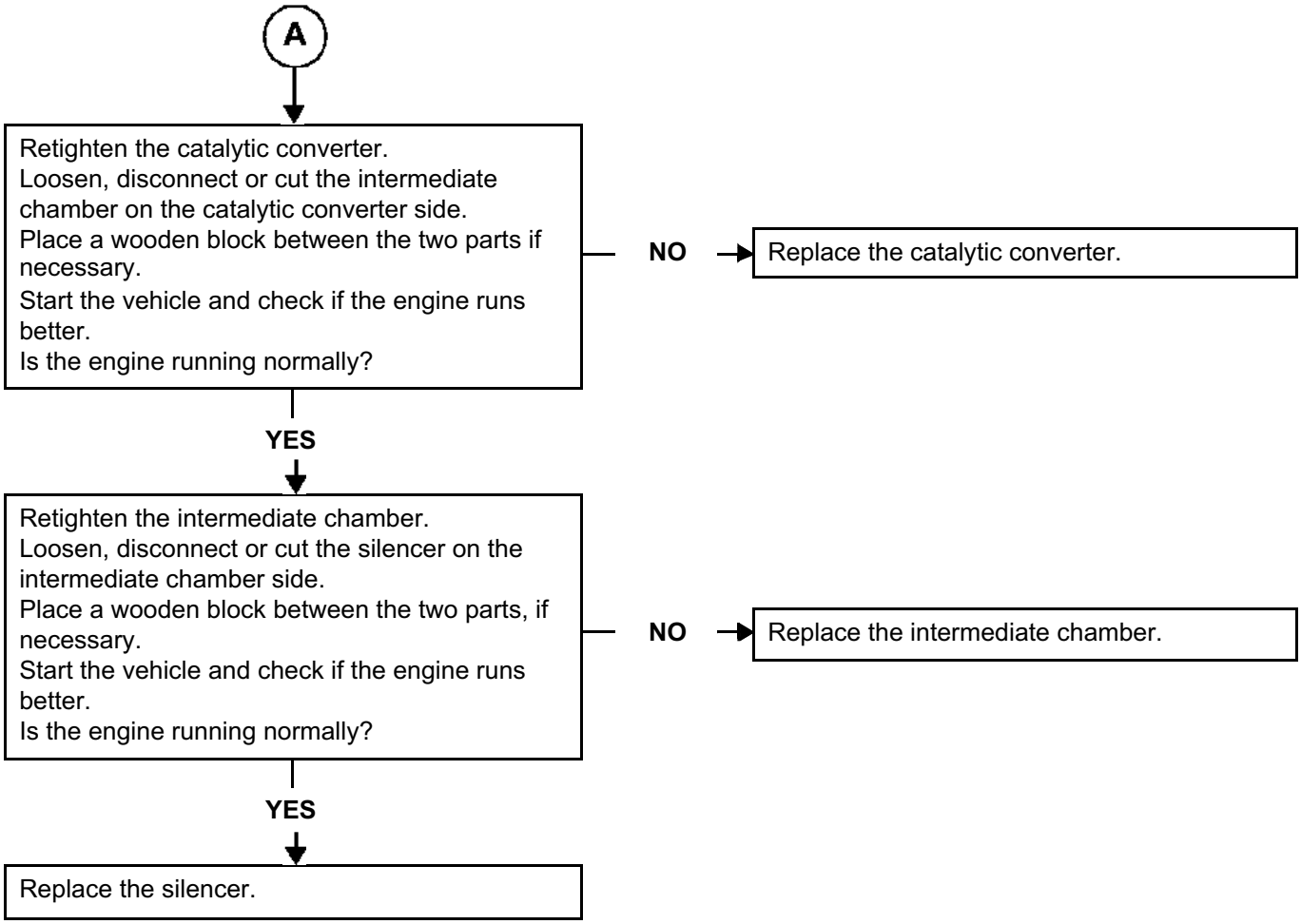

AFTER REPAIR	Carry out a road test, followed by a check with the fault finding tool.

GETtheMANUALS.org

TEST3	Low pressure circuit check

Ensure that the correct fuel is being used.
Run **test 12 Fuel conformity check**.

↓

Check the condition of all the low pressure diesel fuel pipes from the tank to the injection pump (the pipes should not be pinched).

↓

Check the condition of the priming bulb, and that it is working properly. Perform repairs if necessary and continue the test.

↓

If the fault is still present with a low fuel level, check the consistency of the actual fuel level and that indicated on the instrument panel.
– The transfer pump is supplied via a venturi valve located beneath it.
Check that the opening of the venturi is not blocked by dirt contained in the fuel tank.
Check the priming of the low pressure diesel circuit.

↓

Check the fuel filter:
- Conformity of the fuel filter (correct part number and RENAULT filter).
- Positioning and amount of clogging in the filter element.
- Positioning and condition of the seals.

↓

(A)

***AFTER** REPAIR*	Carry out a road test, followed by a check with the fault finding tool.

GETtheMANUALS.org

TEST3 CONTINUED	

Fuel supply of the injection system with additional tank.

This operation aims to detect possible faults in the low pressure supply system of a vehicle by replacing it entirely with an additional tank.

Mode:

– Disconnect the diesel fuel supply pipe at the fuel filter inlet and seal it with a plug.
– Connect a pipe to the fuel filter inlet and insert the other end into a **clean** container which is approximately **5 litres** in volume.
– Disconnect the diesel return pipe to the injector and high pressure pump outlet union, and use a plug to block it.
– Connect a transparent pipe to the injector and high pressure pump outlet union, and insert the other end into the container.
– Fill the container with **clean** diesel fuel.
– Start the engine and let the system drain itself of its air (there must not be any air bubbles in the return pipe).

Is the customer complaint still present?

→ Low pressure circuit correct.
Reconnect the different low pressure circuit pipes and restart fault finding.

Are the low pressure circuit connections in order and in good condition?

→ Carry out the necessary repairs.
Low pressure circuit correct.
Reconnect the different low pressure circuit pipes and restart fault finding.

Low pressure circuit correct.
Restart fault finding.
END OF TEST.

***AFTER** REPAIR*	Carry out a road test, followed by a check with the fault finding tool.

GETtheMANUALS.org

TEST4	Turbocharging and air inlet circuit check

Engine stopped: Check the low and high pressure air circuits for **leaks** (air leaks in or out, upstream or downstream of the turbocharger).

→ Check the parts that are abnormally greasy of the circuit and reveal a lack of tightness.
Check:
- the condition and fitting of the ducts (foreign bodies, clogged, disconnected, pinched, broken, holed, cut, tightness of the mounting bolts, etc.).
- the present and tightening of the clamps.
- the turbocharger pressure sensor is mounted correctly on the manifold.
- The pipes and the take-off point between the air duct and the turbocharging sensor.

Carry out the necessary repairs.

↓

Checking the air filter.

→ Check:
- That the air filter unit inlet and outlet are not blocked.
- That air filter unit is in good condition and is fitted correctly (not dislodged, broken, pierced; condition and positioning of the foam, etc.).
- The cleanliness, conformity and the absence of deformation of the filter element.
- The air flowmeter, run **test 5 Air flowmeter**.

←

Check:
- the condition of the damper valve (damper),
- the condition of the swirl flaps,
- the tightness of the mounting bolts,

Carry out the necessary repairs.
Replace if necessary.

→ Carry out a visual inspection of the EGR circuit sealing.
Replace if necessary.

←

Check the exhaust, run **test 1 Exhaust system check**.
Carry out the necessary repairs.

↓

→ Check the condition of the intercooler:
- clogging,
- leaks (vehicle stationary, stabilise the engine speed between **3500 rpm** and **4000 rpm** and check that there are no leaks).

Replace if necessary.

↓

Check that the turbocharging pressure sensor take-off point is not blocked.
Replace if necessary.
END OF TEST.

AFTER REPAIR	Carry out a road test, followed by a check with the fault finding tool.

GETtheMANUALS.org

TEST5	Air flowmeter

Contamination of the grille
Visual inspection: remove the flowmeter; there should be no foreign bodies in the grilles (see **illustration no. 110734 test 5 continued**).
Do not clean the grilles using compressed air or any other procedure: this damages the sensors and creates variations from the values displayed on the CLIP tool.
Check the air circuit sealing upstream of the air flowmeter: ducts and air filter unit disconnected or pierced, presence of seals.
Replace the air flowmeter if necessary and clean upstream of this, if necessary.

↓

Damage to electrical components
Visual inspection: remove the flow sensor - the components should not be broken.
Replace the air flowmeter if necessary.

↓

Oxidation of the electrical components
Visual inspection: remove the air flow sensor connector, there should not be any green deposits on the electrical components.
Replace the air flowmeter if necessary.

↓

Clogging of the air flowmeter
Test:

- Check the conformity values, with a warm engine (coolant temperature: **80˚C**).
- During the **first 30 seconds** after starting.
- Engine speed: idling
- Air temperature between **30 and 70˚C**.
- **PR145 ENGINE SPEED = 700 rpm and PR136 EGR POSITION = 3.2 mm:**
  PR146 EGR POSITION = 42 kg/h ± 4.2 kg/h
- **PR145 "ENGINE SPEED" = 700 rpm and PR136 "EGR POSITION" = 0 mm:**
  PR146 EGR POSITION = 72.3 kg/h ± 7.2 kg/h

(To obtain **PR136 EGR POSITION = 0 mm**, depress the accelerator pedal **briefly** and release the pedal while displaying parameter **PR136 EGR position** in the **diagnostic tool** then freeze the image when the parameter **PR136 EGR POSITION = 0 mm**).

- Apply the procedure for **DF056 Air flow sensor circuit** for the checks on the air flowmeter.

Replace the air flowmeter if necessary.
END OF TEST.

***AFTER** REPAIR*	Carry out a road test, followed by a check with the fault finding tool.

GETtheMANUALS.org

TEST5 CONTINUED	

Contamination of the grille

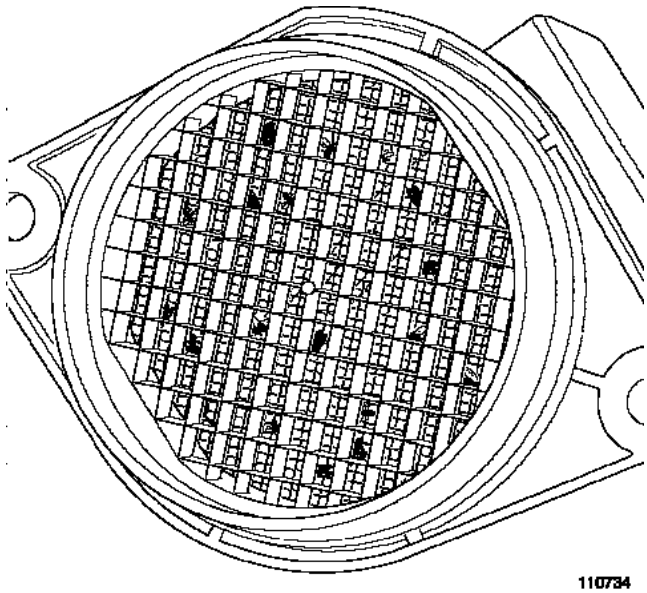

***AFTER** REPAIR*	Carry out a road test, followed by a check with the fault finding tool.

GETtheMANUALS.org

TEST7	Variable geometry turbocharger control

Start the engine and check that:
- **PR346 Turbocharger wastegate valve position ≈ 1.64 ± 0.1 mm**, warm engine,
- **PR345 Turbocharger wastegate potentiometer voltage ≈ 3.9 ± 0.1 V at 20˚C**,
- the variable geometry control moves easily.

↓

Does the variable geometry control move easily? — **NO** → Replace the turbocharger.

YES

↓

Stop the engine and check that:
- **PR346 Turbocharger wastegate valve position ≈ 10 mm at idle speed, < 10 mm during deceleration**,
- **PR345 Turbocharger wastegate potentiometer voltage ≈ 0.45 V with PR346 = 10 mm**,
- the variable geometry control moves easily.

↓

Does the variable geometry control move easily? — **NO** → Replace the turbocharger.

YES

↓

Stop the engine and check that:
- **PR346 Turbocharger wastegate valve position ≈ 10 mm at idle speed, < 10 mm during deceleration**,
- **PR345 Turbocharger wastegate potentiometer voltage ≈ 0.45 V with PR346 = 10 mm**,
- the variable geometry control moves easily.

↓

Continue the turbocharger test with **test 8 Rotating part of turbocharger**.

***AFTER** REPAIR*	Carry out a road test, followed by a check with the fault finding tool.

GETtheMANUALS.org

TEST8	Rotating part of a turbocharger

With the engine cold and stopped, remove the air inlet duct from the turbocharger; check manually if the shaft of the turbine and of the compressor turns.
Does the shaft turn?

NO → Replace the turbocharger.

Seizing of the turbocharger may be caused by poor lubrication of the bearings. Check the lubrication circuit for any blockage and check the engine oil pressure. Apply the procedure described in **Technical Note 3938A, F9Q engine-Turbocharger failure** which can be applied to this engine.

YES

Visually check the condition of the compressor wheel then the turbine wheel (see illustrations **No. 110737 test 8 continued 1 and 110738 test 8 continued 2**).
Are the wheels in good condition?

NO

YES

Manually check the end float of the wheels (see illustration **no. 110880 test 8 continued 3**).
The significant end float is approximately **2 mm**.
Does the turbocharger have too much play in the shaft?

YES → Replace the turbocharger. Apply the procedure described in **Technical Note 3938A, F9Q engine-Turbocharger failure** which can be applied to this engine.

If the moving part is broken: apply the procedure described in **Technical Note 3938A, F9Q engine-Turbocharger failure** which can be applied to this engine.
IMPORTANT
Risk of destroying the new turbocharger and the engine if the air circuit is not cleaned and the oil and its filter are not replaced.

NO

The rotating section is in order.
Is there oil in the exhaust?

NO → **END OF TEST.**

YES

Replace the catalytic pre-converter.

***AFTER** REPAIR*	Carry out a road test, followed by a check with the fault finding tool.

GETtheMANUALS.org

TEST8 CONTINUED 1	

Information:
The operating play of the turbocharger bearings is approximately **25 µm** (micrometers or microns) between the shaft of the turbocharger and the internal mating face of the bearings and **75 µm** between the exterior part of the bearings and the bearing housing.
Risks:
In the event of destruction of the turbocharger bearings, the steel and bronze swarf from this destruction are evacuated through the turbocharger oil to the engine's oil sump. The swarf can, consequently, be returned to the oil circuit via the oil pump, then cause widespread contamination of the engine oil circuit. This causes abnormal wear on the crankshaft bearing bushings, the con rod bearing shells and the camshafts, etc.
In the event of the compressor wheel breaking, parts of the blades may be found in the intercooler or in the air circuit ducts. The turbine wheel could easily be found in the catalytic converter.

Deformed, twisted blade (“soft” foreign body)

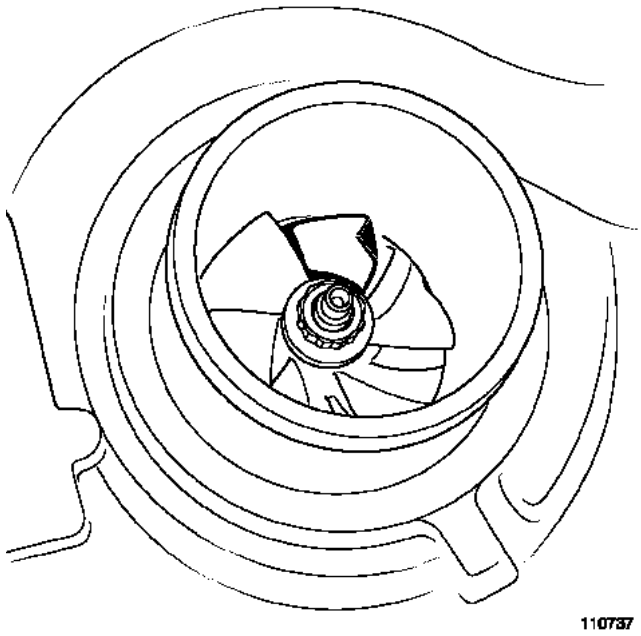

***AFTER** REPAIR*	Carry out a road test, followed by a check with the fault finding tool.

GETtheMANUALS.org

TEST8 CONTINUED 2	

Broken blades (“hard” foreign body)

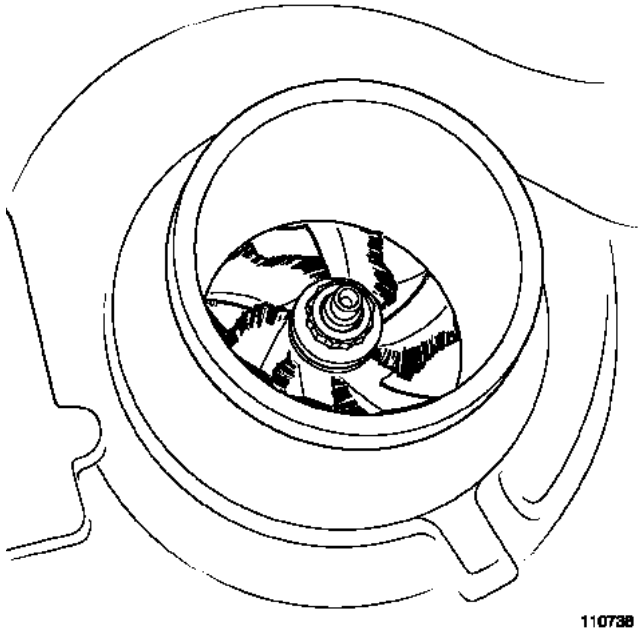

***AFTER** REPAIR*	Carry out a road test, followed by a check with the fault finding tool.

GETtheMANUALS.org

TEST10	Incorrect injector operation

For all Vdiags except VELSATIS Vdiag 04:

PART A

CHECK THE INJECTOR FLOW CORRECTION: (INDIVIDUAL CORRECTION)
– In CLIP, choose the **Fuel circuit** sub-function.
– With the engine idling and the fuel temperature **> 50˚C**, display the flow correction values for each injector (individual correction), i.e.:
PR364 Cylinder no. 1 fuel flow correction;
PR405 Cylinder no. 2 fuel flow correction;
PR406 Cylinder no. 3 fuel flow correction;
PR365 Cylinder no. 4 fuel flow correction,
PR407 Cylinder no. 5 fuel flow correction,
PR408 Cylinder no. 6 fuel flow correction.
The **normal value** for flow correction for an injector is approximately **± 1 mm^3/stroke**. This tolerance may increase with time, but indicates an injector/cylinder fault if it exceeds **± 5 mm^3/stroke**.
1) If at least one of these values is > + 5 mm^3/stroke
– If the compression value recorded with the compression gauge reveals a faulty cylinder, carry out the necessary repairs and apply **Part C**.
– If the customer complaint is still present, replace the injector.
– Check the valve clearance.
– See paragraph **Part B**, for confirming the fault finding.
2) If at least one of these values is < - 5 mm^3/stroke
– Check the level and condition of the engine oil.
– Remove the injector which has the biggest negative value.
– Check the valve clearance.
– Replace the injector.
– See paragraph **Part B**, for confirming the fault finding.
3) If at least one of these values does not stabilise (at least 30 seconds after starting and when warm)
– Check the low pressure circuit with **test 3 Low pressure circuit check**.
– Ensure that the correct fuel is being used. Run **test 12 Fuel conformity check**.
– See paragraph **Part B**, for confirming the fault finding.

Note:
Before replacing an injector, check that its sealing washer is in place and in order.

IMPORTANT
When removing or refitting an injector, respect the cleanliness guidelines and safety advice (see **MR 353, MR 402 or MR 361 Mechanical, 13B, Diesel injection, Removal/refitting of injectors**).

***AFTER** REPAIR*	Carry out a road test, followed by a check with the fault finding tool.

GETtheMANUALS.org

TEST10 CONTINUED	

PART B
Confirmation of flow correction check fault finding for each injector: (individual correction)
Clear the fault(s) and carry out a test with the **engine at idle speed** and the fuel temperature **> 50˚C**, check that no faults appear on the diagnostic tool and that the correction values do not reach **± 5 mm^3/stroke** to confirm the repair.
– If any other cylinders have injector flow correction values which exceed **± 5 mm^3/stroke**, follow the fault finding procedure described in **Part A**". Fuel regulation balance check for each injector (individual).

PART C
Injector nozzle sealing check:
– Check the level and condition of the engine oil:
– If there is diesel fuel contamination, the leaking injector nozzle will be "greasy".
– Disconnect the preheating relay.
– Check that these traces are not caused by rising engine oil, by checking the engine compression values.
– Check the condition of the heater plug: this must not be wet. If it is, change the defective injector.
– If the engine compression values are correct, locate the faulty injector by looking at the condition of the cylinders and the pistons across the heater plug wells (greasy cylinder, overheating, starting to incur damage, etc.).
– If the cylinder - piston examination is not conclusive, remove the injectors and change the one with the "greasy" nozzle.
– If the fault finding checks do not enable the engine to be repaired, contact the Techline.

Note:
Before replacing an injector, check that its sealing washer is in place and in order.

IMPORTANT
When removing or refitting an injector, respect the cleanliness guidelines and safety advice (see **MR 353, MR 402 or MR 361 Mechanical, 13B, Diesel injection, Removal/refitting of injectors**).

***AFTER** REPAIR*	Carry out a road test, followed by a check with the fault finding tool.

GETtheMANUALS.org

TEST11	High pressure pump

Confirm the customer complaint:
Loss of power, sometimes with difficult starting from cold, before applying the test described below.
Are the following conditions confirmed?
– No fault code.
– No external leak from the fuel circuit.
– No air intake on the fuel circuit.
Check that there is no OTS to be carried out on the vehicle.
As AC029 "High pressure circuit sealing test" is not available on all VELSATIS Vdiag 04, this test may not succeed.

Stage 1: measure of the rail pressure:
– Carry out a road test and record the following parameters as soon as power is lost:
  – **PR145 Engine speed.**
  – **PR030 Accelerator pedal position.**
  – **PR038 Rail pressure.**
  – **PR008 Rail pressure setpoint.**
  – **PR213 Rail pressure loop difference.**
– Print the data found.

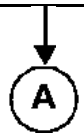

***AFTER** REPAIR*	Carry out a road test, followed by a check with the fault finding tool.

GETtheMANUALS.org

TEST11

CONTINUED

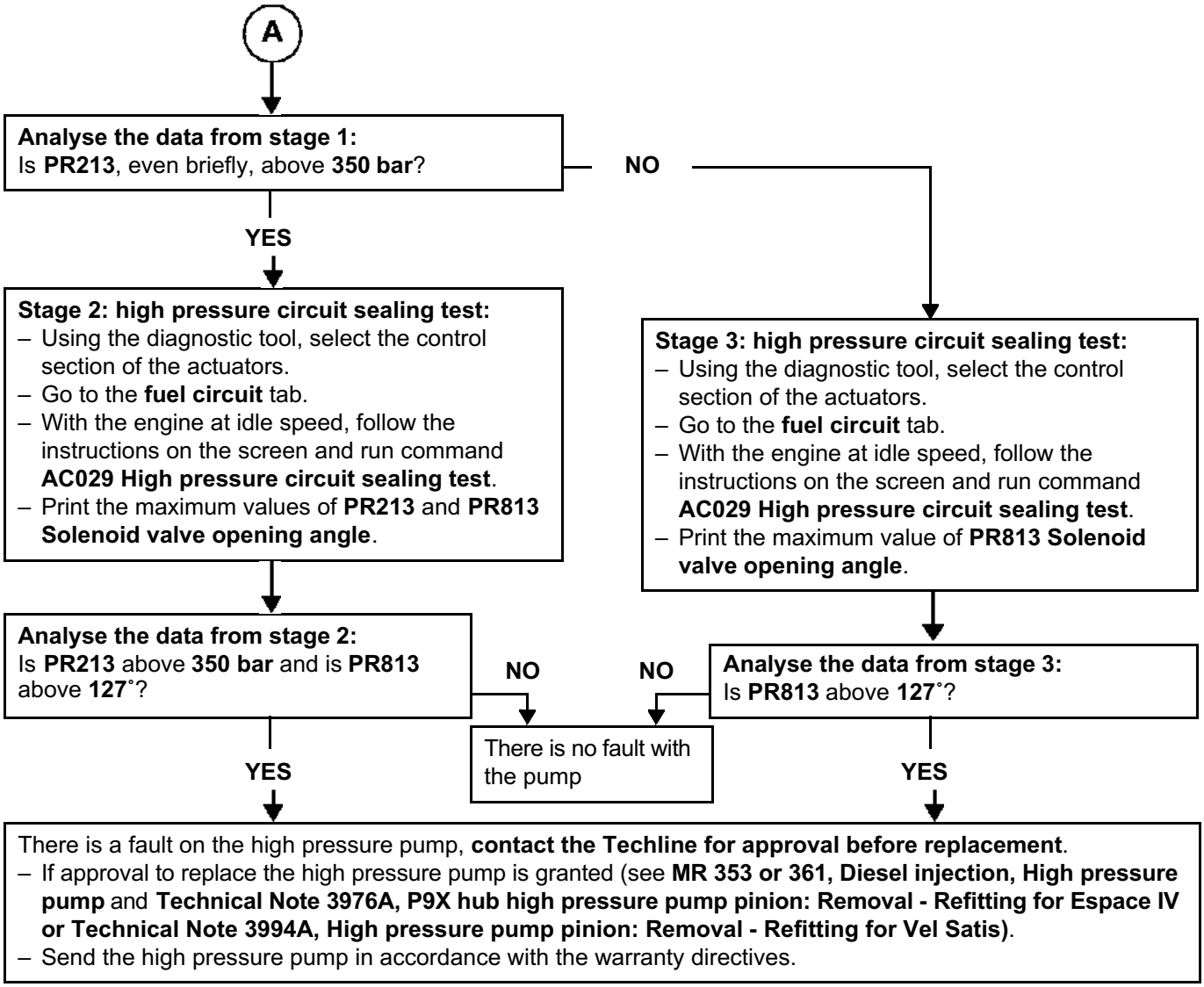

***AFTER** REPAIR*	Carry out a road test, followed by a check with the fault finding tool.

GETtheMANUALS.org

TEST12	Fuel conformity check

WARNING
During this operation, it is essential to:
– refrain from smoking or bringing incandescent objects close to the work area,
– guard against petrol splashes caused by the residual pressure in the pipes,
– wear safety goggles with side guards,
– wear leaktight gloves (Nitrile type).

IMPORTANT
– To avoid any corrosion or damage, protect the areas on which fuel is likely to run.
– To prevent impurities from entering the circuit, place protective plugs on all fuel circuit components exposed to the open air.

Preparations:
Weigh an empty **1300 ml plastic cup (part no. 77 11 171 413)** with its cover **(part no. 77 11 171 416)** using electronic scales such as those used in body paint workshops (example: **PANDA part no. 77 11 224 995**). Record the weight of the empty plastic cup.
This type of plastic cup is used to prepare paint.

Remove **1 L** of fuel **at the diesel filter outlet** (see **MR 353, 361 or 402, Mechanical, 19C, Tank, Fuel tank: Draining**), using a pneumatic transfer pump (**part no. 634-200**) and place it in the **1300 ml** plastic cup.
Cover the plastic cup with its cover and let it settle for approximately **2 minutes**.

,

Is the fuel cloudy or does it separate into two parts?

YES → Presence of water in diesel fuel, the fuel is not compliant. Drain the fuel circuit, including the tank (**MR353, 361 or 402, Mechanical, 19C, Tank, Fuel tank: Draining).**

NO ↓

***AFTER** REPAIR*	Carry out a road test, followed by a check with the fault finding tool.

GETtheMANUALS.org

TEST12 CONTINUED 1	

A

Weigh the diesel fuel and note the fuel weight after subtracting the weight of the empty plastic cup and its cover.
Does the fuel weight fall between the minimum and maximum weights given in the table below?

Calculated weight (g.)		Fuel temperature (˚C)
Minimum weight	Maximum weight	
821	846	13
821	846	14
820	845	15
819	844	16
819	844	17
818	843	18
817	842	19
816	841	20
816	841	21
815	840	22
814	839	23
814	839	24
813	838	25

Check the fuel temperature by immersing a thermometer in the plastic cup.

YES → B

NO → C

AFTER REPAIR	Carry out a road test, followed by a check with the fault finding tool.

GETtheMANUALS.org

TEST12 CONTINUED 1	

B

End of test.

C

The fuel is not correct.
If the fuel weight is less than the minimum value then there is petrol in the diesel fuel.
If the fuel weight is greater than the minimum value then there is oil in the diesel fuel.
Drain the fuel circuit, including the tank (**MR353, 361 or 402, Mechanical, 19C, Tank, Fuel tank: Draining).**

Note:
If the weight measured reaches the limit values, the measurement can be performed with a **2230 ml plastic cup (part no.77 11 171 414)** and its cover **(part no.77 11 171 417):**
– Carry out a quick test drive in order to mix the fuel, then remove **2 l** of fuel.
– Perform the test again and check the results by multiplying the limit values by 2.

Contact the Techline if you have doubts or problems with the customer.

AFTER REPAIR	Carry out a road test, followed by a check with the fault finding tool.

GETtheMANUALS.org

MANIFOLD/TURBOCHARGER PRESSURE SENSOR

Characteristics:	Pressure - Voltage transducer
Supply voltage:	**5 V ± 0.25 V**
Type of circuit:	Active circuit
System equipped:	Denso injection
Type of connector:	**3-track** (1 signal - 2 minus - 3 plus)

Description:
This sensor is used by the injection system to give a signal relating to the manifold pressure vacuum or the turbocharging pressure.
It uses a piezoelectric component which produces an electric voltage proportional to the stress applied to it (in this case, pressure).
This signal is very weak and is amplified by an internal electronic system which requires an external **5 V** feed supplied by the injection computer.

Checking the sensor:
The sensor delivers a voltage proportional to the inlet manifold vacuum:
2.59 bar absolute (**1.59 bar** relative) = **4.5 V**.
1 bar absolute (**0 bar** relative) = **1.73 V**.
0.07 bar absolute (**- 0.93 bar** relative) = **0.284 V**.

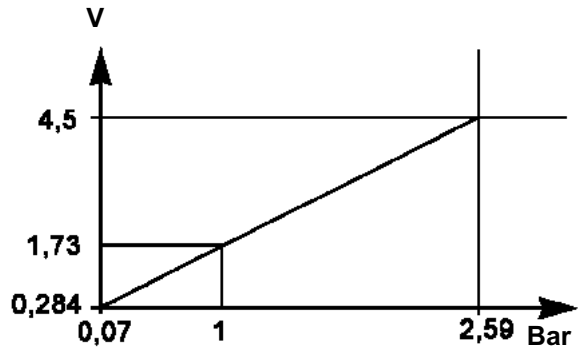

Check first that the sensor is correctly supplied with a voltage of **+ 5 V** with the sensor connected.
Use a multivac pump connected to the sensor's vacuum union to check that the signal does correspond to the graph. Disconnect **track 3** linking the computer to the sensor and connect the + lead of a multimeter (rated at between **5 and 10 V**) on **track 3** of the sensor and the - lead to **track 2** of the sensor (sensor earth still connected to the computer).
At atmospheric pressure, the voltage should be approximately equal to **1.73 V**.
At close to **2.59 bar** absolute, the voltage should be more or less equal to **4.5 V**.
At close to **0.07 bar** absolute, the voltage should be more or less equal to **0.284 V**.
If the voltages do not correspond to the pressures, replace the sensor.

GETtheMANUALS.org

AIR FLOW SENSOR

Characteristics:	Air flow - Voltage transducer
Supply voltage:	**12 V**
Type of circuit:	Active circuit
System equipped:	Denso injection
Type of connector:	**5-track** (**5**: signal; **3**: earth; **4**: + 5 V; **2**: + 12 V)

Description:
This sensor is used by the injection system to give a signal relating to the air flow circulating in the inlet circuit.
It uses a so-called "hot film" system, a ceramic insert onto which a heating resistor and a temperature sensor are screen-printed, which are placed in the middle of the air stream.
An electronic circuit heats the insert and monitors its temperature by means of its temperature sensor located away from the heating resistor.
The passage of air cools the ceramic wafer, and the electronic circuit will compensate for this cooling by increasing the current passing through the heating resistor so as to maintain its reference temperature.
This current, after being formatted by the flow sensor electronics, represents the air flow passing through the flow sensor.
A signal varying from **0** to **12 V** represents an air mass flow rate.
An external **12 V** power supply provided by the injection computer's safety relay is necessary for it to operate.

Checking the sensor:
Check that the grilles protecting the flow sensor are not clogged or damaged and check the cleanliness of the ceramic sensor located in the centre of the housing, which should be clean and must not be broken. Do not use detergent to clean the sensor (risk of damage).
The sensor cannot be dismantled; in case of doubt regarding its consistency, carry out a flow measurement.
Conditions:
Engine at operating temperature, exhaust gas recirculation valve and turbocharger wastegate disconnected and air conditioning off.
Perform a measurement at idling speed and then at a stabilised 3,000 rpm. Repeat this measurement with another flow sensor. The values should be more or less equivalent; if not, replace the flow sensor.
Average flow value at inlet according to the conditions set out above:
At idle speed (700 rpm): 70 kg/h
At 3000 rpm (stabilised): 320 kg/h

Note:
These values are typical for a new engine in operation and may only be used as an estimate.
To confirm the test, carry out a test with another flowmeter.

GETtheMANUALS.org

COOLANT TEMPERATURE SENSOR - INLET AIR - FUEL

IMPORTANT
Only affects the OBD air temperature sensor at the flow sensor.

Characteristics:	Temperature - resistance transducer
Resistance:	Depends on the temperature
Type of circuit:	Passive circuit
System equipped:	Denso injection
Type of connector:	**2 tracks**

Description:
This sensor is used by the injection system to give a signal representing a temperature of a component to which the sensor is attached.
This is a negative temperature coefficient resistor (the resistance drops when the temperature increases).
A circuit in the computer powers the sensor with a constant current and variation of the resistance causes variation of the voltage across the terminals of the sensor, this voltage being representative of the temperature.

Checking the sensor:
The presence of a yellow or transparent wax in the connector indicates that the sensor seal is broken; replace it and recheck the sealing.
Use a multimeter to first check the insulation of the sensor's two tracks from its metal base (if so equipped) or from engine earth.
The resistance should in this case be infinite; if this is not the case replace the sensor.
Using a multimeter, check the sensor's resistance in relation to the temperature.
This should be **3515 Ω ± 200 Ω at 20 °C**.
If the values do not correspond, replace the sensor.

GETtheMANUALS.org

ACCELERATOR POTENTIOMETER

Characteristics:	Position - resistance transducer
Supply voltage:	2 gangs, each at **+ 5 V ± 0.25 V**
Resistance:	Depends on the angle
Type of circuit:	Passive circuit
System equipped:	Denso injection
Type of connector:	**6 tracks**

Pin configuration:

Track 2 > potentiometer earth 1	**track 1 >** potentiometer earth 2
Track 4 > potentiometer supply 1	**track 5 >** potentiometer supply 2
Track 2 > potentiometer signal 1	**track 1 >** potentiometer signal 2

Description:
This sensor is equipped with two potentiometers (variable resistance) insulated from one another.
The position of the shaft causes a variation in the sensor's internal resistance.
The two gangs are not synchronous, gang 2 has a resistance value double that of gang 1.
These two gangs are used by the injection computer to check that the accelerator potentiometer is giving consistent signals.

Checking the sensor:
Use a multimeter to measure the resistance of the potentiometers,
– between **tracks 1** and **5**, the resistance should be **1700 ± 500 Ω**,
– between **tracks 2** and **6**, the resistance should be **1200 ± 500 Ω**,
If one of the gangs is not within these tolerances, replace the accelerator potentiometer.

MINIMUM value:
Gang 1 (from **13.6 % to 16.4 %** of Valim P1 (5 V) or **0.68 to 0.82 V**)
Gang 1 (from **5.2 % to 9.8 %** of Valim P2 (5 V) or **0.26 to 0.49 V**)

MAXIMUM value:
Gang 1 (from **83.6 % to 92.4 %** of Valim P1 (5 V) or **4.18 to 4.62 V**)
Gang 1 (from **40.7 % to 47.3 %** of Valim P2 (5 V) or **2.03 to 2.36 V**)

GETtheMANUALS.org

WASTEGATE POSITION SENSOR

Characteristics: Position - resistance transducer
Supply voltage: **5 V ± 0.25 V**
Type of circuit: Passive circuit
System equipped: Denso injection
Type of connector: **3-track** (1 signal - 2 minus - 3 plus)

Description:
This sensor is used by the injection system to give a signal relating to the turbocharger wastegate control position.
It uses a potentiometer powered externally by the injection computer at a voltage of **5 V**.
The sensor will thus generate a voltage proportional to its position.

Checking the sensor:
The sensor delivers a voltage proportional to the position of the wastegate rod:
End stop in rest position = **4.70 V**
10 mm of stroke = **0.45 V**

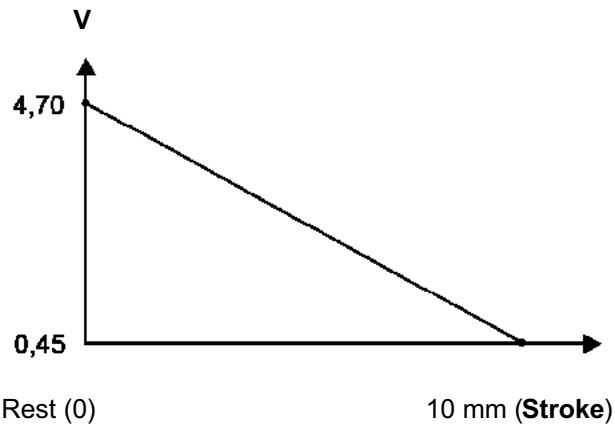

Check first that the sensor is correctly supplied with a voltage of **+ 5 V** with the sensor connected.
Use a multivac pump connected to the capsule's vacuum union and a rule to measure the rod travel.
Check that the signal corresponds to the graph.
Disconnect **track 1** linking the computer to the sensor and connect the + lead of a multimeter (rated at between **5 and 10 V**) to **track 1** of the sensor and the - lead to **track 2** of the sensor (sensor earth still connected to the computer).
If the voltages do not correspond to the position of the wastegate rod, replace the sensor.

GETtheMANUALS.org

RAIL PRESSURE SENSOR

Characteristics:	Pressure - Voltage transducer
Supply voltage:	**5 V ± 0.25**
Type of circuit:	Active circuit
System equipped:	Denso injection
Type of connector:	**3-track** (1 signal - 2 minus - 3 plus)

Description:
This sensor is used by the injection system to give a signal relating to the rail pressure (fuel pressure in the common rail).
It uses a piezoelectric component which produces an electric voltage proportional to the stress applied to it (in this case, pressure).
This signal is very weak and is amplified by an internal electronic system which requires an external **5 V** feed supplied by the injection computer.

Checking the sensor:
The sensor delivers a voltage proportional to the rail pressure:
1600 bar = 4.20 V
0 bar = 1 V

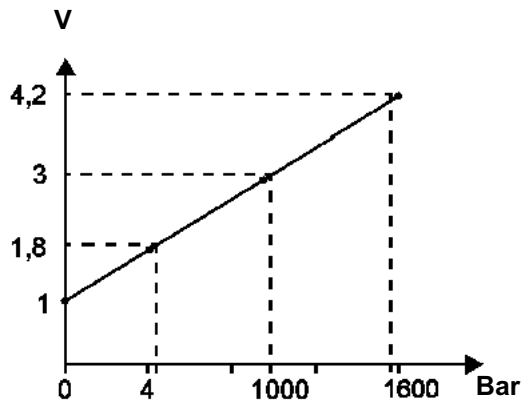

The formula is as follows:
P being the pressure in bar: **(P/500) + 1 = U**
U being the signal pressure in volts: **(U - 1) x 500 = P**
Check first that the sensor is correctly supplied with a voltage of **+ 5 V** with the sensor connected.
Dump the pressure in the common rail and check that the sensor signal voltage is **1 V**.
If the voltage is not correct, replace the sensor.

GETtheMANUALS.org

P9X 701 engine speed:	– Idling speed	**700 ± 50 rpm**
	– No load maximum	**5,000 ± 80 rpm**
	– Injection order	**1-2-3-4-5-6**
	– Compression ratio	**18.5: 1**
High pressure pump:	EDC-U2P	**Denso HP2270L**
Turbocharging pressure sensor:	Bolted to rail (pressure range: **0 to 1700 bar**)	
Wastegate control solenoid valve:	**R = 12 ± 1 Ω** (control frequency: 400 Hz)	
Turbocharger position sensor:	**R = 5 ± 1 kΩ at 20 ˚C** between tracks **2** and **3**	
Injector:	**2.7 Ω at 20 ˚C (new injector), calibration: 466 bar**	
Pressure regulation solenoid valves:	**SCV1**, R **= 1.6 ± 0.3 Ω at 20 ˚C** (non-removable) **SVC2**, R **= 1.6 ± 0.3 Ω at 20 ˚C** (non-removable)	
Injection computer (ECU):	**121 tracks, 2 connectors:**	**A, 81 tracks** **B, 40 tracks**
Injection Power Unit (EDU):	**16 tracks**	
Accelerator pedal sensor:	R gang 1 **= 1200 Ω ± 500 Ω** R gang 2 **= 1700 Ω ± 500 Ω**	
Inlet air temperature sensor:	R = **3515 Ω ± 200 Ω at 20 ˚C**	
OBD air temperature sensor (flow sensor):	R = **2515 Ω ± 200 Ω at 20 ˚C**	
Temperature sensor (diesel):	R = **3515 Ω ± 200 Ω at 20 ˚C**	
Engine coolant temperature sensor:	R = **3515 Ω ± 200 Ω at 20 ˚C**	
Engine oil temperature sensor:	R = **3515 Ω ± 200 Ω at 20 ˚C**	
Engine speed sensor:	Induction sensor, R **= 2150 ± 300 Ω**	
Camshaft sensor:	Induction sensor, R **= 2150 ± 300 Ω**	
Air flowmeter:	track 1**: air temperature signal** track 2**: - flow sensor** track 3**: ± 5 V flow sensor**	track 4**: + 12 V battery** track 5**: Air flow signal** track 6**: Earth**
Exhaust gas recirculation valve (EGR):	R (coil) = **6.8 ± 0.5 Ω at 20 ˚C** between tracks **4** and **5**	
	R (potentiometer) **= 5 ± 0.5 kΩ at 20 ˚C** between tracks **2** and **3**	
	track 1**: potentiometer signal** track 2**: Earth** track 3**: + 5 V**	track 4**: EGR control** track 5**: + 12 V battery**

(R = resistance)

Values given as a guide only

GETtheMANUALS.org

VEL SATIS

1 Engine and peripherals

13B DIESEL INJECTION

DENSO Isuzu
Program No.: BF57
Vdiag No.: 11

Fault finding - Introduction	13B - 2
Fault finding - Cleanliness guidelines	13B - 7
Fault finding - System operation	13B - 9
Fault finding - Allocation of computer tracks	13B - 14
Fault finding - Replacement of components	13B - 19
Fault finding - Configurations and programming	13B - 20
Fault finding - Fault summary table	13B - 21
Fault finding - Interpretation of faults	13B - 26
Fault finding - Conformity check	13B - 180
Fault finding - Status summary table	13B - 218
Fault finding - Interpretation of statuses	13B - 219
Fault finding - Parameter summary table	13B - 247
Fault finding - Interpretation of parameters	13B - 249
Fault finding - Command summary table	13B - 257
Fault finding - Dealing with commands	13B - 258
Fault finding - Interpretation of commands	13B - 259
Fault finding - Customer complaints	13B - 289
Fault finding - Fault finding chart	13B - 290
Fault finding - Tests	13B - 305
Fault finding - Glossary	13B - 323

V2 **Edition Anglaise**

"The repair procedures given by the manufacturer in this document are based on the technical specifications current when it was prepared.

The procedures may be modified as a result of changes introduced by the manufacturer in the production of the various component units and accessories from which his vehicles are constructed."

All rights reserved by Renault s.a.s.

Copying or translating, in part or in full, of this document or use of the service part reference numbering system is forbidden without the prior written authority of Renault s.a.s.

© Renault s.a.s. 2008

GETtheMANUALS.org

1. SCOPE OF THIS DOCUMENT

This document presents the fault finding procedure applicable to all computers with the following specifications:

Vehicle(s): **VEL SATIS Phase II**
ESPACE IV phase II

Engine: **P9X715**

Function concerned: **Diesel Injection**

Computer name: **DENSO Isuzu**

Program No.: **BF57**

Vdiag No.: **11**

2. PREREQUISITES FOR FAULT FINDING

Documentation type

Fault finding procedures (this document):
– Assisted fault finding (integrated into the diagnostic tool), Dialogys.
Wiring Diagrams:
– Visu-Schéma (CD-ROM).

Type of diagnostic tools

– **CLIP**

Special tooling required

Special tooling required	
	Multimeter
Elé. 1681	Universal bornier

3. REMINDERS

Procedure

To run fault finding on the vehicle's computers, switch on the ignition in fault finding mode (forced + after ignition feed).

Proceed as follows:
– vehicle card in reader,
– press and hold the Start button (longer than **5 seconds**) with start-up conditions not fulfilled,
– connect the diagnostic tool and perform the required operations.

To **cut off the + after ignition feed**, proceed as follows:
– disconnect the diagnostic tool,
– press the Start button twice briefly (less than **3 seconds**),
– ensure that the + after ignition feed has been cut off by checking that the computer indicator lights on the instrument panel have gone out.

GETtheMANUALS.org

Faults

Faults are declared present or stored (depending on whether they appeared in a certain context and have disappeared since, or whether they remain present but are not diagnosed within the current context).

The **present** or **stored** status of faults should be considered when using the **diagnostic tool** after the + after ignition feed is switched on (without any action on the system components).

For a **present fault**, apply the procedure described in the **Interpretation of faults** section.

For a **stored fault**, note the faults displayed and apply the **Notes** section.

If the fault is **confirmed** when the instructions are applied, the fault is present. Deal with the fault.

If the fault is **not confirmed**, check:
- the electrical lines which correspond to the fault,
- the connectors for these lines (for oxidation, bent pins, etc.),
- the resistance of the component detected as faulty,
- the condition of the wires (melted or split insulation, wear).

Conformity check

The aim of the conformity check is to check data that does not produce a fault on the **diagnostic tool** when the data is inconsistent. Therefore, this stage is used to:
- carry out fault finding on faults that do not have a fault display, and which may correspond to a customer complaint.
- check that the system is operating correctly and that there is no risk of a fault recurring after repairs.

This section gives the fault finding procedures for statuses and parameters and the conditions for checking them.

If a status is not behaving normally or a parameter is outside the permitted tolerance values, consult the corresponding fault finding page.

Customer complaints - Fault finding chart

If the test with the diagnostic tool is OK but the customer complaint is still present, the fault should be processed by **Customer complaints**.

A synopsis of the general procedure to follow is provided on the following page in the form of a flow chart.

GETtheMANUALS.org

4. FAULT FINDING PROCEDURE

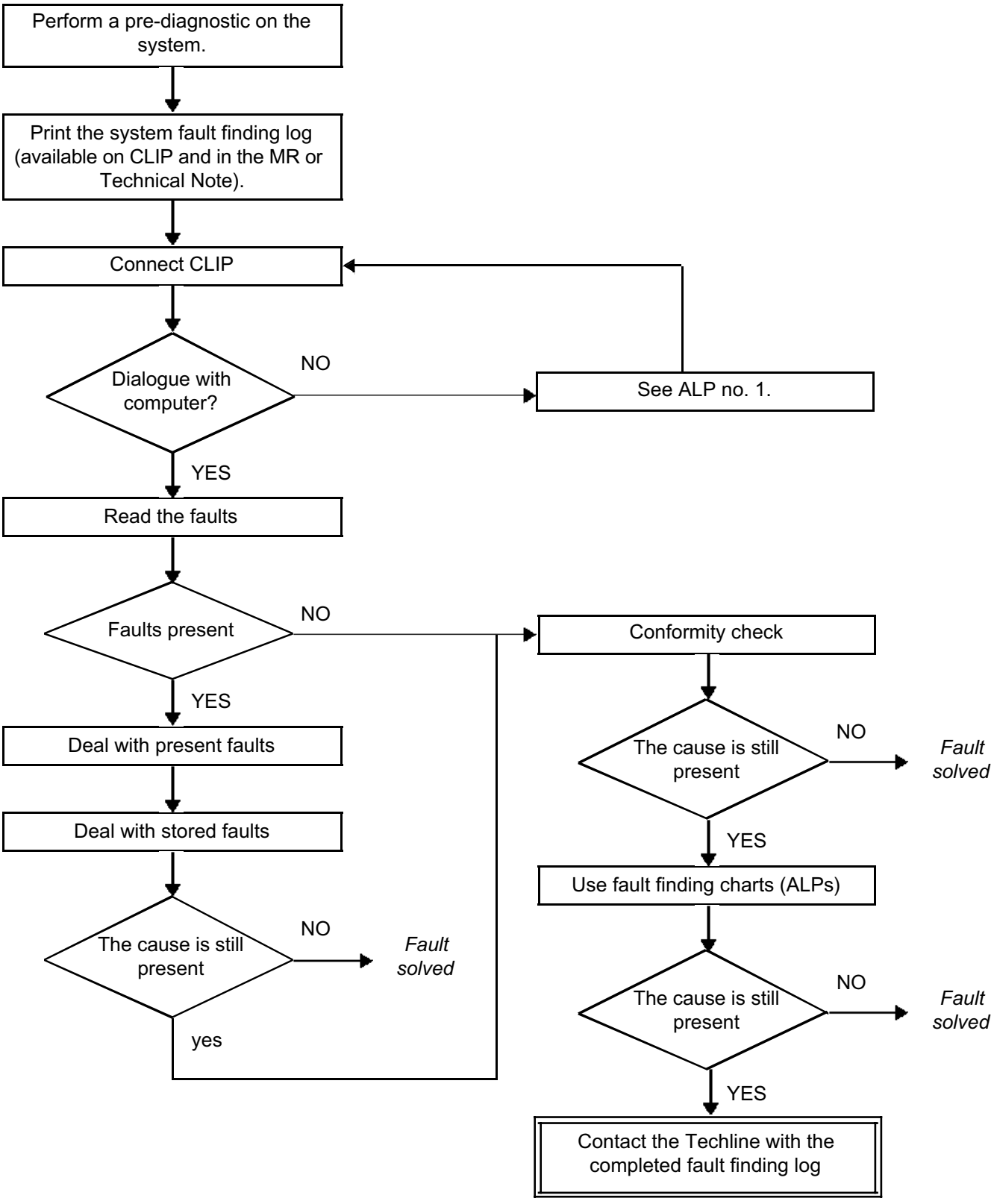

GETtheMANUALS.org

4. FAULT FINDING PROCEDURE (continued)

Wiring check

Fault finding problems:
Disconnecting the connectors and/or handling the wiring harness may temporarily remove, the cause of a fault.
Electrical measurements of voltage, resistance and insulation are generally correct, especially if the fault is not present when the analysis is made (stored fault).

Visual inspection:
Look for damage under the bonnet and in the passenger compartment.
Carefully check the fuses, insulators and wiring harness routing.
Look for signs of oxidation.

Tactile inspection:
While manipulating the wiring, use the diagnostic tool to note any change in fault status from stored to present.
Make sure that the connectors are properly locked.
Apply light pressure to the connectors.
Twist the wiring harness.
If there is a change in status, try to locate the source of the fault.

Inspection of each component:
Disconnect the connectors and check the appearance of the clips and tabs, as well as the crimping (no crimping on the insulating section).
Make sure that the clips and tabs are properly locked in the sockets.
Check that no clips or tabs have been dislodged during connection.
Check the clip contact pressure using an appropriate model of tab.

Resistance check:
Check the continuity of entire lines, then section by section.
Look for a short circuit to earth, to **+ 12 V** or with another wire.

If a fault is detected, repair or replace the wiring harness.

GETtheMANUALS.org

5. FAULT FINDING LOG

IMPORTANT!

IMPORTANT
Any fault on a complex system requires thorough fault finding with the appropriate tools.
The **FAULT FINDING LOG**, which should be completed during the fault finding procedure, ensures a record is kept of the procedure carried out. It is an essential document when consulting the manufacturer.

IT IS THEREFORE MANDATORY TO FILL OUT A FAULT FINDING LOG EACH TIME FAULT FINDING IS CARRIED OUT.

You will always be asked for this log:

- when requesting technical assistance from Techline,
- for approval requests when replacing parts for which approval is mandatory,
- to be attached to monitored parts for which reimbursement is requested. The log is needed for warranty reimbursement, and enables better analysis of the parts removed.

6. SAFETY INSTRUCTIONS

Safety rules must be observed during any work on a component to prevent any damage or injury:

- check the battery voltage to avoid incorrect operation of computer functions,
- use the proper tools.

GETtheMANUALS.org

I - RISKS ASSOCIATED WITH CONTAMINATION

The high pressure direct injection system is highly sensitive to contamination. The risks associated with contamination are:
– damage to or destruction of the high pressure injection system,
– components jamming,
– components losing seal integrity.

All After-Sales operations must be performed under very clean conditions. This means that no impurities (particles a few microns in size) should have entered the system during dismantling.

The cleanliness principle must be applied from the filter to the injectors.

What are the sources of contamination?
– metal or plastic chips,
– paint,
– fibres:
  – from cardboard,
  – from brushes,
  – from paper,
  – from clothing,
  – from cloths,
– foreign bodies such as hair,
– ambient air,
– etc.

IMPORTANT
Cleaning the engine using a high pressure washer is prohibited because of the risk of damaging connections. Also, moisture may collect in the connectors and create electrical connection faults.

II - NOTES TO BE FOLLOWED BEFORE ANY OPERATION

IMPORTANT
Before any work is carried out on the high pressure injection system, protect:
– the accessories and timing belts,
– the electrical accessories, (starter, alternator, electric power assisted steering pump),
– the flywheel surface, to prevent any diesel from running onto the clutch friction plate.

Check that you have plugs for the unions to be opened (set of plugs available from the Parts Department). The plugs are single-use only. After use, they must be discarded (once used they are soiled and cleaning is not sufficient to make them reusable). Unused plugs must be discarded.

GETtheMANUALS.org

Check that you have hermetically resealable plastic bags for storing removed parts. Parts stored in this way will be less susceptible to the risk of contamination. The bags are to be used once only, and discarded after use.

Use lint-free cleaning cloths (cloth part number **77 11 211 707**). Using normal cloth or paper is prohibited. They are not lint-free and could contaminate the fuel circuit. Each cloth should only be used once.

Use fresh cleaning agent for each operation (used cleaning agent is contaminated). Pour it into an uncontaminated container.

For each operation, use a clean brush in good condition (the brush must not shed its bristles).

Use a brush and cleaning agent to clean the unions to be opened.

Blast compressed air over the cleaned parts (tools, workbench, the parts, unions and injection system zones). Check that no bristles remain.

Wash your hands before and during the operation if necessary.

When wearing leather protective gloves cover them with latex gloves to prevent contamination.

III - INSTRUCTIONS TO BE FOLLOWED DURING THE OPERATION

As soon as the circuit is open, all openings must be plugged to prevent impurities from entering the system. The plugs to be used are available from the Parts Department. The plugs must not be reused under any circumstances.

Seal the pouch shut, even if it has to be opened shortly afterwards. Ambient air carries contamination.

All components removed from the injection system must be stored in a hermetically sealed plastic bag once they have been plugged.

Using a brush, cleaning agent, air gun, sponge or normal cloth is strictly prohibited once the circuit has been opened. These items could allow contamination to enter the system.

A new component replacing an old one must not be removed from its packaging until it is to be fitted to the vehicle.

GETtheMANUALS.org

The high pressure injection system is designed to deliver a precise quantity of diesel fuel to the engine at a set moment.

It is fitted with a **121-track** computer made by **DENSO ISUZU**

The system is comprised of:
- a priming pump,
- a diesel filter fitted with a heater,
- a high pressure pump with two pumping pistons,
- two high pressure regulators attached to the pump,
- an injector rail,
- a diesel fuel pressure sensor built into the rail,
- a pressure limiter,
- six solenoid injectors,
- a diesel fuel temperature sensor,
- a coolant temperature sensor,
- an air inlet temperature sensor,
- an oil temperature sensor,
- a cylinder reference sensor,
- a turbocharger pressure sensor,
- an exhaust gas recirculation solenoid valve,
- an accelerator pedal potentiometer,
- an atmospheric pressure sensor integrated into the injection computer,
- an injection computer,
- an air flow sensor (fitted with an OBD air temperature sensor),
- a turbocharging limiter solenoid valve,
- a damper flap solenoid valve.

The "**common rail**" high pressure direct injection system works sequentially (based on the multipoint injection system for petrol engines).

This new injection system reduces operating noise, reduces the volume of pollutant gases and particles and produces high engine torque at low engine speeds thanks to a pre-injection procedure.

The high pressure pump generates the high pressure and transmits it to the injector rail. The actuators located on the pump control the quantity of diesel fuel supplied based on the demand determined by the computer. The rail supplies each injector through a steel pipe.

GETtheMANUALS.org

a) The computer:

This determines the injection pressure value necessary for the engine to operate correctly and then controls the pressure regulators. It checks that the pressure value is correct by analysing the value transmitted by the pressure sensor located on the rail.

It determines the injection timing required to deliver the right quantity of diesel fuel and the moment when injection should start.

Controls each injector electrically and individually after determining these two values.

The flow injected into the engine is determined by:
- the duration of injector control,
- the rail pressure (regulated by the computer),
- the injector opening and closing speed,
- the needle stroke (determined by a constant for the type of injector),
- the nominal hydraulic flow of the injector (specific to each injector),
- the pedal load,
- the engine speed.

The computer manages:
- idling regulation,
- exhaust gas flow reinjection to the inlet,
- the fuel supply (advance, flow and rail pressure),
- the motor-driven fan assembly control via the Protection and Switching Unit (centralised coolant temperature management function),
- the air conditioning (cold loop function),
- the cruise control/speed limiter function,
- pre-post heating control,
- fault warning lights via the multiplex network.

The high pressure pump supplies the rail whose pressure is controlled by the fuel flow actuator for filling and by the injector valves for discharging. This compensates for pressure drops. The fuel flow actuator enables the high pressure pump to supply the exact quantity of diesel fuel required to maintain the rail pressure. This component minimises the heat generated and improves engine output.
In order to discharge the rail using the injector valves, the valves are controlled by brief electrical pulses which are:
- short enough not to open the injector (passing through the feedback circuit from the injectors),
- long enough to open the valves and discharge the rail,
- multiplexed connection between the vehicle's various computers.

The fault warning lights on the instrument panel are activated via the multiplex network.

The vehicle speed signal on the instrument panel is transmitted by the ABS computer or the **WHEEL SPEED** computer via a wire connection and is then transmitted via the multiplex network by the instrument panel. The main users of the vehicle speed signal are the injection computer and the airbag computer.

Some vehicles have adopted a sensor for detecting water in the diesel fuel, located in the filter. If there is water in the fuel, the orange injection and pre/postheating warning light will come on.

GETtheMANUALS.org

IMPORTANT
The engine must not operate with:
- diesel fuel containing more than 10% diester,
- petrol, even in tiny quantities.

The system can inject diesel fuel into the engine at a pressure of up to **1450 bar**. Before each operation, check that the injector rail is depressurised and that the fuel temperature is not too high.

When working on the high pressure injection system, you must follow the cleanliness guidelines and safety advice specified in this document.

Removal of the internal parts of the pump and injectors is prohibited. Only the fuel flow actuator and the diesel fuel temperature sensor can be replaced.

For safety reasons, it is strictly prohibited to undo a high pressure pipe union when the engine is running.

It is not possible to remove the pressure sensor from the fuel rail because this may cause circuit contamination faults. If the pressure sensor fails, replace the pressure sensor, the rail and the high pressure pipes.

Supplying **+ 12 V** directly to any component in the system is prohibited.

Ultrasonic decoking and cleaning are prohibited.

Never start the engine unless the battery is connected correctly.

Disconnect the injection computer when carrying out any welding work on the vehicle.

b) Management of cruise control/speed limiter:

When activated, the cruise control function maintains the vehicle at a preselected speed, regardless of the driving conditions encountered. Using the control buttons, the driver can increase or reduce the vehicle speed.

The cruise control function can be deactivated either using the control buttons, or by switching off the cruise control function selection switch or when system events are detected (such as the brake pedal being depressed), or when system errors are detected such as an inconsistent vehicle speed or excessive vehicle deceleration.

The cruise control function can also be temporarily suspended when the driver wants to resume control of the vehicle and exceed the selected cruising speed by depressing the accelerator pedal which then exceeds the selected fuel flow. The cruising speed is resumed when the driver releases the accelerator pedal.

The cruise control function can be reactivated and the last cruising speed can be resumed after deactivating the function for whatever reason until the vehicle ignition is switched off (i.e. for as long as computer supply not cut off). The vehicle will then attempt to return to the cruising speed using a controlled vehicle acceleration rate.

GETtheMANUALS.org

When switched on (with the selection switch), the vehicle speed limiter function limits the vehicle speed to a preset value. The driver controls the vehicle in the normal way using the accelerator pedal until the limit speed is reached. If the driver attempts to exceed this speed, the system will ignore the pedal request and will control the vehicle speed in the same way as the cruise control function, provided that the driver keeps the accelerator pedal depressed.
As with the cruise control function, the limit speed can be altered using the control buttons by pressing briefly or pressing and holding.
For safety reasons, it is possible to exceed the limit speed by rapidly depressing the accelerator pedal. The vehicle speed is controlled by the accelerator pedal according to the driver's request. The vehicle's speed limiter is reactivated when the vehicle speed drops below the cruising speed again.

The driver has the following controls to operate the cruise control function:

- accelerator pedal,
- brake pedal,
- function selection switch for selecting speed limiter or cruise control operating mode,
- controls at the steering wheel.

GETtheMANUALS.org

Instrument panel display:

The computer manages the data display on the instrument panel relating to engine operation. This involves 5 functions:
– the EOBD (European On Board Diagnostic) MIL (Malfunction Indicator Lamp),
– pre-postheating,
– the coolant temperature,
– engine faults:
  - Level 1 (non critical fault),
  - Level 2 (emergency stop).

These five functions are represented by 4 warning lights and/or messages displayed by the trip computer.

Pre-postheating warning light:

Permanently on, supplied by + after ignition feed:
Indicates preheating of the plugs (automatic timed operation lasting **0 to 4 seconds**).

Coolant temperature/emergency stop (level 2) warning light:

This light is used as an operation indicator light and as a system fault warning light.
It switches on for **3 seconds** when a voltage is applied (automatic test procedure controlled by the instrument panel).

Continuously lit: indicates engine overheating or a **Level 2** fault.

If the fault reaches a critical level, the injection cuts off automatically after a few seconds. In the event of overheating, it is up to the driver whether to stop the vehicle or continue driving.

OPERATION OF INSTRUMENT PANEL WARNING LIGHTS:

Orange SERVICE non-critical fault warning light (level 1):

This warning light comes on, **accompanied by the faulty injection message**.

The driver should carry out repairs as soon as possible.

Red STOP emergency stop warning light (level 2):

This warning light comes on, **along with the check injection message**.

The driver should carry out repairs as soon as possible.

Orange OBD excess pollution warning light:

This warning light is represented by an engine, and it lights up when switching on the ignition for approximately **2 seconds** then goes out.

Continuous lighting: indicates a fault in an engine component preventing emission control standards being met.

The driver should carry out repairs as soon as possible.

GETtheMANUALS.org

Connector A, 81-track

Track	Connection	Description
1	**3FB**	+ after ignition feed (main relay)
2	**3FB**	+ after ignition feed (main relay)
3	**N***	General earth
4	**N***	General earth
5	**N***	General earth
6		Not used
7	**3LR**	+ accelerator potentiometer no. 1
8	**3LW**	Accelerator potentiometer no. 2 signal
9	**3MT**	CAN LOW BVA
10	**86G**	Cruise control/speed limiter programming control
11	**3LV**	Accelerator potentiometer no. 2 earth
12	**3ABU**	Diagnostic line 2 of the injector control computer
13	**3DU**	Air flow sensor earth
14		Not used
15		Not used
16	**86M**	Cruise control/speed limiter programming return signal
17	**3JAB**	Heating element no. 3 relay - control
18	**3JN**	Fan assembly relay - control 1
19	**3FF**	Preheating relay - control
20		Not used
21	**5A**	Brake pedal switch + signal
22		Not used
23	**3PD**	Speed limiter On/Off switch
24	**AP***	+ After ignition feed
25		Not used
26		Not used
27	**3LS**	Accelerator potentiometer no. 1 signal
28	**3B**	Flow meter air temperature sensor signal
29		Not used

GETtheMANUALS.org

Connector A, 81-track (continued 1)

Track	Connection	Description
30	**3DV**	Air flowmeter signal
31	**3LT**	Accelerator potentiometer no. 1 earth
32		Not used
33		Not used
34		Not used
35		Not used
36	**3JA**	Heating element no. 1 relay - control
37		Not used
38	**3JP**	Fan assembly relay - control 2
39		Not used
40		Not used
41		Not used
42	**D**	+ Starting
43		Not used
44	**3QT**	Injector 5 control signal
45	**3QR**	Injector 3 control signal
46	**3QP**	Injector 1 control signal
47	**3MS**	CAN HIGH BVA
48	**133C**	CAN LOW
49	**3HM**	Pre-postheating back row relay control diagnostic line
50	**HK**	KW2000 K-LINE
51		Not used
52		Not used
53		Not used
54		Not used
55		Not used
56	**3JAA**	Heating element no. 2 relay - control
57	**3AJD**	Fan assembly relay - control 3
58		Not used
59		Not used

GETtheMANUALS.org

Connector A, 81-track (continued 2)

Track	Connection	Description
60		Not used
61		Not used
62		Not used
63	**3QU**	Injector 6 control signal
64	**3QS**	Injector 4 control signal
65	**3QQ**	Injector 2 control signal
66	**3PZ**	Diagnostic line 1 of the injector control computer
67	**133B**	CAN HIGH
68	**3HL**	Pre-postheating front row relay control diagnostic line
69		Not used
70		Not used
71		Not used
72		Not used
73		Not used
74		Not used
75		Not used
76	**3AA**	Control - main relay coil
77	**3LU**	+ 5 V common supply n˚ 3
78		Not used
79		Not used
80		Not used
81	**3FX**	Cruise control On/Off - control

GETtheMANUALS.org

Connector B, 40 tracks

Track	Connection	Description
82	**3ACY**	Back row swirl flap position sensor signal
83	**3ACZ**	Front row swirl flap position sensor signal
84		Not used
85	**3YP**	CAN HIGH of turbo controller
86	**3KQ**	Air temperature sensor signal
87	**3CJ**	Sensor common earth 1
88	**3YQ**	CAN LOW of turbo controller
89	**3MD**	Swirl flap solenoid valve - control
90		Not used
91	**3VN**	Damper valve - control
92		Not used
93	**3LP**	Turbocharger pressure sensor signal
94	**3EL**	EGR valve position signal
95	**3CK**	Sensor common earth 2
96		Not used
97		Not used
98	**3AX**	+ 5 V common supply n° 2
99	**3C**	Coolant temperature sensor signal
100	**3LD**	Fuel temperature sensor signal
101		Not used
102	**3SV**	Camshaft sensor signal
103	**3QL**	Camshaft sensor earth
104	**3QK**	+ 5 V camshaft sensor
105		Not used
106	**3LY**	Rail pressure sensor signal
107	**3LY**	Rail pressure sensor signal
108		Not used
109	**47Q**	Oil temperature sensor signal

GETtheMANUALS.org

Connector B, 40-track (continued)

Track	Connection	Description
110	**3BG**	Engine speed sensor + signal
111	**3BL**	Engine speed sensor - signal
112	**5CS**	Engine speed sensor + 5 V
113		Not used
114	**3VP**	EGR valve + control
115	**3VQ**	EGR valve - control
116	**3LQ**	Fuel flow solenoid valve + 12 V
117		Not used
118		Not used
119		Not used
120	**3QN**	Fuel flow 2 solenoid valve - control
121	**3QM**	Fuel flow solenoid valve 1 - control

GETtheMANUALS.org

COMPUTER REPLACEMENT OR REPROGRAMMING

There are two steps that must be carried out when the computer is replaced or reprogrammed: **SC003 Save computer data** and **SC001 Write saved data**.

- **SC003** Run the command **before replacing or reprogramming** the computer. This enables certain data to be saved **in the diagnostic tool** so that the new computer* can be reconfigured like the old one. The data saved is the injector codes.
- **SC001** Run the command **after replacing or reprogramming** the computer. It is used to re-enter the information (saved using command **SC003**) into the new computer*.

* *new computer or reprogrammed computer.*

The system can be programmed and reprogrammed via the diagnostic socket using the RENAULT CLIP **diagnostic tool** (**Refer to Technical Note 3585A, Computer programming and reprogramming procedure or follow the instructions provided by the diagnostic tool**).

IMPORTANT
- **switch on the diagnostic tool (mains or cigarette lighter supply),**
- **connect a battery charger,**
- **shut down all the electrical consumers (lights, interior lights, air conditioning, radio CD, etc.),**
- **wait for the engine to cool down (coolant temperature below 60 ˚C and air temperature below 50 ˚C),**
- **during reprogramming the oil pressure warning light comes on, and then goes off when reprogramming has finished.**

Every time the computer has been reprogrammed or replaced:
- **Switch the ignition off and then on again,**
- **start and then stop the engine (to initialise the computer) and wait for 2 minutes,**
- **use the diagnostic tool to carry out the following procedures:**
  1. run command **VP010 Enter VIN**,
  2. carry out a road test followed by another check with the **diagnostic tool**.

IMPORTANT
It is not possible to try an injection computer coming from the Parts Department because it will no longer be possible to use it on another vehicle.

GETtheMANUALS.org

Summary of the configurations and programming available

NOTES	The configurations and programming are carried out to inform the vehicle computer of the VIN for the vehicle and the engine inhibitions.

VP010: Enter VIN

This command allows the VIN to be entered in the injection computer.
Use this command each time the computer is replaced or (re)programmed.

VP012: Deactivation of electrical consumers

This command is used to inhibit the electrical supply to the preheating unit, GMV control relay unit and heating element relays.

VP035: End deactivation of electrical consumers

This command is used to re-establish the electrical supply to the preheating unit, GMV control relay unit and heating element relays.

VP036: Inhibit fuel supply

This command is used to inhibit fuel supply to the injectors.

VP037: Restore fuel supply

This command is used to re-establish fuel supply to the injectors.

GETtheMANUALS.org

Management of instrument panel warning lights according to faults displayed.

Tool fault	Associated DTC code	Level 1 Fault warning light (Orange preheating warning light)	Level 2 fault warning light (Red overheating warning light)	No fault warning light lit	OBD warning light
DF001: Coolant temperature sensor circuit	0115	CO.1/CC.0/ 1.DEF			CO.1/CC.0/ 1.DEF
DF002: Air temperature sensor circuit	0070				CO.1/CC.0
DF003: Atmospheric pressure sensor circuit	2226	CO.0/CC.1			CO.0/CC.1
DF005: Engine speed sensor circuit	0335	1.DEF/2.DEF			1.DEF/ 2.DEF
DF007: Rail pressure sensor circuit	0190	CO.1/CC.0/CC	1.DEF		CO.1/CC.0/ CC
DF008: Pedal potentiometer circuit gang 1	0225	CC.1/CO.0/ 1.DEF			
DF009: Pedal potentiometer circuit gang 2	2120	CC.1/CO.0			
DF011: Sensor supply voltage no.1	0641	1.DEF/2.DEF			1.DEF/ 2.DEF
DF012: Sensor supply voltage no.2	0651	1.DEF/2.DEF			1.DEF/ 2.DEF
DF013: Sensor supply voltage no.3	0697	1.DEF/2.DEF			1.DEF/ 2.DEF
DF026: Cylinder 1 injector control circuit	0201	CO.0	CC.1		
DF027: Cylinder 2 injector control circuit	0202	CO.0	CC.1		
DF028: Cylinder 3 injector control circuit	0203	CO.0	CC.1		

GETtheMANUALS.org

Tool fault	Associated DTC code	Level 1 Fault warning light (Orange preheating warning light)	Level 2 fault warning light (Red overheating warning light)	No fault warning light lit	OBD warning light
DF029: Cylinder 4 injector control circuit	0204	CO.0	CC.1		
DF030: Cylinder 5 injector control circuit	0205	CO.0	CC.1		
DF031: Cylinder 6 injector control circuit	0206	CO.0	CC.1		
DF032: Heating element relay 1 control circuit	1641			CC.1/CO.0	
DF033: Heating element relay 2 control circuit	1642			CC.1/CO.0	
DF034: Heating element relay 3 control circuit	1643			CC.1/CO.0	
DF039: Inlet air temperature sensor circuit	0110				CO.1/CC.0
DF046: Battery voltage	0560		1.DEF/2.DEF		
DF051: Cruise control/ speed limiter function	0575	1.DEF/2.DEF/ 3.DEF/4.DEF			
DF056: Air flow sensor circuit	0100	CC.1/CO.0/ 1.DEF		2.DEF	1.DEF/ 2.DEF
DF058: Oil temperature sensor circuit	0195	CO.1/CC.0			
DF059: Combustion misfire on cylinder 1	0301			1.DEF	
DF060: Combustion misfire on cylinder 2	0302			1.DEF	

GETtheMANUALS.org

Tool fault	Associated DTC code	Level 1 Fault warning light (Orange preheating warning light)	Level 2 fault warning light (Red overheating warning light)	No fault warning light lit	OBD warning light
DF061: Combustion misfire on cylinder 3	0303			1.DEF	
DF062: Combustion misfire on cylinder 4	0304			1.DEF	
DF063: Combustion misfire on cylinder 5	0305			1.DEF	
DF064: Combustion misfire on cylinder 6	0306			1.DEF	
DF089: Inlet manifold pressure sensor circuit	0235	CC.1/CO.0/ 1.DEF/2.DEF/ 3.DEF			CC.1/CO.0/ 1.DEF
DF097: Camshaft sensor circuit	0340	1.DEF/2.DEF			
DF098: Fuel temperature sensor circuit	0180	CO.1/CC.0			CO.1/CC.0
DF144: Preheating relay control circuit group 1	0380			CO.1/CC.0	
DF151: Main relay circuit	0685			1.DEF/2.DEF	
DF158: Preheating relay control circuit group 2	0382			CO.1/CC.0	
DF195: Camshaft/ engine speed sensor consistency	0016		1.DEF		
DF209: EGR valve position sensor circuit	0409	CC.1/CO.0/ 1.DEF			CC.1/CO.0/ 1.DEF
DF226: Damper valve circuit	2100			CC.1/CO.0	

GETtheMANUALS.org

Tool fault	Associated DTC code	Level 1 Fault warning light (Orange preheating warning light)	Level 2 fault warning light (Red overheating warning light)	No fault warning light lit	OBD warning light
DF272: EGR valve control circuit	0403	CC/CO/1.DEF			CC/1.DEF
DF276: Injector code programming	0611			1.DEF/2.DEF/ 3.DEF	
DF279: Engine overspeed	0219			1.DEF	
DF333: Injection → automatic transmission connection	C101				1.DEF
DF358: Injector control computer	2146	2.DEF	1.DEF/3.DEF		2.DEF
DF374: Computer	0606		1.DEF/2.DEF/ 3.DEF		
DF569: Turbocharging circuit	2263	1.DEF/2.DEF/ 3.DEF			
DF644: Fuel flow regulator circuit	0230	CC/CO.0	CC.1/1.DEF		
DF721: Engine overheating	0217			1.DEF	
DF891: Injector supply group 1	062D		1.DEF/CC		
DF892: Injector supply group 2	062E		1.DEF/CC		
DF947: Rail pressure limiter	0093		1.DEF		
DF948: GMV control circuit 1	0480			CC.1/CO.0	
DF949: GMV control circuit 2	0481			CC.1/CO.0	
DF950: GMV control circuit 3	0482			CC.1/CO.0	
DF951: Swirl flap position sensor circuit	0663	1.DEF/2.DEF			

GETtheMANUALS.org

Tool fault	Associated DTC code	Level 1 Fault warning light (Orange preheating warning light)	Level 2 fault warning light (Red overheating warning light)	No fault warning light lit	OBD warning light
DF952: Swirl flap circuit	0660	CC.1/CO.0/ 1.DEF/2.DEF			1.DEF
DF954: Turbocharger controller circuit	0243	1.DEF/2.DEF/ 3.DEF			
DF956: Lack of air in the inlet circuit	0401	1.DEF/2.DEF			1.DEF
DF957: Too much air in the inlet circuit	0402	1.DEF/2.DEF			1.DEF/ 2.DEF
DF958: Starter button circuit	0512			CC.1/CO.0	

GETtheMANUALS.org

DF001 PRESENT OR STORED	COOLANT TEMPERATURE SENSOR CIRCUIT CO.1 : Open circuit or short circuit to + 12 V CC.0 : Short circuit to earth 1.DEF: Inconsistency

NOTES	**Special notes:** Use bornier **Elé. 1681** for all operations on the engine management computer connectors. (see **Technical Note wiring diagram, Vel Satis phase 2**) (see **Technical Note wiring diagram, Espace IV phase 2**)

CO.1	***NOTES***	**Conditions for applying the fault finding procedure to stored faults:** The fault is declared as present if: – **level 1** and **OBD** warning lights are lit, – presence of **+ after ignition feed**, – the voltage of the coolant temperature sensor is greater than **4.974 V**, – the air temperature is greater than **25 °C**.

Manipulate the wiring harness between the engine management computer and the coolant temperature sensor to detect a status change (present ↔ stored).
Look for chafing damage on the harness.
If the connections are faulty and there is a repair procedure (see **Technical Note 6015A, Repairing electrical wiring, wiring: precautions for repairs**) repair the wiring, otherwise change the wiring.

Check the connection and condition of the **engine management computer connector**.
If the connections are faulty and there is a repair procedure (see **Technical Note 6015A, Repairing electrical wiring, wiring: precautions for repairs**) repair the wiring, otherwise change the wiring.

Check the connection and condition of the **coolant temperature sensor connector**.
If the connections are faulty and there is a repair procedure (see **Technical Note 6015A, Repairing electrical wiring, wiring: precautions for repairs**) repair the wiring, otherwise change the wiring.

Measure the coolant temperature sensor resistance between its connections **3C** and **3CK** of the connector for component **244**.
Replace the sensor if the **resistance** is not: **3511 Ω ± 176 at + 20 °C**
980 Ω ± 50 at + 50 °C
469 Ω ± 24 at + 70 °C
242 Ω ± 12 at + 90 °C

AFTER REPAIR	Deal with any faults detected by the **diagnostic tool**. Clear the computer memory. Carry out a road test followed by another check with the **diagnostic tool**.

GETtheMANUALS.org

DF001 **CONTINUED 1**	

Check the **insulation from + 12 V and earth, and the continuity and absence of interference resistance** on the following connection:
– connection code **3CK**,
between the coolant temperature sensor, **component code 244** and the engine management computer, **component code 120**.
Check the **insulation** from **+ 5 V and + 12 V** on the following connection:
– connection code **3C**,
between the coolant temperature sensor, **component code 244** and the engine management computer, **component code 120**.
If the connections are faulty and there is a repair procedure (see **Technical Note 6015A, Repairing electrical wiring, wiring: precautions for repairs**) repair the wiring, otherwise change the wiring.

If the fault is still present, check that the thermostat is working correctly.
Check the fill level and sealing of the cooling circuit (**see MR402 or MR 405 Mechanical, 19A, Cooling, Engine cooling system: Check**).

Clear the faults from memory and then start the engine.

If the **fault is still present**, contact the Techline.

CC.0	***NOTES***	**Conditions for applying the fault finding procedure to stored faults:** The fault is declared as present if: – **level 1** and **OBD** warning lights are lit, – presence of **+ after ignition feed**, – the coolant temperature sensor voltage is less than **0.12 V**.

Manipulate the wiring harness between the engine management computer and the coolant temperature sensor to detect a status change (present ↔ stored).
Look for chafing damage on the harness.
If the connections are faulty and there is a repair procedure (see **Technical Note 6015A, Repairing electrical wiring, wiring: precautions for repairs**) repair the wiring, otherwise change the wiring.

Check the connection and condition of the **engine management computer connector**.
If the connections are faulty and there is a repair procedure (see **Technical Note 6015A, Repairing electrical wiring, wiring: precautions for repairs**) repair the wiring, otherwise change the wiring.

Check the connection and condition of the **coolant temperature sensor connector**.
If the connections are faulty and there is a repair procedure (see **Technical Note 6015A, Repairing electrical wiring, wiring: precautions for repairs**) repair the wiring, otherwise change the wiring.

AFTER REPAIR	Deal with any faults detected by the **diagnostic tool**. Clear the computer memory. Carry out a road test followed by another check with the **diagnostic tool**.

GETtheMANUALS.org

DF001 **CONTINUED 2**	

Measure the coolant temperature sensor resistance between its connections **3C** and **3CK** of the connector for component **244**.
Replace the sensor if the **resistance** is not: **3511 Ω ± 176 at + 20 ˚C**
980 Ω ± 50 at + 50 ˚C
469 Ω ± 24 at + 70 ˚C
242 Ω ± 12 at + 90 ˚C

Check the **insulation, continuity and the absence of interference resistance** on the following connection:
– connection code **3CK**,
between the coolant temperature sensor, **component code 244** and the engine management computer, **component code 120**.
The resistance is equal to or greater than 10 MΩ.
Check the **insulation** from **+ 5 V** and **+ 12 V** on the following connection:
– connection code **3C**,
between the coolant temperature sensor, **component code 244** and the engine management computer, **component code 120**.
The resistance is equal to or greater than 10 MΩ.
If the connections are faulty and there is a repair procedure (see **Technical Note 6015A, Repairing electrical wiring, wiring: precautions for repairs**) repair the wiring, otherwise change the wiring.

If the fault is still present, check that the thermostat is working properly.
Check the fill level and sealing of the cooling circuit (see **MR402 or MR 405 Mechanical, 19A**).

Clear the faults from memory and then start the engine.
If the **fault is still present**, contact the Techline.

1.DEF	***NOTES***	**Priority when dealing with a number of faults:** Deal with statuses **DF001, CC.0** and **CO.1** first if they are present or stored.
		Conditions for applying the fault finding procedure to stored faults: The fault is declared as present if: – **level 1** and **OBD** warning lights are lit, – following an engine start, – coolant temperature **> - 40 ˚C and < 33 ˚C**.

Check the condition of the battery and the charging circuit (see **Technical Note 6014A, Checking the charging circuit**).
Check **the condition of the vehicle earths**.

AFTER REPAIR	Deal with any faults detected by the **diagnostic tool**. Clear the computer memory. Carry out a road test followed by another check with the **diagnostic tool**.

GETtheMANUALS.org

DF001 **CONTINUED 3**	

Manipulate the wiring harness between the engine management computer and the coolant temperature sensor to detect a status change (present ↔ stored).
Look for chafing damage on the harness.
If the connections are faulty and there is a repair procedure (see **Technical Note 6015A, Repairing electrical wiring, wiring: precautions for repairs**) repair the wiring, otherwise change the wiring.

Check the connection and condition of the **engine management computer connector**.
If the connections are faulty and there is a repair procedure (see **Technical Note 6015A, Repairing electrical wiring, wiring: precautions for repairs**) repair the wiring, otherwise change the wiring.

Check the connection and condition of the **coolant temperature sensor connector**.
If the connections are faulty and there is a repair procedure (see **Technical Note 6015A, Repairing electrical wiring, wiring: precautions for repairs**) repair the wiring, otherwise change the wiring.

Measure the coolant temperature sensor resistance between its connections **3C** and **3CK** of the connector for component **244**.
Replace the sensor if the **resistance** is not: **3511 Ω ± 176 at + 20 °C**
980 Ω ± 50 at + 50 °C
469 Ω ± 24 at + 70 °C
242 Ω ± 12 at + 90 °C

Check **the insulation from earth, the continuity and absence of interference resistance** on the following connection:
– connection code **3CK**,
between the coolant temperature sensor, **component code 244** and the engine management computer, **component code 120**.
The resistance is equal to or greater than 10 MΩ.
Check the **insulation** from **+ 5 V** and **+ 12 V** on the following connection:
– connection code **3C**,
between the coolant temperature sensor, **component code 244** and the engine management computer, **component code 120**.
The resistance is equal to or greater than 10 MΩ.
If the connections are faulty and there is a repair procedure (see **Technical Note 6015A, Repairing electrical wiring, wiring: precautions for repairs**) repair the wiring, otherwise change the wiring.

If the fault is still present, check that the thermostat is working correctly.
Check the fill level and sealing of the cooling circuit (see **MR402 or MR 405 Mechanical, 19A**).

Clear the faults from memory and then start the engine.

If the conformity check does not detect the fault, **contact the Techline**.

AFTER REPAIR	Deal with any faults detected by the **diagnostic tool**. Clear the computer memory. Carry out a road test followed by another check with the **diagnostic tool**.

GETtheMANUALS.org

DF002 PRESENT OR STORED	AIR TEMPERATURE SENSOR CIRCUIT CC.0 : Short circuit to earth CO.1 : Open circuit or short circuit to + 12 V

NOTES	**Special notes:** Use bornier **Elé. 1681** for all operations on the engine management computer connectors. Does not affect the inlet air temperature sensor (**inlet manifold**). (see **Technical Note wiring diagram, Vel Satis phase 2**) (see **Technical Note wiring diagram, Espace IV phase 2**)

CC.0	***NOTES***	**Conditions for applying the fault finding procedure to stored faults:** – The fault is declared present if the sensor voltage is less than **0.10 V**, – **OBD** indicator light is on.

Manipulate the wiring between the engine management computer and the air flow sensor air temperature sensor to detect a change of status (present ↔ stored).
Look for possible damage to the harness, and check the connection and the condition of the flowmeter air temperature sensor and its connections.
If the connections are faulty and there is a repair procedure (see **Technical Note 6015A, Repairing electrical wiring, wiring: precautions for repairs**) repair the wiring, otherwise change the wiring.
Disconnect the injection computer connector and the flow meter air temperature sensor connector.

Measure the flow sensor air temperature sensor resistance between connections **3B** and **3DU** of the connector for component **799**.
Replace the sensor if the **resistance** is not: **5499 Ω ± 275 at + 0 °C**
3604 Ω ± 180 at + 10 °C
2420 Ω ± 121 at + 20 °C

Check for **insulation against earth, continuity and absence of interference resistance** on the following connections:
– connection code **3B**,
between the flow sensor air temperature sensor, **component code 799** and the engine management computer, **component code 120**.
The resistance is equal to or greater than 10 MΩ.
If the connections are faulty and there is a repair procedure (see **Technical Note 6015A, Repairing electrical wiring, wiring: precautions for repairs**) repair the wiring, otherwise change the wiring.

If the **fault is still present**, contact the Techline.

AFTER REPAIR	Deal with any faults detected by the **diagnostic tool**. Clear the computer memory. Carry out a road test followed by another check with the **diagnostic tool**.

GETtheMANUALS.org

DF002 **CONTINUED 1**	

CO.1	***NOTES***	**Conditions for applying the fault finding procedure to stored faults:** – The fault is declared present if the sensor voltage is greater than **4.88 V**, – **OBD** indicator light is on.

Manipulate the wiring between the engine management computer and the air flow sensor air temperature sensor to detect a change of status (present ↔ stored).
Look for any damage to the wiring and check the **connection** and **condition** of the flow meter air temperature sensor and its connections.
If the connections are faulty and there is a repair procedure (see **Technical Note 6015A, Repairing electrical wiring, wiring: precautions for repairs**) repair the wiring, otherwise change the wiring.
Disconnect the injection computer connector and the flow meter air temperature sensor connector.

Measure the flow sensor air temperature sensor resistance between connections **3B** and **3DU** of the connector for component **799**.
Replace the sensor if the **resistance** is not: **5499 Ω ± 275 at + 0 °C**
3604 Ω ± 180 at + 10 °C
2420 Ω ± 121 at + 20 °C

Check for **insulation against earth, continuity and absence of interference resistance** on the following connections:
– connection code **3B**,
between the flow sensor air temperature sensor, **component code 799** and the engine management computer, **component code 120**.
The resistance is equal to or greater than 10 MΩ.
If the connections are faulty and there is a repair procedure (see **Technical Note 6015A, Repairing electrical wiring, wiring: precautions for repairs**) repair the wiring, otherwise change the wiring.

If the **fault is still present**, contact the Techline.

AFTER REPAIR	Deal with any faults detected by the **diagnostic tool**. Clear the computer memory. Carry out a road test followed by another check with the **diagnostic tool**.

GETtheMANUALS.org

DF003 PRESENT OR STORED	ATMOSPHERIC PRESSURE SENSOR CIRCUIT CO.0 : Open circuit or short circuit to earth CC.1 : Short circuit to + 12 V

NOTES	**Special notes:** Use bornier **Elé. 1681** for all operations on the engine management computer connectors.

CO.0	***NOTES***	**Conditions for applying the fault finding procedure to stored faults:** The fault is declared as present if: – the atmospheric pressure sensor voltage is less than **0.12 V**, – the engine is started, – **level 1** and **OBD** warning lights are lit.

If the fault is stored, clear the fault using the **diagnostic tool**.
If the **fault is present or persists, deal with any other faults**. If the **fault is still present**, contact the Techline.

CC.1	***NOTES***	**Conditions for applying the fault finding procedure to stored faults:** The fault is declared as present if: – the atmospheric pressure sensor voltage is greater than **4.39 V**, – the engine is started, – **level 1** and **OBD** warning lights are lit.

If the fault is stored, clear the fault using the **diagnostic tool**.
If the **fault is present or persists, deal with any other faults**. If the **fault is still present,** contact the Techline.

AFTER REPAIR	Deal with any faults detected by the **diagnostic tool**. Clear the computer memory. Carry out a road test followed by another check with the **diagnostic tool**.

GETtheMANUALS.org

DF005 PRESENT OR STORED	ENGINE SPEED SENSOR CIRCUIT 1.DEF: Inconsistency 2.DEF: No signal

NOTES	**Special notes:** Use bornier **Elé. 1681** for all operations on the engine management computer connectors. (see **Technical Note wiring diagram, Vel Satis phase 2**) (see **Technical Note wiring diagram, Espace IV phase 2**)

1.DEF	***NOTES***	**Conditions for applying the fault finding procedure to stored faults:** The fault is declared as present if: – the computer receives an incorrect signal from the flywheel sensor (value other than 56 pulses per revolution or signal interference), – with the engine running, – defective sensor, – the harness or connections are faulty, – there is an incorrectly positioned sensor, – damaged target (timing side), – **level 1** and **OBD** warning lights are lit.

Check that the battery **voltage** is greater than **10 V**. Replace the battery if necessary.
Manipulate the wiring harness between the engine management computer and the engine speed sensor to detect a status change (present ↔ stored). Look for chafing damage on the harness. If the connections are faulty and there is a repair procedure (see **Technical Note 6015A, Repairing electrical wiring, wiring: precautions for repairs**) repair the wiring, otherwise change the wiring.
Check the connection and condition of the **computer connector**. If the connections are faulty and there is a repair procedure (see **Technical Note 6015A, Repairing electrical wiring, wiring: precautions for repairs**) repair the wiring, otherwise change the wiring.
Check the connection and condition **of the engine speed sensor connector**. If the connections are faulty and there is a repair procedure (see **Technical Note 6015A, Repairing electrical wiring, wiring: precautions for repairs**) repair the wiring, otherwise change the wiring.
Verify the **condition** of the earth connection of the **engine speed sensor harness shielding**. If the connections are faulty and there is a repair procedure (see **Technical Note 6015A, Repairing electrical wiring, wiring: precautions for repairs**) repair the wiring, otherwise change the wiring.

AFTER REPAIR	Deal with any faults detected by the **diagnostic tool**. Clear the computer memory. Carry out a road test followed by another check with the **diagnostic tool**.

GETtheMANUALS.org

DF005 **CONTINUED 1**	

Check the **air gap** between the engine speed sensor and the target (see **MR 402 or MR 405 Mechanical, 13B Diesel injection**). Repair if necessary.
Check the conformity of the target (broken, worn or damaged teeth). Repair if necessary.
Clear the faults from memory and then start the engine.
Perform another fault finding procedure on the computer. If the fault is still present, deal with any other faults. If the **fault is still present**, contact the Techline.

2.DEF	***NOTES***	**Conditions for applying the fault finding procedure to stored faults:** The fault is declared as present if: – the computer only receives the camshaft position sensor signal, – the computer does not receive the engine speed sensor signal, **with the engine running**, – with the engine running, – defective sensor, – the harness or connections are faulty, – there is an incorrectly positioned sensor, – **level 1** and **OBD** warning lights are lit.

Check that the battery **voltage** is greater than **10 V**. Check **the condition of the vehicle earths** and the charging circuit (see **Technical Note 6014A, Checking the charging circuit**). Replace the battery if necessary.
Manipulate the wiring harness between the engine management computer and the engine speed sensor to detect a status change (present ↔ stored). Look for chafing damage on the harness. If the connections are faulty and there is a repair procedure (see **Technical Note 6015A, Repairing electrical wiring, wiring: precautions for repairs**) repair the wiring, otherwise change the wiring.
Check the connection and condition of the **computer connector**. If the connections are faulty and there is a repair procedure (see **Technical Note 6015A, Repairing electrical wiring, wiring: precautions for repairs**) repair the wiring, otherwise change the wiring.
Check the connection and condition **of the engine speed sensor connector**. If the connections are faulty and there is a repair procedure (see **Technical Note 6015A, Repairing electrical wiring, wiring: precautions for repairs**) repair the wiring, otherwise change the wiring.

AFTER REPAIR	Deal with any faults detected by the **diagnostic tool**. Clear the computer memory. Carry out a road test followed by another check with the **diagnostic tool**.

GETtheMANUALS.org

DF005 **CONTINUED 2**	

Check **the insulation from earth, the continuity and absence of interference resistance** on the following connection: – connection code **3BG**, between the engine speed sensor, **component code 149** and the engine management computer, **component code 120**. The resistance is equal to or greater than 10 MΩ. If the connections are faulty and there is a repair procedure (see **Technical Note 6015A, Repairing electrical wiring, wiring: precautions for repairs**) repair the wiring, otherwise change the wiring.
Check **the insulation from earth, the continuity and absence of interference resistance** on the following connection: – connection code **3BL**, between the engine speed sensor, **component code 149** and the engine management computer, **component code 120**. The resistance is equal to or greater than 10 MΩ. If the connections are faulty and there is a repair procedure (see **Technical Note 6015A, Repairing electrical wiring, wiring: precautions for repairs**) repair the wiring, otherwise change the wiring.
Check **the insulation from earth, the continuity and absence of interference resistance** on the following connection: – connection code **5CS**, between the engine speed sensor, **component code 149** and the engine management computer, **component code 120**. The resistance is equal to or greater than 10 MΩ. If the connections are faulty and there is a repair procedure (see **Technical Note 6015A, Repairing electrical wiring, wiring: precautions for repairs**) repair the wiring, otherwise change the wiring.
If the fault is still present, check the **condition** of the flywheel signal sensor electric wiring harness **shielding earth**. If the connections are faulty and there is a repair procedure (see **Technical Note 6015A, Repairing electrical wiring, wiring: precautions for repairs**) repair the wiring, otherwise change the wiring.
Check that the **earth connection** of the camshaft position sensor electric wiring harness **shielding** is in **good condition**.
If the **fault is still present**, contact the Techline.

AFTER REPAIR	Deal with any faults detected by the **diagnostic tool**. Clear the computer memory. Carry out a road test followed by another check with the **diagnostic tool**.

GETtheMANUALS.org

DF007 PRESENT OR STORED	RAIL PRESSURE SENSOR CIRCUIT CO.1 : Open circuit or short circuit to + 12 V CC.0 : Short circuit to earth 1.DEF: Inconsistency CC : Short circuit

NOTES	**Special notes:** Use bornier **Elé. 1681** for all operations on the engine management computer connectors. (see **Technical Note wiring diagram, Vel Satis phase 2**) (see **Technical Note wiring diagram, Espace IV phase 2**)

CO.1	***NOTES***	**Special notes:** – fast idling at **1000 rpm**, – limitation of performance.
		Conditions for applying the fault finding procedure to stored faults: The fault is declared as present if: – presence of **+ after ignition feed**, – the rail pressure sensor voltage is greater than **4.56 V**, – **level 1** and **OBD** warning lights are lit.

Manipulate the wiring harness between the engine management computer and the rail pressure sensor to detect a status change (present ↔ stored).
Look for chafing damage on the harness.
If the connections are faulty and there is a repair procedure (see **Technical Note 6015A, Repairing electrical wiring, wiring: precautions for repairs**) repair the wiring, otherwise change the wiring.

Check the connection and condition of the **computer connector**.
If the connections are faulty and there is a repair procedure (see **Technical Note 6015A, Repairing electrical wiring, wiring: precautions for repairs**) repair the wiring, otherwise change the wiring.

Check the **connection and condition of the rail pressure sensor connector**.
If the connections are faulty and there is a repair procedure (see **Technical Note 6015A, Repairing electrical wiring, wiring: precautions for repairs**) repair the wiring, otherwise change the wiring.

AFTER REPAIR	Deal with any faults detected by the **diagnostic tool**. Clear the computer memory. Carry out a road test followed by another check with the **diagnostic tool**.

GETtheMANUALS.org

DF007 **CONTINUED 1**	

Check for **insulation from + 12 V, the continuity and absence of interference resistance** on the following connections:
– connection code **3CJ**,
– connection code **3LY**,
between the rail pressure sensor, **component code 1032** and the engine management computer, **component code 120**.
If the connections are faulty and there is a repair procedure (see **Technical Note 6015A, Repairing electrical wiring, wiring: precautions for repairs**) repair the wiring, otherwise change the wiring.
If all the connections are correct.
Check for **earth** on the following connection:
– connection code **3CJ**,
between the rail pressure sensor, **component code 1032** and the engine management computer, **component code 120**.
Check for **+ 5 V** on the following connection:
– connection code **3AX**,
between the rail pressure sensor, **component code 1032** and the engine management computer, **component code 120**.
If the connections are faulty and there is a repair procedure (see **Technical Note 6015A, Repairing electrical wiring, wiring: precautions for repairs**) repair the wiring, otherwise change the wiring.

If the fault is still present, replace the injector rail.
Clear the faults.
Start the engine.

If the fault is still present, **contact the Techline**.

CC.0	***NOTES***	**Special notes:** – fast idling at **1000 rpm**, – limitation of performance.
		Conditions for applying the fault finding procedure to stored faults: The fault is declared as present if: – presence of **+ after ignition feed**, – the rail pressure sensor voltage is less than **0.67 V**, – **level 1** and **OBD** warning lights are lit.

Manipulate the wiring harness between the engine management computer and the rail pressure sensor to detect a status change (present ↔ stored).
Look for chafing damage on the harness.
If the connections are faulty and there is a repair procedure (see **Technical Note 6015A, Repairing electrical wiring, wiring: precautions for repairs**) repair the wiring, otherwise change the wiring.

AFTER REPAIR	Deal with any faults detected by the **diagnostic tool**. Clear the computer memory. Carry out a road test followed by another check with the **diagnostic tool**.

GETtheMANUALS.org

DF007 **CONTINUED 2**	

Check the connection and condition of the **computer connector**. If the connections are faulty and there is a repair procedure (see **Technical Note 6015A, Repairing electrical wiring, wiring: precautions for repairs**) repair the wiring, otherwise change the wiring.
Check the **connection and condition of the rail pressure sensor connector**. If the connections are faulty and there is a repair procedure (see **Technical Note 6015A, Repairing electrical wiring, wiring: precautions for repairs**) repair the wiring, otherwise change the wiring.
Check **the insulation from earth, the continuity and absence of interference resistance** on the following connection: – connection code **3LY**, between the rail pressure sensor, **component code 1032** and the engine management computer, **component code 120**. The resistance is equal to or greater than 10 MΩ. If the connections are faulty and there is a repair procedure (see **Technical Note 6015A, Repairing electrical wiring, wiring: precautions for repairs**) repair the wiring, otherwise change the wiring.
Check **the insulation from earth, the continuity and absence of interference resistance** on the following connection: – connection code **3AX**, between the rail pressure sensor, **component code 1032** and the engine management computer, **component code 120**. If the connections are faulty and there is a repair procedure (see **Technical Note 6015A, Repairing electrical wiring, wiring: precautions for repairs**) repair the wiring, otherwise change the wiring.
If this connection is correct. Check for **earth** on the following connection: – connection code **3CJ**, between the rail pressure sensor, **component code 1032** and the engine management computer, **component code 120**. Check for **+ 5 V** on the following connection: – connection code **3AX**, between the rail pressure sensor, **component code 1032** and the engine management computer, **component code 120**. If the connections are faulty and there is a repair procedure (see **Technical Note 6015A, Repairing electrical wiring, wiring: precautions for repairs**) repair the wiring, otherwise change the wiring.
If the fault is still present, replace the injector rail. Clear the faults. Start the engine.
If the fault is still present, **contact the Techline**.

AFTER REPAIR	Deal with any faults detected by the **diagnostic tool**. Clear the computer memory. Carry out a road test followed by another check with the **diagnostic tool**.

GETtheMANUALS.org

DF007 **CONTINUED 3**	

1.DEF	***NOTES***	**Special notes:** Engine stops or impossible to start. **Conditions for applying the fault finding procedure to stored faults:** The fault is declared as present if: – **+ after ignition feed present,** – the engine is switched off, – the **level 2** warning light is lit.

Check the sealing of the fuel circuit. Repair if necessary.
Check the sealing of the fuel pressure rail. Repair, if necessary **replace the fuel pressure rail**. If the fault is still present, **replace the injection pump**.
Clear the faults, then start the engine. If the fault is still present, **contact the Techline**.

CC	***NOTES***	**Special notes:** Limitation of performance. **Conditions for applying the fault finding procedure to stored faults:** The fault is declared as present if: – limitation of performance 30% accelerator pedal, – limitation of the quantity of fuel injected, – **level 1** and **OBD** warning lights are lit.

Check the injector rail sealing. Repair if necessary. If the fault is still present, **replace the injector rail**.
Check the sealing of the injector rail, pipes and pressure limiter; run command **AC029 High pressure circuit sealing test**. Repair if necessary. If the fault is still present, **replace the injection pump**.
Clear the faults from memory and then start the engine. If the fault is still present, **contact the Techline**.

AFTER REPAIR	Deal with any faults detected by the **diagnostic tool**. Clear the computer memory. Carry out a road test followed by another check with the **diagnostic tool**.

GETtheMANUALS.org

DF008 PRESENT OR STORED	PEDAL POTENTIOMETER CIRCUIT GANGED CIRCUIT 1 CO.0 : Open circuit or short circuit to earth CC.1 : Short circuit to + 12 V 1.DEF: Inconsistency

NOTES	**Special notes:** Use bornier **Elé. 1681** for all operations on the engine management computer connectors. (see **Technical Note wiring diagram, Vel Satis phase 2**) (see **Technical Note wiring diagram, Espace IV phase 2**)

CO.0	***NOTES***	**Conditions for applying the fault finding procedure to stored faults:** The fault is declared present if the voltage on the potentiometer no. 1 signal line is greater than **4.8 V**, – the **level 1** warning light comes on.

Manipulate the wiring harness between the engine management computer and the pedal potentiometer to detect a status change (present ↔ stored).
Look for chafing damage on the harness.
If the connections are faulty and there is a repair procedure (see **Technical Note 6015A, Repairing electrical wiring, wiring: precautions for repairs**) repair the wiring, otherwise change the wiring.

Check the connection and condition of the **computer connector**.
If the connections are faulty and there is a repair procedure (see **Technical Note 6015A, Repairing electrical wiring, wiring: precautions for repairs**) repair the wiring, otherwise change the wiring.

Check the connection and condition of the **pedal potentiometer connector**.
If the connections are faulty and there is a repair procedure (see **Technical Note 6015A, Repairing electrical wiring, wiring: precautions for repairs**) repair the wiring, otherwise change the wiring.

Check for **insulation against earth, continuity and absence of interference resistance** on the following connections:
– connection code **3LR**,
– connection code **3LS**,
between the pedal potentiometer gang 1, **component code 921** and the engine management computer, **component code 120**.
The resistance is equal to or greater than 10 MΩ.
If the connections are faulty and there is a repair procedure (see **Technical Note 6015A, Repairing electrical wiring, wiring: precautions for repairs**) repair the wiring, otherwise change the wiring.
If the fault is still present, replace the pedal potentiometer.

If the **fault is still present**, contact the Techline.

AFTER REPAIR	Deal with any faults detected by the **diagnostic tool**. Clear the computer memory. Carry out a road test followed by another check with the **diagnostic tool**.

GETtheMANUALS.org

DF008 **CONTINUED 1**	

CC.1	***NOTES***	**Conditions for applying the fault finding procedure to stored faults:** The fault is declared present if the voltage on the potentiometer no. 1 signal line is less than **0.34 V**. – the **level 1** warning light comes on.

Manipulate the wiring harness between the engine management computer and the pedal potentiometer to detect a status change (present ↔ stored). Look for chafing damage on the harness. If the connections are faulty and there is a repair procedure (see **Technical Note 6015A, Repairing electrical wiring, wiring: precautions for repairs**) repair the wiring, otherwise change the wiring.
Check the connection and condition of the **computer connector**. If the connections are faulty and there is a repair procedure (see **Technical Note 6015A, Repairing electrical wiring, wiring: precautions for repairs**) repair the wiring, otherwise change the wiring.
Check the **connection and condition of the pedal potentiometer sensor connector**. If the connections are faulty and there is a repair procedure (see **Technical Note 6015A, Repairing electrical wiring, wiring: precautions for repairs**) repair the wiring, otherwise change the wiring.
Check for **continuity and the absence of interference resistance** on the following connection: – connection code **3LT**, between the pedal potentiometer gang 1, **component code 921** and the engine management computer, **component code 120**. If the connections are faulty and there is a repair procedure (see **Technical Note 6015A, Repairing electrical wiring, wiring: precautions for repairs**) repair the wiring, otherwise change the wiring.
Check the **insulation** from **+ 12 V, the continuity and absence of interference resistance** on the following connection: – connection code **3LS**, between the pedal potentiometer gang 1, **component code 921** and the engine management computer, **component code 120**. If the connections are faulty and there is a repair procedure (see **Technical Note 6015A, Repairing electrical wiring, wiring: precautions for repairs**) repair the wiring, otherwise change the wiring.
If the fault is still present, replace the pedal potentiometer. Clear the faults, then start the engine.
If the **fault is still present**, contact the Techline.

AFTER REPAIR	Deal with any faults detected by the **diagnostic tool**. Clear the computer memory. Carry out a road test followed by another check with the **diagnostic tool**.

GETtheMANUALS.org

DF008 **CONTINUED 2**	

1.DEF	***NOTES***	**Conditions for applying the fault finding procedure to stored faults:** The fault is declared present when there is a large signal difference between potentiometers 1 and 2, – the **level 1** warning light comes on.

Manipulate the wiring harness between the engine management computer and the pedal potentiometer to detect a status change (present ↔ stored). Look for chafing damage on the harness. If the connections are faulty and there is a repair procedure (see **Technical Note 6015A, Repairing electrical wiring, wiring: precautions for repairs**) repair the wiring, otherwise change the wiring.
Check the connection and condition of the **computer connector**. If the connections are faulty and there is a repair procedure (see **Technical Note 6015A, Repairing electrical wiring, wiring: precautions for repairs**) repair the wiring, otherwise change the wiring.
Check the connection and condition of the **pedal potentiometer connector**. If the connections are faulty and there is a repair procedure (see **Technical Note 6015A, Repairing electrical wiring, wiring: precautions for repairs**) repair the wiring, otherwise change the wiring.
Check **the insulation, continuity and the absence of interference resistance** on the following connections: – connection code **3LR**, – connection code **3LS**, – connection code **3LT**, – connection code **3LU**, – connection code **3LW**, – connection code **3LV**, between the pedal potentiometer gangs 1 and 2, **component code 921** and the engine management computer, **component code 120**. If the connections are faulty and there is a repair procedure (see **Technical Note 6015A, Repairing electrical wiring, wiring: precautions for repairs**) repair the wiring, otherwise change the wiring.
If the fault is still present, replace the accelerator potentiometer (see **MR 402 or MR 405, Mechanical, 13B, Diesel Injection**). Clear the faults and start the engine.
If the **fault is still present**, contact the Techline.

AFTER REPAIR	Deal with any faults detected by the **diagnostic tool**. Clear the computer memory. Carry out a road test followed by another check with the **diagnostic tool**.

GETtheMANUALS.org

DF009 PRESENT OR STORED	PEDAL POTENTIOMETER CIRCUIT GANGED CIRCUIT 2 CO.0 : Open circuit or short circuit to earth CC.1 : Short circuit to + 12 V

NOTES	**Special notes:** Use bornier **Elé. 1681** for all operations on the engine management computer connectors. (see **Technical Note wiring diagram, Vel Satis phase 2**) (see **Technical Note wiring diagram, Espace IV phase 2**)

CO.0	***NOTES***	**Conditions for applying the fault finding procedure to stored faults:** The fault is declared present if the voltage on the potentiometer no. 2 signal line is greater than **3.64 V**, – the **level 1** warning light comes on.

Manipulate the wiring harness between the engine management computer and the pedal potentiometer to detect a status change (present ↔ stored).
Look for chafing damage on the harness.
If the connections are faulty and there is a repair procedure (see **Technical Note 6015A, Repairing electrical wiring, wiring: precautions for repairs**) repair the wiring, otherwise change the wiring.

Check the connection and condition of the **computer connector**.
If the connections are faulty and there is a repair procedure (see **Technical Note 6015A, Repairing electrical wiring, wiring: precautions for repairs**) repair the wiring, otherwise change the wiring.

Check the connection and condition of the **pedal potentiometer connector**.
If the connections are faulty and there is a repair procedure (see **Technical Note 6015A, Repairing electrical wiring, wiring: precautions for repairs**) repair the wiring, otherwise change the wiring.

Check **the insulation from earth, the continuity and absence of interference resistance** on the following connection:
– connection code **3LW**,
between the pedal potentiometer gang 2, **component code 921** and the engine management computer, **component code 120**.
The resistance is equal to or greater than 10 MΩ.
If the connections are faulty and there is a repair procedure (see **Technical Note 6015A, Repairing electrical wiring, wiring: precautions for repairs**) repair the wiring, otherwise change the wiring.

Check **the continuity and absence of interference resistance** of the following connections:
– connection code **3LU**,
– connection code **3LW**,
between the pedal potentiometer gang 2, **component code 921** and the engine management computer, **component code 120**.
If the connections are faulty and there is a repair procedure (see **Technical Note 6015A, Repairing electrical wiring, wiring: precautions for repairs**) repair the wiring, otherwise change the wiring.

AFTER REPAIR	Deal with any faults detected by the **diagnostic tool**. Clear the computer memory. Carry out a road test followed by another check with the **diagnostic tool**.

GETtheMANUALS.org

DF009 **CONTINUED**	

If the fault is still present, replace the pedal potentiometer.
Clear the faults, then start the engine.

If the **fault is still present**, contact the Techline.

CC.1	***NOTES***	**Conditions for applying the fault finding procedure to stored faults:** The fault is declared present if the voltage on the potentiometer no. 2 signal line is less than **0.17 V**, – the **level 1** warning light comes on.

Manipulate the wiring harness between the engine management computer and the pedal potentiometer to detect a status change (present ↔ stored).
Look for chafing damage on the harness.
If the connections are faulty and there is a repair procedure (see **Technical Note 6015A, Repairing electrical wiring, wiring: precautions for repairs**) repair the wiring, otherwise change the wiring.

Check the connection and condition of the **computer connector**.
If the connections are faulty and there is a repair procedure (see **Technical Note 6015A, Repairing electrical wiring, wiring: precautions for repairs**) repair the wiring, otherwise change the wiring.

Check the connection and condition of the **pedal potentiometer connector**.
If the connections are faulty and there is a repair procedure (see **Technical Note 6015A, Repairing electrical wiring, wiring: precautions for repairs**) repair the wiring, otherwise change the wiring.

Check for **insulation from + 12 V, the continuity and absence of interference resistance** on the following connections:
– connection code **3LV**,
– connection code **3LW**,
between the pedal potentiometer gang 2, **component code 921** and the engine management computer, **component code 120**.
If the connections are faulty and there is a repair procedure (see **Technical Note 6015A, Repairing electrical wiring, wiring: precautions for repairs**) repair the wiring, otherwise change the wiring.

If the fault is still present, replace the pedal potentiometer.
Clear the faults, then start the engine.

If the **fault is still present**, contact the Techline.

AFTER REPAIR	Deal with any faults detected by the **diagnostic tool**. Clear the computer memory. Carry out a road test followed by another check with the **diagnostic tool**.

GETtheMANUALS.org

DF011 PRESENT OR STORED	SENSOR SUPPLY VOLTAGE NO. 1 1.DEF: Below minimum threshold 2.DEF: Above maximum threshold

NOTES	**Priorities when dealing with a number of faults:** If one of the following faults is present at the same time: – **DF008 Pedal potentiometer circuit ganged circuit 1**, check that the pedal sensor connector is connected correctly. – **DF005 Engine speed sensor circuit**, check that the engine speed sensor connector is connected correctly.
	Conditions for applying the fault finding procedure to stored faults: The fault is declared present after the ignition has been switched on.
	Special notes: If the fault is present: – The cruise control/speed limiter function is deactivated. – Power is restricted. – **Level 1** and **OBD** warning lights are lit. (see **Technical Note wiring diagram, Vel Satis phase 2**) (see **Technical Note wiring diagram, Espace IV phase 2**)

The sensors connected to **feed no. 1** are:
– **pedal potentiometer gang 1,**
– **engine speed sensor.**
To locate a faulty sensor and/or connection, disconnect one of these sensors then check whether the fault becomes stored.
If the fault is still present, start the operation again with each sensor (one by one).
(Wait several seconds between each disconnection to allow the computer time to detect the fault).
If the fault is stored after disconnection, change the faulty sensor or repair the connection.
Clear the faults created by the multiple disconnections.

Check the connection and condition of the connector for the sensors and the injection computer.
If the connections are faulty and there is a repair procedure (see **Technical Note 6015A, Repairing electrical wiring, wiring: precautions for repairs**) repair the wiring, otherwise change the wiring.

If the sensors, **pedal potentiometer gang 1 and engine speed sensor** are disconnected, and the fault is still present:
Check **the insulation, continuity and the absence of interference resistance** on the following connections:
– connection code **3BL**,
– connection code **5CS**,
between the engine speed sensor, **component code 149** and the engine management computer, **component code 120**.
If the connections are faulty and there is a repair procedure (see **Technical Note 6015A, Repairing electrical wiring, wiring: precautions for repairs**) repair the wiring, otherwise change the wiring.

AFTER REPAIR	Deal with any faults detected by the **diagnostic tool**. Clear the computer memory. Carry out a road test followed by another check with the **diagnostic tool**.

GETtheMANUALS.org

DF011 **CONTINUED**	

Check **the insulation, continuity and the absence of interference resistance** on the following connections:
– connection code **3LR**,
– connection code **3LT**,
between the pedal potentiometer gang 1, **component code 921** and the engine management computer, **component code 120**.
If the connections are faulty and there is a repair procedure (see **Technical Note 6015A, Repairing electrical wiring, wiring: precautions for repairs**) repair the wiring, otherwise change the wiring.

If the fault is still present, contact the Techline.

AFTER REPAIR	Deal with any faults detected by the **diagnostic tool**. Clear the computer memory. Carry out a road test followed by another check with the **diagnostic tool**.

GETtheMANUALS.org

DF012 PRESENT OR STORED	SENSOR SUPPLY VOLTAGE NO. 2 1.DEF: Below minimum threshold 2.DEF: Above maximum threshold

NOTES	**Priorities when dealing with a number of faults:** If one or more of the following faults are present at the same time: – **DF089 Manifold pressure sensor circuit**, check that the connector for the **inlet manifold pressure sensor** is correctly connected. – **DF007 Rail pressure sensor circuit**, check that the rail pressure sensor connector is connected correctly. – **DF097 Camshaft sensor circuit**, check that the **camshaft sensor** connector is correctly connected. – **DF951 Swirl flap position sensor circuit**, check that the swirl flap sensor connector is correctly connected. – **DF209 EGR valve position sensor circuit**, check that the EGR valve position sensor connector is connected correctly.
	Conditions for applying the fault finding procedure to stored faults: The fault is declared present under **+ after ignition feed**.
	Special notes: If the fault is present: – **level 1** and **OBD** warning lights are lit. (see **Technical Note wiring diagram, Vel Satis phase 2**) (see **Technical Note wiring diagram, Espace IV phase 2**)

The sensors connected to **feed no. 2** are:
– **turbocharger pressure sensor,**
– **rail pressure sensor,**
– **camshaft sensor,**
– **EGR valve position sensor,**
– **swirl flap position sensors.**

To locate a sensor and/or connection concerned, disconnect one of these sensors then check if the fault becomes stored.
If the fault is still present, start the operation again with each sensor (one by one).
(Wait several seconds between each disconnection to allow the computer time to detect the fault).
If the fault is stored after disconnection, change the faulty sensor or repair the connection.
Clear the faults created by the multiple disconnections.

Check the connection and condition of the **connector for the sensors** and **the injection computer**.
If the connections are faulty and there is a repair procedure (see **Technical Note 6015A, Repairing electrical wiring, wiring: precautions for repairs**) repair the wiring, otherwise change the wiring.

AFTER REPAIR	Deal with any faults detected by the **diagnostic tool**. Clear the computer memory. Carry out a road test followed by another check with the **diagnostic tool**.

GETtheMANUALS.org

DF012 **CONTINUED 1**	

If the sensors, **turbocharger pressure sensor, rail pressure sensor, camshaft sensor, EGR valve position sensor and swirl flap position sensors** are disconnected, and the fault is still present:
Check **the insulation, continuity and the absence of interference resistance** on the following connections:
– connection code **3AX**,
– connection code **3CJ**,
between the back row swirl flap sensor, **component code 1293** and the engine management computer, **component code 120**.
If the connections are faulty and there is a repair procedure (see **Technical Note 6015A, Repairing electrical wiring, wiring: precautions for repairs**) repair the wiring, otherwise change the wiring.

Check **the insulation, continuity and the absence of interference resistance** on the following connections:
– connection code **3AX**,
– connection code **3CJ**,
between the front row swirl flap sensor, **component code 1709** and the engine management computer, **component code 120**.
If the connections are faulty and there is a repair procedure (see **Technical Note 6015A, Repairing electrical wiring, wiring: precautions for repairs**) repair the wiring, otherwise change the wiring.

Check **the insulation, continuity and the absence of interference resistance** on the following connections:
– connection code **3AX**,
– connection code **3CJ**,
between the turbocharger pressure sensor, **component code 1474** and the engine management computer, **component code 120**.
If the connections are faulty and there is a repair procedure (see **Technical Note 6015A, Repairing electrical wiring, wiring: precautions for repairs**) repair the wiring, otherwise change the wiring.

Check **the insulation, continuity and the absence of interference resistance** on the following connections:
– connection code **3AX**,
– connection code **3CJ**,
between the rail pressure sensor, **component code 1032** and the engine management computer, **component code 120**.
If the connections are faulty and there is a repair procedure (see **Technical Note 6015A, Repairing electrical wiring, wiring: precautions for repairs**) repair the wiring, otherwise change the wiring.

AFTER REPAIR	Deal with any faults detected by the **diagnostic tool**. Clear the computer memory. Carry out a road test followed by another check with the **diagnostic tool**.

GETtheMANUALS.org

DF012 **CONTINUED 2**	

Check **the insulation, continuity and the absence of interference resistance** on the following connections:
– connection code **3AX**,
– connection code **3CJ**,
between the EGR valve position sensor, **component code 169** and the engine management computer, **component code 120**.
If the connections are faulty and there is a repair procedure (see **Technical Note 6015A, Repairing electrical wiring, wiring: precautions for repairs**) repair the wiring, otherwise change the wiring.

Check **the insulation, continuity and the absence of interference resistance** on the following connections:
– connection code **3QL**,
– connection code **3QK**,
between the camshaft sensor, **component code 746** and the engine management computer, **component code 120**.
If the connections are faulty and there is a repair procedure (see **Technical Note 6015A, Repairing electrical wiring, wiring: precautions for repairs**) repair the wiring, otherwise change the wiring.

If the fault is still present, **contact the Techline**.

AFTER REPAIR	Deal with any faults detected by the **diagnostic tool**. Clear the computer memory. Carry out a road test followed by another check with the **diagnostic tool**.

GETtheMANUALS.org

DF013 PRESENT OR STORED	SENSOR SUPPLY VOLTAGE NO. 3 1.DEF: Below minimum threshold 2.DEF: Above maximum threshold

NOTES	**Priorities when dealing with a number of faults:** If one or more of the following faults are present at the same time: – **DF009 Pedal potentiometer circuit ganged circuit 2**, check that the pedal sensor connector is connected correctly. – **DF056 Air flow sensor circuit**, check that the air flow sensor connector is connected correctly.
	Conditions for applying the fault finding procedure to stored faults: The fault is declared present under **+ after ignition feed**.
	Special notes: If the fault is present: – cruise control is deactivated, – power is restricted, – **level 1** and **OBD** warning lights are lit. (see **Technical Note wiring diagram, Vel Satis phase 2**) (see **Technical Note wiring diagram, Espace IV phase 2**)

The sensors connected to **supply no. 3** are:
– **Accelerator pedal potentiometer gang 2.**
– **Air flow sensor.**
To locate a faulty sensor and/or connection, disconnect one of these sensors then check whether the fault becomes stored.
If the fault is still present, start the operation again with each sensor (one by one).
(Wait several seconds between each disconnection to allow the computer time to detect the fault).
If the fault is stored after disconnection, change the faulty sensor or repair the connection.
Clear the faults created by the multiple disconnections.

Check the connection and condition of the **connector for the sensors** and **the injection computer**.
If the connections are faulty and there is a repair procedure (see **Technical Note 6015A, Repairing electrical wiring, wiring: precautions for repairs**) repair the wiring, otherwise change the wiring.

If the sensors, **accelerator pedal potentiometer gang 2 and air flow sensor** are disconnected, and the fault is still present:
Check **the insulation, continuity and the absence of interference resistance** on the following connections:
– connection code **3DU**,
– connection code **3LU**,
between the air flow sensor, **component code 799** and the engine management computer, **component code 120**.
If the connections are faulty and there is a repair procedure (see **Technical Note 6015A, Repairing electrical wiring, wiring: precautions for repairs**) repair the wiring, otherwise change the wiring.

AFTER REPAIR	Deal with any faults detected by the **diagnostic tool**. Clear the computer memory. Carry out a road test followed by another check with the **diagnostic tool**.

GETtheMANUALS.org

DF013 **CONTINUED**	

Check **the insulation, continuity and the absence of interference resistance** on the following connections:
– connection code **3LU**,
– connection code **3LV**,
between the pedal potentiometer gang 2, **component code 921** and the engine management computer, **component code 120**.
If the connections are faulty and there is a repair procedure (see **Technical Note 6015A, Repairing electrical wiring, wiring: precautions for repairs**) repair the wiring, otherwise change the wiring.

If the fault is still present, **contact the Techline**.

AFTER REPAIR	Deal with any faults detected by the **diagnostic tool**. Clear the computer memory. Carry out a road test followed by another check with the **diagnostic tool**.

GETtheMANUALS.org

DF026 PRESENT OR STORED	CYLINDER 1 INJECTOR CONTROL CIRCUIT CO.0 : Open circuit or short circuit to earth CC.1 : Short circuit to + 12 V

NOTES	**Special notes:** Use bornier **Elé. 1681** for all operations on the engine management computer connectors. (see **Technical Note wiring diagram, Vel Satis phase 2**) (see **Technical Note wiring diagram, Espace IV phase 2**)

CO.0	***NOTES***	**Conditions for applying the fault finding procedure to stored faults:** The fault is declared as present if: – the computer detects a fault on the injector 1 control line, – engine speed greater than **500 rpm**, – battery voltage greater than **11 V**, – the **level 1** warning light comes on.

Manipulate the harness between the engine management computer and the injector control computer, then the injector control computer and injector 1 to detect a change of status (present ↔ stored).
Look for chafing damage on the harness.
If the connections are faulty and there is a repair procedure (see **Technical Note 6015A, Repairing electrical wiring, wiring: precautions for repairs**) repair the wiring, otherwise change the wiring.

Check the connection and condition of the **engine management computer connector and the injector control computer**.
If the connections are faulty and there is a repair procedure (see **Technical Note 6015A, Repairing electrical wiring, wiring: precautions for repairs**) repair the wiring, otherwise change the wiring.

Check the connection and condition **of the injector 1 connector**.
If the connections are faulty and there is a repair procedure (see **Technical Note 6015A, Repairing electrical wiring, wiring: precautions for repairs**) repair the wiring, otherwise change the wiring.

Measure the resistance of injector 1 between connections **3KW** and **3CR** of the connector for component **193**.
Replace the injector if the resistance **is greater than 50** Ω.

Check for **insulation against earth, continuity and absence of interference resistance** for the following connections:
– connection code **3CR**,
– connection code **3KW**,
– connection code **3H**,
between injector 1, **component code 193** and the injector control computer, **component code 1167**.
If the connections are faulty and there is a repair procedure (see **Technical Note 6015A, Repairing electrical wiring, wiring: precautions for repairs**) repair the wiring, otherwise change the wiring.

AFTER REPAIR	Deal with any faults detected by the **diagnostic tool**. Clear the computer memory. Carry out a road test followed by another check with the **diagnostic tool**.

GETtheMANUALS.org

DF026 **CONTINUED**	

Check the **insulation from earth, the continuity and absence of interference resistance** on the following connection:
– connection code **3QP**,
between the injector control computer, **component code 1167** and the engine management computer, **component code 120**.
If the connections are faulty and there is a repair procedure (see **Technical Note 6015A, Repairing electrical wiring, wiring: precautions for repairs**) repair the wiring, otherwise change the wiring.

Clear the fault memory and start the engine.
If the fault is still present, apply **test 10 Incorrect injector operation**.
Otherwise, replace the injector control computer (see **MR 402 or MR 405, Mechanical, 13B, Diesel injection**).
If the fault is still present, **contact the Techline**.

CC.1	***NOTES***	**Conditions for applying the fault finding procedure to stored faults:** The fault is declared as present if: – the computer detects a fault on the injector 1 control line, – engine speed is greater than **500 rpm**, – battery voltage is greater than **11 V**, – the **level 2** warning light is lit.

Manipulate the harness between the engine management computer and the injector control computer, then the injector control computer and injector 1 to detect a change of status (present ↔ stored).
Look for chafing damage on the harness.
If the connections are faulty and there is a repair procedure (see **Technical Note 6015A, Repairing electrical wiring, wiring: precautions for repairs**) repair the wiring, otherwise change the wiring.

Check the connection and condition of the **engine management computer connector and the injector control computer**.
If the connections are faulty and there is a repair procedure (see **Technical Note 6015A, Repairing electrical wiring, wiring: precautions for repairs**) repair the wiring, otherwise change the wiring.

Check the connection and condition **of the injector 1 connector**.
If the connections are faulty and there is a repair procedure (see **Technical Note 6015A, Repairing electrical wiring, wiring: precautions for repairs**) repair the wiring, otherwise change the wiring.

AFTER REPAIR	Deal with any faults detected by the **diagnostic tool**. Clear the computer memory. Carry out a road test followed by another check with the **diagnostic tool**.

GETtheMANUALS.org

DF026 **CONTINUED**	

Disconnect connector **B** from the injector control computer, **component code 1167**.
Switch on the ignition.
Check that the voltage is zero on connection **3CR** of the injector control computer.
If the connections are faulty and there is a repair procedure (see **Technical Note 6015A, Repairing electrical wiring, wiring: precautions for repairs**) repair the wiring, otherwise change the wiring.

Clear the fault memory and start the engine.
If the **fault is still present**, replace the injector control computer (see **MR 402 or MR 405 Mechanical, 13B, Diesel injection**).
If the **fault is still present**, contact the Techline.

AFTER REPAIR	Deal with any faults detected by the **diagnostic tool**. Clear the computer memory. Carry out a road test followed by another check with the **diagnostic tool**.

GETtheMANUALS.org

DF027 PRESENT OR STORED	CYLINDER 2 INJECTOR CONTROL CIRCUIT CO.0 : Open circuit or short circuit to earth CC.1 : Short circuit to + 12 V

NOTES	**Special notes:** Use bornier **Elé. 1681** for all operations on the engine management computer connectors. (see **Technical Note wiring diagram, Vel Satis phase 2**) (see **Technical Note wiring diagram, Espace IV phase 2**)

CO.0	***NOTES***	**Conditions for applying the fault finding procedure to stored faults:** The fault is declared as present if: – the computer detects a fault on the injector 2 control line, – engine speed is greater than **500 rpm**, – battery voltage is greater than **11 V**, – the **level 1** warning light comes on.

Manipulate the harness between the engine management computer and the injector control computer, then the injector control computer and injector 2 to detect a change of status (present ↔ stored).
Look for chafing damage on the harness.
If the connections are faulty and there is a repair procedure (see **Technical Note 6015A, Repairing electrical wiring, wiring: precautions for repairs**) repair the wiring, otherwise change the wiring.

Check the connection and condition of the **engine management computer connector and the injector control computer**.
If the connections are faulty and there is a repair procedure (see **Technical Note 6015A, Repairing electrical wiring, wiring: precautions for repairs**) repair the wiring, otherwise change the wiring.

Check the **connection and condition of the connector of injector 2**.
If the connections are faulty and there is a repair procedure (see **Technical Note 6015A, Repairing electrical wiring, wiring: precautions for repairs**) repair the wiring, otherwise change the wiring.

Measure the resistance of injector 2 between connections **3KX** and **3CS** of the connector for component **194**.
Replace the injector if the resistance **is greater than 50** Ω.

AFTER REPAIR	Deal with any faults detected by the **diagnostic tool**. Clear the computer memory. Carry out a road test followed by another check with the **diagnostic tool**.

GETtheMANUALS.org

DF027 **CONTINUED 1**	

Check for **insulation against earth, continuity and absence of interference resistance** for the following connections:
– connection code **3CS**,
– connection code **3KX**,
– connection code **3HA**,
between injector 2, **component code 194** and the injector control computer, **component code 1167**.
If the connections are faulty and there is a repair procedure (see **Technical Note 6015A, Repairing electrical wiring, wiring: precautions for repairs**) repair the wiring, otherwise change the wiring.

Check the **insulation from earth, the continuity and absence of interference resistance** on the following connection:
– connection code **3QQ**,
between the injector control computer, **component code 1167** and the engine management computer, **component code 120**.
If the connections are faulty and there is a repair procedure (see **Technical Note 6015A, Repairing electrical wiring, wiring: precautions for repairs**) repair the wiring, otherwise change the wiring.

Clear the fault memory and start the engine.
If the fault is still present, apply **test 10: Incorrect injector operation**.
Otherwise, replace the injector control computer (see **MR 402 or MR 405, Mechanical, 13B, Diesel injection**).
If the fault is still present, contact the Techline.

AFTER REPAIR	Deal with any faults detected by the **diagnostic tool**. Clear the computer memory. Carry out a road test followed by another check with the **diagnostic tool**.

GETtheMANUALS.org

DF027 **CONTINUED 2**	

CC.1	***NOTES***	**Conditions for applying the fault finding procedure to stored faults:** The fault is declared as present if: – the computer detects a fault on the injector 2 control line, – engine speed is greater than **500 rpm**, – battery voltage is greater than **11 V**, – the **level 2** warning light is lit.

Manipulate the harness between the engine management computer and the injector control computer, then the injector control computer and injector 2 to detect a change of status (present ↔ stored).
Look for chafing damage on the harness.
If the connections are faulty and there is a repair procedure (see **Technical Note 6015A, Repairing electrical wiring, wiring: precautions for repairs**) repair the wiring, otherwise change the wiring.

Check the connection and condition of the **engine management computer connector and the injector control computer**.
If the connections are faulty and there is a repair procedure (see **Technical Note 6015A, Repairing electrical wiring, wiring: precautions for repairs**) repair the wiring, otherwise change the wiring.

Check the **connection and condition of the connector of injector 2**.
If the connections are faulty and there is a repair procedure (see **Technical Note 6015A, Repairing electrical wiring, wiring: precautions for repairs**) repair the wiring, otherwise change the wiring.

Disconnect connector **B** from the injector control computer, **component code 1167**.
Switch on the ignition.
Check that the voltage is zero on connection **3CS** of the injector control computer.
If the connections are faulty and there is a repair procedure (see **Technical Note 6015A, Repairing electrical wiring, wiring: precautions for repairs**) repair the wiring, otherwise change the wiring.

Clear the fault memory and start the engine.
If the **fault is still present**, replace the injector control computer (see **MR 402 or MR 405 Mechanical, 13B, Diesel injection**).
If the **fault is still present**, contact the Techline.

AFTER REPAIR	Deal with any faults detected by the **diagnostic tool**. Clear the computer memory. Carry out a road test followed by another check with the **diagnostic tool**.

GETtheMANUALS.org

DF028 PRESENT OR STORED	INJECTOR CYLINDER 3 CONTROL CIRCUIT CO.0 : Open circuit or short circuit to earth CC.1 : Short circuit to + 12 V

NOTES	**Special notes:** Use bornier **Elé. 1681** for all operations on the engine management computer connectors. (see **Technical Note wiring diagram, Vel Satis phase 2**) (see **Technical Note wiring diagram, Espace IV phase 2**)

CO.0	***NOTES***	**Conditions for applying the fault finding procedure to stored faults:** The fault is declared as present if: – the computer detects a fault on the injector 3 control line, – engine speed is greater than **500 rpm**, – battery voltage is greater than **11 V**, – the **level 1** warning light comes on.

Manipulate the harness between the engine management computer and the injector control computer, then the injector control computer and injector 3 to detect a change of status (present ↔ stored).
Look for chafing damage on the harness.
If the connections are faulty and there is a repair procedure (see **Technical Note 6015A, Repairing electrical wiring, wiring: precautions for repairs**) repair the wiring, otherwise change the wiring.

Check the connection and condition of the **engine management computer connector and the injector control computer**.
If the connections are faulty and there is a repair procedure (see **Technical Note 6015A, Repairing electrical wiring, wiring: precautions for repairs**) repair the wiring, otherwise change the wiring.

Check the **connection and condition of the connector of injector 3**.
If the connections are faulty and there is a repair procedure (see **Technical Note 6015A, Repairing electrical wiring, wiring: precautions for repairs**) repair the wiring, otherwise change the wiring.

Measure the resistance of injector 3 between connections **3KY** and **3CT** of the connector for component **195**.
Replace the injector if the resistance **is greater than 50** Ω.

AFTER REPAIR	Deal with any faults detected by the **diagnostic tool**. Clear the computer memory. Carry out a road test followed by another check with the **diagnostic tool**.

GETtheMANUALS.org

DF028 **CONTINUED 1**	

Check the **insulation from earth, the continuity and absence of interference resistance** on the following connections:
– connection code **3CT**,
– connection code **3KY**,
– connection code **3H**,
between injector 3, **component code 195** and the injector control computer, **component code 1167**.
If the connections are faulty and there is a repair procedure (see **Technical Note 6015A, Repairing electrical wiring, wiring: precautions for repairs**) repair the wiring, otherwise change the wiring.

Check the **insulation from earth, the continuity and absence of interference resistance** on the following connection:
– connection code **3QR**,
between the injector control computer, **component code 1167** and the engine management computer, **component code 120**.
If the connections are faulty and there is a repair procedure (see **Technical Note 6015A, Repairing electrical wiring, wiring: precautions for repairs**) repair the wiring, otherwise change the wiring.

Clear the fault memory and start the engine.
If the fault is still present, apply **test 10: Incorrect injector operation**.
Otherwise, replace the injector control computer (see **MR 402 or MR 405, Mechanical, 13B, Diesel injection**).
If the **fault is still present**, contact the Techline.

AFTER REPAIR	Deal with any faults detected by the **diagnostic tool**. Clear the computer memory. Carry out a road test followed by another check with the **diagnostic tool**.

GETtheMANUALS.org

DF028 **CONTINUED 2**	

CC.1	***NOTES***	**Conditions for applying the fault finding procedure to stored faults:** The fault is declared as present if: – the computer detects a fault on the injector 3 control line, – engine speed is greater than **500 rpm**, – battery voltage is greater than **11 V**, – the **level 2** warning light is lit.

Manipulate the harness between the engine management computer and the injector control computer, then the injector control computer and injector 3 to detect a change of status (present ↔ stored).
Look for chafing damage on the harness.
If the connections are faulty and there is a repair procedure (see **Technical Note 6015A, Repairing electrical wiring, wiring: precautions for repairs**) repair the wiring, otherwise change the wiring.

Check the connection and condition of the **engine management computer connector and the injector control computer**.
If the connections are faulty and there is a repair procedure (see **Technical Note 6015A, Repairing electrical wiring, wiring: precautions for repairs**) repair the wiring, otherwise change the wiring.

Check the **connection and condition of the connector of injector 3**.
If the connections are faulty and there is a repair procedure (see **Technical Note 6015A, Repairing electrical wiring, wiring: precautions for repairs**) repair the wiring, otherwise change the wiring.

Disconnect connector **B** from the injector control computer, **component code 1167**.
Switch on the ignition.
Check that the voltage is zero on connection **3CT** of the injector control computer.
If the connections are faulty and there is a repair procedure (see **Technical Note 6015A, Repairing electrical wiring, wiring: precautions for repairs**) repair the wiring, otherwise change the wiring.

Clear the fault memory and start the engine.
If the **fault is still present**, replace the injector control computer (see **MR 402 or MR 405 Mechanical, 13B, Diesel injection**).
If the **fault is still present**, contact the Techline.

AFTER REPAIR	Deal with any faults detected by the **diagnostic tool**. Clear the computer memory. Carry out a road test followed by another check with the **diagnostic tool**.

GETtheMANUALS.org

DF029 PRESENT OR STORED	INJECTOR CYLINDER 4 CONTROL CIRCUIT CO.0 : Open circuit or short circuit to earth CC.1 : Short circuit to + 12 V

NOTES	**Special notes:** Use bornier **Elé. 1681** for all operations on the engine management computer connectors. (see **Technical Note wiring diagram, Vel Satis phase 2**) (see **Technical Note wiring diagram, Espace IV phase 2**)

CO.0	***NOTES***	**Conditions for applying the fault finding procedure to stored faults:** The fault is declared as present if: – the computer detects a fault on the injector 4 control line, – engine speed is greater than **500 rpm**, – battery voltage is greater than **11 V**, – the **level 1** warning light comes on.

Manipulate the harness between the engine management computer and the injector control computer, then the injector control computer and injector 4 to detect a change of status (present ↔ stored).
Look for chafing damage on the harness.
If the connections are faulty and there is a repair procedure (see **Technical Note 6015A, Repairing electrical wiring, wiring: precautions for repairs**) repair the wiring, otherwise change the wiring.

Check the connection and condition of the **engine management computer connector and the injector control computer**.
If the connections are faulty and there is a repair procedure (see **Technical Note 6015A, Repairing electrical wiring, wiring: precautions for repairs**) repair the wiring, otherwise change the wiring.

Check the connection and condition of the **injector 4 connector**.
If the connections are faulty and there is a repair procedure (see **Technical Note 6015A, Repairing electrical wiring, wiring: precautions for repairs**) repair the wiring, otherwise change the wiring.

Measure the resistance of injector 4 between connections **3KZ** and **3CU** of the connector for component **196**.
Replace the injector if the resistance **is greater than 50** Ω.

AFTER REPAIR	Deal with any faults detected by the **diagnostic tool**. Clear the computer memory. Carry out a road test followed by another check with the **diagnostic tool**.

GETtheMANUALS.org

DF029 **CONTINUED 1**	

Check for **insulation against earth, continuity and absence of interference resistance** for the following connections:
– connection code **3CU**,
– connection code **3KZ**,
– connection code **3HA**,
between injector 4, **component code 196** and the injector control computer, **component code 1167**.
If the connections are faulty and there is a repair procedure (see **Technical Note 6015A, Repairing electrical wiring, wiring: precautions for repairs**) repair the wiring, otherwise change the wiring.

Check the **insulation from earth, the continuity and absence of interference resistance** on the following connection:
– connection code **3QS**,
between the injector control computer, **component code 1167** and the engine management computer, **component code 120**.
If the connections are faulty and there is a repair procedure (see **Technical Note 6015A, Repairing electrical wiring, wiring: precautions for repairs**) repair the wiring, otherwise change the wiring.

Clear the fault memory and start the engine.
If the fault is still present, apply **test 10: Incorrect injector operation**.
Otherwise, replace the injector control computer (see **MR 402 or MR 405, Mechanical, 13B, Diesel injection**).
If the **fault is still present**, contact the Techline.

AFTER REPAIR	Deal with any faults detected by the **diagnostic tool**. Clear the computer memory. Carry out a road test followed by another check with the **diagnostic tool**.

GETtheMANUALS.org

DF029 **CONTINUED 2**	

CC.1	***NOTES***	**Conditions for applying the fault finding procedure to stored faults:** The fault is declared as present if: – the computer detects a fault on the injector 4 control line, – engine speed greater than **500 rpm**, – battery voltage is greater than **11 V**, – the **level 2** warning light is lit.

Manipulate the harness between the engine management computer and the injector control computer, then the injector control computer and injector 4 to detect a change of status (present ↔ stored).
Look for chafing damage on the harness.
If the connections are faulty and there is a repair procedure (see **Technical Note 6015A, Repairing electrical wiring, wiring: precautions for repairs**) repair the wiring, otherwise change the wiring.

Check the connection and condition of the **engine management computer connector and the injector control computer**.
If the connections are faulty and there is a repair procedure (see **Technical Note 6015A, Repairing electrical wiring, wiring: precautions for repairs**) repair the wiring, otherwise change the wiring.

Check the connection and condition of the **injector 4 connector**.
If the connections are faulty and there is a repair procedure (see **Technical Note 6015A, Repairing electrical wiring, wiring: precautions for repairs**) repair the wiring, otherwise change the wiring.

Disconnect connector **B** from the injector control computer, **component code 1167**.
Switch on the ignition.
Check that the voltage is zero on connection **3CU** of the injector control computer.
If the connections are faulty and there is a repair procedure (see **Technical Note 6015A, Repairing electrical wiring, wiring: precautions for repairs**) repair the wiring, otherwise change the wiring.

Clear the fault memory and start the engine.
If the **fault is still present**, replace the injector control computer (see **MR 402 or MR 405 Mechanical, 13B, Diesel injection**).
If the **fault is still present**, contact the Techline.

AFTER REPAIR	Deal with any faults detected by the **diagnostic tool**. Clear the computer memory. Carry out a road test followed by another check with the **diagnostic tool**.

GETtheMANUALS.org

DF030 PRESENT OR STORED	INJECTOR CYLINDER 5 CONTROL CIRCUIT CO.0 : Open circuit or short circuit to earth CC.1 : Short circuit to + 12 V

NOTES	**Special notes:** Use bornier **Elé. 1681** for all operations on the engine management computer connectors. (see **Technical Note wiring diagram, Vel Satis phase 2**) (see **Technical Note wiring diagram, Espace IV phase 2**)

CO.0	***NOTES***	**Conditions for applying the fault finding procedure to stored faults:** The fault is declared as present if: – the computer detects a fault on the injector 5 control line, – engine speed is greater than **500 rpm**, – battery voltage is greater than **11 V**, – the **level 1** warning light comes on.

Manipulate the harness between the engine management computer and the injector control computer, then the injector control computer and injector 5 to detect a change of status (present ↔ stored).
Look for chafing damage on the harness.
If the connections are faulty and there is a repair procedure (see **Technical Note 6015A, Repairing electrical wiring, wiring: precautions for repairs**) repair the wiring, otherwise change the wiring.

Check the connection and condition of the **engine management computer connector and the injector control computer**.
If the connections are faulty and there is a repair procedure (see **Technical Note 6015A, Repairing electrical wiring, wiring: precautions for repairs**) repair the wiring, otherwise change the wiring.

Check the **connection and condition of the injector 5 connector**.
If the connections are faulty and there is a repair procedure (see **Technical Note 6015A, Repairing electrical wiring, wiring: precautions for repairs**) repair the wiring, otherwise change the wiring.

Measure the resistance of injector 5 between connections **3DM** and **3ZM** of the connector for component **197**.
Replace the injector if the resistance **is greater than 50** Ω.

AFTER REPAIR	Deal with any faults detected by the **diagnostic tool**. Clear the computer memory. Carry out a road test followed by another check with the **diagnostic tool**.

GETtheMANUALS.org

DF030 **CONTINUED 1**	

Check the **insulation from earth, the continuity and absence of interference resistance** on the following connections:
– connection code **3DM**,
– connection code **3ZM**,
– connection code **3H**,
between injector 5, **component code 197** and the injector control computer, **component code 1167**.
If the connections are faulty and there is a repair procedure (see **Technical Note 6015A, Repairing electrical wiring, wiring: precautions for repairs**) repair the wiring, otherwise change the wiring.

Check the **insulation from earth, the continuity and absence of interference resistance** on the following connection:
– connection code **3QT**,
between the injector control computer, **component code 1167** and the engine management computer, **component code 120**.
If the connections are faulty and there is a repair procedure (see **Technical Note 6015A, Repairing electrical wiring, wiring: precautions for repairs**) repair the wiring, otherwise change the wiring.

Clear the fault memory and start the engine.
If the fault is still present, apply **test 10: Incorrect injector operation**.
Otherwise, replace the injector control computer (see **MR 402 or MR 405, Mechanical, 13B, Diesel injection**).
If the **fault is still present**, contact the Techline.

AFTER REPAIR	Deal with any faults detected by the **diagnostic tool**. Clear the computer memory. Carry out a road test followed by another check with the **diagnostic tool**.

GETtheMANUALS.org

DF030 **CONTINUED 2**	

CC.1	***NOTES***	**Conditions for applying the fault finding procedure to stored faults:** The fault is declared as present if: – the computer detects a fault on the injector 5 control line, – engine speed is greater than **500 rpm**, – battery voltage is greater than **11 V**, – the **level 2** warning light is lit.

Manipulate the harness between the engine management computer and the injector control computer, then the injector control computer and injector 5 to detect a change of status (present ↔ stored).
Look for chafing damage on the harness.
If the connections are faulty and there is a repair procedure (see **Technical Note 6015A, Repairing electrical wiring, wiring: precautions for repairs**) repair the wiring, otherwise change the wiring.

Check the connection and condition of the **engine management computer connector and the injector control computer**.
If the connections are faulty and there is a repair procedure (see **Technical Note 6015A, Repairing electrical wiring, wiring: precautions for repairs**) repair the wiring, otherwise change the wiring.

Check the **connection and condition of the injector 5 connector**.
If the connections are faulty and there is a repair procedure (see **Technical Note 6015A, Repairing electrical wiring, wiring: precautions for repairs**) repair the wiring, otherwise change the wiring.

Disconnect connector **B** from the injector control computer, **component code 1167**.
Switch on the ignition.
Check that the voltage is zero on connection **3DM** of the injector control computer.
If the connections are faulty and there is a repair procedure (see **Technical Note 6015A, Repairing electrical wiring, wiring: precautions for repairs**) repair the wiring, otherwise change the wiring.

Clear the fault memory and start the engine.
If the **fault is still present**, replace the injector control computer (see **MR 402 or MR 405 Mechanical, 13B, Diesel injection**).
If the **fault is still present**, contact the Techline.

AFTER REPAIR	Deal with any faults detected by the **diagnostic tool**. Clear the computer memory. Carry out a road test followed by another check with the **diagnostic tool**.

GETtheMANUALS.org

DF031 PRESENT OR STORED	INJECTOR CYLINDER 6 CONTROL CIRCUIT CO.0 : Open circuit or short circuit to earth CC.1 : Short circuit to + 12 V

NOTES	**Special notes:** Use bornier **Elé. 1681** for all operations on the engine management computer connectors. (see **Technical Note wiring diagram, Vel Satis phase 2**) (see **Technical Note wiring diagram, Espace IV phase 2**)

CO.0	***NOTES***	**Conditions for applying the fault finding procedure to stored faults:** The fault is declared as present if: – the computer detects a fault on the injector 6 control line, – engine speed is greater than **500 rpm**, – battery voltage is greater than **11 V**, – the **level 1** warning light comes on.

Manipulate the harness between the engine management computer and the injector control computer, then the injector control computer and injector 6 to detect a change of status (present ↔ stored).
Look for chafing damage on the harness.
If the connections are faulty and there is a repair procedure (see **Technical Note 6015A, Repairing electrical wiring, wiring: precautions for repairs**) repair the wiring, otherwise change the wiring.

Check the connection and condition of the **engine management computer connector and the injector control computer**.
If the connections are faulty and there is a repair procedure (see **Technical Note 6015A, Repairing electrical wiring, wiring: precautions for repairs**) repair the wiring, otherwise change the wiring.

Check the **connection and condition** of the injector 6 connector.
If the connections are faulty and there is a repair procedure (see **Technical Note 6015A, Repairing electrical wiring, wiring: precautions for repairs**) repair the wiring, otherwise change the wiring.

Measure the resistance of injector 6 between connections **3EK** and **3ZN** of the connector for component **198**.
Replace the injector if the resistance **is greater than 50** Ω.

AFTER REPAIR	Deal with any faults detected by the **diagnostic tool**. Clear the computer memory. Carry out a road test followed by another check with the **diagnostic tool**.

GETtheMANUALS.org

DF031 **CONTINUED 1**	

Check the **insulation from earth, the continuity and absence of interference resistance** on the following connections:
– connection code **3EK**,
– connection code **3ZN**,
– connection code **3HA**,
between injector 6, **component code 198** and the injector control computer, **component code 1167**.
If the connections are faulty and there is a repair procedure (see **Technical Note 6015A, Repairing electrical wiring, wiring: precautions for repairs**) repair the wiring, otherwise change the wiring.

Check the **insulation from earth, the continuity and absence of interference resistance** on the following connection:
– connection code **3QU**,
between the injector control computer, **component code 1167** and the engine management computer, **component code 120**.
If the connections are faulty and there is a repair procedure (see **Technical Note 6015A, Repairing electrical wiring, wiring: precautions for repairs**) repair the wiring, otherwise change the wiring.

Clear the fault memory and start the engine.
If the fault is still present, apply **test 10: Incorrect injector operation**.
Otherwise, replace the injector control computer (see **MR 402 or MR 405, Mechanical, 13B, Diesel injection**).
If the **fault is still present**, contact the Techline.

AFTER REPAIR	Deal with any faults detected by the **diagnostic tool**. Clear the computer memory. Carry out a road test followed by another check with the **diagnostic tool**.

GETtheMANUALS.org

DF031 **CONTINUED 2**	

CC.1	***NOTES***	**Conditions for applying the fault finding procedure to stored faults:** The fault is declared as present if: – the computer detects a fault on the injector 6 control line, – engine speed is greater than **500 rpm**, – battery voltage is greater than **11 V**, – the **level 2** warning light is lit.

Manipulate the harness between the engine management computer and the injector control computer, then the injector control computer and injector 6 to detect a change of status (present ↔ stored).
Look for chafing damage on the harness.
If the connections are faulty and there is a repair procedure (see **Technical Note 6015A, Repairing electrical wiring, wiring: precautions for repairs**) repair the wiring, otherwise change the wiring.

Check the connection and condition of the **engine management computer connector and the injector control computer**.
If the connections are faulty and there is a repair procedure (see **Technical Note 6015A, Repairing electrical wiring, wiring: precautions for repairs**) repair the wiring, otherwise change the wiring.

Check the **connection and condition** of the injector 6 connector.
If the connections are faulty and there is a repair procedure (see **Technical Note 6015A, Repairing electrical wiring, wiring: precautions for repairs**) repair the wiring, otherwise change the wiring.

Disconnect connector **B** from the injector control computer, **component code 1167**.
Switch on the ignition.
Check that the voltage is zero on connection **3EK** of the injector control computer.
If the connections are faulty and there is a repair procedure (see **Technical Note 6015A, Repairing electrical wiring, wiring: precautions for repairs**) repair the wiring, otherwise change the wiring.

Clear the fault memory and start the engine.
If the **fault is still present**, replace the injector control computer (see **MR 402 or MR 405 Mechanical, 13B, Diesel injection**).
If the **fault is still present**, contact the Techline.

AFTER REPAIR	Deal with any faults detected by the **diagnostic tool**. Clear the computer memory. Carry out a road test followed by another check with the **diagnostic tool**.

GETtheMANUALS.org

DF032 PRESENT OR STORED	HEATING ELEMENT 1 RELAY CONTROL CIRCUIT CO.0 : Open circuit or short circuit to earth CC.1 : Short circuit to + 12 V

NOTES	**Special notes:** Use bornier **Elé. 1681** for all operations on the engine management computer connectors. (see **Technical Note wiring diagram, Vel Satis phase 2**) (see **Technical Note wiring diagram, Espace IV phase 2**)

CO.0	***NOTES***	**Conditions for applying the fault finding procedure to stored faults:** The fault is declared as present if: – the relay is jammed in the closed position, – the relay is jammed in the open position, – the heating element is faulty, – defective harness or connections.

Disconnect the relay for **heating element 1**.
Measure the resistance of the relay coil, between connections **3FB** and **3JA** of the connector for component **1067**.
Replace the relay of **heating element 1**, if the resistance is not **90 Ω ± 9 at + 20 °C**.

Disconnect connector **A** from the **engine management computer**.
Check the **insulation from earth, the continuity and absence of interference resistance** on the following connection:
– connection code **3JA**,
between heating element relay 1, **component code 1067** and the engine management computer, **component code 120**.
The resistance is equal to or above **10 MΩ**.
If the connections are faulty and there is a repair procedure (see **Technical Note 6015A, Repairing electrical wiring, wiring: precautions for repairs**) repair the wiring, otherwise change the wiring.

Clear the fault memory and start the engine.
If the **fault is still present**, contact the Techline.

AFTER REPAIR	Deal with any faults detected by the **diagnostic tool**. Clear the computer memory. Carry out a road test followed by another check with the **diagnostic tool**.

GETtheMANUALS.org

DF032 **CONTINUED**	

CC.1	***NOTES***	**Conditions for applying the fault finding procedure to stored faults:** The fault is declared as present if: – the relay is jammed in the closed position, – the relay is jammed in the open position, – the heating element is faulty, – defective harness or connections.

Check the connection and condition of the **engine management computer connector**.
If the connections are faulty and there is a repair procedure (see **Technical Note 6015A, Repairing electrical wiring, wiring: precautions for repairs**) repair the wiring, otherwise change the wiring.

Check the **insulation from + 12 V, the continuity and absence of interference resistance** for the following connection:
– connection code **3JA**,
between heating element relay 1, **component code 1067** and the engine management computer, **component code 120**.
The resistance is equal to or above **10 M**Ω.
If the connections are faulty and there is a repair procedure (see **Technical Note 6015A, Repairing electrical wiring, wiring: precautions for repairs**) repair the wiring, otherwise change the wiring.

Clear the fault memory and start the engine.
If the **fault is still present**, contact the Techline.

AFTER REPAIR	Deal with any faults detected by the **diagnostic tool**. Clear the computer memory. Carry out a road test followed by another check with the **diagnostic tool**.

GETtheMANUALS.org

DF033 PRESENT OR STORED	HEATING ELEMENT 2 RELAY CONTROL CIRCUIT CO.0 : Open circuit or short circuit to earth CC.1 : Short circuit to + 12 V

NOTES	**Special notes:** Use bornier **Elé. 1681** for all operations on the engine management computer connectors. (see **Technical Note wiring diagram, Vel Satis phase 2**) (see **Technical Note wiring diagram, Espace IV phase 2**)

CO.0	***NOTES***	**Conditions for applying the fault finding procedure to stored faults:** The fault is declared as present if: – the relay is jammed in the closed position, – the relay is jammed in the open position, – the heating element is faulty, – the connections or the harness are faulty.

Disconnect the relay for **heating element 2**.
Measure the resistance of the relay coil, between connections **3FB** and **3JAA** of the connector for component **1068**.
Replace the relay of **heating element 2**, if the resistance is not **90 Ω ± 9 at + 20 °C**.

Disconnect connector **A** from the **engine management computer**.

Check the **insulation from earth, the continuity and absence of interference resistance** on the following connection:
– connection code **3JAA**,
between heating element 2 relay, **component code 1068** and the engine management computer, **component code 120**.
The resistance is equal to or above **10 MΩ**.
If the connections are faulty and there is a repair procedure (see **Technical Note 6015A, Repairing electrical wiring, wiring: precautions for repairs**) repair the wiring, otherwise change the wiring.

Clear the fault memory and start the engine.
If the **fault is still present**, contact the Techline.

AFTER REPAIR	Deal with any faults detected by the **diagnostic tool**. Clear the computer memory. Carry out a road test followed by another check with the **diagnostic tool**.

GETtheMANUALS.org

DF033 **CONTINUED**	

CC.1	***NOTES***	**Conditions for applying the fault finding procedure to stored faults:** The fault is declared as present if: – the relay is jammed in the closed position, – the relay is jammed in the open position, – the heating element is faulty, – defective harness or connections.

Check the connection and condition of the **engine management computer connector**.
If the connections are faulty and there is a repair procedure (see **Technical Note 6015A, Repairing electrical wiring, wiring: precautions for repairs**) repair the wiring, otherwise change the wiring.

Check the **insulation from + 12 V, the continuity and absence of interference resistance** for the following connection:
– connection code **3JAA**,
between heating element 2 relay, **component code 1068** and the engine management computer, **component code 120**.
The resistance is equal to or above **10 MΩ**.
If the connections are faulty and there is a repair procedure (see **Technical Note 6015A, Repairing electrical wiring, wiring: precautions for repairs**) repair the wiring, otherwise change the wiring.

Clear the fault memory and start the engine.
If the fault is still present, **contact the Techline**.

AFTER REPAIR	Deal with any faults detected by the **diagnostic tool**. Clear the computer memory. Carry out a road test followed by another check with the **diagnostic tool**.

GETtheMANUALS.org

DF034 PRESENT OR STORED	HEATING ELEMENT 3 RELAY CONTROL CIRCUIT CO.0 : Open circuit or short circuit to earth CC.1 : Short circuit to + 12 V

NOTES	**Special notes:** Use bornier **Elé. 1681** for all operations on the engine management computer connectors. (see **Technical Note wiring diagram, Vel Satis phase 2**) (see **Technical Note wiring diagram, Espace IV phase 2**)

CO.0	***NOTES***	**Conditions for applying the fault finding procedure to stored faults:** The fault is declared as present if: – the relay is jammed in the closed position, – the relay is jammed in the open position, – the heating element is faulty, – defective harness or connections.

Disconnect the relay for **heating element 3**.
Measure the resistance of the relay coil, between connections **3FB** and **3JAB** of the connector for component **1069**.
Replace the relay of **heating element 3**, if the resistance is not **91 Ω ± 9 at + 20 °C**.

Disconnect connector **A** from the **engine management computer**.

Check the **insulation from earth, the continuity and absence of interference resistance** on the following connection:
– connection code **3JAB**,
between heating element 3 relay, **component code 1069** and the engine management computer, **component code 120**.
The resistance is equal to or above **10 MΩ**.
If the connections are faulty and there is a repair procedure (see **Technical Note 6015A, Repairing electrical wiring, wiring: precautions for repairs**) repair the wiring, otherwise change the wiring.

Clear the fault memory and start the engine.
If the **fault is still present** contact the Techline,.

AFTER REPAIR	Deal with any faults detected by the **diagnostic tool**. Clear the computer memory. Carry out a road test followed by another check with the **diagnostic tool**.

GETtheMANUALS.org

DF034 **CONTINUED**	

CC.1	***NOTES***	**Conditions for applying the fault finding procedure to stored faults:** The fault is declared as present if: – the relay is jammed in the closed position, – the relay is jammed in the open position, – the heating element is faulty, – defective harness or connections.

Check the connection and condition of the **engine management computer connector**.
If the connections are faulty and there is a repair procedure (see **Technical Note 6015A, Repairing electrical wiring, wiring: precautions for repairs**) repair the wiring, otherwise change the wiring.

Check the **insulation from + 12 V, the continuity and absence of interference resistance** for the following connection:
– connection code **3JAB**,
between heating element 3 relay, **component code 1069** and the engine management computer, **component code 120**.
The resistance is equal to or above **10 MΩ**.
If the connections are faulty and there is a repair procedure (see **Technical Note 6015A, Repairing electrical wiring, wiring: precautions for repairs**) repair the wiring, otherwise change the wiring.

Clear the fault memory and start the engine.
If the **fault is still present**, contact the Techline.

AFTER REPAIR	Deal with any faults detected by the **diagnostic tool**. Clear the computer memory. Carry out a road test followed by another check with the **diagnostic tool**.

GETtheMANUALS.org

DF039 PRESENT OR STORED	INLET AIR TEMPERATURE SENSOR CIRCUIT CC.0 : Short circuit to earth CO.1 : Open circuit or short circuit to + 12 V

NOTES	**Special notes:** Use bornier **Elé. 1681** for all operations on the engine management computer connectors. **Does not affect the flow meter air temperature sensor.** **The inlet air temperature sensor is coupled with the turbocharger pressure sensor.** (see **Technical Note wiring diagram, Vel Satis phase 2**) (see **Technical Note wiring diagram, Espace IV phase 2**)

CC.0	***NOTES***	**Conditions for applying the fault finding procedure to stored faults:** The fault is declared as present if: – the air temperature sensor voltage is less than **0.22 V**, – presence of **+ after ignition feed**, – defective harness or connections.

Manipulate the wiring harness between the engine management computer and the manifold air temperature sensor to detect a status change (present ↔ stored).
Look for chafing damage on the harness.
If the connections are faulty and there is a repair procedure (see **Technical Note 6015A, Repairing electrical wiring, wiring: precautions for repairs**) repair the wiring, otherwise change the wiring.

Check the connection and condition of the **computer connector**.
If the connections are faulty and there is a repair procedure (see **Technical Note 6015A, Repairing electrical wiring, wiring: precautions for repairs**) repair the wiring, otherwise change the wiring.

Check the connection and status of the **manifold air temperature sensor connector**.
If the connections are faulty and there is a repair procedure (see **Technical Note 6015A, Repairing electrical wiring, wiring: precautions for repairs**) repair the wiring, otherwise change the wiring.

Measure the manifold air temperature sensor resistance between connections **3KQ** and **3CJ** of the connector for component **1474**.
Replace the sensor if the **resistance** is not: **3820 Ω ± 191 at + 10 °C**
2509 Ω ± 126 at + 20 °C
1686 Ω ± 83 at + 30 °C

AFTER REPAIR	Deal with any faults detected by the **diagnostic tool**. Clear the computer memory. Carry out a road test followed by another check with the **diagnostic tool**.

GETtheMANUALS.org

DF039 **CONTINUED 1**	

Check the **insulation from earth, the continuity and absence of interference resistance** on the following connection:
– connection code **3KQ**,
between the manifold air temperature sensor, **component code 1474** and the engine management computer, **component code 120**.
The resistance is equal to or above **10 MΩ**.
If the connections are faulty and there is a repair procedure (see **Technical Note 6015A, Repairing electrical wiring, wiring: precautions for repairs**) repair the wiring, otherwise change the wiring.

If the fault is still present, deal with any other faults.

If the fault is still present, **contact the Techline**.

CO.1	***NOTES***	**Priority when dealing with a number of faults:** Deal with fault **DF001 Coolant temperature sensor circuit** first, if it is present or stored.
		Conditions for applying the fault finding procedure to stored faults: The fault is declared as present if: – the air temperature sensor voltage is greater than **4.9 V**, – presence of **+ after ignition feed**, – engine coolant temperature above **- 25 ˚C**.

Manipulate the wiring harness between the engine management computer and the manifold air temperature sensor to detect a status change (present ↔ stored).
Look for chafing damage on the harness.
If the connections are faulty and there is a repair procedure (see **Technical Note 6015A, Repairing electrical wiring, wiring: precautions for repairs**) repair the wiring, otherwise change the wiring.

Check the connection and condition of the **computer connector**.
If the connections are faulty and there is a repair procedure (see **Technical Note 6015A, Repairing electrical wiring, wiring: precautions for repairs**) repair the wiring, otherwise change the wiring.

Check the connection and status of the **manifold air temperature sensor connector**.
If the connections are faulty and there is a repair procedure (see **Technical Note 6015A, Repairing electrical wiring, wiring: precautions for repairs**) repair the wiring, otherwise change the wiring.

AFTER REPAIR	Deal with any faults detected by the **diagnostic tool**. Clear the computer memory. Carry out a road test followed by another check with the **diagnostic tool**.

GETtheMANUALS.org

DF039 **CONTINUED 2**	

Measure the manifold air temperature sensor resistance between connections **3KQ** and **3CJ** of the connector for component **1474**.
Replace the sensor if the **resistance** is not: **3820 Ω ± 191 at + 10 °C**
2509 Ω ± 126 at + 20 °C
1686 Ω ± 83 at + 30 °C

Check for **insulation from + 12 V, the continuity and absence of interference resistance** on the following connections:
– connection code **3KQ**,
– connection code **3CJ**,
between the manifold air temperature sensor, **component code 1474** and the engine management computer, **component code 120**.
The resistance is equal to or above **10 MΩ**.
If the connections are faulty and there is a repair procedure (see **Technical Note 6015A, Repairing electrical wiring, wiring: precautions for repairs**) repair the wiring, otherwise change the wiring.

If the fault is still present, deal with any other faults.

If the fault is still present, **contact the Techline**.

AFTER REPAIR	Deal with any faults detected by the **diagnostic tool**. Clear the computer memory. Carry out a road test followed by another check with the **diagnostic tool**.

GETtheMANUALS.org

DF046 PRESENT OR STORED	BATTERY VOLTAGE 1.DEF: Below minimum threshold 2.DEF: Above maximum threshold

NOTES	**Special notes:** Use bornier **Elé. 1681** for all operations on the engine management computer connectors. (see **Technical Note wiring diagram, Vel Satis phase 2**) (see **Technical Note wiring diagram, Espace IV phase 2**)

1.DEF	***NOTES***	**Conditions for applying the fault finding procedure to stored faults:** The fault is declared as present if: – the computer is supplied with a voltage less than **11.6 V**, – the heating elements are disconnected, – with the engine running, – the **level 2** warning light is lit.

Check the charging circuit (see **Technical Note 6014A Checking the charging circuit**). Check **the condition** of the **vehicle earths**.
Check that the feed voltage is around **14.4 V** and that it is never less than **11.6 V**. Check the alternator supply. If correct, replace the alternator. If the connections are faulty and there is a repair procedure (see **Technical Note 6015A, Repairing electrical wiring, wiring: precautions for repairs**) repair the wiring, otherwise change the wiring.
Check **the continuity and absence of interference resistance** of the following connections: – the two connection codes **3FB**, – connection code **3AA**, between the main relay, **component code 238** and the engine management computer, **component code 120**. If the connections are faulty and there is a repair procedure (see **Technical Note 6015A, Repairing electrical wiring, wiring: precautions for repairs**) repair the wiring, otherwise change the wiring.
Check **the continuity and absence of interference resistance** of the following connections: – the three connection codes **N***, between the vehicle earth and the engine management computer, **component code 120**. If the connections are faulty and there is a repair procedure (see **Technical Note 6015A, Repairing electrical wiring, wiring: precautions for repairs**) repair the wiring, otherwise change the wiring.
If the **fault is still present**, contact the Techline.

AFTER REPAIR	Deal with any faults detected by the **diagnostic tool**. Clear the computer memory. Carry out a road test followed by another check with the **diagnostic tool**.

GETtheMANUALS.org

DF046 **CONTINUED**	

2.DEF	***NOTES***	**Conditions for applying the fault finding procedure to stored faults:** The fault is declared present when: – the computer is supplied with a voltage greater than **15.8 V**, – the heating elements are disconnected, – with the engine running, – the **level 2** warning light is lit.

Check the **condition of the battery** and the **charging circuit (see Technical Note 6014A, Checking the charging circuit**).
Check the **condition** of the vehicle **earths**.

Check that the supply voltage is around **14.4 V** and that it never exceeds **15.8 V**.
Replace the alternator if necessary.
If the connections are faulty and there is a repair procedure (see **Technical Note 6015A, Repairing electrical wiring, wiring: precautions for repairs**) repair the wiring, otherwise change the wiring.

If the fault is still present, **contact the Techline**.

AFTER REPAIR	Deal with any faults detected by the **diagnostic tool**. Clear the computer memory. Carry out a road test followed by another check with the **diagnostic tool**.

GETtheMANUALS.org

DF051 PRESENT OR STORED	CRUISE CONTROL/SPEED LIMITER FUNCTION 1.DEF: Fault on one of the two brake pedal contacts 2.DEF: Fault on both brake pedal contacts 3.DEF: Steering wheel control 4.DEF: Cruise control/speed limiter on-off circuit

NOTES	**Special notes:** If the fault is present, the cruise control/speed limiter function will be inhibited. (see **Technical Note wiring diagram, Vel Satis phase 2**) (see **Technical Note wiring diagram, Espace IV phase 2**)

1.DEF ***2.DEF***	***NOTES***	**Conditions for applying the fault finding procedure to stored faults:** If the fault is declared present after the brake pedal has been depressed. **Special notes:** Use bornier **Elé. 1681** for all operations on the engine management computer connectors.

When the driver depresses the brake pedal, statuses **ET704 and ET705** should change at the same time. In the event of inconsistency, check:
– the condition of fuses **F28 (20A)** and **F21 (10 A)** in the passenger compartment relay and fuse box,
– for **+ 12 V** APC on connections **AP10** and **SP13** of the switch,
– remove the brake switch and carry out the checks in the following table:

	Continuity between connections	**Insulation between connections**
Switch closed (Brake pedal released)	**SP13 and 5A**	**65A and AP10**
Switch open (Brake pedal depressed)	**65A and AP10**	**SP13 and 5A**

If these checks are not OK, replace the brake light switch.
If these checks are OK, check **the continuity and the absence of interference resistance** on the following connection:
– connection code **5A**,
between the brake light switch connector, **component code 160** and the engine management computer, **component code 120**.
If the connections are faulty and there is a repair procedure (see **Technical Note 6015A, Repairing electrical wiring, wiring: precautions for repairs**) repair the wiring, otherwise change the wiring.

AFTER REPAIR	Deal with any faults detected by the **diagnostic tool**. Clear the computer memory. Carry out a road test followed by another check with the **diagnostic tool**.

GETtheMANUALS.org

DF051 **CONTINUED 1**	

Disconnect the ABS/ESP computer and check the **continuity and insulation** from **+ 12 V** and from **earth** on the following connection:
– connection code **65A**,
between the brake pedal switch connector, **component code 160** and the ABS/ESP computer connector, **component code 1094**.
If the connections are faulty and there is a repair procedure (see **Technical Note 6015A, Repairing electrical wiring, wiring: precautions for repairs**) repair the wiring, otherwise change the wiring.

If the fault is still present, carry out **fault finding on the ABS/ESP**; if no irregularity is detected, carry out fault finding on the **multiplex network**.

AFTER REPAIR	Deal with any faults detected by the **diagnostic tool**. Clear the computer memory. Carry out a road test followed by another check with the **diagnostic tool**.

GETtheMANUALS.org

DF051 **CONTINUED 2**	

3.DEF	***NOTES***	Note: All operations on the connections beneath the steering wheel centre cover require the **airbag computer to be locked**.
		Special notes: Refer to the **Technical Note Wiring diagrams** for the vehicle to locate the wires and connections concerned.
		Conditions for applying the fault finding procedure to stored faults: If the fault is declared present after depressing the steering wheel switches.

Display **PR178 Cruise control switch voltage**. With no pressure on the steering wheel switches, the voltage shown should be: **4.9 V ± 0.2**.

If the voltage is not in this region, disconnect the steering wheel switch (black union **2 tracks** beneath the steering wheel centre cover) and display **PR178** again.
If the voltage becomes **4.9 V ± 0.2**, go to step 1.
If the voltage does not change, check the connections of the engine management computer.
Repair if necessary. If the fault is still present, go to step **a**, otherwise go to step **b**.

1 - Check the conformity of the steering wheel switches as follows: disconnect the **2-track** black connector under the central cover of the steering wheel (connect the ohmmeter on the steering wheel switch side). The measurement should be:
- **900** Ω (± 10 Ω) when the **Repeat** switch is pressed.

(or the one-touch switch **R** on the right of the steering wheel)
- **0** Ω (not more than 0.8 Ω) when the **Cancel** switch is pressed.

(or the one touch switch **O** on the right of the steering wheel)
- **300** Ω (± 10 Ω) when the **Set +** switch is pressed.

(or the one-touch switch on the left of the steering wheel)
- **100** Ω (± 10 Ω) when the **Set -** switch is pressed.

(or the one-touch switch on the left of the steering wheel)
- **Infinite resistance** in rest position.

If ***the values are not correct***, replace the steering wheel controls.
If ***the values are correct***, carry out the same measures from **connector A** of the engine management computer by connecting the ohmmeter between connections **86G and 86M** (**steering wheel control** connector **connected**).

a - If the fault is still present, check the connection between the engine management computer and the connector under the steering wheel, see **Wiring Diagrams Technical Note** (line resistance, open circuit, short circuit). Carry out the necessary repairs.

b - If the values are correct, clear the fault, switch off the ignition, wait until the end of the power latch* phase and switch on the ignition again.

If the fault reappears (after pressing the steering wheel controls), contact the Techline.

* The immobiliser warning light will flash a few seconds after switching off the ignition.

AFTER REPAIR	Deal with any faults detected by the **diagnostic tool**. Clear the computer memory. Carry out a road test followed by another check with the **diagnostic tool**.

GETtheMANUALS.org

DF051 **CONTINUED 3**	

4.DEF	***NOTES***	**Special notes:** – The cruise control function is inhibited. – Refer to the **Wiring diagrams** Technical Note for the vehicle to locate the wires and connections concerned. **Conditions for applying the fault finding procedure to stored faults:** If the fault reappears as present after: – pressing the cruise control/speed limiter ON/OFF switch.

Check the connection and condition of the **engine management computer connector A**.
If the connections are faulty and there is a repair procedure (see **Technical Note 6015A, Repairing electrical wiring, wiring: precautions for repairs**) repair the wiring, otherwise change the wiring.

Check the connection and condition of the connections for the cruise control/speed limiter on/off switch.
If the connections are faulty and there is a repair procedure (see **Technical Note 6015A, Repairing electrical wiring, wiring: precautions for repairs**) repair the wiring, otherwise change the wiring.

Cruise control/speed limiter on/off switch in speed limiter position:
Check the **continuity** between the following connections:
– connection code **AP10**,
– connection code **3PD**,
between the cruise control/speed limiter switch connector, **component code 1081** and the engine management computer, **component code 120**.
Check **the insulation** between the following connections:
– connection code **AP10**,
– connection code **3FX**,
between the cruise control/speed limiter switch connector, **component code 1081** and the engine management computer, **component code 120**.
If the connections are faulty and there is a repair procedure (see **Technical Note 6015A, Repairing electrical wiring, wiring: precautions for repairs**) repair the wiring, otherwise change the wiring.

AFTER REPAIR	Deal with any faults detected by the **diagnostic tool**. Clear the computer memory. Carry out a road test followed by another check with the **diagnostic tool**.

GETtheMANUALS.org

DF051 **CONTINUED 4**	

Cruise control/speed limiter on/off switch in cruise control position:
Check **the insulation** between the following connections:
– connection code **AP10**,
– connection code **3PD**,
between the cruise control/speed limiter switch connector, **component code 1081** and the engine management computer, **component code 120**.
Check the **continuity** between the following connections:
– connection code **AP10**,
– connection code **3FX**,
between the cruise control/speed limiter switch connector, **component code 1081** and the engine management computer, **component code 120**.
If the connections are faulty and there is a repair procedure (see **Technical Note 6015A, Repairing electrical wiring, wiring: precautions for repairs**) repair the wiring, otherwise change the wiring.

Check **the insulation, continuity and the absence of interference resistance** on the following connections:
– connection code **3FX**,
– connection code **3PD**,
between the cruise control/speed limiter switch connector, **component code 1081** and the engine management computer, **component code 120**.
If the connections are faulty and there is a repair procedure (see **Technical Note 6015A, Repairing electrical wiring, wiring: precautions for repairs**) repair the wiring, otherwise change the wiring.

If the fault is still present, contact the Techline.

AFTER REPAIR	Deal with any faults detected by the **diagnostic tool**. Clear the computer memory. Carry out a road test followed by another check with the **diagnostic tool**.

GETtheMANUALS.org

DF056 PRESENT OR STORED	AIR FLOW SENSOR CIRCUIT CO.0 : Open circuit or short circuit to earth CC.1 : Short circuit to + 12 V 1.DEF: Inconsistency 2.DEF: Permanent low signal

NOTES	**Special notes:** Use bornier **Elé. 1681** for all operations on the engine management computer connectors. (see **Technical Note wiring diagram, Vel Satis phase 2**) (see **Technical Note wiring diagram, Espace IV phase 2**)

CO.0	***NOTES***	**Conditions for applying the fault finding procedure to stored faults:** The fault is declared as present if: – the air flow sensor voltage is less than **0.2 V**, – presence of **+ after ignition feed**, – defective harness or connections.

Manipulate the wiring harness between the engine management computer and the air flow sensor to detect a change in status (present ↔ stored). Look for chafing damage on the harness. If the connections are faulty and there is a repair procedure (see **Technical Note 6015A, Repairing electrical wiring, wiring: precautions for repairs**) repair the wiring, otherwise change the wiring.
Check the connection and condition of the **computer connector**. If the connections are faulty and there is a repair procedure (see **Technical Note 6015A, Repairing electrical wiring, wiring: precautions for repairs**) repair the wiring, otherwise change the wiring.
Check the condition and connection of the **air flow sensor**. If the connections are faulty and there is a repair procedure (see **Technical Note 6015A, Repairing electrical wiring, wiring: precautions for repairs**) repair the wiring, otherwise change the wiring.
Check the condition of fuse **FM6 (10A)**. Replace the fuse, if necessary. If the connections are faulty and there is a repair procedure (see **Technical Note 6015A, Repairing electrical wiring, wiring: precautions for repairs**) repair the wiring, otherwise change the wiring.
Check the **insulation from earth, the continuity and absence of interference resistance** on the following connection: – connection code **3DV**, between the air flow sensor, **component code 799** and the engine management computer, **component code 120**. If the connections are faulty and there is a repair procedure (see **Technical Note 6015A, Repairing electrical wiring, wiring: precautions for repairs**) repair the wiring, otherwise change the wiring.
Clear the faults from memory and then start the engine. Check that the fault has disappeared. If the fault recurs, replace the air flow sensor.

AFTER REPAIR	Deal with any faults detected by the **diagnostic tool**. Clear the computer memory. Carry out a road test followed by another check with the **diagnostic tool**.

GETtheMANUALS.org

DF056 **CONTINUED 1**	

Clear the stored faults.
Restart the vehicle and wait **30 seconds**.

If the fault is still present, apply **test 5 Air flow sensor**.
Perform another fault finding procedure on the computer.
If the **fault recurs**, contact the Techline.

CC.1	***NOTES***	**Conditions for applying the fault finding procedure to stored faults:** The fault is declared present if: – the air flow sensor voltage is greater than **4.9 V**, – presence of **+ after ignition feed**, – defective harness or connections.

Manipulate the wiring harness between the engine management computer and the air flow sensor to detect a change in status (present ↔ stored).
Look for chafing damage on the harness.
If the connections are faulty and there is a repair procedure (see **Technical Note 6015A, Repairing electrical wiring, wiring: precautions for repairs**) repair the wiring, otherwise change the wiring.

Check the connection and condition of the **computer connector**.
If the connections are faulty and there is a repair procedure (see **Technical Note 6015A, Repairing electrical wiring, wiring: precautions for repairs**) repair the wiring, otherwise change the wiring.

Check the condition and connection of the **air flow sensor**.
If the connections are faulty and there is a repair procedure (see **Technical Note 6015A, Repairing electrical wiring, wiring: precautions for repairs**) repair the wiring, otherwise change the wiring.

Check the **insulation from + 12 V, the continuity and absence of interference resistance** for the following connection:
– connection code **3LU**,
between the air flow sensor, **component code 799** and the engine management computer, **component code 120**.
If the connections are faulty and there is a repair procedure (see **Technical Note 6015A, Repairing electrical wiring, wiring: precautions for repairs**) repair the wiring, otherwise change the wiring.

Check the **insulation from earth, the continuity and absence of interference resistance** on the following connection:
– connection code **3DV**,
between the air flow sensor, **component code 799** and the engine management computer, **component code 120**.
If the connections are faulty and there is a repair procedure (see **Technical Note 6015A, Repairing electrical wiring, wiring: precautions for repairs**) repair the wiring, otherwise change the wiring.

AFTER REPAIR	Deal with any faults detected by the **diagnostic tool**. Clear the computer memory. Carry out a road test followed by another check with the **diagnostic tool**.

GETtheMANUALS.org

DF056 **CONTINUED 2**	

Check the **insulation from + 5 V, the continuity and absence of interference resistance** on the following connection:
– connection code **3DU**,
between the air flow sensor, **component code 799** and the engine management computer, **component code 120**.
If the connections are faulty and there is a repair procedure (see **Technical Note 6015A, Repairing electrical wiring, wiring: precautions for repairs**) repair the wiring, otherwise change the wiring.

Clear the faults from memory and then start the engine.
Check that the fault has disappeared.
If the fault recurs, replace the air flow sensor.

Clear the stored faults.
Restart the vehicle and wait **30 seconds**.

If the fault is still present, deal with any other faults.
Apply **test 5 Air flowmeter**.
Perform another fault finding procedure on the computer.
If the **fault recurs**, contact the Techline.

AFTER REPAIR	Deal with any faults detected by the **diagnostic tool**. Clear the computer memory. Carry out a road test followed by another check with the **diagnostic tool**.

GETtheMANUALS.org

DF056 **CONTINUED 3**	

1.DEF	***NOTES***	**Priority when dealing with a number of faults:** Prioritise the other present or stored faults. **Conditions for applying the fault finding procedure to stored faults:** The fault is declared as present if: – fast idling at **1000 rpm** and limitation of performance, – **level 1** and **OBD** warning lights are lit, – turbocharger inactive, – presence of **+ after ignition feed**, – defective harness or connections.

Manipulate the wiring harness between the engine management computer and the air flow sensor to detect a change in status (present ↔ stored).
Look for chafing damage on the harness.
If the connections are faulty and there is a repair procedure (see **Technical Note 6015A, Repairing electrical wiring, wiring: precautions for repairs**) repair the wiring, otherwise change the wiring.

Check the connection and condition of the **computer connector**.
If the connections are faulty and there is a repair procedure (see **Technical Note 6015A, Repairing electrical wiring, wiring: precautions for repairs**) repair the wiring, otherwise change the wiring.

Check the condition and connection of the **air flow sensor**.
If the connections are faulty and there is a repair procedure (see **Technical Note 6015A, Repairing electrical wiring, wiring: precautions for repairs**) repair the wiring, otherwise change the wiring.

Check the entire air inlet circuit:
Apply **test 4: Turbocharging and air inlet circuit check**.

Check for **continuity and the absence of interference resistance** of the following connections:
– connection code **3LU**,
– connection code **3DV**,
– connection code **3DU**,
between the air flow sensor, **component code 799** and the engine management computer, **component code 120**.
If the connections are faulty and there is a repair procedure (see **Technical Note 6015A, Repairing electrical wiring, wiring: precautions for repairs**) repair the wiring, otherwise change the wiring.

Clear the faults from memory and then start the engine.
Wait **30 seconds** then restart computer fault finding; if the fault reappears, check conformity of the engine with the different parameters.

Apply **test 5 Air flowmeter**.
If the **fault is still present**, contact the Techline.

AFTER REPAIR	Deal with any faults detected by the **diagnostic tool**. Clear the computer memory. Carry out a road test followed by another check with the **diagnostic tool**.

GETtheMANUALS.org

DF056 **CONTINUED 4**	

2.DEF	***NOTES***	**Priority when dealing with a number of faults:** Prioritise the other present or stored faults. **Conditions for applying the fault finding procedure to stored faults:** The fault is declared as present if: – presence of **+ after ignition feed**, – defective harness or connections, – **OBD** indicator light is on.

Manipulate the wiring harness between the engine management computer and the air flow sensor to detect a change in status (present ↔ stored). Look for chafing damage on the harness. If the connections are faulty and there is a repair procedure (see **Technical Note 6015A, Repairing electrical wiring, wiring: precautions for repairs**) repair the wiring, otherwise change the wiring.
Check the connection and condition of the **computer connector**. If the connections are faulty and there is a repair procedure (see **Technical Note 6015A, Repairing electrical wiring, wiring: precautions for repairs**) repair the wiring, otherwise change the wiring.
Check the condition and connection of the **air flow sensor**. If the connections are faulty and there is a repair procedure (see **Technical Note 6015A, Repairing electrical wiring, wiring: precautions for repairs**) repair the wiring, otherwise change the wiring.
Check the entire air inlet circuit: Apply **test 4: Turbocharging and air inlet circuit check**.
Clear the faults from memory and then start the engine. Wait **30 seconds** then restart computer fault finding; if the fault reappears, check conformity of the engine with the different parameters.
Apply **test 5 Air flowmeter**. If the fault is still present, **contact the Techline**.

AFTER REPAIR	Deal with any faults detected by the **diagnostic tool**. Clear the computer memory. Carry out a road test followed by another check with the **diagnostic tool**.

GETtheMANUALS.org

DF058 PRESENT OR STORED	OIL TEMPERATURE SENSOR CIRCUIT CO.1 : Open circuit or short circuit to + 12 V CC.0 : Short circuit to earth

NOTES	**Special notes:** Use bornier **Elé. 1681** for all operations on the engine management computer connectors. (see **Technical Note wiring diagram, Vel Satis phase 2**) (see **Technical Note wiring diagram, Espace IV phase 2**)

CO.1	***NOTES***	**Conditions for applying the fault finding procedure to stored faults:** The fault is declared present: – if the voltage on the diagnostic line is greater than **4.97 V**, – the **level 1** warning light comes on.

Manipulate the wiring harness between the engine management computer and the oil temperature sensor to detect a status change (present ↔ stored).
Look for chafing damage on the harness.
If the connections are faulty and there is a repair procedure (see **Technical Note 6015A, Repairing electrical wiring, wiring: precautions for repairs**) repair the wiring, otherwise change the wiring.

Check the connection and condition of the **computer connector**.
If the connections are faulty and there is a repair procedure (see **Technical Note 6015A, Repairing electrical wiring, wiring: precautions for repairs**) repair the wiring, otherwise change the wiring.

Check the connection and condition of the **oil temperature sensor connector**.
If the connections are faulty and there is a repair procedure (see **Technical Note 6015A, Repairing electrical wiring, wiring: precautions for repairs**) repair the wiring, otherwise change the wiring.

Measure the oil temperature sensor resistance between connections **47Q** and **3CK** of the connector for component **343**.
Replace the sensor if the **resistance** is not: **3511 Ω ± 176 at + 20 °C**
980 Ω ± 50 at + 50 °C
469 Ω ± 24 at + 70 °C
242 Ω ± 12 at + 90 °C

Check for **insulation against earth, continuity and absence of interference resistance** for the following connections:
– connection code **47Q**,
– connection code **3CK**,
between oil temperature sensor, **component code 343** and the engine management computer, **component code 120**.
If the connections are faulty and there is a repair procedure (see **Technical Note 6015A, Repairing electrical wiring, wiring: precautions for repairs**) repair the wiring, otherwise change the wiring.

If the **fault is still present**, contact the Techline.

AFTER REPAIR	Deal with any faults detected by the **diagnostic tool**. Clear the computer memory. Carry out a road test followed by another check with the **diagnostic tool**.

GETtheMANUALS.org

DF058 **CONTINUED 1**	

CC.0	***NOTES***	**Conditions for applying the fault finding procedure to stored faults:** The fault is declared as present if: – the voltage on the diagnostic line is less than **0.12 V**, – **the level 1 warning light comes on.**

Manipulate the wiring harness between the engine management computer and the oil temperature sensor to detect a status change (present ↔ stored).
Look for chafing damage on the harness.
If the connections are faulty and there is a repair procedure (see **Technical Note 6015A, Repairing electrical wiring, wiring: precautions for repairs**) repair the wiring, otherwise change the wiring.

Check the connection and condition of the **computer connector**.
If the connections are faulty and there is a repair procedure (see **Technical Note 6015A, Repairing electrical wiring, wiring: precautions for repairs**) repair the wiring, otherwise change the wiring.

Check the connection and condition of the **oil temperature sensor connector**.
If the connections are faulty and there is a repair procedure (see **Technical Note 6015A, Repairing electrical wiring, wiring: precautions for repairs**) repair the wiring, otherwise change the wiring.

Measure the oil temperature sensor resistance between connections **47Q** and **3CK** of the connector for component **343**.
Replace the sensor if the **resistance** is not: **3511 Ω ± 176 at + 20 °C**
980 Ω ± 50 at + 50 °C
469 Ω ± 24 at + 70 °C
242 Ω ± 12 at + 90 °C

Check **insulation from + 5V and +12V, continuity and absence of interference resistance** on the following connections:
– connection code **47Q**,
– connection code **3CK**,
between oil temperature sensor, **component code 343** and the engine management computer, **component code 120**.
If the connections are faulty and there is a repair procedure (see **Technical Note 6015A, Repairing electrical wiring, wiring: precautions for repairs**) repair the wiring, otherwise change the wiring.

If the **fault is still present**, contact the Techline.

AFTER REPAIR	Deal with any faults detected by the **diagnostic tool**. Clear the computer memory. Carry out a road test followed by another check with the **diagnostic tool**.

GETtheMANUALS.org

DF059 PRESENT OR STORED	MISFIRING ON CYLINDER 1 1.DEF: Value outside permitted tolerance values

1.DEF	***NOTES***	**Conditions for applying the fault finding procedure to stored faults:** – battery voltage greater than **10 V**, – engine coolant temperature greater than **70 °C**.

Remove the high pressure pipe of injector 1. Look for any blockages of the high pressure pipe. Replace the high pressure pipe, if necessary.
Look for possible blockages of the union joining injector 1 to the injector rail. Clean if necessary.
Replace injector 1, if the high pressure pipe and the injector rail are clean when removed. Clear the stored faults. Start the vehicle again.
If **the fault is still present**, apply **test 10: Incorrect injector operation**. If **the fault is still present**, contact the Techline.

AFTER REPAIR	Deal with any faults detected by the **diagnostic tool**. Clear the computer memory. Carry out a road test followed by another check with the **diagnostic tool**.

GETtheMANUALS.org

DF060 PRESENT OR STORED	MISFIRING ON CYLINDER 2 1.DEF: Value outside permitted tolerance values

1.DEF	***NOTES***	**Conditions for applying the fault finding procedure to stored faults:** – battery voltage greater than **10 V**, – engine coolant temperature greater than **70 °C**.

Remove the high pressure pipe of injector 2. Look for any blockages of the high pressure pipe. Replace the high pressure pipe, if necessary.
Look for possible blockages of the union joining injector 2 to the injector rail. Clean if necessary.
Replace injector 2, if the high pressure pipe and the injector rail are clean when removed. Clear the stored faults. Start the vehicle again.
If **the fault is still present**, apply **test 10: Incorrect injector operation**. If **the fault is still present**, contact the Techline.

AFTER REPAIR	Deal with any faults detected by the **diagnostic tool**. Clear the computer memory. Carry out a road test followed by another check with the **diagnostic tool**.

GETtheMANUALS.org

DF061 PRESENT OR STORED	MISFIRING ON CYLINDER 3 1.DEF: Value outside permitted tolerance values

1.DEF	***NOTES***	**Conditions for applying the fault finding procedure to stored faults:** – battery voltage greater than **10 V**, – engine coolant temperature greater than **70 °C**.

Remove the high pressure pipe of injector 3. Look for any blockages of the high pressure pipe. Replace the high pressure pipe, if necessary.
Look for possible blockages of the union joining injector 3 to the injector rail. Clean if necessary.
Replace injector 3, if the high pressure pipe and the injector rail are clean when removed. Clear the stored faults. Start the vehicle again.
If **the fault is still present**, apply **test 10: Incorrect injector operation**. If **the fault is still present**, contact the Techline.

AFTER REPAIR	Deal with any faults detected by the **diagnostic tool**. Clear the computer memory. Carry out a road test followed by another check with the **diagnostic tool**.

GETtheMANUALS.org

DF062 PRESENT OR STORED	MISFIRING ON CYLINDER 4 1.DEF: Value outside permitted tolerance values

1.DEF	***NOTES***	**Conditions for applying the fault finding procedure to stored faults:** – battery voltage greater than **10 V**, – engine coolant temperature greater than **70 °C**.

Remove the high pressure pipe of injector 4. Look for any blockages of the high pressure pipe. Replace the high pressure pipe, if necessary.
Look for possible blockages of the union joining injector 4 to the injector rail. Clean if necessary.
Replace injector 4, if the high pressure pipe and the injector rail are clean when removed. Clear the stored faults. Start the vehicle again.
If **the fault is still present**, apply **test 10: Incorrect injector operation**. If **the fault is still present**, contact the Techline.

AFTER REPAIR	Deal with any faults detected by the **diagnostic tool**. Clear the computer memory. Carry out a road test followed by another check with the **diagnostic tool**.

GETtheMANUALS.org

DF063 PRESENT OR STORED	MISFIRING ON CYLINDER 5 1.DEF: Value outside permitted tolerance values

1.DEF	***NOTES***	**Conditions for applying the fault finding procedure to stored faults:** – battery voltage greater than **10 V**, – engine coolant temperature greater than **70 °C**.

Remove the high pressure pipe of injector 5. Look for any blockages of the high pressure pipe. Replace the high pressure pipe, if necessary.
Look for possible blockages of the union joining injector 5 to the injector rail. Clean if necessary.
Replace injector 5, if the high pressure pipe and the injector rail are clean when removed. Clear the stored faults. Start the vehicle again.
If **the fault is still present**, apply **test 10: Incorrect injector operation**. If **the fault is still present**, contact the Techline.

AFTER REPAIR	Deal with any faults detected by the **diagnostic tool**. Clear the computer memory. Carry out a road test followed by another check with the **diagnostic tool**.

GETtheMANUALS.org

DF064 PRESENT OR STORED	MISFIRING ON CYLINDER 6 1.DEF: Value outside permitted tolerance values

1.DEF	***NOTES***	**Conditions for applying the fault finding procedure to stored faults:** – battery voltage greater than **10 V**, – engine coolant temperature greater than **70 °C**.

Remove the high pressure pipe of injector 6. Look for any blockages of the high pressure pipe. Replace the high pressure pipe, if necessary.
Look for possible blockages of the union joining injector 6 to the injector rail. Clean if necessary.
Replace injector 6, if the high pressure pipe and the injector rail are clean when removed. Clear the stored faults. Start the vehicle again.
If **the fault is still present**, apply **test 10: Incorrect injector operation**. If **the fault is still present**, contact the Techline.

AFTER REPAIR	Deal with any faults detected by the **diagnostic tool**. Clear the computer memory. Carry out a road test followed by another check with the **diagnostic tool**.

GETtheMANUALS.org

DF089 PRESENT OR STORED	INLET MANIFOLD PRESSURE SENSOR CIRCUIT CO.0 : Open circuit or short circuit to earth CC.1 : Short circuit to + 12 V 1.DEF: Inconsistency 2.DEF: Variable geometry: turbocharger vanes jammed shut 3.DEF: Variable geometry: turbocharger vanes jammed open

NOTES	**Special notes:** Use bornier **Elé. 1681** for all operations on the engine management computer connectors. (see **Technical Note wiring diagram, Vel Satis phase 2**) (see **Technical Note wiring diagram, Espace IV phase 2**)

CO.0	***NOTES***	**Priority when dealing with a number of faults:** Deal with faults **DF569 Turbocharging circuit and DF956 Lack of air in the inlet circuit** first, if they are present or stored.
		Conditions for applying the fault finding procedure to stored faults: The fault is declared as present if: – the manifold pressure sensor voltage is less than **1.16 V**, – the battery voltage is greater than **11.6 V**, – under **+ after ignition feed**, – fast idling at **1000 rpm** and limitation of performance, – turbocharger inactive, – **level 1** and **OBD** warning lights are lit.

Manipulate the wiring harness between the engine management computer and the inlet pressure sensor to detect a status change (present ↔ stored).
Look for chafing damage on the harness.
If the connections are faulty and there is a repair procedure (see **Technical Note 6015A, Repairing electrical wiring, wiring: precautions for repairs**) repair the wiring, otherwise change the wiring.

Check the connection and condition of the **computer connector**.
Check the connection and condition **of the manifold pressure sensor connector**.
If the connections are faulty and there is a repair procedure (see **Technical Note 6015A, Repairing electrical wiring, wiring: precautions for repairs**) repair the wiring, otherwise change the wiring.

AFTER REPAIR	Deal with any faults detected by the **diagnostic tool**. Clear the computer memory. Carry out a road test followed by another check with the **diagnostic tool**.

GETtheMANUALS.org

DF089 **CONTINUED 1**	

Check for **insulation against earth, continuity and absence of interference resistance** on the following connections:
– connection code **3LP**,
– connection code **3AX**,
between the manifold pressure sensor, **component code 1474** and the engine management computer, **component code 120**.
The resistance is equal to or greater than 10 MΩ.
If the connections are faulty and there is a repair procedure (see **Technical Note 6015A, Repairing electrical wiring, wiring: precautions for repairs**) repair the wiring, otherwise change the wiring.

Clear the fault memory and start the engine.
If the fault is still present, replace the inlet manifold pressure sensor (see **MR 402 or MR 405 Mechanical, 12A**).

Clear the fault memory and restart the engine.
If the **fault is still present**, contact the Techline.

		Priority when dealing with a number of faults: Deal with faults **DF569 Turbocharging circuit and DF957 Too much air in the inlet circuit** first, if they are present or stored.
CC.1	***NOTES***	**Conditions for applying the fault finding procedure to stored faults:** The fault is declared as present if: – the manifold pressure sensor voltage is greater than **4.78 V**, – the battery voltage is greater than **11.6 V**, – under **+ after ignition feed**, – fast idling at **1000 rpm** and limitation of performance, – turbocharger inactive, – **level 1** and **OBD** warning lights are lit.

Manipulate the wiring harness between the engine management computer and the inlet pressure sensor to detect a status change (present ↔ stored).
Look for chafing damage on the harness.
If the connections are faulty and there is a repair procedure (see **Technical Note 6015A, Repairing electrical wiring, wiring: precautions for repairs**) repair the wiring, otherwise change the wiring.

AFTER REPAIR	Deal with any faults detected by the **diagnostic tool**. Clear the computer memory. Carry out a road test followed by another check with the **diagnostic tool**.

GETtheMANUALS.org

DF089 **CONTINUED 2**	

Check the connection and condition of the **computer connector**. If the connections are faulty and there is a repair procedure (see **Technical Note 6015A, Repairing electrical wiring, wiring: precautions for repairs**) repair the wiring, otherwise change the wiring.
Check the connection and condition **of the manifold pressure sensor connector**. If the connections are faulty and there is a repair procedure (see **Technical Note 6015A, Repairing electrical wiring, wiring: precautions for repairs**) repair the wiring, otherwise change the wiring.
Check **the continuity and absence of interference resistance** of the following connections: – connection code **3CJ**, – connection code **3AX**, – connection code **3LP**, between the manifold pressure sensor, **component code 1474** and the engine management computer, **component code 120**. If the connections are faulty and there is a repair procedure (see **Technical Note 6015A, Repairing electrical wiring, wiring: precautions for repairs**) repair the wiring, otherwise change the wiring.
Stop the engine and check for a voltage of less than **+ 5 V** on connection **3LP** of the inlet manifold pressure sensor with **+ after ignition feed**. Repair if necessary.
Clear the fault memory and restart the engine. If the fault is still present, replace the sensor. If the **fault is still present**, contact the Techline.

AFTER REPAIR	Deal with any faults detected by the **diagnostic tool**. Clear the computer memory. Carry out a road test followed by another check with the **diagnostic tool**.

GETtheMANUALS.org

DF089 **CONTINUED 3**	

1.DEF	***NOTES***	**Conditions for applying the fault finding procedure to stored faults:** The fault is declared present if: – the inlet manifold vacuum is less than **150 mbar** at atmospheric pressure, refer to parameter **PR035 Atmospheric pressure**, – engine speed is less than **1050 rpm**, – atmospheric pressure signal without faults, – the fuel flow is less than **15 mm^3/stroke**, – the vehicle is stopped, – **level 1** and **OBD** warning lights are lit.

Manipulate the wiring harness between the engine management computer and the inlet manifold pressure sensor to detect a status change (present ↔ stored).
Look for chafing damage on the harness.
If the connections are faulty and there is a repair procedure (see **Technical Note 6015A, Repairing electrical wiring, wiring: precautions for repairs**) repair the wiring, otherwise change the wiring.

Check the connection and condition of the **computer connector**.
If the connections are faulty and there is a repair procedure (see **Technical Note 6015A, Repairing electrical wiring, wiring: precautions for repairs**) repair the wiring, otherwise change the wiring.

Check the connection and condition **of the manifold pressure sensor connector**.
If the connections are faulty and there is a repair procedure (see **Technical Note 6015A, Repairing electrical wiring, wiring: precautions for repairs**) repair the wiring, otherwise change the wiring.

Check **the continuity and absence of interference resistance** of the following connections:
– connection code **3CJ**,
– connection code **3AX**,
– connection code **3LP**,
between the manifold pressure sensor, **component code 1474** and the engine management computer, **component code 120**.
If the connections are faulty and there is a repair procedure (see **Technical Note 6015A, Repairing electrical wiring, wiring: precautions for repairs**) repair the wiring, otherwise change the wiring.

Clear the fault memory and start the engine.
If the fault is still present, check the air supply circuit between the turbocharger and the inlet manifold.
Verify the conformity check, **with engine running,** of **PR041 Turbocharging pressure** and **PR132 Inlet air flow**.
If the fault is still present, replace the inlet manifold pressure sensor.

Clear the fault memory and restart the engine.
Apply **test 4: Turbocharging and air inlet circuit check**.
If the **fault is still present**, contact the Techline.

AFTER REPAIR	Deal with any faults detected by the **diagnostic tool**. Clear the computer memory. Carry out a road test followed by another check with the **diagnostic tool**.

GETtheMANUALS.org

DF089 **CONTINUED 4**	

2.DEF ***3.DEF***	***NOTES***	**Conditions for applying the fault finding procedure to stored faults:** – the **level 1** warning light comes on.

Manipulate the wiring harness between the engine management computer and the turbocharger controller to detect a status change (present ↔ stored). Look for chafing damage on the harness. If the connections are faulty and there is a repair procedure (see **Technical Note 6015A, Repairing electrical wiring, wiring: precautions for repairs**) repair the wiring, otherwise change the wiring.
Check the connection and condition of the **computer connector**. If the connections are faulty and there is a repair procedure (see **Technical Note 6015A, Repairing electrical wiring, wiring: precautions for repairs**) repair the wiring, otherwise change the wiring.
Check the condition and status **of the turbocharger controller connector**. If the connections are faulty and there is a repair procedure (see **Technical Note 6015A, Repairing electrical wiring, wiring: precautions for repairs**) repair the wiring, otherwise change the wiring.
Look for any possible jamming of the turbocharger variable geometry command. Apply **test 7: Variable geometry turbocharger command**. Replace the turbocharger, if necessary.
Clear the fault memory and start the engine.
If the **fault is still present**, contact the Techline.

AFTER REPAIR	Deal with any faults detected by the **diagnostic tool**. Clear the computer memory. Carry out a road test followed by another check with the **diagnostic tool**.

GETtheMANUALS.org

DF097 PRESENT OR STORED	CAMSHAFT SENSOR CIRCUIT 1.DEF: Inconsistency 2.DEF: No signal

1.DEF	***NOTES***	**Special notes:** Use bornier **Elé. 1681** for all operations on the engine management computer connectors. (see **Technical Note wiring diagram, Vel Satis phase 2**) (see **Technical Note wiring diagram, Espace IV phase 2**)
		Conditions for applying the fault finding procedure to stored faults: The fault is declared as present if: – the computer receives an incorrect signal from the engine speed sensor or an incorrect signal from the camshaft sensor, – engine speed is greater than **600 rpm**, – the **level 1** warning light comes on.

Check the condition of the battery and the charging circuit (see **Technical Note 6014A, Checking the charging circuit**).
Check the condition of the vehicle earths.
Replace the battery if its voltage is less than **10 V**.

Manipulate the wiring harness between the engine management computer and the camshaft sensor to detect a status change (present ↔ stored).
Look for chafing damage on the harness.
If the connections are faulty and there is a repair procedure (see **Technical Note 6015A, Repairing electrical wiring, wiring: precautions for repairs**) repair the wiring, otherwise change the wiring.

Check the connection and condition of the **computer connector**.
If the connections are faulty and there is a repair procedure (see **Technical Note 6015A, Repairing electrical wiring, wiring: precautions for repairs**) repair the wiring, otherwise change the wiring.

Check the connection and status of the **camshaft sensor connector**.
If the connections are faulty and there is a repair procedure (see **Technical Note 6015A, Repairing electrical wiring, wiring: precautions for repairs**) repair the wiring, otherwise change the wiring.

Check that the **earth connection** of the camshaft position sensor electric wiring harness **shielding** is in **good condition**.
If the connections are faulty and there is a repair procedure (see **Technical Note 6015A, Repairing electrical wiring, wiring: precautions for repairs**) repair the wiring, otherwise change the wiring.

If the fault is still present, replace the camshaft sensor.

Clear the fault memory and start the engine.
If the **fault is still present**, contact the Techline.

AFTER REPAIR	Deal with any faults detected by the **diagnostic tool**. Clear the computer memory. Carry out a road test followed by another check with the **diagnostic tool**.

GETtheMANUALS.org

DF097 **CONTINUED 1**	

2.DEF	***NOTES***	**Conditions for applying the fault finding procedure to stored faults:** The fault is declared as present if: – camshaft sensor signal not detected, – engine speed signal detected, – defective harness or connections, – defective sensor, – the **level 1** warning light comes on.

Check the condition of the battery and the charging circuit (see **Technical Note 6014A, Checking the charging circuit**). Check the condition of the vehicle earths. Replace the battery if its voltage is less than **10 V**.
Manipulate the wiring harness between the engine management computer and the camshaft sensor to detect a status change (present ↔ stored). Look for possible damage to the harness, and check **the connection and the condition** of the camshaft sensor and its connections. If the connections are faulty and there is a repair procedure (see **Technical Note 6015A, Repairing electrical wiring, wiring: precautions for repairs**) repair the wiring, otherwise change the wiring.
Check the connection and condition of the **computer connector**. If the connections are faulty and there is a repair procedure (see **Technical Note 6015A, Repairing electrical wiring, wiring: precautions for repairs**) repair the wiring, otherwise change the wiring.
Check the connection and status of the **camshaft sensor connector**. If the connections are faulty and there is a repair procedure (see **Technical Note 6015A, Repairing electrical wiring, wiring: precautions for repairs**) repair the wiring, otherwise change the wiring.
Check that the **earth connection** of the camshaft position sensor electric wiring harness **shielding** is in **good condition**. If the connections are faulty and there is a repair procedure (see **Technical Note 6015A, Repairing electrical wiring, wiring: precautions for repairs**) repair the wiring, otherwise change the wiring.
Check for **insulation against earth, continuity and absence of interference resistance** on the following connections: – connection code **3SV**, – connection code **3QL**, – connection code **3QK**, between the camshaft sensor, **component code 746** and the engine management computer, **component code 120**. If the connections are faulty and there is a repair procedure (see **Technical Note 6015A, Repairing electrical wiring, wiring: precautions for repairs**) repair the wiring, otherwise change the wiring.
Clear the fault memory and start the engine. If the **fault is still present**, contact the Techline.

AFTER REPAIR	Deal with any faults detected by the **diagnostic tool**. Clear the computer memory. Carry out a road test followed by another check with the **diagnostic tool**.

GETtheMANUALS.org

DF098 PRESENT OR STORED	FUEL TEMPERATURE SENSOR CIRCUIT CC.0 : Short circuit to earth CO.1 : Open circuit or short circuit to + 12 V

NOTES	**Special notes:** Use bornier **Elé. 1681** for all operations on the engine management computer connectors. (see **Technical Note wiring diagram, Vel Satis phase 2**) (see **Technical Note wiring diagram, Espace IV phase 2**)

CO.1	***NOTES***	**Priority when dealing with a number of faults:** Deal with **DF012 Sensor supply voltage No. 2** first if it is present or stored.
		Conditions for applying the fault finding procedure to stored faults: The fault is declared as present if: – the fuel temperature sensor voltage is greater than **4.97 V**, – presence of **+ after ignition feed**, – **level 1** and **OBD** warning lights are lit.

Manipulate the wiring harness between the engine management computer and the fuel temperature sensor to detect a status change (present ↔ stored).
Look for chafing damage on the harness.
If the connections are faulty and there is a repair procedure (see **Technical Note 6015A, Repairing electrical wiring, wiring: precautions for repairs**) repair the wiring, otherwise change the wiring.

Check the connection and condition of the **computer connector**.
Check the connection and condition **of the fuel temperature sensor connector**.
If the connections are faulty and there is a repair procedure (see **Technical Note 6015A, Repairing electrical wiring, wiring: precautions for repairs**) repair the wiring, otherwise change the wiring.

Measure the fuel temperature sensor resistance between the connections **3LD** and **3CK** of the connector for component **1066**.
Replace the sensor if the **resistance** is not: **5658 Ω ± 280 at + 10 °C**
3511 Ω ± 176 at + 20 °C
980 Ω ± 50 at + 50 °C

AFTER REPAIR	Deal with any faults detected by the **diagnostic tool**. Clear the computer memory. Carry out a road test followed by another check with the **diagnostic tool**.

GETtheMANUALS.org

DF098 **CONTINUED 1**	

Check for **insulation against earth, continuity and absence of interference resistance** for the following connections:
– connection code **3LD**,
– connection code **3CK**,
between the fuel temperature sensor, **component code 1066** and the engine management computer, **component code 120**.
The resistance is equal to or greater than 10 MΩ.
If the connections are faulty and there is a repair procedure (see **Technical Note 6015A, Repairing electrical wiring, wiring: precautions for repairs**) repair the wiring, otherwise change the wiring.

If the fault is still present, deal with any other faults.

If the **fault is still present**, contact the Techline.

CC.0	***NOTES***	**Priority when dealing with a number of faults:** Deal with **DF012 Sensor supply voltage No. 2** first if it is present or stored.
		Conditions for applying the fault finding procedure to stored faults: The fault is declared as present if: – the fuel temperature sensor voltage is less than **0.12 V**, – presence of **+ after ignition feed**, – **level 1** and **OBD** warning lights are lit.

Manipulate the wiring harness between the engine management computer and the fuel temperature sensor to detect a status change (present ↔ stored).
Look for chafing damage on the harness.
If the connections are faulty and there is a repair procedure (see **Technical Note 6015A, Repairing electrical wiring, wiring: precautions for repairs**) repair the wiring, otherwise change the wiring.

Check the connection and condition **of the computer connector**.
If the connections are faulty and there is a repair procedure (see **Technical Note 6015A, Repairing electrical wiring, wiring: precautions for repairs**) repair the wiring, otherwise change the wiring.

Check the connection and condition **of the fuel temperature sensor connector**.
If the connections are faulty and there is a repair procedure (see **Technical Note 6015A, Repairing electrical wiring, wiring: precautions for repairs**) repair the wiring, otherwise change the wiring.

AFTER REPAIR	Deal with any faults detected by the **diagnostic tool**. Clear the computer memory. Carry out a road test followed by another check with the **diagnostic tool**.

GETtheMANUALS.org

DF098 **CONTINUED 2**	

Measure the fuel temperature sensor resistance between the connections **3LD** and **3CK** of the connector for component **1066**. Replace the sensor if the **resistance** is not: **5658 Ω ± 280 at + 10 °C** **3511 Ω ± 176 at + 20 °C** **980 Ω ± 50 at + 50 °C**
Check **the continuity, absence of interference resistance and insulation from + 5 V and + 12 V** of the following connection: – connection code **3CK**, between the fuel temperature sensor, **component code 1066** and the engine management computer, **component code 120**. If the connections are faulty and there is a repair procedure (see **Technical Note 6015A, Repairing electrical wiring, wiring: precautions for repairs**) repair the wiring, otherwise change the wiring.
Check the **insulation from earth, the continuity and absence of interference resistance** on the following connection: – connection code **3LD**, between the fuel temperature sensor, **component code 1066** and the engine management computer, **component code 120**. If the connections are faulty and there is a repair procedure (see **Technical Note 6015A, Repairing electrical wiring, wiring: precautions for repairs**) repair the wiring, otherwise change the wiring.
If the fault is still present, deal with any other faults.
If the **fault is still present**, contact the Techline.

AFTER REPAIR	Deal with any faults detected by the **diagnostic tool**. Clear the computer memory. Carry out a road test followed by another check with the **diagnostic tool**.

GETtheMANUALS.org

DF114 PRESENT OR STORED	PREHEATING RELAY CONTROL CIRCUIT GROUP 1 CO.1 : Open circuit or short circuit to + 12 V CC.0 : Short circuit to earth

CO.1	***NOTES***	**Conditions for applying the fault finding procedure to stored faults:** The fault is declared as present if: – at least one of the plugs is faulty, – the preheating unit is faulty, – defective harness or connections.
		Special notes: – run the **AC037 Preheating relay** command to check whether the relay is working, – use bornier **Elé. 1681** for all operations on the engine management computer connectors. (see **Technical Note wiring diagram, Vel Satis phase 2**) (see **Technical Note wiring diagram, Espace IV phase 2**)

Check the **condition** and the **resistance** of the back row heater plugs (cylinders 1, 3 and 5).
Replace the heater plugs if the **resistance** is greater than **30** Ω.

Check the condition of the **FM18 and FM19 (70 A)** fuses for the back row heater plug control unit.
Replace the fuse(s), if necessary.

Check for **insulation against earth, continuity and absence of interference resistance** on the following connections:
– connection code **3SP**,
between the heater plug of **cylinder no. 1, component code 680** and the heater plug control unit, **component code 257**.
– connection code **3SR**,
between the heater plug of **cylinder no. 3, component code 682** and the heater plug control unit, **component code 257**.
– connection code **3ST**,
between the heater plug of **cylinder no. 5, component code 1260** and the heater plug control unit, **component code 257**.
If the connections are faulty and there is a repair procedure (see **Technical Note 6015A, Repairing electrical wiring, wiring: precautions for repairs**) repair the wiring, otherwise change the wiring.

Check the **+ 12 V** feed on connection **BP35** of the back row pre-postheating unit.

AFTER REPAIR	Deal with any faults detected by the **diagnostic tool**. Clear the computer memory. Carry out a road test followed by another check with the **diagnostic tool**.

GETtheMANUALS.org

DF144 **CONTINUED 1**	

Check for **continuity and the absence of interference resistance** on the following connection: – connection code **BP35**, between the battery, **component code 107** and the back row heater plug control unit, **component code 257**. If the connections are faulty and there is a repair procedure (see **Technical Note 6015A, Repairing electrical wiring, wiring: precautions for repairs**) repair the wiring, otherwise change the wiring.
Otherwise, replace the connector.
Check **the continuity and absence of interference resistance** of the following connections: – connection code **3FF**, – connection code **3HM**, between the engine management computer, **component code 120** and the back row heater plug control unit, **component code 257**. If the connections are faulty and there is a repair procedure (see **Technical Note 6015A, Repairing electrical wiring, wiring: precautions for repairs**) repair the wiring, otherwise change the wiring.
Replace the pre-postheating unit, if necessary. Clear the fault memory and start the engine. If the **fault is still present**, contact the Techline.

AFTER REPAIR	Deal with any faults detected by the **diagnostic tool**. Clear the computer memory. Carry out a road test followed by another check with the **diagnostic tool**.

GETtheMANUALS.org

DF144 **CONTINUED 2**	

CC.0	***NOTES***	**Conditions for applying the fault finding procedure to stored faults:** The fault is declared as present if: – one of the plugs is faulty, – the preheating unit is faulty, – defective harness or connections.
		Special notes: – run the **AC037 Preheating relay** command to check whether the relay is working, – use bornier **Elé. 1681** for all operations on the engine management computer connectors.

Check for **insulation against earth, continuity and absence of interference resistance** on the following connections:
– connection code **3FF**,
– connection code **3HM**,
between the engine management computer, **component code 120** and the back row heater plug control unit, **component code 257**.
The resistance is equal to or greater than 10 MΩ.
If the connections are faulty and there is a repair procedure (see **Technical Note 6015A, Repairing electrical wiring, wiring: precautions for repairs**) repair the wiring, otherwise change the wiring.

Replace the pre-postheating unit, if necessary.
Clear the fault memory and start the engine.
If the **fault is still present**, contact the Techline.

AFTER REPAIR	Deal with any faults detected by the **diagnostic tool**. Clear the computer memory. Carry out a road test followed by another check with the **diagnostic tool**.

GETtheMANUALS.org

DF151 **STORED**	MAIN RELAY CIRCUIT 1.DEF: Permanent low level 2.DEF: Permanent high signal

1.DEF	***NOTES***	**Conditions for applying the fault finding procedure to stored faults:** The fault is declared as present if: – defective harness or connections, – the main relay is faulty. **Special note:** – use bornier **Elé. 1681** for all operations on the engine management computer connectors. (see **Technical Note wiring diagram, Vel Satis phase 2**) (see **Technical Note wiring diagram, Espace IV phase 2**)

Check the connection and condition of the **computer** connector.
If the connections are faulty and there is a repair procedure (see **Technical Note 6015A, Repairing electrical wiring, wiring: precautions for repairs**) repair the wiring, otherwise change the wiring.

Check the connection and condition of the **main relay** connector.
If the connections are faulty and there is a repair procedure (see **Technical Note 6015A, Repairing electrical wiring, wiring: precautions for repairs**) repair the wiring, otherwise change the wiring.

Remove the main relay.

Check for **insulation against earth, continuity and absence of interference resistance** on the following connections:
– the two connection codes **3FB**,
– connection code **3AA**,
between the main relay, **component code 238** and the engine management computer, **component code 120**.
The resistance is equal to or greater than 10 MΩ.
If the connections are faulty and there is a repair procedure (see **Technical Note 6015A, Repairing electrical wiring, wiring: precautions for repairs**) repair the wiring, otherwise change the wiring.
Check the **+ 12 V** feed on connection code **BP*** of the main relay, **component code 238**.
If the connections are faulty and there is a repair procedure (see **Technical Note 6015A, Repairing electrical wiring, wiring: precautions for repairs**) repair the wiring, otherwise change the wiring.

Replace the **main relay**, if the continuities and supply are correct.
Clear the fault memory and start the engine.
If the **fault is still present**, contact the Techline.

AFTER REPAIR	Deal with any faults detected by the **diagnostic tool**. Clear the computer memory. Carry out a road test followed by another check with the **diagnostic tool**.

GETtheMANUALS.org

DF151 **CONTINUED 1**	

2.DEF	***NOTES***	**Conditions for applying the fault finding procedure to stored faults:** The fault is declared as present if: – defective harness or connections, – the main relay is faulty, – the engine is switched off. **Special note:** – use bornier **Elé. 1681** for all operations on the engine management computer connectors.

Check the condition of the engine management computer supply voltage fuse **FM3 (30A)**. If the connections are faulty and there is a repair procedure (see **Technical Note 6015A, Repairing electrical wiring, wiring: precautions for repairs**) repair the wiring, otherwise change the wiring.
Manipulate the wiring harness between the engine management computer and the main relay (injection locking relay) to detect a status change (present ↔ stored). Look for chafing damage on the harness. If the connections are faulty and there is a repair procedure (see **Technical Note 6015A, Repairing electrical wiring, wiring: precautions for repairs**) repair the wiring, otherwise change the wiring.
Check the connection and condition of the **computer connector**. If the connections are faulty and there is a repair procedure (see **Technical Note 6015A, Repairing electrical wiring, wiring: precautions for repairs**) repair the wiring, otherwise change the wiring.
Check the condition and status **of the main relay**. If the connections are faulty and there is a repair procedure (see **Technical Note 6015A, Repairing electrical wiring, wiring: precautions for repairs**) repair the wiring, otherwise change the wiring.
Check for **insulation against earth, continuity and absence of interference resistance** on the following connections: – the two connection codes **3FB**, – connection code **3AA**, between the main relay, **component code 238** and the engine management computer, **component code 120**. The resistance is equal to or greater than 10 MΩ. If the connections are faulty and there is a repair procedure (see **Technical Note 6015A, Repairing electrical wiring, wiring: precautions for repairs**) repair the wiring, otherwise change the wiring.

AFTER REPAIR	Deal with any faults detected by the **diagnostic tool**. Clear the computer memory. Carry out a road test followed by another check with the **diagnostic tool**.

GETtheMANUALS.org

DF151 **CONTINUED**	

Check the electrical circuit between the positive battery terminal and the main relay. If the connections are faulty and there is a repair procedure (see **Technical Note 6015A, Repairing electrical wiring, wiring: precautions for repairs**) repair the wiring, otherwise change the wiring.
Change over the main relay with another similar relay. If the fault disappears, replace the relay.
If the **fault is still present**, contact the Techline.

AFTER REPAIR	Deal with any faults detected by the **diagnostic tool**. Clear the computer memory. Carry out a road test followed by another check with the **diagnostic tool**.

GETtheMANUALS.org

DF158 PRESENT OR STORED	PREHEATING RELAY CONTROL CIRCUIT GROUP 2 CO.1 : Open circuit or short circuit to + 12 V CC.0 : Short circuit to earth

CO.1	***NOTES***	**Conditions for applying the fault finding procedure to stored faults:** The fault is declared as present if: – at least one of the plugs is faulty, – the preheating unit is faulty, – defective harness or connections.
		Special notes: – run the **AC037 Preheating relay** command to check whether the relay is working, – use bornier **Elé. 1681** for all operations on the engine management computer connectors. (see **Technical Note wiring diagram, Vel Satis phase 2**) (see **Technical Note wiring diagram, Espace IV phase 2**)

Check the **condition** and **resistance** of the front row heater plugs (cylinders 2, 4 and 6).
Replace the heater plugs if the **resistance** is greater than 30 Ω.

Check the condition of the fuses **FM18** and **FM19 (70 A)** for the front row heater plug control unit circuit.
If the connections are faulty and there is a repair procedure (see **Technical Note 6015A, Repairing electrical wiring, wiring: precautions for repairs**) repair the wiring, otherwise change the wiring.

Check for **insulation against earth, continuity and absence of interference resistance** on the following connections:
– connection code **3SQ**,
between the heater plug of **cylinder no. 2, component code 681** and the heater plug control unit, **component code 257**.
– connection code **3SS**,
between the heater plug of **cylinder no. 4, component code 683** and the heater plug control unit, **component code 257**.
– connection code **3SU**,
between the heater plug of **cylinder no. 6, component code 1261** and the heater plug control unit, **component code 257**.
If the connections are faulty and there is a repair procedure (see **Technical Note 6015A, Repairing electrical wiring, wiring: precautions for repairs**) repair the wiring, otherwise change the wiring.

Check the **+ 12 V** feed on connection **BP35** of the front row pre-postheating unit.
If the connections are faulty and there is a repair procedure (see **Technical Note 6015A, Repairing electrical wiring, wiring: precautions for repairs**) repair the wiring, otherwise change the wiring.

AFTER REPAIR	Deal with any faults detected by the **diagnostic tool**. Clear the computer memory. Carry out a road test followed by another check with the **diagnostic tool**.

GETtheMANUALS.org

DF158 CONTINUED 1	

Check the **continuity and the absence of interference resistance** on the following connection:
– connection code **BP35**,
between the battery, **component code 107** and the control unit of the heater plugs on the front row, **component code 257**.
If the connections are faulty and there is a repair method (see **Technical Note 6015A, Repairing electrical wiring, Wiring: Precautions for repairs**) repair the wiring, otherwise replace the wiring.

If the fault is still present, replace the connector.

Check the **continuity and absence of interference resistance** of the following connections:
– connection code **3FF**,
– connection code **3HL**,
between the engine management computer, **component code 120** and the heater plug control unit, **component code 257**.
If the connections are faulty and there is a repair method (see **Technical Note 6015A, Repairing electrical wiring, Wiring: Precautions for repairs**) repair the wiring, otherwise replace the wiring.

Replace the pre-postheating unit, if necessary.
Clear the fault memory and start the engine.
If the **fault is still present**, contact the Techline.

AFTER REPAIR	Deal with any faults displayed by the **diagnostic tool**. Clear the computer memory. Carry out a road test followed by another check with the **diagnostic tool**.

GETtheMANUALS.org

DF158 CONTINUED 2	

CC.0	***NOTES***	**Conditions for applying the fault finding procedure to stored faults:** The fault is considered present if: – one of the plugs is faulty, – the preheating unit is faulty, – defective harness or connections.
		Special note: – run command **AC037 Preheating relay** to check whether the relay is working, – use bornier **Elé. 1681** for all operations on the engine management computer connectors.

Check the **insulation against earth, continuity and the absence of interference resistance** on the following connections:
– connection code **3FF**,
– connection code **3HL**,
between the engine management computer, **component code 120** and the heater plug control unit, **component code 257**.
The resistance is equal to or greater than 10 MΩ.
If the connections are faulty and there is a repair method (see **Technical Note 6015A, Repairing electrical wiring, Wiring: Precautions for repairs**) repair the wiring, otherwise replace the wiring.

Replace the pre-postheating unit, if necessary.
Clear the fault memory and start the engine.
If the **fault is still present**, contact the Techline.

AFTER REPAIR	Deal with any faults displayed by the **diagnostic tool**. Clear the computer memory. Carry out a road test followed by another check with the **diagnostic tool**.

GETtheMANUALS.org

DF195 PRESENT OR STORED	ENGINE SPEED/CAMSHAFT SENSOR CONSISTENCY 1.DEF: Inconsistency

1.DEF	***NOTES***	**Conditions for applying the fault finding procedure to stored faults:** The fault is considered present if: – with the engine running, – the harness or connections are faulty, – there is an incorrectly positioned sensor, – the **level 2** warning light is lit.

Check that the battery **voltage** is greater than **10 V**. Replace the battery if necessary.
Manipulate the wiring harness between the engine management computer, the engine speed sensor and the camshaft sensor to detect a change of status (present ↔ stored). Look for possible damage to the wiring harness. If the connections are faulty and there is a repair method (see **Technical Note 6015A, Repairing electrical wiring, Wiring: Precautions for repairs**) repair the wiring, otherwise replace the wiring.
Check the connection and condition **of the computer connector**. If the connections are faulty and there is a repair method (see **Technical Note 6015A, Repairing electrical wiring, Wiring: Precautions for repairs**) repair the wiring, otherwise replace the wiring.
Check the connection and condition of the **camshaft sensor and engine speed sensor connector**. If the connections are faulty and there is a repair method (see **Technical Note 6015A, Repairing electrical wiring, Wiring: Precautions for repairs**) repair the wiring, otherwise replace the wiring.
Check the camshaft sensor output signal value.
Check the engine speed sensor output signal value.
Check the engine speed sensor target conformity (damaged or worn teeth and target fitted). Check the conformity of the target on the camshaft.
Replace the sensors if necessary.
Clear the faults from memory and then start the engine.
Perform another fault finding procedure on the computer. If the **fault is still present**, contact the Techline.

AFTER REPAIR	Deal with any faults displayed by the **diagnostic tool**. Clear the computer memory. Carry out a road test followed by another check with the **diagnostic tool**.

GETtheMANUALS.org

DF209 PRESENT OR STORED	EGR VALVE POSITION SENSOR CIRCUIT CO.0: Open circuit or short circuit to earth CC.1: Short circuit to + 12 V 1.DEF: Inconsistent position

NOTES	**Special notes:** Use bornier **Elé. 1681** for all operations on the engine management computer connectors. (see **Wiring Diagram Technical Note, Vel Satis phase 2**) (see **Wiring Diagram Technical Note, Espace IV phase 2**)

CO.0	***NOTES***	**Conditions for applying the fault finding procedure to stored faults:** The fault is considered present if: – the signal voltage of the exhaust gas recirculation position is above **0.32 V**, – fast idle speed at **1000 rpm**, – the **level 1** and **OBD** warning lights are lit, – EGR command inactive.

Manipulate the wiring harness between the engine management computer and the EGR valve position sensor to detect a change in status (present ↔ stored).
Look for chafing damage on the harness.
If the connections are faulty and there is a repair method (see **Technical Note 6015A, Repairing electrical wiring, Wiring: Precautions for repairs**) repair the wiring, otherwise replace the wiring.

Check the connection and condition **of the computer connector**.
If the connections are faulty and there is a repair method (see **Technical Note 6015A, Repairing electrical wiring, Wiring: Precautions for repairs**) repair the wiring, otherwise replace the wiring.

Check the connection and condition **of the EGR valve position sensor connector**.
If the connections are faulty and there is a repair method (see **Technical Note 6015A, Repairing electrical wiring, Wiring: Precautions for repairs**) repair the wiring, otherwise replace the wiring.

Check the **insulation against earth, continuity and the absence of interference resistance** on the following connections:
– connection code **3AX**,
– connection code **3EL**,
between the engine management computer, **component code 120** and the EGR valve position sensor, **component code 169**.
If the connections are faulty and there is a repair method (see **Technical Note 6015A, Repairing electrical wiring, Wiring: Precautions for repairs**) repair the wiring, otherwise replace the wiring.

If the fault is still present, replace the exhaust gas recirculation valve (see **MR 402 or MR 405, Mechanical, 12A**).
If the **fault is still present**, contact the Techline.

AFTER REPAIR	Deal with any faults displayed by the **diagnostic tool**. Clear the computer memory. Carry out a road test followed by another check with the **diagnostic tool**.

GETtheMANUALS.org

DF209 CONTINUED 1	

CC.1	***NOTES***	**Conditions for applying the fault finding procedure to stored faults:** The fault is considered present if: – the signal voltage of the exhaust gas recirculation position is above **4.66 V**, – fast idle speed at **1000 rpm**, – the **level 1** and **OBD** warning lights are lit, – EGR command inactive.

Manipulate the wiring harness between the engine management computer and the **EGR valve position sensor** to detect a change in status (present ↔ stored). Look for possible damage to the wiring harness. If the connections are faulty and there is a repair method (see **Technical Note 6015A, Repairing electrical wiring, Wiring: Precautions for repairs**) repair the wiring, otherwise replace the wiring.
Check the connection and condition **of the computer connector**. If the connections are faulty and there is a repair method (see **Technical Note 6015A, Repairing electrical wiring, Wiring: Precautions for repairs**) repair the wiring, otherwise replace the wiring.
Check the connection and condition **of the EGR valve position sensor**. If the connections are faulty and there is a repair method (see **Technical Note 6015A, Repairing electrical wiring, Wiring: Precautions for repairs**) repair the wiring, otherwise replace the wiring.
Check the **insulation from + 12 V, the continuity and the absence of interference resistance** of the following connection: – connection code **3CJ**, between the engine management computer, **component code 120** and the EGR valve position sensor, **component code 169**. If the connections are faulty and there is a repair method (see **Technical Note 6015A, Repairing electrical wiring, Wiring: Precautions for repairs**) repair the wiring, otherwise replace the wiring.
Check the voltage between the **connections**: – connection code **3CJ**, – connection code **3EL**, of the injection computer, **component code 120**. If the **voltage** is not **less than 1 V**, repair or replace the wiring harness.
If the fault is still present, replace the exhaust gas recirculation valve (see **MR 402 or MR 405, Mechanical, 12A**). If the **fault is still present**, contact the Techline.

AFTER REPAIR	Deal with any faults displayed by the **diagnostic tool**. Clear the computer memory. Carry out a road test followed by another check with the **diagnostic tool**.

GETtheMANUALS.org

DF209 CONTINUED 2	

1.DEF	***NOTES***	**Priority when dealing with a number of faults:** Deal with the other faults first if they are present or stored.
		Conditions for applying the fault finding procedure to stored faults: The fault is considered present if: – fast idle speed at **1000 rpm**, – limitation of performance 30% accelerator pedal, – limitation of the quantity of fuel injected, – turbocharger command inactive, – EGR command inactive, – **level 1** and **OBD** warning lights are lit,

Replace the exhaust gas recirculation valve.
Clear the fault memory and start the engine. If the **fault is still present**, contact the Techline.

AFTER REPAIR	Deal with any faults displayed by the **diagnostic tool**. Clear the computer memory. Carry out a road test followed by another check with the **diagnostic tool**.

GETtheMANUALS.org

DF226 PRESENT OR STORED	DAMPER VALVE CIRCUIT CC.1: Short circuit to + 12 V CO.0: Open circuit or short circuit to earth

NOTES	**Special notes:** Use bornier **Elé. 1681** for all operations on the engine management computer connectors. (see **Wiring Diagram Technical Note, Vel Satis phase 2**) (see **Wiring Diagram Technical Note, Espace IV phase 2**)

CC.1	***NOTES***	**Conditions for applying the fault finding procedure to stored faults:** The fault is considered present if: – the damper valve solenoid valve is active.

Manipulate the wiring harness between the engine management computer and the damper valve solenoid valve connector to detect a change in status (present ↔ stored).
Look for any possible damage to the wiring harness, check **the connection and condition** of the damper valve solenoid valve and its connections, and the injection computer and its connections.
If the connections are faulty and there is a repair method (see **Technical Note 6015A, Repairing electrical wiring, Wiring: Precautions for repairs**) repair the wiring, otherwise replace the wiring.

Disconnect connector **B** from the engine management computer and the damper valve solenoid valve connector.

Check **the insulation from earth, the continuity and the absence of interference resistance** on the following connection:
– connection code **3VN**,
between the damper valve solenoid valve, **component code 819** and the engine management computer, **component code 120**.
The resistance is equal to or greater than 10 MΩ.
If the connections are faulty and there is a repair method (see **Technical Note 6015A, Repairing electrical wiring, Wiring: Precautions for repairs**) repair the wiring, otherwise replace the wiring.

If the **fault is still present**, contact the Techline.

AFTER REPAIR	Deal with any faults displayed by the **diagnostic tool**. Clear the computer memory. Carry out a road test followed by another check with the **diagnostic tool**.

GETtheMANUALS.org

DF226 CONTINUED 1	

CO.0	***NOTES***	**Conditions for applying the fault finding procedure to stored faults:** The fault is considered present if: – the damper valve solenoid valve is active.

Check fuse **FM3 (30 A)**. If the connections are faulty and there is a repair method (see **Technical Note 6015A, Repairing electrical wiring, Wiring: Precautions for repairs**) repair the wiring, otherwise replace the wiring.
Disconnect connector **B** from the engine management computer and the damper valve solenoid valve connector.
Measure the resistance of the damper valve solenoid valve between connections **3VN** and **3FB** of the connector for component **819**. Replace the damper valve solenoid valve if the **resistance** is not **40 Ω ± 4 at + 20˚C**.
Measure the resistance between **connection 3FB** of the damper valve solenoid valve and the damper valve solenoid valve casing. The resistance must be above **1 MΩ**. Replace the damper valve solenoid valve, if necessary.
Check **the insulation from earth, the continuity and the absence of interference resistance** on the following connection: – connection code **3VN**, between the damper valve solenoid valve, **component code 819** and the engine management computer, **component code 120**. If the connections are faulty and there is a repair method (see **Technical Note 6015A, Repairing electrical wiring, Wiring: Precautions for repairs**) repair the wiring, otherwise replace the wiring.
Check the **continuity** between **connection 3FB** of the damper valve solenoid valve and fuse **FM3**. If the connections are faulty and there is a repair method (see **Technical Note 6015A, Repairing electrical wiring, Wiring: Precautions for repairs**) repair the wiring, otherwise replace the wiring.
If the **fault is still present**, contact the Techline.

AFTER REPAIR	Deal with any faults displayed by the **diagnostic tool**. Clear the computer memory. Carry out a road test followed by another check with the **diagnostic tool**.

GETtheMANUALS.org

DF272 PRESENT OR STORED	EGR VALVE CONTROL CIRCUIT CO: Open circuit 1.DEF: Valve jammed CC: Short circuit

NOTES	**Special notes:** Use bornier **Elé. 1681** for all operations on the engine management computer connectors.

CO	***NOTES***	**Conditions for applying the fault finding procedure to stored faults:** The fault is considered present if: – under **+ APC**, – battery voltage is greater than **11 V**, – the **level 1** warning light is lit.

Disconnect connector **B** from the engine management computer and the EGR valve connector.
Measure the resistance of the exhaust gas recirculation valve between connections **3VP** and **3VQ** of the connector for component **169**. Replace the exhaust gas recirculation valve, if the resistance is not **2.45 Ω ± 0.75**.
Check the **continuity and absence of interference resistance** of the following connections: – connection code **3VP**, – connection code **3VQ**, between the exhaust gas recirculation valve, **component code 169** and the engine management computer, **component code 120**. If the connections are faulty and there is a repair method (see **Technical Note 6015A, Repairing electrical wiring, Wiring: Precautions for repairs**) repair the wiring, otherwise replace the wiring.
If the **fault is still present**, contact the Techline.

AFTER REPAIR	Deal with any faults displayed by the **diagnostic tool**. Clear the computer memory. Carry out a road test followed by another check with the **diagnostic tool**.

GETtheMANUALS.org

DF272 CONTINUED 1	

1.DEF	***NOTES***	**Conditions for applying the fault finding procedure to stored faults:** – the **level 1** and **OBD** warning lights are lit. – limitation of performance: 30% accelerator pedal, – limitation of the quantity of fuel injected, – turbocharger command inactive, – EGR command inactive.

Replace the exhaust gas recirculation valve.
Clear the fault memory and start the engine. If the **fault is still present**, contact the Techline.

CC	***NOTES***	**Conditions for applying the fault finding procedure to stored faults:** The fault is considered present if: – the **level 1** and **OBD** warning lights are lit, – limitation of performance: 30% accelerator pedal, – limitation of the quantity of fuel injected, – EGR command inactive.

Disconnect connector **B** from the engine management computer and the exhaust gas recirculation valve connector.
Measure the resistance of the exhaust gas recirculation valve between connections **3VP** and **3VQ** of the connector for component **169**. Replace the exhaust gas recirculation valve, if the resistance is not **2.45 Ω ± 0.75**.
Switch on the ignition. Check the voltage of connector **B** on the following connections: – connection code **3VP**, – connection code **3VQ**, of connector **B** of the engine management computer, **component code 120**. Replace the exhaust gas recirculation valve, if the resistance is not **2.45 Ω ± 0.75**. If there is a voltage, repair the wiring harness. If the connections are faulty and there is a repair method (see **Technical Note 6015A, Repairing electrical wiring, Wiring: Precautions for repairs**) repair the wiring, otherwise replace the wiring.

AFTER REPAIR	Deal with any faults displayed by the **diagnostic tool**. Clear the computer memory. Carry out a road test followed by another check with the **diagnostic tool**.

GETtheMANUALS.org

DF272 CONTINUED 2	

Switch off the ignition.
Check the **insulation against earth, continuity and the absence of interference resistance** on the following connections:
– connection code **3VP**,
– connection code **3VQ**,
between the exhaust gas recirculation valve, **component code 169** and the engine management computer, **component code 120**.
The resistance is equal to or greater than 10 MΩ.
If the connections are faulty and there is a repair method (see **Technical Note 6015A, Repairing electrical wiring, Wiring: Precautions for repairs**) repair the wiring, otherwise replace the wiring.

If the **fault is still present**, contact the Techline.

AFTER REPAIR	Deal with any faults displayed by the **diagnostic tool**. Clear the computer memory. Carry out a road test followed by another check with the **diagnostic tool**.

GETtheMANUALS.org

DF276 PRESENT OR STORED	INJECTOR CODE PROGRAMMING 1.DEF: Code not programmed 2.DEF: Inconsistency 3.DEF: Internal electronic fault

NOTES	**Special notes:** If the fault is present: – the injection flow will be limited, – engine torque limited, resulting in a maximum engine speed of **1500 rpm**.

1.DEF	***NOTES***	This fault appears when an injector code has not been entered via command **SC002 Enter injector codes**.

Check the injector codes and reprogram the correct codes using command **SC002 Enter injector codes**.
(consult the procedures defined in the section **Interpretation of commands**).
– After the codes have been written:
  – Switch off the ignition.
  – Wait for the end of the power latch* phase and switch on the ignition again.
  – Establish dialogue and clear the fault memory.
  – End of operation.

WARNING
If fault **DF276 Program injector codes** is still present after the injector codes have been entered, check that the power-latch* is executed each time the ignition is switched off.
– Switch off the ignition.
– Wait for the end of the power latch* phase then switch on the ignition again.
– Establish dialogue.
If the fault becomes stored, clear the fault memory and end the operation.

If the fault is present, contact Techline.

* The immobiliser warning light will flash a few seconds after the ignition is switched off.

AFTER REPAIR	Deal with any faults displayed by the **diagnostic tool**. Clear the computer memory. Carry out a road test followed by another check with the **diagnostic tool**.

GETtheMANUALS.org

DF276 CONTINUED 1	

2.DEF	***NOTES***	**Conditions for applying the fault finding procedure to stored faults:** The fault is declared present after: – the injection computer is replaced, – reprogramming.

This fault is present on all blank computers (new or after reprogramming).
– Program the injector codes using:
  – either command **SC001 Write saved data**,
  – or command **SC002 Enter injector codes**.

(Consult the procedures defined in the section **Interpretation of commands**).
– After the codes have been written:
  – Switch off the ignition.
  – Wait for the end of the power latch* phase and switch on the ignition again.
  – Establish dialogue and clear the fault memory.
  – End of operation.

WARNING
If fault **DF276 Program injector codes** is still present after the injector codes have been entered, check that the power-latch* is executed each time the ignition is switched off.
If the **fault is still present**, contact the Techline.

* The immobiliser warning light will flash a few seconds after the ignition is switched off.

AFTER REPAIR	Deal with any faults displayed by the **diagnostic tool**. Clear the computer memory. Carry out a road test followed by another check with the **diagnostic tool**.

GETtheMANUALS.org

DF276 CONTINUED 2	

3.DEF	***NOTES***	**Priority when dealing with a number of faults:** Deal with the other faults first if they are present or stored.
		Conditions for applying the fault finding procedure to stored faults: This fault appears when there is an incorrect injector code in the injection computer memory.

– Check the injector codes.
If the code is not correct, run command **SC002 Enter injector codes**.
If the code is correct, continue the procedure.
– Switch off the ignition.
– Wait for the end of the power latch* phase then switch on the ignition again.
– Establish dialogue.
If the fault becomes **stored**, clear the fault memory and end the operation.
If the fault is still **present**, contact the Techline.

* The immobiliser warning light will flash a few seconds after the ignition is switched off.

AFTER REPAIR	Deal with any faults displayed by the **diagnostic tool**. Clear the computer memory. Carry out a road test followed by another check with the **diagnostic tool**.

GETtheMANUALS.org

DF279 PRESENT OR STORED	EXCESSIVE ENGINE SPEED 1.DEF: Above maximum threshold

NOTES	**Priority when dealing with a number of faults:** Deal with the other faults first if they are present or stored.
	Conditions for applying the fault finding procedure to stored faults: The fault is declared present if the engine speed has exceeded **5300 rpm**.
	Special notes: Use bornier **Elé. 1681** for all operations on the engine management computer connectors.

Check the engine oil level. Top up the oil level if necessary.
Check the condition of the turbocharger, apply **test 7 Variable geometry turbocharger command** and **test 8 Turbocharger rotating part**. Repair if necessary.
Check the condition of the vacuum pump and its pipes. Repair if necessary.
Check the oil vapour rebreathing circuit. Repair if necessary.
Check the diesel injection system. Repair if necessary.
Check the condition of the engine (compression values and condition of heater plugs). Repair if necessary.
If the **fault is still present**, contact the Techline.

AFTER REPAIR	Deal with any faults displayed by the **diagnostic tool**. Clear the computer memory. Carry out a road test followed by another check with the **diagnostic tool**.

GETtheMANUALS.org

DF333 PRESENT OR STORED	INJECTION → AUTOMATIC TRANSMISSION CONNECTION 1.DEF: Multiplex network

NOTES	**Special notes:** – Use bornier **Elé. 1681** for all operations on the engine management computer connectors. – **Do not clear the fault before reading the contexts of the fault.** (see **Wiring Diagram Technical Note, Vel Satis phase 2**) (see **Wiring Diagram Technical Note, Espace IV phase 2**)
	Conditions for applying the fault finding procedure to stored faults: The fault is declared present if the **OBD** warning light is lit.

Check the multiplex network.

Check status **ET285 Injection → Automatic transmission connection** in the Fault context window in the Current context section. Status **ET285** is **ABSENT** if the fault is present.

Check the **insulation against earth, continuity and the absence of interference resistance** on the following connections:
– connection code **3MT**,
– connection code **3MS**,
between the automatic transmission computer, **component code 119** and the engine management computer, **component code 120**.
If the connections are faulty and there is a repair method (see **Technical Note 6015A, Repairing electrical wiring, Wiring: Precautions for repairs**) repair the wiring, otherwise replace the wiring.
If the fault is still present, check that the automatic transmission computer is recognised by the CLIP **diagnostic tool**.
If communication is not established (see **MR 404, 23A, Automatic transmission**).

AFTER REPAIR	Deal with any faults displayed by the **diagnostic tool**. Clear the computer memory. Carry out a road test followed by another check with the **diagnostic tool**.

GETtheMANUALS.org

DF358 PRESENT OR STORED	INJECTOR CONTROL COMPUTER 1.DEF: Abnormal voltage 2.DEF: Inconsistency 3.DEF: Internal electronic fault

NOTES	**Special notes:** – Use bornier **Elé. 1681** for all operations on the engine management computer connectors. – **Do not clear the fault before reading the contexts of the fault.** (see **Wiring Diagram Technical Note, Vel Satis phase 2**) (see **Wiring Diagram Technical Note, Espace IV phase 2**)

1.DEF	***NOTES***	**Conditions for applying the fault finding procedure to stored faults:** The fault is considered present if: – engine speed is **500 rpm** minimum, – under + APC, – battery voltage is greater than **11 V**, – there are no injector faults, – the **level 2** warning light is lit.

Check the voltage of connection **3FB** of the injector control computer, component code 1167. The voltage is equal to **PR074 Battery voltage**. If not, repair. If the connections are faulty and there is a repair method (see **Technical Note 6015A, Repairing electrical wiring, Wiring: Precautions for repairs**) repair the wiring, otherwise replace the wiring.
Check **for continuity and the absence of interference resistance** on the connection between: – connection code **N***, between the injector control computer, **component code 1167** and the vehicle earth. If the connections are faulty and there is a repair method (see **Technical Note 6015A, Repairing electrical wiring, Wiring: Precautions for repairs**) repair the wiring, otherwise replace the wiring.
Clear the fault memory and start the engine. If the fault is still present, replace the injector control computer.
Clear the fault memory and start the engine.
If the **fault is still present**, contact the Techline.

AFTER REPAIR	Deal with any faults displayed by the **diagnostic tool**. Clear the computer memory. Carry out a road test followed by another check with the **diagnostic tool**.

GETtheMANUALS.org

DF358 CONTINUED 1	

2.DEF	***NOTES***	**Conditions for applying the fault finding procedure to stored faults:** The fault is considered present if: – the **level 1** and **OBD** warning lights are lit, – engine speed is **500 rpm** minimum.

Check **ET692 Injector signal fault finding** and **ET693 Injector fault finding** in the **Fault context** window in the **Fault appearance context** section.
One of the two statuses must display an injector number, check the section regarding this injector.

INJECTOR NO. 1

Check the insulation of the coil for injector no. 1 and the casing of injector no. 1.
The resistance is equal to or greater than 10 MΩ.
Replace injector no.1 if necessary.

Check **the insulation from earth, the continuity and the absence of interference resistance** on the following connection:
– connection code **3QP**,
between the injector control computer, **component code 1167** and the engine management computer, **component code 120**.
If the connections are faulty and there is a repair method (see **Technical Note 6015A, Repairing electrical wiring, Wiring: Precautions for repairs**) repair the wiring, otherwise replace the wiring.

Check the **insulation against earth, continuity and the absence of interference resistance** on the following connections:
– connection code **3CR**,
– connection code **3H**,
between the injector control computer, **component code 1167** and the injector no. 1 connector, **component code 193**.
If the connections are faulty and there is a repair method (see **Technical Note 6015A, Repairing electrical wiring, Wiring: Precautions for repairs**) repair the wiring, otherwise replace the wiring.

Continue dealing with fault, after injector no. 6.

AFTER REPAIR	Deal with any faults displayed by the **diagnostic tool**. Clear the computer memory. Carry out a road test followed by another check with the **diagnostic tool**.

GETtheMANUALS.org

DF358 CONTINUED 2	

INJECTOR No.2

Check the insulation of the coil for injector no. 2 and the casing of injector no. 2.
The resistance is equal to or greater than 10 MΩ.
Replace injector no.2 if necessary.

Check **the insulation from earth, the continuity and the absence of interference resistance** on the following connection:
– connection code **3QQ**,
between the injector control computer, **component code 1167** and the engine management computer, **component code 120**.
If the connections are faulty and there is a repair method (see **Technical Note 6015A, Repairing electrical wiring, Wiring: Precautions for repairs**) repair the wiring, otherwise replace the wiring.

Check the **insulation against earth, continuity and the absence of interference resistance** on the following connections:
– connection code **3CS**,
– connection code **3HA**,
between the injector control computer, **component code 1167** and the injector no. 2 connector, **component code 194**.
If the connections are faulty and there is a repair method (see **Technical Note 6015A, Repairing electrical wiring, Wiring: Precautions for repairs**) repair the wiring, otherwise replace the wiring.
Continue dealing with fault, after injector no. 6.

INJECTOR no. 3

Check the insulation of the coil for injector no. 3 and the casing of injector no. 3.
The resistance is equal to or greater than 10 MΩ.
Replace injector no.3 if necessary.

Check **the insulation from earth, the continuity and the absence of interference resistance** on the following connection:
– connection code **3QR**,
between the injector control computer, **component code 1167** and the engine management computer, **component code 120**.
If the connections are faulty and there is a repair method (see **Technical Note 6015A, Repairing electrical wiring, Wiring: Precautions for repairs**) repair the wiring, otherwise replace the wiring.

AFTER REPAIR	Deal with any faults displayed by the **diagnostic tool**. Clear the computer memory. Carry out a road test followed by another check with the **diagnostic tool**.

GETtheMANUALS.org

DF358 CONTINUED 3	

Check the **insulation against earth, continuity and the absence of interference resistance** on the following connections:
– connection code **3CT**,
– connection code **3H**,
between the injector control computer, **component code 1167** and the injector no. 3 connector, **component code 195**.
If the connections are faulty and there is a repair method (see **Technical Note 6015A, Repairing electrical wiring, Wiring: Precautions for repairs**) repair the wiring, otherwise replace the wiring.
Continue dealing with fault, after injector no. 6.

INJECTOR no. 4

Check the insulation of the coil for injector no. 4 and the casing of injector no. 4.
The resistance is equal to or greater than 10 MΩ.
Replace injector no.4 if necessary.

Check **the insulation from earth, the continuity and the absence of interference resistance** on the following connection:
– connection code **3QS**,
between the injector control computer, **component code 1167** and the engine management computer, **component code 120**.
If the connections are faulty and there is a repair method (see **Technical Note 6015A, Repairing electrical wiring, Wiring: Precautions for repairs**) repair the wiring, otherwise replace the wiring.

Check the **insulation against earth, continuity and the absence of interference resistance** on the following connections:
– connection code **3CU**,
– connection code **3HA**,
between the injector control computer, **component code 1167** and the injector no.4 connector, **component code 196**.
If the connections are faulty and there is a repair method (see **Technical Note 6015A, Repairing electrical wiring, Wiring: Precautions for repairs**) repair the wiring, otherwise replace the wiring.
Continue dealing with fault, after injector no. 6.

AFTER REPAIR	Deal with any faults displayed by the **diagnostic tool**. Clear the computer memory. Carry out a road test followed by another check with the **diagnostic tool**.

GETtheMANUALS.org

DF358 CONTINUED 4	

INJECTOR NO. 5

Check the insulation of the coil for injector no. 5 and the casing of injector no. 5.
The resistance is equal to or greater than 10 MΩ.
Replace injector no.5 if necessary.

Check **the insulation from earth, the continuity and the absence of interference resistance** on the following connection:
– connection code **3QT**,
between the injector control computer, **component code 1167** and the engine management computer, **component code 120**.
If the connections are faulty and there is a repair method (see **Technical Note 6015A, Repairing electrical wiring, Wiring: Precautions for repairs**) repair the wiring, otherwise replace the wiring.

Check the **insulation against earth, continuity and the absence of interference resistance** on the following connections:
– connection code **3DM**,
– connection code **3H**,
between the injector control computer, **component code 1167** and the injector no. 5 connector, **component code 197**.
If the connections are faulty and there is a repair method (see **Technical Note 6015A, Repairing electrical wiring, Wiring: Precautions for repairs**) repair the wiring, otherwise replace the wiring.
Continue dealing with fault, after injector no. 6.

INJECTOR NO. 6

Check the insulation of the coil for injector no.6 and the casing of injector no.6.
The resistance is equal to or greater than 10 MΩ.
Replace injector no. 6 if necessary.

Check **the insulation from earth, the continuity and the absence of interference resistance** on the following connection:
– connection code **3QU**,
between the injector control computer, **component code 1167** and the engine management computer, **component code 120**.
If the connections are faulty and there is a repair method (see **Technical Note 6015A, Repairing electrical wiring, Wiring: Precautions for repairs**) repair the wiring, otherwise replace the wiring.

AFTER REPAIR	Deal with any faults displayed by the **diagnostic tool**. Clear the computer memory. Carry out a road test followed by another check with the **diagnostic tool**.

GETtheMANUALS.org

DF358 CONTINUED 5	

Check the **insulation against earth, continuity and the absence of interference resistance** on the following connections:
– connection code **3EK**,
– connection code **3HA**,
between the injector control computer, **component code 1167** and the injector no.6 connector, **component code 198**.
If the connections are faulty and there is a repair method (see **Technical Note 6015A, Repairing electrical wiring, Wiring: Precautions for repairs**) repair the wiring, otherwise replace the wiring.

After dealing with the fault:
Clear the fault memory and start the engine.
Carry out another fault finding procedure using the **diagnostic tool**.

If **the fault is still present**, replace the injector control computer.

Clear the fault memory and start the engine.
Carry out another fault finding procedure using the **diagnostic tool**.

If the **fault is still present**, contact the Techline.

3.DEF	***NOTES***	**Conditions for applying the fault finding procedure to stored faults:** The fault is considered present if: – the **level 2** warning light is lit, – engine speed is **500 rpm** minimum.

Clear the fault memory and start the engine.
Carry out another fault finding procedure using the **diagnostic tool**.

Check **ET692 Injector signal fault finding** and **ET693 Injector fault finding** in the **Fault context** window in the **Fault appearance context** section.
One of the two statuses must display an injector number, check the section regarding this injector.

INJECTOR NO. 1

Check the insulation of the coil for injector no. 1 and the casing of injector no. 1.
The resistance is equal to or greater than 10 MΩ.
Replace injector no.1 if necessary.

AFTER REPAIR	Deal with any faults displayed by the **diagnostic tool**. Clear the computer memory. Carry out a road test followed by another check with the **diagnostic tool**.

GETtheMANUALS.org

DF358 CONTINUED 6	

Check the **insulation against earth, continuity and the absence of interference resistance** on the following connections:
– connection code **3CR**,
– connection code **3H**,
between the injector control computer, **component code 1167** and the injector no. 1 connector, **component code 193**.
If the connections are faulty and there is a repair method (see **Technical Note 6015A, Repairing electrical wiring, wiring: precautions for repairs**) repair the wiring, otherwise replace the wiring.
Continue dealing with fault, after injector no. 6.

INJECTOR NO. 2

Check the insulation of the coil for injector no. 2 and the casing of injector no. 2.
The resistance is equal to or greater than 10 MΩ.
Replace injector no.2 if necessary.

Check the **insulation against earth, continuity and the absence of interference resistance** on the following connections:
– connection code **3CS**,
– connection code **3HA**,
between the injector control computer, **component code 1167** and the injector no. 2 connector, **component code 194**.
If the connections are faulty and there is a repair method (see **Technical Note 6015A, Repairing electrical wiring, Wiring: Precautions for repairs**) repair the wiring, otherwise replace the wiring.
Repair if necessary.
Continue dealing with fault, after injector no. 6.

AFTER REPAIR	Deal with any faults displayed by the **diagnostic tool**. Clear the computer memory. Carry out a road test followed by another check with the **diagnostic tool**.

GETtheMANUALS.org

DF358 CONTINUED 7	

INJECTOR no. 3

Check the insulation of the coil for injector no. 3 and the casing of injector no. 3.
The resistance is equal to or greater than 10 MΩ.
Replace injector no.3 if necessary.

Check the **insulation against earth, continuity and the absence of interference resistance** on the following connections:
– connection code **3CT**,
– connection code **3H**,
between the injector control computer, **component code 1167** and the injector no. 3 connector, **component code 195**.
If the connections are faulty and there is a repair method (see **Technical Note 6015A, Repairing electrical wiring, Wiring: Precautions for repairs**) repair the wiring, otherwise replace the wiring.
Continue dealing with fault, after injector no. 6.

INJECTOR no. 4

Check the insulation of the coil for injector no. 4 and the casing of injector no. 4.
The resistance is equal to or greater than 10 MΩ.
Replace injector no.4 if necessary.

Check the **insulation against earth, continuity and the absence of interference resistance** on the following connections:
– connection code **3CU**,
– connection code **3HA**,
between the injector control computer, **component code 1167** and the injector no.4 connector, **component code 196**.
If the connections are faulty and there is a repair method (see **Technical Note 6015A, Repairing electrical wiring, Wiring: Precautions for repairs**) repair the wiring, otherwise replace the wiring.
Continue dealing with fault, after injector no. 6.

AFTER REPAIR	Deal with any faults displayed by the **diagnostic tool**. Clear the computer memory. Carry out a road test followed by another check with the **diagnostic tool**.

GETtheMANUALS.org

DF358 CONTINUED 8	

INJECTOR NO. 5

Check the insulation of the coil for injector no. 5 and the casing of injector no. 5.
The resistance is equal to or greater than 10 MΩ.
Replace injector no.5 if necessary.

Check the **insulation against earth, continuity and the absence of interference resistance** on the following connections:
– connection code **3DM**,
– connection code **3H**,
between the injector control computer, **component code 1167** and the injector no. 5 connector, **component code 197**.
If the connections are faulty and there is a repair method (see **Technical Note 6015A, Repairing electrical wiring, Wiring: Precautions for repairs**) repair the wiring, otherwise replace the wiring.
Continue dealing with fault, after injector no. 6.

INJECTOR NO. 6

Check the insulation of the coil for injector no.6 and the casing of injector no.6.
The resistance is equal to or greater than 10 MΩ.
Replace injector no. 6 if necessary.

Check the **insulation against earth, continuity and the absence of interference resistance** on the following connections:
– connection code **3EK**,
– connection code **3HA**,
between the injector control computer, **component code 1167** and the injector no.6 connector, **component code 198**.
If the connections are faulty and there is a repair method (see **Technical Note 6015A, Repairing electrical wiring, Wiring: Precautions for repairs**) repair the wiring, otherwise replace the wiring.

After dealing with the fault:
Clear the fault memory and start the engine.
Carry out another fault finding procedure using the **diagnostic tool**.

If the fault is still present, replace the injector control computer.

Clear the fault memory and start the engine.
Carry out another fault finding procedure using the **diagnostic tool**.

If the fault is still present, contact the Techline.

AFTER REPAIR	Deal with any faults displayed by the **diagnostic tool**. Clear the computer memory. Carry out a road test followed by another check with the **diagnostic tool**.

GETtheMANUALS.org

DF374 PRESENT OR STORED	COMPUTER 1.DEF: Inconsistency 2.DEF: Internal electronic fault 3.DEF: Error during acquisition

NOTES	**Special notes:** Use bornier **Elé. 1681** for all operations on the engine management computer connectors.

1.DEF	***NOTES***	**Conditions for applying the fault finding procedure to stored faults:** The fault is declared present if the **level 2** warning light is lit.

If the fault is **stored**, clear the fault from the computer memory.
Switch off the ignition, wait **2 minutes** then switch on the ignition again.
Establish dialogue again.

If **the fault is still present**, contact the Techline.

2.DEF	***NOTES***	**Conditions for applying the fault finding procedure to stored faults:** If the fault is declared present after: – starting the engine, – a road test. **Special notes:** The **level 2** warning light is lit.

If the fault is **stored**, clear the fault from the computer memory.
Switch off the ignition, wait **2 minutes** then switch on the ignition again.
Establish dialogue again.

If **the fault is still present**, contact the Techline.

AFTER REPAIR	Deal with any faults displayed by the **diagnostic tool**. Clear the computer memory. Carry out a road test followed by another check with the **diagnostic tool**.

GETtheMANUALS.org

DF374 CONTINUED	

3.DEF	***NOTES***	**Conditions for applying the fault finding procedure to stored faults:** If the fault is declared present after: – starting the engine, – a road test. **Special notes:** The **level 2** warning light is lit.

This fault is **present** following unauthorised internal modification of the injection computer or immediately after replacing the computer.

AFTER REPAIR	Deal with any faults displayed by the **diagnostic tool**. Clear the computer memory. Carry out a road test followed by another check with the **diagnostic tool**.

GETtheMANUALS.org

DF569 PRESENT OR STORED	TURBOCHARGING CIRCUIT 1.DEF: Measured pressure lower than the reference pressure 2.DEF: Measured pressure greater than the reference pressure 3.DEF: Inconsistency with atmospheric pressure

NOTES	**Special notes:** Use bornier **Elé. 1681** for all operations on the engine management computer connectors.

1.DEF	***NOTES***	**Conditions for applying the fault finding procedure to stored faults:** – the **level 1** warning light is lit, – limitation of performance: 30% accelerator pedal, – limitation of the quantity of fuel injected.

Check the connections and for any damage or blockages of the turbocharging air ducts: apply **test 4 Turbocharging and air inlet circuit check**. Repair if necessary. Replace the duct(s) if necessary.
Clear the fault memory and start the engine. If **the fault is still present**, apply **test 7 Variable geometry turbocharger command**.
Clear the fault memory and start the engine. If the fault is still present, **contact the Techline**.

2.DEF	***NOTES***	**Conditions for applying the fault finding procedure to stored faults:** – the **level 1** warning light is lit, – limitation of performance: 30% accelerator pedal, – limitation of the quantity of fuel injected.

Check the connections and for any damage or blockages of the turbocharging air ducts: apply **test 4 Turbocharging and air inlet circuit check**. Repair if necessary. Replace the duct(s) if necessary.
Clear the fault memory and start the engine. If **the fault is still present**, apply **test 7 Variable geometry turbocharger command**.
Clear the fault memory and start the engine. If the **fault is still present**, contact the Techline.

AFTER REPAIR	Deal with any faults displayed by the **diagnostic tool**. Clear the computer memory. Carry out a road test followed by another check with the **diagnostic tool**.

GETtheMANUALS.org

DF569 CONTINUED	

3.DEF	***NOTES***	**Conditions for applying the fault finding procedure to stored faults:** – limitation of performance: 30% accelerator pedal, – limitation of the quantity of fuel injected, – the turbocharger command inactive, – the **level 1** warning light is lit.

Check that **PR035 Atmospheric pressure** and **PR041 Turbocharging pressure** are consistent, with the ignition on.
Check the connections and for any damage or blockages of the turbocharging air ducts: apply **test 4 Turbocharging and air inlet circuit check**. Repair if necessary. Replace the duct(s) if necessary.
Clear the fault memory and start the engine. If **the fault is still present**, apply **test 7 Variable geometry turbocharger command**.
Clear the fault memory and start the engine. If the fault is still present, **contact the Techline**.

AFTER REPAIR	Deal with any faults displayed by the **diagnostic tool**. Clear the computer memory. Carry out a road test followed by another check with the **diagnostic tool**.

GETtheMANUALS.org

DF644 PRESENT OR STORED	FUEL FLOW REGULATOR CIRCUIT CC.1: Short circuit to + 12 V CC: Short circuit CO.0: Open circuit or short circuit to earth 1.DEF: Inconsistency

NOTES	**Special notes:** Use bornier **Elé. 1681** for all operations on the engine management computer connectors. (see **Wiring Diagram Technical Note, Vel Satis phase 2**) (see **Wiring Diagram Technical Note, Espace IV phase 2**)

CC.1	***NOTES***	**Conditions for applying the fault finding procedure to stored faults:** – the **level 2** warning light is lit, – engine switched off, – under **+ APC**.

Switch off the ignition. Disconnect connector **H5** (black 9-track intermediate connector) (near the engine oil filler cap).
Switch on the ignition. Measure the voltage on the following connections: – connection code **3QM**, – connection code **3QN**, of connector H5 (carry out the test on the engine management computer wiring side). **If there is no voltage**, repair the wiring harness on the fuel flow regulators side. If the connections are faulty and there is a repair method (see **Technical Note 6015A, Repairing electrical wiring, Wiring: Precautions for repairs**) repair the wiring, otherwise replace the wiring. If **there is a voltage**, move to the next step.
Switch off the ignition. Disconnect connector **B** from the engine management computer.
Switch on the ignition. Measure the voltage on the following connections: – connection code **3QM**, – connection code **3QN**, of the engine management computer, **component code 120**. **If there is no voltage**, repair the wiring harness. If the connections are faulty and there is a repair method (see **Technical Note 6015A, Repairing electrical wiring, Wiring: Precautions for repairs**) repair the wiring, otherwise replace the wiring.
If **there is a voltage**, contact the Techline.

AFTER REPAIR	Deal with any faults displayed by the **diagnostic tool**. Clear the computer memory. Carry out a road test followed by another check with the **diagnostic tool**.

GETtheMANUALS.org

DF644 **CONTINUED 1**	

CC	***NOTES***	**Conditions for applying the fault finding procedure to stored faults:** – **level 1** warning light on, – limitation of performance: 30% accelerator pedal, – limitation of the quantity of fuel injected, – engine speed at **1000 rpm**.

Disconnect connector **H5** (black 9-track intermediate connector) (near the engine oil filler cap).
Measure the resistance of the two fuel flow regulators between connections **3LQ** and **3QM** and connections **3LQ** and **3QN** of connector **H5** (carry out the test on the side of the fuel flow regulator wiring). Replace the injection pump, if the resistance is not **1.6 Ω ± 0.3 at + 20 °C**.
Check for **insulation against earth, continuity and absence of interference resistance** on the following connections: – connection code **3LQ**, – connection code **3QM**, – connection code **3QN**, of connector **H5** (Carry out the test on the side of the fuel flow regulator wiring). The resistance is equal to or greater than 10 MΩ. If the connections are faulty and there is a repair procedure (see **Technical Note 6015A, Repairing electrical wiring, wiring: precautions for repairs**) repair the wiring, otherwise change the wiring.
If **the fault is still present**, contact the Techline.

AFTER REPAIR	Deal with any faults detected by the **diagnostic tool**. Clear the computer memory. Carry out a road test followed by another check with the **diagnostic tool**.

GETtheMANUALS.org

DF644 **CONTINUED 2**	

CO.0	***NOTES***	**Conditions for applying the fault finding procedure to stored faults:** – **level 1** warning light on, – limitation of performance: 30% accelerator pedal, – limitation of the quantity of fuel injected.

Manipulate the wiring harness between the engine management computer and the fuel flow regulators to detect a status change (present ↔ stored). (Without removal). Look for possible damage to the wiring harness, check the **connection and condition** of the injection computer and connector **H5** (black 9-track intermediate connector) (near the engine oil filler cap). If the connections are faulty and there is a repair procedure (see **Technical Note 6015A, Repairing electrical wiring, wiring: precautions for repairs**) repair the wiring, otherwise change the wiring.
Look for any possible damage to connector **H5** and to the wiring, as well as any poor connections. If the connections are faulty and there is a repair procedure (see **Technical Note 6015A, Repairing electrical wiring, wiring: precautions for repairs**) repair the wiring, otherwise change the wiring.
Disconnect connector **B** from the engine management computer.
Measure the resistance between **connections 3LQ and 3QN, and connections 3LQ and 3QM** of the wiring of connector **B** of the engine management computer. If the resistance is not **1.6 Ω ± 0.3 at + 20 °C**.
Disconnect connector **H5** (black 9-track intermediate connector). Measure the resistance of the two fuel flow regulators between connections **3LQ** and **3QM** of connector **H5** and connections **3LQ** and **3QN** of connector **H5**. The resistance is **1.6 Ω ± 0.3 at + 20 °C**. If the resistance is correct, repair the wiring between the engine management computer and connector **H5** (see **Technical Note 6015A, Repairing electrical wiring, wiring: precautions for repairs**).
If the resistance is not correct: Disconnect connectors **E31** and **E32** from the fuel flow regulators. Measure the resistance between **connections 3LQ and 3QN, and connections 3LQ and 3QM** of the two fuel flow regulators, **component code 1105**. Replace the injection pump, if the resistance is not **1.6 Ω ± 0.3 at + 20 °C**. If the resistance is correct, If the connections are faulty and there is a repair procedure (see **Technical Note 6015A, Repairing electrical wiring, wiring: precautions for repairs**) repair the wiring, otherwise change the wiring.
If **the fault is still present**, contact the Techline.

AFTER REPAIR	Deal with any faults detected by the **diagnostic tool**. Clear the computer memory. Carry out a road test followed by another check with the **diagnostic tool**.

GETtheMANUALS.org

DF644 **CONTINUED 3**	

1.DEF	***NOTES***	**Conditions for applying the fault finding procedure to stored faults:** – the **level 2** warning light is lit, – the engine is switched off.

Look for possible damage or poor connections on the fuel flow regulator connectors and wiring connectors (without removal). If the connections are faulty and there is a repair procedure (see **Technical Note 6015A, Repairing electrical wiring, wiring: precautions for repairs**) repair the wiring, otherwise change the wiring.
Disconnect connector **B** from the engine management computer and connector **H5** (black 9-track intermediate connector) (near the engine oil filler cap).
Check **the insulation from earth, the continuity and absence of interference resistance** on the following connection: – connection code **3LQ**, between the engine management computer, **component code 120** and connector **H5**. The resistance is equal to or greater than 10 MΩ. If the connections are faulty and there is a repair procedure (see **Technical Note 6015A, Repairing electrical wiring, wiring: precautions for repairs**) repair the wiring, otherwise change the wiring.
Disconnect connectors **E31** and **E32** from the fuel flow regulators.
Check for **insulation against earth, continuity and absence of interference resistance** on the following connections: – the two connection codes **3LQ**, between connector **H5** and the connector of the fuel flow regulators, **component code 1105**. The resistance is equal to or greater than 10 MΩ. If the connections are faulty and there is a repair procedure (see **Technical Note 6015A, Repairing electrical wiring, wiring: precautions for repairs**) repair the wiring, otherwise change the wiring.
If **the fault is still present**, contact the Techline.

AFTER REPAIR	Deal with any faults detected by the **diagnostic tool**. Clear the computer memory. Carry out a road test followed by another check with the **diagnostic tool**.

GETtheMANUALS.org

DF721 PRESENT OR STORED	ENGINE OVERHEATING 1.DEF: Above maximum threshold

NOTES	**Conditions for applying the fault finding procedure to stored faults:** The fault is present if: – Engine overheating. (see **Technical Note wiring diagram, Vel Satis phase 2**) (see **Technical Note wiring diagram, Espace IV phase 2**)

Check the cooling system and the coolant fluid level.
Check the level and grade of the engine oil.
Top up the levels of fluid if necessary.
Check **the consistency of temperature values from the oil and coolant temperature sensors**.
Repair or replace the faulty components, if necessary.

Check:
– the cooling radiator,
– possible leaks on the cooling hoses and pipes,
– the condition of the oil and coolant temperature sensor connectors,
– irregularities.
Repair if necessary.

Measure the coolant temperature sensor resistance between its connections **3C** and **3CK** of the connector for component **244**.
Replace the sensor if the **resistance** is not **3511 Ω ± 176 at + 20 ˚C**
980 Ω ± 50 at + 50 ˚C
469 Ω ± 23 at + 70 ˚C
242 Ω ± 12 at + 90 ˚C
If the connections are faulty and there is a repair procedure (see **Technical Note 6015A, Repairing electrical wiring, wiring: precautions for repairs**) repair the wiring, otherwise change the wiring.

Check for **insulation against earth, continuity and absence of interference resistance** on the following connections:
– connection code **3C**,
– connection code **3CK**,
between the coolant temperature sensor connector, **component code 244** and the engine management computer, **component code 120**.
If the connections are faulty and there is a repair procedure (see **Technical Note 6015A, Repairing electrical wiring, wiring: precautions for repairs**) repair the wiring, otherwise change the wiring.

AFTER REPAIR	Deal with any faults detected by the **diagnostic tool**. Clear the computer memory. Carry out a road test followed by another check with the **diagnostic tool**.

GETtheMANUALS.org

DF721 **CONTINUED**	

Measure the oil temperature sensor resistance between connections **47Q** and **3CK** of the connector for component **343**.
Replace the sensor if the **resistance** is not: **3511 Ω ± 176 at + 20 ˚C**
980 Ω ± 50 at + 50 ˚C
469 Ω ± 23 at + 70 ˚C
242 Ω ± 12 at + 90 ˚C
If the connections are faulty and there is a repair procedure (see **Technical Note 6015A, Repairing electrical wiring, wiring: precautions for repairs**) repair the wiring, otherwise change the wiring.

Check for **insulation against earth, continuity and absence of interference resistance** on the following connections:
– connection code **47Q**,
– connection code **3CK**,
between the oil temperature sensor connector, **component code 343** and the engine management computer, **component code 120**.
If the connections are faulty and there is a repair procedure (see **Technical Note 6015A, Repairing electrical wiring, wiring: precautions for repairs**) repair the wiring, otherwise change the wiring.

Check that the thermostat is operating correctly.
Repair if necessary.
If the connections are faulty and there is a repair procedure (see **Technical Note 6015A, Repairing electrical wiring, wiring: precautions for repairs**) repair the wiring, otherwise change the wiring.

Check for possible mechanical damage to the engine.
Repair if necessary.

If the fault is still present, contact the Techline.

AFTER REPAIR	Deal with any faults detected by the **diagnostic tool**. Clear the computer memory. Carry out a road test followed by another check with the **diagnostic tool**.

GETtheMANUALS.org

DF891 PRESENT OR STORED	GROUP 1 INJECTORS SUPPLY 1.DEF : Inconsistency CC : Short circuit

NOTES	**Special notes:** – Use bornier **Elé. 1681** for all operations on the engine management computer connectors. – **This fault affects the rear row (injectors no. 1, 3 and 5).** (see **Technical Note wiring diagram, Vel Satis phase 2**) (see **Technical Note wiring diagram, Espace IV phase 2**)

1.DEF	***NOTES***	**Conditions for applying the fault finding procedure to stored faults:** The fault is declared as present if: – the harness or connections are faulty, – under + APC, – the **level 2** warning light is lit.

Clear the fault memory and start the engine. If the fault is still present, disconnect connector **A** form the injector control computer. Switch on the ignition.
Check the voltage between the earth and the following connection: – connection code **3PZ**, of the injector control computer wiring, **component code 1167**. If there is a voltage, move on to the next test. If there is no voltage, replace the injector control computer.
Switch off the ignition. Disconnect connector **A** from the engine management computer.
Check for **continuity and the absence of interference resistance** on the following connection: – connection code **3PZ**, between the injector control computer, **component code 1167** and the engine management computer, **component code 120**. If the connections are faulty and there is a repair procedure (see **Technical Note 6015A, Repairing electrical wiring, wiring: precautions for repairs**) repair the wiring, otherwise change the wiring.
Clear the fault memory and start the engine. If **the fault is still present**, contact the Techline.

AFTER REPAIR	Deal with any faults detected by the **diagnostic tool**. Clear the computer memory. Carry out a road test followed by another check with the **diagnostic tool**.

GETtheMANUALS.org

DF891 **CONTINUED 1**	

CC	***NOTES***	**Conditions for applying the fault finding procedure to stored faults:** The fault is declared present: – the **level 2** warning light is lit.

Disconnect connector **A** from the injector control computer. **Switch on the ignition.**
Check the voltage between the earth and the following connections: – connection code **3QP**, – connection code **3QR**, – connection code **3QT**, of the injector control computer wiring, **component code 1167**. If there is a voltage, repair the wiring harness. If the connections are faulty and there is a repair procedure (see **Technical Note 6015A, Repairing electrical wiring, wiring: precautions for repairs**) repair the wiring, otherwise change the wiring.
Switch off the ignition. Remove connector **A** from the engine management computer.
Check for **insulation against earth, continuity and absence of interference resistance** on the following connections: – connection code **3PZ**, – connection code **3QP**, – connection code **3QR**, – connection code **3QT**, between the injector control computer, **component code 1167** and the engine management computer, **component code 120**. The resistance is equal to or greater than 10 MΩ. If the connections are faulty and there is a repair procedure (see **Technical Note 6015A, Repairing electrical wiring, wiring: precautions for repairs**) repair the wiring, otherwise change the wiring.
Clear the fault memory and start the engine. If the fault is still present, disconnect injector connectors no. 1, 3 and 5. Switch on the ignition.

AFTER REPAIR	Deal with any faults detected by the **diagnostic tool**. Clear the computer memory. Carry out a road test followed by another check with the **diagnostic tool**.

GETtheMANUALS.org

DF891 **CONTINUED 2**	

Check the voltage between the earth and the following connection: – connection code **3CR**, of the connector wiring of injector no. 1, **component code 193**. If there is a voltage, repair the wiring. If the connections are faulty and there is a repair procedure (see **Technical Note 6015A, Repairing electrical wiring, wiring: precautions for repairs**) repair the wiring, otherwise change the wiring.
Check the voltage between the earth and the following connection: – connection code **3CT**, of the connector wiring of injector no. 3, **component code 195**. If there is a voltage, repair the wiring. If the connections are faulty and there is a repair procedure (see **Technical Note 6015A, Repairing electrical wiring, wiring: precautions for repairs**) repair the wiring, otherwise change the wiring.
Check the voltage between the earth and the following connection: – connection code **3DM**, of the connector wiring of injector no. 5, **component code 197**. If there is a voltage, repair the wiring. If the connections are faulty and there is a repair procedure (see **Technical Note 6015A, Repairing electrical wiring, wiring: precautions for repairs**) repair the wiring, otherwise change the wiring.
If there is no voltage: Measure the continuity between connections **3CR** and **3H** of the connector wiring of injector no. 1, **component code 193**. Measure the continuity between connections **3CT** and **3H** of the connector wiring of injector no. 3, **component code 195**. Measure the continuity between connections **3DM** and **3H** of the connector wiring of injector no. 5, **component code 197**. If the connections are faulty and there is a repair procedure (see **Technical Note 6015A, Repairing electrical wiring, wiring: precautions for repairs**) repair the wiring, otherwise change the wiring.
Clear the fault memory and start the engine. If the fault is still present, replace the injector control computer.
Clear the fault memory and start the engine. If the fault is still present, **contact the Techline**.

AFTER REPAIR	Deal with any faults detected by the **diagnostic tool**. Clear the computer memory. Carry out a road test followed by another check with the **diagnostic tool**.

GETtheMANUALS.org

DF892 PRESENT OR STORED	GROUP 2 INJECTORS SUPPLY 1.DEF : Inconsistency CC : Short circuit

NOTES	**Special notes:** – Use bornier **Elé. 1681** for all operations on the engine management computer connectors. – **This fault affects the front row (injectors no. 2, 4 and 6).** (see **Technical Note wiring diagram, Vel Satis phase 2**) (see **Technical Note wiring diagram, Espace IV phase 2**)

1.DEF	***NOTES***	**Conditions for applying the fault finding procedure to stored faults:** The fault is declared as present if: – the harness or connections are faulty, – under + APC, – the **level 2** warning light is lit.

Clear the fault memory and start the engine. If the fault is still present, disconnect connector **A** form the injector control computer. Switch on the ignition.
Check the voltage between the earth and the following connection: – connection code **3ABU**, of the injector control computer wiring, **component code 1167**. If there is a voltage, move on to the next test. If there is no voltage, replace the injector control computer.
Switch off the ignition. Disconnect connector **A** from the engine management computer.
Check for **continuity and the absence of interference resistance** on the following connection: – connection code **3ABU**, between the injector control computer, **component code 1167** and the engine management computer, **component code 120**. If the connections are faulty and there is a repair procedure (see **Technical Note 6015A, Repairing electrical wiring, wiring: precautions for repairs**) repair the wiring, otherwise change the wiring.
Clear the fault memory and start the engine. If **the fault is still present**, contact the Techline.

AFTER REPAIR	Deal with any faults detected by the **diagnostic tool**. Clear the computer memory. Carry out a road test followed by another check with the **diagnostic tool**.

GETtheMANUALS.org

DF892 **CONTINUED 1**	

CC	***NOTES***	**Conditions for applying the fault finding procedure to stored faults:** The fault is declared present: – the **level 2** warning light is lit.

Disconnect connector **A** from the injector control computer. **Switch on the ignition.**
Check the voltage between the earth and the following connections: – connection code **3QQ**, – connection code **3QS**, – connection code **3QV**, of the injector control computer wiring, **component code 1167**. If the connections are faulty and there is a repair procedure (see **Technical Note 6015A, Repairing electrical wiring, wiring: precautions for repairs**) repair the wiring, otherwise change the wiring.
If there is a voltage, repair the wiring harness.
Switch off the ignition. Remove connector **A** from the engine management computer.
Check for **insulation against earth, continuity and absence of interference resistance** on the following connections: – connection code **3ABU**, – connection code **3QQ**, – connection code **3QS**, – connection code **3QV**, between the injector control computer, **component code 1167** and the engine management computer, **component code 120**. The resistance is equal to or greater than 10 MΩ. If the connections are faulty and there is a repair procedure (see **Technical Note 6015A, Repairing electrical wiring, wiring: precautions for repairs**) repair the wiring, otherwise change the wiring.
Clear the fault memory and start the engine. If the fault is still present, disconnect injector connectors **no. 2, 4 and 6**. Switch on the ignition.

AFTER REPAIR	Deal with any faults detected by the **diagnostic tool**. Clear the computer memory. Carry out a road test followed by another check with the **diagnostic tool**.

GETtheMANUALS.org

DF892 **CONTINUED 2**	

Check the voltage between the earth and the following connection: – connection code **3CS**, of the connector wiring of injector no. 2, **component code 194**. If there is a voltage, repair the wiring. If the connections are faulty and there is a repair procedure (see **Technical Note 6015A, Repairing electrical wiring, wiring: precautions for repairs**) repair the wiring, otherwise change the wiring.
Check the voltage between the earth and the following connection: – connection code **3CU**, of the connector wiring of injector no. 4, **component code 196**. If there is a voltage, repair the wiring. If the connections are faulty and there is a repair procedure (see **Technical Note 6015A, Repairing electrical wiring, wiring: precautions for repairs**) repair the wiring, otherwise change the wiring.
Check the voltage between the earth and the following connection: – connection code **3EK**, of the connector wiring of injector no. 6, **component code 198**. If there is a voltage, repair the wiring. If the connections are faulty and there is a repair procedure (see **Technical Note 6015A, Repairing electrical wiring, wiring: precautions for repairs**) repair the wiring, otherwise change the wiring.
If there is no voltage: Measure the continuity between connections **3CS** and **3HA** of the connector wiring of injector no. 2, **component code 194**. Measure the continuity between connections **3CU** and **3HA** of the connector wiring of injector no. 4, **component code 196**. Measure the continuity between connections **3EK** and **3HA** of the connector wiring of injector no. 6, **component code 198**. If the connections are faulty and there is a repair procedure (see **Technical Note 6015A, Repairing electrical wiring, wiring: precautions for repairs**) repair the wiring, otherwise change the wiring.
Clear the fault memory and start the engine. If the fault is still present, replace the injector control computer.
Clear the fault memory and start the engine. If the fault is still present, **contact the Techline**.

AFTER REPAIR	Deal with any faults detected by the **diagnostic tool**. Clear the computer memory. Carry out a road test followed by another check with the **diagnostic tool**.

GETtheMANUALS.org

DF947 PRESENT OR STORED	RAIL PRESSURE LIMITER 1.DEF: Parameter at maximum limit

NOTES	**Priority when dealing with a number of faults:** Prioritise the other present or stored faults.
	Conditions for applying the fault finding procedure to stored faults: – the engine stops, – the **level 2** warning light is lit.

Look for possible diesel fuel leaks.
Repair if necessary.

Clear the fault memory and start the engine.
If the fault is still present, run command **AC029 High pressure circuit sealing test** (look for possible diesel fuel leaks).
If there is significant inconsistency between parameters **PR038 Rail pressure** and **PR008 Rail pressure setpoint** during command **AC029**, replace the injection pump.
If the inconsistency or consistency between **PR038 and PR008** is not obvious, record **30 seconds** of **PR008, PR038 and PR055 Engine speed** from idle speed up to **2000 rpm**, then stabilise it at **2000 rpm** for at least **20 seconds**, then return to idle speed.
Note the difference between **PR038 and PR008**; if there is significant inconsistency, replace the injection pump.

If the fault is still present, run command **AC029** again.
If there is significant inconsistency between parameters **PR038 Rail pressure** and **PR008 Rail pressure setpoint** during command **AC029**, replace the injection pump.
If the inconsistency or consistency between **PR038 and PR008** is not obvious, record **30 seconds** of **PR008, PR038 and PR055 Engine speed** from idle speed up to **2000 rpm**, then stabilise it at **2000 rpm** for at least **20 seconds**, then return to idle speed.
Note the difference between **PR038 and PR008**; if there is significant inconsistency, replace the injector rail.

If the fault is still present, contact the Techline.

AFTER REPAIR	Deal with any faults detected by the **diagnostic tool**. Clear the computer memory. Carry out a road test followed by another check with the **diagnostic tool**.

GETtheMANUALS.org

DF948 PRESENT OR STORED	GMV CONTROL CIRCUIT 1 CO.0 : Open circuit or short circuit to earth CC.1 : Short circuit to + 12 V

NOTES	**Special notes:** Use bornier **Elé. 1681** for all operations on the engine management computer connectors. (see **Technical Note wiring diagram, Vel Satis phase 2**) (see **Technical Note wiring diagram, Espace IV phase 2**)

CO.0	***NOTES***	**Conditions for applying the fault finding procedure to stored faults:** The fault is declared as present if: – the computer does not detect voltage on connections **3JN** when operating the relays, – under **+ after ignition feed**.
		Special note: Run command **AC228 GMV control 1** to check if the relays operate.

Manipulate the wiring harness between the engine management computer and the fan assembly relay to mark a status change (present ↔ stored).
Look for chafing damage on the harness.
If the connections are faulty and there is a repair procedure (see **Technical Note 6015A, Repairing electrical wiring, wiring: precautions for repairs**) repair the wiring, otherwise change the wiring.

Check the connection and condition of the **engine management computer connector**.
If the connections are faulty and there is a repair procedure (see **Technical Note 6015A, Repairing electrical wiring, wiring: precautions for repairs**) repair the wiring, otherwise change the wiring.

Check the connection and condition of the **GMV relay connector**.
If the connections are faulty and there is a repair procedure (see **Technical Note 6015A, Repairing electrical wiring, wiring: precautions for repairs**) repair the wiring, otherwise change the wiring.

Check the **insulation to earth, continuity and the absence of interference resistance** on the following connection:
– connection code **3JN**,
between the GMV relay unit, **component code 1839** and the engine management computer, **component code 120**.
If the connections are faulty and there is a repair procedure (see **Technical Note 6015A, Repairing electrical wiring, wiring: precautions for repairs**) repair the wiring, otherwise change the wiring.

AFTER REPAIR	Deal with any faults detected by the **diagnostic tool**. Clear the computer memory. Carry out a road test followed by another check with the **diagnostic tool**.

GETtheMANUALS.org

DF948 **CONTINUED 1**	

Check for **insulation against earth, continuity and absence of interference resistance** on the following connections:
– connection code **3AJG**,
– connection code **3AJH**,
of the fan assemblies, **component code 188**.
If the connections are faulty and there is a repair procedure (see **Technical Note 6015A, Repairing electrical wiring, wiring: precautions for repairs**) repair the wiring, otherwise change the wiring.

Switch on the ignition.
Run command **AC228 GMV control 1**.
Check the earth on connection **3JN** of the GMV relay unit connector, component code 1839 during this command.
If there is no earth, contact Techline.
If there is an earth, switch off the ignition.
Connect the fan assembly relay unit connector and disconnect the left and right-hand fan assembly connectors.
Switch on the ignition.
Run command **AC228 GMV control 1**.
Check the voltage on connections **3AJG** and **3AJH** of the fan assemblies, **component code 188** during this command.
If there is no voltage, check the wiring between the GMV relay unit and the GMV connectors, if there is no damage, replace the GMV relay unit.
If there is a voltage, check that the fan assemblies operate.
Replace the GMV(s) if the GMV does not operate.
If the GMVs operate, move on to the next stage.

If okay, check the **continuity and the absence of interference resistance** on the three fan assembly relay unit earth connections.
If the connections are faulty and there is a repair procedure (see **Technical Note 6015A, Repairing electrical wiring, wiring: precautions for repairs**) repair the wiring, otherwise change the wiring.
If correct, replace the GMV relay unit.

AFTER REPAIR	Deal with any faults detected by the **diagnostic tool**. Clear the computer memory. Carry out a road test followed by another check with the **diagnostic tool**.

GETtheMANUALS.org

DF948 **CONTINUED 2**	

CC.1	***NOTES***	**Conditions for applying the fault finding procedure to stored faults:** The fault is declared as present if: – the computer detects a voltage on connection **3JN** when operating the relays. **Special note:** Run command **AC228 GMV control 1** to check if the relays operate.

Manipulate the wiring harness between the engine management computer and the fan assembly relay to mark a status change (present ↔ stored). Look for chafing damage on the harness. If the connections are faulty and there is a repair procedure (see **Technical Note 6015A, Repairing electrical wiring, wiring: precautions for repairs**) repair the wiring, otherwise change the wiring.
Check the connection and condition of the **engine management computer connector**. If the connections are faulty and there is a repair procedure (see **Technical Note 6015A, Repairing electrical wiring, wiring: precautions for repairs**) repair the wiring, otherwise change the wiring.
Check the connection and condition of the **GMV relay connector**. If the connections are faulty and there is a repair procedure (see **Technical Note 6015A, Repairing electrical wiring, wiring: precautions for repairs**) repair the wiring, otherwise change the wiring.
Check the **insulation from + 12 V, the continuity and absence of interference resistance** on the following connection: – connection code **3JN**, between the fan assembly relay unit, **component code 1839** and the engine management computer, **component code 120**. If the connections are faulty and there is a repair procedure (see **Technical Note 6015A, Repairing electrical wiring, wiring: precautions for repairs**) repair the wiring, otherwise change the wiring.
Check for **insulation from + 12 V, the continuity and absence of interference resistance** on the following connections: – connection code **3AJG**, – connection code **3AJH**, of the fan assemblies, **component code 188**. If the connections are faulty and there is a repair procedure (see **Technical Note 6015A, Repairing electrical wiring, wiring: precautions for repairs**) repair the wiring, otherwise change the wiring.
If the **fault is still present**, contact the Techline.

AFTER REPAIR	Deal with any faults detected by the **diagnostic tool**. Clear the computer memory. Carry out a road test followed by another check with the **diagnostic tool**.

GETtheMANUALS.org

DF949 PRESENT OR STORED	GMV CONTROL CIRCUIT 2 CO.0 : Open circuit or short circuit to earth CC.1 : Short circuit to + 12 V

NOTES	**Special notes:** Use bornier **Elé. 1681** for all operations on the engine management computer connectors. (see **Technical Note wiring diagram, Vel Satis phase 2**) (see **Technical Note wiring diagram, Espace IV phase 2**)

CO.0	***NOTES***	**Conditions for applying the fault finding procedure to stored faults:** The fault is declared present: – if the computer does not detect voltage on connection **3JP** when operating the relays, – under **+ after ignition feed**.
		Special note: Run the command **AC229 GMV control 2** to check whether the relay is working.

Manipulate the wiring harness between the engine management computer and the fan assembly relays to mark a status change.
Look for chafing damage on the harness.
If the connections are faulty and there is a repair procedure (see **Technical Note 6015A, Repairing electrical wiring, wiring: precautions for repairs**) repair the wiring, otherwise change the wiring.

Check the connection and condition of the **computer connector**.
If the connections are faulty and there is a repair procedure (see **Technical Note 6015A, Repairing electrical wiring, wiring: precautions for repairs**) repair the wiring, otherwise change the wiring.

Check the connection and condition of the **fan assembly relay connector**.
If the connections are faulty and there is a repair procedure (see **Technical Note 6015A, Repairing electrical wiring, wiring: precautions for repairs**) repair the wiring, otherwise change the wiring.

Check the **insulation to earth, continuity and the absence of interference resistance** on the following connection:
– connection code **3JP**,
between the fan assembly relay unit, **component code 1839** and the engine management computer, **component code 120**.
If the connections are faulty and there is a repair procedure (see **Technical Note 6015A, Repairing electrical wiring, wiring: precautions for repairs**) repair the wiring, otherwise change the wiring.

AFTER REPAIR	Deal with any faults detected by the **diagnostic tool**. Clear the computer memory. Carry out a road test followed by another check with the **diagnostic tool**.

GETtheMANUALS.org

DF949 **CONTINUED 1**	

Check for **insulation from + 12 V, the continuity and absence of interference resistance** on the following connections:
– connection code **3AJG**,
– connection code **3AJH**,
of the fan assemblies, **component code 188**.
If the connections are faulty and there is a repair procedure (see **Technical Note 6015A, Repairing electrical wiring, wiring: precautions for repairs**) repair the wiring, otherwise change the wiring.

Switch on the ignition.
Run command **AC229 GMV control 2**.
Check the earth on connection **3JP** of the GMV relay unit connector, **component code 1839** during this command.
If there is no earth, contact Techline.
If there is an earth, switch off the ignition.
Connect the fan assembly relay unit connector and disconnect the left and right-hand fan assembly connectors.
Switch on the ignition.
Run command **AC229 GMV control 2**.
Check the voltage on connections **3AJG** and **3AJH** of the fan assemblies, **component code 188** during this command.
If there is no voltage, check the wiring between the GMV relay unit and the GMV connectors, if there is no damage, replace the GMV relay unit.
If there is a voltage, check that the fan assemblies operate.
Replace the GMV(s) if the GMV does not operate.
If the GMVs operate, move on to the next stage.

If correct, check **the continuity and absence of interference resistance** on the following connections:
Between the vehicle earth and connection codes **MAS**, **component code 1839**.
If the connections are faulty and there is a repair procedure (see **Technical Note 6015A, Repairing electrical wiring, wiring: precautions for repairs**) repair the wiring, otherwise change the wiring.
If correct, replace the GMV relay unit.

AFTER REPAIR	Deal with any faults detected by the **diagnostic tool**. Clear the computer memory. Carry out a road test followed by another check with the **diagnostic tool**.

GETtheMANUALS.org

DF949 **CONTINUED 2**	

CC.1	***NOTES***	**Conditions for applying the fault finding procedure to stored faults:** The fault is declared as present if: – the computer detects a voltage on connection **3JP** when operating the relays.
		Special note: Run the command **AC229 GMV control 2** to check whether the relay is working.

Manipulate the wiring harness between the engine management computer and the fan assembly relay to mark a status change (present ↔ stored). Look for chafing damage on the harness. If the connections are faulty and there is a repair procedure (see **Technical Note 6015A, Repairing electrical wiring, wiring: precautions for repairs**) repair the wiring, otherwise change the wiring.
Check the connection and condition of the **computer connector**. If the connections are faulty and there is a repair procedure (see **Technical Note 6015A, Repairing electrical wiring, wiring: precautions for repairs**) repair the wiring, otherwise change the wiring.
Check the connection and condition of the **GMV relay connector**. If the connections are faulty and there is a repair procedure (see **Technical Note 6015A, Repairing electrical wiring, wiring: precautions for repairs**) repair the wiring, otherwise change the wiring.
Check the **insulation from + 12 V, the continuity and absence of interference resistance** on the following connection: – connection code **3JP**, between the fan assembly relay unit, **component code 1839** and the engine management computer, **component code 120**. If the connections are faulty and there is a repair procedure (see **Technical Note 6015A, Repairing electrical wiring, wiring: precautions for repairs**) repair the wiring, otherwise change the wiring.
Check for **insulation from + 12 V, the continuity and absence of interference resistance** on the following connections: – connection code **3AJG**, – connection code **3AJH**, of the fan assemblies, **component code 188**. If the connections are faulty and there is a repair procedure (see **Technical Note 6015A, Repairing electrical wiring, wiring: precautions for repairs**) repair the wiring, otherwise change the wiring.
If **the fault is still present**, contact the Techline.

AFTER REPAIR	Deal with any faults detected by the **diagnostic tool**. Clear the computer memory. Carry out a road test followed by another check with the **diagnostic tool**.

GETtheMANUALS.org

DF950 PRESENT OR STORED	GMV CONTROL CIRCUIT 3 CO.0 : Open circuit or short circuit to earth CC.1 : Short circuit to + 12 V

NOTES	**Special notes:** Use bornier **Elé. 1681** for all operations on the engine management computer connectors.

CO.0	***NOTES***	**Conditions for applying the fault finding procedure to stored faults:** The fault is declared present: – if the computer does not detect voltage on connection **3AJD** when operating the relays, – under **+ after ignition feed**, **Special note:** Run command **AC230 GMV control 3** to check if the relays operate. (see **Technical Note wiring diagram, Vel Satis phase 2**) (see **Technical Note wiring diagram, Espace IV phase 2**)

Manipulate the wiring harness between the engine management computer and the fan assembly relays to mark a status change.
Look for chafing damage on the harness.
If the connections are faulty and there is a repair procedure (see **Technical Note 6015A, Repairing electrical wiring, wiring: precautions for repairs**) repair the wiring, otherwise change the wiring.

Check the connection and condition of the **computer connector**.
If the connections are faulty and there is a repair procedure (see **Technical Note 6015A, Repairing electrical wiring, wiring: precautions for repairs**) repair the wiring, otherwise change the wiring.

Check the connection and condition of the **GMV relay connector**.
If the connections are faulty and there is a repair procedure (see **Technical Note 6015A, Repairing electrical wiring, wiring: precautions for repairs**) repair the wiring, otherwise change the wiring.

Check the **insulation to earth, continuity and the absence of interference resistance** on the following connection:
– connection code **3AJD**,
between the fan assembly relay unit, **component code 1839** and the engine management computer, **component code 120**.
If the connections are faulty and there is a repair procedure (see **Technical Note 6015A, Repairing electrical wiring, wiring: precautions for repairs**) repair the wiring, otherwise change the wiring.

AFTER REPAIR	Deal with any faults detected by the **diagnostic tool**. Clear the computer memory. Carry out a road test followed by another check with the **diagnostic tool**.

GETtheMANUALS.org

DF950 **CONTINUED 1**	

Check for **insulation against earth, continuity and absence of interference resistance** for the following connections:
– connection code **3AJG**,
– connection code **3AJH**,
of the fan assemblies, **component code 188**.
If the connections are faulty and there is a repair procedure (see **Technical Note 6015A, Repairing electrical wiring, wiring: precautions for repairs**) repair the wiring, otherwise change the wiring.

Switch on the ignition.
Run command **AC230 GMV control 3**.
Check the earth on connection **3AJD** of the GMV relay unit connector during this command.
If there is no earth, contact Techline.
If there is an earth, switch off the ignition.
Connect the fan assembly relay unit connector and disconnect the left and right-hand fan assembly connectors.
Switch on the ignition.
Run command **AC230 GMV control 3**.
Check the voltage on connections **3AJG** and **3AJH** of the fan assemblies, **component code 188** during this command.
If there is no voltage, check the wiring between the GMV relay unit and the GMV connectors, if there is no damage, replace the GMV relay unit.
If there is a voltage, check that the fan assemblies operate.
Replace the GMV(s) if the GMV does not operate.
If the GMVs operate, move on to the next stage.

If correct, check **the continuity and absence of interference resistance** on the following connections:
Between the vehicle earth and connection codes **MAS, component code 1839**.
If the connections are faulty and there is a repair procedure (see **Technical Note 6015A, Repairing electrical wiring, wiring: precautions for repairs**) repair the wiring, otherwise change the wiring.
If correct, replace the GMV relay unit.

AFTER REPAIR	Deal with any faults detected by the **diagnostic tool**. Clear the computer memory. Carry out a road test followed by another check with the **diagnostic tool**.

GETtheMANUALS.org

DF950 **CONTINUED 2**	

CC.1	***NOTES***	**Conditions for applying the fault finding procedure to stored faults:** The fault is declared as present if: – the computer detects a voltage on connection **3AJD** when operating the relays. **Special note:** Run command **AC230 GMV control 3** to check if the relays operate.

Manipulate the wiring harness between the engine management computer and the fan assembly relay to mark a status change (present ↔ stored). Look for chafing damage on the harness. If the connections are faulty and there is a repair procedure (see **Technical Note 6015A, Repairing electrical wiring, wiring: precautions for repairs**) repair the wiring, otherwise change the wiring.
Check the connection and condition of the **computer connector**. If the connections are faulty and there is a repair procedure (see **Technical Note 6015A, Repairing electrical wiring, wiring: precautions for repairs**) repair the wiring, otherwise change the wiring.
Check the connection and condition of the **fan assembly relay connector**. If the connections are faulty and there is a repair procedure (see **Technical Note 6015A, Repairing electrical wiring, wiring: precautions for repairs**) repair the wiring, otherwise change the wiring.
Check the **insulation from + 12 V, continuity and the absence of interference resistance** on the following connection: – connection code **3AJD**, between the fan assembly relay unit, **component code 1839** and the engine management computer, **component code 120**. If the connections are faulty and there is a repair procedure (see **Technical Note 6015A, Repairing electrical wiring, wiring: precautions for repairs**) repair the wiring, otherwise change the wiring.
Check for **insulation from + 12 V, the continuity and absence of interference resistance** on the following connections: – connection code **3AJG**, – connection code **3AJH**, of the fan assemblies, **component code 188**. If the connections are faulty and there is a repair procedure (see **Technical Note 6015A, Repairing electrical wiring, wiring: precautions for repairs**) repair the wiring, otherwise change the wiring.
If **the fault is still present**, contact the Techline.

AFTER REPAIR	Deal with any faults detected by the **diagnostic tool**. Clear the computer memory. Carry out a road test followed by another check with the **diagnostic tool**.

GETtheMANUALS.org

DF951 PRESENT OR STORED	SWIRL FLAP POSITION SENSOR CIRCUIT 1.DEF: Front row swirl flap jammed closed 2.DEF: Front row swirl flap jammed open

NOTES	**Special notes:** Use bornier **Elé. 1681** for all operations on the engine management computer connectors. (see **Technical Note wiring diagram, Vel Satis phase 2**) (see **Technical Note wiring diagram, Espace IV phase 2**)

1.DEF	***NOTES***	**Priority when dealing with a number of faults:** Deal with fault **DF952 Swirl flap circuit** first, if it is present or stored.
		Conditions for applying the fault finding procedure to stored faults: – **level 1** warning light on, – limitation of performance 30% accelerator pedal, – limitation of the quantity of fuel injected, – swirl flap control inactive, – EGR command inactive.

Check the position of the inlet manifold front row swirl flap.
Check the status **ET695 Front row swirl flap position**.
The front row swirl flap must be open.
If it is not, check the swirl flap moves using a vacuum pump. Check status **ET695** changes.
If it does not, replace the front row inlet manifold.

Check for **continuity and the absence of interference resistance** on the following connection:
– connection code **3MD**,
between the swirl flap solenoid valve connector, **component code 1075** and the engine management computer, **component code 120**.
If the connections are faulty and there is a repair procedure (see **Technical Note 6015A, Repairing electrical wiring, wiring: precautions for repairs**) repair the wiring, otherwise change the wiring.

Check **the insulation from earth, the continuity and absence of interference resistance** on the following connection:
– connection code **3ACZ**,
between the front row swirl flap position sensor connector, **component code 1709** and the engine management computer**, component code 120**.
The resistance is equal to or greater than 10 MΩ.
If the connections are faulty and there is a repair procedure (see **Technical Note 6015A, Repairing electrical wiring, wiring: precautions for repairs**) repair the wiring, otherwise change the wiring.

If **the fault is still present**, contact the Techline.

AFTER REPAIR	Deal with any faults detected by the **diagnostic tool**. Clear the computer memory. Carry out a road test followed by another check with the **diagnostic tool**.

GETtheMANUALS.org

DF951 **CONTINUED**	

2.DEF	***NOTES***	**Conditions for applying the fault finding procedure to stored faults:** – **level 1** warning light on, – swirl flap control inactive.

Check the swirl flap moves using a vacuum pump. Check the status **ET695 Front row swirl flap position**. Replace the inlet manifold if necessary. Check the vacuum circuit, if the swirl flap is operating. Repair or replace the vacuum circuit if necessary.
Check for **continuity and the absence of interference resistance** on the following connection: – connection code **3MD**, between the swirl flap solenoid valve connector, **component code 1075** and the engine management computer, **component code 120**. If the connections are faulty and there is a repair procedure (see **Technical Note 6015A, Repairing electrical wiring, wiring: precautions for repairs**) repair the wiring, otherwise change the wiring.
Check the following connections for **continuity and make sure there is no interference resistance**: – connection code **3ACZ**, – connection code **3CJ**, – connection code **3AX**, between the front row swirl flap position sensor connector, **component code 1709** and the engine management computer, **component code 120**. If the connections are faulty and there is a repair procedure (see **Technical Note 6015A, Repairing electrical wiring, wiring: precautions for repairs**) repair the wiring, otherwise change the wiring.
Check the performance of the vacuum pump. The vacuum is greater than **- 900 mbar**. Replace the vacuum pump, if the pump does not perform correctly.
If **the fault is still present**, contact the Techline.

AFTER REPAIR	Deal with any faults detected by the **diagnostic tool**. Clear the computer memory. Carry out a road test followed by another check with the **diagnostic tool**.

GETtheMANUALS.org

DF952 PRESENT OR STORED	SWIRL FLAP CIRCUIT CO.0 : Open circuit or short circuit to earth CC.1 : Short circuit to + 12 V 1.DEF: Back row swirl flap jammed closed 2.DEF: Back row swirl flap jammed open

NOTES	**Special notes:** Use bornier **Elé. 1681** for all operations on the engine management computer connectors. (see **Technical Note wiring diagram, Vel Satis phase 2**) (see **Technical Note wiring diagram, Espace IV phase 2**)

CO.0	***NOTES***	**Conditions for applying the fault finding procedure to stored faults:** The fault is declared present: – **level 1** warning light on, – swirl flap solenoid valve control inactive.

Disconnect the solenoid valve connector from the swirl flaps.
Check the continuity of the swirl flap solenoid valve coil.
Replace the solenoid valve, if the resistance is not **40 Ω ± 4**.

Disconnect connector **B** from the engine management computer.

Check the **insulation from earth, the continuity and absence of interference resistance** on the following connection:
– connection code **3MD**,
between the swirl flap solenoid valve connector, **component code 1075** and the engine management computer, **component code 120**.
If the connections are faulty and there is a repair procedure (see **Technical Note 6015A, Repairing electrical wiring, wiring: precautions for repairs**) repair the wiring, otherwise change the wiring.

If **the fault is still present**, contact the Techline.

AFTER REPAIR	Deal with any faults detected by the **diagnostic tool**. Clear the computer memory. Carry out a road test followed by another check with the **diagnostic tool**.

GETtheMANUALS.org

DF952 **CONTINUED 1**	

CC.1	***NOTES***	**Conditions for applying the fault finding procedure to stored faults:** The fault is declared present: – **level 1** warning light on, – swirl flap solenoid valve active.

Disconnect the solenoid valve connector from the swirl flaps. Check the continuity of the swirl flap solenoid valve coil. Replace the solenoid valve, if the resistance is not **40 Ω ± 4**.
Disconnect connector **B** from the engine management computer. Check the **insulation from + 12 V, the continuity and absence of interference resistance** on the following connection: – connection code **3MD**, between the swirl flap solenoid valve connector, **component code 1075** and the engine management computer, **component code 120**. The resistance is equal to or greater than 10 MΩ. If the connections are faulty and there is a repair procedure (see **Technical Note 6015A, Repairing electrical wiring, wiring: precautions for repairs**) repair the wiring, otherwise change the wiring.
If **the fault is still present**, contact the Techline.

AFTER REPAIR	Deal with any faults detected by the **diagnostic tool**. Clear the computer memory. Carry out a road test followed by another check with the **diagnostic tool**.

GETtheMANUALS.org

DF952 **CONTINUED 2**	

1.DEF	***NOTES***	**Conditions for applying the fault finding procedure to stored faults:** – **level 1** warning light on, – limitation of performance: 30% accelerator pedal, – limitation of the quantity of fuel injected, – swirl flap control inactive, – EGR command inactive.

Check the position of the inlet manifold back row swirl flap.
Check the status **ET696 Back row swirl flap position**.
The back row swirl flap must be open.
If it is not, check the swirl flap moves using a vacuum pump. Check status **ET696** changes.
If it does not, replace the back row inlet manifold.

Check the **insulation from + 12 V, the continuity and absence of interference resistance** on the following connection:
– connection code **3MD**,
between the swirl flap solenoid valve connector, **component code 1075** and the engine management computer, **component code 120**.
If the connections are faulty and there is a repair procedure (see **Technical Note 6015A, Repairing electrical wiring, wiring: precautions for repairs**) repair the wiring, otherwise change the wiring.

Check **the insulation from earth, the continuity and absence of interference resistance** on the following connection:
– connection code **3ACY**,
between the back row swirl flap position sensor connector, **component code 1293** and the engine management computer, **component code 120**.
The resistance is equal to or greater than 10 MΩ.
If the connections are faulty and there is a repair procedure (see **Technical Note 6015A, Repairing electrical wiring, wiring: precautions for repairs**) repair the wiring, otherwise change the wiring.

If **the fault is still present**, contact the Techline.

AFTER REPAIR	Deal with any faults detected by the **diagnostic tool**. Clear the computer memory. Carry out a road test followed by another check with the **diagnostic tool**.

GETtheMANUALS.org

DF952 **CONTINUED 3**	

2.DEF	***NOTES***	**Conditions for applying the fault finding procedure to stored faults:** – **level 1** warning light on, – swirl flap control inactive.

Check the swirl flap moves using a vacuum pump.
Check the status **ET696 Back row swirl flap position**.
Replace the inlet manifold if necessary.
Check the vacuum circuit, if the swirl flap is operating.
Repair or replace the vacuum circuit if necessary.

Check for **continuity and the absence of interference resistance** on the following connection:
– connection code **3MD**,
between the swirl flap solenoid valve connector, **component code 1075** and the engine management computer, **component code 120**.
If the connections are faulty and there is a repair procedure (see **Technical Note 6015A, Repairing electrical wiring, wiring: precautions for repairs**) repair the wiring, otherwise change the wiring.

Check the following connections for **continuity and make sure there is no interference resistance**:
– connection code **3ACY**,
– connection code **3CJ**,
– connection code **3AX**,
between the back row swirl flap position sensor connector, **component code 1293** and the engine management computer, **component code 120**.
If the connections are faulty and there is a repair procedure (see **Technical Note 6015A, Repairing electrical wiring, wiring: precautions for repairs**) repair the wiring, otherwise change the wiring.

Check the performance of the vacuum pump. The vacuum is greater than **- 900 mbar**.
Replace the vacuum pump, if the pump does not perform correctly.

If **the fault is still present**, contact the Techline.

AFTER REPAIR	Deal with any faults detected by the **diagnostic tool**. Clear the computer memory. Carry out a road test followed by another check with the **diagnostic tool**.

GETtheMANUALS.org

DF954 PRESENT OR STORED	TURBOCHARGER CONTROLLER CIRCUIT 1.DEF: No signal 2.DEF: Internal electronic fault 3.DEF: Configuration/Initialisation

NOTES	**Special notes:** Use bornier **Elé. 1681** for all operations on the engine management computer connectors. (see **Technical Note wiring diagram, Vel Satis phase 2**) (see **Technical Note wiring diagram, Espace IV phase 2**)

1.DEF	***NOTES***	**Conditions for applying the fault finding procedure to stored faults:** – **level 1** warning light on, – limitation of performance: 30% accelerator pedal, – limitation of the quantity of fuel injected, – engine speed at **1000 rpm**, – turbocharger inactive,

Disconnect the turbocharger controller connector.
Switch on the ignition.
Check the voltage on connection **3FB** of the turbocharger controller connector, the voltage is equal to **PR074 Battery voltage**.
Check the continuity between connection **M*** of the turbocharger controller connector and **earth**.
If the connections are faulty and there is a repair procedure (see **Technical Note 6015A, Repairing electrical wiring, wiring: precautions for repairs**) repair the wiring, otherwise change the wiring.

Disconnect connector **B** from the engine management computer.

Check for **insulation against earth, continuity and absence of interference resistance** on the following connections:
– connection code **3YQ**,
– connection code **3YP**,
between the turbocharger controller connector, **component code 1862** and the engine management computer, **component code 120**.
The resistance is equal to or greater than 10 MΩ.
If the connections are faulty and there is a repair procedure (see **Technical Note 6015A, Repairing electrical wiring, wiring: precautions for repairs**) repair the wiring, otherwise change the wiring.

AFTER REPAIR	Deal with any faults detected by the **diagnostic tool**. Clear the computer memory. Carry out a road test followed by another check with the **diagnostic tool**.

GETtheMANUALS.org

DF954 **CONTINUED**	

Switch on the ignition.
Check the voltage between the following connections:
– connection code **3YQ**,
– connection code **3YP**,
of the engine management computer, **component code 120**.
If there is a voltage, repair the wiring harness.
If the connections are faulty and there is a repair procedure (see **Technical Note 6015A, Repairing electrical wiring, wiring: precautions for repairs**) repair the wiring, otherwise change the wiring.
If there is no voltage, replace the turbocharger controller.

Clear the fault memory and start the engine.
If the fault is still present, **contact the Techline**.

2.DEF ***3.DEF***	***NOTES***	**Conditions for applying the fault finding procedure to stored faults:** – **level 1** warning light on, – limitation of performance: 30% accelerator pedal, – limitation of the quantity of fuel injected, – engine speed at **1000 rpm**.

Replace the turbocharger controller.

Clear the fault memory and start the engine.
If the **fault is still present**, contact the Techline.

AFTER REPAIR	Deal with any faults detected by the **diagnostic tool**. Clear the computer memory. Carry out a road test followed by another check with the **diagnostic tool**.

GETtheMANUALS.org

DF956 PRESENT OR STORED	LACK OF AIR IN INLET CIRCUIT 1.DEF: Negative loop deviation 2.DEF: EGR valve stuck shut

NOTES	**Special notes:** Use bornier **Elé. 1681** for all operations on the engine management computer connectors.

1.DEF	***NOTES***	**Conditions for applying the fault finding procedure to stored faults:** – **level 1** and **OBD** warning lights on, – fast idle speed, – limitation of performance: 30% accelerator pedal, – limitation of the quantity of fuel injected, – turbocharger regulation cut-off.

Look for any blockages on the air inlet: Apply **test 4: Turbocharging and air inlet circuit check**. Repair if necessary.
Look for any blockages in the EGR valve cooler. Repair if possible or replace it.
Look for any blockages in the EGR valve. Replace the EGR valve if necessary.
Check the condition of the EGR valve duct. Repair if necessary or replace it.
Clear the fault memory and start the engine. If the fault is still present, replace the EGR valve, if it has not been replaced before.
Clear the fault memory and start the engine. If the fault is still present, **contact the Techline**.

AFTER REPAIR	Deal with any faults detected by the **diagnostic tool**. Clear the computer memory. Carry out a road test followed by another check with the **diagnostic tool**.

GETtheMANUALS.org

DF956 **CONTINUED**	

2.DEF	***NOTES***	**Conditions for applying the fault finding procedure to stored faults:** – **level 1** and **OBD** warning lights on, – fast idle speed, – limitation of performance: 30% accelerator pedal, – limitation of the quantity of fuel injected, – the turbocharger command inactive.

Replace the EGR valve.
Clear the fault memory and start the engine. If **the fault is still present**, contact the Techline.

AFTER REPAIR	Deal with any faults detected by the **diagnostic tool**. Clear the computer memory. Carry out a road test followed by another check with the **diagnostic tool**.

GETtheMANUALS.org

DF957 PRESENT OR STORED	TOO MUCH AIR IN THE INLET CIRCUIT 1.DEF: Positive loop deviation 2.DEF: EGR valve jammed open

NOTES	**Special notes:** Use bornier **Elé. 1681** for all operations on the engine management computer connectors.

1.DEF	***NOTES***	**Conditions for applying the fault finding procedure to stored faults:** – **level 1** and **OBD** warning lights on, – fast idle speed, – limitation of performance: 30% accelerator pedal, – limitation of the quantity of fuel injected, – the turbocharger command inactive.

Look for any leaks in the air inlet: Apply **test 4: Turbocharging and air inlet circuit check**. Repair if necessary.
Clear the fault memory and start the engine. If the fault is still present, replace the EGR valve.
Clear the fault memory and start the engine. If the fault is still present, **contact the Techline**.

2.DEF	***NOTES***	**Conditions for applying the fault finding procedure to stored faults:** – **level 1** and **OBD** warning lights on, – limitation of performance: 30% accelerator pedal, – limitation of the quantity of fuel injected, – the EGR valve command inactive, – the turbocharger command inactive.

Replace the EGR valve.
Clear the fault memory and start the engine. If **the fault is still present**, contact the Techline.

AFTER REPAIR	Deal with any faults detected by the **diagnostic tool**. Clear the computer memory. Carry out a road test followed by another check with the **diagnostic tool**.

GETtheMANUALS.org

DF958 PRESENT OR STORED	STARTER BUTTON CIRCUIT CC.1 : Short circuit to + 12 V CO.0 : Open circuit or short circuit to earth

NOTES	**Special notes:** Use bornier **Elé. 1681** for all operations on the engine management computer connectors. (see **Technical Note wiring diagram, Vel Satis phase 2**) (see **Technical Note wiring diagram, Espace IV phase 2**)

CC.1	***NOTES***	None

Disconnect connector **A** from the injection computer.
Switch on the ignition.
Check the voltage on connection code **D** of the injection computer connector.
If the voltage is close to the battery voltage.
Look for a short circuit.
If the connections are faulty and there is a repair procedure (see **Technical Note 6015A, Repairing electrical wiring, wiring: precautions for repairs**) repair the wiring, otherwise change the wiring.

Check the voltage between the UCH and the starter button (see **section 87B, UCH, Starter button**).

If **the fault is still present**, contact the Techline.

AFTER REPAIR	Deal with any faults detected by the **diagnostic tool**. Clear the computer memory. Carry out a road test followed by another check with the **diagnostic tool**.

GETtheMANUALS.org

DF958 **CONTINUED**	

CO.0	***NOTES***	None

Disconnect connector **A** from the injection computer. Disconnect the UCH connector. Disconnect the starter connector.
Check for **insulation against earth, continuity and absence of interference resistance** on the following connections: – connection code **133C**, – connection code **133B**, between the UCH connector, **component code 645** and the engine management computer, **component code 120**. The resistance is equal to or greater than 10 MΩ. If the connections are faulty and there is a repair procedure (see **Technical Note 6015A, Repairing electrical wiring, wiring: precautions for repairs**) repair the wiring, otherwise change the wiring.
If the fault is still present, run fault finding on **the passenger compartment connection unit** (see **section 87B, passenger compartment connection unit**).
Replace the UCH if necessary.
If the fault is still present, contact the Techline.

AFTER REPAIR	Deal with any faults detected by the **diagnostic tool**. Clear the computer memory. Carry out a road test followed by another check with the **diagnostic tool**.

GETtheMANUALS.org

NOTES	Only carry out this conformity check after a **complete check** with the diagnostic tool. The values indicated in this conformity check are only given as examples. **Test conditions: engine stopped, ignition on.**

MAIN SCREEN

Order	Function	Parameter or Status Checked or Action		Display and Notes	Fault finding
1	**Computer after ignition feed**	**ET001:**	+ After ignition computer feed	**PRESENT**	In the event of a fault, refer to the interpretation of **DF046 Battery voltage or DF151 Main relay circuit**.
2	**Engine speed**	**PR055:**	Engine speed	**0 rpm**	In the event of a fault, apply the interpretation of **DF005 Engine speed sensor circuit or DF195 Engine speed/camshaft sensor consistency**.
3	**Vehicle speed**	**PR089:**	Vehicle speed	**Gives the vehicle speed in mph (km/h). 0 mph (0 km/h)**	**Perform a fault finding procedure on the ABS computer.**
4	**Pressure**	**PR038:**	Rail pressure	**0 bar** If the engine has just been stopped, wait a few seconds to obtain this value.	In the event of a fault, apply the interpretation of fault **DF007 Rail pressure sensor circuit or DF947 Rail pressure limiter**.
		PR041:	Turbocharging pressure	**950 < X < 1030 mbar** (depending on altitude)	In the event of a fault, apply the interpretation of **DF954 Turbocharger controller circuit** or **DF569 Turbocharging circuit or DF957 Too much air in inlet circuit or DF956 Lack of air in inlet circuit**.

GETtheMANUALS.org

NOTES	Only carry out this conformity check after a **complete check** with the diagnostic tool. The values indicated in this conformity check are only given as examples. **Test conditions: engine stopped, ignition on.**

MAIN SCREEN (CONTINUED)

Order	Function	Parameter or Status Checked or Action		Display and Notes	Fault finding
5	**Air temperature**	**PR730:**	Air flow sensor temperature	Check the values displayed by the sensors by consulting the **Glossary**.	In the event of a fault, apply the interpretation of **DF039 Air inlet temperature sensor circuit and DF002 Air temperature sensor circuit**.
		PR311:	Manifold air temperature		
6	**Fuel temperature**	**PR063:**	Fuel temperature	**- 40˚C < X < 120˚C**	In the event of a fault, apply the interpretation of **DF098 Fuel temperature sensor circuit**.
7	**Temperature**	**PR064:**	Coolant temperature	Check the values displayed by the sensors by consulting the **Glossary**.	In the event of a fault, apply the interpretation of **DF001 Coolant temperature sensor circuit**.
		PR066:	Oil temperature		In the event of a fault apply the interpretation of **DF058 Oil temperature sensor circuit**.
8	**Battery voltage**	**PR074:**	Battery voltage	**8.5 V < X < 15.8 V**	In the event of a fault, test the battery and carry out a fault finding procedure on the charging circuit.
9	**Sensor feed voltage**	**PR215:**	Sensor supply voltage no. 1	**5.0 V ± 0.1**	In the event of a fault, apply the interpretation of **DF011 Sensor supply voltage no.1, DF012 Sensor supply voltage no.2 and DF013 Sensor supply voltage no.3**.
		PR216:	Sensor supply voltage no. 2		
		PR635:	Sensor supply voltage no. 3		
10	**Injection → automatic transmission connection**	**ET285:**	Injection → automatic transmission connection	**PRESENT**	In the event of a fault, apply the interpretation of **DF333 Injection → automatic transmission connection**.

GETtheMANUALS.org

NOTES	Only carry out this conformity check after a **complete check** with the diagnostic tool. The values indicated in this conformity check are only given as examples. **Test conditions: engine stopped, ignition on.**

AIR CIRCUIT (TURBO/INLET)

Order	Function	Parameter or Status Checked or Action	Display and Notes	Fault finding
1	**Engine speed**	**PR055:** Engine speed	**0 rpm**	In the event of a fault, apply the interpretation of **DF005 Engine speed sensor circuit or DF195 Engine speed/camshaft sensor consistency**.
2	**Air temperature**	**PR730:** Air flow sensor temperature	**- 40˚C < X < 120˚C**	In the event of a fault, apply the interpretation of **DF039 Air inlet temperature sensor circuit and DF002 Air temperature sensor circuit**.
		PR311: Manifold air temperature		
3	**Pressure**	**PR035:** Atmospheric pressure	**950 < X < 1030 mbar** (depending on altitude)	In the event of a fault, apply the interpretation of fault **DF003 Atmospheric pressure sensor circuit**.
		PR041: Turbocharging pressure	**950 < X < 1030 mbar** (depending on altitude)	In the event of a fault, apply the interpretation of fault **DF954 Turbocharger controller circuit** or **DF569 Turbocharging circuit or DF957 Too much air in inlet circuit or DF956 Lack of air in inlet circuit** or **test 4 Turbocharging and air inlet circuit check or test 7 Variable geometry turbocharger command**.
4	**Turbocharger**	**PR766:** Turbocharger position setpoint	**100%**	
		PR767: Turbocharger position	**95% ± 5**	

GETtheMANUALS.org

NOTES	Only carry out this conformity check after a **complete check** with the diagnostic tool. The values indicated in this conformity check are only given as examples. **Test conditions: engine stopped, ignition on.**

AIR CIRCUIT (TURBO/INLET) (CONTINUED 1)

Order	Function	Parameter or Status Checked or Action		Display and Notes	Fault finding
5	**EGR valve OCR***	**PR220:**	EGR valve OCR*	**0%**	In the event of a fault, apply the interpretation of **DF209 EGR valve position sensor circuit** or **DF272 EGR valve control circuit**.
6	**Air flow**	**PR132:**	Air flow	**0 kg per hour**	In the event of a fault, apply the interpretation of **DF056 Air flow sensor circuit or** of **Test 5 Air flowmeter**.
7	**Sensor voltage**	**PR081:**	Inlet temperature sensor voltage	**0.22 V <x <4.9 V**	In the event of a fault, apply the interpretation of **DF039 Air inlet temperature sensor circuit** and **DF002 Air temperature sensor circuit**.
		PR083:	Air temperature sensor voltage	**2.9 ± 0.1 V at + 20˚C**	
		PR079:	Atmospheric pressure sensor voltage	**3.65 V ± 1**	In the event of a fault, apply the interpretation of **DF003 Atmospheric pressure sensor circuit**.
		PR224:	Turbocharging pressure sensor voltage	**1.95 V ± 0.05 at + 20˚C**	In the event of a fault, apply the interpretation of **DF954 Turbocharger controller circuit** or **DF569 Turbocharging circuit or Test 4 Turbocharging and air inlet circuit check or Test 7 Variable geometry turbocharger command**.
		PR225:	Air flow sensor voltage	**1 V ± 0.5**	In the event of a fault, apply the interpretation of **DF056 Air flow sensor circuit or Test 5 Air flow meter**.

*Opening cyclic ratio.

GETtheMANUALS.org

NOTES	Only carry out this conformity check after a **complete check** with the diagnostic tool. The values indicated in this conformity check are only given as examples. **Test conditions: engine stopped, ignition on.**

AIR CIRCUIT (TURBO/INLET) (CONTINUED 2)

Order	Function	Parameter or Status Checked or Action		Display and Notes	Fault finding
8	**Swirl flap**	**ET694:**	Swirl flap position setpoint	**CLOSED**	In the event of a fault, apply the interpretation of **DF951 Swirl flap position sensor circuit** or **DF952 Swirl flap circuit**.
		ET695:	FR* row swirl flap position	**CLOSED or OPEN (or if no vacuum in the circuit)**	
		ET696:	RR* row swirl flap position	**CLOSED or OPEN (or if no vacuum in the circuit)**	
9	**Battery voltage**	**PR074:**	Battery voltage	**8.5 V < X < 15.8 V**	In the event of a fault, test the battery and carry out a fault finding procedure on the charging circuit.
10	**Sensor voltage**	**PR215:**	Sensor supply voltage no. 1	**5.0 V ± 0.1**	In the event of a fault, apply the interpretation of **DF011 Sensor supply voltage no.1, DF012 Sensor supply voltage no.2 and DF013 Sensor supply voltage no.3**.
		PR216:	Sensor supply voltage no. 2		
		PR635:	Sensor supply voltage no. 3		

FR*: Front
RR*: Rear

GETtheMANUALS.org

NOTES	Only carry out this conformity check after a **complete check** with the diagnostic tool. The values indicated in this conformity check are only given as examples. **Test conditions: engine stopped, ignition on.**

FUEL CIRCUIT

Order	Function	Parameter or Status Checked or Action		Display and Notes	Fault finding
1	**Engine speed**	**PR055:**	Engine speed	**0 rpm**	In the event of a fault, apply the interpretation of **DF005 Engine speed sensor circuit or DF195 Engine speed/camshaft sensor consistency**.
2	**Fuel temperature**	**PR063:**	Fuel temperature	**- 40˚C < X < 120˚C**	In the event of a fault, apply the interpretation of **DF098 Fuel temperature sensor circuit**.
3	**Fuel flow**	**PR017:**	Fuel flow	**- 30 ≤ X ≤ 0 mm3/st**	None.
4	**Pressure**	**PR008:**	Rail reference pressure	**0 bar**	In the event of a fault, apply the interpretation of fault **DF007 Rail pressure sensor circuit** or **Test 3 Low pressure circuit check**. Note: this fault finding applies to PR008, PR038 and PR213
		PR038:	Rail pressure	**0 bar** If the engine has just been stopped, wait a few seconds to obtain this value.	
		PR213:	Rail pressure loop difference	**0 bar**	

GETtheMANUALS.org

NOTES	Only carry out this conformity check after a **complete check** with the diagnostic tool. The values indicated in this conformity check are only given as examples. **Test conditions: engine stopped, ignition on.**

FUEL CIRCUIT (CONTINUED 1)

Order	Function	Parameter or Status Checked or Action	Display and Notes	Fault finding
5	**Battery voltage**	**PR074:** Battery voltage	**8.5 V < X < 15.8 V**	In the event of a fault, test the battery and carry out a fault finding procedure on the charging circuit.
6	**Sensor voltage**	**PR082:** Fuel temperature sensor voltage	**0 V < X < 5 V**	In the event of a fault, apply the interpretation of **DF098 Fuel temperature sensor circuit**.
		PR080: Rail pressure sensor voltage	**1.0 V ± 0.5**	In the event of a fault, apply the interpretation of **DF007 Rail pressure sensor circuit** or **Test 3 Low pressure circuit check**.

GETtheMANUALS.org

NOTES	Only carry out this conformity check after a **complete check** with the diagnostic tool. The values indicated in this conformity check are only given as examples. **Test conditions: engine stopped, ignition on.**

FUEL CIRCUIT (CONTINUED 2)

Order	Function	Parameter or Status Checked or Action	Display and Notes	Fault finding
7	**Fuel flow correction**	**PR364:** Cylinder no. 1 fuel flow correction	**0 µs**	If there is an inconsistency, carry out a check using **test 10 Incorrect injector operation**.
		PR405: Cylinder no. 2 fuel flow correction		
		PR406: Cylinder no. 3 fuel flow correction		
		PR365: Cylinder no. 4 fuel flow correction		
		PR407: Cylinder no. 5 fuel flow correction		
		PR408: Cylinder no. 6 fuel flow correction		

GETtheMANUALS.org

NOTES	Only carry out this conformity check after a **complete check** with the diagnostic tool. The values indicated in this conformity check are only given as examples. **Test conditions: engine stopped, ignition on.**

ANTI POLLUTION/OBD

Order	Function	Parameter or Status Checked or Action	Display and Notes	Fault finding
1	**Engine speed**	**PR055:** Engine speed	**0 rpm**	In the event of a fault, apply the interpretation of **DF005 Engine speed sensor circuit** or **DF195 Engine speed/camshaft sensor consistency**.
2	**EGR valve**	**PR220:** EGR valve OCR*	**0%**	In the event of a fault, apply the interpretation of **DF209 EGR valve position sensor circuit** or **DF272 EGR valve control circuit**.
		PR005: EGR valve opening setpoint	**0%**	In the event of a fault, apply the interpretation of **DF209 EGR valve position sensor circuit** or **DF272 EGR valve control circuit**.
3	**Air flow**	**PR132:** Air flow	**0 kg per hour**	In the event of a fault, apply the interpretation of **DF056 Air flow sensor circuit or** of **Test 5 Air flowmeter**.
4	**Sensor voltage**	**PR077:** EGR valve position sensor voltage	**0.7 V ± 0.5**	In the event of a fault, apply the interpretation of **DF209 EGR valve position sensor circuit** or **DF272 EGR valve control circuit**.
		PR225: Air flow sensor voltage	**1.0 V ± 0.5**	In the event of a fault, apply the interpretation of **DF056 Air flow sensor circuit** or **Test 5 Air flowmeter**.

*Opening cyclic ratio.

GETtheMANUALS.org

NOTES	Only carry out this conformity check after a **complete check** with the diagnostic tool. The values indicated in this conformity check are only given as examples. **Test conditions: engine stopped, ignition on.**

EMISSION CONTROL/OBD (CONTINUED 1)

Order	Function	Parameter or Status Checked or Action		Display and Notes	Fault finding
5	**Indicator lights**	**ET117:**	Overheating indicator light	**OFF except the OBD warning light: ON.** Warning light controlled by the engine injection computer: Controlled via the multiplex network.	In the event of a fault, apply the interpretation of **DF721 Engine overheating**.
		ET220:	Fault/preheating indicator light		In the event of a fault, apply the interpretation of status **ET220 Preheating/fault warning light** and check that there are no faults. If the fault is still present run fault finding on the instrument panel.
		ET460:	Coolant temperature warning light		In the event of a fault, apply the interpretation of **DF721 Engine overheating**.
6	**OBD fault**	**ET520:**	OBD warning light		In the event of a fault, apply the interpretation of status **ET520 OBD warning light** and check that there are no faults. If the fault is still present run fault finding on the instrument panel.
7	**Swirl flap**	**ET694:**	Swirl flap position setpoint	**CLOSED**	In the event of a fault, apply the interpretation of **DF951 Swirl flap position sensor circuit** or **DF952 Swirl flap circuit**.
		ET695:	FR* row swirl flap position	**CLOSED or OPEN (or if no vacuum in the circuit)**	
		ET696:	RR* row swirl flap position	**CLOSED or OPEN (or if no vacuum in the circuit)**	

FR*: Front
RR*: Rear

GETtheMANUALS.org

NOTES	Only carry out this conformity check after a **complete check** with the diagnostic tool. The values indicated in this conformity check are only given as examples. **Test conditions: engine stopped, ignition on.**

DRIVER PARAMETERS

Order	Function	Parameter or Status Checked or Action		Display and Notes	Fault finding
1	**Engine speed**	**PR055:**	Engine speed	**0 rpm**	In the event of a fault, apply the interpretation of **DF005 Engine speed sensor circuit or DF195 Engine speed/camshaft sensor consistency**.
2	**Accelerator pedal**	**PR030:**	Accelerator pedal position	**No load: 0%** **Full load: 100% <X < 139%**	In the event of a fault, apply the interpretation of **DF008 Pedal potentiometer circuit gang 1** or **DF009 Pedal potentiometer circuit gang 2**.
		PR147:	Pedal potentiometer voltage gang 1	**No load: PR147 = 0.75 V ± 0.1** **Full load: PR147 = 4.25 V ± 0.31**	
		PR148:	Pedal potentiometer voltage gang 2	**No load: PR148 = 0.37 V ± 0.1** **Full load: PR148 = 2.12 V ± 0.16**	
		PR318:	Pedal sensor supply gang 2	**5.0 V ± 0.1**	
		PR342:	Pedal sensor supply gang 1	**5.0 V ± 0.1**	
3	**Brake contact**	**ET704:**	Brake contact no.1	**ACTIVE**	In the event of a fault, apply the interpretation of status **ET704 Brake contact no.1 and ET705 Brake contact no.2**.
		ET705:	Brake contact no.2	**INACTIVE**	

GETtheMANUALS.org

NOTES	Only carry out this conformity check after a **complete check** with the diagnostic tool. The values indicated in this conformity check are only given as examples. **Test conditions: engine stopped, ignition on.**

IGNITION/PREHEATING

Order	Function	Parameter or Status Checked or Action		Display and Notes	Fault finding
1	**+ After ignition computer feed**	**ET001:**	+ After ignition computer feed	**PRESENT**	In the event of a fault, refer to the interpretation of **DF046 Battery voltage or DF151 Main relay circuit**.
2	**Engine speed**	**PR055:**	Engine speed	**0 rpm**	In the event of a fault, apply the interpretation of **DF005 Engine speed sensor circuit or DF195 Engine speed/ camshaft sensor consistency**.
3	**Temperature**	**PR311:**	Manifold air temperature	Check the values displayed by the sensors by consulting the **Glossary**.	In the event of a fault, apply the interpretation of **DF039 Air inlet temperature sensor circuit**.
		PR064:	Coolant temperature		In the event of a fault, apply the interpretation of **DF001 Coolant temperature sensor circuit**.
4	**Preheating**	**ET007:**	Pre-postheating control	**INACTIVE or ACTIVE** Depending on the coolant temperature and air temperature.	In the event of a fault, consult the interpretation of status **ET007 Preheating unit control**.
		ET115:	Preheating warning light	**OFF or ON** Depending on **ET007**.	In the event of a fault, consult the interpretation of status **ET115 Preheating warning light**.
5	**Battery voltage**	**PR074:**	Battery voltage	**8.5 V < X < 15.8 V**	In the event of a fault, test the battery and carry out a fault finding procedure on the charging circuit.
6	**Sensor voltage**	**PR081:**	Inlet temperature sensor voltage	**0 V < X < 5 V**	In the event of a fault, apply the interpretation of **DF039 Air inlet temperature sensor circuit** or **DF001 Coolant temperature sensor circuit**.
		PR084:	Coolant temperature sensor voltage	**0 V < X < 5 V**	

GETtheMANUALS.org

NOTES	Only carry out this conformity check after a **complete check** with the diagnostic tool. The values indicated in this conformity check are only given as examples. **Test conditions: engine stopped, ignition on.**

ENGINE COOLING

Order	Function	Parameter or Status Checked or Action		Display and Notes	Fault finding
1	**Temperature of sensors**	**PR064:**	Coolant temperature	Check the values displayed by the sensors by consulting the **Glossary**.	In the event of a fault, apply the interpretation of **DF001 Coolant temperature sensor circuit** or **DF058 Oil temperature sensor circuit**.
		PR066:	Oil temperature		
2	**Fan assembly**	**ET688:**	Fan assembly command 1	**INACTIVE or ACTIVE** depending on the engine temperature.	In the event of a fault, apply the interpretation of **DF948 Fan assembly command circuit 1**.
		ET689:	Fan assembly command 2		In the event of a fault, apply the interpretation of **DF949 Fan assembly command circuit 2**.
		ET690:	Fan assembly command 3		In the event of a fault, apply the interpretation of **DF950 Fan assembly command circuit 3**.
3	**Battery voltage**	**PR074:**	Battery voltage	**8.5 V < X < 15.8 V**	In the event of a fault, test the battery and carry out a fault finding procedure on the charging circuit.
4	**Sensor voltage**	**PR084:**	Coolant temperature sensor voltage	**0 V < X < 5 V**	In the event of a fault, apply the interpretation of **DF001 Coolant temperature sensor circuit**.
		PR085:	Oil temperature sensor voltage	**0 V < X < 5 V**	

GETtheMANUALS.org

NOTES	Only carry out this conformity check after a **complete check** with the diagnostic tool. The values indicated in this conformity check are only given as examples. **Test conditions: engine stopped, ignition on.**

COLD LOOP

Order	Function	Parameter or Status Checked or Action		Display and Notes	Fault finding
1	**Engine speed**	**PR055:**	Engine speed	**0 rpm**	In the event of a fault, apply the interpretation of **DF005 Engine speed sensor circuit or DF195 Engine speed/ camshaft sensor consistency**.
2	**Vehicle speed**	**PR089:**	Vehicle speed	**Gives the vehicle speed in mph (km/h). 0 mph (0 km/h)**	**Perform a fault finding procedure on the ABS computer.**
3	**Coolant temperature**	**PR064:**	Coolant temperature	Check the values displayed by the sensors by consulting the Glossary section.	In the event of a fault, apply the interpretation of **DF001 Coolant temperature sensor circuit**.
4	**Motor-driven fan assembly**	**ET688:**	Fan assembly command 1	**INACTIVE or ACTIVE** depending on the engine temperature.	In the event of a fault, apply the interpretation of **DF948 Fan assembly command circuit 1**.
		ET689:	Fan assembly command 2		In the event of a fault, apply the interpretation of **DF949 Fan assembly command circuit 2**.
		ET690:	Fan assembly command 3		In the event of a fault, apply the interpretation of **DF950 Fan assembly command circuit 3**.
5	**Sensor voltage**	**PR084:**	Coolant temperature sensor voltage	**0 V < X < 5 V**	In the event of a fault, apply the interpretation of **DF001 Coolant temperature sensor circuit**.

GETtheMANUALS.org

NOTES	Only carry out this conformity check after a **complete check** with the diagnostic tool. The values indicated in this conformity check are only given as examples. **Test conditions: engine stopped, ignition on.**

HEATING

Order	Function	Parameter or Status Checked or Action	Display and Notes	Fault finding
1	**Engine speed**	**PR055:** Engine speed	**0 rpm**	In the event of a fault, apply the interpretation of **DF005 Engine speed sensor circuit or DF195 Engine speed/camshaft sensor consistency**.
2	**Coolant temperature**	**PR064:** Coolant temperature	Check the values displayed by the sensors (see **Glossary**).	In the event of a fault, apply the interpretation of **DF001 Coolant temperature sensor circuit**.
3	**Thermoplungers**	**ET205:** Thermoplunger no. 1 relay control	**INACTIVE or ACTIVE** Depending on the coolant temperature, air temperature and battery voltage.	In the event of a fault, apply the interpretation of status **DF032 Thermoplunger 1 relay control circuit**.
		ET206: Thermoplunger no. 2 relay control	**INACTIVE or ACTIVE** Depending on the coolant temperature, air temperature and battery voltage.	In the event of a fault, apply the interpretation of status **DF033 Thermoplunger 2 relay control circuit**.
		ET207: Thermoplunger no. 3 relay control	**INACTIVE or ACTIVE** Depending on the coolant temperature, air temperature and battery voltage.	In the event of a fault, refer to the interpretation of **DF034 Thermoplunger 3 relay control circuit**.
4	**Sensor voltage**	**PR084:** Coolant temperature sensor voltage	**0 V < X < 5 V**	In the event of a fault, apply the interpretation of **DF001 Coolant temperature sensor circuit**.

GETtheMANUALS.org

NOTES	Only carry out this conformity check after a **complete check** with the diagnostic tool. The values indicated in this conformity check are only given as examples. **Test conditions: engine stopped, ignition on.**

CRUISE CONTROL/SPEED LIMITER

Order	Function	Parameter or Status Checked or Action		Display and Notes	Fault finding
1	**Vehicle speed**	**PR089:**	Vehicle speed	**Gives the vehicle speed in mph (km/h). 0 mph (0 km/h)**	**Perform a fault finding procedure on the ABS computer.**
2	**Cruise control/ Speed limiter**	**ET042:**	Cruise control/ Speed limiter	**NOT DETECTED INACTIVE SPEED LIMITER CRUISE CONTROL**	In the event of a fault, apply the interpretation of **ET042 Cruise control/ Speed limiter**.
		ET703:	Cruise control/ speed limiter buttons	**NOT DETECTED INACTIVE SUSPEND RESUME DECREASE INCREASE**	In the event of a fault, apply the interpretation of **ET703 Cruise control/ speed limiter buttons**.
		ET557:	Cruise control/ speed limiter deactivation by function Note: Cruise control can only be activated for a speed V > 18 mph (30 km/h)	**INACTIVE STATUS 2:** Injection computer monitoring **STATUS 3:** Vehicle speed monitoring **STATUS 4:** Cruise control or speed limiter monitoring **STATUS 5:** Vehicle speed not refreshed	In the event of a fault, apply the interpretation of **ET557 Deactivation by cruise control/speed limiter function**. **IMPORTANT** Certain deactivations are stored; to reinitialise this status use **RZ007 Fault memory**.
		ET556:	Driver deactivation of the cruise control/ speed limiter Note: Cruise control can only be activated for a speed V > 18 mph (30 km/h)	**INACTIVE STATUS 1:** Brake pedal depressed **STATUS 2:** Clutch pedal depressed **STATUS 3:** Suspend button pressed **STATUS 4:** Traction control request **STATUS 5:** Gear lever in neutral (manual gearbox) or neutral (automatic transmission) **STATUS 6:** Inconsistency between the request and the vehicle speed	In the event of a fault, apply the interpretation of **ET556 Driver deactivation of the cruise control/speed limiter**. **IMPORTANT** Certain deactivations are stored; to reinitialise this status use **RZ007 Fault memory**.

GETtheMANUALS.org

NOTES	Only carry out this conformity check after a **complete check** with the diagnostic tool. The values indicated in this conformity check are only given as examples. **Test conditions: engine stopped, ignition on.**

CRUISE CONTROL/SPEED LIMITER (CONTINUED 1)

Order	Function	Parameter or Status Checked or Action		Display and Notes	Fault finding
3	**Cruise control/ Speed limiter**	**PR178:**	Cruise control switch voltage	If **ET042** is **INACTIVE**, **PR178 = 5 V ± 0.1**. If **ET042** is **INCREASE**, **PR178 = 2.4 V ± 0.1**. If **ET042** is **DECREASE**, **PR178 = 1.3 V ± 0.1**. If **ET042** is **SUSPEND**, **PR178 = 0.1 V ± 0.1**. If **ET042** is **RESUME**, **PR178 = 3.75 V ± 0.1**.	In the event of a fault, apply the interpretation of **ET042 Cruise control/Speed limiter**.
		PR130:	Cruise control setpoint	**0 mph (0 km/h)**	None.
4	**Brake contact**	**ET704:**	Brake contact no.1	**ACTIVE**	In the event of a fault, apply the interpretation of status **ET704 Brake contact no.1 and ET705 Brake contact no.2**.
		ET705:	Brake contact no.2	**INACTIVE**	
5	**Accelerator pedal**	**PR030:**	Accelerator pedal position	**No load: 0%** **Full load: 100% <X < 139%**	In the event of a fault, apply the interpretation of **DF008 Pedal potentiometer circuit gang 1** or **DF009 Pedal potentiometer circuit gang 2**.

GETtheMANUALS.org

NOTES	Only carry out this conformity check after a **complete check** with the diagnostic tool. The values indicated in this conformity check are only given as examples. **Test conditions: engine stopped, ignition on.**

STARTING

Order	Function	Parameter or Status Checked or Action		Display and Notes	Fault finding
1	**Computer after ignition feed**	**ET001:**	+ After ignition computer feed	**PRESENT**	In the event of a fault, refer to the interpretation of **DF046 Battery voltage or DF151 Main relay circuit**.
2	**Engine immobiliser**	**ET003:**	Engine immobiliser	**INACTIVE**	In the event of a fault, run a multiplex network test using the **diagnostic tool** then if the test is OK, test the UCH.
		ET341:	Immobiliser code programmed	**YES**	If **NO**, run command **SC002 Program injection immobiliser code** via the UCH computer.
3	**Battery voltage**	**PR074:**	Battery voltage	**8.5 V < X < 15.8 V**	In the event of a fault, test the battery and carry out a fault finding procedure on the charging circuit.
4	**Sensor voltage**	**PR215:**	Sensor supply voltage no. 1	**5.0 V ± 0.1**	In the event of a fault, apply the interpretation of **DF011 Sensor supply voltage no.1, DF012 Sensor supply voltage no.2** and **DF013 Sensor supply voltage no.3**.
		PR216:	Sensor supply voltage no. 2		
		PR635:	Sensor supply voltage no. 3		
5	**Start button**	**ET691:**	Start button	**INACTIVE**	In the event of a fault, apply the interpretation of fault **DF958 Start button circuit**.

GETtheMANUALS.org

NOTES	Only carry out this conformity check after a **complete check** with the diagnostic tool. The values indicated in this conformity check are only given as examples. **Test conditions: engine stopped, ignition on.**

PROTECTION

Order	Function	Parameter or Status Checked or Action	Display and Notes	Fault finding
1	**Impact detected**	**ET077:** Impact detected	**NO**	If **YES**, switch off the ignition for **40 seconds**, then switch it back on to start the engine. Clear the faults.
2	**Engine immobiliser**	**ET341:** Immobiliser code programmed	**YES**	If **NO**, run command **SC002 Program injection immobiliser code** via the UCH computer.
		ET003: Engine immobiliser	**INACTIVE**	In the event of a fault, run a multiplex network test using the **diagnostic tool** then if the test is OK, test the UCH.

GETtheMANUALS.org

NOTES	Only carry out this conformity check after a complete check with the diagnostic tool. The values indicated in this conformity check are only given as examples. **Operation conditions: engine warm at idle speed, coolant temperature > 80˚C, without any electrical consumers and battery correct.**

MAIN SCREEN

Order	Function	Parameter or Status Checked or Action		Display and Notes	Fault finding
1	**Computer after ignition feed**	**ET001:**	+ After ignition computer feed	**PRESENT**	In the event of a fault, refer to the interpretation of **DF046 Battery voltage or DF151 Main relay circuit**.
2	**Engine speed**	**PR055:**	Engine speed	**700 rpm ± 50**	In the event of a fault, apply the interpretation of **DF005 Engine speed sensor circuit or DF195 Engine speed/camshaft sensor consistency**.
3	**Vehicle speed**	**PR089:**	Vehicle speed	**Gives the vehicle speed in mph (km/h). 0 mph (0 km/h)**	**Perform a fault finding procedure on the ABS computer.**
4	**Pressure**	**PR038:**	Rail pressure	**300 bar ± 30**	In the event of a fault, apply the interpretation of fault **DF007 Rail pressure sensor circuit or DF946 Rail pressure controller or DF947 Rail pressure limiter**.
		PR041:	Turbocharging pressure	**PR041 = PR035 ± 50 mbar**	In the event of a fault, apply the interpretation of **DF954 Turbocharger controller circuit** or **DF569 Turbocharging circuit or DF957 Too much air in inlet circuit or DF956 Lack of air in inlet circuit**.

GETtheMANUALS.org

NOTES	Only carry out this conformity check after a complete check with the diagnostic tool. The values indicated in this conformity check are only given as examples. **Operation conditions: engine warm at idle speed, coolant temperature > 80˚C, without any electrical consumers and battery correct.**

MAIN SCREEN (CONTINUED)

Order	Function	Parameter or Status Checked or Action		Display and Notes	Fault finding
5	**Air temperature**	**PR730:**	Air flow sensor temperature	Check the values displayed by the sensors by consulting the **Glossary**.	In the event of a fault, apply the interpretation of **DF039 Air inlet temperature sensor circuit and DF002 Air temperature sensor circuit**.
		PR311:	Manifold air temperature		
6	**Fuel temperature**	**PR063:**	Fuel temperature	**- 40˚C < X < 120˚C**	In the event of a fault, apply the interpretation of **DF098 Fuel temperature sensor circuit**.
7	**Temperature**	**PR064:**	Coolant temperature	Check the values displayed by the sensors by consulting the **Glossary**.	In the event of a fault, apply the interpretation of **DF001 Coolant temperature sensor circuit**.
		PR066:	Oil temperature		**In the event of a fault apply the interpretation for DF058 Oil temperature sensor circuit.**
8	**Battery voltage**	**PR074:**	Battery voltage	**13 V < X < 15 V**	In the event of a fault, test the battery and carry out a fault finding procedure on the charging circuit.
9	**Sensor feed voltage**	**PR215:**	Sensor supply voltage no. 1	**5.0 V ± 0.1**	In the event of a fault, apply the interpretation of **DF011 Sensor supply voltage no.1, DF012 Sensor supply voltage no.2** and **DF013 Sensor supply voltage no.3**.
		PR216:	Sensor supply voltage no. 2		
		PR635:	Sensor supply voltage no. 3		
10	**Injection → automatic transmission connection**	**ET285:**	Injection → automatic transmission connection	**PRESENT**	In the event of a fault, apply the interpretation of **DF333 Injection → automatic transmission connection**.

GETtheMANUALS.org

NOTES	Only carry out this conformity check after a complete check with the diagnostic tool. The values indicated in this conformity check are only given as examples. **Operation conditions: engine warm at idle speed, coolant temperature > 80˚C, without any electrical consumers and battery correct.**

AIR CIRCUIT (TURBO/INLET)

Order	Function	Parameter or Status Checked or Action		Display and Notes	Fault finding
1	**Engine speed**	**PR055:**	Engine speed	**700 rpm ± 50**	In the event of a fault, apply the interpretation of **DF005 Engine speed sensor circuit or DF195 Engine speed/camshaft sensor consistency**.
2	**Air temperature**	**PR730:**	Air flow sensor temperature	**- 40˚C < X < 120˚C**	In the event of a fault, apply the interpretation of **DF039 Air inlet temperature sensor circuit and DF002 Air temperature sensor circuit**.
		PR061:	Manifold air temperature		
3	**Pressure**	**PR035:**	Atmospheric pressure	**950 < X < 1030 mbar** (depending on altitude)	In the event of a fault, apply the interpretation of fault **DF003 Atmospheric pressure sensor circuit**.
		PR041:	Turbocharging pressure	**PR041 = PR035 ± 50 mbar**	In the event of a fault, apply the interpretation of fault **DF954 Turbocharger controller circuit** or **DF569 Turbocharging circuit or DF957 Too much air in inlet circuit or DF956 Lack of air in inlet circuit or Test 4 Turbocharging and air inlet circuit check or Test 7 Variable geometry turbocharger command**.
4	**Turbocharger**	**PR766:**	Turbocharger position setpoint	**1.5% ± 2**	
		PR767:	Turbocharger position		

GETtheMANUALS.org

NOTES	Only carry out this conformity check after a complete check with the diagnostic tool. The values indicated in this conformity check are only given as examples. **Operation conditions: engine warm at idle speed, coolant temperature > 80˚C, without any electrical consumers and battery correct.**

AIR CIRCUIT (TURBO/INLET) (CONTINUED 1)

Order	Function	Parameter or Status Checked or Action		Display and Notes	Fault finding
5	**EGR valve opening cyclic ratio**	**PR220:**	EGR valve OCR*	**45% ± 10**	In the event of a fault, apply the interpretation of **DF209 EGR valve position sensor circuit** or **DF272 EGR valve control circuit**.
6	**Air flow**	**PR132:**	Air flow	**23 kg/h ± 3**	In the event of a fault, apply the interpretation of **DF056 Air flow sensor circuit or** of **Test 5 Air flowmeter**.
7	**Sensor voltage**	**PR081:**	Inlet temperature sensor voltage	**0.22 V <x <4.9 V**	In the event of a fault, apply the interpretation of **DF039 Air inlet temperature sensor circuit** and **DF002 Air temperature sensor circuit**.
		PR083:	Air temperature sensor voltage	**0.22 V <x <4.9 V**	
		PR079:	Atmospheric pressure sensor voltage	**3.65 V ± 1**	In the event of a fault, apply the interpretation of **DF003 Atmospheric pressure sensor circuit**.
		PR224:	Turbocharging pressure sensor voltage	**1.95 V ± 0.05 at + 20˚C**	In the event of a fault, apply the interpretation of **DF954 Turbocharger controller circuit or DF569 Turbocharging circuit or Test 4 Turbocharging and air inlet circuit check or Test 7 Variable geometry turbocharger command**.
		PR225:	Air flow sensor voltage	**0 V < X < 5 V**	In the event of a fault, apply the interpretation of **DF056 Air flow sensor circuit or** of **Test 5 Air flowmeter**.

*Opening cyclic ratio.

GETtheMANUALS.org

NOTES	Only carry out this conformity check after a complete check with the diagnostic tool. The values indicated in this conformity check are only given as examples. **Operation conditions: engine warm at idle speed, coolant temperature > 80˚C, without any electrical consumers and battery correct.**

AIR CIRCUIT (TURBO/INLET) (CONTINUED 2)

Order	Function	Parameter or Status Checked or Action		Display and Notes	Fault finding
8	**Swirl flap**	**ET694:**	Swirl flap position setpoint	**CLOSED**	In the event of a fault, apply the interpretation of **DF951 Swirl flap position sensor circuit** or **DF952 Swirl flap circuit**.
		ET695:	FR* row swirl flap position	**CLOSED**	
		ET696:	RR* row swirl flap position	**CLOSED**	
9	**Battery voltage**	**PR074:**	Battery voltage	**13 V < X < 15 V**	In the event of a fault, test the battery and carry out a fault finding procedure on the charging circuit.
10	**Sensor voltage**	**PR215:**	Sensor supply voltage no. 1	**5.0 V ± 0.1**	In the event of a fault, apply the interpretation of **DF011 Sensor supply voltage no.1**, or **DF012 Sensor supply voltage no.2**, or **DF013 Sensor supply voltage no.3**.
		PR216:	Sensor supply voltage no. 2		
		PR635:	Sensor supply voltage no. 3		

FR*: Front
RR*: Rear

GETtheMANUALS.org

NOTES	Only carry out this conformity check after a complete check with the diagnostic tool. The values indicated in this conformity check are only given as examples. **Operation conditions: engine warm at idle speed, coolant temperature > 80˚C, without any electrical consumers and battery correct.**

FUEL CIRCUIT

Order	Function	Parameter or Status Checked or Action		Display and Notes	Fault finding
1	**Engine speed**	**PR055:**	Engine speed	**700 rpm ± 50**	In the event of a fault, apply the interpretation of **DF005 Engine speed sensor circuit or DF195 Engine speed/camshaft sensor consistency**.
2	**Fuel temperature**	**PR063:**	Fuel temperature	**- 40˚C < X < 120˚C**	In the event of a fault, apply the interpretation of **DF098 Fuel temperature sensor circuit**.
3	**Fuel flow**	**PR017:**	Fuel flow	**7.5 mm3/st ± 3**	None.
4	**Pressure**	**PR008:**	Rail reference pressure	**300 bar ± 30**	In the event of a fault, apply the interpretation of fault **DF007 Rail pressure sensor circuit** or **Test 3 Low pressure circuit check**.
		PR038:	Rail pressure	**300 bar ± 30**	
		PR213:	Rail pressure loop difference	**300 bar ± 30**	

GETtheMANUALS.org

NOTES	Only carry out this conformity check after a **complete check** with the diagnostic tool. The values indicated in this conformity check are only given as examples. **Test conditions: engine stopped, ignition on.**

FUEL CIRCUIT (CONTINUED 1)

Order	Function	Parameter or Status Checked or Action	Display and Notes	Fault finding
5	**Battery voltage**	**PR074:** Battery voltage	**13 V < X < 15 V**	In the event of a fault, test the battery and carry out a fault finding procedure on the charging circuit.
6	**Sensor voltage**	**PR082:** Fuel temperature sensor voltage	**0 V < X < 5 V**	In the event of a fault, apply the interpretation of **DF098 Fuel temperature sensor circuit**.
		PR080: Rail pressure sensor voltage	**1.5 V ± 0.1**	In the event of a fault, apply the interpretation of fault **DF007 Rail pressure sensor circuit** or **Test 3 Low pressure circuit check**.

GETtheMANUALS.org

NOTES	Only carry out this conformity check after a complete check with the diagnostic tool. The values indicated in this conformity check are only given as examples. **Operation conditions: engine warm at idle speed, coolant temperature > 80˚C, without any electrical consumers and battery correct.**

FUEL CIRCUIT (CONTINUED 2)

Order	Function	Parameter or Status Checked or Action	Display and Notes	Fault finding
7	**Fuel flow correction**	**PR364:** Cylinder no. 1 fuel flow correction	**0 µs ± 300**	If there is an inconsistency, carry out a check using **test 10 Incorrect injector operation**.
		PR405: Cylinder no. 2 fuel flow correction		
		PR406: Cylinder no. 3 fuel flow correction		
		PR365: Cylinder no. 4 fuel flow correction		
		PR407: Cylinder no. 5 fuel flow correction		
		PR408: Cylinder no. 6 fuel flow correction		

GETtheMANUALS.org

NOTES	Only carry out this conformity check after a complete check with the diagnostic tool. The values indicated in this conformity check are only given as examples. **Operation conditions: engine warm at idle speed, coolant temperature > 80˚C, without any electrical consumers and battery correct.**

ANTI POLLUTION/OBD

Order	Function	Parameter or Status Checked or Action		Display and Notes	Fault finding
1	**Engine speed**	**PR055:**	Engine speed	**700 rpm ± 50**	In the event of a fault, apply the interpretation of **DF005 Engine speed sensor circuit or DF195 Engine speed/camshaft sensor consistency**.
2	**EGR valve**	**PR220:**	EGR valve OCR*	**45% ± 5**	In the event of a fault, apply the interpretation of **DF209 EGR valve position sensor circuit** or **DF272 EGR valve control circuit**.
		PR005:	EGR valve opening setpoint	**45% ± 5**	In the event of a fault, apply the interpretation of **DF209 EGR valve position sensor circuit** or **DF272 EGR valve control circuit**.
3	**Air flow**	**PR132:**	Air flow	**23 kg/h ± 3**	In the event of a fault, apply the interpretation of **DF056 Air flow sensor circuit or Test 5 Air flow meter**.
4	**Sensor voltage**	**PR077:**	EGR valve position sensor voltage	**2.2 V ± 0.5**	In the event of a fault, apply the interpretation of **DF209 EGR valve position sensor circuit** or **DF272 EGR valve control circuit**.
		PR225:	Air flow sensor voltage	**0 V < X < 5 V**	In the event of a fault, apply the interpretation of **DF056 Air flow sensor circuit or Test 5 Air flow meter**.

*Opening cyclic ratio.

GETtheMANUALS.org

NOTES	Only carry out this conformity check after a complete check with the diagnostic tool. The values indicated in this conformity check are only given as examples. **Operation conditions: engine warm at idle speed, coolant temperature > 80˚C, without any electrical consumers and battery correct.**

EMISSION CONTROL/OBD (CONTINUED 1)

Order	Function	Parameter or Status Checked or Action		Display and Notes	Fault finding
5	**Indicator lights**	**ET117:**	Overheating indicator light	**OFF** **Warning light controlled by the engine injection computer: Controlled via the multiplex network.**	In the event of a fault, apply the interpretation of **DF721 Engine overheating**.
		ET220:	Fault/preheating indicator light		In the event of a fault, apply the interpretation of status **ET220 Fault/preheating warning light** and check that there are no faults. If the fault is still present run fault finding on the instrument panel.
		ET460:	Coolant temperature warning light		In the event of a fault, apply the interpretation of **DF721 Engine overheating**.
6	**OBD fault**	**ET520:**	OBD warning light		In the event of a fault, apply the interpretation of status **ET520 OBD warning light** and check that there are no faults. If the fault is still present run fault finding on the instrument panel.
7	**Swirl flap**	**ET694:**	Swirl flap position setpoint	**CLOSED**	In the event of a fault, apply the interpretation of **DF951 Swirl flap position sensor circuit** or **DF952 Swirl flap circuit**.
		ET695:	FR* row swirl flap position	**CLOSED**	
		ET696:	RR* row swirl flap position	**CLOSED**	

FR*: Front
RR*: Rear

GETtheMANUALS.org

NOTES	Only carry out this conformity check after a complete check with the diagnostic tool. The values indicated in this conformity check are only given as examples. **Operation conditions: engine warm at idle speed, coolant temperature > 80˚C, without any electrical consumers and battery correct.**

DRIVER PARAMETERS

Order	Function	Parameter or Status Checked or Action		Display and Notes	Fault finding
1	**Engine speed**	**PR055:**	Engine speed	**700 rpm ± 50**	In the event of a fault, apply the interpretation of **DF005 Engine speed sensor circuit or DF195 Engine speed/camshaft sensor consistency**.
2	**Accelerator pedal**	**PR030:**	Accelerator pedal position	**0%**	In the event of a fault, apply the interpretation of **DF008 Pedal potentiometer circuit gang 1** or **DF009 Pedal potentiometer circuit gang 2**.
		PR147:	Pedal potentiometer voltage gang 1	**No load: PR147 = 0.75 V ± 0.1**	
		PR148:	Pedal potentiometer voltage gang 2	**No load: PR148 = 0.37 V ± 0.1**	
		PR318:	Pedal sensor supply gang 2	**5.0 V ± 0.1**	
		PR342:	Pedal sensor supply gang 1	**5.0 V ± 0.1**	
3	**Brake contact**	**ET704:**	Brake contact no.1	**ACTIVE**	In the event of a fault, apply the interpretation of statuses **ET704 Brake contact no.1 and ET705 Brake contact no.2**.
		ET705:	Brake contact no.2	**INACTIVE**	

GETtheMANUALS.org

NOTES	Only carry out this conformity check after a complete check with the diagnostic tool. The values indicated in this conformity check are only given as examples. **Operation conditions: engine warm at idle speed, coolant temperature > 80˚C, without any electrical consumers and battery correct.**

IGNITION/PREHEATING

Order	Function	Parameter or Status Checked or Action		Display and Notes	Fault finding
1	**Computer after ignition feed**	**ET001:**	+ After ignition computer feed	**PRESENT**	In the event of a fault, refer to the interpretation of **DF046 Battery voltage or DF151 Main relay circuit**.
2	**Engine speed**	**PR055:**	Engine speed	**700 rpm ± 50**	In the event of a fault, apply the interpretation of **DF005 Engine speed sensor circuit or DF195 Engine speed/ camshaft sensor consistency**.
3	**Temperature**	**PR311:**	Manifold air temperature	Check the values displayed by the sensors by consulting the **Glossary**.	In the event of a fault, apply the interpretation of **DF001 Coolant temperature sensor circuit**.
		PR064:	Coolant temperature		In the event of a fault, apply the interpretation of **DF039 Air inlet temperature sensor circuit** and **DF001 Coolant temperature sensor circuit**.
4	**Preheating**	**ET007:**	Pre-postheating control	**INACTIVE**	In the event of a fault, consult the interpretation of status **ET007 Preheating unit control**.
		ET115:	Preheating warning light	**OFF**	In the event of a fault, consult the interpretation of status **ET115 Preheating warning light**.
5	**Battery voltage**	**PR074:**	Battery voltage	**13 V < X < 15 V**	In the event of a fault, test the battery and carry out a fault finding procedure on the charging circuit.
6	**Sensor voltage**	**PR081:**	Inlet temperature sensor voltage	**0 V < X < 5 V**	In the event of a fault, apply the interpretation of **DF039 Air inlet temperature sensor circuit**and **DF001 Coolant temperature sensor circuit**.
		PR084:	Coolant temperature sensor voltage	**0 V < X < 5 V**	

GETtheMANUALS.org

NOTES	Only carry out this conformity check after a complete check with the diagnostic tool. The values indicated in this conformity check are only given as examples. **Operation conditions: engine warm at idle speed, coolant temperature > 80˚C, without any electrical consumers and battery correct.**

ENGINE COOLING

Order	Function	Parameter or Status Checked or Action		Display and Notes	Fault finding
1	**Temperature of sensors**	**PR064:**	Coolant temperature	Check the values displayed by the sensors by consulting the **Glossary**.	In the event of a fault, apply the interpretation of **DF001 Coolant temperature sensor circuit** or **DF058 Oil temperature sensor circuit**.
		PR066:	Oil temperature		
2	**Fan assembly**	**ET688:**	Fan assembly command 1	**INACTIVE or ACTIVE** depending on the engine temperature.	In the event of a fault, apply the interpretation of **DF948 Fan assembly command circuit 1**.
		ET689:	Fan assembly command 2		In the event of a fault, apply the interpretation of **DF949 Fan assembly command circuit 2**.
		ET690:	Fan assembly command 3		In the event of a fault, apply the interpretation of **DF950 Fan assembly command circuit 3**.
3	**Battery voltage**	**PR074:**	Battery voltage	**13 V <x <15.8 V**	In the event of a fault, test the battery and carry out a fault finding procedure on the charging circuit.
4	**Sensor voltage**	**PR084:**	Coolant temperature sensor voltage	**0 V < X < 5 V**	In the event of a fault, apply the interpretation of **DF001 Coolant temperature sensor circuit** or **DF058 Oil temperature sensor circuit**.
		PR085:	Oil temperature sensor voltage	**0 V < X < 5 V**	

GETtheMANUALS.org

NOTES	Only check conformity after a complete check using the diagnostic tool. The values indicated in this conformity check are given for guidance purposes only. **Operation conditions: engine warm at idle speed, coolant temperature > 80 °C, without any electrical consumers and battery correct.**

COLD LOOP

Order	Function	Parameter or Status checked or Action		Display and Notes	Fault finding
1	**Engine speed**	**PR055:**	Engine speed	**700 rpm ± 50**	In the event of a fault, apply the interpretation of **DF005 Engine speed sensor circuit or DF195 Camshaft sensor/engine speed consistency**.
2	**Vehicle speed**	**PR089:**	Vehicle speed	**Gives the vehicle speed in mph (km/h). 0 mph**	**Carry out a fault finding procedure on the ABS computer.**
3	**Coolant temperature**	**PR064:**	Coolant temperature	Check the values displayed by the sensors by referring to the **Glossary** section.	If there is a fault use the interpretation for **DF001 Coolant temperature sensor circuit**.
4	**Fan**	**ET688:**	GMV control circuit 1	**INACTIVE or ACTIVE** depending on the engine coolant temperature.	In the event of a fault, apply the interpretation of **DF948 GMV control circuit 1**.
		ET689:	GMV control circuit 2		In the event of a fault, apply the interpretation of **DF949 GMV control circuit 2**.
		ET690:	GMV control circuit 3		In the event of a fault, apply the interpretation of **DF950 GMV control circuit 3**.
5	**Sensor voltage**	**PR084:**	Coolant temperature sensor voltage	**0 V < X < 5 V**	If there is a fault use the interpretation for **DF001 Coolant temperature sensor circuit**.

GETtheMANUALS.org

NOTES	Only check conformity after a complete check using the diagnostic tool. The values indicated in this conformity check are given for guidance purposes only. **Operation conditions: engine warm at idle speed, coolant temperature > 80 °C, without any electrical consumers and battery correct.**

HEATING

Order	Function	Parameter or Status checked or Action		Display and Notes	Fault finding
1	**Engine speed**	**PR055:**	Engine speed	**700 rpm ± 50**	In the event of a fault, apply the interpretation of **DF005 Engine speed sensor circuit or DF195 Camshaft sensor/engine speed consistency**.
2	**Coolant temperature**	**PR064:**	Coolant temperature	Check the values displayed by the sensors by referring to the "Glossary" section.	If there is a fault use the interpretation for **DF001 Coolant temperature sensor circuit**.
3	**Heating elements**	**ET205:**	Heating element no. 1 relay control	**INACTIVE**	In the event of a fault, apply the interpretation of status **DF032 Heating element 1 relay control circuit**.
		ET206:	Heating element no. 2 relay control	**INACTIVE**	In the event of a fault, apply the interpretation of status **DF033 Heating element 2 relay control circuit**.
		ET207:	Heating element no. 3 relay control	**INACTIVE**	In the event of a fault, apply the interpretation of status **DF034 Heating element 3 relay control circuit**.
4	**Sensor voltage**	**PR084:**	Coolant temperature sensor voltage	**0 V < X < 5 V**	If there is a fault use the interpretation for **DF001 Coolant temperature sensor circuit**.

GETtheMANUALS.org

NOTES	Only check conformity after a complete check using the diagnostic tool. The values indicated in this conformity check are given for guidance purposes only. **Operation conditions: engine warm at idle speed, coolant temperature > 80 °C, without any electrical consumers and battery correct.**

CRUISE CONTROL/SPEED LIMITER

Order	Function	Parameter or Status checked or Action		Display and Notes	Fault finding
1	**Vehicle speed**	**PR089:**	Vehicle speed	**Gives the vehicle speed in mph (km/h).** **0 mph**	**Carry out a fault finding procedure on the ABS computer.**
2	**Cruise control/ Speed limiter**	**ET042:**	Cruise control/ speed limiter	**NOT DETECTED** **INACTIVE** **LIMITER CONTROL**	If there is a fault, use the interpretation for **ET042 Cruise control/Speed limiter**.
		ET703:	Cruise control/ speed limiter buttons	**NOT DETECTED** **INACTIVE** **SUSPEND RESUME** **DECREASE** **INCREASE**	In the event of a fault, apply the interpretation of status **ET703 Cruise control/speed limiter button**.
		ET557:	Deactivation by cruise control/ speed limiter function Note: Cruise control can only be activated for a speed V > 18 mph (30 km/h)	**INACTIVE** **STATUS 2:** Monitoring by injection computer **STATUS 3:** Vehicle speed monitoring **STATUS 4:** Cruise control or speed limiter monitoring **STATUS 5:** Vehicle speed not refreshed	In the event of a fault, apply the interpretation of **ET557 Deactivation by cruise control/speed limiter function**. **IMPORTANT** Certain deactivations are stored; to reinitialise this status use **RZ007 Fault memory**.
		ET556:	Driver deactivation of the cruise control/ speed limiter Note: Cruise control can only be activated for a speed V > 18 mph (30 km/h)	**INACTIVE** **STATUS 1:** Brake pedal depressed **STATUS 2:** Clutch pedal depressed **STATUS 3:** Cancel button pressed **STATUS 4:** Traction control request **STATUS 5:** Gear lever in neutral (manual gearbox) or neutral (automatic transmission) **STATUS 6:** Inconsistency between request and vehicle speed	In the event of a fault, apply the interpretation of **ET556 Driver deactivation of the cruise control/speed limiter**. **IMPORTANT** Certain deactivations are stored; to reinitialise this status use **RZ007 Fault memory**.

GETtheMANUALS.org

NOTES	Only check conformity after a complete check using the diagnostic tool. The values indicated in this conformity check are given for guidance purposes only. **Operation conditions: engine warm at idle speed, coolant temperature > 80 °C, without any electrical consumers and battery correct.**

CRUISE CONTROL/SPEED LIMITER (CONTINUED 1)

Order	Function	Parameter or Status checked or Action		Display and Notes	Fault finding
3	**Cruise control/ Speed limiter**	**PR178:**	Cruise control switch voltage	If **ET042** is **INACTIVE** **PR178 = 5 V ± 0.1**. If **ET042** is **INCREASE**, **PR178 = 2.4 V ± 0.1**. If **ET042** is **DECREASE**, **PR178 = 1.3 V ± 0.1**. If **ET042** is **SUSPEND**, **PR178 = 0.1 V ± 0.1**. If **ET042** is **RESUME**, **PR178 = 3.75 V ± 0.1**.	In the event of a fault, apply the interpretation of **ET042 Cruise control/Speed limiter**.
		PR130:	Cruise control setpoint	**0 mph**	None.
4	**Brake contact**	**ET704:**	Brake contact no. 1	**ACTIVE**	In the event of a fault, apply the interpretation of statuses **ET704 Brake contact no.1 and ET705 Brake contact no. 2**.
		ET705:	Brake contact no. 2	**INACTIVE**	
5	**Accelerator pedal**	**PR030:**	Accelerator pedal position	**0%**	In the event of a fault, apply the interpretation of **DF008 Pedal potentiometer ganged circuit 1** or **DF009 Pedal potentiometer ganged circuit 2**.

GETtheMANUALS.org

NOTES	Only check conformity after a complete check using the diagnostic tool. The values indicated in this conformity check are given for guidance purposes only. **Operation conditions: engine warm at idle speed, coolant temperature > 80 °C, without any electrical consumers and battery correct.**

STARTING

Order	Function	Parameter or Status checked or Action		Display and Notes	Fault finding
1	**Computer after ignition feed**	**ET001:**	+ After ignition computer feed	**PRESENT**	In the event of a fault, apply the interpretation of **DF046 Battery voltage or DF151 Main relay circuit**.
2	**Engine immobiliser**	**ET003:**	Engine immobiliser	**INACTIVE**	In the event of a fault, run a multiplex network test using the **diagnostic tool**, then if the test is in order, test the UCH.
3		**ET341:**	Immobiliser code programmed	**YES**	If **NO**, run command **SC002 Program injection immobiliser code** via the UCH computer.
4	**Battery voltage**	**PR074:**	Battery voltage	**13 V < X < 15 V**	In the event of a fault, test the battery and carry out a fault finding procedure on the charging circuit.
5	**Sensor voltage**	**PR215:**	Sensor supply voltage no. 1	**5.0 V ± 0.1**	In the event of a fault, apply the interpretation of **DF011 Sensor feed voltage no. 1, DF012 Sensor feed voltage no. 2** and **DF013 Sensor feed voltage no. 3**.
		PR216:	Sensor supply voltage no. 2		
		PR635:	Sensor supply voltage no. 3		
6	**Start button**	**ET691:**	Start button	**INACTIVE**	In the event of a fault, apply interpretation of fault **DF958 Start button circuit**.

GETtheMANUALS.org

NOTES	Only check conformity after a complete check using the diagnostic tool. The values indicated in this conformity check are given for guidance purposes only. **Operation conditions: engine warm at idle speed, coolant temperature > 80 °C, without any electrical consumers and battery correct.**

PROTECTION

Order	Function	Parameter or Status checked or Action	Display and Notes	Fault finding
1	**Impact detected**	**ET077:** Impact detected	**NO**	If **YES**, switch off the ignition for **40 seconds**, then switch it back on so the engine can be restarted. Clear the faults.
2	**Engine immobiliser**	**ET341:** Immobiliser code programmed	**YES**	If **NO**, run command **SC002 Program injection immobiliser code** via the UCH computer.
		ET003: Engine immobiliser	**INACTIVE**	In the event of a fault, run a multiplex network test using the **diagnostic tool**, then if the test is in order, test the UCH.

GETtheMANUALS.org

Tool status	Diagnostic tool title
ET001	+ After ignition computer feed
ET003	Engine immobiliser
ET007	Preheating unit control
ET042	Cruise control/speed limiter
ET077	Impact detected
ET115	Preheating indicator light
ET117	Overheating indicator light
ET205	Heating element no. 1 relay control
ET206	Heating element no. 2 relay control
ET207	Heating element no. 3 relay control
ET220	Fault/preheating indicator light
ET285	Injection → automatic transmission connection
ET520	OBD warning light
ET556	Driver deactivation of the cruise control/speed limiter
ET557	Deactivation by cruise control/speed limiter function
ET688	GMV control circuit 1
ET689	GMV control circuit 2
ET690	GMV control circuit 3
ET691	Start button
ET694	Swirl flap position setpoint
ET695	FR* row swirl flap position
ET696	RR* row swirl flap position
ET703	Cruise control/speed limiter buttons
ET704	Brake contact no. 1
ET705	Brake contact no. 2

FR*: Front
RR*: Rear

GETtheMANUALS.org

ET001	COMPUTER + AFTER IGNITION FEED

NOTES	**Special note:** Only apply the checks if the **ABSENT** and **PRESENT** statuses are not consistent with the system operating program. (see **Technical Note wiring diagram, Vel Satis phase 2**) (see **Technical Note wiring diagram, Espace IV phase 2**)

ABSENT	***NOTES***	Ignition on.

Check for an earth on the following connections:
– the three connection codes **N***,
between the earth and the engine management computer, **component code 120**.

If the connections are faulty and there is a repair procedure (see **Technical Note 6015A, Repairing electrical wiring, wiring: precautions for repairs**) repair the wiring, otherwise change the wiring.
Check for **+ 12 APC** on connection code **AP*** of engine management computer connector A, **component code 120**.
If there is no voltage, check the **insulation to earth and the continuity** between the following connection:
– connection code **AP***,
between **+ after ignition feed and** the engine management computer, **component code 120**.

If the connections are faulty and there is a repair procedure (see **Technical Note 6015A, Repairing electrical wiring, wiring: precautions for repairs**) repair the wiring, otherwise change the wiring.

PRESENT	***NOTES***	Ignition on.

Check for no **+ 12 APC** with the ignition off
– connection code **AP***,
between **+ after ignition feed** and the engine management computer, **component code 120**.

If the connections are faulty and there is a repair procedure (see **Technical Note 6015A, Repairing electrical wiring, wiring: precautions for repairs**) repair the wiring, otherwise change the wiring.

AFTER REPAIR	Carry out another fault finding check on the system. Deal with any other faults. Clear the stored faults.

GETtheMANUALS.org

ET003	ENGINE IMMOBILISER

NOTES	**Special note:** Apply the conformity check to see if the statuses are consistent with the operating programs of the system.

ACTIVE

If status **ET003 Immobiliser** is permanently **ACTIVE**, consult the interpretation of the UCH (see **87B, Passenger compartment connection unit**).

INACTIVE

When the ignition is switched on, and when driving, status **ET003 Immobiliser becomes INACTIVE**.
If it does not, consult the note (see **87B, Passenger compartment connection unit**).

AFTER REPAIR	Carry out another fault finding check on the system. Deal with any other faults. Clear the stored faults.

GETtheMANUALS.org

ET007	PREHEATING UNIT CONTROL

NOTES	**Special note:** Apply the conformity check to see if the statuses are consistent with the operating programs of the system. (see **Technical Note wiring diagram, Vel Satis phase 2**) (see **Technical Note wiring diagram, Espace IV phase 2**)

ACTIVE

When the ignition is switched on, status **ET007** becomes **ACTIVE** for a time that varies according to the engine coolant temperature. Both the relay and the heater plugs are supplied.
When the vehicle is started from cold, the injection computer always runs the preheating unit to allow the vehicle to start more easily, the status should become **ACTIVE** during the starting phase.
After starting, the status should remain **ACTIVE** for a variable period depending on the engine coolant temperature.
If the vehicle does not start and status **ET007** becomes **ACTIVE** when switching on the ignition or during the starting phase, a preheating connection or circuit component may be damaged.
Check:
– the supply fuses **FM18 and FM19 (70A)** on the power supply fuse board,
– the **+ 12 V** supply to the heater plugs after relay control, and that these are connected correctly.

Check for **insulation against earth, continuity and absence of interference resistance** on the following connections:
– connection code **3SP**,
between the heater plug of **cylinder no. 1, component code 680** and the heater plug control unit, **component code 257**.
– connection code **3SR**,
between the heater plug of **cylinder no. 3, component code 682** and the heater plug control unit, **component code 257**.
– connection code **3ST**,
between the heater plug of **cylinder no. 5, component code 1260** and the heater plug control unit, **component code 257**.
If the connections are faulty and there is a repair procedure (see **Technical Note 6015A, Repairing electrical wiring, wiring: precautions for repairs**) repair the wiring, otherwise change the wiring.

AFTER REPAIR	Carry out another fault finding check on the system. Deal with any other faults. Clear the stored faults.

GETtheMANUALS.org

ET007 **CONTINUED**	

Check for **insulation against earth, continuity and absence of interference resistance** on the following connections:
– connection code **3SQ**,
between the heater plug of **cylinder no. 2, component code 681** and the heater plug control unit, **component code 257**.
– connection code **3SS**,
between the heater plug of **cylinder no. 4, component code 683** and the heater plug control unit, **component code 257**.
– connection code **3SU**,
between the heater plug of **cylinder no. 6, component code 1261** and the heater plug control unit, **component code 257**.
If the connections are faulty and there is a repair procedure (see **Technical Note 6015A, Repairing electrical wiring, wiring: precautions for repairs**) repair the wiring, otherwise change the wiring.

If the vehicle starts, preheating has ended, and status **ET007** remains **ACTIVE** during the engine operating phases, consult the interpretation of faults **DF144 Preheating relay control circuit group 1** and **DF158 Preheating relay control circuit group 2**.

INACTIVE

If the vehicle does not start, the status remains **INACTIVE** and preheating was not executed when the ignition was switched on or during the starting phase.
Check the following connections:
– the two connection codes **BP35**,
between the battery, **component code 107** and the heater plug control unit, **component code 257**.

Check the following connections:
– connection code **3FF**,
– connection code **3HL**,
– connection code **3HM**,
between the preheating unit connectors, **component code 257** and the engine management computer, **component code 120**.

If the connections are faulty and there is a repair procedure (see **Technical Note 6015A, Repairing electrical wiring, wiring: precautions for repairs**) repair the wiring, otherwise change the wiring.

AFTER REPAIR	Carry out another fault finding check on the system. Deal with any other faults. Clear the stored faults.

GETtheMANUALS.org

ET042	CRUISE CONTROL/SPEED LIMITER

NOTES	**Special notes:** Only perform these tests if the statuses do not correspond with the system programming functions.

NOT DETECTED

If the vehicle is not fitted with cruise control/speed limiter function buttons, status **ET042** is permanently **NOT DETECTED**, therefore confirm that the cruise control or speed limiter function is not present on the vehicle.
If the vehicle is fitted with cruise control or speed limiter function buttons, the main button is in rest position (or Neutral) and the computer has just been programmed or reprogrammed, then status **ET042** is **NOT DETECTED**.
To enable the computer to detect the cruise control or speed limiter function, press the main switch when in cruise control position and then in speed limiter position.
Return to rest position
Status **ET042 is INACTIVE** on the diagnostic tool.

INACTIVE

When the main button is in rest position (or Neutral), status **ET042 Cruise control/speed limiter** is **INACTIVE**.
If **CRUISE CONTROL** or **SPEED LIMITER** appears despite the main button being in the rest position (or neutral), carry out the following operations:
Check the connections of the main cruise control/speed limiter switch.
Check for **+ 12 V** APC on the switch connector.
- Connection code **AP10, of component 1081**.

Disconnect the switch, and, in the rest position, check the insulation between:
- Connection codes **AP10 and 3FX, of component 1081**.
- Connection codes **AP10 and 3PD, of component 1081**.

– Check the **continuity between connections AP10 and 3PD of component 1081** in the speed limiter position.
– Check the **continuity between connections AP10 and 3PD of component 1081** in the cruise control position.
If the checks produce incorrect results, replace the switch.
Check the **insulation, continuity and the absence of interference resistance** on the following connections:
- Connection code **3FX**.
- Connection code **3PD**.

between components 1081 and 120.
Also check:
The engine management computer connections.
If the connections are faulty and there is a repair procedure (see **Technical Note 6015A, Repairing electrical wiring, wiring: precautions for repairs**) repair the wiring, otherwise change the wiring.

AFTER REPAIR	Carry out another fault finding check on the system. Deal with any other faults. Clear the stored faults.

GETtheMANUALS.org

ET042 **CONTINUED 1**	

SPEED LIMITER

When the driver presses the main speed limiter button, status **ET042** becomes **SPEED LIMITER**.
If **CRUISE CONTROL** appears when the driver presses the speed limiter switch, carry out the following operations:
Check the connections of the main cruise control/speed limiter switch.
Check for **+ 12 V** APC on the switch connector.
- Connection code **AP10, of component 1081**.

Disconnect the switch, and when it is in the rest position check the insulation between:
- Connection codes **AP10 and 3FX, of component 1081**.
- Connection codes **AP10 and 3PD, of component 1081**.

– Check the continuity between **connections AP10 and 3PD of component 1081** in the speed limiter position.
– Check the continuity between **connections AP10 and 3PD of component 1081** in the cruise control position.
If the checks produce incorrect results, replace the switch.
Check the **insulation, continuity and the absence of interference resistance** on the following connections:
- Connection code **3FX**.
- Connection code **3PD**.

between components 1081 and 120.
Also check:
The engine management computer connections.
If the connections are faulty and there is a repair procedure (see **Technical Note 6015A, Repairing electrical wiring, wiring: precautions for repairs**) repair the wiring, otherwise change the wiring.

AFTER REPAIR	Carry out another fault finding check on the system. Deal with any other faults. Clear the stored faults.

GETtheMANUALS.org

ET042 **CONTINUED 2**	

CRUISE CONTROL

When the driver presses the main cruise control button, status **ET042** becomes **CRUISE CONTROL**.
If **LIMITER** appears when the driver presses the cruise control button, carry out the following operations:
Check the connections of the main cruise control/speed limiter switch.
Check for **+ 12 V** APC on the switch connector.
- Connection code **AP10, of component 1081**.

Disconnect the switch, and, in the rest position, check the insulation between:
- Connection codes **AP10 and 3FX, of component 1081**.
- Connection codes **AP10 and 3PD, of component 1081**.

– Check the continuity between **connections AP10 and 3PD of component 1081** in the speed limiter position.
– Check the continuity between **connections AP10 and 3FX of component 1081** in the cruise control position.
If the results of the checks are not correct, replace the switch.
Check the **continuity, insulation and the absence of interference resistance** on the following connections:
- Connection code **3FX**.
- connection code **3PD**.

between components **1081 and 120**.
Also check:
The engine management computer connections.
If the connections are faulty and there is a repair procedure (see **Technical Note 6015A, Repairing electrical wiring, wiring: precautions for repairs**) repair the wiring, otherwise change the wiring.

AFTER REPAIR	Carry out another fault finding check on the system. Deal with any other faults. Clear the stored faults.

GETtheMANUALS.org

ET077	IMPACT DETECTED

NOTES	**Special note:** Apply the conformity check to see if the statuses are consistent with the operating programs of the system.

YES

If the vehicle has been involved in an accident, the injection computer receives the impact signal from the airbag computer via the multiplex network and may switch off the ignition. Status **ET077** is **YES**.
Switch off the ignition for **2 minutes** then switch on the ignition again so the engine can be restarted.
Test the multiplex network (see **88B, Multiplexing**) and deal with any faults present.

NO

Under normal operating conditions, status **ET077** is **NO** when the computer has received no impact signal.

AFTER REPAIR	Carry out another fault finding check on the system. Deal with any other faults. Clear the stored faults.

GETtheMANUALS.org

ET115	PREHEATING INDICATOR LIGHT

NOTES	**Special notes:** Apply the conformity check to see if the statuses are consistent with the operating programs of the system. Statuses **ET220 Fault/preheating indicator light** and **ET115 Preheating indicator light** are directly linked. If one is **ON**, the other must also assume the status **ON**.

ON

Check that the status **ET115** becomes **ON** and that the preheating warning light comes on when the ignition is switched on. Perform a fault finding procedure beforehand on the multiplex network.
If the network is not correct (see **88B Multiplexing**).
If the fault is still present, check the preheating unit and the heater plugs using the following faults:

- **DF144 Preheating relay control circuit group 1,**
- **DF158 Preheating relay control circuit group 2.**

– check the preheating unit using command **AC037 Preheating relay**.
If the fault is still present, run fault finding on the Instrument panel (see **83A, Instrument panel**).
If the fault is still present, contact your Techline.

OFF

Status **ET115 Preheating indicator light** is **OFF** when the preheating indicator light is off.

AFTER REPAIR	Carry out another fault finding check on the system. Deal with any other faults. Clear the stored faults.

GETtheMANUALS.org

ET117	OVERHEATING WARNING LIGHT

NOTES	**Special notes:** Apply the conformity check to see if the statuses are consistent with the operating programs of the system. Statuses **ET117** and **ET460 Coolant temperature warning light** are directly linked. If one is **ON**, the other must also assume the status **ON**.

ON

Check that status **ET117** becomes **ON** and that the overheating indicator light (coolant temperature) comes on when switching on the ignition.
Perform a fault finding procedure beforehand on the multiplex network.
If the network is not correct (see **88B Multiplexing**).
If the network is correct, check:
– the coolant temperature sensor,
– deal with any faults.
If the fault is still present, check the coolant temperature circuit to using the interpretation of fault:
– **DF721 Engine overheating.**
If the fault is still present, run fault finding on the Instrument panel (see **83A, Instrument panel**).
If the fault is still present, contact your Techline.

OFF

Status **ET117** is **INACTIVE** when the overheating warning light is off.

AFTER REPAIR	Carry out another fault finding check on the system. Deal with any other faults. Clear the stored faults.

GETtheMANUALS.org

ET205	HEATING ELEMENT 1 RELAY CONTROL

NOTES	**Special note:** Apply the conformity check to see if the statuses are consistent with the operating programs of the system. (see **Technical Note wiring diagram, Vel Satis phase 2**) (see **Technical Note wiring diagram, Espace IV phase 2**)

ACTIVE

Status **ET205 Heating element relay no. 1 control** can be:
– **ACTIVE:** when heating element relay control no. 1 is activated.
– **INACTIVE:** with the ignition on.
When heating element no. 1 relay is requested and status **ET205** is **INACTIVE**, a connection or circuit component of the heating element no. 1 relay may be damaged.
Check:
– the heating element no. 1 relay fuse: **FM12 (70A)**,
– the heating element no. 1 relay mounting connections,
– the engine management computer connections.
If the connections are faulty and there is a repair procedure (see **Technical Note 6015A, Repairing electrical wiring, wiring: precautions for repairs**) repair the wiring, otherwise change the wiring.
Check **the insulation from earth, the continuity and absence of interference resistance** on the following connection:
– connection code **3JA**,
between heating element relay 1, **component code 1067** and the engine management computer, **component code 120**.
If the connections are faulty and there is a repair procedure (see **Technical Note 6015A, Repairing electrical wiring, wiring: precautions for repairs**) repair the wiring, otherwise change the wiring.

Check the **insulation from + 12 V, the continuity and absence of interference resistance** for the following connection:
– connection code **3JA**,
between heating element relay 1, **component code 1067** and the engine management computer, **component code 120**.
If the connections are faulty and there is a repair procedure (see **Technical Note 6015A, Repairing electrical wiring, wiring: precautions for repairs**) repair the wiring, otherwise change the wiring.

INACTIVE

Status **ET205** becomes **INACTIVE** when the heating control is not activated.

AFTER REPAIR	Carry out another fault finding check on the system. Deal with any other faults. Clear the stored faults.

GETtheMANUALS.org

ET206	HEATING ELEMENT 2 RELAY CONTROL

NOTES	**Special note:** Apply the conformity check to see if the statuses are consistent with the operating programs of the system. (see **Technical Note wiring diagram, Vel Satis phase 2**) (see **Technical Note wiring diagram, Espace IV phase 2**)

ACTIVE

Status **ET206 Heating element no. 2 relay control** can be:
– **ACTIVE:** when heating element no. 2 relay control is activated.
– **INACTIVE:** with the ignition on.
When heating element no. 2 relay is requested and status **ET206** is **INACTIVE**, a connection or circuit component of the heating element no. 2 relay may be damaged.
Check:
– the heating element no. 2 relay fuse **FM13 (70A)**,
– the heating element no. 2 relay mounting connections,
– the engine management computer connections.
If the connections are faulty and there is a repair procedure (see **Technical Note 6015A, Repairing electrical wiring, wiring: precautions for repairs**) repair the wiring, otherwise change the wiring.
Check **the insulation from earth, the continuity and absence of interference resistance** on the following connection:
– connection code **3JAA**,
between heating element 2 relay, **component code 1068** and the engine management computer, **component code 120**.
If the connections are faulty and there is a repair procedure (see **Technical Note 6015A, Repairing electrical wiring, wiring: precautions for repairs**) repair the wiring, otherwise change the wiring.

Check the **insulation from + 12 V, the continuity and absence of interference resistance** on the following connection:
– connection code **3JAA**,
between heating element 2 relay, **component code 1068** and the engine management computer, **component code 120**.
If the connections are faulty and there is a repair procedure (see **Technical Note 6015A, Repairing electrical wiring, wiring: precautions for repairs**) repair the wiring, otherwise change the wiring.

INACTIVE

Status **ET206** becomes **INACTIVE** when the heating control is not activated.

AFTER REPAIR	Carry out another fault finding check on the system. Deal with any other faults. Clear the stored faults.

GETtheMANUALS.org

ET207	HEATING ELEMENT NO. 3 RELAY CONTROL

NOTES	**Special note:** Apply the conformity check to see if the statuses are consistent with the operating programs of the system. (see **Technical Note wiring diagram, Vel Satis phase 2**) (see **Technical Note wiring diagram, Espace IV phase 2**)

ACTIVE

Status **ET207** can be:
– **ACTIVE:** when heating element no. 3 relay control is activated.
– **INACTIVE:** with the ignition on.
When heating element no. 3 relay is requested and status **ET207** is **INACTIVE**, a connection or circuit component of the heating element no. 3 relay may be damaged.
Check:
– the heating element no. 3 relay fuse **FM14 (70 A)**,
– the heating element no. 3 relay mounting connections,
– the engine management computer connections.
If the connections are faulty and there is a repair procedure (see **Technical Note 6015A, Repairing electrical wiring, wiring: precautions for repairs**) repair the wiring, otherwise change the wiring.
Check **the insulation from earth, the continuity and absence of interference resistance** on the following connection:
– connection code **3JAB**,
between heating element 3 relay, **component code 1069** and the engine management computer, **component code 120**.
If the connections are faulty and there is a repair procedure (see **Technical Note 6015A, Repairing electrical wiring, wiring: precautions for repairs**) repair the wiring, otherwise change the wiring.

Check the **insulation from + 12 V, the continuity and absence of interference resistance** on the following connection:
– connection code **3JAB**,
between heating element 3 relay, **component code 1069** and the engine management computer, **component code 120**.
If the connections are faulty and there is a repair procedure (see **Technical Note 6015A, Repairing electrical wiring, wiring: precautions for repairs**) repair the wiring, otherwise change the wiring.

INACTIVE

Status **ET207 Heating element no. 3 relay control** becomes **INACTIVE** when the heater control is not activated.

AFTER REPAIR	Carry out another fault finding check on the system. Deal with any other faults. Clear the stored faults.

GETtheMANUALS.org

ET220	FAULT/PREHEATING INDICATOR LIGHT

NOTES	Apply the conformity check to see if the statuses are consistent with the operating programs of the system. Statuses **ET220 Fault/preheating indicator light** and **ET115 Preheating indicator light** are directly linked. If one is **ON**, the other must assume the same status.

ON

Check that status **ET220 Fault/preheating indicator light** becomes **ON** and that the preheating indicator light is activated when the ignition is switched on.
Perform a fault finding procedure beforehand on the multiplex network.
If the network is not correct (see **88B Multiplexing**).
If the network diagnosis is OK, check:
– the complete engine injection system.
If the fault is still present, run fault finding on the Instrument panel (see **83A, Instrument panel**).
If the fault is still present, contact your Techline.

OFF

Status **ET220** is **OFF** when the preheating indicator light is off.

AFTER REPAIR	Carry out another fault finding check on the system. Deal with any other faults. Clear the stored faults.

GETtheMANUALS.org

ET341	IMMOBILISER CODE PROGRAMMED

NOTES	**Special note:** Apply the conformity check to see if the statuses are consistent with the operating programs of the system.

YES

Status **ET341** becomes **YES** if dialogue is possible between the UCH and the injection computer and the RENAULT card code is recognised.
Engine starting authorisation is only given if the code is recognised by the UCH computer, and status **ET003 Engine immobiliser** is **INACTIVE**.

NO

The code remains **NO** if dialogue between the UCH and the injection computer is not possible. Status **ET003 Engine immobiliser** is **ACTIVE**.
The fault may be caused by incorrect card programming (see **87B, Passenger compartment connection unit** and follow the **RENAULT card programming** procedure).
If the card codes are not faulty, carry out a multiplex network test (see **88B, Multiplex**).
Where the fault finding procedure was performed by function, ensure that dialogue is present between the UCH, the Protection and Switching unit and the injection computer.
If dialogue is not established, contact the Techline.

AFTER REPAIR	Carry out another fault finding check on the system. Deal with any other faults. Clear the stored faults.

GETtheMANUALS.org

ET520	OBD WARNING LIGHT

NOTES	**Special note:** Apply the conformity check to see if the statuses are consistent with the operating programs of the system.

ACTIVE

Check that status **ET520** becomes **ACTIVE** and that the OBD warning light comes on when the ignition is switched on.
Perform a fault finding procedure beforehand on the multiplex network.
If the network is not correct (see **88B Multiplexing**).
If the network is correct, check:
– the complete engine injection system,
– deal with any faults.
If the fault is still present, run fault finding on the Instrument panel (see **83A, Instrument panel**).
If the fault is still present, contact your Techline.

INACTIVE

Status **ET520** is **INACTIVE** when the OBD warning light is off.

AFTER REPAIR	Carry out another fault finding check on the system. Deal with any other faults. Clear the stored faults.

GETtheMANUALS.org

ET556	DRIVER'S DEACTIVATION OF THE CRUISE CONTROL/SPEED LIMITER

NOTES	**Special notes:** Apply the conformity check to see if the statuses are consistent with the operating programs of the system.

Note:
Cruise control can be activated when the vehicle speed exceeds **18 mph (30 km/h)**.
Status **ET556** specifies 6 causes of cruise control deactivation which are due to driver's demands or to the external environment (e.g. STATUS 4).
To reactivate the cruise control/speed limiter, press button "R".
IMPORTANT
To reinitialise the deactivations stored by the injection computer, use command RZ007 Clearing.

STATUS 1	**Brake pedal depressed**
	The cruise control function is deactivated each time the brake pedal is depressed. Status **ET556** becomes **STATUS 1**, when driving, with cruise control active (**ET042 Cruise control/Speed limiter: CRUISE CONTROL**) and brake pedal depressed. This deactivates cruise control. If status **ET556** becomes **STATUS 1** without pressing the brake pedal, consult the interpretation of statuses **ET704** and **ET705 Brake contact no.1 and no. 2**.

STATUS 2	**Clutch pedal depressed**
	Manual gearboxes ONLY The cruise control function is deactivated if the gearbox is no longer coupled to the engine (clutch pedal depressed). Status **ET556** becomes **STATUS 2** when driving, with cruise control active (**ET042 Cruise control/speed limiter: CRUISE CONTROL**) and brake pedal depressed. This deactivates cruise control. If status **ET556** becomes **STATUS 2** without the clutch pedal being pressed, consult the interpretation of status **ET405 Clutch pedal switch**.

AFTER REPAIR	Carry out another fault finding check on the system. Deal with any other faults. Clear the stored faults.

GETtheMANUALS.org

ET556 CONTINUED	

STATUS 3	**Suspend button pressed**
	The cruise control/speed limiter function is deactivated each time the suspend button is pressed. Status **ET556** becomes **STATUS 3** when driving with either the cruise control or speed limiter active and if the driver presses the **0** button. This deactivates cruise control. If status **ET556** becomes **STATUS 3** without pressing the **0** button, consult the interpretation of status **ET703 Cruise control/speed limiter buttons** and run fault finding on the **R/0** control button, located on the right-hand side on the steering wheel.

STATUS 4	**Traction control request**
	If the vehicle being diagnosed is fitted with a traction control system, the cruise control function is deactivated every time the traction control is requested by the ABS computer. Status **ET556** becomes **STATUS 4** when driving, with cruise control active (**ET042 Cruise control/speed limiter: CRUISE CONTROL**) and traction control requested. If status **ET556** becomes **STATUS 4** with no traction control request (see **38C, Anti-lock Braking System**).

STATUS 5	**Gear lever in neutral (manual gearbox) or neutral (automatic transmission)**
	Status **ET556** becomes **STATUS 5**, when driving with cruise control active (**ET042 Cruise control/speed limiter: CRUISE CONTROL**) and: – If the driver puts the gear lever in neutral position on a manual gearbox without declutching or, – if the gear lever is in neutral on an automatic transmission. This deactivates cruise control. If status **ET556** becomes **STATUS 5** without putting the gear lever in neutral position on a manual gearbox without declutching, or in neutral position on an automatic transmission, then contact Techline.

STATUS 6	**Inconsistency between the request and the vehicle speed**
	Status **ET556** changes to **STATUS 6** if the computer detects too great a difference between the speed requested by the driver and the vehicle speed. This could occur when driving with cruise control active (**ET042 Cruise control/ speed limiter: CRUISE CONTROL**) and when there is a significant difference. This inconsistency deactivates cruise control. If status **ET556** changes to **STATUS 6** without a great difference in the speeds, contact the Techline.

AFTER REPAIR	Carry out another fault finding check on the system. Deal with any other faults. Clear the stored faults.

GETtheMANUALS.org

ET557	CRUISE CONTROL/SPEED LIMITER DEACTIVATION BY FUNCTION

NOTES	**Special notes:** Only perform these tests if the statuses do not correspond with the system programming functions.

Note:
Cruise control remains deactivated as long as the vehicle speed does not exceed **18 mph (30 km/h).**
Status **ET557** details 4 causes for cruise control deactivation.
IMPORTANT
To reinitialise the deactivations stored by the injection computer, use command RZ007 Fault memory.

STATUS 2	**Monitoring by injection computer**
	Status **ET557** becomes **STATUS 2** when driving with cruise control active (**ET042 Cruise control/speed limiter: CRUISE CONTROL**) and if the injection computer detects a fault in the injection system or in the engine management assembly. This signal is conveyed on the multiplex line and deactivates the cruise control. Carry out a multiplex network test, then run fault finding on the injection computer. Deal with the present or stored faults (see **13A Diesel injection or 17A Diesel injection**). Clear the fault memory by applying command **RZ007 Fault memory**. If status **ET557** remains **STATUS 2** is still present, contact Techline.

STATUS 3	**Vehicle speed monitoring**
	If status **ET557** changes to **STATUS 3** if the vehicle speed received by the computer is invalid or absent. This signal is conveyed on the multiplex line and deactivates the cruise control. Carry out a multiplex network test, then run fault finding on the **ABS** computer. Deal with the present or stored faults (see **38C, ABS**). **Reinitialise ET557 of the automatic transmission computer by running command RZ007 Fault memory.** If status **ET557** remains **STATUS 3** is still present, contact Techline.

AFTER REPAIR	Carry out another fault finding check on the system. Deal with any other faults. Clear the stored faults.

GETtheMANUALS.org

ET557 CONTINUED	

STATUS 4	Cruise control or speed limiter monitoring
	If status **ET557** is **STATUS 4**, consult the interpretation: – of status **ET042 Cruise control/Speed limiter**, – of status **ET703 Cruise control/Speed limiter buttons**, – of status **ET704 Brake contact no. 1**, – of status **ET705 Brake contact no. 2**, to test the cruise control system components and locate the faulty component. If status **ET557** becomes **STATUS 4**, deal with the faults present or stored in the computer. If the fault is still present, contact the Techline.

STATUS 5	Vehicle speed not refreshed
	Status **ET557** becomes **STATUS 5** if the vehicle speed received by the computer does not vary. Carry out fault finding on the **ABS** computer. If there are faults present (see **MR 404, 38C, ABS**). If the fault is still present, contact the Techline.

AFTER REPAIR	Carry out another fault finding check on the system. Deal with any other faults. Clear the stored faults.

GETtheMANUALS.org

ET688	GMV CONTROL CIRCUIT 1

NOTES	Apply the conformity check to see if the statuses are consistent with the operating programs of the system. If the vehicle is fitted with air conditioning, the GMV electrical circuit contains 5 relays. The GMV relay unit will be run by control 1 when the engine coolant temperature **is between 94 and 96 °C** and will be dedicated to cooling the engine as long as the engine coolant temperature does not exceed **96 °C**. If the engine coolant temperature exceeds **99 °C**, the GMV relay unit will be run by controls 2 and 3 and the engine cooling fans will rotate more quickly.

ACTIVE

When the coolant has reached **96 °C**, the injection computer controls **connection 3JN** which supplies the GMV relay unit, status **ET688 GMV control circuit 1** becomes **ACTIVE**. The GMV relay unit supplies the engine cooling fan and they start to turn.
Run command **AC228 GMV control circuit 1** and check visually that the cooling fan is turning. If this is not the case, carry out the following operations:
– check the condition of fuses **FM15 (60 A) and FM23 (60 A)**,
– check for **+ 12 V** on **connection codes BP71** and **BP72** of the GMV relay unit,
– then check the **continuity and absence of interference resistance** on the following connection:
  – connection code **3JN**,

between the GMV relay unit, **component code 1839** and the engine management computer, **component code 120**.
– check for **+ 12 V** on **connection codes 3AJG and 3AJH** of the GMV, **component codes 188**, when running command **AC228 GMV control circuit 1**.

If the connections are faulty and there is a repair procedure (see **Technical Note 6015A, Repairing electrical wiring, wiring: precautions for repairs**) repair the wiring, otherwise change the wiring.

INACTIVE

If the engine temperature is less than **94 °C**, the engine cooling fans must stop turning. If status **ET688** becomes **INACTIVE**, the GMV relay unit should no longer be controlled.
Status **ET688** becomes **INACTIVE** when the GMV relay unit is supplied by controls 2 and 3 (**connection codes 3JP and 3AJD** of the injection computer), if the temperature is above **96 °C**.

AFTER REPAIR	Carry out another fault finding check on the system. Deal with any other faults. Clear the stored faults.

GETtheMANUALS.org

ET689	GMV 2 CONTROL CIRCUIT

NOTES	Apply the conformity check to see if the statuses are consistent with the operating programs of the system. If the vehicle is fitted with air conditioning, the GMV electrical circuit contains 5 relays. If the engine coolant temperature exceeds **96 ˚C** and is between **96 ˚C** and **99 ˚C**, the GMV relay unit will be actuated by controls 2 and 3 and the engine cooling fans will then turn more quickly. If the engine coolant temperature is **between 102 and 107 ˚C after switching the ignition off or stopping the engine,** the GMV relay unit is actuated by control 2. (see **Technical Note wiring diagram, Vel Satis phase 2**) (see **Technical Note wiring diagram, Espace IV phase 2**)

ACTIVE

When the coolant temperature is between **102 and 107 ˚C** after stopping the engine, the injection computer controls **connection code 3JP** which supplies the GMV relay unit, status **ET689 GMV control circuit 2** becomes **ACTIVE**. The GMV relay unit supplies the engine cooling fan and they start to turn.
Run command **AC229 GMV control circuit 2** and check visually that the cooling fan is turning. If this is not the case, carry out the following operations:
– check the condition of fuses **FM15 (60 A) and FM23 (60 A)**,
– check for **+ 12 V** on **connection codes BP71** and **BP72** of the GMV relay unit.
then check the **continuity and absence of interference resistance** on the following connection:
– connection code **3JP**,
between the GMV relay unit, **component code 1839** and the engine management computer, **component code 120**.
– check for **+ 12 V** on **connection codes 3AJH** and **3AJG** of the GMV when running command **AC229 GMV control circuit 2**.
If the connections are faulty and there is a repair procedure (see **Technical Note 6015A, Repairing electrical wiring, wiring: precautions for repairs**) repair the wiring, otherwise change the wiring.

INACTIVE

If the engine coolant temperature is less than **102 ˚C** when stopped, the engine cooling fans cannot turn and the GMV relay unit cannot be run.
Status **ET689** becomes **INACTIVE** when the GMV relay unit is no longer supplied by any injection computer command.

AFTER REPAIR	Carry out another fault finding check on the system. Deal with any other faults. Clear the stored faults.

GETtheMANUALS.org

ET690	GMV CONTROL CIRCUIT 3

NOTES	Apply the conformity check to see if the statuses are consistent with the operating programs of the system. If the vehicle is fitted with air conditioning, the GMV electrical circuit contains 5 relays. The GMV relay unit will be run by controls 2 and 3 when the engine coolant temperature is between **96 °C** and **99 °C** and will be dedicated to cooling the engine as long as the engine coolant temperature does not exceed **99 °C**. If the engine coolant temperature exceeds **99 °C**, the GMV relay unit will be run by controls 1, 2 and 3 and the engine cooling fans will rotate more quickly.

ACTIVE

When the coolant reaches **96 °C**, the injection computer controls **connections 3JP and 3AJD** which supply the GMV relay unit, status **ET690 GMV control circuit 3** becomes **ACTIVE**. The GMV relay unit supplies the engine cooling fan and they start to turn.
Run command **AC230 GMV control circuit 3** and check visually that the cooling fans are turning. If this is not the case, carry out the following operations:
– check the condition of fuses **FM15 (60 A) and FM23 (60 A)**.
– check for **+ 12 V** on **connection codes BP71** and **BP72** of the GMV relay unit.
then check the **continuity and absence of interference resistance** on the following connection:
– connection code **3AJD**,
between the GMV relay unit, **component code 1839** and the engine management computer, **component code 120**.
– check for **+ 12 V** on **connection codes 3AJG** and **3AJH** of the GMV when running command **AC230 GMV control circuit 3**.
If the connections are faulty and there is a repair procedure (see **Technical Note 6015A, Repairing electrical wiring, wiring: precautions for repairs**) repair the wiring, otherwise change the wiring.

AFTER REPAIR	Carry out another fault finding check on the system. Deal with any other faults. Clear the stored faults.

GETtheMANUALS.org

ET690 **CONTINUED**	

INACTIVE

If the engine coolant temperature is less than **96** ˚**C**, the GMV relay unit can only be requested by control 1 (**connection 3JN** of the injection computer) therefore the engine cooling fan must turn at a slower speed than if **ET690** is **ACTIVE**, (GMV relay unit requested by control 3).
Status **ET690 GMV control circuit 3** becomes **INACTIVE** when the GMV relay unit is supplied by control 1 (**connection 3JN** of the injection computer) (engine running).

AFTER REPAIR	Carry out another fault finding check on the system. Deal with any other faults. Clear the stored faults.

GETtheMANUALS.org

ET691	START BUTTON

NOTES	**Special note:** Apply the conformity check to see if the statuses are consistent with the operating programs of the system. (see **Technical Note wiring diagram, Vel Satis phase 2**) (see **Technical Note wiring diagram, Espace IV phase 2**)

ACTIVE

Status **ET691** becomes **ACTIVE** when the vehicle's starter button is pressed.
If this is not the case, carry out the following operations:
Check the **continuity and the absence of interference resistance** on the following connections:
– connection code **133C**,
– connection code **133B**,
between the UCH connector, **component code 645** and the engine management computer, **component code 120**.
If the connections are faulty and there is a repair procedure (see **Technical Note 6015A, Repairing electrical wiring, wiring: precautions for repairs**) repair the wiring, otherwise change the wiring.

If the fault is still present, run fault finding on **the passenger compartment connection unit** (see **87B, UCH, Passenger compartment connection unit**).

INACTIVE

Status **ET691** is **INACTIVE** except when the vehicle's starter button is pressed.

AFTER REPAIR	Carry out another fault finding check on the system. Deal with any other faults. Clear the stored faults.

GETtheMANUALS.org

ET703	CRUISE CONTROL/SPEED LIMITER BUTTONS

NOTES	**Special notes:** Only perform these tests if the statuses do not correspond with the system programming functions.

INCREASE	Status **ET703** becomes **INCREASE** when the **+** button for the cruise control is pressed. This button is located on the left-hand side on the steering wheel. If status **ET703** does not become **INCREASE**, check the condition of the **+/-** cruise control button and its connector. Repair if necessary. **To remove the driver's airbag and carry out the measurements in complete safety** (see **MR 404 or MR 407, 38C, ABS**). **Measure the resistance of the following connections whilst pressing the "+" button (on the button tracks):** ● Connection code **86G**, of component **331**. ● Connection code **86M**, of component **331**. If the resistance is not approximately **300** Ω, check the continuity of the button connection when not pressed. If there is continuity, replace the **+/-** control button.

DECREASE	Status **ET703** becomes **DECREASE** when the cruise control **-** button is pressed. This button is located on the left-hand side on the steering wheel. If status **ET703** does not change to **DECREASE**, check the condition of the **+/-** cruise control button and its connector. Repair if necessary. **To remove the driver's airbag and carry out the measurements in complete safety** (see **MR 404 or MR 407, 38C, ABS**). If there is a repair procedure (See **Technical Note 6015A, Electrical wiring repair, Wiring: Precautions for repair**), repair the wiring, otherwise replace the wiring. Measure the **resistance of the following connection whilst pressing the "-" button (on the button tracks)**: ● Connection code **86G**, of component **331**. ● Connection code **86M**, of component **331**. If the resistance is not approximately **100** Ω, check the continuity of the connection when the button is not pressed. If there is continuity, replace the **+/-** control button.

AFTER REPAIR	Carry out another fault finding check on the system. Deal with any other faults. Clear the stored faults.

GETtheMANUALS.org

ET703 **CONTINUED**	

SUSPEND	Status **ET703** changes to **SUSPEND** when the **0** cruise control button is pressed. This button is located on the right-hand side on the steering wheel. If status **ET703** does not change to **SUSPEND**, check the condition of the **R/0** cruise control button and the condition of its connector. **To remove the driver's airbag and carry out the measurements in complete safety** (see **MR 404 or MR 407, 38C, ABS**). If there is a repair procedure (See **Technical Note 6015A, Electrical wiring repair, Wiring: Precautions for repair**), repair the wiring, otherwise replace the wiring. Measure the **resistance of the following connection whilst pressing the "0" button (on the button tracks)**: ● Connection code **86G**, of component **331**. ● Connection code **86M**, of component **331**. If the resistance is not approximately **0** Ω, replace the **R/0** control button. If there is continuity, replace the **R/0** control button.
RESUME	Status **ET703** changes to **RESUME** when the **R** cruise control button is pressed. This button is located on the right-hand side on the steering wheel. If status **ET703** does not change to **RESUME** check the condition of the **R/0** cruise control button and the condition of its connector. Repair if necessary. **To remove the driver's airbag and carry out the measurements in complete safety** (see **MR 404 or MR 407, 38C, ABS**). If there is a repair procedure (See **Technical Note 6015A, Electrical wiring repair, Wiring: Precautions for repair**), repair the wiring, otherwise replace the wiring. Measure the **resistance of the following connection whilst pressing the "R" button (on the button tracks)**: ● Connection code **86G**, of component **331**. ● Connection code **86M**, of component **331**. If the resistance is not approximately **900** Ω, check the continuity of the connection when the button is not pressed. If there is continuity, replace the **R/0** control button.

AFTER REPAIR	Carry out another fault finding check on the system. Deal with any other faults. Clear the stored faults.

GETtheMANUALS.org

ET704 **ET705**	BRAKE CONTACT NO. 1 BRAKE CONTACT NO. 2

NOTES	**Special note:** Only perform the tests if the statuses do not correspond with the system programming functions.

Note:
Statuses **ET704 and ET705** should change at the same time. In the event of inconsistency, consult the interpretation of fault **DF051 Cruise control/speed limiter function**.

ACTIVE

If the brake lights are working:
– check the continuity and make sure there is no interference resistance on the following connection:
● connection code **5A**,
between components 160 and 120/645/119.
If there is a repair procedure (See **Technical Note 6015A, Electrical wiring repair, Wiring: Precautions for repair**), repair the wiring, otherwise replace the wiring.

or

INACTIVE

If the brake lights are not operational, check:
– the condition and fitting of the brake switch,
– the condition and conformity of the brake light fuse,
– the conformity of the values in the following table:

	Continuity between connections	**Insulation between connections**
Switch engaged (Brake pedal released)	**5A and SP13**	**65G and AP10**
Switch released (Brake pedal depressed)	**65G and AP10**	**5A and SP13**

Replace the switch if the values obtained are not correct.

AFTER REPAIR	Carry out another fault finding check on the system. Deal with any other faults. Clear the stored faults.

GETtheMANUALS.org

Tool Parameter	Diagnostic tool title
PR005	EGR valve opening setpoint
PR008	Rail reference pressure
PR017	Fuel flow
PR030	Accelerator pedal position
PR035	Atmospheric pressure
PR038	Rail pressure
PR041	Turbocharging pressure
PR055	Engine speed
PR063	Fuel temperature
PR064	Coolant temperature
PR066	Oil temperature
PR074	Battery voltage
PR077	EGR valve position sensor voltage
PR079	Atmospheric pressure sensor voltage
PR080	Rail pressure sensor voltage
PR081	Inlet temperature sensor voltage
PR082	Fuel temperature sensor voltage
PR083	Air temperature sensor voltage
PR084	Coolant temperature sensor voltage
PR085	Oil temperature sensor voltage
PR089	Vehicle speed
PR130	Cruise control setpoint
PR132	Air flow
PR147	Pedal potentiometer voltage gang 1
PR148	Pedal potentiometer voltage gang 2
PR178	Cruise control switch voltage
PR213	Rail pressure loop difference

GETtheMANUALS.org

Tool Parameter	Diagnostic tool title
PR215	Sensor supply voltage no. 1
PR216	Sensor supply voltage no. 2
PR220	EGR valve OCR*
PR224	Turbocharging pressure sensor voltage
PR225	Air flow sensor voltage
PR311	Manifold air temperature
PR318	Pedal sensor supply gang 2
PR342	Pedal sensor supply gang 1
PR364	Cylinder no. 1 fuel flow correction
PR365	Cylinder no. 4 fuel flow correction
PR405	Cylinder no. 2 fuel flow correction
PR406	Cylinder no. 3 fuel flow correction
PR407	Cylinder no. 5 fuel flow correction
PR408	Cylinder no. 6 fuel flow correction
PR635	Sensor supply voltage no. 3
PR730	Air flow sensor temperature
PR766	Turbocharger position setpoint
PR767	Turbocharger position

*Opening cyclic ratio.

GETtheMANUALS.org

PR030	ACCELERATOR PEDAL POSITION

NOTES	**There must be no present or stored faults.** Perform this fault finding procedure: – after finding an inconsistency in the parameter, – after a customer complaint (e.g. lack of power). (see **Technical Note wiring diagram, Vel Satis phase 2**) (see **Technical Note wiring diagram, Espace IV phase 2**)

ELECTRICAL CONFORMITY OF THE SENSOR:

Check the **continuity and for the absence of interference resistance** on the following connections:

- connection code **3LR**,
- connection code **3LT**,
- connection code **3LS**,

between the pedal potentiometer connector, **component code 921** and the engine management computer, **component code 120**.

If the connections are faulty and there is a repair procedure (see **Technical Note 6015A, Repairing electrical wiring, wiring: precautions for repairs**) repair the wiring, otherwise change the wiring.

Pedal sensor **connected**, vehicle with **ignition on** and **engine stopped**:

– check that the value of **PR030 Accelerator pedal position**:
  - **0%** no load,
  - **100% ± 5** full load before pedal kickdown point,
  - **100% ± 139%** full load after pedal kickdown point.

– if the value is not correct, replace the pedal potentiometer.

AFTER REPAIR	Repeat the conformity check from the start.

GETtheMANUALS.org

PR038	RAIL PRESSURE

NOTES	**There must be no present or stored faults.** Perform this fault finding procedure: – after finding an inconsistency in the parameter, – after a customer complaint (starting faults, poor performance, stalling etc.). (see **Technical Note wiring diagram, Vel Satis phase 2**) (see **Technical Note wiring diagram, Espace IV phase 2**)

ELECTRICAL CONFORMITY OF THE SENSOR:

Check the rail pressure sensor connectors.
Check the injection computer connections.
If the connections are faulty and there is a repair procedure (see **Technical Note 6015A, Repairing electrical wiring, wiring: precautions for repairs**) repair the wiring, otherwise change the wiring.
Check the **continuity and the absence of the interference resistance** of the following connections:

- the two connection codes **3LY**,
- connection code **3AX**,
- connection code **3CJ**,

between the rail pressure sensor connector, **component code 1032** and the engine management computer, **component code 120**.
If the connections are faulty and there is a repair procedure (see **Technical Note 6015A, Repairing electrical wiring, wiring: precautions for repairs**) repair the wiring, otherwise change the wiring.

Check that there are no external diesel leaks from the high pressure fuel circuit.
With the ignition on and the engine stopped for over 1 minute:
Display parameter **PR038 Rail pressure**:
– If the pressure is below **90 bar**, the sensor is in order.
– If the pressure is above **90 bar**, contact the Techline.

AFTER REPAIR	Repeat the conformity check from the start.

GETtheMANUALS.org

PR041	TURBOCHARGING PRESSURE

NOTES	**There must be no present or stored faults.** Perform this fault finding procedure: – after finding an inconsistency in the parameter, – after a customer complaint (e.g. lack of power). (see **Technical Note wiring diagram, Vel Satis phase 2**) (see **Technical Note wiring diagram, Espace IV phase 2**)

ELECTRICAL CONFORMITY OF THE SENSOR:

Check for continuity and the absence of interference resistance on the following connections:
– connection code **3LP**,
– connection code **3AX**,
– connection code **3CJ**,
between the turbocharging pressure sensor connector, **component code 1474** and the engine management computer, **component code 120**.
If the connections are faulty and there is a repair procedure (see **Technical Note 6015A, Repairing electrical wiring, wiring: precautions for repairs**) repair the wiring, otherwise change the wiring.

Vehicle with ignition on, and the engine stopped for over 1 minute:
Compare the values of **PR041 Turbocharging pressure** and **PR035 Atmospheric pressure**.
If the difference between **PR041** and **PR035** is greater than **0.1 bar**, check the value of **PR035 Atmospheric pressure** by comparing it with the value displayed on a correct vehicle in the workshop.
If the value of **PR035 Atmospheric pressure** is not correct (difference greater than **0.1 bar** between the 2 vehicles), contact the Techline.
Otherwise (when the value **PR035 Atmospheric pressure** is correct), change the turbocharging pressure sensor.
If the difference between **PR041** and **PR035** is less than **0.1 bar**,
Start the engine; engine at idling speed:
Compare the values of **PR041 Turbocharging pressure** and **PR035 Atmospheric pressure**.
If the difference between **PR041** and **PR035** is greater than **0.2 bar**,
Check the air inlet circuit: apply **test 4: Turbocharging and air inlet circuit check**.
Low and **high pressure** air circuit **sealed** and **not obstructed**: Pipes, mounting clamps present and tightened, turbocharger pressure sensor fitted, heat exchanger etc.
Check that the damper valve is not jammed closed.
Repair if necessary.

AFTER REPAIR	Repeat the conformity check from the start.

GETtheMANUALS.org

PR063	FUEL TEMPERATURE

NOTES	**There must be no present or stored faults.** Perform this fault finding procedure: – after finding an inconsistency in the parameter, – after a customer complaint (e.g. loss of power). (see **Technical Note wiring diagram, Vel Satis phase 2**) (see **Technical Note wiring diagram, Espace IV phase 2**)

ELECTRICAL CONFORMITY OF THE SENSOR:

Check **for continuity and absence of interference resistance** on the following connections:
– connection code **3LD**,
– connection code **3CK**,
between the fuel temperature sensor, **component code 1066** and the engine management computer, **component code 120**.
If the connections are faulty and there is a repair procedure (see **Technical Note 6015A, Repairing electrical wiring, wiring: precautions for repairs**) repair the wiring, otherwise change the wiring.

Measure the fuel temperature sensor resistance between the connections **3LD** and **3CK** of the connector for component **1066**.
Replace the sensor if the resistance is not: **5,658 Ω ± 280 at + 10 °C**
3,511 Ω ± 176 at + 20 °C
980 Ω ± 50 at + 50 °C

AFTER REPAIR	Repeat the conformity check from the start.

GETtheMANUALS.org

PR064	COOLANT TEMPERATURE

NOTES	**There must be no present or stored faults.** Perform this fault finding procedure: – after finding an inconsistency in the parameter, – after a customer complaint (e.g. lack of power). (see **Technical Note wiring diagram, Vel Satis phase 2**) (see **Technical Note wiring diagram, Espace IV phase 2**)

ELECTRICAL CONFORMITY OF THE SENSOR:

Check the **continuity** and absence of **interference resistance** on the following connections:
– connection code **3C**,
– connection code **3CK**,
between coolant temperature sensor, **component code 244** and the engine management computer, **component code 120**.
If the connections are faulty and there is a repair procedure (see **Technical Note 6015A, Repairing electrical wiring, wiring: precautions for repairs**) repair the wiring, otherwise change the wiring.

Measure the coolant temperature sensor resistance between its connections **3C** and **3CK** of the connector for component **244**.
Replace the sensor if the resistance is not: **3,511 Ω ± 176 at + 20 °C**
980 Ω ± 50 at + 50 °C
469 Ω ± 24 at + 70 °C
242 Ω ± 12 at + 90 °C

AFTER REPAIR	Repeat the conformity check from the start.

GETtheMANUALS.org

PR132	AIR FLOW

NOTES	**There must be no faults present.** Perform this fault finding procedure: – after finding an inconsistency in the parameter, – or after a customer complaint (lack of power, smoke etc.). (see **Technical Note wiring diagram, Vel Satis phase 2**) (see **Technical Note wiring diagram, Espace IV phase 2**)

Check the air inlet circuit (from the air filter inlet to the inlet manifold):
apply **test 4: Air inlet circuit and turbocharging check**:
– air filter unit inlet not blocked and filter not clogged,
– oil vapour recirculation circuit connected correctly,
– **tightness** and **not blocked low** and **high-pressure** air circuit: ducts, presence and tightness of the mounting clips, turbocharger pressure sensor mounting, intercooler, etc...,
– check that the damper valve is not jammed closed.
Carry out the necessary repairs.
Switch on the ignition.
Check **the conformity** of the following connection:
– connection code **3LU**,
of the air flow sensor, **component code 799 (+ 5 V supply)**.
If the connections are faulty and there is a repair procedure (see **Technical Note 6015A, Repairing electrical wiring, wiring: precautions for repairs**) repair the wiring, otherwise change the wiring.
Check for a **+ 12 V feed** on the following connection:
– connection code **3FB**,
of the air flow sensor, **component code 799** and the **+ 12 V after relay supply**.
If the connections are faulty and there is a repair procedure (see **Technical Note 6015A, Repairing electrical wiring, wiring: precautions for repairs**) repair the wiring, otherwise change the wiring.
Check **for earth** on the following connection:
– connection code **3DU**,
of the air flow sensor, **component code 799** and the **computer earth**.
If the connections are faulty and there is a repair procedure (see **Technical Note 6015A, Repairing electrical wiring, wiring: precautions for repairs**) repair the wiring, otherwise change the wiring.

AFTER REPAIR	Repeat the conformity check from the start.

GETtheMANUALS.org

PR132 **CONTINUED**	

Check for **continuity, insulation and absence of interference resistance** on the connection between:
– connection code **3DV**,
between the air flow sensor, **component code 799** and the engine management computer, **component code 120**.
If the connections are faulty and there is a repair procedure (see **Technical Note 6015A, Repairing electrical wiring, wiring: precautions for repairs**) repair the wiring, otherwise change the wiring.
With the flow sensor **connected, the vehicle ignition on** and **the engine stopped**:
Check the voltage between connections **3DV** and **3DU** of the connector for component **799**:
– If the voltage is not **1 V ± 0.5**, replace the air flow sensor.

Air flow conversion formula from mg/cyl to kg/h:

$$\text{Air flow (kg/h)} = \frac{9 \times \text{air flow (mg/cyl)} \times \text{N engine (rpm)}}{50\,000}$$

Air flow conversion table from mg/cyl to kg/h:		
PR132 (Air flow, in mg/cyl)	**PR055 (Engine speed, in rpm)**	**PR132 (Air flow in kg/h)**
500	**728**	**65.54**
540	**851**	**82.72**
560	**907**	**91.43**

AFTER REPAIR	Repeat the conformity check from the start.

GETtheMANUALS.org

PR311	AIR FLOW SENSOR TEMPERATURE

NOTES	**There must be no present or stored faults.** Perform this fault finding procedure: – after finding an inconsistency in the parameter, – after a customer complaint (e.g. lack of power). (see **Technical Note wiring diagram, Vel Satis phase 2**) (see **Technical Note wiring diagram, Espace IV phase 2**)

ELECTRICAL CONFORMITY OF THE SENSOR:

With the air flow sensor disconnected, check **the insulation** in relation to **earth** of the connection between:
– connection code **3B**,
between the air flow sensor, **component code 799** and the engine management computer, **component code 120**.
If the connections are faulty and there is a repair procedure (see **Technical Note 6015A, Repairing electrical wiring, wiring: precautions for repairs**) repair the wiring, otherwise change the wiring.
Check **for** a **+ 12 V feed** on the **following connection**:
– connection code **3FB**,
between the air flow sensor, **component code 799** and the engine management computer, **component code 120**.
If the connections are faulty and there is a repair procedure (see **Technical Note 6015A, Repairing electrical wiring, wiring: precautions for repairs**) repair the wiring, otherwise change the wiring.

Measure the air temperature sensor resistance between connections **3DU** and **3B** of the connector for component **799**.
Replace the air temperature sensor if resistance is not between:

5,499 Ω ± 275	**at + 0 °C**
3,604 Ω ± 180	**at + 10 °C**
2,420 Ω ± 121	**at + 20 °C**

AFTER REPAIR	Repeat the conformity check from the start.

GETtheMANUALS.org

NOTES	Commands are run to check that certain components are working properly or to carry out a replacement.

SC001: Enter saved data
SC002: Enter injector codes
SC003: Save computer data
RZ007: Fault memory
AC029: High pressure circuit seal check.
AC031: Heating element no.3 relay
AC037: Preheating relay
AC047: OBD warning light
AC063: Heating element no. 1 relay
AC064: Heating element no. 2 relay
AC068: Injection fault warning light
AC069: Serious injection fault warning light
AC079: Static actuator test
AC092: Injector no. 1 test
AC093: Injector no. 2 test
AC094: Injector no. 3 test
AC095: Injector no. 4 test
AC096: Injector no. 5 test
AC097: Injector no. 6 test
AC228: GMV control circuit 1
AC229: GMV control circuit 2
AC230: GMV control circuit 3
AC241: Fuel flow regulator test 1 with low intensity
AC242: Flow regulator test 1 with high intensity
AC244: Fuel flow regulator test 2 with low intensity
AC244: Fuel flow regulator test 2 with high intensity

GETtheMANUALS.org

VP010: Write VIN

VP012: Inhibit electrical consumers

VP035: Cancel inhibit electrical consumers

VP036: Inhibit fuel supply

VP037: End fuel supply inhibition

GETtheMANUALS.org

SC001	WRITE SAVED DATA

NOTES	To use this command, first save the data with the **SC003 Save computer data** command. Writing is carried out after the computer has been reprogrammed or replaced. Engine stopped.

On the CLIP tool, select the **SC001 Write saved data** scenario.
Note:
If no files have been saved before, an entry error appears when command **SC001 Write saved data** is activated.
Validating this command writes the data saved using command **SC003 Save computer data**.
The data is as follows:
– The injector codes.
The data is used to configure the computer and prevent:
– engine malfunction after reprogramming or replacing the computer,
– incorrect interpretation of information provided by the Clip tool.

AFTER REPAIR	Repeat the conformity check from the start.

GETtheMANUALS.org

SC002	ENTER INJECTOR CODES

NOTES	This command is carried out after the replacement of one or more injectors. Engine stopped.

To enter this data, select command **SC002 Enter injector codes** on the CLIP tool.
Procedure to be followed:
– Read the 24 character alphanumeric codes engraved on the upper section of the injector bodies.
– Enter each injector code for the associated cylinder.
– **IMPORTANT**
Cylinder no. 1 is located at the timing end.
– Confirm the change of injector code configuration.
– When the command is completed, the modified codes appear in the current column.
– Check that the codes correspond to those read earlier.
If the codes entered appear in neither the **current** column nor the **desired** column, check the codes read and make sure the data has been entered correctly.
– Exit fault finding mode.
– Switch off the ignition and **wait for the end of the power-latch* (2 minutes)**.
– Switch the ignition back on and check for faults.
– **DF276 Injector code programming** should be stored.
If the **DF276** fault is still present, the command has not been executed correctly.
Start the procedure again and follow the instructions.
If the procedure is still not executed correctly, apply the following procedure:
A fault could cause **DF276** to be raised again and also incorrect confirmation of command **SC002**.
If the power latch* is not performed after the ignition is switched off, the injection computer will not store the new injector codes.
Switch off the ignition and check that the immobiliser warning light flashes **2 seconds** after switching the ignition off.
If the warning light flashes as soon as the ignition is switched off, the power latch* has not been executed and the command will not have been recognised.
If all these checks do not enable the command to be confirmed, contact the Techline.

* The immobiliser warning light will flash a few seconds after switching off the ignition.

AFTER REPAIR	Repeat the conformity check from the start.

GETtheMANUALS.org

SC003	SAVE COMPUTER DATA

NOTES	This save is performed before reprogramming or replacing the computer. Engine stopped.

On the CLIP tool, select the **SC003 Save computer data**.
Confirming this command saves the following vehicle-specific data:
– The injector codes.
This information will be saved on the CLIP tool.
After saving has finished, use the command **SC001 Enter saved data** to be able to set the new computer parameters, after programming and reprogramming.

AFTER REPAIR	Repeat the conformity check from the start.

GETtheMANUALS.org

AC029	HIGH PRESSURE CIRCUIT SEAL TEST

NOTES	None

Test condition:
– engine running at idling speed,
– engine coolant temperature greater than **60 °C**,
– automatic gearbox in neutral or park position,
– accelerator pedal signal **0%**,
– vehicle speed **0 mph**.
The test lasts **60 seconds**, the engine speed will reach **2000 rpm** and the rail pressure will reach **500 bar** minimum and **1450 bar** maximum.
Carry out a visual inspection of the high pressure injection circuit to detect any fuel leaks.
To interrupt the command, depress the accelerator pedal.
If it is not possible to reach the engine coolant temperature requested, run the command at the current engine temperature.
During this command, the message **Command finished** appears on the **diagnostic tool** after the command has lasted for **60 seconds**.
The test is carried out over **60 seconds** and it is normal to be able to see **PR008 Rail pressure setpoint** and **PR038 Rail pressure** change during this command.

AFTER REPAIR	Repeat the conformity check from the start.

GETtheMANUALS.org

AC031	HEATING ELEMENT NO. 3 RELAY

NOTES	**No fault should be present or stored:** Carry out this fault finding procedure in the event of a malfunction detected in the actuator control menu or a fault in the passenger compartment heating/demisting system. Refer to the **Wiring diagrams** Technical Note for the vehicle to locate the fuses and relays.

If heating element no. 3 relay does not operate during command **AC031 Heating element no. 3 relay**.
Check the connections of heating element no. 3 relay mounting.
Check the engine management computer connections.
Repair if necessary.

If the fault is still present, check as follows that this relay is controlled by the engine management computer:
– disconnect the heating element no. 3 relay, place the **50** Ω to **100** Ω resistor on its mounting in place of the coil and connect a voltmeter:
  positive terminal to **+ 12 V** battery,
  negative terminal on connection **3JAB** of the heating element no. 3 relay mounting.
– clear the fault and run command **AC031 Heating element no. 3 relay**,
– if the voltmeter shows the correct battery voltage, replace heating element no. 3 relay,
– if the voltmeter does not indicate the battery voltage, contact your Techline.

If the heating element no. 3 relay operates with command **AC031 Heating element no. 3 relay**, but there is still a fault with the passenger compartment heating/demisting. Check using the wiring diagram:
– the conformity of heating element no. 3 relay supply fuse,
– for **+ 12 V** battery feed on connection **3FB** of heating element no. 3 relay mounting,
– the conformity of the heating element no.3 relay coil: **91** Ω ± **9 at + 20 °C**,
– the conformity of the heating element resistor: less than **10** Ω,
– the presence of earth at the plenum chamber (heating element mounting),
– also check the level of the cooling circuit and that there are no leaks.
Carry out the necessary repairs.

AFTER REPAIR	Repeat the conformity check from the start.

GETtheMANUALS.org

AC037	PREHEATING RELAY

NOTES	**Special notes:** This command is only carried out if the fault or **DF144 Preheating relay control circuit group 1**, or **DF158 Preheating relay control circuit group 2** is present or stored and if no other fault is present. Refer to the **Wiring diagrams** Technical Note for the vehicle to locate the fuses and relays. (see **Technical Note wiring diagram, Vel Satis phase 2**) (see **Technical Note wiring diagram, Espace IV phase 2**)

Before applying the following fault finding procedure, check that the battery voltage is not below 12 V.
Step 1:
Using a multimeter fitted with a current clamp, group the 3 heater plug feed wires together, either side of the engine block.
Actuate the preheating relay via command **AC037 Preheating relay** and measure the current used by the heater plugs.
If the current consumed by each row is not between **18A** and **54A**, go to step 2.
Step 2:
Check the connections on the preheating unit, heater plugs and injection computer.
If the connections are faulty and there is a repair procedure (see **Technical Note 6015A, Repairing electrical wiring, wiring: precautions for repairs**) repair the wiring, otherwise change the wiring.
Next measure the **resistance** of the heater plugs.
Replace the faulty plugs, if the resistance is greater than **30 Ω per plug**.
Check for **continuity** and **absence of interference resistance** of the following connections:
– connection code **3SP**,
between the heater plug of **cylinder no. 1, component code 680** and the heater plug control unit, **component code 257**.
– connection code **3SR**,
between the heater plug of **cylinder no. 3, component code 682** and the heater plug control unit, **component code 257**.
– connection code **3ST**,
between the heater plug of **cylinder no. 5, component code 1260** and the heater plug control unit, **component code 257**.
If the connections are faulty and there is a repair procedure (see **Technical Note 6015A, Repairing electrical wiring, wiring: precautions for repairs**) repair the wiring, otherwise change the wiring.
Check for **continuity** and **absence of interference resistance** of the following connections:
– connection code **3SQ**,
between the heater plug of **cylinder no. 2, component code 681** and the heater plug control unit, **component code 257**.

AFTER REPAIR	Repeat the conformity check from the start.

GETtheMANUALS.org

AC037 **CONTINUED**	

– connection code **3SS**,
between the heater plug of **cylinder no. 4, component code 683** and the heater plug control unit, **component code 257**.
– connection code **3SU**,
between the heater plug of **cylinder no. 6, component code 1261** and the heater plug control unit, **component code 257**.
The resistance is equal to or greater than 10 MΩ.
If the connections are faulty and there is a repair procedure (see **Technical Note 6015A, Repairing electrical wiring, wiring: precautions for repairs**) repair the wiring, otherwise change the wiring.

Check the condition of the preheating unit supply fuses **FM18** and **FM19 (70A)**.
If the connections are faulty and there is a repair procedure (see **Technical Note 6015A, Repairing electrical wiring, wiring: precautions for repairs**) repair the wiring, otherwise change the wiring.
Then check for **+ 12 V** on the two connection codes **BP35** of the preheating relay for connectors A and B.
Check for **continuity** and **absence of interference resistance** of the following connections:
– connection code **3FF**,
– connection code **3HM**,
– connection code **3HL**,
between the engine management computer, **component code 120** and the back row heater plug control unit, **component code 257**.
If the connections are faulty and there is a repair procedure (see **Technical Note 6015A, Repairing electrical wiring, wiring: precautions for repairs**) repair the wiring, otherwise change the wiring.
Check for **continuity and the absence of interference resistance** on the following connection:
– the two connection codes **BP35**,
between the battery, **component code 107** and the front row heater plug control unit, **component code 257**.
If the connections are faulty and there is a repair procedure (see **Technical Note 6015A, Repairing electrical wiring, wiring: precautions for repairs**) repair the wiring, otherwise change the wiring.
If the fault is still present, replace the preheating unit.

AFTER REPAIR	Repeat the conformity check from the start.

GETtheMANUALS.org

AC063	HEATING ELEMENT NO. 1 RELAY

NOTES	**No fault should be present or stored:** Carry out this fault finding procedure in the event of a malfunction detected in the actuator control menu or a fault in the passenger compartment heating/demisting system. Refer to the **Wiring diagrams** Technical Note for the vehicle to locate the fuses and relays.

If the heating element no. 1 relay does not work during command **AC063 Heating element no. 1 relay**.
Check the connections of the heating element no. 1 relay mounting.
Check the engine management computer connections.
If the connections are faulty and there is a repair procedure (see **Technical Note 6015A, Repairing electrical wiring, wiring: precautions for repairs**) repair the wiring, otherwise change the wiring.

If the fault is still present, check as follows that this relay is controlled by the engine management computer:
– disconnect the heating element no. 1 relay, place the **50** Ω to **100** Ω resistor on its mounting in place of the coil and connect a voltmeter:
  positive terminal to **+ 12 V** battery,
  negative terminal on connection **3JA** of the heating element no. 1 relay mounting.
– clear the fault and run command **AC063 Heating element no. 1 relay**,
– if the voltmeter shows the correct battery voltage, replace the heating element no. 1 relay,
– if the voltmeter does not indicate the battery voltage, contact your Techline.

If the heating element no. 1 relay operates with command **AC063 Heating element no. 1 relay**, but there is still a fault with the passenger compartment heating/demisting.
Check using the wiring diagram:
– the conformity of the heating element fuse,
– for **+ 12 V** battery feed on connection **3FB** of the heating element no. 1 relay mounting,
– the conformity of the heating element no.1 relay coil: **90** Ω ± **9 at + 20** °**C**,
– the conformity of the heating element resistor: less than **10** Ω,
– the presence of earth at the plenum chamber (heating element mounting),
– also check the level of the cooling circuit and that there are no leaks.

Carry out the necessary repairs.

AFTER REPAIR	Repeat the conformity check from the start.

GETtheMANUALS.org

AC064	HEATING ELEMENT NO. 2 RELAY

NOTES	**No fault should be present or stored:** Carry out this fault finding procedure in the event of a malfunction detected in the actuator control menu or a fault in the passenger compartment heating/demisting system. Refer to the **Wiring diagrams** Technical Note for the vehicle to locate the fuses and relays.

If the heating element no. 2 relay does not operate correctly when command **AC064 Heating element no. 2 relay** is run:
Check the connections of heating element no. 2 relay mounting.
Check the engine management computer connections.
Repair if necessary.

If the fault is still present, check as follows that this relay is controlled by the engine management computer:
– disconnect the heating element no. 2 relay, place the **50** Ω to **100** Ω resistor on its mounting in place of the coil and connect a voltmeter:
  positive terminal to **+ 12 V** battery,
  negative terminal on **connection 3JAA** of the heating element no. 2 relay mounting.
– clear the fault and run command **AC064 Heating element relay no. 2**,
– if the voltmeter shows the correct battery voltage, replace heating element no. 2 relay,
– if the voltmeter does not indicate the battery voltage, contact your Techline.

If the heating element no. 2 relay operates with command **AC064 Heating element no. 2 relay**, but there is still a fault with the passenger compartment heating/demisting. Check using the wiring diagram:
– the conformity of the heating element fuse,
– for **+ 12 V** battery feed on connection **3FB** of the heating element no. 2 relay mounting,
– the conformity of the heating element no.3 relay coil: **91** Ω ± **9 at + 20** °**C**,
– the conformity of the heating element resistor: less than **10** Ω,
– the presence of earth at the plenum chamber (heating element mounting),
– also check the level of the cooling circuit and that there are no leaks.
Carry out the necessary repairs.

AFTER REPAIR	Repeat the conformity check from the start.

GETtheMANUALS.org

AC068	INJECTION FAULT WARNING LIGHT

NOTES	Perform this fault finding in the event of a malfunction detected in the actuator command menu. (see **Technical Note wiring diagram, Vel Satis phase 2**) (see **Technical Note wiring diagram, Espace IV phase 2**)

With the ignition on and engine stopped, the **SERVICE** injection fault warning light should flash and the message **Check injection** is displayed on the instrument panel.

Check the instrument panel connections.
Check the engine management computer connections.
If the connections are faulty and there is a repair procedure (see **Technical Note 6015A, Repairing electrical wiring, wiring: precautions for repairs**) repair the wiring, otherwise change the wiring.
Using the wiring diagram:
Check **the continuity and absence of interference resistance** of the following connections:
– connection code **133C**,
– connection code **133B**,
between the instrument panel **black connector** (RG), **component code 247** and the engine management computer, **component code 120**.
If the connections are faulty and there is a repair procedure (see **Technical Note 6015A, Repairing electrical wiring, wiring: precautions for repairs**) repair the wiring, otherwise change the wiring.
– Check for **+ 12 V** battery on connection **BP3A** of the instrument panel black connector (GR).
If the fault is still present, check that warning light is controlled by the injection computer as follows:
Disconnect the connector from the instrument panel and connect a voltmeter as follows:
– positive terminal on **+ 12 V**,
– negative terminal on connection **133B** of the instrument panel black connector (RG).
Activate the warning light with command **AC068 Injection fault warning light**.
● If the voltmeter shows the battery voltage, then check the instrument panel.
Carry out the necessary repairs.
● If the voltmeter does not indicate the battery voltage, contact your Techline.

AFTER REPAIR	Repeat the conformity check from the start.

GETtheMANUALS.org

AC069	SEVERE INJECTION FAULT WARNING LIGHT

NOTES	Perform this fault finding in the event of a malfunction detected in the actuator command menu. (see **Technical Note wiring diagram, Vel Satis phase 2**) (see **Technical Note wiring diagram, Espace IV phase 2**)

With the ignition on and the engine stopped, the **STOP** serious injection fault warning light should flash and the message **Injection fault: stop the engine** is displayed on the instrument panel.

Check the instrument panel connections.
Check the engine management computer connections.
If the connections are faulty and there is a repair procedure (see **Technical Note 6015A, Repairing electrical wiring, wiring: precautions for repairs**) repair the wiring, otherwise change the wiring.
Using the wiring diagram:
– check **the continuity and absence of interference resistance** on the following connections:
– connection code **133C**,
– connection code **133B**,
between the instrument panel **black connector** (RG), **component code 247** and the engine management computer, **component code 120**.
– Check for **+ 12 V** battery on connection **BP3A** of the instrument panel black connector (GR).
If the fault is still present, check that warning light is controlled by the injection computer as follows:
Disconnect the connector from the instrument panel and connect a voltmeter as follows:
– positive terminal on **+ 12 V**,
– negative terminal on connection **133B** of the instrument panel black connector (RG).
Activate the warning light using command **AC069**.
● If the voltmeter shows the battery voltage, then check the instrument panel.
Carry out the necessary repairs.
● If the voltmeter does not indicate the battery voltage, contact your Techline.

AFTER REPAIR	Repeat the conformity check from the start.

GETtheMANUALS.org

AC079	ACTUATOR STATIC TEST

NOTES	Ignition on, engine off.

This command prompts the appearance of faults on these actuators (if fault present) without starting the engine and it also configures the computer automatically.
The injection computer is going to carry out the following electrical checks:

- **inlet flap control solenoid valve,**
- **EGR valve,**
- **the two fuel flow regulators,**
- **the 6 injectors.**

AFTER REPAIR	Repeat the conformity check from the start.

GETtheMANUALS.org

AC092	INJECTOR NO. 1 TEST

NOTES	– Idling speed. – Before running the command, check the number of faults.

Test condition:
– engine running at idling speed,
– engine temperature greater than **80 °C**,
– automatic gearbox in neutral or park position,
– accelerator pedal signal **0%**,
– vehicle speed **0 mph**.
Command **AC092** inhibits the cylinder no. 1 injection command.
Command **AC092** may produce fault **DF059 Combustion misfire on cylinder 1**.
If **DF059** occurs during command **AC092**, stop the engine for **10 seconds**, start the engine again and continue the injector tests, if necessary.
This command can be run, if necessary, with the engine cold.

AFTER REPAIR	Repeat the conformity check from the start.

GETtheMANUALS.org

AC093	INJECTOR NO. 2 TEST

NOTES	– Idling speed. – Before running the command, check the number of faults.

Test condition:
– engine running at idling speed,
– engine temperature greater than **80 °C**,
– automatic gearbox in neutral or park position,
– accelerator pedal signal **0%**,
– vehicle speed **0 mph**.
Command **AC093** inhibits the cylinder no. 2 injection command.
Command **AC093** may produce fault **DF060 Combustion misfire on cylinder 2**.
If **DF060** occurs during command **AC093**, stop the engine for **10 seconds**, start the engine again and continue the injector tests, if necessary.
This command can be run, if necessary, with the engine cold.

AFTER REPAIR	Repeat the conformity check from the start.

GETtheMANUALS.org

AC094	INJECTOR NO. 3 TEST

NOTES	– Idling speed. – Before running the command, check the number of faults.

Test condition:
– engine running at idling speed,
– engine temperature greater than **80 °C**,
– automatic gearbox in neutral or park position,
– accelerator pedal signal **0%**,
– vehicle speed **0 mph**.
Command **AC094** inhibits the cylinder no. 3 injection command.
Command **AC094** may produce fault **DF061 Combustion misfire on cylinder 3**.
If **DF061** occurs during command **AC094**, stop the engine for **10 seconds**, start the engine again and continue the injector tests, if necessary.
This command can be run, if necessary, with the engine cold.

AFTER REPAIR	Repeat the conformity check from the start.

GETtheMANUALS.org

AC095	INJECTOR NO. 4 TEST

NOTES	– Idling speed. – Before running the command, check the number of faults.

Test condition:
– engine running at idling speed,
– engine temperature greater than **80 °C**,
– automatic gearbox in neutral or park position,
– accelerator pedal signal **0%**,
– vehicle speed **0 mph**.
Command **AC095** inhibits the cylinder no. 4 injection command.
Command **AC095** may produce fault **DF062 Combustion misfire on cylinder 4**.
If **DF062** occurs during command **AC095**, stop the engine for **10 seconds**, start the engine again and continue the injector tests, if necessary.
This command can be run, if necessary, with the engine cold.

AFTER REPAIR	Repeat the conformity check from the start.

GETtheMANUALS.org

AC096	INJECTOR NO. 5 TEST

NOTES	– Idling speed. – Before running the command, check the number of faults.

Test condition:
– engine running at idling speed,
– engine temperature greater than **80 °C**,
– automatic gearbox in neutral or park position,
– accelerator pedal signal **0%**,
– vehicle speed **0 mph**.
Command **AC096** inhibits the cylinder no. 5 injection command.
Command **AC096** may produce fault **DF063 Combustion misfire on cylinder 5**.
If **DF063** occurs during command **AC096**, stop the engine for **10 seconds**, start the engine again and continue the injector tests, if necessary.
This command can be run, if necessary, with the engine cold.

AFTER REPAIR	Repeat the conformity check from the start.

GETtheMANUALS.org

AC097	INJECTOR NO. 6 TEST

NOTES	– Idling speed. – Before running the command, check the number of faults.

Test condition:
– engine running at idling speed,
– engine temperature greater than **80 °C**,
– automatic gearbox in neutral or park position,
– accelerator pedal signal **0%**,
– vehicle speed **0 mph**.
Command **AC097** inhibits the cylinder no. 6 injection command.
Command **AC097** may produce fault **DF064 Combustion misfire on cylinder 6**.
If **DF064** occurs during command **AC097**, stop the engine for **10 seconds**, start the engine again and continue the injector tests, if necessary.
This command can be run, if necessary, with the engine cold.

AFTER REPAIR	Repeat the conformity check from the start.

GETtheMANUALS.org

AC228	GMV CONTROL CIRCUIT 1

NOTES	**No fault should be present or stored:** Perform this fault finding procedure if a malfunction is detected in the actuator command menu or after an engine cooling system or air conditioning fault.' Refer to the **Wiring diagrams** Technical Note for the vehicle to locate the fuses and relays concerned. (see **Technical Note wiring diagram, Vel Satis phase 2**) (see **Technical Note wiring diagram, Espace IV phase 2**)

Run command **AC228 GMV control circuit 1** and check visually that the cooling fan is turning. If this is not the case, carry out the following operations:
– check the condition of fuses **FM15 (60 A) and FM23 (60 A)**.
If the connections are faulty and there is a repair procedure (see **Technical Note 6015A, Repairing electrical wiring, wiring: precautions for repairs**) repair the wiring, otherwise change the wiring.
Check for **+ 12 V** on **connections BP71 and BP72** of the GMV relay unit.
If the connections are faulty and there is a repair procedure (see **Technical Note 6015A, Repairing electrical wiring, wiring: precautions for repairs**) repair the wiring, otherwise change the wiring.
Check for **continuity and the absence of interference resistance** on the following connection:
– connection code **3JN**,
between the **GMV relay unit, component code 1839** and the engine management computer, **component code 120**.
If the connections are faulty and there is a repair procedure (see **Technical Note 6015A, Repairing electrical wiring, wiring: precautions for repairs**) repair the wiring, otherwise change the wiring.
Check for **+ 12 V** on **connection codes 3AJG and 3AJH** of the GMV, **component code 188** when running command **AC228**.
If the connections are faulty and there is a repair procedure (see **Technical Note 6015A, Repairing electrical wiring, wiring: precautions for repairs**) repair the wiring, otherwise change the wiring.

AFTER REPAIR	Repeat the conformity check from the start.

GETtheMANUALS.org

AC229	GMV CONTROL CIRCUIT 2

NOTES	**No fault should be present or stored:** Perform this fault finding procedure if a malfunction is detected in the actuator command menu or after an engine cooling system or air conditioning fault.' Refer to the **Wiring diagrams** Technical Note for the vehicle to locate the fuses and relays concerned. (see **Technical Note wiring diagram, Vel Satis phase 2**) (see **Technical Note wiring diagram, Espace IV phase 2**)

Run command **AC229 GMV control circuit 2** and check visually that the cooling fan is turning. If this is not the case, carry out the following operations:
– check the condition of fuses **FM15 (60 A) and FM23 (60 A)**.
If the connections are faulty and there is a repair procedure (see **Technical Note 6015A, Repairing electrical wiring, wiring: precautions for repairs**) repair the wiring, otherwise change the wiring.
Check for **+ 12 V** on **connections BP71 and BP72** of the GMV relay unit.
Repair if necessary.
Check for **continuity and the absence of interference resistance** on the following connection:
– connection code **3JP**,
between the **GMV relay unit, component code 1839** and the engine management computer, **component code 120**.
If the connections are faulty and there is a repair procedure (see **Technical Note 6015A, Repairing electrical wiring, wiring: precautions for repairs**) repair the wiring, otherwise change the wiring.

Check for **+ 12 V** on **connection codes 3AJG and 3AJH** of the GMV, **component code 188** when running command **AC229**.
If the connections are faulty and there is a repair procedure (see **Technical Note 6015A, Repairing electrical wiring, wiring: precautions for repairs**) repair the wiring, otherwise change the wiring.

AFTER REPAIR	Repeat the conformity check from the start.

GETtheMANUALS.org

AC230	GMV CONTROL CIRCUIT 3

NOTES	**No fault should be present or stored:** Perform this fault finding procedure if a malfunction is detected in the actuator command menu or after an engine cooling system or air conditioning fault.' Refer to the **Wiring diagrams** Technical Note for the vehicle to locate the fuses and relays concerned. (see **Technical Note wiring diagram, Vel Satis phase 2**) (see **Technical Note wiring diagram, Espace IV phase 2**)

Run command **AC230 GMV control circuit 3** and check visually that the cooling fans are turning. If this is not the case, carry out the following operations:
check the condition of fuses **FM15 (60 A) and FM23 (60 A)**.
If the connections are faulty and there is a repair procedure (see **Technical Note 6015A, Repairing electrical wiring, wiring: precautions for repairs**) repair the wiring, otherwise change the wiring.
Check for **+ 12 V** on **connections BP71 and BP72** of the GMV relay unit.
Repair if necessary.
Check for **continuity and the absence of interference resistance** on the following connection:
– connection code **3AJD**,
between the **GMV relay unit, component code 1839** and the engine management computer, **component code 120**.
If the connections are faulty and there is a repair procedure (see **Technical Note 6015A, Repairing electrical wiring, wiring: precautions for repairs**) repair the wiring, otherwise change the wiring.

Check for **+ 12 V** on **connection codes 3AJG and 3AJH** of the GMV, **component code 188**, when running command **AC230 GMV control circuit 3**.
If the connections are faulty and there is a repair procedure (see **Technical Note 6015A, Repairing electrical wiring, wiring: precautions for repairs**) repair the wiring, otherwise change the wiring.

AFTER REPAIR	Repeat the conformity check from the start.

GETtheMANUALS.org

AC241	FUEL FLOW REGULATOR TEST 1 WITH LOW INTENSITY

NOTES	With the ignition on.

Test condition:
– With the ignition on.
Command **AC241** is used to control the fuel flow regulator no.1 operation.
Command **AC241** lasts **30 seconds** and makes the fuel flow regulator no. 1 oscillate with a low control intensity.
If there is no noise from the fuel flow regulator no. 1, run command **AC242 Fuel flow regulator test 1 with high intensity**.

AFTER REPAIR	Repeat the conformity check from the start.

GETtheMANUALS.org

AC242	FUEL FLOW REGULATOR TEST 1 WITH HIGH INTENSITY

NOTES	With the ignition on.

Test condition:
– With the ignition on.
Command **AC242** is used to control the fuel flow regulator no.1 operation.
Command **AC242** lasts **30 seconds** and makes the fuel flow regulator no. 1 oscillate with a high control intensity.
If there is no noise from fuel flow regulator no. 1, check the wiring of fuel flow regulator no. 1: apply the tests for fault **DF644 Fuel flow regulator circuit**.

AFTER REPAIR	Repeat the conformity check from the start.

GETtheMANUALS.org

AC243	FUEL FLOW REGULATOR TEST 2 WITH LOW INTENSITY

NOTES	With the ignition on.

Test condition:
– With the ignition on.
Command **AC243** is used to control the fuel flow regulator no.2 operation.
Command **AC243** lasts **30 seconds** and makes the fuel flow regulator no. 2 oscillate with a low control intensity.
If there is no noise from fuel flow regulator no. 2, run command **AC244 Fuel flow regulator test 2 with high intensity**.

AFTER REPAIR	Repeat the conformity check from the start.

GETtheMANUALS.org

AC244	FUEL FLOW REGULATOR TEST 2 WITH HIGH INTENSITY

NOTES	With the ignition on.

Test condition:
– With the ignition on.
Command **AC244** is used to control the fuel flow regulator no.2 operation.
Command **AC244** lasts **30 seconds** and makes fuel flow regulator no. 2 oscillate with a high control intensity.
If there is no noise from fuel flow regulator no. 2, check the wiring of fuel flow regulator no. 2: apply the tests for fault **DF644 Fuel flow regulator circuit**.

AFTER REPAIR	Repeat the conformity check from the start.

GETtheMANUALS.org

VP010	ENTER VIN

NOTES	Perform this configuration after replacing the computer.

Establish dialogue with the engine management computer. Select the **Parameters** screen. Select the line **VP010 Enter VIN**. Confirm the stages described in the scenario **SC001 Enter saved data**. End of procedure.
The VIN is reread in the **Identification** screen.

AFTER REPAIR	Repeat the conformity check from the start.

GETtheMANUALS.org

VP012	DISABLE ELECTRICAL CONSUMERS

NOTES	Under + APC.

This command inhibits electrical consumers.
Command **VP012**, deactivates preheating, the engine cooling fans and the heating elements.
Starting the engine or command **VP035 Cancel inhibit electrical consumers** stops command **VP012**.

AFTER REPAIR	Repeat the conformity check from the start.

GETtheMANUALS.org

VP035	CANCEL INHIBITION OF ELECTRICAL CONSUMERS

NOTES	Under + APC.

Command **VP035**, reactivates preheating, the engine cooling fans and the heating elements.

AFTER REPAIR	Repeat the conformity check from the start.

GETtheMANUALS.org

VP036	FUEL SUPPLY INHIBITION

NOTES	Ignition on, engine off.

This command locks the injectors by closing the fuel flow regulators so that it is impossible to start the engine.
Command **VP036** stops the fuel supply to the engine to check the cylinder compressions without worrying about fuel splashback.
Run command **VP036 Inhibit fuel supply** and start the vehicle.
Check the cylinder compressions values, then once these have finished, run the injectors again using command **VP037 Cancel inhibit fuel supply** or cut the supply with a power-latch*.

* The immobiliser warning light will flash a few seconds after switching off the ignition.

AFTER REPAIR	Repeat the conformity check from the start.

GETtheMANUALS.org

VP037	CANCEL FUEL SUPPLY INHIBITION

NOTES	Ignition on, engine off.

Command **VP037** reactivates injector fuel supply.

AFTER REPAIR	Repeat the conformity check from the start.

GETtheMANUALS.org

NOTES	Only check the customer complaint after performing a complete check with the **diagnostic tool**.

NO DIALOGUE WITH ENGINE MANAGEMENT COMPUTER	**ALP 1**
STARTING FAULT OR STARTING IMPOSSIBLE	**ALP 2**
ENGINE BUCKING	**ALP 3**
LACK OF POWER/PERFORMANCE	**ALP 4**
EXCESSIVE FUEL CONSUMPTION	**ALP 5**
EXCESSIVE OIL CONSUMPTION	**ALP 6**
ROUGH IDLE	**ALP 7**
OVERHEATING	**ALP 8**
NO HEATING	**ALP 9**
EXTENSIVE BLACK FUMES FROM EXHAUST	**ALP 10**
HEAVY WHITE SMOKE FROM EXHAUST	**ALP 11**
HEAVY BLUE SMOKE FROM EXHAUST	**ALP 12**

GETtheMANUALS.org

ALP1	No dialogue with engine management computer

NOTES	In the event of a fault, perform a **multiplex network** test using the **diagnostic tool**. (see **Wiring Diagram Technical Note, Vel Satis phase 2**) (see **Wiring Diagram Technical Note, Espace IV phase 2**)

Check that the tool is not the cause of the fault by trying to establish dialogue with a computer on another vehicle.
If the tool is not at fault, and dialogue cannot be established with any other computer on the same vehicle, it may be that a faulty computer is disrupting **line K**.
Trace which one through a process of elimination, successively disconnecting each computer.

Check for the presence and condition of the engine fuses in the engine fuse and relay box, refer to the **Wiring Diagrams Technical Note** for the vehicle.
Check the computer power supply on the connector side.
Check the earth connections.
Check the computer connector (crimping of wires to terminals, and condition of terminals).
If the connections are faulty and there is a repair method (see **Technical Note 6015A, Repairing electrical wiring, Wiring: Precautions for repair**) repair the wiring, otherwise replace the wiring.

Check the supply to the diagnostic socket **from + after ignition feed** on the following connections:
– connection code **BCP4**,
– connection code **AP10**,
on the diagnostic socket, **component code 225**.
Check **the continuity and absence of interference resistance of the earths** on the following connections:
– connection codes **MA** and **NAP**,
on the diagnostic socket, **component code 225**.
Check the **insulation, continuity and the absence of interference resistance** on the following connection:
– connection code **HK**,
between the diagnostic socket connector, **component code 225** and the engine management computer, **component code 120**.
If the connections are faulty and there is a repair method (see **Technical Note 6015A, Repairing electrical wiring, Wiring: Precautions for repair**) repair the wiring, otherwise replace the wiring.

If dialogue is still impossible after these checks, replace the engine management computer.

AFTER REPAIR	Carry out a road test, followed by a check with the **fault finding tool**.

GETtheMANUALS.org

ALP2	starting difficult or impossible

NOTES	In the event of a fault, perform a **multiplex network test** using the diagnostic tool, then if the test is OK, apply the conformity check before any operation on the diesel injection system.

Start button pressed.

Does the engine operate?

NO →

Check that the starter operating conditions are satisfied:
– Gear lever in position **P** or **N**.
– **ET003 Immobiliser: Inactive** (if Active: run fault finding on the UCH).
If okay, check the starter circuit:
– + 12 V feed and earth.
1. If the power-fuse is switched off:
   – Manually check the engine rotation (if the engine does not rotate, check the lower engine).
   – Check that the starter has not short circuited (if it has, replace the starter).
2. If the starter clicks:
   – Manually check the engine rotation (if the engine does not rotate, check the lower engine).
   – Check that the starter has not short circuited (if it has, replace the starter).

YES ↓

During the starter phase, note or check the following parameters:
– **PR038 Rail pressure,**
– **PR132 Air flow,**
– **PR055 Engine speed,**
– **PR074 Battery voltage.**

↓

During the starter phase, is the engine speed less than **240 rpm**?

YES → **A**

NO ↓

During the starter phase, is the rail pressure greater than **170 bar**?

NO → **B**

YES ↓

During the starter phase, does the air flow differ from zero kg/h?

NO → **C**

YES ↓

Measure the compressions.
If the compressions are less than 20.4 bar.
Check:
– Valve clearance.
– Valve/cylinder sealing.

AFTER REPAIR	Carry out a road test, followed by a check with the **fault finding tool**.

GETtheMANUALS.org

ALP2 CONTINUED	

A

Voltage < 9.5 V:
– Check the condition of the battery.
– Check the condition of the starter motor.
– Check the starter wiring harness.
– Check the starter and engine earths (visually and by removing).

Voltage > 9.5 V:
– Manually check the engine rotation (if the engine does not rotate, check the lower engine).
– Check the timing adjustment.
– Check that no fluid is present in the cylinder.

B

– Is there fuel in the tank?
– Check the conformity of the fuel. Run **test 12 Diesel fuel conformity check**.
– Look for possible external leaks.
– Is an injector jammed open?
– Replace the high pressure pump if there is no pressure.

C

– Run **test 4 Air inlet circuit and turbocharging check**.
– Visually check whether the damper valve is closed.
– Check the air flow sensor wiring.
– If the wiring is correct, replace the air flow sensor.

AFTER REPAIR	Carry out a road test, followed by a check with the **fault finding tool**.

GETtheMANUALS.org

ALP3	Engine hesitation

NOTES	In the event of a fault, perform a **multiplex network test** using the **diagnostic tool**, then if the test is OK, apply the conformity check before any operation on the diesel injection system.

Identify the conditions under which the fault occurs (talk to the customer):
– Warm or cold engine.
– Changing gear.
– Vehicle speed.
– Engine speed.
– Accelerator pedal depressed.

Look for possible vibrations:
– Check the condition and tightness of the engine mountings.
– Check the condition and tightness of the engine tie-bars.
– Check the condition of the crankshaft pulley.
– Check the axles.
Repair if necessary.

Using the **diagnostic tool**:
Carry out a road test and note the parameters for the conditions under which the engine cut-outs appear.
Interpret the results of the following parameters:
– **PR055 Engine speed,**
– **PR132 Air flow,**
– **PR038 Rail pressure,**
– **PR041 Turbocharging pressure,**
– **PR030 Accelerator pedal position,**
– **PR220 EGR valve OCR*,**
– **PR767 Turbocharger position,**
– **PR766 Turbocharger position setpoint,**
– **PR017 Fuel flow.**

OCR*: Opening Cyclic Ratio.

AFTER REPAIR	Carry out a road test, followed by a check with the **fault finding tool**.

GETtheMANUALS.org

ALP3 CONTINUED	

If there is a significant variation in one or more parameters, carry out the following operations:
A. If there is significant variation in the injector rail pressure:
- Check the low pressure circuit:
  - Run **test 3 Low pressure circuit check**.
- Check the high pressure pump:
  - Run **test 11 High pressure pump**.
- Check the injectors:
  - Run **test 10 Poor injector operation**.
  - Run command **AC029 High pressure circuit sealing test**.
- Replace the injector rail pressure sensor, **component code 1032** if the injector rail pressure when cold is different from the injector rail pressure when hot, under + after ignition feed.
- Run commands **AC241 Test flow regulator 1 with low intensity and AC243 Test flow regulator 2 with low intensity**.
- If the fault is still present, replace the injection pump (see **MR 402-1 or MR 405-1, 13B, Engine and peripherals**).

B. If there is significant variation in the air flow/EGR/turbocharger:
- Check the turbocharging circuit:
  - Run **test 4 Air inlet circuit and turbocharging check**.
  - Run **test 7 Variable geometry turbocharger command**.

AFTER REPAIR	Carry out a road test, followed by a check with the **fault finding tool**.

GETtheMANUALS.org

ALP4	Lack of power/performance

NOTES	In the event of a fault, perform a **multiplex network test** using the **diagnostic tool**, then if the test is OK, apply the conformity check before any operation on the diesel injection system.

IMPORTANT
In the event of the engine overheating, the computer deliberately limits engine power without the warning light coming on, see the interpretation of fault **DF721 Engine overheating**.
● Please observe the cleanliness guidelines and safety advice.

Lack of power with smoke — **NO** → (A)

YES ↓

Check the entire air circuit:
– Run **test 4 Air inlet circuit and turbocharging check**.
Ensure that the correct fuel is being used.
– Run **test 12 Diesel fuel conformity check**.
– Run **test 3 Low pressure circuit check**.
Check the high pressure pump:
– Run **test 11 High pressure pump**.
Check the condition of the injectors:
– Run **test 10 Poor injector operation**.
– Run command **AC029 High pressure circuit sealing test**.
– Replace the injector rail pressure sensor, **component code 1032** if the injector rail pressure when cold is different from the injector rail pressure when hot, under + after ignition feed.
Repair if necessary.

Measure the compressions.

AFTER REPAIR	Carry out a road test, followed by a check with the **fault finding tool**.

GETtheMANUALS.org

ALP4 CONTINUED	

Check the high pressure pump: – Run **test 11 High pressure pump**. Repair if necessary.
Check the condition of the injectors: – Run **test 10 Poor injector operation**. Repair if necessary.
Check the condition of the air flow sensor: – Run **Test 5 Air flowmeter**. Repair if necessary.
Check the condition of the turbocharger: – Run **test 7 Variable geometry turbocharger control** and **test 8 Turbocharger rotating part**. Repair if necessary.
Check the condition of the exhaust system: – Run **test 1 Exhaust system check**. Repair if necessary.
Apply the interpretation of **AC029 High pressure circuit sealing test**. Repair if necessary.
Measure the compressions.

AFTER REPAIR	Carry out a road test, followed by a check with the **fault finding tool**.

GETtheMANUALS.org

ALP5	Excessively high fuel consumption

NOTES	In the event of a fault, perform a **multiplex network test** using the **diagnostic tool**, then if the test is OK, apply the conformity check before any operation on the diesel injection system.

Check conformity of the tyres and their pressure.
Check that the vehicle is not equipped with external devices affecting its aerodynamics.
Look for possible fuel leaks: – Run **test 3 Low pressure circuit check**. Repair if necessary. – Run command **AC029 High pressure circuit sealing test**. During this command, check for possible leaks in the high pressure circuit. Repair if necessary.
Refer to **ALP4 Lack of power/performance**.

AFTER REPAIR	Carry out a road test, followed by a check with the **fault finding tool**.

GETtheMANUALS.org

ALP6	Excessive oil consumption

NOTES	In the event of a fault, perform a **multiplex network test** using the diagnostic tool, then if the test is OK, apply the conformity check before any operation on the diesel injection system.

Confirm the excessive oil consumption (see **MR 402-1 or MR 405-1, 10A, Engine and peripherals**)
Check for possible external leaks.
Check the air circuit: – the condition of the air filter, – run **test 4 Air inlet circuit and turbocharging check**.
Check that the turbocharger operates correctly. Run **test 8 Turbocharger rotating part**.
Check for any possible blocking in the oil vapour rebreathing system. Check the condition of the rebreathing valve (see **MR 402-1 or MR 405-1, 14A, Engine and peripherals**).
Check the condition of the heater plugs. Measure the engine compressions: If the compressions are less than **20.4 bar**. Check: – Cylinder sealing. – Valve stem sealing.

AFTER REPAIR	Carry out a road test, followed by a check with the **fault finding tool**.

GETtheMANUALS.org

ALP7	Rough idle

NOTES	In the event of a fault, perform a **multiplex network test** using the **diagnostic tool**, then if the test is OK, apply the conformity check before any operation on the diesel injection system.

Check that the accessories belt-driven components operate (alternator, air conditioning compressor, etc.).
Check the consistency of parameter **PR064 Coolant temperature**. Repair if necessary.
Using the **diagnostic tool**, check the following parameters: **PR364 Cylinder no. 1 fuel flow correction,** **PR405 Cylinder no. 2 fuel flow correction,** **PR406 Cylinder no. 3 fuel flow correction,** **PR365 Cylinder no. 4 fuel flow correction,** **PR407 Cylinder no. 5 fuel flow correction,** **PR408 Cylinder no. 6 fuel flow correction.** If one of the parameters is not correct, run **test 10: Poor injector operation**. Replace or repair, if necessary.
Measure or note the injector rail pressure with parameter **PR038 Rail pressure** during the rough idle phases, the rail pressure should have stable values for a stabilised engine speed, and the rail pressure variation should not exceed **± 40 bar**.
Check the condition of the engine by measuring the cylinder compression with the special tool. The compression values recorded for each cylinder must be the same. – the minimum compression limit must not be less than **20.4 bar**, – the maximum pressure difference between two cylinders must not be greater than **2 bar**, – If the compression test reveals a cylinder fault, carry out the necessary repairs.
Check the timing adjustment (see **MR 353, 11A, Timing belt**).

AFTER REPAIR	Carry out a road test, followed by a check with the **fault finding tool**.

GETtheMANUALS.org

ALP8	Overheating

NOTES	In the event of a fault, perform a **multiplex network test** using the **diagnostic tool**, then if the test is OK, apply the conformity check before any operation on the diesel injection system.

Check using commands **AC228 Fan assembly command 1, AC229 Fan assembly command 2** and **AC230 Fan assembly command 3** that the three cooling fan assembly commands operate correctly. Repair if necessary.
Refer to **Technical Note 3175A, Cooling system**.
Engine running: Check the thermostat opens correctly (start of opening **82˚C ± 4.1**). For an engine coolant temperature greater than **85˚C**, the bottom hose of the cooling radiator should not be cold; replace the thermostat if necessary.
Check that the water pump is operating correctly by checking the presence of a coolant fluid return flow from the expansion bottle. In the event of a fault, check for any possible clogging in the expansion bottle return or that the hoses have been reversed before considering a fault in the water pump.
Compare the temperature values given by the injection coolant temperature sensor, **component code 244** and the value given by an external temperature sensor. If the values are inconsistent: Check the wiring and repair or replace the coolant temperature sensor.
If the fault is still present, rinse the cooling circuit and check that the radiator is not clogged. Clean the front of the radiator with a high pressure cleaner to remove any dirt from the radiator fins. Replace the expansion bottle cap.

AFTER REPAIR	Carry out a road test, followed by a check with the **fault finding tool**.

GETtheMANUALS.org

ALP9	No heating

NOTES	In the event of a fault, perform a **multiplex network test** using the diagnostic tool, then if the test is OK, apply the conformity check before any operation on the diesel injection system.

Check that the engine does reach its operating temperature during motorway driving.
Check that the thermoplungers operate correctly (only for Vel Satis). Check their resistances and check that the 3 thermoplunger relays are supplied using the following commands: **AC063 Thermoplunger no.1 relay,** **AC064 Thermoplunger no.2 relay,** **AC031 Thermoplunger no.3 relay.** In the event of faults, check the operation of the thermoplunger relays, check the connection between the relay coils and the injection computer, check the supply at the relay terminals, and check the **continuity** of the power lines between the thermoplungers and their relays.
Engine cold or stopped for at least **6 hours**. Compare the temperature values given by the injection coolant temperature sensor and the value given by an external temperature sensor. If the values are inconsistent: Check the wiring and repair or replace the coolant temperature sensor.
If the value supplied by the injection coolant temperature sensor is correct, replace the thermostat.
Refer to **Technical Note 3175A, Cooling system, ALP7 There is no heating inside the vehicle**.

AFTER REPAIR	Carry out a road test, followed by a check with the **fault finding tool**.

GETtheMANUALS.org

ALP10	Heavy black smoke from exhaust

NOTES	If the vehicle has not been used for a long time, let the engine reach its operating temperature and, after first checking the coolant fluid level, carry out a road test.

If there is a lack of power in addition to the smoke, Refer to **ALP4 Lack of power/performance**.
Otherwise, carry out **test 10 Poor injector operation**.

AFTER REPAIR	Carry out a road test, followed by a check with the **fault finding tool**.

GETtheMANUALS.org

ALP11	Heavy white smoke from exhaust

NOTES	If the vehicle has not been used for a long time, let the engine reach its operating temperature and, after first checking the coolant fluid level, carry out a road test.

Check with the customer that the vehicle has not overheated recently.
Check the coolant fluid level; a significant drop may be due to a leak in the cooling system or excessive fluid consumption by the engine at the cylinder head gaskets (apply **Technical Note 3175A, Cooling system, ALP3 Release of exhaust smoke, white smoke, warm engine**).
Check the EGR valve cooler (for fluid inside the EGR pipe).
White smoke released from exhaust without water consumption: Make sure that there is no water in the diesel filter. Check the conformity of the fuel. Run **test 12 Diesel fuel conformity check**. Clean if necessary. Carry out a road test.
Otherwise, the smoke is related to specific driving conditions (mountain driving, traffic jams or prolonged idling).

AFTER REPAIR	Carry out a road test, followed by a check with the **fault finding tool**.

GETtheMANUALS.org

ALP12	Heavy blue smoke from exhaust

NOTES	If the vehicle has not been used for a long time, let the engine reach its operating temperature and, after first checking the coolant fluid level, carry out a road test.

Check the oil level:
If the level is too high, remove the excess diesel fuel or oil.
Check that there is no diesel fuel in the oil; remove the excess.
If the level is too low,
Refer to **ALP6 Excessive oil consumption**.

Check that the oil breather pipes are not crushed or clogged.

Remove the inlet hose from the turbocharger inlet and outlet.
Check that there is not a large quantity of oil in the turbocharger or the inlet hoses.
– A large quantity of oil in the turbocharger inlet hose is due to extensive oil evacuation via the oil breather (engine "sealing ring" wear or breather clogged, etc.),
– A large quantity of oil in the turbocharger outlet hose indicates failure of the turbine shaft sealing ring. Replace the turbocharger if necessary.
– If the inlet system is clean, a small quantity of oil deposited on the walls of the inlet hoses is acceptable. The oil consumption is undoubtedly due to an engine internal failure, e.g. valve stem seal, oil scraper ring, etc.

AFTER REPAIR	Carry out a road test, followed by a check with the **fault finding tool**.

GETtheMANUALS.org

EXHAUST SYSTEM CHECK → TEST1

LOW PRESSURE CIRCUIT TEST → TEST3

TURBOCHARGING AND AIR INLET CIRCUIT TEST → TEST4

AIR FLOW SENSOR → TEST5

VARIABLE GEOMETRY TURBOCHARGER CONTROL → TEST7

ROTATING PART OF TURBOCHARGER → TEST8

POOR INJECTOR OPERATION → TEST10

HIGH PRESSURE PUMP → TEST11

DIESEL FUEL CONFORMITY CHECK → TEST12

GETtheMANUALS.org

TEST1	Exhaust system check

Engine stopped: Check that the silencer outlet is not blocked. Repair or replace the silencer, if necessary.

↓

Check the seal of the exhaust manifold on the contact surface between the turbocharger and the exhaust manifold.
Is the seal in order?

NO → Repair or replace the faulty part.

YES

↓

Loosen the catalytic pre-converter at the turbocharger outlet.
Place a wooden block between the two parts.
Start the vehicle and check if the engine runs better.
Is the engine running normally?

NO → The exhaust pipe is correct.
Restart fault finding.

YES

↓

Retighten the catalytic pre-converter.
Loosen and decouple or cut the catalytic converter at the catalytic pre-converter outlet. Place a wooden block between the two parts, if necessary.
Start the vehicle and check if the engine runs better.
Is the engine running normally?

NO → Replace the catalytic pre-converter.

YES

↓

(A)

GETtheMANUALS.org

TEST1 CONTINUED	

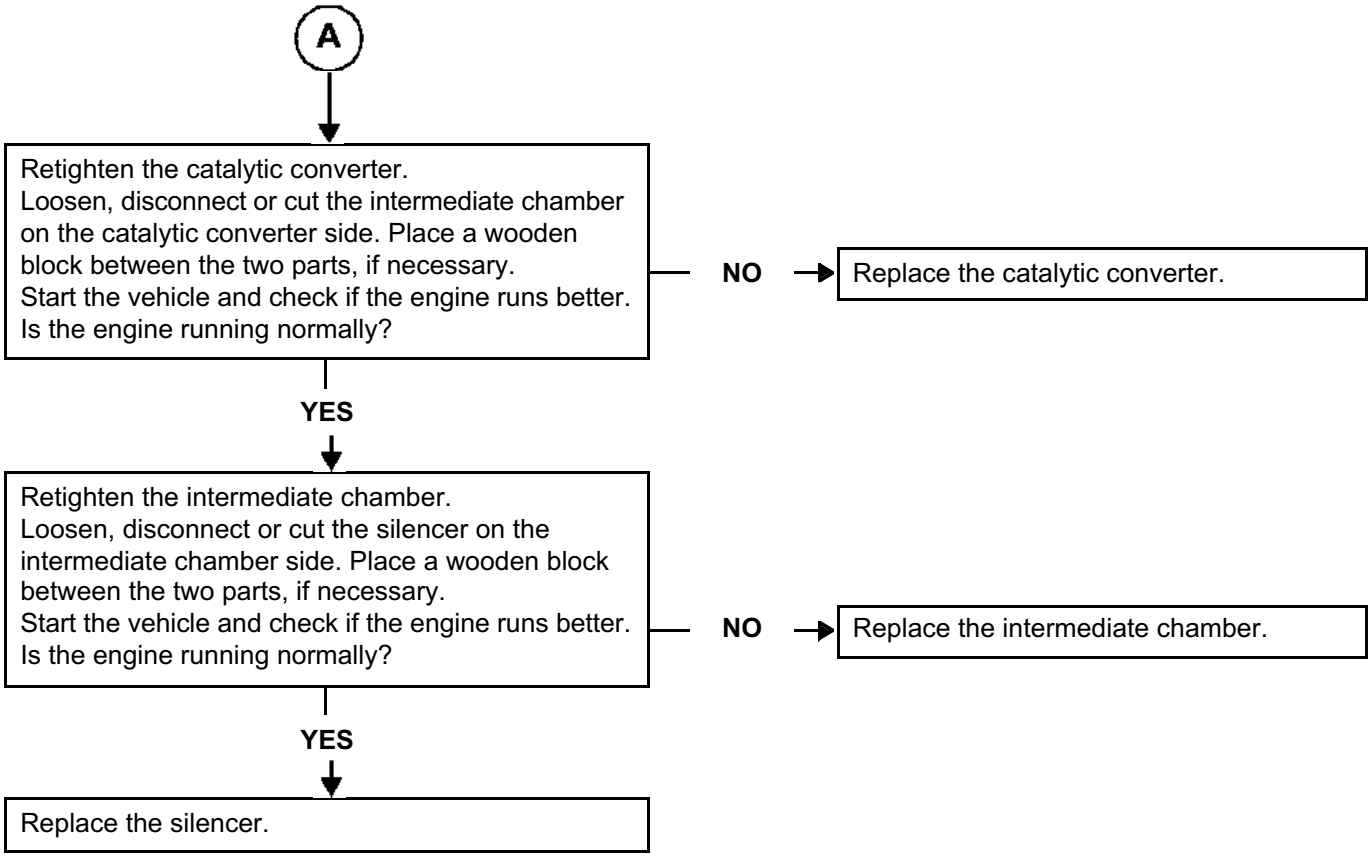

GETtheMANUALS.org

TEST3	Low pressure circuit check

Check the conformity of the fuel:
– Apply **test 12 Diesel fuel conformity check**.
If the diesel fuel is not correct:
– Replace the diesel fuel.
– Change the diesel filter.
– Bleed the low and high pressure diesel circuit.

↓

Check the condition of all the low pressure diesel pipes from the tank to the injection pump (in particular, that the pipes are not being crushed).

↓

Check the condition of the priming bulb, and that it is working properly. Perform repairs if necessary and continue the test.

↓

If the fault is still present with a low fuel level, check the consistency of the actual fuel level and that indicated on the instrument panel.
– The transfer pump is supplied via a venturi pipe mounted underneath it.
Check that the opening of the venturi is not blocked by dirt contained in the fuel tank.
Check the priming of the low pressure diesel circuit.

↓

Check the fuel filter:
– Conformity of the fuel filter (correct part number and RENAULT filter).
– Positioning and amount of clogging in the filter element.
– Positioning and condition of the seals.

↓

GETtheMANUALS.org

TEST3 CONTINUED	

Supplying the injection system with fuel from an additional tank.
This operation aims to detect possible faults in the low pressure supply system of a vehicle by replacing it entirely with an additional tank.
Mode:
– Disconnect the diesel fuel supply pipe at the fuel filter inlet and seal it with a plug.
– Connect a tube to the fuel filter inlet and insert the other end into a **clean** container which is approximately 5 litres in volume.
– Disconnect the diesel return pipe to the injector and high pressure pump outlet union, and use a plug to block it.
– Connect a transparent pipe to the injector and high pressure pump outlet union, and insert the other end into the container.
– Fill the container with **clean** diesel fuel.
– Start the engine and let the system drain itself of its air (there must not be any air bubbles in the return pipe).

Is the customer complaint still present?

YES → Low pressure circuit correct.
Reconnect the different low pressure circuit pipes and restart fault finding.

NO

Are the low pressure circuit connections in order and in good condition?

NO → Carry out the necessary repairs.
Low pressure circuit correct.
Reconnect the different low pressure circuit pipes and restart fault finding.

YES

Low pressure circuit correct.
Restart fault finding.
END OF TEST.

GETtheMANUALS.org

TEST4	Turbocharging and air inlet circuit check

Engine stopped: Check the low and high pressure air circuits for **leaks** (air leaks in or out, upstream or downstream of the turbocharger).

→ Check the parts that are abnormally greasy of the circuit and reveal a lack of tightness.
Check:
– the condition and fitting of the ducts (foreign bodies, clogged, disconnected, pinched, broken, holed, cut, tightness of the mounting bolts, etc.).
– the present and tightening of the clamps.
– the turbocharger pressure sensor is mounted correctly on the manifold.
– The pipes and the take-off point between the air duct and the turbocharging sensor.
Carry out the necessary repairs.

Checking the air filter.

→ Check:
– That the air filter unit inlet and outlet are not blocked.
– That air filter unit is in good condition and is fitted correctly (not dislodged, broken, pierced; condition and positioning of the foam, etc.).
– The cleanliness, conformity and the absence of deformation of the filter element.
– The air flowmeter: run **test 5 Air flowmeter**.

Check:
– the condition of the damper valve (damper),
– the condition of the swirl flaps,
– the tightness of the mounting bolts,
Carry out the necessary repairs.
Replace if necessary.

→ Carry out a visual inspection of the EGR circuit sealing.
Replace if necessary.

Check the exhaust: run **test 1 Exhaust pipe check**.
Carry out the necessary repairs.

→ Check the condition of the intercooler:
– clogging,
– leaks (vehicle stationary, stabilise the engine speed between 3500 rpm and 4000 rpm and check that there are no leaks).
Replace if necessary.

→ Check that the take-off point for the turbocharging pressure sensor is not blocked.
Replace if necessary.
END OF TEST.

GETtheMANUALS.org

TEST5	Air flow sensor

Contamination of the grille
Visual inspection: remove the flowmeter. There should be no foreign bodies in the grilles (see illustration **no. 110734**).
Do not clean the grilles using compressed air or by any other method: this may damage the sensors and create variations from the values displayed on the CLIP tool.
Check the air circuit sealing upstream of the air flowmeter: ducts and air filter unit disconnected or pierced, presence of seals.
Replace the air flowmeter if necessary and clean upstream of this, if necessary.

↓

Damage to electrical components
Visual inspection: remove the flow sensor - the components should not be broken.
Replace the air flowmeter if necessary.

↓

Oxidation of the electrical components
Visual inspection: remove the air flow sensor connector, there should not be any green deposits on the electrical components.
Replace the air flowmeter if necessary.

↓

Clogging of the air flowmeter
Test:
- Check the conformity values, with a warm engine (coolant temperature: **80˚C**).
- During the first 30 seconds after starting.
- Engine speed: idling.
- Air temperature between **30 and 70˚C**.
- **PR132 Air flow: 23 kg/h ± 3.**
- **PR220 EGR valve OCR*: 45 ± 10%.**

– Apply the procedure for **DF056 Air flow sensor circuit** for the checks on the air flowmeter.
Replace the air flowmeter if necessary.
END OF TEST.

* OCR = Opening Cycle Ratio.

GETtheMANUALS.org

TEST5 CONTINUED	

Contamination of the grille

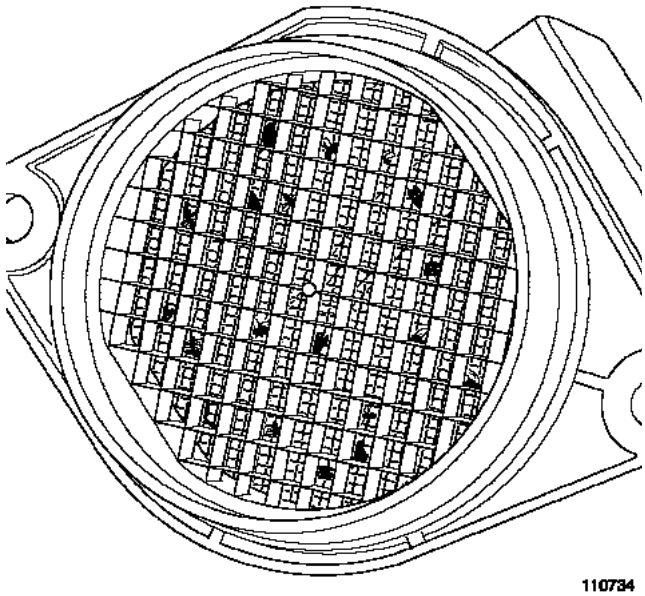

GETtheMANUALS.org

TEST7	Variable geometry turbocharger control

Start the engine and check that:
– the **PR767 Turbocharger position** changes and that it follows **PR766 Turbocharger position setpoint**,
– the variable geometry control moves easily.

↓

Does the variable geometry control move easily? — **NO** → Replace the turbocharger.

YES

↓

Stop the engine and check that:
– the **PR767 Turbocharger position** changes and that it follows **PR766 Turbocharger position setpoint**,
– the variable geometry control moves easily.

↓

Does the variable geometry control move easily? — **NO** → Replace the turbocharger.

YES

↓

Continue the turbocharger test with **test 8 Rotating part of turbocharger**.

GETtheMANUALS.org

TEST8	Rotating part of a turbocharger

With the engine cold and stopped, remove the air inlet duct from the turbocharger; check manually if the shaft of the turbine and of the compressor turns.

Does the shaft turn?

NO → Replace the turbocharger.

Seizing of the turbocharger may be caused by poor lubrication of the bearings. Check the lubrication circuit for any blockage and check the engine oil pressure. Apply the procedure described in **Technical Note 3938A** which is applicable to this engine.

YES

Visually inspect the condition of the compressor wheel and the turbine wheel (see illustrations no. 110737 and no. 110738).
Are the wheels in good condition?

NO → Replace the turbocharger.
Apply the procedure described in **Technical Note 3938A** which is applicable to this engine.

YES

Check the axial clearance of the wheels by hand (see illustration no. 110880).
The significant end float is approximately 2 mm.
Does the turbocharger have too much play in the shaft?

YES → If the rotating section is broken:
Apply the procedure described in **Technical Note 3938A** which is applicable to this engine.
IMPORTANT
Risk of destroying the new turbocharger and the engine if the air circuit is not cleaned and the oil and its filter are not replaced.

NO

The rotating section is in order.
Is there oil in the exhaust?

NO → **END OF TEST.**

YES

Replace the catalytic pre-converter.

Information:
The operating play of the turbocharger bearings is approximately 25 µm (micrometers or microns) between the shaft of the turbocharger and the internal mating face of the bearings and 75 µm between the exterior part of the bearings and the bearing housing.
Risks:
In the event of destruction of the turbocharger bearings, the steel and bronze swarf from this destruction are evacuated through the turbocharger oil to the engine's oil sump. The swarf can, consequently, be returned to the oil circuit via the oil pump, then cause widespread contamination of the engine oil circuit. This causes abnormal wear on the crankshaft bearing bushings, the con rod bearing shells and the camshafts, etc.
In the event of the compressor wheel breaking, parts of the blades may be found in the intercooler or in the air circuit ducts. The turbine wheel could easily be found in the catalytic converter.

GETtheMANUALS.org

TEST8 CONTINUED 1	

Deformed, twisted blade ("soft" foreign body)

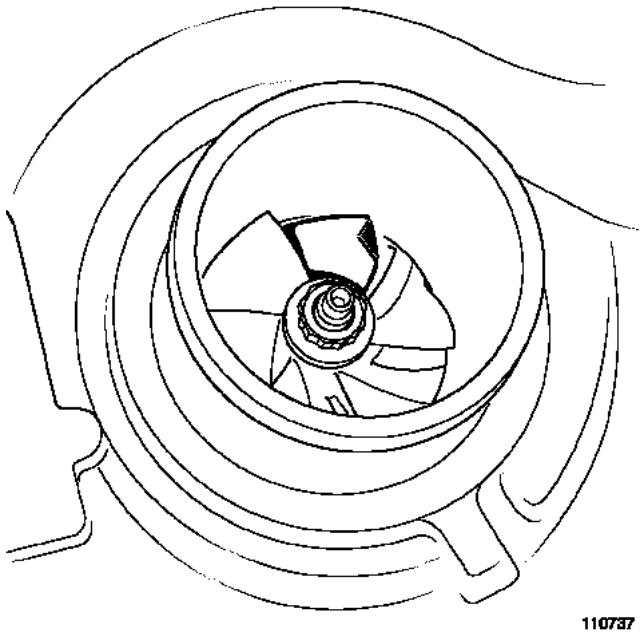

Broken blades ("hard" foreign body)

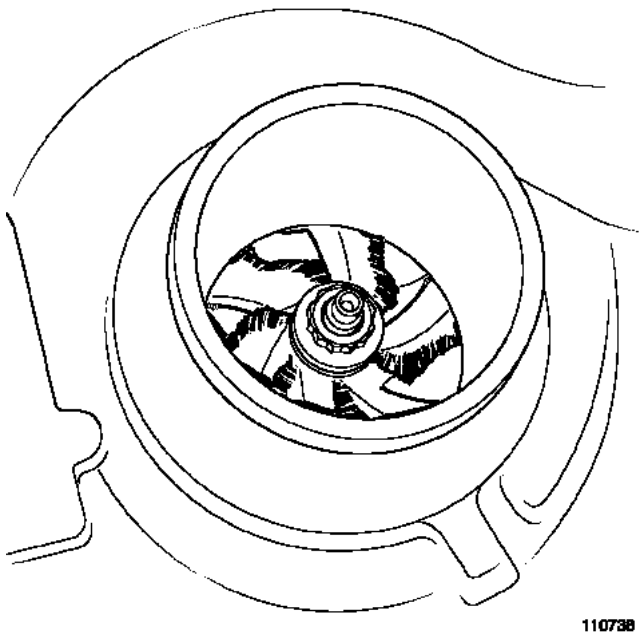

GETtheMANUALS.org

TEST10	Incorrect injector operation

Part A
Check the injector flow correction: (individual correction)
– In CLIP, choose **Fuel circuit**.
– With the engine idling and the fuel temperature **> 50˚C**, view the flow correction values for each injector (individual correction), i.e.:
PR364 Cylinder no. 1 fuel flow correction,
PR405 Cylinder no. 2 fuel flow correction,
PR406 Cylinder no. 3 fuel flow correction,
PR365 Cylinder no. 4 fuel flow correction,
PR407 Cylinder no. 5 fuel flow correction,
PR408 Cylinder no. 6 fuel flow correction.
The **normal flow correction value** for an injector is approximately **± 200 µs**. This tolerance value may increase with time, but indicates an injector/cylinder fault if it exceeds **± 300 µs**.
1) If at least one of these values > + 300 µs
– If the compression value recorded with the compression gauge reveals a faulty cylinder, carry out the necessary repairs and apply **Part C**.
– If the customer complaint is still present, replace the injector.
– Check the valve clearance.
– See paragraph **Part B**, for confirming the fault finding.
2) If at least one of these values < - 300 µs
– Check the level and condition of the engine oil.
– Remove the injector which has the biggest negative value.
– Check the valve clearance.
– Replace the injector.
– See paragraph **Part B**, for confirming the fault finding.
3) If at least one of these values does not stabilise (at least 30 seconds after starting and when warm)
– Check the low pressure circuit with **test 3 Low pressure circuit check**.
– Check the conformity of the fuel. Apply **test 12 Diesel fuel conformity check.**
– See paragraph **Part B**, for confirming the fault finding.
After replacing an injector, follow the injector code programming procedure (refer to **Interpretation of commands**), run **SC002 Enter injector codes** and select the number for the replaced injector.
IMPORTANT
When removing and refitting the injectors, follow the cleanliness guidelines and safety advice (see **MR 402 or MR 405 Mechanical, 13B, Diesel injection: Removal - Refitting**).

GETtheMANUALS.org

TEST10 CONTINUED	

Part B
Confirmation of flow correction check fault finding for each injector: (individual correction)
Clear the fault(s) and carry out a test with the **engine idling** and fuel temperature **> 50˚C**, check that no faults appear on the **diagnostic tool** and that the correction values do not reach **± 300 µs** to confirm the repair.
– If any other cylinders have injector flow correction values which exceed **± 300 µs**, follow the fault finding procedure described in **Part A**. Fuel regulation balance check for each injector (individual).

Part C
Injector nozzle sealing check:
– Check the level and condition of the engine oil:
– If there is diesel fuel contamination, the leaking injector nozzle will be "greasy".
– Disconnect the preheating relay.
– Check that these traces are not caused by rising engine oil, by checking the engine compression values.
– Check the condition of the heater plug: this must not be wet. If it is, change the defective injector.
– If the engine compression values are correct, locate the faulty injector by looking at the condition of the cylinders and the pistons across the heater plug wells (greasy cylinder, overheating, starting to incur damage, etc.).
– If the cylinder - piston examination is not conclusive, remove the injectors and change the one with the "greasy" nozzle.
– If the fault finding checks do not enable the engine to be repaired, contact the Techline.

IMPORTANT
When removing and refitting the injectors, respect the cleanliness guidelines and safety advice (do not forget to stick the label at the position indicated), (see **MR 402 or MR 405 Mechanical, 13B, Diesel injector: Removal - Refitting**).

GETtheMANUALS.org

TEST11	High pressure pump

Are the following conditions confirmed?
– No fault code.
– No external leak from the fuel circuit.
– No air intake on the fuel circuit.
Check that there is no OTS to be carried out on the vehicle.

Stage 1: Measuring the rail pressure:
– Carry out a road test and record the following parameters as soon as power is lost.
  – **PR145 Engine speed.**
  – **PR030 Accelerator pedal position**.
  – **PR038 Rail pressure.**
  – **PR008 Rail pressure setpoint.**
  – **PR213 Rail pressure loop difference.**
– Print the data found.

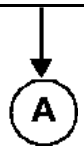

GETtheMANUALS.org

TEST11
CONTINUED

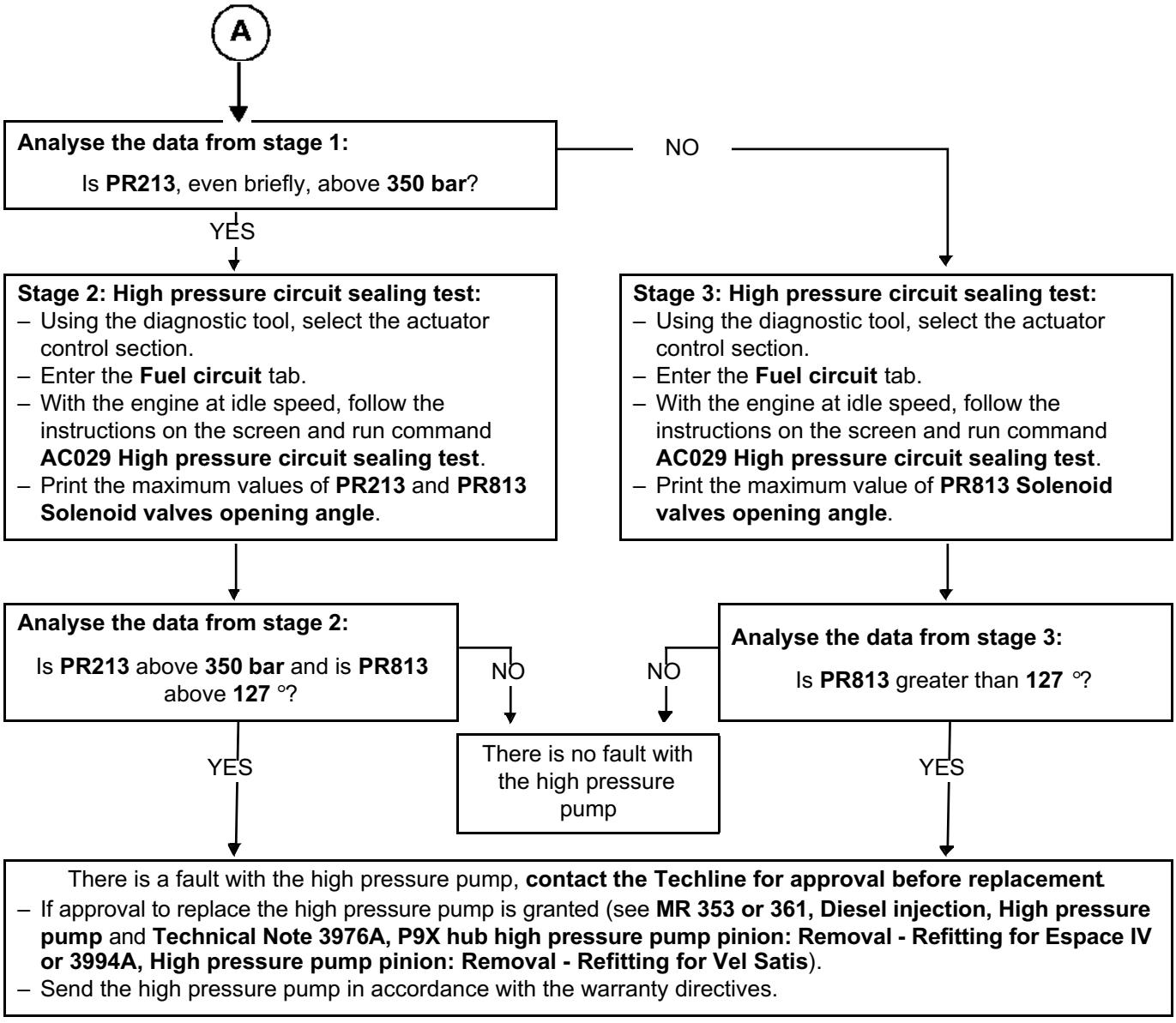

GETtheMANUALS.org

TEST12	Diesel fuel conformity check

WARNING
During this operation, it is essential to:
- **refrain from smoking or bringing incandescent objects close to the work area,**
- **protect yourself against fuel splashes due to residual pressure in the pipes,**
- **wear safety goggles with side guards,**
- **wear leaktight gloves (Nitrile type).**

IMPORTANT
- **To avoid any corrosion or damage, protect the areas on which fuel is likely to run.**
- **To prevent impurities from entering the circuit, place protective plugs on all fuel circuit components exposed to the open air.**

Preparations:

Weigh an empty **1300 ml plastic cup (part no. 77 11 171 413)** with its cover **(part no. 77 11 171 416)** using electronic scales such as those used in body paint workshops (example: **PANDA part no. 77 11 224 995**). Record the weight of the empty plastic cup.
This type of plastic cup is used to prepare paint.

Remove **1 L** of fuel **at the diesel filter outlet** (see **MR 402 or 405, Mechanical, 19C, Tank, Fuel tank: Draining**), using a pneumatic transfer pump (part no. 634-200) and place it in the **1300 ml** plastic cup.

Cover the plastic cup with its cover and allow it to settle for approximately **2 minutes**.

Is the fuel cloudy or does it separate into two parts?

YES → The diesel fuel contains water and is not compliant.
Drain the fuel circuit, including the tank (see **MR 402 or 405, Mechanical, 19C, Tank, Fuel tank: Draining**).

NO → A

GETtheMANUALS.org

TEST12 CONTINUED 1	

A

Weigh the diesel fuel and note the fuel weight after subtracting the weight of the empty plastic cup and its cover.
Does the fuel weight fall between the minimum and maximum weights given in the table below?

Calculated weight (g.)		Fuel temperature (˚C)
Min. weight	Max. weight	
821	846	13
821	846	14
820	845	15
819	844	16
819	844	17
818	843	18
817	842	19
816	841	20
816	841	21
815	840	22
814	839	23
814	839	24
813	838	25

Check the fuel temperature by immersing a thermometer in the plastic cup.

YES → A

NO → B

GETtheMANUALS.org

TEST12 CONTINUED 2	

A
YES

End of test.

B
NO

The fuel is not correct.

If the fuel weight is less than the minimum value then there is petrol in the diesel fuel.

If the fuel weight is greater than the maximum value then there is oil in the diesel fuel.

Drain the fuel circuit, including the tank (see **MR 402 or 405, Mechanical, 19C, Tank, Fuel tank: Draining**).

Note:

If the weight measured reaches the limit values, the measurement can be performed with a **2230 ml (part no. 77 11 171 414)** plastic cup with a cover **(part no.77 11 171 417):**

– Carry out a quick test drive in order to mix the fuel and then take a sample of **2 litres** of fuel.
– Perform the test again and check the results by multiplying the limit values by 2.

Contact your Techline if you have doubts or problems with the customer.

GETtheMANUALS.org

MANIFOLD PRESSURE SENSOR/TURBOCHARGING/MANIFOLD AIR TEMPERATURE

Specifications:	Voltage/Pressure transducer
Supply voltage:	**5 V ± 0.25**
Type of circuit:	Active circuit
System fitted:	Denso Injection
Type of connector:	**4 tracks** (1 earth - 2 inlet manifold vacuum signal - 3 + 5 V - 4 manifold temperature signal)

Description:
This sensor is used by the injection system to give a signal relating to the manifold pressure vacuum or the turbocharging pressure.
It uses a piezoelectric component which produces an electric voltage proportional to the stress applied to it (in this case, pressure).
This signal is very weak and is amplified by an internal electronic system which requires an external **5 V** feed supplied by the injection computer.

Pressure sensor test:
The sensor delivers a voltage proportional to the inlet manifold vacuum:
2.533 bar absolute (**1.533 bar** relative) = **4.394 V**.
0.133 bar absolute (**- 0.867 bar** relative) = **0.586 V**.

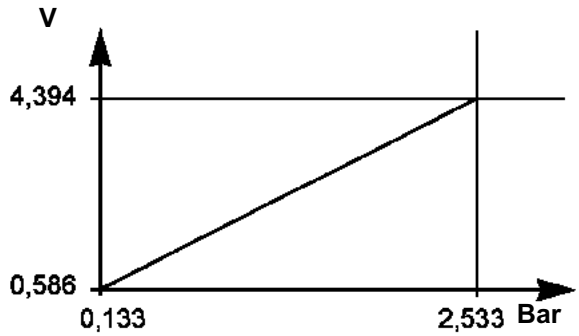

Check first that the sensor is correctly supplied with a voltage of **+ 5 V** with the sensor connected.
Use a multivac pump connected to the sensor's vacuum union to check that the signal does correspond to the graph. Disconnect **track 3** linking the computer to the sensor and connect the + lead of a multimeter (rated at between **5 and 10 V**) on **track 3** of the sensor and the - lead to **track 2** of the sensor (sensor earth still connected to the computer).
At atmospheric pressure, the voltage should be approximately equal to **1.95 V**.
At close to **2.533 bar** absolute, the voltage should be more or less equal to **4.394 V**.
At close to **0.133 bar** absolute, the voltage should be more or less equal to **0.586 V**.
If the voltages do not correspond to the pressures, replace the sensor.

GETtheMANUALS.org

Temperature-dependent resistance values for the inlet manifold air temperature sensor:

Temperature (in ˚C)	Resistance (in Ω)	Resistance tolerance (in Ω)
-30	26 628	1331
- 20	15 701	785
- 10	9 539	477
0	5 959	298
10	3 820	191
20	2 509	126
30	1 686	83
40	1 157	58
50	810	40
60	578	29
70	419	21
80	309	15
90	231	12
100	176	9
110	135	7
120	105	5

GETtheMANUALS.org

AIR FLOW SENSOR

Specifications:	Air Flow/Voltage transducer
Supply voltage:	**12 V**
Type of circuit:	Active circuit
System fitted:	Denso Injection
Type of connector:	**5 tracks** (**1**: flow sensor temperature signal; **2**: + 12 V; **3**: Earth; **4**: + 5 V; **5**: air flow signal)

Description:

This sensor is used by the injection system to give a signal relating to the air flow circulating in the inlet circuit. It uses a so-called "hot film" system, a ceramic insert onto which a heating resistor and a temperature sensor are screen-printed, which are placed in the middle of the air stream.

An electronic circuit heats the insert and monitors its temperature by means of its temperature sensor located away from the heating resistor.

The passage of air cools the ceramic wafer, and the electronic circuit will compensate for this cooling by increasing the current passing through the heating resistor so as to maintain its reference temperature.

This current, after being formatted by the air flow sensor electronics, represents the air flow passing through the air flow sensor.

A signal varying from **0** to **5 V** represents an air mass flow rate.

An external **12 V** power supply provided by the injection computer's safety relay is necessary for it to operate.

Checking the sensor:

Check that the grilles protecting the flow sensor are not clogged or damaged and check the cleanliness of the ceramic sensor located in the centre of the housing, which should be clean and must not be broken. Do not use detergent to clean the sensor (risk of damage).

The sensor cannot be dismantled; in case of doubt regarding its consistency, carry out a flow measurement.

Conditions:

Engine at operating temperature, exhaust gas recirculation valve and turbocharger compressor vane control, compressor disconnected and air conditioning off.

Measure at idling speed then at stabilised 2000 rpm. Repeat this measurement with another air flow sensor. The values should be more or less equivalent; if not, replace the air flow sensor.

Average flow value at inlet according to the conditions set out above:

At idle speed (700 rpm): 23 kg/h ± 3

At stabilised 2000 rpm: 140 kg/h ± 3

Note:

These values are typical for a new engine in operation and may only be used as an estimate. To confirm the test, carry out a test with another flowmeter.

GETtheMANUALS.org

Temperature-dependent resistance values for the air flow sensor air temperature sensor:

Temperature (in ˚C)	Resistance (in Ω)	Resistance tolerance (in Ω)
-30	22960	1148
- 20	13850	692
- 10	8609	430
0	5499	275
10	3604	180
20	2420	121
30	1662	83
40	1166	58
50	835	42
60	609	30
70	452	23
80	340	17
90	261	13
100	202	10
110	159	8
120	127	6

GETtheMANUALS.org

FUEL-OIL-COOLANT TEMPERATURE SENSOR

Specifications:	Temperature/Resistance transducer
Resistance:	According to the temperature
Type of circuit:	Passive circuit
System fitted:	Denso Injection
Type of connector:	**2 tracks**

Description:
This sensor is used by the injection system to give a signal representing a temperature of a component to which the sensor is attached.
This is a negative temperature coefficient resistor (the resistance drops when the temperature increases).
A circuit in the computer powers the sensor with a constant current and variation of the resistance causes variation of the voltage across the terminals of the sensor, this voltage being representative of the temperature.

Checking the sensor:
The presence of a yellow or transparent wax in the connector indicates that the sensor seal is broken; replace it and recheck the sealing.
Use a multimeter to first check the insulation of the sensor's two tracks from its metal base (if so equipped) or from engine earth.
The resistance should in this case be infinite and if this is not the case replace the sensor.
Using a multimeter, check the sensor's resistance in relation to the temperature.
This should be: **3511 Ω ± 176 at + 20 °C**.
If the values do not correspond, replace the sensor.

Temperature-dependent resistance values for the engine coolant temperature sensor, engine oil temperature sensor and fuel temperature sensor:

Temperature (in °C)	Resistance (in Ω)	Resistance tolerance (in Ω)
- 40	100 865	5043
-30	52 594	2630
- 20	28 583	1429
- 10	16 120	806
0	9 399	470
10	5 658	280
20	3 511	176
30	2 240	112
40	1465	73
50	980	50

Temperature (in °C)	Resistance (in Ω)	Resistance tolerance (in Ω)
60	671	34
70	469	23
80	334	17
90	242	12
100	178	9
110	133	7
120	101	5
130	78	4
140	60	3
150	47	2

GETtheMANUALS.org

ACCELERATOR POTENTIOMETER

Specifications:	Position/Resistance transducer
Supply voltage:	2 tracks, each at **+ 5 V ± 0.25 V**
Resistance:	Depends on the angle
Type of circuit:	Passive circuit
System fitted:	Denso Injection
Type of connector:	**6 tracks**

Pin configuration:

Track 2 > potentiometer 1 earth
Track 4 > potentiometer 1 supply
Track 3 > potentiometer 1 signal
track 1 > potentiometer 2 earth
track 5 > potentiometer 2 supply
track 6 > potentiometer 2 signal

Description:
This sensor is equipped with two potentiometers (variable resistance) insulated from one another.
The position of the shaft causes a variation in the sensor's internal resistance.
The two gangs are not synchronous, gang 2 has a resistance value double that of gang 1.
These two gangs are used by the injection computer to check that the accelerator potentiometer is giving consistent signals.

Checking the sensor:
Use a multimeter to measure the resistance of the potentiometers,
– between **tracks 1** and **5**, the resistance should be **1700** Ω ± **680**,
– between **tracks 2** and **4**, the resistance should be **1200** Ω **± 480**,
If one of the gangs is not within these tolerances, replace the accelerator potentiometer.

MINIMUM value:
Gang 1 (from **13.6% to 16.4%** of Valim P1 (5 V) or **0.68 to 0.82 V**)
Gang 1 (from **5.2% to 9.8%** of Valim P2 (5 V) or **0.26 to 0.49 V**)
MAXIMUM value:
Gang 1 (from **83.6% to 92.4%** of Valim P1 (5 V) or **4.18 to 4.62 V**)
Gang 1 (from **40.7% to 47.3%** of Valim P2 (5 V) or **2.03 to 2.36 V**)

GETtheMANUALS.org

RAIL PRESSURE SENSOR

Specifications:	Voltage/Pressure transducer
Supply voltage:	**5 V ± 0.25**
Type of circuit:	Active circuit
System fitted:	Denso Injection
Type of connector:	**3 tracks** (**1**: earth - **2**: signal - **3**: + 5 V)

Description:
This sensor is used by the injection system to give a signal relating to the rail pressure (fuel pressure in the common rail).
It uses a piezoelectric component which produces an electric voltage proportional to the stress applied to it (in this case, pressure).
This signal is very weak and is amplified by an internal electronic system which requires an external **5 V** feed supplied by the injection computer.

Checking the sensor:
The sensor delivers a voltage proportional to the rail pressure:
2000 bar = 4.20 V
0 bar = 1 V

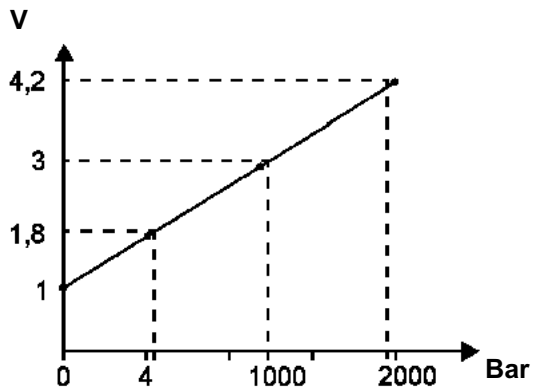

The formula is as follows:
where P is the pressure in bar: **(P/500) + 1 = U**
U is the signal voltage in volts: **(U - 1) x 500 = P**
Check first that the sensor is correctly supplied with a voltage of **+ 5 V** with the sensor connected.
Dump the pressure in the common rail and check that the sensor signal voltage is **1 V**.
If the voltage is not correct, replace the sensor.

GETtheMANUALS.org

P9X 715

Engine speed:	– Idling speed	**700 ± 50 rpm**
	– No load maximum	**5,000 ± 80 rpm**
	– Injection order	**1-2-3-4-5-6**
	– Compression ratio	**18.5 : 1**
High pressure pump:	EDC-U2P	**Denso HP2270L**
Rail pressure sensor:	Bolted to rail (pressure range: **0 to 1700 bar**)	
Injector:	**0.4 Ω ± 0.1 at + 20 ˚C (new injector), pressure rating: 466 bar**	
Pressure regulation solenoid valves:	**SCV1**, R = **1.6 Ω ± 0.3 at + 20 ˚C** (non-removable) **SCV2**, R = **1.6 Ω ± 0.3 at + 20 ˚C** (non-removable)	
Injection computer (ECU):	**121 tracks, 2 connectors:**	**connector A: 81 tracks, connector B: 40 tracks**
Injector control computer (EDU):	**18 tracks.**	
Accelerator pedal sensor:	R gang 1 = **1,200 Ω ± 480** R gang 2 = **1,700 Ω ± 680**	
Manifold air temperature sensor:	R = **2,509 Ω ± 176 at + 20 ˚C**	
Flow sensor air temperature sensor:	R = **2,420 Ω ± 121 at + 20 ˚C**	
Fuel temperature sensor (diesel):	R = **3,511 Ω ± 176 at + 20 ˚C**	
Engine coolant temperature sensor:	R = **3,511 Ω ± 176 at + 20 ˚C**	
Engine oil temperature sensor:	R = **3,511 Ω ± 176 at + 20 ˚C**	
Engine speed sensor:	Induction sensor, R = **2,150 Ω ± 107.5**	
Camshaft sensor:	Induction sensor, R = **2,150 Ω ± 107.5**	
Air flow sensor:	track 1: **air temperature signal**/track 2: **+ 12 V battery** track 3: **Earth**/track 4: **+ 5 V air flow sensor** track 5: **Air flow sensor signal**	
Exhaust gas recirculation valve (EGR):	R (coil) = **6.8 ± 0.5 Ω at + 20 ˚C** between tracks **4** and **6** R (potentiometer) = **5 ± 0.5 kΩ at + 20 ˚C** between tracks **1** and **2**	
	track 1: **+ 5 V** /track 2: **earth** track 3: **potentiometer signal**/track 4: + **EGR control** track 6: **- EGR control**	

(R = resistance)

Values given as examples only

GETtheMANUALS.org

VEL SATIS

1 Engine and peripherals

17B PETROL INJECTION

SAGEM 3000
Program No.: AC
Vdiag No.: 08

Fault finding – Introduction	17B - 2
Fault finding – System operation	17B - 7
Fault finding – Allocation of computer tracks	17B - 21
Fault finding – Replacement of components	17B - 24
Fault finding – Configurations and programming	17B - 26
Fault finding – Fault summary table	17B - 28
Fault finding – Interpretation of faults	17B - 33
Fault finding – Conformity check	17B - 103
Fault finding – Status summary table	17B - 141
Fault finding – Interpretation of statuses	17B - 143
Fault finding – Parameter summary table	17B - 161
Fault finding – Interpretation of parameters	17B - 163
Fault finding – Interpretation of commands	17B - 171
Fault finding – Customer complaints	17B - 178
Fault finding – Fault Finding Chart	17B - 179

V2 **Edition Anglaise**

"The repair procedures given by the manufacturer in this document are based on the technical specifications current when it was prepared.

The procedures may be modified as a result of changes introduced by the manufacturer in the production of the various component units and accessories from which his vehicles are constructed."

All rights reserved by Renault s.a.s.

Copying or translating, in part or in full, of this document or use of the service part reference numbering system is forbidden without the prior written authority of Renault s.a.s.

© Renault s.a.s. 2008

GETtheMANUALS.org

1. SCOPE OF THIS DOCUMENT

This document presents the fault finding procedure applicable to all computers with the following specifications:

Vehicle(s): **LAGUNA 2 ph2 - VELSATIS ph2 - ESPACE IV ph1 and 2** *Engines:* **K4M 716 / F4R 714, 715, 792 F4R-t 766, 767, 784, 786, 787, 796, 797** F4R-t 866, 867, 886, 887, 896, 897 *Function concerned:* **Petrol injection**	*Name of computer:* **Sagem S3000** *Program No.:* **AC** *VDIAG No.:* **08**

2. PREREQUISITES FOR FAULT FINDING

Documentation type

Fault finding procedures (this document):
– Assisted fault finding (integrated into the diagnostic tool), Dialogys.
Wiring Diagrams:
– Visu-Schéma (CD-ROM), paper.

Type of diagnostic tools

– **CLIP + multiplex line sensor**

Special tooling required

Special tooling required	
	Multimeter
Elé. 1481	Bornier
Elé. 1681	Universal bornier

3. REMINDERS

Procedure

To save energy, the UCH of the vehicle interrupts the + after ignition feed after 3 minutes.

To run fault finding on a computer, it is possible to force the + after ignition feed on for 1 hour by applying the following procedure:
– press the unlocking button on the card,
– insert the card in the reader,
– if the ignition is switched on, press the Start button (interruption of timed + after ignition feed),
– press and hold the start button for over 5 seconds until the engine immobiliser warning light starts to flash rapidly (4 Hz).

This forced + after ignition feed mode remains on for 1 hour.
Pressing the Start button or removing the card from the card reader cuts off the + after ignition feed but does not cut off the forced after ignition feed timed mode. Until one hour has elapsed, activating the + after ignition feed will restart forced + after ignition feed for the remaining time.

GETtheMANUALS.org

Faults

Faults are displayed as present or stored (they appeared in a certain context and have since disappeared, or they are still present but cannot be diagnosed in the current context).

The **present** or **stored** status of faults should be taken into consideration when the diagnostic tool is used after the + after ignition feed is switched on (without acting on the system components).

For a **present fault**, apply the procedure described in the **Interpretation of faults** section.

For a **stored fault**, note the faults displayed and apply the **Notes** section.

If the fault is **confirmed** when the instructions are applied, the fault is present. Deal with the fault.

If the fault is **not confirmed**, check:
– the electrical lines which correspond to the fault,
– the connectors for these lines (for oxidation, bent pins, etc.),
– the resistance of the component detected as faulty,
– the condition of the wires (melted or split insulation, wear).

Conformity check

The aim of the conformity check is to check data that does not produce a fault on the diagnostic tool because the data is inconsistent. Therefore, this stage is used to:
– perform fault finding on faults that do not have a fault display, and which may correspond to a customer complaint.
– check that the system is operating correctly and that there is no risk of a fault recurring after repair.

This section gives the fault finding procedures for statuses and parameters and the conditions for checking them.

If a status is not behaving normally or a parameter is outside the permitted tolerance values, consult the corresponding fault finding page.

Customer complaints - Fault finding chart

If the test with the diagnostic tool is OK but the customer complaint is still present, the fault should be processed by **Customer complaints**.

A summary of the overall procedure to follow is provided on the following page in the form of a flow chart

GETtheMANUALS.org

4. FAULT FINDING PROCEDURE

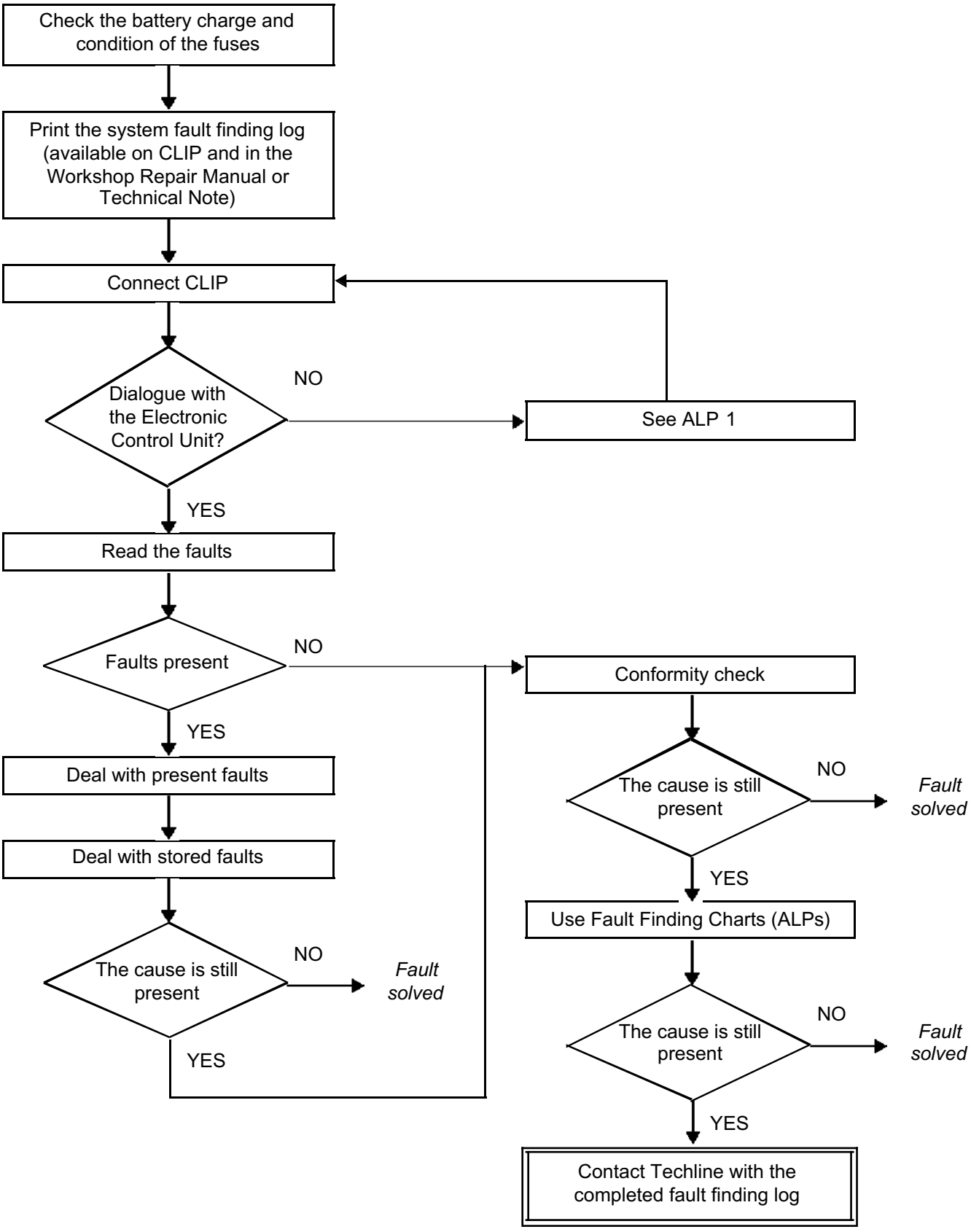

GETtheMANUALS.org

4. FAULT FINDING PROCEDURE (continued)

Wiring check:

Fault finding problems:

Disconnecting the connectors and/or manipulating the wiring may temporarily remove the cause of a fault.
Electrical measurements of the voltage, resistance and insulation are generally correct, especially if the fault is not present when the analysis is made (stored fault).

Visual inspection:

Look for damage under the bonnet and in the passenger compartment.
Carefully check the fuses, insulation and wiring routing.
Look for signs of oxidation.

Tactile inspection:

While manipulating the wiring, use the diagnostic tool to note any change in fault status from stored to present.
Check that the connectors are correctly tightened, apply light pressure to the connectors, twist the wiring harness.
If there is a change in status, try to locate the source of the fault.

Inspection of each component:

Disconnect the connectors and check the appearance of the clips and tabs as well as their crimping (no crimping on insulation section).
Make sure that the clips and tabs are properly locked in the sockets.
Make sure no clips or tabs have been dislodged during connection.
Check the clip contact pressure using an appropriate model of tab.

Resistance check:

Check the continuity of entire lines, then section by section.
Look for a short circuit to earth, to **+ 12 V** or with another wire.

If a fault is detected, repair or replace the wiring harness.

GETtheMANUALS.org

5. FAULT FINDING LOG

IMPORTANT!

IMPORTANT:
Any fault on a complex system requires thorough fault finding with the appropriate tools.
The FAULT FINDING LOG, which should be completed during the fault finding procedure, ensures a record is kept of the procedure carried out. It is an essential document when consulting the manufacturer.

IT IS THEREFORE MANDATORY TO FILL OUT A FAULT FINDING LOG EACH TIME FAULT FINDING IS CARRIED OUT.

You will always be asked for this log:
– when requesting technical assistance from Techline,
– for approval requests when replacing parts with mandatory approval, and to be enclosed when returning monitored parts on request. The log is needed for warranty reimbursement, and enables better analysis of the parts removed.

6. SAFETY INSTRUCTIONS

Obey safety rules when working on any component, to prevent damage or injury.
– check the battery voltage to avoid incorrect operation of computer functions,
– use the proper tools.

7. FAULT FINDING

Stored faults are managed the same way for all sensors and actuators.
A stored fault is cleared after 128 recurrence-free starts.

GETtheMANUALS.org

1. SYSTEM OPERATION

Composition

The injection system consists of the:
– accelerator potentiometer,
– clutch pedal switch,
– TDC sensor,
– atmospheric pressure sensor,
– air temperature sensor,
– coolant temperature sensor,
– upstream oxygen sensor,
– downstream oxygen sensor,
– cruise control switch,
– steering column switch,
– cruise control on/off switch,
– fuel vapour absorber,
– injection computer,
– motorised throttle valve,
– 4 injectors,
– 4 pencil coils,
– Pinking sensor,
– camshaft dephaser,
– camshaft sensor (only on K4M),
– turbocharging pressure sensor (F4R turbo only)
– water pump (only on F4R Turbo),
– wastegate solenoid valve (only on F4R Turbo),
– turbocharging solenoid valve (only on F4R-Turbo)
– air pump (only on F4R Turbo engines with an automatic gearbox),
– air pump (only on F4R Turbo engines with an automatic gearbox),
– pressure switch (only on F4R Turbo engines with an automatic gearbox),

Computer

SAGEM S3000 FLASH EEPROM 128-track computer controlling the injection and ignition.

Multipoint injection in sequential mode.

Connections to the other computers:
– air conditioning,
– UCH,
– Automatic Gearbox Electronic Control Unit (ECU Automatic Gearbox).
– airbag,
– ABS/ESP,
– instrument panel.

GETtheMANUALS.org

2. Role of components, operating strategy

Engine immobiliser

The Verlog 3 type immobiliser function is managed by the UCH computer and the engine management computer.

Before any starting request, the engine management computer is protected.

When a starting request is made, the injection computer and the UCH exchange authentication data via the multiplex network; this determines whether the engine start is authorised.

After more than 5 consecutive failed authentication attempts, the engine management computer goes into protection (anti-scanning) mode and no longer tries to authenticate the UCH computer. It only exits this mode when the following sequence of operations occurs:

- the ignition is left on for at least **60 seconds**,
- the message is switched off,
- the injection computer self-supply cuts out when it should (the time varies according to engine temperature).

After this, only one authentication attempt is allowed. If this fails again, repeat the sequence of operations described above.

If the engine management computer still fails to unlock, contact the Techline.

Impact detected

If an impact has been stored by the injection computer, switch off the ignition for **10 seconds**, then switch it back on so that the engine can be started. Clear the faults.

WARNING
Disconnect the injection computer when carrying out any welding work on the vehicle.

Torque management

The torque structure is the system for managing engine torque. It is necessary for some functions like the electronic stability program (ESP), the automatic transmission (BVA) or the sequential gearbox (BVR).

Each inter-system (ESP, automatic gearbox, sequential gearbox) sends the injection computer a torque request via the multiplex network. This arbitrates between the inter-system torque requests and the driver's request (made via the pedal or the cruise control/speed limiter function). The result of the arbitration gives the torque setpoint. Using the torque setpoint, the torque structure calculates the throttle position setpoint, the timing and if the turbocharging function is present, the turbocharging valve (wastegate) setpoint.

GETtheMANUALS.org

Camshaft dephaser

Its role is to modify the valve timing.

The camshaft dephaser is continuously variable in operation.

In applications without a camshaft sensor, the engine phasing is controlled by software. This is the case on engines that do not have a camshaft dephaser.

This information can be viewed through status **ET084 Camshaft dephaser**.

A first strategy called "Memo phasing" is applied to phase the engine management on starting according to the data recorded when the engine last stalled. Wait for the end of auto-feed (power latch and therefore this data to be saved) before disconnecting the computer.

Then, a second program confirms the first decision. It is based on torque analysis.

The injection computer actuates a camshaft dephaser that varies according to the engine:

- **K4M engine**
  Continuous variable inlet camshaft dephaser between **0 and 43**˚ of the crankshaft, controlled by a solenoid valve supplied by an opening cyclic ratio circuit through the injection computer.

- **F4R and F4R-T engines**
  Inlet camshaft dephaser controlled by a solenoid valve with an all or nothing supply from the injection computer.

Camshaft sensor (only on K4M)

The role of the camshaft sensor is:
– to locate the computer cylinders so that the computer correctly synchronises the sequential injection,
– checks the position of the inlet camshaft.

Motorised throttle valve

The throttle valve carries out idling speed regulation and engine air intake modulation functions. It comprises an electric motor and two throttle position potentiometers.
When the engine is idling, the throttle position is regulated according to the idling speed setpoint. This setpoint takes into account the major power consumers (air conditioning) and operating conditions (air temperature and coolant temperature).

GETtheMANUALS.org

Fuel supply management

Fuel is supplied by the fuel pump. It is actuated each time the ignition is switched on for one second, to provide a certain pressure level in the circuit, and thereby achieve a proper start, particularly if the vehicle has been unused for a long time.
When the engine is running, the fuel pump relay is always controlled.

Control of the petrol pump relay can be viewed through status **ET047 Petrol pump control circuit**.

The petrol tank is vented by way of a canister filled with activated charcoal that traps the vapour from the petrol tank. This canister is bled via the engine vacuum pipe. It enters the inlet plenum via a hose, whose section is controlled by a bleed valve. It is controlled by the injection computer via the opening cyclic ratio. For reasons of engine instability or canister bleed solenoid valve operating noise emitted by the vehicle, there are two possible frequencies for controlling the canister bleed solenoid valve:

- a low frequency **8 Hz**,
- a high frequency **20 Hz**.

The frequency of the control opening cyclic ratio depends on the engine speed.
Bleed the canister to drain it as it fills, to limit vapour release into the air if a canister is saturated for example.

Air supply management

The idle speed regulator performs all the calculations required for physical control of the idling speed actuator: the motorised throttle. The functional component of the regulator is adaptive (variation programming and ageing).

If the idling speed regulation conditions are observed, **ET054 Idle speed regulation** is **ACTIVE**, the idling speed regulator continuously positions the motorised throttle to maintain the engine speed at its idling setpoint. The motorised throttle opening ratio necessary to comply with the speed setpoint is then given by parameter **PR091 Idle speed regulation theoretical OCR**.

Note on parameter **PR091**:

This parameter uses only 2 parameters accessible in fault finding frame: **PR444 Idle speed integral correction** and **PR090 Idle speed regulation programming value** which is the integral adaptive action.

- **PR090 Idling speed regulation programming value** is a stored parameter designed to program dispersion and engine ageing for the idling speed regulator. The programming is carried out only when the engine is idling and warm, and no electrical consumer (air conditioning, fan unit, power assisted steering) is operating. So it adjusts slowly.
- **PR444 Idle speed regulation integral correction** is continuously calculated to take into account the air required by consumers.

GETtheMANUALS.org

Adaptive idling speed correction:

Under normal warm operating conditions, the idling speed opening cyclic ratio value **PR091 Idling speed regulation theoretical OCR** varies between a high value and a low value to obtain the nominal idling speed.
After operating dispersion (running in, engine fouling, etc.), the opening cyclic ratio value may be close to the high or low values.

The adaptive correction **PR090 Idle speed regulation programming value** on the idling speed opening cyclic ratio compensates for the gradual variations in the engine's air requirement, by bringing the idling speed opening cyclic ratio back to an average nominal value.
This adjustment only takes effect if the coolant temperature is above **75 °C**, **1 minute** after starting the engine and during the idle speed regulation phase.

Idling speed setpoint calculation:

The idling speed setpoint is given by parameter **PR536 Idle speed regulation valve setpoint**.
The idling speed regulation setpoint depends on the coolant temperature, the emissions control programming, the climate control requirements, the position of the gearbox selector, any power assisted steering action, the passenger compartment heating resistors, the oil temperature (engine protection) and the electricity balance calculated by the injection software (the engine speed is increased by **160 rpm** maximum if the battery voltage remains below **12.7 V**).

Richness management

For optimum operation of the catalytic converter, it is necessary to adjust around richness 1.

Richness regulation is controlled by the upstream sensor. The sensor gives voltage according to the difference between the partial oxygen pressures contained in the exhaust and a cavity filled with a reference mixture (atmosphere).

As the partial oxygen pressure in the exhaust is representative of the richness, the voltage supplied to the computer represents a Rich - Lean signal.

Adaptive richness correction:

In loop mode, the richness regulation corrects the injection time to obtain a a mixture as close as possible to richness 1. The richness correction value **PR138 Richness correction** is around **50 %**, with thresholds of **0** and **100 %**.
The richness adaptive corrections **PR143 Self-adapting richness gain** and **PR144 Self-adapting richness offset** are used to offset the injection mapping to centre richness regulation on **50 %**.
Adaptive corrections take **50 %** as an average value after computer initialisation (clearing the programming) and have the following limit values:

GETtheMANUALS.org

A vehicle is fitted with an upstream sensor if the configuration reading **LC003 Upstream oxygen sensor** is **WITH**.

For the upstream sensor to be operational very rapidly, it is heated. Sensor heating **ET052 Upstream O_2 sensor heating** is only **ACTIVE** when the engine is running. It is disabled above **84 mph (140 km/h)** or with the engine under load.

The downstream sensor is also used for richness regulation via the double loop program. The way it works is to characterise the condition of the upstream sensor and to compensate for any upstream sensor dynamic richness drift.

The vehicle is fitted with a downstream sensor if the configuration reading **LC004 Downstream oxygen sensor** is **WITH**.
For the double loop **ET056 Double richness loop** to be **ACTIVE**, the vehicle must be driven with the engine warm for approximately **1 minute 30 seconds** in the absence of no load conditions.

The downstream sensor is also heated. The command is not immediate when the engine is started. **ET053 Downstream O_2 sensor heating** is **ACTIVE** after a time that depends on the latest coolant temperature with the engine running and in the absence of no load conditions. The heating of the downstream sensor is deactivated under **84 mph (140 km/h)** or when the engine is under load.

There are several types of control depending on the sensor type:

- **BOSCH LSH25/NTK 6L (6 Ω)/DELPHI AFS128 (3 wires):** Continuous control,
- **BOSCH LSF 4.7 (known as PLANAR):** Each time the engine is started, control is first executed by means of an OCR type signal of **20 Hz** in frequency for approximately **20 seconds** then it becomes continuous,
- **BOSCH NTK 6L (3.3 Ω):** each time the engine is started, control is at first continuous for **15 seconds** and is then controlled by means of an OCR type signal with a frequency of **20 Hz**.

Management of turbocharging pressure (F4R Turbo only)

The turbocharging pressure is adjusted via the position of the pressure regulation valve (wastegate).

Principle

This pressure adjustment valve is linked via a rod to the wastegate diaphragm and is controlled by the injection computer via a solenoid valve. This solenoid valve is normally open and is fitted to the inlet pipe between the air filter and turbocharger inlet.

In the rest position, (open), this solenoid valve links the turbocharger outlet (turbocharging pressure) and the pressure regulation valve control diaphragm.

The turbocharging pressure affects the diaphragm directly, the pressure regulation valve (wastegate) opens and the maximum possible pressure is approximately **1,350 mbar - 1,400 mbar**, irrespective of the engine speed (minimum turbocharging for the engine).

When the solenoid valve is controlled, the turbocharging pressure signal (taken at the turbocharger outlet) is diverted to the compressor inlet. As a result, the diaphragm is not subject to turbocharging pressure, the pressure regulation valve (wastegate) closes back to a position imposed by the regulation system.

GETtheMANUALS.org

In addition to turbocharging pressure management, the computer controls the engine for full load constant torque operation.

This means that, irrespective of the engine conditions (air temperature, atmospheric pressure etc.), the maximum torque will always be **275 Nm** and the power **125 kW**. Therefore, for an air temperature of **20 °C**, the turbocharging pressure at full load will be less than at **50 °C**. Except for controlled torque management, the turbocharging pressure can never exceed **1800 mbar**.

Ignition management

The advance is calculated for each cylinder. This may have a negative value, and is limited to between **- 23.625 °** and **+ 72 °** and includes any corrections due to pinking.

The slow loop anti-pinking correction is the maximum advance value that is deducted from the advance of one of the cylinders. If none of the cylinders is pinking, this correction is zero.

Injectors

The injectors are controlled according to several modes. In particular, the engine is started in semi-full group mode (injectors 1 and 4, then injectors 2 and 3 simultaneously), then it enters sequential mode, to ensure a correct start whether or not it is correctly phased.

In fact in rare cases it is possible for the engine to run incorrectly phased if the Memo phasing program failed during the last engine stop. So, since the system did not enter sequential injection mode and the cylinder 1 detection program did not run, the injections are offset by 2 cylinders: therefore injecting in the order 4-2-1-3 rather than the expected 1-3-4-2.

The injection time is constantly calculated and may be zero, in the event of cut-off during deceleration or overspeed for example.

Vacuum pump/pressure switch system

The electric vacuum pump (on a petrol engine) helps create a vacuum when there is not a sufficient vacuum in the inlet manifold at low speeds (fewer rpm, less power).

GETtheMANUALS.org

3. OBD management

Managed OBD programming is as follows:
- catalytic converter operational fault finding,
- upstream oxygen sensor operational fault finding,
- misfiring fault finding with two levels of detection: pollutant misfiring and catalytic converter breakage misfiring,
- fuel supply system fault finding.

The misfiring and fuel supply system fault finding is performed continuously.

The operational fault finding for the upstream sensor and the catalytic converter can be only be carried out once per journey, and can never occur at the same time.

OBD fault manager:

The OBD faults manager does not replace or modify conventional electrical fault management. Perform to comply with OBD standard.

The requirements are:
- storing OBD faults,
- illuminate the OBD warning light for all faults where the OBD emission thresholds are exceeded,
- flash the OBD warning light for misfire faults damaging the catalytic converter.

Operating principle

If a fault is detected and confirmed during **3** consecutive journeys then:
- an OBD stored fault is displayed,
- the OBD fault warning light receives a request to be lit continuously. This request is only recognised if the fault in question is authorised to activate the OBD warning light.

To deactivate the warning light, no OBD faults should be detected for **3 consecutive** journeys.

The electrical fault finding checks taken into consideration by the OBD faults manager are as follows:

- pressure,
- turbocharging pressure,
- coolant temperature,
- air temperature
- vehicle speed
- upstream sensor,
- downstream sensor,
- missing tooth on crankshaft target,
- no tooth signal,
- flywheel target fault,
- upstream sensor heating,
- downstream sensor heating,
- injector 1,
- injector 2,
- injector 3,
- injector 4,
- ignition coil 1,
- ignition coil 2,
- ignition coil 3,
- ignition coil 4,
- petrol pump,
- wastegate,
- canister bleed,
- air line system,
- turbocharging system
- pressure consistency,
- pinking sensor,
- camshaft dephaser.

GETtheMANUALS.org

Catalytic converter:

Purpose

Catalytic converter operational fault finding should detect a malfunction which would cause hydrocarbon pollutant emissions to exceed the EOBD limit.

Principle

The ability of the catalytic converter to store oxygen indicates the condition of the catalytic converter.
As the catalytic converter ages, its ability to store oxygen reduces along with its ability to treat pollutants. The principle lies in using the correlation between the oxygen storage capacity and the HC emissions.
When the conditions for starting fault finding are confirmed, richness excitation peaks are applied, which has the effect of sending bursts of oxygen into the catalytic converter.
If the catalytic converter is in good condition it will absorb the oxygen sent to it and the downstream sensor voltage will remain at its average value.
If it is damaged, it rejects the oxygen that it cannot store and the downstream sensor starts knocking. The more the catalytic converter is damaged, the more the downstream oxygen sensor will oscillate.

Catalytic converter air pump heating system

With the new OBD standards, accelerates the heating up of the catalytic converter when the engine is cold. During this operating phase, the air-fuel mixture is rich and contains large amounts of carbon dioxide (CO) and hydrocarbons (HC). To improve operation, add oxygen to oxidise the carbon dioxide and hydrocarbons and heat up the catalytic converter.
The role of the air pump is to inject air (oxygen) into the exhaust manifold to heat up the catalytic converter.

Sensors:

Purpose

Sensor converter operational fault finding must be able to detect a malfunction causing pollutant HC emissions to exceed the EOBD threshold.

There are 2 kinds of oxygen sensor damage:
- mechanical damage to the component (breakage, cut in wire) which leads to an electrical fault,
- chemical or thermal damage to the component leading to a slower response time of the sensor and to the increase in the average reaction time.

Description of programming

When the conditions for starting fault finding are confirmed, read the upstream sensor signal periods by removing the glitches (interference phenomena), then take the average, and compare with an EOBD limit average period.
The fault finding check may be staggered, i.e. divided over several consecutive engine stability phases, and its duration will vary according to the condition of the sensor.

GETtheMANUALS.org

4. Engine coolant temperature management

Engine cooling is provided by 1 or 2 fan assemblies (depending on the vehicle layout). The injection computer requests their activation by the air conditioning computer via the multiplex network.

To provide cooling:

With the engine running, fan unit 1 is requested if the coolant temperature exceeds **99 ˚C** and is shut down if the coolant temperature falls below **96 ˚C**. Fan unit 2 is requested if the coolant temperature exceeds **102 ˚C** and is shut down if the coolant temperature falls below **99 ˚C**.

With the engine off, only fan assembly 1 may be activated to provide the anti-percolation function (if engine is stopped when very hot). The anti-percolation function is active with the ignition off for a determined period. During this period, fan unit 1 is requested if the coolant temperature exceeds approximately **100 ˚C** and is shut down if the coolant temperature drops below around **95 ˚C**.

If a fault is detected on the coolant temperature sensor circuit, then fan assembly 1 is requested to operate continuously.

If the engine coolant temperature goes beyond the warning threshold of **118 ˚C**, the injection computer requests the instrument panel computer via the multiplex network to illuminate on the coolant temperature warning light until the coolant temperature falls back below **115 ˚C**.

In addition to the engine requirements, the injection computer centralises the cooling requirements for the Air conditioning and Automatic gearbox/Sequential gearbox functions.

5. Air conditioning function

The S3000 computer manages a cold loop air conditioning system.
- request for air conditioning by logical link,
- acquisition of air conditioning circuit pressure,
- vehicle speed
- air conditioning compressor control,
- fan assembly control for the requirements of this function.

The injection computer recovers the power absorbed by the air conditioning compressor and the fast idling speed request using the pressure acquired in the air conditioning circuit.
These signals are necessary for adapting the engine management (idle speed regulation, air flow correction, etc.), for several reasons:
- air conditioning compressor efficiency,
- sturdier engine to torque bucking caused by compressor activation,
- helping the alternator.

Requests for fan unit 1 and/or fan unit 2 are recovered based on the air conditioning circuit pressure and the vehicle speed. In short, the lower the speed and the higher the pressure, the greater the fan unit requests.

GETtheMANUALS.org

6. Defect modes

Motorised throttle valve
In defect mode, the motorised throttle valve can have 6 different statuses.

Type 1	The throttle opening is less than the Safe mode position. The throttle is no longer activated and is automatically in Safe mode. The ESP, distance control and cruise control/speed limiter systems are disabled. The automatic transmission is in "Safe mode".
Type 2	The throttle opening is no longer actuated. The engine speed is limited by injection cut-off.
Type 3	Defect mode is associated with restructuring of the pedal setpoints (constant pedal setpoint for each gear).
Type 4	The associated defect mode restricts the throttle opening. The maximum throttle valve opening threshold results in a speed of below 54 mph (90 km/h).
Type 5	The computer no longer processes torque changes requested by the ESP, distance control, cruise control/speed limiter and automatic gearbox systems. This defect mode results from a computer malfunction, or a fault with the manifold or turbocharging pressure sensor. The system then only uses the accelerator pedal signal. The ESP, distance control and cruise control/speed limiter systems are disabled. The automatic transmission system is in Safe mode.
Type 6	The turbocharging valve no longer works.

Any entry into type 1 to 5 defect mode always leads to the application of type 6.

GETtheMANUALS.org

Table of defect modes:

	Type 1	Type 2	Type 3	Type 4	Type 5	Type 6
DF003 Atmospheric pressure sensor circuit		**1.DEF** **2.DEF** **3.DEF**				
DF011 Sensor supply voltage no. 1				**1.DEF** **2.DEF**		
DF012 Sensor supply voltage no. 2				**1.DEF** **2.DEF**		
DF079 Motorised throttle valve automatic control	**1.DEF** **2.DEF** **3.DEF** **4.DEF** **5.DEF** **6.DEF** **7.DEF**	**1.DEF** **2.DEF** **4.DEF** **5.DEF** **6.DEF** **7.DEF**				
DF095 Throttle potentiometer circuit gang 1				**CO.0/** **CC.1** **1.DEF**		
DF096 Throttle potentiometer circuit gang 2				**CO.0/** **CC.1**		**CO.0/** **CC.1**
DF196 Pedal potentiometer circuit gang 1			**CO.0/** **CC.1** **1.DEF**	**CO.0/** **CC.1** **1.DEF**		
DF198 Pedal potentiometer circuit gang 2				**CO.0/** **CC.1**		
DF508: Motorised throttle control	**CC.1** **1.DEF**	**CC.1** **1.DEF**				

Camshaft dephaser:

The camshaft dephaser **ET083 Camshaft dephaser in defect mode** may assume two different statuses.

- **Status 1**
  This defect mode covers all faults that affect the dephaser position measurement. The dephaser is set to the minimum stop and the camshaft angle measurement is forced to 0.
  Tooth signal fault.
  Tooth/camshaft signal consistency diagnostic.

- **Status 2**
  This defect mode covers all faults affecting the dephaser (pulley and solenoid valve). The dephaser is set to the minimum stop.
  Electrical fault finding on the solenoid valve.
  Dephaser position fault finding procedure.

GETtheMANUALS.org

7. OPERATIONAL SAFETY

Warning lights illumination

The S3000 injection system manages the illumination of three warning lights and the display of warning messages according to the severity of the faults detected, with the aim of informing the customer and guiding fault finding.
The injection computer manages the illumination of warning lights and warning messages displayed on the instrument panel. These warning lights illuminate during the starting phase and in the event of an injection fault or engine overheating.
The warning light illumination signals reach the instrument panel via the multiplex network.

Warning light illumination principle

During the starting phase (START button pressed), the **OBD** (On-Board Diagnostic) warning light comes on for approximately **3 seconds** then goes out.

If there is an injection fault **(level 1)**, the message **CHECK INJECTION** is lit, followed by the **SERVICE** warning light. It indicates a reduced level of operation and a limited safety level.
The driver should carry out repairs as soon as possible.
Components involved:
– motorised throttle valve,
– accelerator pedal potentiometer,
– inlet manifold pressure sensor,
– computer,
– actuator feed,
– computer feed.

If there is a serious injection fault (**level 2**), the red engine symbol and the word **STOP** (display with information display only), appears with the message **ENGINE OVERHEATING** followed by the **STOP** warning light and a buzzer. If this happens, the vehicle must be stopped immediately.
When a fault causing excessive pollution in the exhaust gases is detected, **the orange OBD warning light** engine symbol is lit:
– **flashing** in the event of a fault which might cause destruction of the catalytic converter (destructive misfires). If this happens, the vehicle must be stopped immediately.
– **constantly** in the case of non-compliance with the anti-pollution standards (polluting misfires, catalytic converter fault, oxygen sensor faults, inconsistency between the oxygen sensors and canister fault).

Mileage travelled with fault

This parameter counts the mileage travelled with one of the injection fault warning lights lit: level 1 fault warning light (amber), coolant temperature overheating warning light, or OBD warning light. The meter can be reset using the diagnostic tool.

Special note
When running an actuator injector command, the instrument panel information display displays **OIL PRESSURE FAULT**. Disregard this message and do not deal with any fault (only in the present case where you are running an injection actuator command: expected system effect).

GETtheMANUALS.org

8. Mileage travelled with fault

These two parameters **PR105 Distance travelled with OBD fault warning light on** and **PR106 Distance travelled with fault warning light on** are used to count the distance travelled with one of the injection fault warning lights lit: **level 1 fault warning light** (amber) as well as the **OBD warning light**.
These counters can be reset to 0 using the diagnostic tool (clear faults command).

9. Inter-system engine functions

The inter-system connections concerning the particular requirements of engine management are as follows:

- **OBD warning light** illumination request by the instrument panel computer to prevent a pollution fault,
- **level 1 warning light** illumination request to warn of an operating safety fault relating to the injection system,
- **level 2 warning light** illumination request to warn of an operating safety fault or provide an engine overheating alert,
- fan unit activation request for engine cooling requirements, but also for the air conditioning and Automatic transmission/Sequential gearbox,
- air conditioning compressor shut-down request for engine programming requirements such as pulling away, performance, anti-stalling, overspeed, etc.
- passenger compartment heating resistor shut-down or fixing request for engine programming requirements such as pulling away, performance, anti-stall, overspeed, etc.

GETtheMANUALS.org

Connector (A), 32 tracks:

Track	Description
A1	Not used
A2	Not used
A3	CAN L1 passenger compartment multiplex connection
A4	CAN H1 passenger compartment multiplex connection
B1	Not used
B2	Engine speed TDC - signal
B3	Not used
B4	OBD diagnostic line K
C1	Not used
C2	Not used
C3	Not used
C4	+ Clutch switch signal
D1	+ after ignition feed via UPC
D2	Not used
D3	Not used
D4	Not used
E1	Not used
E2	Not used
E3	Not used
E4	Brake pedal normally closed switch no. 1 signal
F1	Not used
F2	+ 5 V supply, accelerator pedal potentiometer gang 2
F3	Accelerator pedal potentiometer signal, gang 2
F4	Accelerator pedal potentiometer earth, gang 2
G1	Not used
G2	Accelerator pedal potentiometer + 5 V supply (track 1)
G3	Not used
G4	Not used
H1	Not used
H2	Accelerator pedal potentiometer signal track 1
H3	Accelerator pedal potentiometer earth track 1
H4	Not used

GETtheMANUALS.org

Connector (B), 48 tracks:

Track	Description
A1	Injector 1 - control
A2	Injector 2 - control
A3	Injector 3 - control
A4	Injector 4 - control
B1	Not used
B2	Pinking sensor screening
B3	Pinking sensor + signal
B4	Pinking sensor - signal
C1	Not used
C2	Mastervac pressure sensor Analogue Input (only for F4R-Turbo engines fitted with automatic transmission)
C3	TDC engine speed (LPG) - signal
C4	Power-assisted steering pressure switch + signal
D1	Not used
D2	Not used
D3	Motorised throttle valve potentiometer gang 2 signal
D4	Power latch relay + output
E1	Turbocharging pressure sensor earth
E2	Air temperature sensor signal
E3	Air temperature sensor earth
E4	Position and engine speed sensor - signal (tooth signal)
F1	Turbocharging pressure sensor + signal
F2	Coolant temperature sensor + signal
F3	Engine speed and position sensor + signal (tooth signal)
F4	Coolant temperature sensor earth
G1	Turbocharging sensor + 5 V feed
G2	+ 5 V motorised throttle valve potentiometer signal
G3	Motorised throttle valve potentiometer gang 1 signal
G4	Motorised throttle valve potentiometers common earth
H1	Not used
H2	Manifold pressure sensor + 5 V feed
H3	Manifold pressure sensor + signal
H4	Manifold pressure sensor earth
J1	Not used
J2	Refrigerant pressure sensor + 5 V feed
J3	Refrigerant pressure + signal
J4	Engine speed and position sensor shielding earth
K1	Not used
K2	Not used
K3	Multiplex line L2 engine connection (LPG)
K4	Multiplex line H2 engine connection (LPG)
L1	Power earth 1
L2	Not used
L3	Vacuum pump relay + output (only for F4R-turbo engines with automatic transmission)
L4	Not used
M1	Power earth 2
M2	+ Battery supply
M3	Motorised throttle valve + signal
M4	Motorised throttle valve - signal

GETtheMANUALS.org

Connector (C), 48 tracks:

Track	Description
A1	Mechanical earth
A2	Downstream oxygen sensor + signal
A3	Not used
A4	Not used
B1	Upstream oxygen sensor + signal
B2	Downstream oxygen sensor - signal
B3	Not used
B4	Not used
C1	Upstream oxygen sensor - signal
C2	Not used
C3	Not used
C4	Not used
D1	Ignition coils and petrol pump relay control
D2	Not used
D3	Not used
D4	Not used
E1	Not used
E2	Inlet camshaft position sensor earth (only on K4M)
E3	Not used
E4	Not used
G1	Not used
G2	Not used
G3	Not used
G4	Not used
H1	Not used
H2	Not used
H3	Not used
H4	Not used
J1	Not used
J2	GMV2 relay - signal
J3	Not used
J4	Not used
K1	Not used
K2	Not used
K3	Not used
K4	Not used
L1	Power earth 3
L2	Upstream oxygen sensor heating - control
L3	Downstream oxygen sensor heating - control
L4	Not used
M1	Power earth 4
M2	Not used
M3	Ignition coil 2 - 3 - control
M4	Ignition coil 1 - 4 - control

GETtheMANUALS.org

1. COMPUTER REPLACEMENT AND PROGRAMMING OPERATIONS

The system can be programmed and reprogrammed via the diagnostic socket using the RENAULT CLIP diagnostic tool (**Consult Technical Note 3585A or follow the instructions provided by the diagnostic tool**).

IMPORTANT:
- **switch on the diagnostic tool (mains or cigarette lighter supply),**
- **Connect a battery charger (during the entire computer (re)programming procedure, the engine fan assemblies are triggered automatically).**
- **Observe the engine temperature setpoints given on the diagnostic tool before (re)programming.**

Whenever the computer has been programmed, reprogrammed or replaced:

- **Switch off the ignition.**
- **Start and then stop the engine (to initialise the computer) and wait 30 seconds.**
- **Turn on the ignition and use the diagnostic tool to carry out the following steps:**
- Use command **VP010 Enter VIN**.
- deal with any faults declared by the diagnostic tool. Clear the computer memory.
- program the flywheel sensor target and throttle stops,
- carry out a road test followed by another check with the diagnostic tool.

IMPORTANT
It is not possible to test an injection computer from the Parts Department because it cannot be fitted on any other vehicle.

2. REPLACING OR REMOVING THE TDC SENSOR

When replacing or removing the TDC sensor, program the flywheel target.

IMPORTANT
- The injection computer retains the immobiliser code for life,
- the system has no security code,
- it is forbidden to perform tests with computers borrowed from the Parts Department or from another vehicle which must then be returned. These computers are hard-coded.

GETtheMANUALS.org

3. REPLACING THE MOTORISED THROTTLE VALVE

When replacing a throttle valve, program the throttle stops using command **RZ005 Programming**.

IMPORTANT
Never drive the vehicle without having programmed the throttle stops.

4. CATALYTIC CONVERTER REPLACEMENT

IMPORTANT
Never perform **a Catalytic converter fault finding check** before following the steps below.

When replacing the Catalytic converter, be sure to observe the following recommendations:
- with the engine running,
- run the GMV for 2 cycles so that the catalytic converter can remember these conditions for normal use.

After carrying out the recommendations, activate command **SC006 Start OBD test: catalytic converter** using the diagnostic tool.

GETtheMANUALS.org

1. CONFIGURATION

Computer configuration by automatic detection

LC001	Vehicle speed connection type
	→ Multiplex
	→ Wire
LC003	Upstream oxygen sensor
	→ WITH
	→ NONE
LC004	Downstream oxygen sensor
	→ WITH
	→ NONE
LC005	Gearbox type
	→ CONNECTED
	→ NOT CONNECTED
LC009	Air conditioning
	→ CONNECTED
	→ NOT CONNECTED
LC010	Electronic stability program
	→ CONNECTED
	→ NOT CONNECTED
LC016	Air conditioning pressure signal management
	→ WITH
	→ NONE
LC018	Wire fed closure brake switch
	→ CONNECTED
	→ NOT CONNECTED

GETtheMANUALS.org

LC021	OBD sequencer fault finding - catalytic converter
	→ WITH
	→ NONE
LC022	OBD sequencer fault finding - combustion misfire
	→ WITH
	→ NONE
LC023	OBD sequencer fault finding - sensors
	→ WITH
	→ NONE
LC024	OBD warning light
	→ WITH
	→ NONE
LC025	Heating resistor
	→ WITH
	→ NONE
LC106	Air pump
	→ WITH
	→ NONE

2. PROGRAMMING

Programming the flywheel target

Accelerate up to **4000 rpm** in 3rd gear then decelerate to power take-up* speed. Then repeat immediately.

Check the programming using **ET089 Flywheel target programming**.

Programming the throttle end stops

Following replacement of the computer or motorised throttle valve, after turning on the ignition, wait **30 seconds** for the computer to memorise the MAXIMUM and MINIMUM stops.

Check the programming using **ET051 Throttle stop programming**.

* This is the moment when, during deceleration with no load, the engine drops to idling speed and recovers torque.

GETtheMANUALS.org

Tool fault	Associated DTC code	Description	Level 2 fault warning light (Red heater plugs "on" indicator light)	Level 1 Fault warning light (Orange preheating warning light)	No warning light on	OBD warning light
DF001	0115	Coolant temperature sensor circuit				1.DEF 2.DEF 3.DEF
DF002	0110	Air temperature sensor circuit				1.DEF 2.DEF
DF003	0105	Atmospheric pressure sensor circuit		1.DEF 2.DEF 3.DEF		1.DEF 2.DEF 3.DEF
DF004	0235	Turbocharger pressure sensor circuit				1.DEF 2.DEF 3.DEF
DF011	0641	Sensor supply voltage no. 1		1.DEF		
DF012	0651	Sensor feed voltage no. 2		1.DEF		
DF018	0480	Low-speed fan unit control circuit	CC.0/CC.1			
DF019	0481	High-speed fan unit control circuit	CC.0/CC.1			
DF026	0201	Cylinder 1 injector control circuit				CO/CC.0 CC.1/1.DEF
DF027	0202	Cylinder 2 injector control circuit				CO/CC.0 CC.1/1.DEF
DF028	0203	Cylinder 3 injector control circuit				CO/CC.0 CC.1/1.DEF
DF029	0204	Cylinder 4 injector control circuit				CO/CC.0 CC.1/1.DEF
DF038	0606	Computer			1.DEF	2.DEF/3.DEF 4.DEF/5.DEF
DF046	0560	Battery voltage			1.DEF	
DF054	0243	Turbocharging solenoid valve control circuit				CO/CC.0 CC.1
DF059	0301	Misfiring on cylinder 1				1.DEF/ 2.DEF/ 3.DEF

GETtheMANUALS.org

Tool fault	Associated DTC code	Description	Level 2 fault warning light (Red heater plugs "on" indicator light)	Level 1 Fault warning light (Orange preheating warning light)	No warning light on	OBD warning light
DF060	0302	Misfiring on cylinder 2				1.DEF/ 2.DEF/ 3.DEF
DF061	0303	Misfiring on cylinder 3				1.DEF/ 2.DEF/ 3.DEF
DF062	0304	Misfiring on cylinder 4				1.DEF/ 2.DEF/ 3.DEF
DF079	0638	Motorised throttle valve automatic control			6.DEF 7.DEF	1.DEF/2.DEF 3.DEF/4.DEF 5.DEF
DF080	0010	Camshaft dephaser circuit			CO/CC.0 CC.1/1.DEF 2.DEF/3.DEF 4.DEF/5.DEF	
DF081	0443	Canister bleed solenoid valve circuit				CO/CC.0 CC.1/1.DEF
DF082	0135	Upstream oxygen sensor heating circuit				CO/CC.0/ CC.1/ 1.DEF
DF083	0141	Downstream oxygen sensor heating circuit				CO/CC.0/ CC.1/ 1.DEF
DF084	0685	Actuator relay control circuit			1.DEF	
DF085	0672	Fuel pump relay control circuit				CO/CC.0 CC.1/1.DEF
DF087	0418	Air pump relay control circuit			CO/CC.0 CC.1/1.DEF	
DF091	0500	Vehicle speed signal				1.DEF/2.DEF
DF092	0130	Upstream oxygen sensor circuit				CO/CC.0 CC.1/1.DEF 2.DEF
DF093	0136	Downstream oxygen sensor circuit				CO/CC.0 CC.1/1.DEF
DF095	0120	Throttle potentiometer circuit gang 1		CO.0/CC.1 1.DEF		

GETtheMANUALS.org

Tool fault	Associated DTC code	Description	Level 2 fault warning light (Red heater plugs "on" indicator light)	Level 1 Fault warning light (Orange preheating warning light)	No warning light on	OBD warning light
DF096	0220	Throttle potentiometer circuit gang 2		CO.0/CC.1		
DF101	C122	Multiplex ESP connection			1.DEF	
DF105	0585	Cruise control/speed limiter on/off circuit			1.DEF	
DF106	0575	CC/SL selector switch on steering wheel			1.DEF	
DF109	0313	Low fuel level misfiring				1.DEF/2.DEF 3.DEF
DF119	0340	Camshaft sensor signal			1.DEF/2.DEF 3.DEF/4.DEF	
DF126	1604	Passenger compartment heating resistor (RCH)			1.DEF	
DF127	0703	Brake switch no. 1 circuit			1.DEF	
DF128	0571	Brake switch no. 2 circuit			1.DEF	
DF138	0830	Clutch pedal switch			1.DEF/2.DEF	
DF154	0335	Flywheel signal sensor circuit				1.DEF/2.DEF 3.DEF
DF167	1602	Heating element relay circuit			CO.0/CC.1	
DF196	0225	Pedal sensor circuit gang 1		CO.0/CC.1 1.DEF		
DF198	2120	Pedal sensor circuit gang 2		CO.0/CC.1		
DF228	C121	Brake signal			1.DEF	

GETtheMANUALS.org

Tool fault	Associated DTC code	Description	Level 2 fault warning light (Red heater plugs "on" indicator light)	Level 1 Fault warning light (Orange preheating warning light)	No warning light on	OBD warning light
DF330	0325	Pinking sensor circuit				1.DEF/2.DEF
DF369	C166	Injection/ Electric windscreen connection			1.DEF	
DF394	0420	Catalytic converter operating fault				1.DEF/2.DEF
DF398	0170	Fuel circuit operating fault				1.DEF/2.DEF
DF436	0300	Detection of engine misfiring				1.DEF/2.DEF 3.DEF
DF455	0460	Low fuel level signal			1.DEF/2.DEF	
DF457	0315	Flywheel target				1.DEF/2.DEF
DF460	0351	Cylinder 1 coil control				CO.0/CC.1 1.DEF
DF461	0352	Cylinder 2 coil control				CO.0/CC.1 1.DEF
DF462	0353	Cylinder 3 coil control				CO.0/CC.1 1.DEF
DF463	0354	Cylinder 4 coil control				CO.0/CC.1 1.DEF

GETtheMANUALS.org

Tool fault	Associated DTC code	Description	Level 2 fault warning light (Red heater plugs "on" indicator light)	Level 1 Fault warning light (Orange preheating warning light)	No warning light on	OBD warning light
DF508	2101	Motorised throttle valve control		1.DEF/2.DEF		
DF573	C164	Injection air conditioning connections →			1.DEF	
DF586	C155	Instrument panel ↔ injection connection			1.DEF	
DF612	1605	Oil vapour anti-icing resistor circuit			CO.0/CC.1	
DF617	1555	Vacuum pump relay circuit			1.DEF	
DF618	0555	Vacuum pump/ pressure switch system			CO.0/CC.1	

GETtheMANUALS.org

DF001 PRESENT	COOLANT TEMPERATURE SENSOR CIRCUIT 1.DEF: signal incoherence 2.DEF: voltage outside tolerances 3.DEF: non-compliance with emission control standards

NOTES	**Priority when dealing with a number of faults:** Deal with fault **DF011 Sensor supply voltage no. 1** first if it is present or stored.
	Special note: – the **OBD warning light** is lit, – low-speed fan is operating continuously.

Check the **cleanliness** and **condition** of the coolant temperature sensor and its connections.
Disconnect the battery and the injection computer.
Check the **cleanliness** and **condition** of the connections.
Repair if necessary.

Use the "Universal bornier" to check the **insulation** and **continuity** of the following connections:
For F4R and F4R Turbo engines only.
Computer, connector **B, track F2** → **track B2** of the coolant temperature sensor
Computer, connector **B, track F4** → **track B1** of the coolant temperature sensor
K4M engine only:
Computer, connector **B, track F2** → **track 3** of the coolant temperature sensor
Computer, connector **B, track F4** → **track 2** of the coolant temperature sensor
Repair if necessary.

Measure the **resistance** of the coolant temperature sensor between **tracks B1** and **B2 (F4R and F4R Turbo only)** and between **tracks 2** and **3 (K4M only)**.
Replace the coolant temperature sensor if the **resistance** is not:

12.6 kΩ	**± 1.1 kΩ**	**at a coolant temperature of -10˚C**
2.2 kΩ	**± 112 Ω**	**at a coolant temperature of 25˚C**
810 Ω	**± 39 Ω**	**at a coolant temperature of 50˚C**
282.6 Ω	**± 7.8 Ω**	**at a coolant temperature of 80˚C**
114.6 Ω	**± 2.6 Ω**	**at a coolant temperature of 110˚C**
87.7 Ω	**± 1.9 Ω**	**at a coolant temperature of 120˚C**

If the fault is still present, deal with the other faults then proceed with the conformity check.

AFTER REPAIR	Ensure that all the faults have been dealt with. Clear the stored faults. Do not clear the programming. To check that the system has been properly repaired: – there must be no further electrical faults, – programming has been carried out, – engine hot (minimum 75 ˚C), – run the engine at idling speed with all electrical consumers switched on for approximately 15 minutes. If the fault is still present, continue the fault finding procedure. – perform fault finding on the catalytic converter using the CLIP tool by running command **SC006 Run catalytic converter OBD test**.

GETtheMANUALS.org

DF002 PRESENT	AIR TEMPERATURE SENSOR CIRCUIT 1.DEF: voltage outside tolerances 2.DEF: non-compliance with emission control standards

NOTES	**Priority when dealing with a number of faults:** Deal with fault **DF012 Sensor feed voltage no.2** first, if it is present or stored.
	Special note: – The **OBD warning light** is lit.

Check the **cleanliness** and **condition** of the air temperature sensor and its connections.
Disconnect the battery and the injection computer.
Check the **cleanliness** and **condition** of the connections.
Repair if necessary.

Use the "Universal bornier" to check the **insulation** and **continuity** of the following connections:
Computer, connector **B, track E3** ⟶ **track 2** of the air temperature sensor
Computer, connector **B, track E2** ⟶ **track 1** of the air temperature sensor
Repair if necessary.

Measure the **resistance** of the air temperature sensor between **tracks 1** and **2**.
Replace the air temperature sensor if the **resistance** is not:

9.6 kΩ	**± 1 kΩ**	**at an air temperature of -10˚C**
2 kΩ	**± 0.12 kΩ**	**at an air temperature of 25˚C**
810 Ω	**± 47 Ω**	**at an air temperature of 50˚C**
309 Ω	**± 17 Ω**	**at an air temperature of 80˚C**

If the fault is still present, deal with the other faults then proceed with the conformity check.

AFTER REPAIR	Ensure that all the faults have been dealt with. Clear the stored faults. Do not clear the programming. To check that the system has been properly repaired: – there must be no further electrical faults, – programming has been carried out, – engine hot (minimum 75˚C), – run the engine at idling speed with all electrical consumers switched on for approximately 15 minutes. If the fault is still present, continue the fault finding procedure. – perform fault finding on the catalytic converter using the CLIP tool by running command **SC006 Run catalytic converter OBD test**.

S3000_V08_DF002P

GETtheMANUALS.org

DF003 PRESENT OR STORED	ATMOSPHERIC PRESSURE SENSOR CIRCUIT 1.DEF: signal incoherence 2.DEF: voltage outside tolerance range 3.DEF: non-compliance with emission control standards

NOTES	**Priority when dealing with a number of faults:** Deal with fault **DF012 Sensor feed voltage no.2** first if it is present or stored.
	Conditions for applying the fault finding procedure to stored faults: The fault is considered present if: – switch off the ignition, – switch on the ignition again, – wait **10 seconds** with the engine running at idle speed.
	Special note: – **OBD warning light** and **level 1 fault warning light** comes on, – Defect mode **type 2**: Loss of air flow modulation control, – On **F4R Turbo**, after having carried out fault finding for **DF003**, check **DF004 Turbocharger pressure sensor circuit**.

Check **the cleanliness and condition** of the manifold pressure sensor and its connections.
Repair if necessary.

If the fault is still present, check for **+ 5 V** on **track H2** and for **earth** on **track H4** of connector **B** of the injection computer.
Contact the Techline if it is not correct.

AFTER REPAIR	Ensure that all the faults have been dealt with. Clear the stored faults. Do not clear the programming. To check that the system has been properly repaired: – there must be no further electrical faults, – programming has been carried out, – engine hot (minimum 75˚C), – run the engine at idling speed with all electrical consumers switched on for approximately 15 minutes. If the fault is still present, continue the fault finding procedure. – perform fault finding on the catalytic converter using the CLIP tool by running command **SC006 Run catalytic converter OBD test**.

GETtheMANUALS.org

DF003 CONTINUED	

Disconnect the battery and the injection computer.
Check the **cleanliness and condition** of the connections.
Use the “Universal bornier” to check the **insulation and continuity** of the following connections:
For K4M and F4R engines only:
Computer, connector **B, track H2** → **track C** of the atmospheric pressure sensor
Computer, connector **B, track H3** → **track B** of the atmospheric pressure sensor
Computer, connector **B, track H4** → **track A** of the atmospheric pressure sensor
For F4R Turbo engines only:
Computer, connector **B, track H2** → **track 1** of the atmospheric pressure sensor
Computer, connector **B, track H3** → **track 3** of the atmospheric pressure sensor
Computer, connector **B, track H4** → **track 2** of the atmospheric pressure sensor
Repair if necessary.

If the fault is still present, deal with the other faults then proceed with the conformity check.

AFTER REPAIR	Ensure that all the faults have been dealt with. Clear the stored faults. Do not clear the programming. To check that the system has been properly repaired: – there must be no further electrical faults, – programming has been carried out, – engine hot (minimum 75 ˚C), – run the engine at idling speed with all electrical consumers switched on for approximately 15 minutes. If the fault is still present, continue the fault finding procedure. – perform fault finding on the catalytic converter using the CLIP tool by running command **SC006 Run catalytic converter OBD test**.

GETtheMANUALS.org

DF004 PRESENT OR STORED	TURBOCHARGING PRESSURE SENSOR CIRCUIT 1.DEF: voltage outside tolerances 2.DEF: data inconsistency 3.DEF: non-compliance with emission control standards

NOTES	**Priority when dealing with a number of faults:** Deal with fault **DF012 Sensor feed voltage no.2** first, if it is present or stored.
	Conditions for applying the fault finding procedure to stored faults: The fault is declared present after the ignition is switched on or with then engine running at an engine speed above **600 rpm**.
	Special note: – For **F4R-T** engines only, – the **OBD warning light** is lit, – Defect mode **types 5 and 6** for the throttle valve.

Check the **cleanliness**, **condition** and **fitting** of the turbocharger pressure sensor.
Repair if necessary.

If the fault is still present, manipulate the harness in order to note a change in fault status (present → stored).
Look for any damage to the wiring harness, and check the **condition and connection** of the connectors of the injection computer and turbocharger pressure sensor.
Repair if necessary.

If the fault is still present, check for **+ 5 V** on **track G1** and for **earth** on **track E1** of connector **B** of the injection computer.
Contact the Techline if it is not correct.

If the fault is still present, disconnect the battery and the injection computer.
Check the **insulation, continuity and the absence of interference resistance** on the following connections:

Computer connector **B, track E1** ⟶ **track A** of the pressure sensor
Computer connector **B, track F1** ⟶ **track B** of the pressure sensor
Computer connector **B, track G1** ⟶ **track C** of the pressure sensor

Repair if necessary.

If the fault is still present, deal with the other faults then proceed to the conformity check.

AFTER REPAIR	Ensure that all the faults have been dealt with. Clear the stored faults. Do not clear the programming. To check that the system has been properly repaired: – there must be no further electrical faults, – programming has been carried out, – engine hot (minimum 75˚C), – run the engine at idling speed with all electrical consumers switched on for approximately 15 minutes. If the fault is still present, continue the fault finding procedure. – perform fault finding on the catalytic converter using the CLIP tool by running command **SC006 Run catalytic converter OBD test**.

S3000_V08_DF004

GETtheMANUALS.org

DF011 PRESENT OR STORED	SENSOR SUPPLY VOLTAGE NO. 1 1.DEF: voltage outside tolerances 2.DEF: internal electronic fault

NOTES	**Special note:** – **level 1 fault warning light** illuminated, – defect mode **type 4** for the throttle valve.

Check the **cleanliness** and **condition** of the throttle valve connections.
Check the **cleanliness** and **condition** of the pedal potentiometer connections.
Disconnect the battery and the injection computer.
Check the **cleanliness** and **condition** of the connections.
Repair if necessary.

Sensor feed No. 1 is reserved for the following components:
– motorised throttle valve,
– pedal potentiometer gang 1,
– motorised throttle potentiometer gang 1 and 2.

To locate any internal fault on one of the sensors with a 5 V supply (short circuit), disconnect each of the sensors on the list above in turn, checking after each disconnection whether the fault changes status from present to stored.
If the faulty sensor is located, check its connections and that it is in order.
Replace the faulty sensor if necessary.

Use the "Universal bornier" to check the **insulation** and **continuity** of the following connections:
Computer, connector **B, track G3** ⟶ **track 2** of the motorised throttle valve gang 1
Computer, connector **B, track D3** ⟶ **track 6** of the motorised throttle valve gang 2
Computer, connector **B, track G2** ⟶ **track 5** of the throttle valve
Computer, connector **A, track G2** ⟶ **track 4** of the pedal potentiometer gang 1
Repair if necessary.

If the fault is still present, there is a computer fault, contact the Techline.

AFTER REPAIR	Ensure that all the faults have been dealt with. Clear the stored faults. Do not clear the programming. To check that the system has been properly repaired: – there must be no further electrical faults, – programming has been carried out, – engine hot (minimum 75˚C), – run the engine at idling speed with all electrical consumers switched on for approximately 15 minutes. If the fault is still present, continue the fault finding procedure. – perform fault finding on the catalytic converter using the CLIP tool by running command **SC006 Run catalytic converter OBD test**.

S3000_V08_DF011

GETtheMANUALS.org

DF012 PRESENT OR STORED	SENSOR SUPPLY VOLTAGE No. 2 1.DEF: voltage outside tolerances 2.DEF: internal electronic fault

NOTES	**Special note:** – **Level 1 fault warning light** illuminated, – Defect mode **type 4** for the throttle valve.

Check the **cleanliness** and **condition** of the throttle valve connections.
Check the **cleanliness** and **condition** of the pedal potentiometer connections.
Disconnect the battery and the injection computer.
Check the **cleanliness** and **condition** of the connections.
Repair if necessary.

Sensor feed no. 2 is reserved for the following components:
– pedal potentiometer gang 2,
– manifold pressure sensor.

To locate any internal fault on one of the sensors with a 5 V supply (short circuit), disconnect each of the sensors on the list above in turn, checking after each disconnection whether the fault changes status from present to stored.
If the faulty sensor is located, check its connections and that it is in order.
Replace the faulty sensor if necessary.

Use the "Universal bornier" to check the **insulation** and **continuity** of the following connections:
For K4M and F4R engines only:
Computer, connector **A, track F2** ⟶ **track 5** of the pedal potentiometer gang 2
Computer, connector **B, track H2** ⟶ **track C** of the manifold pressure sensor
For F4R Turbo engines only:
Computer, connector **A, track F2** ⟶ **track 5** of the pedal potentiometer gang 2
Computer, connector **B, track H2** ⟶ **track 1** of the manifold pressure sensor
Repair if necessary.

If the fault is still present, contact the Techline.

AFTER REPAIR	Ensure that all the faults have been dealt with. Clear the stored faults. Do not clear the programming. To check that the system has been properly repaired: – there must be no further electrical faults, – programming has been carried out, – engine hot (minimum 75°C), – run the engine at idling speed with all electrical consumers switched on for approximately 15 minutes. If the fault is still present, continue the fault finding procedure. – perform fault finding on the catalytic converter using the CLIP tool by running command **SC006 Run catalytic converter OBD test**.

GETtheMANUALS.org

DF018 PRESENT OR STORED	LOW SPEED FAN ASSEMBLY CONTROL CIRCUIT CC.0: short circuit to earth CC.1: short circuit to + 12 V

NOTES	**Priorities when dealing with a number of faults:** If fault **DF001 Coolant temperature sensor circuit** and **DF084 Actuator relay circuit** are present or stored, deal with them first.
	Conditions for applying the fault finding procedure to stored faults: The fault is declared present with the engine running or when running command **AC038 Low speed fan assembly relay**.
	Special notes: Status **ET143 Low speed fan assembly control** can help deal with this fault. **Level 2 fault warning light** illuminated.

Manipulate the wiring harness between the injection computer and the low speed fan assembly relay in order to note a change in status (present ↔ stored).
Look for possible damage to the wiring harness, check the connection and condition of the low-speed fan unit relay and its connections.
Replace the connector if necessary.

Disconnect the relay.
With the ignition on, check for **+ 12 volts** on **track 1** of the low speed fan assembly relay.
If there is no **+ 12 V** feed, use the "Universal bornier" to check the **continuity** of the following connections:

Injection computer,connector **B, track M2** → **track 1** of the low speed fan assembly relay
Main relay **track 5** →

Repair if necessary.

Check the **insulation and continuity** of the connection between:
Computer, connector C, **track G2** → **track 2** of the low speed fan assembly relay
Repair if necessary.

With the ignition on, check for **earth** on **track 2** of the low speed fan assembly relay.
If, with the ignition on, the computer does not control the low speed fan assembly relay on **track 2** through an earth, contact the Techline.

AFTER REPAIR	Ensure that all the faults have been dealt with. Clear the stored faults. Do not clear the programming. To check that the system has been properly repaired: – there must be no further electrical faults, – programming has been carried out, – engine hot (minimum 75˚C), – run the engine at idling speed with all electrical consumers switched on for approximately 15 minutes. If the fault is still present, continue the fault finding procedure. – perform fault finding on the catalytic converter using the CLIP tool by running command **SC006 Run catalytic converter OBD test**.

S3000_V08_DF018

GETtheMANUALS.org

DF019 PRESENT OR STORED	HIGH SPEED FAN ASSEMBLY CONTROL CIRCUIT CC.0: short circuit to earth CC.1: short circuit to + 12 V

NOTES	**Priorities when dealing with a number of faults:** Deal with fault **DF084 Actuator relay control circuit** first if it is present or stored.
	Conditions for applying the fault finding procedure to stored faults: The fault is declared present with the engine running or when running command **AC039 High speed fan assembly relay**.
	Special notes: Status **ET144 High speed fan assembly relay control** can help deal with this fault. **Level 2 fault warning light** illuminated.

Manipulate the wiring harness between the injection computer and the high speed fan assembly relay in order to note a change in status (present ↔ stored).
Look for possible damage to the wiring harness, check the connection and condition of the high-speed fan assembly relay and its connections.
Replace the connector if necessary.

Disconnect the relay.
With the ignition on, check for **+ 12 V** on **track 1** of the high speed fan assembly relay.
If there is no **+ 12 V** feed, use the "universal bornier" to check the **continuity** of the following connections:

Injection computer,connector **B, track M2** → **track 1** of the high speed fan assembly relay
Main relay **track 5** →

Repair if necessary.

Check the **insulation and continuity** of the connection between:

Computer, connector **C, track J2** → **track 2** of the high speed fan assembly relay

Repair if necessary.

With the ignition on, check for **earth** on **track 2** of the high speed fan assembly relay.
If, with the ignition on, the computer does not control the high speed fan assembly relay on **track 2** through an earth, contact the Techline.

AFTER REPAIR	Ensure that all the faults have been dealt with. Clear the stored faults. Do not clear the programming. To check that the system has been properly repaired: – there must be no further electrical faults, – programming has been carried out, – engine hot (minimum 75˚C), – run the engine at idling speed with all electrical consumers switched on for approximately 15 minutes. If the fault is still present, continue the fault finding procedure. – perform fault finding on the catalytic converter using the CLIP tool by running command **SC006 Run catalytic converter OBD test**.

GETtheMANUALS.org

DF026 PRESENT OR STORED	CYLINDER 1 INJECTOR CONTROL CIRCUIT CO: open circuit CC.0: short circuit to earth CC.1: short circuit to + 12 V 1.DEF: non-compliance with emission control standards

NOTES	**Priority when dealing with a number of faults:** Deal with faults **DF084 Actuator relay control circuit** or **DF046 Battery voltage** first if they are present or stored.
	Conditions for applying the fault finding procedure to stored faults: The fault is declared present after the engine has been running for a timed period of **10 seconds**.
	Special note: – **OBD warning light** illuminated.

Check the **cleanliness** and **condition** of the cylinder 1 injector and its connections.
Repair if necessary.

With the ignition on, check for **+ 12 V** on **track 1** of the cylinder 1 injector connector.
If there is no **+ 12 V** feed, use the "universal bornier" to check the **continuity** of the following connections:
Injection computer, connector **B, track M2** → **track 1** of the cylinder 1 injector
Main relay **track 5** →
Repair if necessary.

Disconnect the battery and the injection computer.
Check the **cleanliness** and **condition** of the connections.
Repair if necessary.

Use the "Universal bornier" to check the **insulation and continuity** on the following connection:
Computer, connector **B, track A1** → **track 2** of cylinder 1 injector
Repair if necessary.

Measure the **resistance** of cylinder 1 injector between **tracks 1** and **2**.
Replace the cylinder 1 injector if the **resistance** is not **12 Ω ± 0.6 Ω at 20˚C (only for F4R□Turbo)** and **14.5 Ω ± 0.75 Ω at 20˚C (only for K4M and F4R)**.

If the fault is still present, replace the cylinder 1 injector.
If the fault is still present, deal with the other faults then proceed with the conformity check.

AFTER REPAIR	Ensure that all the faults have been dealt with. Clear the stored faults. Do not clear the programming. To check that the system has been properly repaired: – there must be no further electrical faults, – programming has been carried out, – engine hot (minimum 75˚C), – run the engine at idling speed with all electrical consumers switched on for approximately 15 minutes. If the fault is still present, continue the fault finding procedure. – perform fault finding on the catalytic converter using the CLIP tool by running command **SC006 Run catalytic converter OBD test**.

GETtheMANUALS.org

DF027 PRESENT OR STORED	CYLINDER 2 INJECTOR CONTROL CIRCUIT CO: open circuit CC.0: short circuit to earth CC.1: short circuit to + 12 V 1.DEF: non-compliance with emission control standards

NOTES	**Priority when dealing with a number of faults:** Deal with faults **DF084 Actuator relay control circuit** or **DF046 Battery voltage** first if they are present or stored.
	Conditions for applying the fault finding procedure to stored faults: The fault is declared present after the engine has been running for a timed period of **10 seconds**.
	Special note: – **OBD warning light** illuminated.

Check the **cleanliness** and **condition** of the cylinder 2 injector and its connections.
Repair if necessary.

With the ignition on, check for **+ 12 V** on **track 1** of the cylinder 2 injector connector.
If there is no **+ 12 V** feed, use the "universal bornier" to check the **continuity** of the following connections:

Injection computer,connector **B, track M2** → **track 1** of cylinder 2 injector
Main relay **track 5** →

Repair if necessary.

Disconnect the battery and the injection computer.
Check the **cleanliness** and **condition** of the connections.
Repair if necessary.

Use the "Universal bornier" to check the **insulation and continuity** on the following connection:

Computer, connector **B, track A2** → **track 2** of the cylinder 2 injector

Repair if necessary.

Measure the **resistance** of cylinder 2 injector between **tracks 1** and **2**.
Replace the cylinder 2 injector if the **resistance** is not **12 Ω ± 0.6 Ω at 20˚C (only for F4R□Turbo)** and **14.5 Ω ± 0.75 Ω at 20˚C (only for K4M and F4R)**.

If the fault is still present, replace the cylinder 2 injector.
If the fault is still present, deal with the other faults then proceed with the conformity check.

AFTER REPAIR	Ensure that all the faults have been dealt with. Clear the stored faults. Do not clear the programming. To check that the system has been properly repaired: – there must be no further electrical faults, – programming has been carried out, – engine hot (minimum 75˚C), – run the engine at idling speed with all electrical consumers switched on for approximately 15 minutes. If the fault is still present, continue the fault finding procedure. – perform fault finding on the catalytic converter using the CLIP tool by running command **SC006 Run catalytic converter OBD test**.

S3000_V08_DF027

GETtheMANUALS.org

DF028 PRESENT OR STORED	CYLINDER 3 INJECTOR CONTROL CIRCUIT CO: open circuit CC.0: short circuit to earth CC.1: short circuit to + 12 V 1.DEF: non-compliance with emission control standards

NOTES	**Order of priority in the event of more than one fault:** Deal with faults **DF084 Actuator relay control circuit** or **DF046 Battery voltage** first if they are present or stored.
	Conditions for applying the fault finding procedure to stored faults: The fault is declared present after the engine has been running for a timed period of **10 seconds**.
	Special note: – **OBD warning light** illuminated.

Check the **cleanliness and condition** of the cylinder 3 injector and its connections.
Repair if necessary.

With the ignition on, check for **+ 12 V** on **track 1** of the cylinder 3 injector connector.
If there is no **+ 12 V** feed, use the "universal bornier" to check the **continuity** of the following connections:
Injection computer,connector **B, track M2** → **track 1** of the cylinder 3 injector
Main relay **track 5** →
Repair if necessary.

Disconnect the battery and the injection computer.
Check the **cleanliness** and **condition** of the connections.
Repair if necessary.

Use the "Universal bornier" to check the **insulation and continuity** on the following connection:
Computer, connector **B, track A3** → **track 2** of the cylinder 3 injector
Repair if necessary.

Measure the **resistance** of cylinder 3 injector between **tracks 1** and **2**.
Replace the cylinder 3 injector if the**resistance** is not **12 Ω ± 0.6 Ω at 20˚C (only for F4R□Turbo)** and**14.5 Ω ± 0.75 Ω at 20˚C (only for K4M and F4R)**.

If the fault is still present, replace the cylinder 3 injector.
If the fault is still present, deal with the other faults then proceed with the conformity check.

AFTER REPAIR	Ensure that all the faults have been dealt with. Clear the stored faults. Do not clear the programming. To check that the system has been properly repaired: – there must be no further electrical faults, – programming has been carried out, – engine hot (minimum 75˚C), – run the engine at idling speed with all electrical consumers switched on for approximately 15 minutes. If the fault is still present, continue the fault finding procedure. – perform fault finding on the catalytic converter using the CLIP tool by running command **SC006 Run catalytic converter OBD test**.

GETtheMANUALS.org

DF029 PRESENT OR STORED	INJECTOR CYLINDER 4 CONTROL CIRCUIT CO: open circuit CC.0: short circuit to earth CC.1: short circuit to + 12 V 1.DEF: non-compliance with emission control standards

NOTES	**Order of priority in the event of more than one fault:** Deal with faults **DF084 Actuator relay control circuit** or **DF046 Battery voltage** first if they are present or stored.
	Conditions for applying the fault finding procedure to stored faults: The fault is declared present after the engine has been running for a timed period of **10 seconds**.
	Special note: – **OBD warning light** illuminated.

Check the **cleanliness** and **condition** of the cylinder 4 injector and its connections.
Repair if necessary.

With the ignition on, check for **+ 12 V** on **track 1** of the cylinder 4 injector connector.
If there is no **+ 12 V** feed, use the "universal bornier" to check the **continuity** of the following connections:

Injection computer, connector **B , track M2** → **track 1** of the cylinder 4 injector
Main relay **track 5** →

Repair if necessary.

Disconnect the battery and the injection computer.
Check the **cleanliness** and **condition** of the connections.
Repair if necessary.

Use the "Universal bornier" to check the **insulation and continuity** on the following connection:

Computer, connector **B, track A4** → **track 2** of the cylinder 3 injector

Repair if necessary.

Measure the **resistance** of cylinder 4 injector between **tracks 1** and **2**.
Replace the cylinder 4 injector if the **resistance** is not **12 Ω ± 0.6 Ω at 20˚C (only for F4R Turbo)** and **14.5 Ω ± 0.75 Ω at 20˚C (only for K4M and F4R)**.

If the fault is still present, replace the cylinder 4 injector.
If the fault is still present, deal with the other faults then proceed with the conformity check.

AFTER REPAIR	Ensure that all the faults have been dealt with. Clear the stored faults. Do not clear the programming. To check that the system has been properly repaired: – there must be no further electrical faults, – programming has been carried out, – engine hot (minimum 75˚C), – run the engine at idling speed with all electrical consumers switched on for approximately 15 minutes. If the fault is still present, continue the fault finding procedure. – perform fault finding on the catalytic converter using the CLIP tool by running command **SC006 Run catalytic converter OBD test**.

S3000_V08_DF029

GETtheMANUALS.org

DF038 PRESENT	COMPUTER 1.DEF: electronic fault inside computer 2.DEF: accelerator pedal sensor circuit fault 3.DEF: torque reduction 4.DEF: downstream sensor activity 5.DEF: non-compliance with emission control standards

NOTES	**Priority when dealing with a number of faults:** Deal with the other faults first. **Special note:** – the **OBD warning light** is lit, – defect mode **types 1 to 6** for the throttle valve.

Contact Techline.

AFTER REPAIR	Ensure that all the faults have been dealt with. Clear the stored faults. Do not clear the programming. To check that the system has been properly repaired: – there must be no further electrical faults, – programming has been carried out, – engine hot (minimum 75˚C), – run the engine at idling speed with all electrical consumers switched on for approximately 15 minutes. If the fault is still present, continue the fault finding procedure. – perform fault finding on the catalytic converter using the CLIP tool by running command **SC006 Run catalytic converter OBD test**.

GETtheMANUALS.org

DF046 PRESENT	BATTERY VOLTAGE 1.DEF: voltage outside tolerances

NOTES	**Priority when dealing with a number of faults:** Apply the procedure for dealing with fault **DF084 Actuator relay control circuit** first if it is present or stored.

Disconnect the battery and the injection computer.
Check the **cleanliness** and **condition** of the computer connections.
Repair if necessary.

Use the Universal bornier to check **the continuity** of the following connections:
Computer,connector **B, track M2** ⟶ **track 5** of the main relay
Computer,connector **B, track D4** ⟶ **track 2** of the main relay
Repair if necessary.

– clean the battery terminals and all connections to the **+** and the **earth**.
– check the battery voltage.
– check the charging circuit (see **MR 395, Mechanical, 16A, Starting - Charging**).
Repair or replace the faulty components, if necessary.

AFTER REPAIR	Ensure that all the faults have been dealt with. Clear the stored faults. Do not clear the programming. To check that the system has been properly repaired: – there must be no further electrical faults, – programming has been carried out, – engine hot (minimum 75˚C), – run the engine at idling speed with all electrical consumers switched on for approximately 15 minutes. If the fault is still present, continue the fault finding procedure. – perform fault finding on the catalytic converter using the CLIP tool by running command **SC006 Run catalytic converter OBD test**.

S3000_V08_DF046

GETtheMANUALS.org

DF054 PRESENT OR STORED	TURBOCHARGING SOLENOID VALVE CONTROL CIRCUIT CO: open circuit CC.0: short circuit to earth CC.1: short circuit to + 12 V

NOTES	**Conditions for applying the fault finding procedure to stored faults:** The fault is declared present after the ignition is switched on or with then engine running at an engine speed above **600 rpm**.
	Special note: – for **F4R-Turbo** only, – the **OBD warning light** is lit, – defect mode **type 6** for the throttle valve.

Check the **cleanliness**, **condition** and **fitting** of the turbocharging solenoid valve.
Repair if necessary.

If the fault is still present, manipulate the harness in order to note a change in fault status (present → stored).
Look for possible damage to the wiring harness, check the **condition and connection** of the connectors of the injection computer and turbocharging solenoid valve.
Repair if necessary.

If the fault is still present, check (with the ignition on) for **+ 12 V** on **track 2** of the turbocharging solenoid valve.
If there is no **+ 12 V**, check the **insulation, continuity and the absence of interference resistance** on the following connections:

Injection computer,connector **B, track M2** → **track 2** of the turbocharging solenoid valve
Main relay **track 5** →

Repair if necessary.

If the fault is still present, disconnect the battery and the injection computer.
Check the **insulation, continuity and absence of interference resistance** on the following connection:

Computer, connector **C, track G4** → **track 1** of the turbocharging solenoid valve

Repair if necessary.

If the fault is still present, measure the **resistance** of the turbocharging solenoid valve between **tracks 1** and **2**.
Replace the turbocharging solenoid valve if the **resistance** is not **30 Ω ± 2 Ω at 23˚C**.

If the fault is still present, deal with the other faults then proceed to the conformity check.

AFTER REPAIR	Ensure that all the faults have been dealt with. Clear the stored faults. Do not clear the programming. To check that the system has been properly repaired: – there must be no further electrical faults, – programming has been carried out, – engine hot (minimum 75˚C), – run the engine at idling speed with all electrical consumers switched on for approximately 15 minutes. If the fault is still present, continue the fault finding procedure. – perform fault finding on the catalytic converter using the CLIP tool by running command **SC006 Run catalytic converter OBD test**.

GETtheMANUALS.org

DF059 PRESENT OR STORED	COMBUSTION MISFIRES ON CYLINDER 1 1.DEF: destructive misfiring 2.DEF: pollutant misfiring 3.DEF: non-compliance with emission control standards

NOTES	**Priority when dealing with a number of faults:** – ignition: **DF460, DF461, DF462** and **DF463**, – fuel supply circuit: **DF026, DF027, DF028, DF029** and **DF085**, – flywheel signal: **DF154** and **DF457**. Check whether there are other cylinders with a "Combustion misfire" fault reported by the tool before starting the following fault finding procedure.
	Conditions for applying the fault finding procedure to stored faults: The fault is considered present under the following conditions: – there must be no further electrical faults, – programming must be carried out. – engine warm (min 75˚), – engine idling with all electrical consumers switched on for approximately 15 minutes.
	Special note: – **OBD warning light** illuminated.

Misfiring on cylinder 1 only	The fault is probably due to a component that can only affect this cylinder: – check the cylinder 1 injector – check the condition and conformity of the spark plugs, – check the cylinder 1 pencil coil. If everything is in order, check the same components on cylinder 4 (to cover a possible cylinder recognition error).
Combustion misfires in cylinders 1 and 4 (see DF059 Combustion misfires in cylinder 1 and DF062 Combustion misfires in cylinder 4)	The fault is probably due to a component that affects a pair of cylinders: – check the ignition coil circuit concerned (apply the interpretation of fault **DF460 Cylinder no. 1 coil control** or **DF463 Cylinder no. 4 coil control**), – check the condition and conformity of the spark plugs.

AFTER REPAIR	Ensure that all the faults have been dealt with. Clear the stored faults. Do not clear the programming. To check that the system has been properly repaired: – there must be no further electrical faults, – programming has been carried out, – engine hot (minimum 75˚C), – run the engine at idling speed with all electrical consumers switched on for approximately 15 minutes. If the fault is still present, continue the fault finding procedure. – perform fault finding on the catalytic converter using the CLIP tool by running command **SC006 Run catalytic converter OBD test**.

S3000_V08_DF059

GETtheMANUALS.org

DF059 CONTINUED	

Combustion misfires on all four cylinders (see DF060, DF061 and DF062)	The fault is probably due to a component affecting all the cylinders: – check that the correct fuel is being used, – check the condition and conformity of the spark plugs.

If the fault is still present, carry out the following checks:
– check the flywheel sensor,
– check the condition and cleanliness of the flywheel,
– check the flywheel sensor mounting,
– check the sensor/flywheel air gap,
– check the cylinder compression's,
– check the entire petrol supply circuit (see **MR 395, Mechanical, 13A, Fuel supply**),
– check the entire ignition system (see **MR 395, Mechanical, 17A, Ignition**),
– check the hydraulic tappets if there is camshaft noise (see **MR 395, Mechanical, 11A, Top and front of engine**).

If the fault is still present, deal with the other faults then proceed with the conformity check.

AFTER REPAIR	Ensure that all the faults have been dealt with. Clear the stored faults. Do not clear the programming. To check that the system has been properly repaired: – there must be no further electrical faults, – programming has been carried out, – engine hot (minimum 75˚C), – run the engine at idling speed with all electrical consumers switched on for approximately 15 minutes. If the fault is still present, continue the fault finding procedure. – perform fault finding on the catalytic converter using the CLIP tool by running command **SC006 Run catalytic converter OBD test**.

GETtheMANUALS.org

DF060 PRESENT OR STORED	MISFIRING ON CYLINDER 2 1.DEF: destructive misfiring 2.DEF: pollutant misfiring 3.DEF: non-compliance with emission control standards

NOTES	**Priority when dealing with a number of faults:** – ignition: **DF460, DF461, DF462** and **DF463**, – fuel supply circuit: **DF026, DF027, DF028, DF029** and **DF085**, – flywheel signal: **DF154** and **DF457**. Check whether there are other cylinders with a "Combustion misfire" fault reported by the tool before starting the following fault finding procedure.
	Conditions for applying the fault finding procedure to stored faults: The fault is considered present under the following conditions: – there must be no further electrical faults, – programming must be carried out, – engine warm (min 75˚), – engine idling with all electrical consumers switched on for approximately 15 minutes.
	Special note: – **OBD warning light** illuminated.

Combustion misfires in cylinder 2 only	The fault is probably due to a component that can only affect this cylinder: – check the cylinder 2 injector – check the condition and conformity of the spark plugs, – check the cylinder 2 pencil coil. If everything is in order, check the same components on cylinder 3 (to correct a possible cylinder identification error).
Misfires in cylinders 2 and 3 (see DF060 Misfires in cylinder 2 and DF061 Misfires in cylinder 3)	The fault is probably due to a component that affects a pair of cylinders: – check the ignition coil circuit concerned (apply the interpretation of fault **DF461 Cylinder no. 2 coil control** or **DF462 Cylinder no. 3 coil control**), – check the condition and conformity of the spark plugs.

AFTER REPAIR	Ensure that all the faults have been dealt with. Clear the stored faults. Do not clear the programming. To check that the system has been properly repaired: – there must be no further electrical faults, – programming has been carried out, – engine hot (minimum 75˚C), – run the engine at idling speed with all electrical consumers switched on for approximately 15 minutes. If the fault is still present, continue the fault finding procedure. – perform fault finding on the catalytic converter using the CLIP tool by running command **SC006 Run catalytic converter OBD test**.

GETtheMANUALS.org

DF060 CONTINUED	

Combustion misfires on all four cylinders (see DF059, DF060 DF061 and DF062)	The fault is probably due to a component affecting all the cylinders: – check that the correct fuel is being used, – check the condition and conformity of the spark plugs.

If the fault is still present, carry out the following checks:
– check the flywheel sensor,
– check the condition and cleanliness of the flywheel,
– check the flywheel sensor mounting,
– check the sensor/flywheel air gap,
– check the cylinder compression's,
– check the entire petrol supply circuit (see **MR 395, Mechanical, 13A, Fuel supply**),
– check the entire ignition system (see **MR 395, Mechanical, 17A, Ignition**),
– check the hydraulic tappets if there is camshaft noise (see **MR 395, Mechanical, 11A, Top and front of engine**).

If the fault is still present, deal with the other faults then proceed with the conformity check.

AFTER REPAIR	Ensure that all the faults have been dealt with. Clear the stored faults. Do not clear the programming. To check that the system has been properly repaired: – there must be no further electrical faults, – programming has been carried out, – engine hot (minimum 75˚C), – run the engine at idling speed with all electrical consumers switched on for approximately 15 minutes. If the fault is still present, continue the fault finding procedure. – perform fault finding on the catalytic converter using the CLIP tool by running command **SC006 Run catalytic converter OBD test**.

GETtheMANUALS.org

DF061 PRESENT OR STORED	COMBUSTION MISFIRING ON CYLINDER 3 1.DEF: destructive misfiring 2.DEF: pollutant misfiring 3.DEF: non-compliance with emission control standards

NOTES	**Priority when dealing with a number of faults:** – ignition: **DF460, DF461, DF462** and **DF463**, – fuel supply circuit: **DF026, DF027, DF028, DF029** and **DF085**, – flywheel signal: **DF154** and **DF457**. Check whether there are other cylinders with a "Combustion misfire" fault reported by the tool before starting the following fault finding procedure.
	Conditions for applying the fault finding procedure to stored faults: The fault is considered present under the following conditions: – there must be no further electrical faults, – programming must be carried out. – engine warm (min 75˚), – engine idling with all electrical consumers switched on for approximately 15 minutes.
	Special note: – **OBD warning light** illuminated.

Combustion misfires in cylinder 3 only	The fault is probably due to a component that can only affect this cylinder: – check the cylinder 3 injector, – check the condition and conformity of the spark plugs, – check the cylinder 3 pencil coil. If everything is in order, check the same components on cylinder 2 (to correct a possible cylinder identification error).
Misfires in cylinders 2 and 3 (see DF060 Misfires in cylinder 2 and DF061 Misfires in cylinder 3)	The fault is probably due to a component that affects a pair of cylinders: – check the ignition coil circuit concerned (apply the interpretation of fault **DF461 Cylinder no. 2 coil control** or **DF462 Cylinder no. 3 coil control**), – check the condition and conformity of the spark plugs.

AFTER REPAIR	Ensure that all the faults have been dealt with. Clear the stored faults. Do not clear the programming. To check that the system has been properly repaired: – there must be no further electrical faults, – programming has been carried out, – engine hot (minimum 75˚C), – run the engine at idling speed with all electrical consumers switched on for approximately 15 minutes. If the fault is still present, continue the fault finding procedure. – perform fault finding on the catalytic converter using the CLIP tool by running command **SC006 Run catalytic converter OBD test**.

S3000_V08_DF061

GETtheMANUALS.org

DF061 CONTINUED	

Combustion misfires on all four cylinders (see DF059, DF060 DF061 and DF062)	The fault is probably due to a component affecting all the cylinders: – check that the correct fuel is being used, – check the condition and conformity of the spark plugs.

If the fault is still present, carry out the following checks:
– check the flywheel sensor,
– check the condition and cleanliness of the flywheel,
– check the flywheel sensor mounting,
– check the flywheel/sensor air gap,
– check the cylinder compression's,
– check the entire petrol supply circuit (see **MR 395, Mechanical, 13A, Fuel supply**),
– check the entire ignition system (see **MR 395, Mechanical, 17A, Ignition**),
– check the hydraulic tappets if there is camshaft noise (see **MR 395, Mechanical, 11A, Top and front of engine**).

If the fault is still present, deal with the other faults then proceed with the conformity check.

AFTER REPAIR	Ensure that all the faults have been dealt with. Clear the stored faults. Do not clear the programming. To check that the system has been properly repaired: – there must be no further electrical faults, – programming has been carried out, – engine hot (minimum 75˚C), – run the engine at idling speed with all electrical consumers switched on for approximately 15 minutes. If the fault is still present, continue the fault finding procedure. – perform fault finding on the catalytic converter using the CLIP tool by running command **SC006 Run catalytic converter OBD test**.

GETtheMANUALS.org

DF062 PRESENT OR STORED	COMBUSTION MISFIRING ON CYLINDER 4 1.DEF: destructive misfiring 2.DEF: pollutant misfiring 3.DEF: non-compliance with emission control standards

NOTES	**Priority when dealing with a number of faults:** – ignition: **DF460, DF461, DF462** and **DF463**, – fuel supply circuit: **DF026, DF027, DF028, DF029** and **DF085**, – flywheel signal: **DF154** and **DF457**. Check whether there are other cylinders with a "Combustion misfire" fault reported by the tool before starting the following fault finding procedure.
	Conditions for applying the fault finding procedure to stored faults: The fault is considered present under the following conditions: – there must be no further electrical faults, – programming must be carried out, – engine warm (min 75˚), – engine idling with all electrical consumers switched on for approximately 15 minutes.
	Special note: – **OBD warning light** illuminated.

Misfiring on cylinder 4 only	The fault is probably due to a component that can only affect this cylinder: – check the cylinder 4 injector, – check the condition and conformity of the spark plugs, – check the cylinder 4 pencil coil. If everything is okay, check the same components on cylinder 1 (to correct a possible cylinder identification error).
Combustion misfires on cylinders 1 and 4 (see DF059 Combustion misfires on cylinder 1 and DF062 Combustion misfires on cylinder 4)	The fault is probably due to a component that affects a pair of cylinders: – check the ignition coil circuit concerned (apply the interpretation of fault **DF460 Cylinder no. 1 coil control** or **DF463 Cylinder no. 4 coil control**), – check the condition and conformity of the spark plugs.

AFTER REPAIR	Ensure that all the faults have been dealt with. Clear the stored faults. Do not clear the programming. To check that the system has been properly repaired: – there must be no further electrical faults, – programming has been carried out, – engine hot (minimum 75˚C), – run the engine at idling speed with all electrical consumers switched on for approximately 15 minutes. If the fault is still present, continue the fault finding procedure. – perform fault finding on the catalytic converter using the CLIP tool by running command **SC006 Run catalytic converter OBD test**.

S3000_V08_DF062

GETtheMANUALS.org

DF062 CONTINUED	

Combustion misfires on all four cylinders (see DF059, DF060 DF061 and DF062)	The fault is probably due to a component affecting all the cylinders: – check that the correct fuel is being used, – check the condition and conformity of the spark plugs.

If the fault is still present, carry out the following checks:
– check the flywheel sensor,
– check the condition and cleanliness of the flywheel,
– check the flywheel sensor mounting,
– check the flywheel/sensor air gap
– check the cylinder compression's,
– check the entire petrol supply circuit (see **MR 395, Mechanical, 13A, Fuel supply**),
– check the entire ignition system (see **MR 395, Mechanical, 17A, Ignition**),
– check the hydraulic tappets if there is camshaft noise (see **MR 395, Mechanical, 11A, Top and front of engine**).

If the fault is still present, deal with the other faults then proceed with the conformity check.

AFTER REPAIR	Ensure that all the faults have been dealt with. Clear the stored faults. Do not clear the programming. To check that the system has been properly repaired: – there must be no further electrical faults, – programming has been carried out, – engine hot (minimum 75˚C), – run the engine at idling speed with all electrical consumers switched on for approximately 15 minutes. If the fault is still present, continue the fault finding procedure. – perform fault finding on the catalytic converter using the CLIP tool by running command **SC006 Run catalytic converter OBD test**.

GETtheMANUALS.org

DF079 PRESENT OR STORED	MOTORISED THROTTLE VALVE SERVO 1.DEF: detection of micro-cuts 2.DEF: motorised throttle stop search fault 3.DEF: safe mode 4.DEF: faulty flap return spring 5.DEF: motorised throttle valve flap vibrating 6.DEF: motorised throttle servo fault 7.DEF: inlet supply circuit

NOTES	**Priority when dealing with a number of faults:** Deal with faults **DF011 Sensor feed voltage no. 1, DF508 Motorised throttle control, DF095 Throttle potentiometer circuit gang 1** and **DF096 Throttle potentiometer circuit gang 2** first if they are present or stored.
	Conditions for applying the fault finding procedure to stored faults: The fault is considered present if: – the engine speed varies, – the engine air temperature is between **5˚C** and **105˚C**.
	Special note: Defect mode **types 1 and 2**: Limited engine speed

Check the **cleanliness**, **condition** and **fitting** of the throttle valve.
Repair if necessary.

If the fault is still present, manually check that the throttle valve **rotates correctly**.
Repair if necessary.

If the fault is still present, manipulate the harness to detect a change in status (present ↔ stored).
Look for possible damage to the wiring harness, check the **condition** and the **connection** of the connectors of the injection computer and motorised throttle valve.
Repair if necessary.

If the fault is still present, disconnect the battery and the injection computer.
Check **the insulation**, **continuity** and the **absence of interference resistance** on the following connections:

Computer, connector **B, track M3** → **track 3** of the motorised throttle valve
Computer, connector **B, track M4** → **track 5** of the motorised throttle valve
Computer, connector **B, track G4** → **track 6** of the motorised throttle valve
Computer, connector **B, track G3** → **track 1** of the motorised throttle valve
Computer, connector **B, track G2** → **track 2** of the motorised throttle valve
Computer, connector **B, track D3** → **track 4** of the motorised throttle valve

Repair if necessary.

AFTER REPAIR	Follow the instructions to confirm repair. Deal with any other faults. Clear the stored faults.

S3000_V08_DF079

GETtheMANUALS.org

DF079 CONTINUED	

If the fault is still present, measure the **resistance** of the throttle motor between **tracks 3** and **4**.
Replace the throttle valve if the **resistance** is not **1.57 Ω ± 0.5 Ω at 23˚C (only for F4R and F4R Turbo)** and **2.2 Ω ± 0.5 Ω at 23˚C (only for K4M)**.

If the throttle body is replaced, reinitialise the programming (RZ005).

If the fault is still present, deal with the other faults then proceed to the conformity check.

AFTER REPAIR	Follow the instructions to confirm repair. Deal with any other faults. Clear the stored faults.

GETtheMANUALS.org

DF080 PRESENT OR STORED	CAMSHAFT DEPHASER CIRCUIT CO: open circuit CC.0: short circuit to earth CC.1: short circuit to + 12 V 1.DEF: programming deviation 2.DEF: programming inconsistency 3.DEF: camshaft dephaser position error 4.DEF: dephaser automatic control outside the limits 5.DEF: non-compliance with emission control standards

NOTES	**Priority when dealing with a number of faults:** Apply the procedure for dealing with faults **DF084 Actuator relay control circuit** or **DF046 Battery voltage** first if they are present or stored. If faults **DF080, DF119 Camshaft sensor signal** and **DF154 Flywheel signal sensor circuit** are present, ignore **DF080** and deal with the other 2 faults first.
	Conditions for applying the fault finding procedure to stored faults: The fault is declared present after a road test.

CO/CC.0/CC.1	NOTES	**Special note:** **For K4M and F4R engines only.**

Check the cleanliness and condition of the camshaft dephaser connections.
Check the cleanliness and condition of the camshaft dephaser.
Repair if necessary.

If the fault is still present, with the ignition on, check for **+ 12 V** on **track 1** of the camshaft dephaser.
Check **the insulation, continuity and the absence of interference resistance** between the following connections:

Injection computer, connector **B track M2** ⟶ **track 1** of the camshaft **dephaser**
Main relay **track 5**

Repair if necessary.

Use the "Universal bornier" to check the **insulation and continuity** on the following connection:

Injection computer, connector **B, track L3** ⟶ **track 2** of the camshaft dephaser

Repair if necessary.

AFTER REPAIR	Follow the instructions to confirm repair. Deal with any other faults. Clear the stored faults.

GETtheMANUALS.org

DF081 PRESENT OR STORED	CANISTER BLEED SOLENOID VALVE CIRCUIT CO: open circuit CC.0: short circuit to earth CC.1: short circuit to + 12 V 1.DEF: non-compliance with emission control standards

NOTES	**Priority when dealing with a number of faults:** Deal with faults **DF084 Actuator relay control circuit** or **DF046 Battery voltage** first if they are present or stored.
	Conditions for applying the fault finding procedure to stored faults: The fault is declared present after the ignition has been switched on.
	Special note: – **OBD warning light** illuminated.

Check that fuse **F8 (10A)** is in **good condition and is working correctly**. Repair if necessary.
Check **the cleanliness** and **condition** of the connections of the fuel vapour absorber bleed solenoid valve. Repair if necessary.
Measure the **resistance** of the fuel vapour absorber bleed solenoid valve. Replace the fuel vapour absorber bleed solenoid valve if the **resistance** is not **26** Ω ± 4 Ω αττ 23⌋X.
Check for **+ 12 V** on **track 1** of the connector of the fuel vapour absorber bleed solenoid valve, with the ignition on. Use the "Universal bornier" to check the **insulation** and **continuity** on the following connection: Computer, connector **B, track M2** ⟶ **track 1** of the fuel vapour absorber bleed solenoid valve Main relay **track 5** Repair if necessary.
Disconnect the battery. Disconnect the computer. Check the **cleanliness** and **condition** of the connections. Use the "Universal bornier" to check the **insulation** and **continuity** on the following connection: Computer, connector **C, track F2** ⟶ **track 2** of the fuel vapour absorber bleed solenoid valve Repair if necessary.
If the fault is still present, deal with the other faults then proceed with the conformity check.

AFTER REPAIR	Follow the instructions to confirm repair. Deal with any other faults. Clear the stored faults.

GETtheMANUALS.org

DF082 PRESENT OR STORED	UPSTREAM OXYGEN SENSOR HEATING CIRCUIT CO: open circuit CC.0: short circuit to earth CC.1: short circuit to + 12 V 1.DEF: non-compliance with emission control standards

NOTES	**Priority when dealing with a number of faults:** Deal with faults **DF084 Actuator relay control circuit** or **DF046 Battery voltage** first if they are present or stored.
	Conditions for applying the fault finding procedure to stored faults: The fault is declared present after the engine has been running for a timed period of **10 seconds**.
	Special note: – **OBD warning light** illuminated.

Check the **cleanliness** and **condition** of the upstream oxygen sensor connections. Repair if necessary.
With the ignition on, check for **+ 12 V** on **track A** of the upstream oxygen sensor connector. Use the "Universal bornier" to check the **insulation** and **continuity** on the following connection: Computer, connector **B, track M2** ⟶ **track A** of the upstream oxygen sensor Repair if necessary.
Disconnect the battery and the injection computer. Check the **cleanliness** and **condition** of the connections. Use the "Universal bornier" to check the **insulation** and **continuity** on the following connection: Computer, connector **C, track L2** ⟶ **track B** of the upstream oxygen sensor Repair if necessary.
Measure the heating **resistance** between **tracks A** and **B** of the upstream oxygen sensor. Replace the upstream oxygen sensor if the **resistance** is not **9 Ω ± 0.5 Ω at 20˚C**.
If the fault is still present, deal with the other faults then proceed with the conformity check.

AFTER REPAIR	Follow the instructions to confirm repair. Deal with any other faults. Clear the stored faults.

GETtheMANUALS.org

DF083 PRESENT OR STORED	DOWNSTREAM OXYGEN SENSOR HEATING CIRCUIT CO: open circuit CC.0: short circuit to earth CC.1: short circuit to + 12 V 1.DEF: non-compliance with emission control standards

NOTES	**Priority when dealing with a number of faults:** Deal with faults **DF084 Actuator relay control circuit** or **DF046 Battery voltage** first if they are present or stored.
	Conditions for applying the fault finding procedure to stored faults: The fault is declared present after the engine has been running for a timed period of **10 seconds**.
	Special note: – **OBD warning light** illuminated.

Check **the cleanliness** and **condition** of the downstream oxygen sensor connections.
Repair if necessary.

Check for **+ 12 V** on **track A** of the downstream oxygen sensor connector with the ignition on.
Use the "Universal bornier" to check the **insulation and continuity** on the following connection:
Computer, connector **B, track M2** ⟶ **track A** of the downstream oxygen sensor
Repair if necessary.

Disconnect the battery and the injection computer.
Check the **cleanliness** and **condition** of the connections.
Use the "Universal bornier" to check the **insulation and continuity** on the following connection:
Computer, connector **C, track L3** ⟶ **track B** of the downstream oxygen sensor
Repair if necessary.

Measure the heating **resistance** between **tracks A** and **B** of the downstream oxygen sensor.
Replace the downstream oxygen sensor if the **resistance** is not **9 Ω ± 0.5 Ω at 20°C**.

If the fault is still present, deal with the other faults then proceed with the conformity check.

AFTER REPAIR	Follow the instructions to confirm repair. Deal with any other faults. Clear the stored faults.

GETtheMANUALS.org

DF084 PRESENT OR STORED	ACTUATOR RELAY CONTROL CIRCUIT 1.DEF: open circuit or short circuit

NOTES	None.

Disconnect the battery and the injection computer.
Check the **cleanliness** and **condition** of the computer connections.
Check the **cleanliness** and **condition** of the UCH computer connections.
Repair if necessary.

Use the "Universal bornier" to check the **insulation** and **continuity** on the following connection:
Computer,connector **B, track D4** ⟶ **track 2** of the main relay
Repair if necessary.

If the fault is still present, carry out fault finding on the UCH (see **87G, Connection unit**).
Contact Techline.

AFTER REPAIR	Follow the instructions to confirm repair. Deal with any other faults. Clear the stored faults.

GETtheMANUALS.org

DF085 PRESENT OR STORED	FUEL PUMP RELAY CONTROL CIRCUIT CO: open circuit CC.0: short circuit to earth CC.1: short circuit to + 12 V 1.DEF: non-compliance with emission control standards

NOTES	**Conditions for applying the fault finding procedure to stored faults:** The fault is declared present after the ignition has been switched on.
	Special note: – **OBD warning light** illuminated.

Disconnect the battery and the injection computer.
Check the **cleanliness** and **condition** of the computer connections.
Check the **cleanliness** and **condition** of the connections of the fuel pump relay connector.
Repair if necessary.

Use the "Universal bornier" to check the **insulation** and **continuity** on the following connection:
Computer, connector **C, track D1** ⟶ **track 2** of the fuel pump relay
Repair if necessary.

If the fault is still present, contact the Techline.

AFTER REPAIR	Follow the instructions to confirm repair. Deal with any other faults. Clear the stored faults.

GETtheMANUALS.org

DF087 PRESENT OR STORED	AIR PUMP RELAY CONTROL CIRCUIT CO: open circuit CC.0: short circuit to earth CC.1: short circuit to + 12 V 1.DEF: non-compliance with emission control standards

IMPORTANT
If the fault is stored, do not clear it; there may be an OBD fault (On Board Diagnostic).
Refer to the Current environment on the diagnostic tool.
If status **ET049** is **ACTIVE**, carry out the fault finding procedure below.

NOTES	**Order of priority in the event of more than one fault:** If faults **DF198 Pedal sensor circuit gang 2** or **DF046 Battery voltage** are present, deal with them first.
	Conditions for applying the fault finding procedure to stored faults: The fault is declared present after the ignition has been switched on.
	Special note: Only for **F4R Turbo** engines equipped with an **automatic transmission**.

Check the **cleanliness**, **condition** and **fitting** of the air pump relay.
Repair or replace the air pump relay if necessary.

If the fault is still present with the ignition on, check for **earth** on **track 2** of the air pump relay.
If, with the ignition on, the computer does not control the air pump relay on **track 2** through an earth, contact the Techline.

If the fault is still present, check (with the ignition on) for **+ 12 V** on **track 1** of the air pump relay.
Check the **insulation, continuity and the absence of interference resistance** between the following connections:

Injection computer,connector **B, track M2** → **track 1** of the air pump relay
Main relay **track 5** →

Repair if necessary.

If the fault is still present, disconnect the battery and the injection computer.
Check the **insulation, continuity and the absence of interference resistance** between the following connections:

Computer, connector **C, track H2** → **track 2** of the air pump relay

Repair if necessary.

If the fault is still present, deal with the other faults then proceed to the conformity check.

AFTER REPAIR	Follow the instructions to confirm repair. Deal with any other faults. Clear the stored faults.

GETtheMANUALS.org

DF091 PRESENT OR STORED	VEHICLE SPEED SIGNAL 1.DEF: voltages outside tolerance range 2.DEF: non-compliance with emission control standards

NOTES	**Conditions for applying the fault finding procedure to stored faults:** The fault is declared present with the engine running.
	Special note: – **OBD warning light** illuminated.

Run a multiplex network test (see **88B, Multiplexing**).
If the fault is still present, carry out fault finding on the **ABS - ESP system** (see **38C, Anti-lock braking system**).

AFTER REPAIR	Follow the instructions to confirm repair. Deal with any other faults. Clear the stored faults.

GETtheMANUALS.org

DF092 PRESENT OR STORED	UPSTREAM OXYGEN SENSOR CIRCUIT CO: open circuit CC.0: short circuit to earth CC.1: short circuit to + 12 V 1.DEF: component in bad condition 2.DEF: non-compliance with emission control standards

NOTES	**Priority when dealing with a number of faults:** If faults **DF011 Sensor feed voltage no.1, DF046 Battery voltage** or **DF084 Actuator relay control circuit** are present or stored, deal with them first.
	Conditions for applying the fault finding procedure to stored faults: The fault is declared present with the engine running for **5 minutes** in richness regulation.
	Special note: – **OBD warning light** illuminated.

Check the **cleanliness** and **condition** of the upstream oxygen sensor connections.
Repair if necessary.

Disconnect the battery and the injection computer.
Check the **cleanliness** and **condition** of the connections.
Use the "Universal bornier" to check the **insulation** and **continuity** of the following connections:
Computer, **connector C, track C1** → **track D** of the upstream oxygen sensor
Computer, **connector C, track B1** → **track C** of the upstream oxygen sensor
Repair if necessary.

If the fault is still present, deal with the other faults then proceed with the conformity check.

AFTER REPAIR	Follow the instructions to confirm repair. Deal with any other faults. Clear the stored faults.

GETtheMANUALS.org

DF093 PRESENT OR STORED	DOWNSTREAM OXYGEN SENSOR CIRCUIT CO: open circuit CC.0: short circuit to earth CC.1: short circuit to + 12 V 1.DEF: non-compliance with emission control standards

NOTES	**Priority when dealing with a number of faults:** Apply the procedure for dealing with faults **DF011 Sensor supply voltage no.1, DF046 Battery voltage**, **DF082 Upstream oxygen sensor heating circuit** or **DF084 Actuator relay control circuit** first if they are present or stored.
	Conditions for applying the fault finding procedure to stored faults: The fault is declared present after: – a road test driving smoothly after the fan assembly has been running and **ET056 Double richness loop** is **ACTIVE**, – a smooth driving road test after the fan unit has been in operation, immediately followed by a road test on a slope at no load (injection cut-off in the deceleration phase).
	Special note: – **OBD warning light** illuminated.

Check **the cleanliness** and **condition** of the downstream oxygen sensor connections.
Repair if necessary.

Disconnect the battery and the injection computer.
Check the **cleanliness** and **condition** of the connections.
Use the "Universal bornier" to check **the insulation** and **continuity** of the following connections:
Computer, **connector C, track B2** → **track D** of the downstream oxygen sensor
Computer, **connector C, track A2** → **track C** of the downstream oxygen sensor
Repair if necessary.

If the fault is still present, deal with the other faults then proceed with the conformity check.

AFTER REPAIR	Follow the instructions to confirm repair. Deal with any other faults. Clear the stored faults.

GETtheMANUALS.org

DF095 PRESENT OR STORED	THROTTLE POTENTIOMETER CIRCUIT GANG 1 CO.0: open circuit or short circuit to earth CC.1: short circuit to + 12 V 1.DEF: signal incoherence

WARNING
Never drive the vehicle without having confirmed that no faults involving the throttle valve are present.

NOTES	**Priority when dealing with a number of faults:** If the fault **DF011 Sensor supply voltage no.1** is present or stored, deal with it first.
	Conditions for applying the fault finding procedure to stored faults: The fault is considered present after a change in the engine speed.
	Special note: – **level 1 fault warning light** illuminated. – Defect mode **types 3 and 4**: Loss of monitoring system → Limited throttle opening.

Check the **cleanliness** of the throttle valve and the **correct rotation** of the throttle (no hard point).
Check the **cleanliness** and **condition** of the throttle valve connections.
Repair if necessary.

Disconnect the battery and the injection computer.
Check the **cleanliness and condition** of the connections.
Use the "Universal bornier" to check the **insulation** and **continuity** of the following connections:
For F4R and F4R Turbo engines only.

Computer, connector **B, track G4** → **track 1** of the throttle potentiometer gang 1
Computer, connector **B, track G3** → **track 2** of the throttle potentiometer gang 1
Computer, connector **B, track G2** → **track 5** of the throttle potentiometer gang 1

K4M engine only:

Computer, connector **B, track G4** → **track 6** of the throttle potentiometer gang 1
Computer, connector **B, track G3** → **track 1** of the throttle potentiometer gang 1
Computer, connector **B, track G2** → **track 2** of the throttle potentiometer gang 1

Repair if necessary.

If the throttle body is replaced, reinitialise the programming (RZ005).

If the fault is still present, deal with the other faults then proceed with the conformity check.

AFTER REPAIR	Follow the instructions to confirm repair. Deal with any other faults. Clear the stored faults.

S3000_V08_DF095

GETtheMANUALS.org

DF096 PRESENT OR STORED	THROTTLE POTENTIOMETER CIRCUIT GANG 2 CO.1: open circuit or short circuit to + 12 V CC.0: short circuit to earth

WARNING
Never drive the vehicle without having confirmed that no faults involving the throttle valve are present.

NOTES	**Priority when dealing with a number of faults:** If the fault **DF011 Sensor supply voltage no.1** is present or stored, deal with it first.
	Conditions for applying the fault finding procedure to stored faults: The fault is considered present after a change in the engine speed.
	Special note: – **level 1 fault warning light** illuminated. – defect mode **type 4**: Loss of monitoring system → Limited throttle opening.

Check the **cleanliness** of the throttle valve and the **correct rotation** of the throttle (no hard point).
Check the **cleanliness** and **condition** of the throttle valve connections.
Repair if necessary.

Disconnect the battery and the injection computer.
Check the **cleanliness** and **condition** of the connections.
Use the "Universal bornier" to check the **insulation** and **continuity** of the following connections:
For F4R and F4R Turbo engines only.

Computer, connector **B, track D3** ⟶ **track 6** of the throttle potentiometer gang 2
Computer, connector **B, track G2** ⟶ **track 5** of the throttle potentiometer gang 2
Computer, connector **B, track G4** ⟶ **track 1** of the throttle potentiometer gang 2

K4M engine only:

Computer, connector **B, track D3** ⟶ **track 4** of the throttle potentiometer gang 2
Computer, connector **B, track G2** ⟶ **track 2** of the throttle potentiometer gang 2
Computer, connector **B, track G4** ⟶ **track 6** of the throttle potentiometer gang 2

Repair if necessary.

If the throttle body is replaced, reinitialise the programming (RZ005).

If the fault is still present, deal with the other faults then proceed with the conformity check.

AFTER REPAIR	Follow the instructions to confirm repair. Deal with any other faults. Clear the stored faults.

GETtheMANUALS.org

DF101 PRESENT OR STORED	ELECTRONIC STABILITY PROGRAM MULTIPLEX CONNECTION 1.DEF: CAN connection fault

NOTES	None.

Run a multiplex network test (see **88B, Multiplexing**).
If the fault is still present, carry out fault finding on the **ABS - ESP system** (see **38C, Anti-lock braking system**).

AFTER REPAIR	Follow the instructions to confirm repair. Deal with any other faults. Clear the stored faults.

GETtheMANUALS.org

DF105 PRESENT OR STORED	CRUISE CONTROL/SPEED LIMITER ON/OFF CIRCUIT 1.DEF: Cruise control/speed limiter on/off button inconsistency

NOTES	**Conditions for applying the fault finding procedure to stored faults:** The fault is declared present following a road test during which the cruise control and speed limiter functions are used.

Check the cleanliness and condition of the cruise control/speed limiter on/off switch and its connections. Repair if necessary.
Check for **+ 12 V** on **track A2** of the cruise control or speed limiter selector switch connector with the ignition on. Repair if necessary.
Disconnect the battery. Disconnect the computer. Check the cleanliness and condition of the connections. Use the "Universal bornier" to check the **insulation and continuity** of the following connections: Computer,connector **A, track A2** ⟶ **track A3** of the cruise control - speed limiter on/off switch Computer,connector **A, track C3** ⟶ **track B1** of the cruise control - speed limiter on/off switch If the fault is still present, check the intermediate connector **R262** on **track A6** and on **track A7**. Repair if necessary.
If the fault is still present, deal with the other faults then proceed to the conformity check.

AFTER REPAIR	Follow the instructions to confirm repair. Deal with any other faults. Clear the stored faults.

GETtheMANUALS.org

DF106 PRESENT OR STORED	CRUISE CONTROL/SPEED LIMITER SELECTOR SWITCH ON STEERING WHEEL 1.DEF: inconsistent data

IMPORTANT
The airbag must be removed in order to remove or check the cruise control/speed limiter control switches (see **MR 395, Mechanical, 88C, Airbag and pretensioners**).

NOTES	**Conditions for applying the fault finding procedure to stored faults:** The fault is declared present following a road test during which the cruise control and speed limiter functions are used.

Check the cleanliness and condition of the incrementing switches on the steering wheel and their connections.
Repair if necessary.

Check that the earth is present on **track 2** of the incrementing switches on the steering wheel.
Repair if necessary.

Disconnect the battery.
Disconnect the computer. Check the cleanliness and condition of the connections.
Use the "Universal bornier" to check the **insulation and continuity** of the following connections:
Computer, connector **A, track D2** ⟶ **track 2** of the steering wheel control switch
Computer, connector **A, track D3** ⟶ **track 1** of the steering wheel control switch
If the fault is still present, check the intermediate connector **R262** on **track A8** and on **track A9**.
Repair if necessary.

If the fault is still present, deal with the other faults then proceed to the conformity check.

AFTER REPAIR	Follow the instructions to confirm repair. Deal with any other faults. Clear the stored faults.

GETtheMANUALS.org

DF109 PRESENT OR STORED	LOW FUEL LEVEL MISFIRING 1.DEF: destructive misfiring 2.DEF: polluting misfiring

NOTES	**Priority when dealing with a number of faults:** – fuel supply circuit: **DF085, DF379, DF380, DF381** and **DF382**. – combustion misfire: **DF059, DF060, DF061, DF062, DF065** with **1.DEF** or **2.DEF**.
	Conditions for applying the fault finding procedure to stored faults: The fault is present after starting the engine and under the following conditions: – there must be no further electrical faults, – programming must be carried out, – warm engine (minimum **75˚C**), – engine idling with all electrical consumers switched on for approximately **15 minutes**.
	Special note: – **OBD warning light** illuminated.

Check that there is fuel in the tank.
Check that the correct fuel is being used.

If there is no present or stored cylinder misfire fault, the misfire was caused by the low fuel level.
Clear fault **DF109** by running command **RZ007 Fault memory**.

AFTER REPAIR	Ensure that all the faults have been dealt with. Clear the stored faults. Do not clear the programming. To check that the system has been properly repaired: – there must be no further electrical faults, – programming has been carried out, – the engine must be warm (minimum **75˚C**). – run the engine at idle speed with all electrical consumers switched on for approximately **15 minutes**. If the fault is still present, continue the fault finding procedure. - run fault finding on the catalytic converter using the **CLIP diagnostic tool** by running command **SC006 Run catalytic converter OBD test**.

GETtheMANUALS.org

DF119 PRESENT OR STORED	CAMSHAFT SENSOR SIGNAL 1.DEF: camshaft tooth event 2.DEF: dephasing measurement out of range 3.DEF: tooth lost 4.DEF: non-compliance with emission control standards

NOTES	**Priority when dealing with a number of faults:** Apply the procedure for dealing with faults **DF084 Actuator relay control circuit** or **DF046 Battery voltage** first if they are present or stored. In the event of a combination of faults **DF080 Camshaft dephaser circuit**, **DF119** and **DF154 Flywheel signal sensor circuit**, ignore **DF080** and deal with the other 2 faults first.
	Conditions for applying the fault finding procedure to stored faults: The fault is declared present after a road test.

Check the **cleanliness and condition** of the camshaft sensor connections.
Check the **cleanliness and condition** of the camshaft sensor.
Repair if necessary.

If the fault is still present, check (with the ignition on) for **+ 12 V** on **track 3** of the camshaft sensor.
Check the **insulation, continuity and the absence of interference resistance** between the following connections:

Injection computer, connector **B, track M2** → **track 3** of the camshaft sensor
Main relay **track 5** →

Repair if necessary.

Disconnect the battery.
Disconnect the computer. Check the **cleanliness and condition** of the connections.
Use the "Universal bornier" to check the **insulation and continuity** of the following connections:

Computer,connector **C, track E2** → **track 1** of the camshaft sensor
Computer,connector **C, track F1** → **track 2** of the camshaft sensor

Repair if necessary.

If the fault is still present, there is a fault on the camshaft sensor target (see **MR 395, Mechanical, 11A, Top and front of engine**).

AFTER REPAIR	Follow the instructions to confirm repair. Deal with any other faults. Clear the stored faults.

GETtheMANUALS.org

DF126 PRESENT OR STORED	PASSENGER COMPARTMENT HEATING RESISTOR 1.DEF: CAN connection fault

NOTES	**Conditions for applying the fault finding procedure to stored faults:** The fault is present when the ignition is switched on.

Run a multiplex network test (see **88B, Multiplexing**).
If the fault is still present, carry out fault finding on the UCH (see **87B, Connection unit**).

AFTER REPAIR	Follow the instructions to confirm repair. Deal with any other faults. Clear the stored faults.

GETtheMANUALS.org

DF127 PRESENT OR STORED	BRAKE SWITCH 1 CIRCUIT 1.DEF: fault on one of the two brake pedal contacts

NOTES	**Conditions for applying the fault finding procedure to stored faults:** The fault is declared present: – with the engine running, – brake pedal depressed, – cruise control switch in the ON position.

Check that the pedal assembly is in good condition.
Check the **cleanliness and condition** of the dual-contact brake pedal switch and its connections.
Repair if necessary.

Disconnect the battery.
Disconnect the computer. Check the **cleanliness and condition** of the connections.
Use the "Universal bornier" to check the **insulation and continuity** on the following connection:
Computer, connector **A, track E4** ⟶ **track B3** of the brake pedal switch
If the fault is still present, check the condition of intermediate connector **R262** on **track C8**.
Repair if necessary.

If the fault is still present, replace the switch.

AFTER REPAIR	Follow the instructions to confirm repair. Deal with any other faults. Clear the stored faults.

GETtheMANUALS.org

DF128 PRESENT OR STORED	BRAKE SWITCH 2 CIRCUIT 1.DEF: fault on both brake pedal contacts

NOTES	**Priority when dealing with a number of faults:** Deal with fault **DF127 Brake switch 1 circuit** first if it is present or stored.
	Conditions for applying the fault finding procedure to stored faults: The fault is declared present: – with the engine running, – brake pedal depressed, – cruise control switch in the ON position and cruising speed.

Run a multiplex network test (see **88B, Multiplexing**).

If the fault is still present, carry out fault finding on the **UCH** system (see **87G, Connection unit**).

Check the **insulation, continuity and the absence of interference resistance** on the following connection:
Computer, connector **A, track A3** ⟶ **Track 1, white connector P101**, UCH
Computer, connector **A, track A4** ⟶ **Track 11, white connector P101**, UCH
Repair if necessary

AFTER REPAIR	Follow the instructions to confirm repair. Deal with any other faults. Clear the stored faults.

GETtheMANUALS.org

DF138 PRESENT OR STORED	CLUTCH PEDAL CIRCUIT 1.DEF: component in bad condition 2.DEF: non-compliance with emission control standards

NOTES	**Conditions for applying the fault finding procedure to stored faults:** The fault is present with the engine running and following a check on the number of times the clutch pedal is depressed in relation to the number of gear changes calculated by the computer.
	Special note: The acquisition is made if the vehicle is not fitted with an automatic transmission. In the event of a fault, before replacing any component, check using the diagnostic tool that the clutch contact is operational and that the recommended clutch pedal clearance is still valid.

Check the **cleanliness, condition and fitting** of the clutch pedal switch. Repair if necessary.
If the fault is still present, disconnect the switch. Check that when the clutch pedal is depressed, the switch is closed, and when the clutch pedal is released, the switch is open. Replace the switch if necessary.
If the fault is still present, manipulate the harness to see if the status changes. Look for any damage to the wiring harness, and check the **condition** and **connection** of the connectors of the injection computer and clutch pedal switch. Repair if necessary.
If the fault is still present, check the **earth** on **track 2** of the switch. If there is no **earth** on **track 2**, check the **insulation, continuity and the absence of interference resistance** on the following connection: Clutch pedal switch **track 1** ⟶ **earth** Repair if necessary.
If the fault is still present, check the **insulation, continuity and ensure the absence of interference resistance** on the following connections: Clutch pedal switch **track 2** ⟶ **track C4**, connector **A** of the computer If the fault is still present, check that intermediate connector **R262** on **track A4** is in good condition. Repair if necessary.
If the fault is still present, deal with the other faults then proceed to the conformity check.

AFTER REPAIR	Follow the instructions to confirm repair. Deal with any other faults. Clear the stored faults.

GETtheMANUALS.org

DF154 PRESENT OR STORED	FLYWHEEL SIGNAL SENSOR CIRCUIT 1.DEF: voltage outside tolerances 2.DEF: loss of a tooth 3.DEF: non-compliance with emission control standards

NOTES	**Priority when dealing with a number of faults:** In the event of a combination of faults **DF154, DF080 Camshaft dephaser circuit** and **DF119 Camshaft sensor signal**, ignore **DF080** and deal with the other 2 faults first. **Conditions for applying the fault finding procedure to stored faults:** The fault is declared present after the starter motor has been running for **10 seconds** or at an engine speed above **600 rpm**.
	Special note: – **OBD warning light** illuminated.

1.DEF	NOTES	None.

Check the **cleanliness, condition and the fitting** of the flywheel.
Repair if necessary.

If the flywheel has been replaced or removed, the flywheel target has to be reinitialised, then reprogrammed.

Programming reinitialisation:
Run command **RZ005 Programming**.
Carrying out the flywheel target programming:
Accelerate up to **4000 rpm** in 3rd gear then decelerate, foot off the pedal, to power take-up speed*.
Then repeat immediately.
After the operation, check that status **ET089 Flywheel target programming** is **COMPLETED**.
(*This is the moment when, during deceleration with no load, the engine drops to idle speed and recovers torque).

AFTER REPAIR	Follow the instructions to confirm repair. Deal with any other faults. Clear the stored faults.

GETtheMANUALS.org

DF154 CONTINUED	

2.DEF	NOTES	None.

Check **the mounting** and **positioning** of the engine speed sensor (see **MR 395, Mechanical, 10A, Engine and peripherals**).

Check **the cleanliness and condition** of the engine speed sensor.
Repair if necessary.

Disconnect the battery and the injection computer.
Check the **cleanliness and condition** of the connections.
Use the "Universal bornier" to check the **insulation and continuity** of the following connections:
For F4R Turbo engine only:
Computer, **connector B, track E4** → **track 2** of the engine speed sensor
Computer, **connector B, track F3** → **track 1** of the engine speed sensor
For K4M and F4R engines only.
Computer, **connector B, track E4** → **track B** of the engine speed sensor
Computer, **connector B, track F3** → **track A** of the engine speed sensor
Repair if necessary.

Measure the **resistance** of the engine speed sensor between **tracks 1**and **2 (K4M and F4R only)** and between **tracks 1** and **2 (F4R-Turbo only)**.
Replace the engine speed sensor if the **resistance** is not cut-off between **200 and 270 Ω at 23˚C**.

If the engine speed sensor has been replaced, the flywheel target programming has to be reinitialised, then reprogrammed.

Programming reinitialisation:
Run command **RZ005**.
Carrying out the flywheel target programming:
Accelerate up to **4000 rpm** in third gear then decelerate, foot off the pedal, to power take-up speed*.
Then repeat immediately.
After the operation, check that status **ET089 Flywheel target programming** is **COMPLETED**.
(*This is the moment when, during deceleration with no load, the engine drops to idle speed and recovers torque)

AFTER REPAIR	Follow the instructions to confirm repair. Deal with any other faults. Clear the stored faults.

GETtheMANUALS.org

DF167 PRESENT OR STORED	THERMOPLUNGER RELAY CIRCUIT CO.0: open circuit or short circuit to earth CC.1: short circuit to + 12 V

NOTES	**Special note:** For **F4R** and **F4R-Turbo** engines only.

Manipulate the wiring harness between the injection computer and the thermoplunger relay in order to produce a change in status (present ↔ stored).
Look for possible damage to the wiring harness, check the **condition** and the **connection** of the connectors of the injection computer and thermoplunger relay.
Repair if necessary.

Use the "Universal bornier" to check the **insulation and continuity** on the following connection:
Computer, **connector C, track E1** → **track 1** of the water heater interface unit
Repair if necessary.

If the fault is still present, check for **earth** on **track 3** of the water heater interface unit.

Check the **condition** of additional heater relay fuses **F18** and **F19 (70A)**.
Repair if necessary.

If the fault is still present, use the "Universal bornier" to check **the insulation and continuity** of the following connections:
Actuator relay **track 5** → **track 1** of the additional heater relay no.1
→ **track 1** of additional heater relay no. 2
→ **track 9** of the water heater interface unit
Repair if necessary.

If the fault is still present, use the "Universal bornier" to check **the insulation and continuity** of the connections between:
Additional heater relay no.1 **track 2** → **track 7** of the water heater interface unit
Additional heater relay no.2 **track 2** → **track 6** of the water heater interface unit
Repair if necessary.

If the fault is still present, contact the Techline.

AFTER REPAIR	Follow the instructions to confirm repair. Deal with any other faults. Clear the stored faults.

GETtheMANUALS.org

DF196 PRESENT OR STORED	PEDAL SENSOR CIRCUIT GANG 1 CO.0: open circuit or short circuit to earth CC.1: short circuit to +12 V 1.DEF: signal incoherence

NOTES	**Priority when dealing with a number of faults:** Deal with fault **DF011 Sensor supply voltage no. 1** first if it is present or stored.
	Conditions for applying the fault finding procedure to stored faults: The fault is declared present after the accelerator pedal goes from no load to full load.
	Special note: – **level 1 fault warning light** illuminated. – defect mode **type 4**: Loss of monitoring system → Limited throttle opening.

Check that the pedal mechanism has not seized.
Check the **cleanliness** and **condition** of the throttle valve connections. Check the **cleanliness** and **condition** of the pedal potentiometer connections. Disconnect the battery and the injection computer. Check the **cleanliness** and **condition** of the connections. Repair if necessary.
Use the "Universal bornier" to check the **insulation** and **continuity** of the following connections: Computer, connector **A, track H3** ⟶ **track 2** pedal potentiometer gang 1 Computer, connector **A, track G2** ⟶ **track 4** pedal potentiometer gang 1 Computer, connector **A, track H2** ⟶ **track 3** pedal potentiometer gang 1 If the fault is still present, check the condition of intermediate connector **R262** on **track C9, C8 and C7**. Repair if necessary.
Measure the **resistance** of pedal sensor no.1 between **tracks 4** and **2**. Replace the accelerator potentiometer if the **resistance** is not **1200 Ω ± 480 Ω**. If necessary replace the sensor.
If the fault is still present, contact the Techline.

AFTER REPAIR	Follow the instructions to confirm repair. Deal with any other faults. Clear the stored faults.

GETtheMANUALS.org

DF198 PRESENT OR STORED	PEDAL SENSOR CIRCUIT GANG 2 CO.0: open circuit or short circuit to earth CC.1: short circuit to +12 V

NOTES	**Priority when dealing with a number of faults:** Deal with fault **DF012 Sensor feed no. 2 voltage** first, if it is present or stored.
	Conditions for applying the fault finding procedure to stored faults: The fault is declared present after the accelerator pedal changes from no load to full load.
	Special note: – **level 1 fault warning light** illuminated. – defect mode **type 4**: Loss of monitoring system → Limited throttle opening.

Check that the pedal mechanism has not seized.
Check the **cleanliness** and **condition** of the throttle valve connections. Check the **cleanliness** and **condition** of the pedal potentiometer connections. Disconnect the battery and the injection computer. Check the **cleanliness** and **condition** of the connections. Repair if necessary.
Use the "Universal bornier" to check the **insulation** and **continuity** of the following connections: Computer, connector **A, track F4** ⟶ **track 1** of the pedal potentiometer gang 2 Computer, connector **A, track F2** ⟶ **track 5** of the pedal potentiometer gang 2 Computer, connector **A, track F3** ⟶ **track 6** of the pedal potentiometer gang 2 If the fault is still present, check the condition of intermediate connector **R262** on **track C6, C5 and C4**. Repair if necessary.
Measure the **resistance** of pedal sensor no.2 between **tracks 6** and **1**. Replace the accelerator potentiometer if the **resistance** is not **1700 Ω ± 680 Ω**. If necessary replace the sensor.
If the fault is still present, contact the Techline.

AFTER REPAIR	Follow the instructions to confirm repair. Deal with any other faults. Clear the stored faults.

GETtheMANUALS.org

DF228 PRESENT OR STORED	BRAKE SIGNALS 1.DEF: open circuit or short circuit 2.DEF: non-compliance with emission control standards

NOTES	**Conditions for applying the fault finding procedure to stored faults:** The fault is present when the ignition is switched on.
	Special note: – cruise control and speed limiter deactivated.

Run a multiplex network test (see **88B, Multiplexing**).
If the fault is still present, carry out fault finding on the **ABS - ESP system** (see **38C, Anti-lock braking system**).

AFTER REPAIR	Follow the instructions to confirm repair. Deal with any other faults. Clear the stored faults.

GETtheMANUALS.org

DF330 PRESENT OR STORED	PINKING SENSOR CIRCUIT 1.DEF: pinking signal fault

NOTES	**Conditions for applying the fault finding procedure to stored faults:** The fault is declared present during a road test with a warm engine at an engine speed above **1500 rpm**.

Check the **cleanliness and condition** of the pinking sensor and its connections.
Check the **tightness** of the pinking sensor.

Disconnect the battery and the injection computer.
Check the **cleanliness and condition** of the connections.
Use the "Universal bornier" to check the **insulation and continuity** of the following connections:

- Computer, connector **B, track B3** → **track 2** of the pinking sensor
- Computer, connector **B, track B4** → **track 1** of the pinking sensor
- Computer, connector **B, track B2** → **Screening** of the pinking sensor

Repair if necessary.

Check **the conformity** of the fuel in the tank.
Check the **conformity** of the spark plugs.

If the fault is still present, deal with the other faults then proceed with the conformity check.

AFTER REPAIR	Follow the instructions to confirm repair. Deal with any other faults. Clear the stored faults.

GETtheMANUALS.org

DF369 PRESENT OR STORED	INJECTION/ELECTRIC WINDSCREEN CONNECTION 1.DEF: CAN connection fault

NOTES	None.

Run a multiplex network test (see **88B, Multiplexing**).

If the fault is still present, perform fault finding on the **UCH** system.
(see **87G, Connection unit**).

Check the **insulation, continuity and the absence of interference resistance** on the following connection:

Computer, connector **A, track A3** ⟶ **Track 1, white connector**, UCH
Computer, connector **A, track A4** ⟶ **Track 11, white connector**, UCH

Repair if necessary.

AFTER REPAIR	Follow the instructions to confirm repair. Deal with any other faults. Clear the stored faults.

GETtheMANUALS.org

DF394 PRESENT OR STORED	CATALYTIC CONVERTER OPERATING FAULT 1.DEF: EOBD HC pollutant emissions threshold has been exceeded

NOTES	**Priority when dealing with a number of faults:** Deal with the other faults first. There must be no other injection system faults, either present or stored. – combustion misfire: **DF059, DF060, DF061, DF062** with **1.DEF** or **2.DEF**.
	Conditions for applying the fault finding procedure to stored faults: The fault is considered present under the following conditions: – there must be no further electrical faults, – programming done, – warm engine (minimum **75˚C**), – engine idling with all electrical consumers switched on for approximately **15 minutes**.
	Special note: – **OBD warning light** illuminated.

Replace the catalytic converter after dealing with the causes of the misfire.
If there is no present or stored misfiring fault, the misfiring was caused by the low fuel level. Clear fault **DF109** by running command **RZ007 Fault memory**.
If the fault is still present, perform fault finding on the catalytic converter using the CLIP tool by running command **SC006 Run catalytic converter OBD test**.

AFTER REPAIR	Follow the instructions to confirm repair. Deal with any other faults. Clear the stored faults.

GETtheMANUALS.org

DF398 PRESENT OR STORED	FUEL CIRCUIT OPERATING FAULT 1.DEF: operational fault finding on the fuel circuit must detect a malfunction of the petrol fuel system causing the EOBD pollutant emission thresholds to be exceeded. The on-board diagnostic can detect: – clogging of the injectors or an injector flow fault, – a fault in the supply system (pressure regulator, fuel pump, filter, etc.), – a poor connection in the petrol or injection circuits. 2.DEF: non-compliance with emission control standards

NOTES	**Priority when dealing with a number of faults:** If faults **DF085 Fuel pump relay control circuit, DF081 Canister bleed solenoid valve circuit** and injector faults (**DF026, DF027, DF028** and **DF029**) are present or stored, deal with them first.
	Conditions for applying the fault finding procedure to stored faults: The fault is declared present after the ignition has been switched on.
	Special note: – **OBD warning light** illuminated.

Check **the cleanliness, condition and fitting** of the fuel vapour absorber.
Check the **connections and correct operation** of the petrol pump.
Check the **cleanliness, condition and fitting** of the injectors and their sealing.
Repair if necessary.

Check:
– that the fuel is present and correct,
– the tank vent,
– that there are no leaks on the petrol circuit (from the tank to the injectors),
– that there are no kinked hoses (especially after dismantling),
– the fuel flow rate and pressure.
Repair the faulty component(s) if necessary (see **MR 395, Mechanical, 13A, Fuel supply**).

If the fault is still present, deal with the other faults then proceed to the conformity check.

AFTER REPAIR	Follow the instructions to confirm repair. Deal with any other faults. Clear the stored faults.

GETtheMANUALS.org

DF436 PRESENT OR STORED	DETECTION OF ENGINE MISFIRING 1.DEF: destructive misfiring 2.DEF: pollutant misfiring

NOTES	**Priority when dealing with a number of faults:** – ignition: **DF460, DF461, DF462** and **DF463**, – fuel supply circuit: **DF026, DF027, DF028, DF029** and **DF085**, – flywheel signal: **DF154** and **DF457**, – cylinder misfiring: **DF059, DF060, DF061** and **DF062**.
	Conditions for applying the fault finding procedure to stored faults: The fault is considered present under the following conditions: – there must be no further electrical faults, – programming must be carried out, – warm engine (minimum 75°C), – engine idling with all electrical consumers switched on for approximately 15 minutes.
	Special note: – catalytic converter misfire: **OBD warning light** flashes when the fault is present then is continuously lit, – pollutant combustion misfire: **OBD warning light** lit continuously.

Check the injectors.
Check the condition and conformity of the spark plugs.
Check the ignition pencil coils.
check that the correct fuel is being used,

If the fault is still present, carry out the following checks:
– check the flywheel sensor,
– check the condition and cleanliness of the flywheel,
– check the flywheel sensor mounting,
– check the sensor/flywheel air gap,
– check the cylinder compressions,
– check the entire petrol supply system (see **MR 395, Mechanical, 13A, Fuel supply**),
– check the entire ignition system (see **MR 395, Mechanical, 17A, Ignition**),
– check the hydraulic tappets if there is camshaft noise (see **MR 395, Mechanical, 11A, Top and front of engine**).

– **If the fault is still present, deal with the other faults then proceed with the conformity check.**

AFTER REPAIR	Follow the instructions to confirm repair. Deal with any other faults. Clear the stored faults.

GETtheMANUALS.org

DF455 PRESENT OR STORED	LOW FUEL LEVEL SIGNAL 1.DEF: open circuit or short circuit

NOTES	None.

Run a multiplex network test (see **88B, Multiplexing**).
If the fault is still present, carry out fault finding on the **Instrument panel** system (see **83A, Instrument panel**).

AFTER REPAIR	Follow the instructions to confirm repair. Deal with any other faults. Clear the stored faults.

GETtheMANUALS.org

DF457 PRESENT OR STORED	FLYWHEEL TARGET 1.DEF: flywheel target fault: – Missing tooth – Tooth length outside tolerances – Eccentricity on the target – Air gap outside tolerances 2.DEF: non-compliance with emission control standards

NOTES	**Conditions for applying the fault finding procedure to stored faults:** The fault is declared present after decelerating for a few seconds from **3500** to **3000 rpm** then from **2500** to **2500 rpm** in a gear above **2nd**.
	Special note: – **OBD warning light** illuminated.

Check the **cleanliness** and **condition** of the engine flywheel.
Repair or replace the engine flywheel if necessary.

If the flywheel has been replaced or removed, the flywheel target programming has to be reinitialised, and then programmed.

Reinitialise programming:
Run command **RZ005 Programming**
Carrying out the flywheel target programming:
Accelerate up to **4000 rpm** in 3rd gear then decelerate to power take-up speed*. Then repeat immediately.
Check the programming with **ET089 Programming flywheel target**.
(* This is the moment when, during deceleration with no load, the engine drops to idling speed and recovers torque).

If the fault is still present, contact the Techline.

AFTER REPAIR	Follow the instructions to confirm repair. Deal with any other faults. Clear the stored faults.

GETtheMANUALS.org

DF460 PRESENT OR STORED	CYLINDER 1 COIL CONTROL CO.0: open circuit or short circuit to earth CC.1: short circuit to + 12 V 1.DEF: non-compliance with emission control standards

NOTES	**Priority when dealing with a number of faults:** Deal with faults **DF046 Battery voltage, DF084 Actuator relay control circuit** or **DF085 Fuel pump relay control circuit** first if they are present or stored. If fault **DF463 Cylinder 4 coil control** is also present or stored, deal with it first.
	Conditions for applying the fault finding procedure to stored faults: The fault is declared present after the starter has been in operation for **10 seconds** or after the engine has been running for **10 seconds**.
	Special note: – **OBD warning light** illuminated.

Disconnect the cylinder 1 pencil coil connector.
Check the **cleanliness and condition** of the pencil coil and its connections.
check that the correct fuel is being used,

Measure the **primary and secondary** resistance of the cylinder 1 pencil coil.
Replace the cylinder 1 pencil coil if the **primary resistance** is not:
K4M engine only:
- **0.54 Ω ± 0.1 Ω** for the primary resistance
- **10.7 kΩ ± 1.6 kΩ** for the secondary resistance

For F4R and F4R Turbo engines only.
- **0.52 Ω ± 0.1 Ω** for the primary resistance
- **6.7 kΩ ± 0.7 kΩ** for the secondary resistance

Disconnect the battery and the injection computer.
Check the **cleanliness and condition** of the connections.
Use the "Universal bornier" to check the **insulation and continuity** of the following connections:
Computer, connector **C, track M4** → **track 2** of coil 1
Coil 1 **track 1** → **track 2** of coil 4
Repair if necessary.

Use the "Universal bornier" to check the **insulation and continuity** of the following connections:
Fuse holder unit **track 31** → **track 1** of coil 4
Petrol pump relay **track 5** →
Repair if necessary.

If the fault is still present, replace the defective pencil coil.

If the fault is still present, deal with the other faults then proceed to the conformity check.

AFTER REPAIR	Follow the instructions to confirm repair. Deal with any other faults. Clear the stored faults.

GETtheMANUALS.org

DF461 PRESENT OR STORED	CYLINDER 2 COIL CONTROL CO.0: open circuit or short circuit to earth CC.1: short circuit to + 12 V 1.DEF: non-compliance with emission control standards

NOTES	**Priority when dealing with a number of faults:** Deal with faults **DF046 Battery voltage, DF084 Actuator relay control circuit** or **DF085 Fuel pump relay control circuit** first if they are present or stored. If fault **DF462 Cylinder 3 coil control** is also present or stored, deal with it first.
	Conditions for applying the fault finding procedure to stored faults: The fault is declared present after the starter has been in operation for **10 seconds** or after the engine has been running for **10 seconds**.
	Special note: – **OBD warning light** illuminated.

Disconnect the cylinder 2 pencil coil connector.
Check the **cleanliness and condition** of the pencil coil and its connections. check that the correct fuel is being used.

Measure the **primary and secondary** resistance of the cylinder 1 pencil coil.
Replace the cylinder 1 pencil coil if the **primary resistance** is not:
K4M engine only:
- **0.54 Ω ± 0.1 Ω** for the primary resistance
- **10.7 kΩ ± 1.6 kΩ** for the secondary resistance

For F4R and F4R Turbo engines only.
- **0.52 Ω ± 0.1 Ω** for the primary resistance
- **6.7 kΩ ± 0.7 kΩ** for the secondary resistance

Disconnect the battery and the injection computer.
Check the **cleanliness and condition** of the connections.
Use the "Universal bornier" to check the **insulation and continuity** of the following connections:
Computer, connector **C, track M3** → **track 2** of coil 2
Coil 2 **track 1** → **track 2** of coil 3
Repair if necessary.

Use the "Universal bornier" to check the **insulation and continuity** of the following connections:
Fuse holder unit **track 31** → **track 1** of coil 3
Petrol pump relay **track 5**
Repair if necessary.

If the fault is still present, replace the defective pencil coil.

If the fault is still present, deal with the other faults then proceed to the conformity check.

AFTER REPAIR	Follow the instructions to confirm repair. Deal with any other faults. Clear the stored faults.

GETtheMANUALS.org

DF462 PRESENT OR STORED	CYLINDER 3 COIL CONTROL CO.0: open circuit or short circuit to earth CC.1: short circuit to + 12 V 1.DEF: non-compliance with emission control standards

NOTES	**Priority when dealing with a number of faults:** Deal with faults **DF046 Battery voltage, DF084 Actuator relay control circuit** or **DF085 Fuel pump relay control circuit** first if they are present or stored.
	Conditions for applying the fault finding procedure to stored faults: The fault is declared present after the starter has been in operation for **10 seconds** or after the engine has been running for **10 seconds**.
	Special note: – **OBD warning light** illuminated.

Check that fuse **F8 (10A)** is in **good condition and working properly**.
Repair if necessary.

Disconnect the connector from the cylinder 3 pencil coil.
Check the **cleanliness and condition** of the pencil coil and its connections. check that the correct fuel is being used,

Measure the **primary and secondary** resistance of the cylinder 1 pencil coil.
Replace the cylinder 1 pencil coil if the **primary resistance** is not:
K4M engine only:
- **0.54 Ω ± 0.1 Ω** for the primary resistance
- **10.7 kΩ ± 1.6 kΩ** for the secondary resistance

For F4R and F4R Turbo engines only.
- **0.52 Ω ± 0.1 Ω** for the primary resistance
- **6.7 kΩ ± 0.7 kΩ** for the secondary resistance

Disconnect the battery and the injection computer.
Check the **cleanliness and condition** of the connections.
Use the "Universal bornier" to check the **insulation and continuity** of the following connections:
Computer, connector **C, track M3** → **track 2** of coil 2
Coil 3 **Track 2** → **track 1** of coil 2
Repair if necessary.

Use the "Universal bornier" to check the **insulation and continuity** of the following connections:
Fuse holder unit **track 31** → **track 1** of coil 3
Petrol pump relay **track 5**
Repair if necessary.

If the fault is still present, replace the defective pencil coil.

If the fault is still present, deal with the other faults then proceed to the conformity check.

AFTER REPAIR	Follow the instructions to confirm repair. Deal with any other faults. Clear the stored faults.

GETtheMANUALS.org

DF463 PRESENT OR STORED	CYLINDER 4 COIL CONTROL CO.0: open circuit or short circuit to earth CC.1: short circuit to + 12 V 1.DEF: non-compliance with emission control standards

NOTES	**Priority when dealing with a number of faults:** Deal with faults **DF046 Battery voltage, DF084 Actuator relay control circuit** or **DF085 Fuel pump relay control circuit** first if they are present or stored.
	Conditions for applying the fault finding procedure to stored faults: The fault is declared present after the starter has been in operation for **10 seconds** or after the engine has been running for **10 seconds**.
	Special note: – **OBD warning light** illuminated.

Check that fuse **F8 (10A)** is in **good condition and working properly**.
Repair if necessary.

Disconnect the rod coil connector on cylinder 4.
Check the **cleanliness and condition** of the pencil coil and its connections. Check that the **correct** fuel is being used.

Measure the **primary and secondary** resistance of the cylinder 1 pencil coil.
Replace the cylinder 1 pencil coil if the **primary resistance** is not:
K4M engine only:
- **0.54 Ω ± 0.1 Ω** for the primary resistance
- **10.7 kΩ ± 1.6 kΩ** for the secondary resistance

For F4R and F4R Turbo engines only.
- **0.52 Ω ± 0.1 Ω** for the primary resistance
- **6.7 kΩ ± 0.7 kΩ** for the secondary resistance

Disconnect the battery and the injection computer.
Check the **cleanliness and condition** of the connections.
Use the "Universal bornier" to check the **insulation and continuity** of the following connections:
Computer, connector **C, track M4** → **track 2** of coil 1
Coil 4 **Track 2** → **track 1** of coil 1
Repair if necessary.

Use the "Universal bornier" to check the **insulation and continuity** of the following connections:
Fuse holder unit **track 31** → **track 1** of coil 4
Petrol pump relay **track 5**
Repair if necessary.

If the fault is still present, replace the defective pencil coil.

If the fault is still present, deal with the other faults then proceed to the conformity check.

AFTER REPAIR	Follow the instructions to confirm repair. Deal with any other faults. Clear the stored faults.

GETtheMANUALS.org

DF508 PRESENT OR STORED	MOTORISED THROTTLE VALVE CONTROL CC.1: short circuit to + 12 V 1.DEF: Motorised throttle general control fault

WARNING
Never drive the vehicle without having confirmed that no faults involving the throttle valve are present.

NOTES	**Priority when dealing with a number of faults:** If faults **DF095 Throttle potentiometer circuit gang 1** or **DF096 Throttle potentiometer circuit gang 2** are present, deal with these first.
	Conditions for applying the fault finding procedure to stored faults: The fault is considered present if: – the engine speed varies, – the engine air temperature should be between **5˚C** and **105˚C**.
	Special note: – **level 1 fault warning light** illuminated. – defect mode **types 1 and 2** for the throttle valve.

Check the **cleanliness and condition** of the throttle valve and its connections.

Manually check that the throttle **rotates properly**.

Disconnect the battery and the injection computer.
Check the **cleanliness and condition** of the connections.
Use the "Universal bornier" to check the **insulation and continuity** of the following connections:
Computer,connector **B, track M3** ⟶ **track 4** of the motorised throttle
Computer,connector **B, track M4** ⟶ **track 3** of the motorised throttle
Repair if necessary.

If the fault is still present, measure the **resistance** of the throttle motor between tracks **M3** and **M4**.
Replace the throttle valve if the **resistance** is not **1.57 Ω at 23˚C (only for F4R and F4R-Turbo)** and **2.2 Ω at 23˚C (only for K4M)**.

If the fault is still present, deal with the other faults then proceed with the conformity check.

AFTER REPAIR	Follow the instructions to confirm repair. Deal with any other faults. Clear the stored faults.

GETtheMANUALS.org

DF573 PRESENT OR STORED	INJECTION/AIR CONDITIONING CONNECTIONS 1.DEF: CAN connection fault

NOTES	**Conditions for applying the fault finding procedure to stored faults:** The fault is declared present after the air conditioning is connected.
	Special notes: Status **ET079 Air conditioning present** may help when dealing with this fault.

Run a multiplex network test (see **88B, Multiplexing**).
If the fault is still present, perform fault finding on the **Air conditioning** system (see **62A, Air conditioning**).

AFTER REPAIR	Follow the instructions to confirm repair. Deal with any other faults. Clear the stored faults.

GETtheMANUALS.org

DF586 PRESENT OR STORED	INSTRUMENT PANEL MULTIPLEX CONNECTION 1.DEF: CAN connection fault

NOTES	None.

Run a multiplex network test (see **88B, Multiplexing**).
If the fault is still present, carry out fault finding on the **Instrument panel** system (see **83A, Instrument panel**).

AFTER REPAIR	Follow the instructions to confirm repair. Deal with any other faults. Clear the stored faults.

GETtheMANUALS.org

DF612 PRESENT OR STORED	OIL VAPOUR DEFREEZE RESISTOR CIRCUIT CO.0: open circuit or short circuit to earth CC.1: short circuit to + 12 V

NOTES	**Priority when dealing with a number of faults:** If faults **DF002 Air temperature sensor circuit, DF004 Turbocharging pressure sensor circuit, DF196 Pedal sensor circuit gang 2** or **DF046 Battery voltage** are present, deal with them first.
	Conditions for applying the fault finding procedure to stored faults: The fault is declared present after the ignition has been switched on.

Check the cleanliness and condition of the oil vapour defreeze resistor connections.
Clean or replace as necessary.

Measure the electrical **resistance** of the defreeze resistor relay between **tracks 1 and 2**.
Replace the relay if the resistance is not approximately: **21 Ω at - 40˚C**
9.5 Ω at 20˚C
13.4 Ω at 120˚C

With the ignition on, check for **+ 12 V** on **track 1** of the defreeze resistor relay.
Use the "universal bornier" to check the **insulation and continuity** on the following connections:
Injection computer,connector **B, track M2** → **track 1** of the oil vapour defreeze resistor
Main relay **track 5** →
Repair if necessary.

Disconnect the battery.
Disconnect the computer. Check the cleanliness and condition of the connections.
Use the "universal bornier" to check the **insulation, continuity and the absence of interference resistance** on the following connections:
Computer,connector **B, track L2** → **track 2** of the oil vapour defreeze resistor
Repair if necessary.

If the fault is still present, deal with the other faults then proceed to the conformity check.

AFTER REPAIR	Follow the instructions to confirm repair. Deal with any other faults. Clear the stored faults.

GETtheMANUALS.org

DF617 PRESENT OR STORED	VACUUM PUMP RELAY CIRCUIT 1.DEF: component in bad condition

NOTES	**Special Note** Only for **F4R-Turbo** engines with an **automatic transmission**.

Manipulate the wiring harness between the injection computer and the vacuum pump relay in order to produce a change in status (present ↔ stored).
Look for possible damage to the wiring harness, and check the **connections and condition** of the vacuum pump relay and its connections.
Repair if necessary.

Check for **+ 12 V**on **track 1**of the vacuum pump relay.
If there is not **+ 12 V**, check (using the universal bornier) **the insulation, continuity and the absence of interference resistance** on the following connections:
Computer, connector **B, track M2** ⟶ **Track 1** of the vacuum pump relay
Repair if necessary.

Use the "universal bornier" to check the **insulation, continuity and the absence of interference resistance** on the following connections:
Computer, connector **B, track L3** ⟶ **Track 2** of the vacuum pump relay
Repair if necessary.

Check the condition of the vacuum pump relay fuse **F3 (30A)**.
Repair if necessary.

If the fault is still present, use the "universal bornier" to check **the insulation and continuity** of the following connection:
Fuse holder unit **track 24** ⟶ **track 3** of the vacuum pump relay
Repair if necessary.

AFTER REPAIR	Follow the instructions to confirm repair. Deal with any other faults. Clear the stored faults.

GETtheMANUALS.org

DF618 PRESENT OR STORED	VACUUM PUMP/PRESSURE SWITCH SYSTEM CO.0: open circuit or short circuit to earth CC.1: short circuit to + 12 V

NOTES	**Conditions for applying the fault finding procedure to stored faults:** The fault is declared present after negative pressure has been detected in the brake servo.
	Special Note Only for **F4R-Turbo** engines with an **automatic transmission**.

Manipulate the wiring harness between the injection computer and the mastervac pressure sensor in order to produce a change in fault status (Present ↔ Stored).
Look for possible damage to the wiring harness, and check the **condition and connection** of the mastervac pressure sensor and its connections.
Repair if necessary.

Use the "universal bornier" to check the **insulation, continuity and the absence of interference resistance** on the following connections:
Computer, connector **C, track G4** → **Track 1** of the mastervac pressure sensor
Repair if necessary.

Use the "Universal bornier" to check the **insulation and continuity** of the following connections:
Main relay **track 5** → **Track 1** of the mastervac pressure sensor
Computer, connector **B, Track M2** →
Repair if necessary.

Use the "Universal bornier" to check the **insulation and continuity** of the following connections:
Vacuum pump relay **track 5** → **Track 1** of the vacuum pump
Vacuum pump **track 2** → **Earth**
Repair if necessary.

If the fault is still present, contact the techline.

AFTER REPAIR	Follow the instructions to confirm repair. Deal with any other faults. Clear the stored faults.

GETtheMANUALS.org

NOTES	Only carry out this conformity check after a **complete check** using the diagnostic tool. The values shown in this conformity check are given as a guide. **Application conditions:** Engine **warm at idle speed**.

MAIN COMPUTER STATUSES AND PARAMETERS

Order	Function	Parameter or Status Check or Action		Display and notes	Fault finding
1	Battery voltage	**ET001:**	Computer + after ignition feed	**Presence of + After ignition feed**	In the event of a fault, apply the interpretation of **DF046 Battery voltage**.
2		**PR074:**	Battery voltage	**11 V < PR074 < 15 V**	
3	**Vehicle speed**	**PR155:**	vehicle speed	**Gives the vehicle speed in mph (km/h). This parameter is sent to the injection by the ABS computer via the multiplex network.**	In the event of a fault, apply the interpretation of fault **DF091 Vehicle speed signal**.
4	Faults	**ET074:**	OBD warning light illuminated by ATX	**YES** **NO**	**NONE**
5		**ET064:**	Level 1 injection fault	**ON** **OFF**	
6		**ET065:**	Level 2 Injection fault	**ON** **OFF**	
7		**PR106:**	Mileometer fault warning light lit	**Shows the distance covered with the warning light lit.**	
8		**PR105:**	Mileage counter OBD fault warning light on	**Indicates the mileage covered with the OBD warning light lit.**	

GETtheMANUALS.org

NOTES	Only carry out this conformity check after a **complete check** using the diagnostic tool. The values shown in this conformity check are given as a guide. **Application conditions:** Engine **warm at idle speed**.

AIR CIRCULATION SUB-FUNCTION (TURBOCHARGING/INLET):

Order	Function	Parameter or Status Checked or Action	Display and notes	Fault finding
1	**Air circuit pressure**	**PR035:** Atmospheric pressure	**200 mb < PR035 < 1047 mb**	If the event of an inconsistency, with the engine stopped and ignition on, check **PR035 = PR421 = Local atmospheric pressure**. **Only for F4R-T PR035 = PR421 = PR041.** In the event of a fault apply the interpretation of **PR421 Manifold pressure**
2		**PR421:** Manifold pressure	**200 mb < PR421 < 2500 mb**	
3		**PR041:** Turbocharging pressure	**200 mb < PR041 < 2500 mb default value = 103 mb**	
3	**Air temperature**	**PR058:** Air temperature	**- 40˚C < PR058 < 120˚C**	In the event of a fault, apply the interpretation of **DF002 Air temperature sensor circuit**.
4	**Coolant temperature**	**PR064:** Coolant temperature	**- 40˚C < PR064 < 120˚C**	In the event of a fault, apply the interpretation of **DF001 Coolant temperature sensor circuit**.
5	**Air flow**	**PR018:** estimated air flow	**Indicates the air flow value estimated by the motorised throttle valve.**	In the event of a fault, apply the interpretation of faults **DF095 Throttle potentiometer circuit gang 1** and **DF096 Throttle potentiometer circuit gang 2**.

GETtheMANUALS.org

NOTES	Only carry out this conformity check after a **complete check** using the diagnostic tool. The values shown in this conformity check are given as a guide. **Application conditions: Engine stopped, + after ignition**.

AIR CIRCULATION SUB-FUNCTION (TURBO / INTAKE) (CONTINUED):

Order	Function	Parameter or Status Checked or Action		Display and notes	Fault finding
6	**Camshaft dephaser**	**ET083:**	Camshaft dephaser in defect mode	**STATUS 1:** This defect mode covers all faults that affect the dephaser position measurement. The dephaser is set to the lower stop and the camshaft angle measurement is forced to 0. Tooth signal fault. **STATUS 2:** This defect mode covers all faults that affect the dephaser (pulley and solenoid valve). The dephaser is set to the low stop. **NO**	If **STATUS 1**, run fault finding on the camshaft signal/tooth consistency. If **STATUS 2**, carry out fault finding on the camshaft dephaser position.
7		**ET084:**	camshaft dephaser	**STATUS 1:** No camshaft dephaser (on F4R-T) **STATUS 2:** On/off camshaft dephaser (on F4R) **STATUS 3:** Continuous camshaft dephaser (on K4M)	**NONE**
8		**ET086:**	Camshaft dephaser control	**For K4M and F4R engines only.** Indicates whether or not the camshaft dephaser is functioning.	For continuous camshaft dephaser only: **check that PR093 = PR745**.
9		**PR093:**	Camshaft dephaser measured position	Indicates dephasing value measured. **On K4M only**	**NONE**
10		**PR745:**	Camshaft dephaser position setpoint	Indicates the required camshaft dephasing value. **On K4M only**	**NONE**
11		**PR876:**	Camshaft dephaser solenoid control OCR	Indicates the opening percentage of the solenoid valve required for the camshaft dephasing	**NONE**

GETtheMANUALS.org

NOTES	Only carry out this conformity check after a **complete check** using the diagnostic tool. The values shown in this conformity check are given as a guide. **Application conditions:** Engine **warm at idle speed**.

FUEL CIRCUIT SUB-FUNCTION:

Order	Function	Parameter or Status Checked or Action	Display and notes	Fault finding
1	**Engine speed**	**PR145 :** Engine speed	**Indicates the engine's speed of rotation in rpm.** **PR145 = 0 rpm**	In the event of a fault, apply the interpretation for **DF154 Flywheel signal sensor circuit**.
2	**Motorised throttle**	**PR014 :** Idling speed correction	**Shows engine idling speed correction value.** **PR014 = 0 rpm.** **The idling speed regulator performs all the calculations required for physical control of the idling actuator: the motorised throttle. The functional component of the regulator is adaptive (variation programming and ageing).**	**NONE**
3		**PR536 :** Idling regulation valve setpoint	**The idling regulation valve setpoint depends on oil and coolant temperature, the position of the gearbox selector, and which electrical consumers are running.** **752 rpm < PR536 < 1216 rpm.** **If a manifold pressure sensor fault is present or stored, the idle speed setpoint is 896 rpm.**	In the event of a fault, apply the interpretation of **ET054 Idle speed regulation**.
4		**ET054:** Idle speed regulation	**INACTIVE**	If **ACTIVE**, apply the interpretation of **ET054 Idle speed regulation**.

GETtheMANUALS.org

NOTES	Only carry out this conformity check after a **complete check** using the diagnostic tool. The values shown in this conformity check are given as a guide. **Application conditions:** Engine **warm at idle speed**.

FUEL CIRCUIT SUB-FUNCTION: (continued 1)

Order	Function	Parameter or Status Checked or Action		Display and notes	Fault finding
5	**Motorised throttle**	**PR090:**	Idle speed regulation programming value	**- 12% < PR090 < 12%** **PR090, an adaptive built-in action, is a stored parameter designed to program variation and engine ageing for the idle speed regulator. These are programmed only when the engine is idling and warm, and no electrical consumers (electrical windscreen, air conditioning, GMV, power steering) have been selected. Therefore it adjusts slowly.**	**NONE**
6		**PR444:**	Idling speed regulation built-in correction.	**0%** **The built-in correction is continuously calculated to take into account consumer air demand.**	
7	**Motorised throttle**	**PR091:**	Theoretical idle speed regulation OCR	**0% < PR091 < 60%** **When the conditions for regulation are met, the idle regulator continually repositions the motorised throttle to keep the engine speed at the idling speed setting. The motorised throttle opening ratio required to adhere to the engine speed setpoint is then given by parameter PR091.**	

GETtheMANUALS.org

NOTES	Only carry out this conformity check after a **complete check** using the diagnostic tool. The values shown in this conformity check are given as a guide. **Application conditions:** Engine **warm at idle speed**.

FUEL CIRCUIT SUB-FUNCTION: (continued 2)

Order	Function	Parameter or Status Checked or Action		Display and notes	Fault finding
8	Oxygen sensor	**ET055:**	Upstream sensor richness loop.	**Loop open** **Loop closed**	If **closed loop**, apply the interpretation of **ET055 Upstream sensor richness loop**.
		ET056:	Richness double loop	**ACTIVE** **INACTIVE**	In the event of a fault, apply the interpretation of **ET056 Double richness loop**.
9		**PR138:**	Richness correction	**50%** **In looping, the richness correction corrects the injection duration to obtain a fuel mixture as close as possible to a richness of 1. The correction value varies around 50, between 0 and 100.**	**NONE**
10		**PR144:**	Self-adapting richness offset	**0 < PR144 < 255** **This parameter is used to detect any tendency of the injection system to increase or decrease the richness.**	
11		**PR143:**	Self-adapting richness gain	**0 < PR143 < 255** **This parameter is used to detect any tendency of the injection system to increase or decrease the richness.**	

GETtheMANUALS.org

NOTES	Only carry out this conformity check after a **complete check** using the diagnostic tool. The values shown in this conformity check are given as a guide. **Application conditions:** Engine **warm at idle speed**.

FUEL CIRCUIT SUB-FUNCTION: (continued 3)

Order	Function	Parameter or Status Checked or Action		Display and notes	Fault finding
12	**Injection**	**PR101:**	Duration of injection	**0 ms**	**NONE**
13	**Fuel consumption**	**PR103:**	Instantaneous fuel consumption	**PR103 = 0 l/h**	
14	**Fuel pump**	**ET047:**	Fuel pump control circuit	**INACTIVE**	If **ACTIVE**, apply the interpretation of **DF085 Fuel pump relay control circuit**.
15		**AC015:**	Fuel pump relay	**The fuel pump should be heard operating**	In the event of a fault, apply the interpretation of **AC015 Fuel pump relay**.

GETtheMANUALS.org

NOTES	Only carry out this conformity check after a **complete check** using the diagnostic tool. The values shown in this conformity check are given as a guide. **Application conditions:** Engine **warm at idle speed**.

DRIVER PARAMETERS SUB FUNCTION:

Order	Function	Parameter or Status Check or Action		Display and notes	Fault finding
1	Motorised throttle	**ET051:**	Throttle stop programming	**COMPLETED**	**Run command RZ005 Programming. If the parameters or statuses are still not correct, contact the Techline.**
2		**ET082:**	Motorised throttle position	**CLOSED**	
3		**PR096:**	Motorised throttle upper stop programmed value	**80% < PR096 < 100%**	
4		**PR097:**	Motorised throttle lower stop programmed value.	**5.96% < PR097 < 13.96%**	
5		**ET564:**	Type 1 defect mode	**NO**	In the event of a fault, apply the interpretation of status **ET564 Type 1 defect mode**.
6		**ET565:**	Type 2 defect mode	**NO**	In the event of a fault, apply the interpretation for status **ET565 Type 2 defect mode**.
7		**ET566:**	Type 3 defect mode	**NO**	In the event of a fault, apply the interpretation of status **ET566 Type 3 defect mode**.
8		**ET567:**	Type 4 defect mode	**NO**	In the event of a fault, apply the interpretation of status **ET567 Type 4 defect mode**.
9		**ET568:**	Type 5 defect mode	**NO**	In the event of a fault, apply the interpretation of status **ET568 Type 5 defect mode**.
10		**ET569:**	Defect mode type 6	**NO**	In the event of a fault, apply the interpretation of status **ET569 Type 6 defect mode**.

GETtheMANUALS.org

NOTES	Only carry out this conformity check after a **complete check** using the diagnostic tool. The values shown in this conformity check are given as a guide. **Application conditions:** Engine **warm at idle speed**.

DRIVER PARAMETERS SUBFUNCTION: (continued 1)

Order	Function	Parameter or Status Checked or Action		Display and notes	Fault finding
11	**Accelerator pedal**	**ET081:**	Accelerator pedal position	**No load Full load NOT DETECTED**	In the event of a fault apply the interpretation of **PR030 Accelerator pedal position**
12		**PR030:**	Accelerator pedal position	**No load = < 16% Full load = 85%**	In the event of a fault, apply the interpretation of faults **DF008** and **DF009potentiometer circuit gang 1 and gang 2**, then **DF011** and **DF012 Sensor feed voltage 1 and 2**.
13		**PR112:**	No load programmed value	**0% < PR112 < 16%**	**Run command RZ005 Programming. If the parameters and statuses are still faulty, contact your Techline.**
14	**Accelerator pedal and motorised throttle**	**ET075:**	Pedal released and throttle closed	**DETECTED**	If **NOT DETECTED**, apply the interpretation of **PR030 Accelerator pedal position** followed by the interpretation of fault **DF079 Motorised throttle valve servo control**.
15	**Motorised throttle**	**AC027:**	Motorised throttle	**The motorised throttle should be heard operating**	In the event of a fault, apply the interpretation of **AC027 Motorised throttle**

GETtheMANUALS.org

NOTES	Only carry out this conformity check after a **complete check** using the diagnostic tool. The values shown in this conformity check are given as a guide. **Application conditions:** Engine **warm at idle speed**.

PREHEATING/IGNITION SUBFUNCTION:

Order	Function	Parameter or Status Check or Action		Display and notes	Fault finding
1	**Flywheel target**	**ET089:**	Flywheel target programming	**NOT PERFORMED COMPLETED**	**NONE**
2	**Flywheel**	**ET062:**	Flywheel signal	**NOT DETECTED**	In the event of a fault, apply the interpretation of status **ET062 Flywheel signal**.
3	**Ignition**	**PR001:**	Advance	**- 23.6 °V < PR001 < 72 °V**	**NONE**
4		**PR095:**	Anti-pinking correction	**0 °V < PR095 < 8 °V**	
5		**PR126:**	advance after anti-pinking correction	**- 23.6 °V < PR126 < 72 °V**	
6	**Combustion misfire**	**ET057:**	Misfiring on cylinder 1	**NO**	
7		**ET058:**	Misfiring on cylinder 2	**NO**	
8		**ET059:**	Misfiring on cylinder 3	**NO**	
9		**ET060:**	Misfiring on cylinder 4	**NO**	

GETtheMANUALS.org

NOTES	Only carry out this conformity check after a **complete check** using the diagnostic tool. The values shown in this conformity check are given as a guide. **Application conditions:** Engine **warm at idle speed**.

EMISSION CONTROL/OBD SUBFUNCTION:

Order	Function	Parameter or Status Checked or Action		Display and notes	Fault finding
1	**Oxygen sensor**	**ET052:**	Upstream O_2 sensor heating	**INACTIVE**	If **ACTIVE**, apply the interpretation of **ET052 Upstream O_2 sensor heating**.
2		**ET053:**	Downstream O_2 sensor heating	**INACTIVE**	Si **ACTIF**, apply the interpretation of **ET053 Downstream O_2 sensor heating**.
3		**PR098:**	Upstream oxygen sensor voltage	**50 mV < PR098 < 800 mV**	In the event of a fault, apply the interpretation of **PR098 Upstream oxygen sensor voltage**.
4		**PR099:**	Downstream oxygen sensor voltage	**50 mV < PR099 < 800 mV**	In the event of a fault, apply the interpretation of **PR099 Downstream oxygen sensor voltage**.
5	**Canister**	**ET050:**	Canister bleed control	**INACTIVE**	In the event of a fault, apply the interpretation of **DF081 Canister bleed solenoid valve circuit**.
6		**PR102:**	Canister bleed solenoid valve OCR	**0% < PR102 < 100%**	
7	**Oxygen sensor**	**AC018:**	Upstream O_2 sensor heating	**The upstream oxygen sensor should heat up**	In the event of a fault, apply the interpretation of **DF082 Upstream O_2sensor heating circuit**.
8		**AC019:**	Downstream O_2 sensor heating	**The downstream oxygen sensor should heat up**	In the event of a fault, apply the interpretation of **DF083 Downstream O_2 sensor heating circuit**.

GETtheMANUALS.org

NOTES	Only carry out this conformity check after a **complete check** using the diagnostic tool. The values shown in this conformity check are given as a guide. **Application conditions:** Engine **warm at idle speed**.

COLD LOOP SUB-FUNCTION:

Order	Function	Parameter or Status Checked or Action	Display and notes	Fault finding
1	**Air conditioning**	**ET079:** Air conditioning present	**Shows whether or not the vehicle is equipped with air conditioning.** **YES:** Air conditioning is detected by the injection computer. **NO:** Air conditioning is not detected by the injection computer.	**If inconsistent with the vehicle equipment, carry out a multiplex network test and apply the relevant procedure.**
2		**ET088:** Compressor actuation request	**The injection requests the UCH (via the multiplex network) to start the compressor.** **ACTIVE:** The multiplex network must not be faulty on the ATX, relay/fuse box or UCH systems. The UCH must send a compressor starting request to the injection. The coolant pressure sensor must not be defective. Satisfactory engine operating conditions (coolant temperature, engine load, etc.). **INACTIVE:** One of the above conditions has not been met.	**NONE**
3	**Engine speed**	**PR145:** Engine speed	**Shows the speed of rotation in rpm.** **PR145 = 0 rpm**	In the event of a fault, apply the interpretation of **DF154 Flywheel signal sensor circuit**.

GETtheMANUALS.org

NOTES	Only carry out this conformity check after a **complete check** using the diagnostic tool. The values shown in this conformity check are given as a guide. **Application conditions:** Engine **warm at idle speed**.

SUB-FUNCTION COLD LOOP (continued):

Order	Function	Parameter or Status Check or Action	Display and notes	Fault finding
6	**Motorised throttle**	**ET023:** Fast idle speed request	**UCH requests the injection system to increase the idling speed.** **ABSENT:** The UCH has not made a request. **PRESENT:** The UCH has made a request	**If ET023 is inconsistent, perform a multiplex network test using the diagnostic tool, then if the test is correct, perform fault finding on the UCH**
7	**Coolant temperature**	**PR064:** Coolant temperature	**- 40˚C < PR064 < 120˚C**	In the event of a fault, apply the interpretation of **DF001 Coolant temperature sensor circuit**.
8	**Vehicle speed**	**PR155:** Vehicle speed	**Gives the vehicle speed in mph (km/h). This parameter is sent to the injection by the ABS computer via the multiplex network.**	In the event of a fault, apply the interpretation of **DF091 Vehicle speed signal**.

GETtheMANUALS.org

NOTES	Only carry out this conformity check after a **complete check** using the diagnostic tool. The values shown in this conformity check are given as a guide. **Application conditions:** Engine **warm at idle speed**.

HEATING SUBFUNCTION:

Order	Function	Parameter or Status Check or Action		Display and notes	Fault finding
1	**Coolant temperature**	**PR064:**	Coolant temperature	**- 40˚C < PR064 < 120˚C**	In the event of a fault, apply the interpretation of **DF001 Coolant temperature sensor circuit**.
2	**Thermoplungers**	**PR372:**	Number of active thermoplungers	**0 < PR372 < 2**	In the event of a fault, apply the interpretation of **DF167 Thermoplunger relay circuit**.

GETtheMANUALS.org

NOTES	Only carry out this conformity check after a **complete check** using the diagnostic tool. The values shown in this conformity check are given as a guide. **Application conditions:** Engine **warm at idle speed**.

SUB-FUNCTION: CRUISE CONTROL / SPEED LIMITER

Order	Function	Parameter or Status Check or Action		Display and notes	Fault finding
1	Cruise control/Speed limiter	**ET042:**	Cruise control/ Speed limiter	**CRUISE CONTROL SPEED LIMITER**	In the event of a fault, use the interpretation of **ET042 Cruise control/Speed limiter**.
2		**ET413:**	Cruise control/ speed limiter function	**DECREASE** **INCREASE** **SUSPEND** **RESUME**	In the event of a fault, apply the interpretation of **ET045 Cruise control/Speed limiter function selectors on the steering wheel**.
3		**ET415:**	Deactivation of cruise control/ speed limiter	**STATUS 1:** Traction control request **STATUS 2:** Brake pedal depressed **STATUS 3:** Cruise control or speed limiter fault **STATUS 4:** Engine/gearbox decoupling **STATUS 5:** Fault detected by the injection computer **STATUS 6:** Vehicle speed invalid **STATUS 7:** Suspend button pressed **STATUS 8:** Gear selector lever in neutral **STATUS 9:** Inconsistency between the request and the vehicle speed	**NONE**
4	**Vehicle speed**	**PR155:**	vehicle speed	**Gives the vehicle speed in mph (km/h). This parameter is sent to the injection by the ABS computer via the multiplex network.**	In the event of a fault, apply the interpretation of **DF091 Vehicle speed signal.**

GETtheMANUALS.org

NOTES	Only carry out this conformity check after a **complete check** using the diagnostic tool. The values shown in this conformity check are given as a guide. **Application conditions:** Engine **warm at idle speed**.

SUB-FUNCTION: CRUISE CONTROL/SPEED LIMITER (CONTINUED):

Order	Function	Parameter or Status Checked or Action	Display and notes	Fault finding
5	Clutch contact	**ET233:** Clutch pedal	**Indicates recognition of clutch pedal contacts**. **RELEASED:** Pedal released **DEPRESSED:** Pedal depressed. **If the vehicle has an automatic gearbox**, **status ET233 DEPRESSED**.	In the event of a fault, use the interpretation of **ET040 Clutch pedal**.
6	Automatic gearbox	**ET063:** Park/Neutral position	**Automatic gearbox only.** **YES:** automatic gearbox in park/neutral position. **NO:** automatic gearbox not in park/neutral position. **If the vehicle does not have an automatic gearbox, status ET063 should be YES.**	**In the event of a fault, carry out a multiplex network test, then if the test is correct, look at the automatic gearbox.**

GETtheMANUALS.org

NOTES	Only carry out this conformity check after a **complete check** using the diagnostic tool. The values shown in this conformity check are given as a guide. **Application conditions:** Engine **warm at idle speed**.

START SUBFUNCTION:

Order	Function	Parameter or Status Check or Action		Display and notes	Fault finding
1	**Battery voltage**	**ET001:**	Computer + after ignition feed	**Presence of + After ignition feed**	In the event of a fault, apply the interpretation of **PR074 Battery voltage**.
2	**Actuator relay control**	**ET048:**	Actuator relay control	**ACTIVE**	If **INACTIVE**, apply the interpretation of **DF084 Actuator relay control circuit**.
3	**Battery voltage**	**PR074:**	Battery voltage	**11 V < PR074 < 15 V**	In the event of a fault, apply the interpretation of **DF046 Battery voltage**.

GETtheMANUALS.org

NOTES	Only carry out this conformity check after a **complete check** using the diagnostic tool. The values shown in this conformity check are given as a guide. **Application conditions:** Engine **warm at idle speed**.

PROTECTION SUBFUNCTION:

Order	Function	Parameter or Status Checked or Action		Display and notes	Fault finding
1	**Code programmed**	**ET006:**	Code programmed	**Indicates whether or not the immobiliser code has been programmed by the computer.** **YES:** Code programmed **NO:** Code not programmed into the injection computer.	**If NO, contact the Techline.**
2	**Engine immobiliser**	**ET003:**	Engine immobiliser	**Indicates the status of the immobiliser system.** **INACTIVE:** the injection computer has recognised the immobiliser code transmitted by the UCH. **ACTIVE:** the injection computer does not recognise the immobiliser code transmitted by the UCH.	**If ET003 is inconsistent, run a multiplex network test using the diagnostic tool; then if the test is in order, carry out fault finding on the UCH.**
3	**Impact detected**	**ET077:**	Impact detected	**NO**	**If YES, switch off the ignition for 10 seconds, then switch it back on so the engine can be restarted. Then clear any faults.**

GETtheMANUALS.org

NOTES	Only carry out this conformity check after a **complete check** using the diagnostic tool. The values shown in this conformity check are given as a guide. **Application conditions:** Engine **warm at idle speed**.

TORQUE MANAGEMENT SUB-FUNCTION:

Order	Function	Parameter or Status Check or Action		Display and notes	Fault finding
1	**Torque**	**PR015:**	Engine torque	**0 N.m**	**In the event of a fault, carry out a multiplex network test, then if the test is correct, perform fault finding on the automatic gearbox.**
2		**PR122:**	Torque received by automatic transmission converter	**0 N.m**	

GETtheMANUALS.org

NOTES	Only carry out this conformity check after a **complete check** using the diagnostic tool. The values shown in this conformity check are given as a guide. **Application conditions:** Engine **warm at idle speed**.

MAIN COMPUTER STATUSES AND PARAMETERS

Order	Function	Parameter or Status Check or Action		Display and notes	Fault finding
1	Battery voltage	**ET001:**	Computer + after ignition feed	**Presence of + After ignition feed**	In the event of a fault, apply the interpretation of **DF046 Battery voltage**.
2		**PR074:**	Battery voltage	**11 V < PR071 < 15 V**	
3	**Vehicle speed**	**PR155:**	Vehicle speed	**Gives the vehicle speed in mph (km/h). This parameter is sent to the injection by the ABS computer via the multiplex network.**	In the event of a fault, apply the interpretation of fault **DF091 Vehicle speed signal**.
4	Faults	**ET074:**	OBD warning light illuminated by AUTO	**YES** **NO**	**NONE**
5		**ET064:**	Level 1 injection fault	**ON** **OFF**	
6		**ET065:**	Level 2 Injection fault	**ON** **OFF**	
7		**PR106:**	Mileometer fault warning light lit	**Shows the distance covered with the warning light lit.**	
8		**PR105:**	Mileage counter OBD fault warning light on	**Indicates the mileage covered with the OBD warning light lit.**	

GETtheMANUALS.org

NOTES	Only carry out this conformity check after a **complete check** using the diagnostic tool. The values shown in this conformity check are given as a guide. **Application conditions:** Engine **warm at idle speed**.

AIR CIRCULATION SUB-FUNCTION (TURBO / INLET):

Order	Function	Parameter or Status Checked or Action		Display and notes	Fault finding
1	**Air circuit pressure**	**PR035:**	Atmospheric pressure	**200 mb < PR035 < 1047 mb**	If not consistent, check **PR035 = PR421 = Local atmospheric pressure**, with the engine stopped and ignition on. **Only for F4R□T PR035 = PR421 = PR041**. In the event of a fault, apply the interpretation of **PR421 Manifold pressure**.
2		**PR421:**	Manifold pressure	**200 mb < PR421 < 2500 mb**	
3		**PR041:**	Turbocharging pressure	**200 mb < PR041 < 2500 mb** **default value = 103 mb**	
3	**Air temperature**	**PR058:**	Air temperature	**- 40˚C < PR058 < 120˚C**	In the event of a fault, apply the interpretation of **DF002 Air temperature sensor circuit**.
4	**Coolant temperature**	**PR064:**	Coolant temperature	**75˚C < PR058 < 120˚C**	In the event of a fault, apply the interpretation of **DF001 Coolant temperature sensor circuit**.
5	**Air flow**	**PR018:**	Estimated air flow	**Indicates the air flow value estimated by the motorised throttle valve.**	In the event of a fault, apply the interpretation of faults **DF095 Throttle potentiometer circuit gang 1** and **DF096 Throttle potentiometer circuit gang 2**.

GETtheMANUALS.org

NOTES	Only carry out this conformity check after a **complete check** using the diagnostic tool. The values shown in this conformity check are given as a guide. **Application conditions:** Engine **warm at idle speed**.

AIR CIRCULATION SUB-FUNCTION (TURBO/INLET) (CONTINUED):

Order	Function	Parameter or Status Check or Action		Display and notes	Fault finding
6	**Camshaft dephaser**	**ET083:**	Camshaft dephaser in defect mode	**STATUS 1:** This defect mode covers all faults that affect the dephaser position measurement. The dephaser is set to the lower stop and the camshaft angle measurement is forced to 0. Tooth signal fault. **STATUS 2:** This defect mode covers all faults that affect the dephaser (pulley and solenoid valve). The dephaser is set to the low stop. **NO**	If **STATUS 1**, run fault finding on the camshaft signal/tooth consistency. If **STATUS 2**, carry out fault finding on the camshaft dephaser position.
7		**ET084:**	Camshaft dephaser	**STATUS 1:** No camshaft dephaser (on F4R-T) **STATUS 2:** On/off camshaft dephaser (on F4R) **STATUS 3:** Continuous camshaft dephaser (on K4M)	**NONE**
8		**ET086:**	Camshaft dephaser control	**For K4M and F4R engines only.** Indicates whether or not the camshaft dephaser is functioning.	For the continuous camshaft dephaser only: **check that PR093 = PR745**.
9		**PR093:**	Camshaft dephaser measured position	Indicates dephasing value measured. **On K4M only**	**NONE**
10		**PR745:**	Camshaft dephaser position setpoint	Indicates the required camshaft dephasing value. **On K4M only**	**NONE**
11		**PR876:**	Camshaft dephaser solenoid control OCR	Indicates the opening percentage of the solenoid valve required for the camshaft dephasing	**NONE**

GETtheMANUALS.org

NOTES	Only carry out this conformity check after a **complete check** using the diagnostic tool. The values shown in this conformity check are given as a guide. **Application conditions:** Engine **warm at idle speed**.

FUEL CIRCUIT SUB-FUNCTION:

Order	Function	Parameter or Status Checked or Action		Display and notes	Fault finding
1	**Engine speed**	**PR145:**	Engine speed	**Indicates the engine's speed of rotation in rpm.** **700 rpm < PR145 < 6500 rpm**	In the event of a fault, apply the interpretation for **DF154 Flywheel signal sensor circuit**.
2	**Motorised throttle**	**PR014:**	Idling speed correction	**Shows engine idling speed correction value.** **0 rpm < PR014 < 224 rpm.** **The idling speed regulator performs all the calculations required for physical control of the idling actuator: the motorised throttle. The functional component of the regulator is adaptive (variation programming and ageing).**	**NONE**
3		**PR536:**	Idling regulation valve setpoint	**The idling regulation valve setpoint depends on oil and coolant temperature, the position of the gearbox selector, and which electrical consumers are running.** **752 rpm < PR536 < 1216 rpm.** **If a manifold pressure sensor fault is present or stored, the idle speed setting is 896 rpm.**	In the event of a fault, apply the interpretation of **ET054 Idle speed regulation**.
4		**ET054:**	Idle speed regulation	**ACTIVE**	If **INACTIVE** apply the interpretation of **ET054 Idle speed regulation**.

GETtheMANUALS.org

NOTES	Only carry out this conformity check after a **complete check** using the diagnostic tool. The values shown in this conformity check are given as a guide. **Application conditions:** Engine **warm at idle speed**.

FUEL CIRCUIT SUB-FUNCTION: (continued 1)

Order	Function	Parameter or Status Checked or Action		Display and notes	Fault finding
5	**Motorised throttle**	**PR090:**	Idle speed regulation programming value	**- 12% < PR090 < 12%** **PR090, an adaptive built-in action, is a stored parameter designed to program variation and engine ageing for the idle speed regulator. These are programmed only when the engine is idling and warm, and no electrical consumers (electrical windscreen, air conditioning, GMV, power steering) have been selected. Therefore it adjusts slowly.**	**NONE**
6		**PR444:**	Idling speed regulation built-in correction.	**4.7% < PR141 < 32%** **The built-in correction is continuously calculated to take into account consumer air demand.**	
7	**Motorised throttle**	**PR091:**	Theoretical idle speed regulation OCR	**5% < PR091 < 50%** **When the conditions for regulation are met, the idle regulator continually repositions the motorised throttle to keep the engine speed at the idling speed setting. The motorised throttle opening ratio required to adhere to the engine speed setpoint is then given by parameter PR091.**	

GETtheMANUALS.org

NOTES	Only carry out this conformity check after a **complete check** using the diagnostic tool. The values shown in this conformity check are given as a guide. **Application conditions:** Engine **warm at idle speed**.

FUEL CIRCUIT SUB-FUNCTION: (continued 2)

Order	Function	Parameter or Status Checked or Action		Display and notes	Fault finding
8	**Oxygen sensor**	**ET055:**	Upstream sensor richness loop	**Loop open**	In the event of a fault, apply the interpretation of **ET055 Upstream sensor richness loop**.
9		**ET056:**	Richness double loop	**ACTIVE**	In the event of a fault, apply the interpretation of **ET056 Double richness loop**.
10		**PR138:**	Richness correction	**0% < PR138 < 100%** **In looping, the richness correction corrects the injection time to obtain a fuel mixture which is as close as possible to a richness of 1. The correction value therefore oscillates around 50.**	**NONE**
11		**PR144:**	Self-adapting richness offset	**0 < PR144 < 255** **This parameter is used to detect any tendency of the injection system to increase or decrease the richness.**	
12		**PR143:**	Self-adapting richness gain	**0 < PR143 < 255** **This parameter is used to detect any tendency of the injection system to increase or decrease the richness.**	

GETtheMANUALS.org

NOTES	Only carry out this conformity check after a **complete check** using the diagnostic tool. The values shown in this conformity check are given as a guide. **Application conditions:** Engine **warm at idle speed**.

FUEL CIRCUIT SUB-FUNCTION: (continued 3)

Order	Function	Parameter or Status Checked or Action		Display and notes	Fault finding
13	**Injection**	**PR101:**	Duration of injection	**0 ms < PR101 < 20000 ms**	**NONE**
14	**Fuel consumption**	**PR103:**	Instantaneous fuel consumption	**0 l/h < PR103 < 50 l/h**	
15	**Fuel pump**	**ET047:**	Fuel pump control circuit	**ACTIVE**	If **INACTIVE**, apply the interpretation of **DF085 Fuel pump relay control circuit**.
16		**AC015:**	Fuel pump relay	**The fuel pump should be heard operating**	In the event of a fault, apply the interpretation of **AC015 Fuel pump relay**.

GETtheMANUALS.org

NOTES	Only carry out this conformity check after a **complete check** using the diagnostic tool. The values shown in this conformity check are given as a guide. **Application conditions:** Engine **warm at idle speed**.

DRIVER PARAMETERS SUB FUNCTION:

Order	Function	Parameter or Status Check or Action		Display and notes	Fault finding
1	Motorised throttle	**ET051:**	Throttle stop programming	**COMPLETED**	**Run command RZ005 Programming. If the parameters or statuses are still not correct, contact the Techline.**
2		**ET082:**	Motorised throttle position	**CLOSED (only when idling)**	
3		**PR097:**	Motorised throttle lower stop programmed value.	**5.96% < PR097 < 13.96%**	
4		**PR096:**	Motorised throttle upper stop programmed value	**80% < PR096 < 100%**	
5		**ET564:**	Type 1 defect mode	**NO**	**In the event of a fault**, apply the interpretation of **ET564 Type 1 defect mode**.
6		**ET565:**	Type 2 defect mode	**NO**	In the event of a fault, apply the interpretation of **ET565 Type 2 defect mode**.
7		**ET566:**	Type 3 defect mode	**NO**	**In the event of a fault, apply the interpretation of ET566 Type 3 defect mode**.
8		**ET567:**	Type 4 defect mode	**NO**	In the event of a fault, apply the interpretation of **ET567 Type 4 defect mode**.
9		**ET568:**	Type 5 defect mode	**NO**	In the event of a fault, apply the interpretation of **ET568 Type 5 defect mode**.
10		**ET569:**	Type 6 defect mode	**NO**	In the event of a fault, apply the interpretation of **ET569 Type 6 defect mode**.

GETtheMANUALS.org

NOTES	Only carry out this conformity check after a **complete check** using the diagnostic tool. The values shown in this conformity check are given as a guide. **Application conditions:** Engine **warm at idle speed**.

DRIVER PARAMETERS SUBFUNCTION: (continued 1)

Order	Function	Parameter or Status Checked or Action		Display and notes	Fault finding
11	**Accelerator pedal**	**ET081:**	Accelerator pedal position	**No load Full load NOT DETECTED**	In the event of a fault, apply the interpretation of **PR030 Accelerator pedal position**
12		**PR030:**	Accelerator pedal position	**No load = 0% Full load = 100%**	In the event of a fault, apply the interpretation of faults **DF008** and **DF009 Pedal potentiometer circuit gang 1 and gang 2**, then **DF011 and DF012 Sensor supply voltage no. 1 and 2**.
13	**Accelerator pedal**	**PR112:**	No load programmed value	**0% < PR112 < 15.625%**	**Run command RZ005 Programming. If the parameters or statuses are still not correct, contact the Techline.**
14	**Accelerator pedal and motorised throttle**	**ET075:**	Pedal released and throttle closed	**DETECTED**	If **NOT DETECTED**, apply the interpretation of **PR030 Accelerator pedal position**, then the interpretation of **ET082 Motorised throttle position**.
15	**Motorised throttle**	**AC027:**	Motorised throttle	**The motorised throttle should be heard operating**	In the event of a fault, apply the interpretation of **AC027 Motorised throttle**.

GETtheMANUALS.org

NOTES	Only carry out this conformity check after a **complete check** using the diagnostic tool. The values shown in this conformity check are given as a guide. **Application conditions:** Engine **warm at idle speed**.

PREHEATING/IGNITION SUBFUNCTION:

Order	Function	Parameter or Status Check or Action		Display and notes	Fault finding
1	**Flywheel target**	**ET089:**	Flywheel target programming	**COMPLETED**	**NONE**
2	**Flywheel**	**ET062:**	Flywheel signal	**DETECTED**	In the event of a fault, apply the interpretation of **ET062 Flywheel signal**.
3	**Ignition**	**PR001:**	Advance	**- 23.6˚ V < PR001 < 72˚ V**	**NONE**
4		**PR095:**	Anti-pinking correction	**0 ˚V < PR095 < 8 ˚V**	
5		**PR126:**	advance after anti-pinking correction	**- 23.6˚ V < PR126 < 72˚ V**	
6	**Combustion misfire**	**ET057:**	Misfiring on cylinder 1	**NO**	
7		**ET058:**	Misfiring on cylinder 2	**NO**	
8		**ET059:**	Misfiring on cylinder 3	**NO**	
9		**ET060:**	Misfiring on cylinder 4	**NO**	

GETtheMANUALS.org

NOTES	Only carry out this conformity check after a **complete check** using the diagnostic tool. The values shown in this conformity check are given as a guide. **Application conditions:** Engine **warm at idle speed**.

EMISSION CONTROL/OBD SUBFUNCTION:

Order	Function	Parameter or Status Checked or Action		Display and notes	Fault finding
1	Oxygen sensor	**ET052:**	Upstream O_2 sensor heating	**ACTIVE INACTIVE**	In the event of a fault, apply the interpretation of **ET052 Upstream O_2 sensor heating**.
2		**ET053:**	Downstream O_2 sensor heating	**ACTIVE INACTIVE**	In the event of a fault, apply the interpretation of **ET053 Downstream O_2 sensor heating**.
3		**PR098:**	Upstream oxygen sensor voltage	**50 mV < PR098 < 800 mV.**	In the event of a fault, apply the interpretation of **PR098 Upstream oxygen sensor voltage**.
4		**PR099:**	Downstream oxygen sensor voltage	**50 mV < PR099 < 800 mV**	In the event of a fault, apply the interpretation of **PR099 Downstream oxygen sensor voltage**.
5	Canister	**ET050:**	Canister bleed control	**INACTIVE**	In the event of a fault, apply the interpretation of **DF081 Canister bleed solenoid valve circuit**.
6		**PR102:**	Canister bleed solenoid valve OCR	**0% < PR102 < 100%**	
7	Oxygen sensor	**AC018:**	Upstream O_2 sensor heating	**The upstream oxygen sensor should heat up**	In the event of a fault, apply the interpretation of **DF082 Upstream O_2 sensor heating circuit**.
8		**AC019:**	Downstream O_2 sensor heating	**The downstream oxygen sensor should heat up**	In the event of a fault, apply the interpretation of **DF083 Downstream O_2 sensor heating circuit**.

GETtheMANUALS.org

NOTES	Only carry out this conformity check after a **complete check** using the diagnostic tool. The values shown in this conformity check are given as a guide. **Application conditions:** Engine **warm at idle speed**.

COLD LOOP SUB-FUNCTION:

Order	Function	Parameter or Status Checked or Action	Display and notes	Fault finding
1	**Air conditioning**	**ET079:** Air conditioning present	**Shows whether or not the vehicle is equipped with air conditioning.** **YES:** Air conditioning is detected by the injection computer. **NO:** Air conditioning is not detected by the injection computer.	**If inconsistent with the vehicle equipment, carry out a multiplex network test and apply the relevant procedure.**
2		**ET088:** Compressor actuation request	**The injection requests the UCH (via the multiplex network) to start the compressor.** **ACTIVE:** The multiplex network must not be faulty on the ATX, relay/fuse box or UCH systems. The UCH must send a compressor starting request to the injection. The coolant pressure sensor must not be defective. Satisfactory engine operating conditions (coolant temperature, engine load, etc.). **INACTIVE:** One of the above conditions has not been met.	**NONE**
3	**Engine speed**	**PR145:** Engine speed	**Indicates the speed of rotation in rpm.** **700 rpm < PR145 < 6500 rpm**	In the event of a fault, apply the interpretation for **DF154 Flywheel signal sensor circuit**.

GETtheMANUALS.org

NOTES	Only carry out this conformity check after a **complete check** using the diagnostic tool. The values shown in this conformity check are given as a guide. **Application conditions:** Engine **warm at idle speed**.

COLD LOOP SUB-FUNCTION: (continued 1)

Order	Function	Parameter or Status Check or Action	Display and notes	Fault finding
5	**Motorised throttle**	**ET023:** Fast idle speed request	**UCH requests the injection system to increase the idling speed.** **ABSENT:** The UCH has not made a request. **PRESENT:** The UCH has made a request.	**If ET023 is inconsistent, run a multiplex network test using the diagnostic tool; then if the test is in order, consult the UCH.**
6	**Coolant temperature**	**PR064:** Coolant temperature	**75˚C < PR064 < 120˚C**	In the event of a fault, apply the interpretation of **DF001 Coolant temperature sensor circuit**.
7	**Vehicle speed**	**PR155:** Vehicle speed	**Gives the vehicle speed in mph (km/h). This parameter is sent to the injection by the ABS computer via the multiplex network.**	In the event of a fault, apply the interpretation of **DF091 Vehicle speed signal**.

GETtheMANUALS.org

NOTES	Only carry out this conformity check after a **complete check** using the diagnostic tool. The values shown in this conformity check are given as a guide. **Application conditions:** Engine **warm at idle speed**.

HEATING SUBFUNCTION:

Order	Function	Parameter or Status Check or Action		Display and notes	Fault finding
1	**Coolant temperature**	**PR064:**	Coolant temperature	**75˚C < PR064 < 120˚C**	In the event of a fault, apply the interpretation of **DF001 Coolant temperature sensor circuit**.
2	**Thermoplungers**	**PR372:**	Number of active thermoplungers	**0 < PR372 < 2**	In the event of a fault, apply the interpretation of **DF167 Thermoplunger relay circuit**.

GETtheMANUALS.org

NOTES	Only carry out this conformity check after a **complete check** using the diagnostic tool. The values shown in this conformity check are given as a guide. **Application conditions:** Engine **warm at idle speed**.

SUB-FUNCTION: CRUISE CONTROL / SPEED LIMITER

Order	Function	Parameter or Status Checked or Action		Display and notes	Fault finding
1	Cruise control/ Speed limiter	**ET042:**	Cruise control/ Speed limiter	**CRUISE CONTROL SPEED LIMITER**	In the event of a fault, use the interpretation of **ET042 Cruise control/Speed limiter**.
2		**ET413:**	Cruise control/ speed limiterfunction	**DECREASE INCREASE SUSPEND RESUME**	In the event of a fault, apply the interpretation of **ET045 Cruise control/Speed limiter function selectors on the steering wheel**.
3		**ET415:**	Deactivation of cruise control/ speed limiter	**STATUS 1:** Traction control request **STATUS 2:** Brake pedal depressed **STATUS 3:** Cruise control or speed limiter fault **STATUS 4:** Engine/gearbox decoupling **STATUS 5:** Fault detected by the injection computer **STATUS 6:** Vehicle speed invalid **STATUS 7:** Suspend button pressed **STATUS 8:** Gear selector lever in neutral **STATUS 9:** Inconsistency between the request and the vehicle speed	**NONE**
4	**Vehicle speed**	**PR155:**	Vehicle speed	**Gives the vehicle speed in mph (km/h). This parameter is sent to the injection by the ABS computer via the multiplex network.**	In the event of a fault, apply the interpretation of **DF091 Vehicle speed signal.**

GETtheMANUALS.org

NOTES	Only carry out this conformity check after a **complete check** using the diagnostic tool. The values shown in this conformity check are given as a guide. **Application conditions:** Engine **warm at idle speed**.

SUB-FUNCTION: CRUISE CONTROL/SPEED LIMITER (CONTINUED):

Order	Function	Parameter or Status Checked or Action	Display and notes	Fault finding
5	Clutch contact	**ET233:** Clutch pedal	**Indicates recognition of clutch pedal contacts** **RELEASED:** Pedal released **DEPRESSED:** Pedal depressed **If the vehicle has an automatic gearbox, status ET233 should be DEPRESSED.**	In the event of a fault, use the interpretation of **ET040 Clutch pedal**.
6	Automatic gearbox	**ET063:** Park / Neutral position	**AT only.** **YES:** automatic gearbox in park/neutral position. **NO:** automatic gearbox not in park/neutral position **If the vehicle does not have an automatic gearbox, status ET063 should be YES.**	**In the event of a fault, carry out a multiplex network test, then if the test is correct, look at the automatic gearbox.**

GETtheMANUALS.org

NOTES	Only carry out this conformity check after a **complete check** using the diagnostic tool. The values shown in this conformity check are given as a guide. **Application conditions:** Engine **warm at idle speed**.

START SUBFUNCTION:

Order	Function	Parameter or Status Check or Action		Display and notes	Fault finding
1	**Battery voltage**	**ET001:**	Computer + after ignition feed	**Presence of + After ignition feed**	In the event of a fault, apply the interpretation of **DF046 Battery voltage**.
2	**Actuator relay control**	**ET048:**	Actuator relay control	**ACTIVE**	If **INACTIVE**, apply the interpretation of DF084 Actuator relay control circuit.
3	**Battery voltage**	**PR074:**	Battery voltage	**11 V < PR074 < 15 V**	In the event of a fault, apply the interpretation of **PR074 Battery voltage**.

GETtheMANUALS.org

NOTES	Only carry out this conformity check after a **complete check** using the diagnostic tool. The values shown in this conformity check are given as a guide. **Application conditions:** Engine **warm at idle speed**.

PROTECTION SUBFUNCTION:

Order	Function	Parameter or Status Checked or Action	Display and notes	Fault finding
1	**Code programmed**	**ET006:** Code programmed	**Indicates whether or not the immobiliser code has been programmed by the computer.** – **YES:** Code programmed – **NO:** Code not programmed into the injection computer.	**If NO, contact the Techline**
2	**Engine immobiliser**	**ET003:** Engine immobiliser	**Indicates the status of the immobiliser system.** – **INACTIVE:** the injection computer has recognised the immobiliser code transmitted by the UCH. – **ACTIVE:** the injection computer does not recognise the immobiliser code transmitted by the UCH.	**If ET003 is inconsistent, run a multiplex network test using the diagnostic tool; then if the test is in order, carry out fault finding on the UCH.**
3	**Impact detected**	**ET077:** Impact detected	**NO**	**If YES, switch off the ignition for 10 seconds, then switch it back on so the engine can be restarted. Then clear any faults**

GETtheMANUALS.org

NOTES	Only carry out this conformity check after a **complete check** using the diagnostic tool. The values shown in this conformity check are given as a guide. **Application conditions:** Engine **warm at idle speed**.

TORQUE MANAGEMENT SUB-FUNCTION:

Order	Function	Parameter or Status Check or Action		Display and notes	Fault finding
1	Torque	**PR015:**	Engine torque	**- 50 N.m < PR015 < 200 N.m**	**In the event of a fault, carry out a multiplex network test, then if the test is correct, perform fault finding on the automatic gearbox.**
2		**PR122:**	Torque received by automatic transmission converter	**0 N.m**	

GETtheMANUALS.org

Tool Status	Diagnostic tool title
ET001	+ After ignition computer feed
ET003	Engine immobiliser
ET006	Code programmed
ET023	Fast idle speed request
ET042	Cruise control/speed limiter
ET047	Fuel pump control circuit
ET048	Actuator relay control
ET049	Air pump relay control
ET050	Canister bleed control
ET051	Throttle stop programming
ET052	Upstream O_2 sensor heating
ET053	Downstream O_2 sensor heating
ET054	Idle speed regulation
ET055	Upstream sensor richness loop.
ET056	Richness double loop
ET057	Misfiring on cylinder 1
ET058	Misfiring on cylinder 2
ET059	Misfiring on cylinder 3
ET060	Misfiring on cylinder 4
ET062	Flywheel signal
ET063	Park/Neutral position
ET064	Level 1 injection fault
ET065	Level 2 Injection fault
ET074	OBD warning light illuminated by AUTO
ET075	Pedal released and throttle closed

GETtheMANUALS.org

Tool Status	Diagnostic tool title
ET077	Impact detected
ET079	Air conditioning present
ET081	Accelerator pedal position
ET082	Motorised throttle position
ET083	Camshaft dephaser in defect mode
ET084	Camshaft dephaser
ET086	Camshaft dephaser control
ET088	Compressor actuation request
ET089	Flywheel target programming
ET143	Low speed fan assembly relay control
ET144	High speed fan assembly relay control
ET233	Clutch pedal
ET413	Cruise control/speed limiter function
ET415	Cruise control/speed limiter deactivation
ET543	Coolant pump control
ET564	Type 1 defect mode
ET565	Type 2 defect mode
ET566	Type 3 defect mode
ET567	Type 4 defect mode
ET568	Type 5 defect mode
ET569	Type 6 defect mode

GETtheMANUALS.org

ET040	CLUTCH PEDAL

NOTES	There must be no present or stored faults.

Check that the pedal assembly is in good condition. Check **the cleanliness** and **condition** of the clutch pedal switch and its connections. Repair if necessary.
Check for **earth** on **track A1** of the clutch pedal switch. Repair if necessary.
Disconnect the battery and the injection computer. Check the **cleanliness** and **condition** of the connections. Using the Universal bornier, check the **insulation** and **continuity** on the following connection: Injection computer, connector **A, track C4** ⟶ **track B3** of the clutch pedal switch If the fault is still present, check the condition of intermediate connector **R262** on **track A4**. Repair if necessary.
If the fault is still present, replace the switch.

AFTER REPAIR	Repeat the conformity check from the start.

GETtheMANUALS.org

ET042	CRUISE CONTROL/SPEED LIMITER

NOTES	There must be no present or stored faults.
	IMPORTANT **To remove or check the Cruise control/speed limiter control switches you need to remove the airbag** See **MR 395, Mechanics, 88C, Airbag and pretensioners)**.

With the ignition on, check for **+ 12 V** on the cruise control/speed limiter selector switch connector (see **Technical Note, Wiring diagram, LAGUNA II, 1081**).
Repair if necessary.

Disconnect the battery.
Disconnect the computer. Check the **cleanliness** and **condition** of the connections.
Using the universal bornier, check the **insulation** and **continuity** of the following connections:

- Injection computer, connector **A, track A2** ⟶ **track A3** of the cruise control or speed limiter on/off switch
- Injection computer, connector **A, track C3** ⟶ **track B1** of the cruise control or speed limiter on/off switch

Repair if necessary.

If the fault is still present, replace the switch.

AFTER REPAIR	Repeat the conformity check from the start.

GETtheMANUALS.org

ET052	UPSTREAM O_2 SENSOR HEATING

NOTES	There must be no present or stored faults.

Check the **cleanliness** and **condition** of the upstream oxygen sensor and its connections. Repair if necessary.
Check for the **+ 12 V feed** on **track A** of the upstream oxygen sensor connector with the ignition on. Using the Universal bornier, check the **insulation** and **continuity** on the following connection: Injection computer, connector **B, track M2** ⟶ **track A** of the upstream oxygen sensor Repair if necessary.
Disconnect the battery and the injection computer. Check the **cleanliness and condition** of the connections. Using the Universal bornier, check the **insulation** and **continuity** on the following connection: Injection computer, connector **C, track L2** ⟶ **track B** of the upstream oxygen sensor Repair if necessary.
Measure the heating **resistance** between **tracks A** and **B** of the upstream oxygen sensor. Replace the upstream oxygen sensor if the **resistance** is not approximately **9 Ω at 20 °C**.
If the fault is still present, replace the upstream oxygen sensor.

AFTER REPAIR	Repeat the conformity check from the start.

GETtheMANUALS.org

ET053	DOWNSTREAM O_2 SENSOR HEATING

NOTES	There must be no present or stored faults.

Check **the cleanliness** and **condition** of the downstream oxygen sensor and its connections. Repair if necessary.
Check for the **+ 12 V feed** on **track A**, downstream oxygen sensor connector with the ignition on. Using the Universal bornier, check the **insulation** and **continuity** on the following connection: Injection computer, connector **B, track M2** ⟶ **track A** of the downstream oxygen sensor Repair if necessary.
Disconnect the battery and the injection computer. Check the **cleanliness and condition** of the connections. Using the Universal bornier, check the **insulation** and **continuity** on the following connection: Injection computer, connector **C, track L3** ⟶ **track B** of the downstream oxygen sensor Repair if necessary.
Measure the heating **resistance** between **tracks A** and **B** of the downstream oxygen sensor. Replace the downstream oxygen sensor if the **resistance** is not approximately **9 Ω at 20 °C**.
If the fault is still present, replace the downstream oxygen sensor.

AFTER REPAIR	Repeat the conformity check from the start.

GETtheMANUALS.org

ET054	IDLE SPEED REGULATION

NOTES	There must be no present or stored faults.
	Check parameters PR030, PR064, PR118, PR119 and PR421. Check that all these parameters are correct.

IDLE SPEED TOO LOW

Check:
– engine oil level (too high => splashing),
– that the exhaust pipe is not blocked (catalytic converter damaged),
– the cleanliness and conformity of the air filter,
– that the air inlet system is not blocked,
– that the throttle valve is not clogged,
– the condition and conformity of the spark plugs,
– the fuel circuit sealing,
– fuel pressure and flow (see **MR 395 Mechanics, 13A, Fuel supply**),
– the condition and cleanliness of the injectors,
– the engine compression,
– the timing adjustment,
– check the hydraulic tappets if there is camshaft noise (see **MR 395 Mechanics, 11A, top and front of engine**).
Repair the defective component if necessary.

AFTER REPAIR	Repeat the conformity check from the start.

GETtheMANUALS.org

ET054 **CONTINUED**	

IDLE SPEED TOO HIGH

Check:
– engine oil level (too high => oil combustion),
– that the restrictions are present in the oil vapour rebreathing circuit,
– the sealing between the throttle valve and inlet manifold,
– the manifold pressure sensor sealing,
– the fuel vapour absorber bleed, which must not be jammed open,
– the fuel vapour absorber bleed system sealing,
– the brake servo system sealing,
– the sealing between the inlet manifold and cylinder head,
– the oil vapour recovery circuit sealing between the inlet manifold and cylinder head,
– fuel pressure and flow (see **MR 395 Mechanics, 13A, Fuel supply**),
– the condition and cleanliness of the injectors,
– the engine compression,
– the timing adjustment,
– check the hydraulic tappets if there is camshaft noise (see **MR 395 Mechanics, 11A, top and front of engine**).
Repair the defective component if necessary.

AFTER REPAIR	Repeat the conformity check from the start.

GETtheMANUALS.org

ET055	UPSTREAM SENSOR RICHNESS LOOP

NOTES	There must be no present or stored faults.

Check the **cleanliness** and **condition** of the upstream oxygen sensor connections. Repair if necessary.
Check for the **+ 12 V feed** on **track A** of the upstream oxygen sensor connector with the ignition on. Using the Universal bornier, check the **insulation** and **continuity** on the following connection: Injection computer, connector **B, track M2** ⟶ **track A** of the upstream oxygen sensor Repair if necessary.
Disconnect the battery and the injection computer. Check the **cleanliness and condition** of the connections. Using the Universal bornier, check the **insulation** and **continuity** of the following connections: Injection computer, connector **C, track C1** ⟶ **track D** of the upstream oxygen sensor Injection computer, connector **C, track B1** ⟶ **track C** of the upstream oxygen sensor Injection computer, connector **C, track L2** ⟶ **track B** of the upstream oxygen sensor Repair if necessary.
Measure the heating **resistance** between **tracks A** and **B** of the upstream oxygen sensor. Replace the upstream oxygen sensor if the **resistance** is not approximately **9 Ω at 20 °C**.
Check **the condition** and **secure fitting** of the upstream oxygen sensor. If the vehicle is driven frequently in town, **decoke the engine**.

AFTER REPAIR	Repeat the conformity check from the start.

GETtheMANUALS.org

ET055 **CONTINUED**	

Check:
– the condition of the air filter,
– that the air inlet system is not blocked,
– the condition and conformity of the spark plugs,
– the sealing between the throttle valve and inlet manifold,
– the manifold pressure sensor sealing,
– the fuel vapour absorber bleed, which must not be jammed open,
– the fuel vapour absorber bleed system sealing,
– the brake servo system sealing,
– the turbocharger safety valve circuit sealing,
– the cylinder head oil vapour recovery system sealing,
– the sealing between the inlet manifold and cylinder head,
– the exhaust pipe sealing between the cylinder head and catalytic converter.
– the fuel flow rate and pressure.

If the idle speed is not stable, check:
– the timing adjustment,
– check the hydraulic tappets if there is camshaft noise (see **MR 395 Mechanics, 11A, top and front of engine**).
– the cylinder compressions.

Drive the vehicle to check the repair.
Repair the defective components.

AFTER REPAIR	Repeat the conformity check from the start.

GETtheMANUALS.org

ET056	DOUBLE RICHNESS LOOP

NOTES	There must be no present or stored faults.

Check the **cleanliness** and **condition** of the upstream oxygen sensor connections.
Repair if necessary.

Check for the **+ 12 V feed** on **track A** of the upstream oxygen sensor connector with the ignition on.
If **+ 12 V** is not present:
– disconnect the battery,
– check the **cleanliness** and **condition** of the connections,
Using the universal bornier, check the **continuity** on the following connection:
Injection computer, connector **B, track M2** ⟶ **track A** of the upstream oxygen sensor
Contact the Techline.

Disconnect the battery and the injection computer.
Check the **cleanliness and condition** of the connections.
Using the Universal bornier, check the **insulation** and **continuity** of the following connections:
Injection computer, connector **C, track C1** ⟶ **track D** of the upstream oxygen sensor
Injection computer, connector **C, track B1** ⟶ **track C** of the upstream oxygen sensor
Injection computer, connector **C, track L2** ⟶ **track B** of the upstream oxygen sensor
Repair if necessary.

Measure the heating **resistance** of the upstream oxygen sensor between **tracks A** and **B**.
Replace the sensor if the **resistance** is not around **9 Ω at 20 °C**.

Check **the condition** and **secure fitting** of the upstream oxygen sensor.
If the vehicle is driven frequently in town, **decoke the engine**.

AFTER REPAIR	Repeat the conformity check from the start.

GETtheMANUALS.org

ET056 **CONTINUED 1**	

Check the **cleanliness** and **condition** of the downstream oxygen sensor connections. Repair if necessary.
Check for the **+ 12 V feed** on track A of the downstream oxygen sensor connector with the ignition on. If **+ 12 V** is not present: – disconnect the battery, – check the **cleanliness** and **condition** of the connections, Using the universal bornier, check the **continuity** on the following connection:
Injection computer, connector **B, track M2** ⟶ **track A** of the downstream oxygen sensor Contact the Techline.
Disconnect the battery and the injection computer. Check the **cleanliness and condition** of the connections. Using the Universal bornier, check the **insulation** and **continuity** of the following connections:
Injection computer, connector **C, track B2** ⟶ **track D** of the upstream oxygen sensor Injection computer, connector **C, track A2** ⟶ **track C** of the upstream oxygen sensor Injection computer, connector **C, track L3** ⟶ **track B** of the upstream oxygen sensor Repair if necessary.
Measure the heating **resistance** of the downstream oxygen sensor between **tracks A** and **B**. Replace the sensor if the **resistance** is not around **9 Ω at 20 °C**.
Check **the condition** and for **secure fitting** of the downstream oxygen sensor. If the vehicle is driven frequently in town, **decoke the engine**.

AFTER REPAIR	Repeat the conformity check from the start.

GETtheMANUALS.org

ET056 **CONTINUED 2**	

Check:
– the condition of the air filter,
– that the air inlet system is not blocked,
– the condition and conformity of the spark plugs,
– the sealing between the throttle valve and inlet manifold,
– the manifold pressure sensor sealing,
– the fuel vapour absorber bleed, which must not be jammed open,
– the fuel vapour absorber bleed system sealing,
– the brake servo system sealing,
– the turbocharger safety valve circuit sealing,
– the cylinder head oil vapour recovery system sealing,
– the sealing between the inlet manifold and cylinder head,
– the exhaust pipe sealing between the cylinder head and catalytic converter.
– the fuel flow rate and pressure.

If the idle speed is not stable, check:
– the timing adjustment,
– check the hydraulic tappets if there is camshaft noise (see **MR 395 Mechanics, 11A, Top and front of engine**).
– the cylinder compressions.

Drive the vehicle to check the repair.
Repair the defective components.

AFTER REPAIR	Repeat the conformity check from the start.

GETtheMANUALS.org

ET062	FLYWHEEL SIGNAL

NOTES	There must be no present or stored faults.
	Information: if the flywheel has been replaced or removed, the flywheel target programming must be reinitialised.

Check **the mounting** and **positioning** of the TDC sensor (see **MR 395, Mechanics, 11A, Top and front of engine**).
Repair if necessary.

Check the **cleanliness** and **condition** of the TDC sensor and its connections.
Check the condition of the wire.
Repair if necessary.

Disconnect the battery and the injection computer.
Check the **cleanliness** and **condition** of the connections.
Using the Universal bornier, check the **insulation** and **continuity** of the following connections:
For F4R Turbo engine only:
Injection computer, connector **B, track E4** → **track 2** of the engine speed sensor
Injection computer, connector **B, track F3** → **track 1** of the engine speed sensor
For K4M and F4R engines only:
Injection computer, connector **B, track E4** → **track A** of the engine speed sensor
Injection computer, connector **B, track F3** → **track B** of the engine speed sensor
Repair if necessary.

Measure the **resistance** of the TDC sensor between **tracks 1** and **2 (F4R-Turbo only)** and between **tracks A** and **B (for K4M and F4R only)**.
Replace the TDC sensor if the **resistance** is not **200 to 270 Ω at 23 °C**.

If the sensor has been replaced, reset the flywheel signal programming.
Flywheel signal programming reinitialisation procedure:
Accelerate to **4000 rpm** in 3rd gear then decelerate to power take-up speed*.
Then repeat immediately.
(* This is the moment when, during deceleration with no load, the engine drops to idle speed and recovers torque.)
If the fault is still present, check **the cleanliness** and **condition** of the flywheel.

AFTER REPAIR	**If the TDC sensor has been replaced, reinitialise programming (RZ005).** Repeat the conformity check from the start.

GETtheMANUALS.org

ET564	DEFECT MODE TYPE 1

NOTES	There must be no present or stored faults.

This status covers faults that disable control of the motorised throttle valve.
This defect mode cuts off the throttle control (mechanical Limp Home position).

AFTER REPAIR	**If the TDC sensor has been replaced, reinitialise programming (RZ005).** Repeat the conformity check from the start.

GETtheMANUALS.org

ET565	TYPE 2 DEFECT MODE

NOTES	There must be no present or stored faults.

This status covers faults where the system has lost control of the air flow modulation. The associated defect mode limits the engine speed through injection cut-off.

AFTER REPAIR	**If the TDC sensor has been replaced, reinitialise programming (RZ005).** Repeat the conformity check from the start.

GETtheMANUALS.org

ET566	TYPE 3 DEFECT MODE

NOTES	There must be no present or stored faults.

This status covers faults indicating that the system no longer recognises the driver's demands, but still controls the air flow modulation (throttle servo control operational). It uses the pedal mode reconstructed by calibration.

AFTER REPAIR	**If the TDC sensor has been replaced, reinitialise programming (RZ005).** Repeat the conformity check from the start.

GETtheMANUALS.org

ET567	TYPE 4 DEFECT MODE

NOTES	There must be no present or stored faults.

This status covers faults affecting the monitoring system, or for which there is an emergency operating mode viable for the system (scenario of falling back on the second gang of a pedal or throttle potentiometer if there is a fault on the main gang).
Its effect is to restrict the throttle (limited performance).

AFTER REPAIR	**If the TDC sensor has been replaced, reinitialise programming (RZ005).** Repeat the conformity check from the start.

GETtheMANUALS.org

ET568	TYPE 5 DEFECT MODE

NOTES	There must be no present or stored faults.

This status covers faults affecting the control of the throttle by the torque structure. Its effect is to use the pedal feedback mode, instead of the permanent torque structure.

AFTER REPAIR	**If the TDC sensor has been replaced, reinitialise programming (RZ005).** Repeat the conformity check from the start.

GETtheMANUALS.org

ET569	DEFECT MODE TYPE 6

NOTES	There must be no present or stored faults.

This status covers faults affecting actuation of the turbocharging valve. The valve is no longer under servo control, and opens freely. The vehicle runs without turbocharging.

AFTER REPAIR	**If the TDC sensor has been replaced, reinitialise programming (RZ005).** Repeat the conformity check from the start.

GETtheMANUALS.org

Tool Parameter	Diagnostic tool title
PR001	Advance
PR014	Idling speed correction
PR015	Engine torque
PR018	Estimated air flow
PR030	Accelerator pedal position
PR035	Atmospheric pressure
PR041	Turbocharging pressure
PR058	Air temperature
PR064	Coolant temperature
PR074	Battery voltage
PR090	Idle speed regulation programming value
PR091	Theoretical idling speed OCR
PR093	Camshaft dephaser measured position
PR095	Anti-pinking correction
PR096	Motorised throttle upper stop programmed value
PR097	Motorised throttle lower stop programmed value
PR098	Upstream oxygen sensor voltage
PR099	Downstream oxygen sensor voltage
PR101	Duration of injection
PR102	Canister bleed solenoid valve OCR
PR103	Instantaneous fuel consumption
PR105	OBD fault warning light lit mileage counter
PR106	Mileage counter fault warning light lit
PR111	Motorised throttle position corrected value
PR112	No load programmed value

GETtheMANUALS.org

Tool Parameter	Diagnostic tool title
PR118	Measured throttle position gang 1
PR119	Measured throttle position gang 2
PR122	Torque received by the automatic transmission converter
PR123	Estimated driver demand engine torque
PR124	Resistant engine torque transmitted via multiplex line
PR126	Advance after anti-pinking correction
PR138	Richness correction
PR143	Self-adapting richness gain
PR144	Self-adapting richness offset
PR145	Engine speed
PR155	Vehicle speed
PR372	Number of active thermoplungers
PR421	Inlet manifold vacuum
PR444	Integral idling speed regulation correction
PR491	Measured pedal position
PR536	Idling regulation valve setpoint
PR568	Pedal position gang 1
PR569	Pedal position gang 2
PR745	Camshaft dephaser position setpoint
PR876	Camshaft dephaser solenoid valve control OCR

GETtheMANUALS.org

PR030	ACCELERATOR PEDAL POSITION

NOTES	There must be no present or stored faults.

Check that the pedal mechanism has not seized.
Check the **cleanliness** and **condition** of the pedal potentiometer connections.
Repair if necessary.

Disconnect the battery and the injection computer.
Check the **cleanliness** and **condition** of the connections.
Using the Universal bornier, check the **insulation** and **continuity** of the following connections:

- Injection computer, connector **A, track H3** → **track 2** of the pedal potentiometer
- Injection computer, connector **A, track G2** → **track 4** of the pedal potentiometer
- Injection computer, connector **A, track H2** → **track 3** of the pedal potentiometer
- Injection computer, connector **A, track F4** → **track 1** of the pedal potentiometer
- Injection computer, connector **A, track F2** → **track 5** of the pedal potentiometer
- Injection computer, connector **A, track F3** → **track 6** of the pedal potentiometer

Repair if necessary.

If the fault is still present, replace the pedal potentiometer.

AFTER REPAIR	Repeat the conformity check from the start.

GETtheMANUALS.org

PR074	BATTERY VOLTAGE

NOTES	There must be no present or stored faults. **No electrical consumers**.

Ignition on	**If the voltage is at minimum:** Check the battery and the charge circuit (see **MR 395 Mechanics, 16A, Starting - charging**). **If the voltage is at maximum:** Check that the charging voltage is correct with and without electrical consumers on (see **MR 395 Repair, 16A, Starting - charging**).
At idle speed	**If the voltage is at minimum:** Check the battery and the charge circuit (see **MR 395 Mechanics, 16A, Starting - charging**). **If the voltage is at maximum:** Check that the charging voltage is correct with and without electrical consumers on (see **MR 395 Repair, 16A, Starting - charging**).

AFTER REPAIR	Repeat the conformity check from the start.

GETtheMANUALS.org

PR095	ANTI-PINKING CORRECTION

NOTES	There must be no present or stored faults.

The pinking sensor must not supply a zero signal, proving that it is recording the mechanical vibrations of the engine.
Check that there is the **correct** fuel in the fuel tank. Repair if necessary.
Check the **condition** and **conformity** of the spark plugs. Repair if necessary.
Check the pinking sensor **tightness**. Repair if necessary.
Check the **cleanliness** and **condition** of the pinking sensor connectors. Repair if necessary.
Disconnect the battery and the injection computer. Check the **cleanliness** and **condition** of the connections. Using the Universal bornier, check the **insulation** and **continuity** of the following connections: Injection computer, connector **B, track B3** → **track 2** of the pinking sensor Injection computer, connector **B, track B4** → **track 1** of the pinking sensor Injection computer, connector **B, track B2** → **Pinking sensor screening** Repair if necessary.
If the fault is still present, replace the pinking sensor.

AFTER REPAIR	Repeat the conformity check from the start.

GETtheMANUALS.org

PR098	UPSTREAM OXYGEN SENSOR VOLTAGE

NOTES	There must be no present or stored faults.

Check the **cleanliness** and **condition** of the upstream oxygen sensor connections. Repair if necessary.
Disconnect the battery and the injection computer. Check the **cleanliness** and **condition** of the connections. Using the Universal bornier, check the **insulation** and **continuity** of the following connections: Injection computer, connector **C, track C1** ⟶ **track D** of the upstream oxygen sensor Injection computer, connector **C, track B1** ⟶ **track C** of the upstream oxygen sensor Repair if necessary.
Check **the tightness** of the upstream oxygen sensor. Repair if necessary.
If the vehicle is driven frequently in town, **decoke the engine**.
Check that **there are no leaks** in the exhaust system, from the manifold to the catalytic converter. Repair if necessary.

AFTER REPAIR	Repeat the conformity check from the start.

GETtheMANUALS.org

PR098 **CONTINUED**	

If the fault is still present, replace the upstream oxygen sensor.
If the fault has still not been cured, continue with the checks.

Check:
– the condition of the air filter,
– that the air inlet system is not blocked,
– the condition and conformity of the spark plugs,
– that the catalytic converter is not clogged,
– the sealing between the throttle valve and inlet manifold,
– the manifold pressure sensor sealing,
– the fuel vapour absorber bleed, which must not be jammed open,
– the fuel vapour absorber bleed system sealing,
– the brake servo system sealing,
– the cylinder head oil vapour recovery system sealing,
– the sealing between the inlet manifold and cylinder head,
– the exhaust pipe sealing between the cylinder head and catalytic converter.
– the fuel flow rate and pressure.

If the idle speed is not stable, check:
– the timing adjustment,
– the hydraulic tappets if there is camshaft noise (see **MR 395 Mechanics, 11A, Top and front of engine**),
– the cylinder compressions.
Drive the vehicle to check the repair.

AFTER REPAIR	Repeat the conformity check from the start.

GETtheMANUALS.org

PR099	DOWNSTREAM OXYGEN SENSOR VOLTAGE

NOTES	There must be no present or stored faults.

Check the **cleanliness** and **condition** of the downstream oxygen sensor connections. Repair if necessary.
Disconnect the battery and the injection computer. Using the Universal bornier, check the **insulation** and **continuity** of the following connections: Injection computer, connector **C, track A2** ⟶ **track C** of the downstream oxygen sensor Injection computer, connector **C, track B2** ⟶ **track D** of the downstream oxygen sensor Repair if necessary.
Check **the tightness** of the downstream oxygen sensor. Repair if necessary.
If the vehicle is driven frequently in town, **carry out the unclogging procedure** (oxygen sensors and catalytic converter clogging).
Check that the exhaust pipe is completely **leak free**. Repair if necessary.
Replace the downstream oxygen sensor.
If the fault is still present, the catalytic converter is certainly damaged.
If the catalytic converter is faulty, the cause must be determined, otherwise the new catalytic converter may be damaged in turn.
Remove the catalytic converter.

AFTER REPAIR	Repeat the conformity check from the start.

GETtheMANUALS.org

PR099 **CONTINUED**	

Various things may destroy a catalytic converter:
- **deformation** (impact),
- **thermal shock** (cold water splashed onto a hot catalytic converter can damage it),
- **defective injector or ignition:** the catalytic converter is damaged by contact with fuel (coil fault, coil control fault, injector jammed open),
- **injector leak,**
- **abnormal oil or coolant consumption** (defective cylinder head gasket),
- **use of a fuel additive** or other equivalent product (obtain information from the customer because this type of product can contaminate the catalytic converter and render it useless sooner or later).

Look up the service history of the vehicle or, if this is not possible, ask the customer if the vehicle has had injection or ignition faults.

If the cause of the catalytic converter damage has been found and the fault has disappeared, replace the catalytic converter.

AFTER REPAIR	Repeat the conformity check from the start.

GETtheMANUALS.org

PR421	MANIFOLD PRESSURE

NOTES	There must be no present or stored faults.

Check the **cleanliness** and **condition** of the manifold pressure sensor and its connections.
Repair if necessary.

Disconnect the battery and the injection computer.
Check the **cleanliness** and **condition** of the connections.
Using the Universal bornier, check the **insulation** and **continuity** of the following connections:

For F4R Turbo engine only:

Injection computer, connector **B, track H2** → **track 1** of the manifold pressure sensor.
Injection computer, connector **B, track H3** → **track 3** of the manifold pressure sensor
Injection computer, connector **B, track H4** → **track 2** of the manifold pressure sensor

For K4M and F4R engines only:

Injection computer, connector **B, track H2** → **track C** of the manifold pressure sensor
Injection computer, connector **B, track H3** → **track B** of the manifold pressure sensor
Injection computer, connector **B, track H4** → **track A** of the manifold pressure sensor

Repair if necessary.

If the fault is still present, replace the manifold pressure sensor.

If the fault is still present, carry out the following checks:
The inlet line must be perfectly sealed, from the throttle valve to the cylinder head.

Check:
– the condition of the air filter,
– that the air inlet system is not blocked,
– the sealing between the throttle valve and inlet manifold,
– the manifold pressure sensor sealing,
– the fuel vapour absorber bleed, which must not be jammed open,
– the fuel vapour absorber bleed system sealing,
– the brake servo system sealing,
– the turbocharger safety valve circuit sealing,
– the cylinder head oil vapour recovery system sealing,
– the sealing between the inlet manifold and cylinder head,
– the exhaust pipe sealing between the cylinder head and catalytic converter.

Repair if necessary.

AFTER REPAIR	Repeat the conformity check from the start.

GETtheMANUALS.org

Tool Command	Diagnostic tool title
SC006	Start OBD test: catalytic converter
SC007	Start OBD test: O_2 sensors
RZ005	Programming
RZ007	Fault memory
AC015	Fuel pump relay
AC017	Canister bleed solenoid valve
AC018	Upstream O_2 sensor heating
AC019	Downstream O_2 sensor heating
AC027	Motorised throttle
AC038	Low speed GMV relay
AC039	High speed GMV relay
VP020	Enter VIN

GETtheMANUALS.org

AC015	FUEL PUMP RELAY

NOTES	There must be no present or stored faults.
	Special note When running the command, the instrument panel information display shows **OIL PRESSURE FAULT**. Disregard this message and do not deal with any fault (only in the present case where you are running an injection actuator command: expected system effect).

IF THE RELAY DOES NOT CLICK	Disconnect the battery and the injection computer. Check the **cleanliness** and **condition** of the computer connections. Using the Universal bornier, check the **insulation** and **continuity** on the following connection: Injection computer, connector **C, track D1** ⟶ **track 2** of the petrol pump relay Repair if necessary.
	If the fault is still present, contact the Techline.

AFTER REPAIR	Repeat the conformity check from the start.

GETtheMANUALS.org

AC015 **CONTINUED**	

IF THE PUMP DOES NOT OPERATE	Disconnect the fuel pump. Check the **cleanliness** and **condition** of the connections. With the ignition on, check for **+ 12 V** on **track 1** of the fuel pump relay. If there is no **+ 12 V feed**, check using the Universal bornier for **continuity** on the following connections: Fuel pump relay **track 5** ⟶ **track 3** of the petrol pump cut-off relay Fuel pump cut-off relay **track 4** ⟶ **track C1** of the petrol pump If the fault is still present, check **the condition** of intermediate connector **R262**. Repair if necessary.
	If, with the ignition on, there is still not **+ 12 V** on the petrol pump relay connector, check fuse **F8 (10A)** of the petrol pump relay.
	Check for **earth** on **track C2** of the fuel pump. Repair if necessary.
	If the fault is still present, replace the fuel pump.

AFTER REPAIR	Repeat the conformity check from the start.

GETtheMANUALS.org

AC017	CANISTER BLEED SOLENOID VALVE

NOTES	There must be no present or stored faults.
	Special note When running the command, the instrument panel information display shows **OIL PRESSURE FAULT**. Disregard this message and do not deal with any fault (only in the present case where you are running an injection actuator command: expected system effect).

Check the **cleanliness** and **condition** of the fuel vapour absorber bleed solenoid valve connections.
Repair if necessary.

Measure the **resistance** of the petrol vapour absorber bleed solenoid valve.
Replace the petrol vapour absorber bleed solenoid valve if the **resistance** is not **26 Ω ± 4 Ω at 23 °C**.

Check for **+ 12 V feed** on **track 1** of the fuel vapour absorber bleed solenoid valve with the ignition on.
If **+ 12 V** is not present:
– using the Universal bornier, check for **continuity** on the following connections:
Fuel computer, connector **B, track M2** → **track 1** of the petrol vapour absorber bleed solenoid valve
Main relay **track 5** → **track 1** of the petrol vapour absorber bleed solenoid valve
Repair if necessary.

Disconnect the battery.
Disconnect the computer. Check the **cleanliness** and **condition** of the connections.
Using the Universal bornier, check the **insulation** and **continuity** of the following connection:
Fuel computer, connector **C, track F2** → **track 2** of the petrol vapour absorber bleed solenoid valve
Repair if necessary.

If the fault is still present, replace the solenoid valve.

AFTER REPAIR	Repeat the conformity check from the start.

GETtheMANUALS.org

AC027	MOTORISED THROTTLE

WARNING
Never drive the vehicle without checking first that there are no throttle valve faults.

NOTES	There must be no present or stored faults.
	Special note When running the command, the instrument panel information display shows **OIL PRESSURE FAULT**. Disregard this message and do not deal with any fault (only in the present case where you are running an injection actuator command: expected system effect).

Switch on the ignition and run command **AC027 Motorised throttle**.
If the motorised throttle does not work, apply the interpretation for **DF079 Motorised throttle valve automatic control**.

AFTER REPAIR	Repeat the conformity check from the start.

GETtheMANUALS.org

AC038	LOW SPEED GMV RELAY

NOTES	Coolant temperature with engine switched off > **100 ˚C** Air conditioning requested and authorised Coolant temperature with engine running > **99 ˚C** **Special note** When running the command, the instrument panel information display shows **OIL PRESSURE FAULT**. Disregard this message and do not deal with any fault (only in the present case where you are running an injection actuator command: expected system effect).

Check the **connection and condition** of the low-speed fan unit relay connector. Repair if necessary.
Disconnect the relay. Check for **+ 12 V** on **track 3** of the low-speed fan assembly relay connector. Repair if necessary.
Disconnect the relay. With the ignition on, check for **+ 12 volts** on **track 1** of the low-speed fan unit relay. If there is no **+ 12 V** feed, using the universal bornier, check the **continuity** of the following connections: Injection computer, connector **B, track M2** → **track 1** of the low-speed fan unit relay Main relay **track 5** → Repair if necessary.
Check the **insulation and continuity** of the connection between: Injection computer, connection **C, track G2** → **track 2** of the low-speed fan unit relay Repair if necessary.
Reconnect the relay. Check for **+ 12 V** on **track 5** of the high-speed fan unit relay connector when command **AC038 Low speed fan unit relay** is run. Replace the relay if necessary.
If the fault is still present, check (with the ignition on), for an **earth** on **track 2** of the low speed fan unit relay. If, with the ignition on, the computer does not control the high speed fan unit relay on **track 2** through an earth, contact your Techline.

AFTER REPAIR	Repeat the conformity check from the start.

GETtheMANUALS.org

AC039	HIGH SPEED GMV RELAY

NOTES	Air conditioning pressure > **24 bar** Air conditioning pressure > **18 bar** + vehicle speed > **12 mph (20 km/h)** Coolant temperature with engine running > **102 ˚C**
	Special note When running the command, the instrument panel information display shows **OIL PRESSURE FAULT**. Disregard this message and do not deal with any fault (only in the present case where you are running an injection actuator command: expected system effect).

Check **the connection and condition** of the high-speed fan unit relay connector.
Repair if necessary.

Disconnect the relay.
Check for **+ 12 V** on **track 3** of the high-speed fan assembly relay connector.
Repair if necessary.

Disconnect the relay.
With the ignition on, check for **+ 12 V** on **track 1** of the high-speed fan unit relay.
If there is no **+ 12 V** feed, using the universal bornier, check the **continuity** of the following connections:
Injection computer, connector **B, track M2** → **track 1** of the high-speed fan unit relay
Main relay **track 5** →
Repair if necessary.

Check the **insulation and continuity** of the connection between:
Injection computer, connector **C, track J2** → **track 2** of the high speed fan unit relay
Repair if necessary.

Reconnect the relay.
Check for **+ 12 V** on **track 5** of the high-speed fan unit relay connector when command **AC039 High speed fan unit relay** is run.
Replace the relay if necessary.

If the fault is still present, check (with the ignition on), for an **earth** on **track 2** of the high speed fan unit relay.
If, with the ignition on, the computer does not control the high speed fan unit relay on **track 2** through an earth, contact your Techline.

AFTER REPAIR	Repeat the conformity check from the start.

GETtheMANUALS.org

NOTES	**Only consult the customer complaints after performing a complete check with the diagnostic tool.** **WARNING** **Never drive the vehicle without checking first that there are no throttle valve faults.**

NO DIALOGUE WITH THE COMPUTER — **ALP 1**

THE ENGINE WILL NOT START — **ALP 2**

IDLING SPEED FAULTS — **ALP 3**

FAULTS WHILE DRIVING — **ALP 4**

GETtheMANUALS.org

ALP 1	No dialogue with the computer

NOTES	None

Test the diagnostic tool on another vehicle in perfect working order.
Check that the sensor's green indicator light comes on.
If you cannot establish dialogue with the second vehicle, follow the instructions in the **CLIP diagnostic tool check** section.
If you establish dialogue with the second vehicle, follow the instructions in the **Vehicle check** section.

CLIP DIAGNOSTIC TOOL CHECK	Check the **cleanliness** and **condition** of the diagnostic socket contacts which connect to the vehicle. Check the **condition** of the cable from the diagnostic socket to the sensor, and the cleanliness and condition of the connections. Check the sensor connections. Check the **condition** of the cable from the sensor to the CLIP tool, and the cleanliness and condition of the connections. Check the **cleanliness** and **condition** of the CLIP socket. If the fault is still present, contact the Techline.
CHECK ON THE VEHICLE	Check the **electrical voltage** of the battery. Check the **cleanliness** and **condition** of the battery terminals. Check the **condition** and **tightness** of the cable going from the battery + terminal to the Protection and Switching Unit. Check the **condition** of the battery earth cable and ensure that there is a **good electrical connection** with the bodywork.
	Check the injection computer earth terminal for **cleanliness** and make sure it is **properly connected** to the bodywork.
	Check the after ignition feed **30 A fuse** for the injection computer, and **the condition** and **cleanliness** of the contacts. (Continued on next page.)

AFTER REPAIR	Repeat the conformity check from the start.

GETtheMANUALS.org

ALP 1 CONTINUED 1	

CHECKING ON THE VEHICLE (CONTINUED 1)

Using the Universal bornier, check the following tracks on the **vehicle's diagnostic socket**:

Track 1 → **+ After ignition feed**
Track 16 → **+ Battery feed**
Tracks 4 and 5 → **Earth**

Repair if necessary.

Disconnect the battery and the petrol computer.
Check the **cleanliness** and **condition** of the computer connections.
Using the Universal bornier, check the **continuity** of the **multiplex line** communication lines:

Fuel computer, connector **A, track A4** → **track 6** Vehicle diagnostic socket
Fuel computer, connector **A, track A3** → **track 14** Vehicle diagnostic socket

If the fault is still present, check **the condition** of intermediate connector **R262**.
Repair if necessary.

Check the **continuity** of the **K** communication line:

Petrol computer, connector **A, track B4** → **track 7** of the vehicle diagnostic socket

If the fault is still present, check **the condition** of the intermediate connector (**R262**).
Repair if necessary.

Disconnect the computer **earth** terminal connection from the negative battery terminal.
Check the **continuity** and **insulation** of the following tracks:

Fuel computer, connector **C, track L1** → **Earth terminal**
Fuel computer, connector **C, track M1** → **Earth terminal**
Fuel computer, connector **B, track M1** → **Earth terminal**
Fuel computer, connector **B, track L1** → **Earth terminal**

Repair if necessary.

AFTER REPAIR	Repeat the conformity check from the start.

GETtheMANUALS.org

ALP 1 **CONTINUED 2**	

CLIP VEHICLE CHECK (CONTINUED 2)	Using the Universal bornier, check for **insulation** and **continuity** on the following connection: Computer, connector **B, track D4** ⟶ t**rack 2** of the main relay Repair if necessary.
	Using the Universal bornier, check for **continuity** on the following connection: Computer, connector **B, track M2** ⟶ t**rack 5** of the main relay Repair if necessary.
	Check the condition and operation of fuse **F6 (10A)**. Using the Universal bornier, check for **continuity** on the following connection: Computer, connector **A, track D1** ⟶ t**rack 8** of the fuse box Fuse box **track 8** ⟶ **track 1** of the petrol pump relay Repair if necessary.
	If the fault is still present, contact the Techline.

AFTER REPAIR	Repeat the conformity check from the start.

GETtheMANUALS.org

ALP 2	The engine will not start

NOTES	**Follow ALP 2 after a complete check with the diagnostic tool.** *(Use the relevant section in the Workshop Repair Manual to carry out certain operations).*
	WARNING **Never drive the vehicle without ensuring that there are no throttle valve faults**

If the starter motor does not operate, there may be a fault with the engine immobiliser. Carry out fault finding on the UCH (see **87G, Connection Unit**).
Check the condition of the battery. Check the cleanliness, condition and tightness of the battery terminals. Check that the battery is correctly earthed to the vehicle bodywork. Check that the + battery leads are correctly connected.
Check that the starter motor is properly connected. Check that the starter works (see **Workshop Repair Manual 395 Mechanics, 16A, Starting-charging**).
Check the condition and conformity of the spark plugs. Check the mounting, cleanliness and condition of the flywheel signal sensor. Check the flywheel signal sensor air gap. Check the condition of the flywheel.
Check that the air filter is not clogged. Check that the air inlet system is not blocked.
Check that there is fuel in the tank (fuel sender fault). Check that the tank vent is not blocked. Check that the fuel is of the correct type. Check that there are no leaks in the fuel system, from the tank to the injectors. Check that there are no kinked hoses (especially after a removal operation). Check the fuel flow rate and pressure. Check the sealing of the injectors, and that they are working properly.
Check that the exhaust system is not blocked and the catalytic converter not clogged.
Check the timing setting.
Check the cylinder compressions.
Check the hydraulic tappets if there is camshaft noise.

AFTER REPAIR	Repeat the conformity check from the start.

GETtheMANUALS.org

ALP 3	Idle speed faults

NOTES	**Fill in ALP 3 after a complete check using the diagnostic tool.** *(Use the relevant section in the Workshop Repair Manual to carry out certain operations).*
	WARNING **Never drive the vehicle without checking first that there are no throttle valve faults.**

Check that the oil level is not too high.
Check the inlet system sealing, from the throttle to the cylinder head. Check that the fuel vapour absorber bleed is not disconnected or jammed open. Check that there are no leaks in the fuel vapour absorber bleed system. Check that there are no leaks in the braking assistance system. Check that there are no leaks in the oil vapour recovery system (manifold/cylinder head). Check that there are no leaks around the manifold pressure sensor. Check that there are no leaks around the air temperature sensor.
Check that the air filter is not clogged. Check that the air inlet system is not blocked. Check that throttle valve is not clogged.
Check the condition of the pencil coils and the cleanliness of their connections. Check the electrical resistance of the pencil coil secondary circuits. Check the condition and conformity of the spark plugs. Check the mounting, cleanliness and condition of the flywheel signal sensor. Check the flywheel signal sensor air gap. Check the condition and cleanliness of the flywheel.
Check that the tank vent is not blocked. Check that the fuel is of the correct type. Check that there are no leaks in the fuel system, from the tank to the injectors. Check that there are no kinked hoses (especially after a removal operation). Check the fuel flow rate and pressure. Check that the injectors are working properly.
Check that the exhaust system is not blocked and the catalytic converter not clogged.
Check the timing setting.
Check the cylinder compressions.
Check the hydraulic tappets if there is camshaft noise.

AFTER REPAIR	Repeat the conformity check from the start.

GETtheMANUALS.org

ALP 4	Faults occurring while driving

NOTES	**Fill in ALP 4 after a complete check using the diagnostic tool.** *(Use the relevant section in the Workshop Repair Manual to carry out certain operations).*
	WARNING **Never drive the vehicle without checking first that there are no throttle valve faults.**

Check that the oil level is not too high.
Check the condition of the pencil coils and the cleanliness of their connections. Check the electrical resistance of the pencil coil secondary circuits. Check the condition and conformity of the spark plugs. Check the mounting, cleanliness and condition of the flywheel signal sensor. Check the flywheel signal sensor air gap. Check the condition and cleanliness of the flywheel.
Check that the air filter is not clogged. Check that the air inlet system is not blocked. Check that throttle valve is not clogged. Check the inlet system sealing, from the throttle to the cylinder head.
Check that the fuel vapour absorber bleed is not disconnected or jammed open. Check that there are no leaks in the fuel vapour absorber bleed system. Check that there are no leaks in the braking assistance system. Check that there are no leaks in the oil vapour recovery system (manifold/cylinder head). Check that there are no leaks around the manifold pressure sensor. Check that there are no leaks around the air temperature sensor.
Check that the tank vent is not blocked. Check that the fuel is of the correct type. Check that there are no leaks in the fuel system, from the tank to the injectors. Check that there are no kinked hoses (especially after a removal operation). Check the fuel flow rate and pressure. Check that the injectors are working properly.
Check that the exhaust system is not blocked and the catalytic converter not clogged.
Check the timing setting.
Check the cylinder compressions.
Check the hydraulic tappets if there is camshaft noise.

AFTER REPAIR	Repeat the conformity check from the start.

GETtheMANUALS.org

VEL SATIS

1 Engine and peripherals

17B PETROL INJECTION

EWR 20 INJECTION
Program No.: 61
Vdiag No.: 04, 08, 0C, 10

Fault finding - Introduction	17B - 2
Fault finding - System operation	17B - 7
Fault finding - Allocation of computer tracks	17B - 9
Fault finding - Replacement of components	17B - 15
Fault finding - Fault summary table	17B - 17
Fault finding - Interpretation of faults	17B - 20
Fault finding - Conformity check	17B - 89
Fault finding - Status summary table	17B - 103
Fault finding - Interpretation of statuses	17B - 105
Fault finding - Parameter summary table	17B - 114
Fault finding - Command summary table	17B - 116
Fault finding - Interpretation of commands	17B - 117
Fault finding - Customer complaints	17B - 118
Fault finding - Fault finding charts	17B - 119

V8 **Edition Anglaise**

"The repair procedures given by the manufacturer in this document are based on the technical specifications current when it was prepared.

The procedures may be modified as a result of changes introduced by the manufacturer in the production of the various component units and accessories from which his vehicles are constructed."

All rights reserved by Renault s.a.s.

Copying or translating, in part or in full, of this document or use of the service part reference numbering system is forbidden without the prior written authority of Renault s.a.s.

© Renault s.a.s. 2008

GETtheMANUALS.org

1. SCOPE OF THIS DOCUMENT

This document presents the fault finding procedure applicable to all computers with the following specifications:

Vehicles: **Espace IV phase 1 / phase 2**
Velsatis phase 1 / phase 2

Engines concerned: **V4Y 701, 711 and 715**

Function concerned: **Petrol injection**

Name of computer: **EWR 20 injection**

Program No.: **61**

Vdiag No.: **04, 08, 0C, 10**

2. PREREQUISITES FOR FAULT FINDING

Documentation type

Fault finding procedures (this manual):
– Assisted fault finding (integrated into the diagnostic tool), Dialogys.

Wiring Diagrams:
– Visu-Schema (CD-ROM).

Type of diagnostic tools
– **CLIP + sensor**

Special tooling required

Special tooling required	
	Multimeter
Elé. 1681	Universal bornier

3. RECAP

Procedure

To save energy, the UCH of the vehicle interrupts the + after ignition feed after 3 minutes.

When performing fault finding on a computer, it is possible to force the + after ignition feed for 1 hour by applying the following procedure:
– Press the card unlocking button,
– insert the card in the reader,
– press the Start button (interrupting the timed + after ignition feed mode),
– press and hold the Start button for over 5 seconds until the engine immobiliser warning light starts to flash rapidly (4 Hz).

This forced + after ignition feed mode remains active for 1 hour.
– Pressing the Start button or removing the card from the reader cuts off the forced + after ignition feed but does not cut off the timed forced + after ignition feed mode. As long as one hour has not elapsed the + after ignition feed function restarts the forced + after ignition feed for the remaining time.

GETtheMANUALS.org

Faults

Faults are declared as either present or stored (depending on whether they appeared in a certain context and have disappeared since, or whether they remain present but have not been diagnosed within the current context).

The **present** or **stored** status of faults should be taken into consideration when the diagnostic tool is switched on after the + after ignition feed (without any system components being active).

For a **present fault**, apply the procedure described in the **Interpretation of faults** section.

For a **stored fault**, note the faults displayed and apply the instructions in the **Notes** section.

If the fault is **confirmed** when the instructions in the Notes section are applied, the fault is present. Deal with the fault

If the fault is **not confirmed**, check:
- the electrical lines which correspond to the fault,
- the connectors for these lines (for oxidation, bent pins, etc.),
- the resistance of the component detected as faulty,
- the condition of the wires (melted or split insulation, wear).

Conformity check

The aim of the conformity check is to check data that does not produce a fault on the diagnostic tool because the data is inconsistent. Therefore, this stage is used to:
- carry out fault finding on faults that do not have a fault display, and which may correspond to a customer complaint.
- check that the system is operating correctly and that there is no risk of a fault recurring after repairs.

This section gives the fault finding procedures for statuses and parameters and the conditions for checking them.

If a status is not behaving normally or a parameter is outside the permitted tolerance values, consult the corresponding fault finding page.

Customer complaints - Fault finding chart

If the test with the diagnostic tool is OK but the customer complaint is still present, the fault should be processed by **customer complaint**.

A synopsis of the general procedure to follow is provided on the following page in the form of a flow chart.

GETtheMANUALS.org

4. FAULT FINDING PROCEDURE

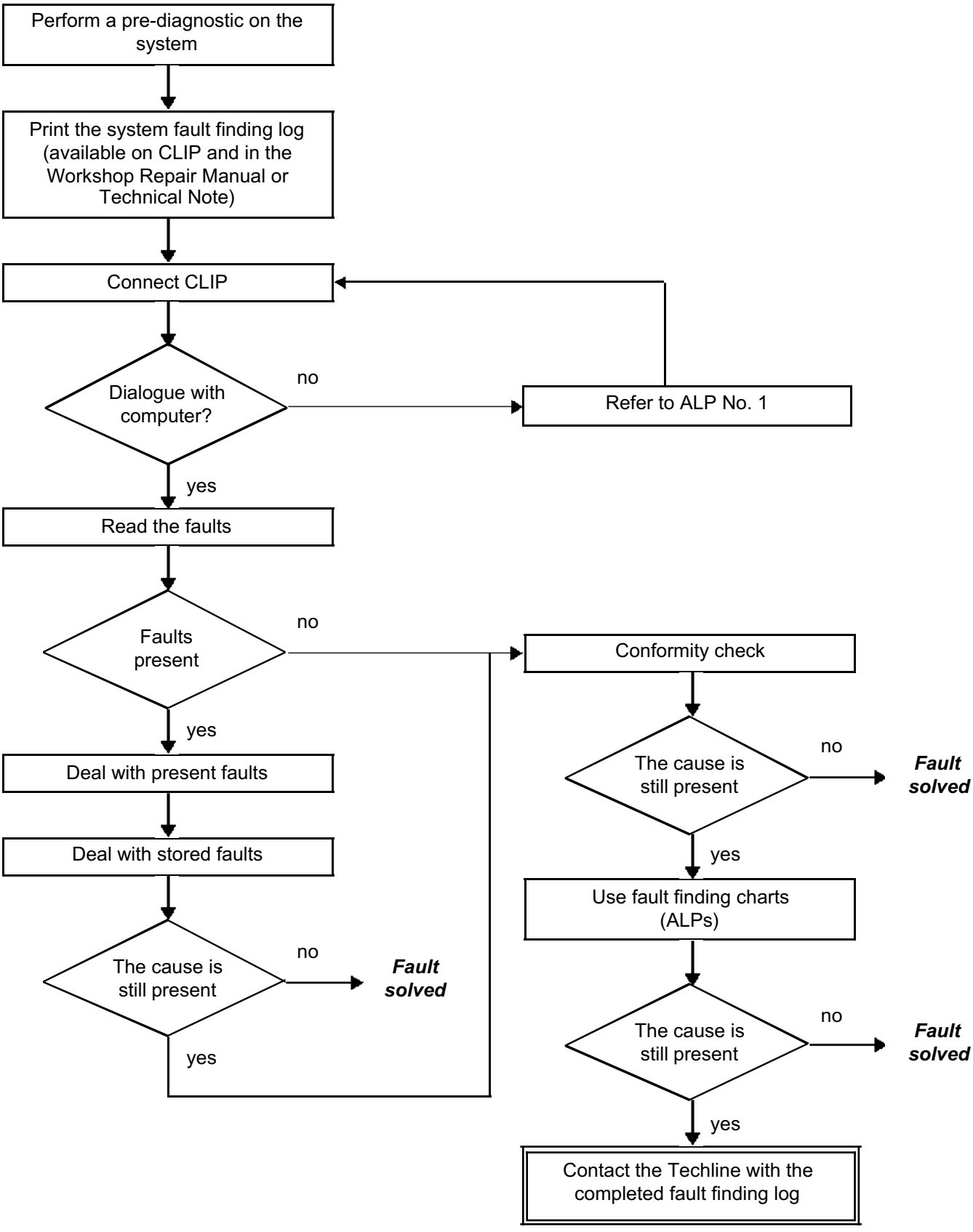

GETtheMANUALS.org

4. FAULT FINDING PROCEDURE (continued)

Wiring check

Fault finding problems
Disconnecting the connectors and/or manipulating the wiring harness may temporarily remove the cause of a fault.
Electrical measurements of voltage, resistance and insulation are generally correct, especially if the fault is not present when the analysis is made (stored fault).

Visual inspection
Look for damage under the bonnet and in the passenger compartment.
Carefully check the fuses, insulators and wiring harness routing.
Look for signs of oxidation.

Physical inspection
While manipulating the wiring harness, use the diagnostic tool to note any change in fault status from stored to present.
Make sure that the connectors are properly locked.
Apply light pressure to the connectors.
Twist the wiring harness.
If there is a change in status, try to locate the source of the fault.

Inspection of each component
Disconnect the connectors and check the appearance of the clips and tabs, as well as the crimping (no crimping on the insulating section).
Make sure that the clips and tabs are properly locked in the sockets.
Check that no clips or tabs have been dislodged during connection.
Check the clip contact pressure using an appropriate model of tab.

Resistance check
Check the continuity of entire lines, then section by section.
Look for a short circuit to earth, to **+ 12 V** or to another wire.

If a fault is detected, repair or replace the wiring harness.

GETtheMANUALS.org

5. FAULT FINDING LOG

IMPORTANT

IMPORTANT
Any fault on a complex system requires thorough fault finding with the appropriate tools. The FAULT FINDING LOG, which should be completed during the procedure, enables you to keep track of the procedure which is carried out. It is an essential document when consulting the manufacturer.

IT IS THEREFORE MANDATORY TO FILL OUT A FAULT FINDING LOG EACH TIME FAULT FINDING IS CARRIED OUT.

You will always be asked for this log:

- when requesting technical assistance from Techline,
- for approval requests when replacing parts for which approval is mandatory,
- to be attached to monitored parts for which reimbursement is requested. The log is needed for warranty reimbursement, and enables better analysis of the parts removed.

6. SAFETY ADVICE

Safety rules must be observed during any work on a component to prevent any damage or injury:

- check the battery voltage to avoid incorrect operation of computer functions,
- use the proper tools.

GETtheMANUALS.org

V4Y injection system details:

IMPORTANT
A computer is matched to the engine and the vehicle on which it is installed. It is prohibited to try a computer on another vehicle then return it to the original vehicle.

1. Motorised throttle valve

1.1 General

In the motorised throttle valve system there are no adjustments between the acquisition of the real value with the potentiometers, and the mechanical position of the throttle valve. An adjustment must therefore be made in the injection computer.
During this operation, the position of the lower mechanical stop and the **stand-by throttle position are programmed**, and the potentiometer amplifier is balanced.
The programmed values are stored in the computer memory. The sequence of **programming the end stops** and **storing programmed values** equates to **initialising** the motorised throttle valve. The springs of the motorised throttle are also tested.
The above initialisation process runs automatically and independently when the ignition is switched on, but only under certain initial conditions. It may also run several times when the ignition is on.

1.2 Throttle programming procedure

Programming should be performed at least once correctly during the vehicle life cycle, that is, when switching on for the first time (original initialisation), and then **each time either the computer or the motorised throttle valve is replaced**. After the throttle valve is replaced and before reprogramming, the **programming must be cleared**.
Switch on the ignition for approximately **30 seconds**, then switch off and wait for the end of power-latch.
Switch the ignition on again, start the engine and check that the engine responds correctly to movements of the accelerator pedal.

2. Warning light management

Management of the operation of warning lights and injection information is incorporated in the instrument panel.
In the event of a fault, refer to section **83A, Instrument panel**.
– The OBD (On Board Diagnostic) warning light (orange engine icon) signals that the pollution threshold has been exceeded.

Each time the ignition is switched on, the OBD warning light comes on to permit a visual inspection. This light goes out **3 seconds** after starting the engine.
In normal operation, if the warning light is lit continuously, the injection system is exceeding the pollution threshold due to an OBD fault (misfiring, ageing of the oxygen sensors or a fault on the fuel supply) or an electrical fault leading to an OBD fault (injector, coil, etc.). Flashing of this warning light signifies a risk of catalytic converter damage.

GETtheMANUALS.org

3. Climate control computer - injection computer connection

The injection computer is connected to the CLIMATE CONTROL computer via the multiplex link:
When the **CLIMATE CONTROL** switch is turned on, the CLIMATE CONTROL computer requests compressor operation.
The injection computer authorises or inhibits the compressor clutch and if necessary imposes a fast idle speed which increases in increments of **50 rpm**.

Compressor operation programming

During certain operating phases, the injection computer disables the compressor:
– for 3 seconds after the engine has been started, if the throttle position is more than approximately 67˚ (acceleration at a value below 54˚), for 5 seconds if use is made of the power assisted steering at the same moment as the demand for climate control, if the coolant temperature is more than **115 ˚C** and if the engine speed is above **5400 rpm** (acceleration at an engine speed below **4900 rpm**).

GETtheMANUALS.org

Connector A (81 track)

Computer track	Description	Sensor - actuator track
A1	Throttle motor + control	Track 6 of the motorised throttle 6-track VE connector
A2	Not used	
A3	Throttle motor - control	Track 3 of the motorised throttle 6-track VE connector
A4	Earth	Earth
A5	+ throttle motor relay supply	Track 38 of the throttle motor safety relay 5-track NO connector
A6	Not used	
A7	Variable inlet solenoid valve control	Track 2 of the variable inlet solenoid valve 2-track NO connector
A8	Not used	
A9	+ after ignition feed	Engine fuse and relay box
A10	Not used	
A11	Signal + brake pedal switch (brake light signal switch open)	Track 3 of the brake light switch 4-track CY connector
A12	CAN H	Track 6 diagnostic socket
A13	CAN L	Track 14 diagnostic socket
A14	Line K fault finding signal	Track 7 diagnostic socket
A15	Coolant temperature sensor earth	Track 2 of the coolant temperature sensor 2-track GR connector
A16	Pinking sensor + signal	Track 1 of the pinking sensor 2-track GR connector
A17	Signal + flow temperature sensor	Track 5 of the air flowmeter 5-track GR connector
A18	Power assisted steering pressure sensor analogue signal	Track 2 of the analogue power assisted steering pressure sensor 3-track NO connector
A19	Motorised throttle potentiometer 2 signal	Track 2 of the motorised throttle valve 6-track VE connector
A20	Motorised throttle potentiometer 1 signal	Track 4 of the motorised throttle valve 6-track VE connector
A21	Not used	
A22	Atmospheric pressure sensor signal	Track B of the manifold pressure sensor 3-track GR connector

GETtheMANUALS.org

Computer track	Description	Sensor - actuator tracks
A23	Motorised throttle potentiometer sensor signal	Track 5 of the motorised throttle valve 6-track VE connector
A24	Supply (+ 5 V) for pedal potentiometer load 2	Track 5 of the accelerator potentiometer 6-track NO connector
A25	Not used	
A26	Not used	
A27	Not used	
A28	Not used	
A29	START/STOP speed limiter control	Track B1 CY connector START/STOP cruise control/speed limiter control
A30	START/STOP cruise control control	Track A3 CY connector START/STOP cruise control/speed limiter control
A31	CAN H engine	Track 28 automatic transmission computer NO connector
A32	CAN L engine	Track 42 automatic transmission computer NO connector
A33	Not used	
A34	Not used	
A35	Pinking sensor - signal	Track 2 of the pinking sensor 2-track GR connector
A36	Coolant temperature sensor signal	Track 1 of the coolant temperature sensor 2-track GR connector
A37	Signal - pedal potentiometer load 1	Track 2 of the accelerator potentiometer 6-track NO connector
A38	Signal + pedal potentiometer load 1	Track 3 of the accelerator potentiometer 6-track NO connector
A39	Signal + potentiometer pedal load 2	Track 6 of the accelerator potentiometer 6-track NO connector
A40	Signal - potentiometer pedal load 2	Track 1 of the accelerator potentiometer 6-track NO connector
A41	Not used	
A42	Not used	

GETtheMANUALS.org

Computer track	Description	Actuator - sensor tracks
A43	Signal - unit 1 sensors	– track 2 of the flowmeter 5-track GR connector – track C of the manifold pressure sensor 3-track GR connector – track 3 of the analogue power assisted steering pressure sensor 3-track NO connector – track 1 of the motorised throttle valve 6-track VE connector – track 4 of the accelerator potentiometer 6-track NO connector
A44	Injection computer power supply relay control	Track S15 of the injection computer power supply relay
A45	Fan unit 2 (high speed) control	Track 7 of the fan unit relay
A46	Not used	
A47	Not used	
A48	Not used	
A49	Not used	
A50	Right-hand camshaft inlet sensor signal	Track 2 of the right-hand camshaft sensor 3-track VE connector
A51	Left-hand camshaft inlet sensor signal	Track 2 of the left-hand camshaft sensor 3-track VE connector
A52	Left-hand camshaft inlet sensor signal	Track 1 of the left-hand camshaft sensor 3-track VE connector
A53	Not used	
A54	Cruise control programming feedback signal	Track 1 of the cruise control switch 10-track NO connector
A55	Cruise control programming control	Track 2 of the cruise control switch 10-track NO connector
A56	Air flowmeter signal	Track 1 of the flowmeter 5-track GR connector
A57	Left-hand downstream oxygen sensor signal	Track 1 of the left-hand downstream oxygen sensor 4-track BE connector
A58	Right-hand downstream oxygen sensor signal	Track 1 of the right-hand downstream oxygen sensor 4-track BE connector
A59	Left-hand upstream oxygen sensor signal	Track 1 of the left-hand upstream oxygen sensor 4-track BE connector
A60	Right-hand upstream oxygen sensor signal	Track 1 of the right-hand upstream oxygen sensor 4-track BE connector

GETtheMANUALS.org

Computer track	Description	Sensor - actuator tracks
A61	Not used	
A62	– Signal - unit 1 sensors	– Track A of the manifold pressure sensor 3-track GR connector – Track 1 of the analogue power assisted steering pressure sensor 3-track NO connector
A63	Throttle motor safety relay control	Track 40 of the throttle motor safety relay 5-track NO connector
A64	Fan unit 1 (low speed) control	Track 11 of the low speed fan unit relay NO connector
A65	Not used	
A66	Not used	
A67	Not used	
A68	Not used	
A69	TDC sensor signal	Track 2 of the TDC sensor 3-track NO connector
A70	Not used	
A71	TDC sensor signal	Track 3 of the TDC sensor 3-track NO connector
A72	Not used	
A73	– right-hand camshaft inlet sensor	Track 1 of the right-hand camshaft inlet sensor 3-track VE connector
A74	Not used	
A75	Flow sensor signal	Track 3 of the flowmeter 5-track GR connector
A76	Left-hand downstream oxygen sensor signal	Track 4 of the left-hand downstream oxygen sensor 4-track VE connector
A77	Right-hand downstream oxygen sensor signal	Track 4 of the right-hand downstream oxygen sensor 4-track VE connector
A78	Left-hand upstream oxygen sensor signal	Track 4 of the left-hand upstream oxygen sensor 4-track VE connector
A79	Right-hand upstream oxygen sensor signal	Track 4 of the right-hand upstream oxygen sensor 4-track VE connector
A80	Not used	
A81	Not used	

GETtheMANUALS.org

Connector B (40 track)

Computer track	Description	Sensor - actuator tracks
B82	Not used	
B83	Not used	
B84	Ignition coil 5 control	Track 1 GR connector coil 5
B85	Ignition coil 6 control	Track 1 GR connector coil 6
B86	Not used	
B87	Not used	
B88	Not used	
B89	Canister bleed solenoid valve control	Track 2 of the fuel vapour absorber 2-track NO connector
B90	Not used	
B91	Not used	
B92	Ignition coil 1	Track 1 GR connector coil 1
B93	Ignition coil 2 control	Track 1 GR connector coil 2
B94	Ignition coil 3 control	Track 1 GR connector coil 3
B95	Ignition coil 4 control	Track 1 GR connector coil 4
B96	Fuel pump relay control	Track 5 of the fuel pump relay 5-track NO connector
B97	Not used	
B98	Injector 6 control	Track 2 of the 2-track GR connector, injector 6
B99	Injector 5 control	Track 2 of the 2-track GR connector, injector 5
B100	Injector 4 control	Track 2 of the 2-track GR connector, injector 4
B101	Downstream oxygen sensor heating control (left-hand)	Track 2 of the left-hand downstream oxygen sensor 4-track BE connector
B102	Downstream oxygen sensor heating control (right-hand)	Track 2 of the right-hand downstream oxygen sensor 4-track BE connector
B103	Left-hand variable camshaft dephaser control	Track 1 of the left-hand variable camshaft dephaser 2-track VE connector
B104	Right-hand variable camshaft dephaser control	Track 1 of the right-hand variable camshaft dephaser 2-track VE connector

GETtheMANUALS.org

Computer track	Description	Actuator - sensor tracks
B105	Not used	
B106	Injector 1 control	Track 2 of the 2-track GR connector, injector 1
B107	Injector 2 control	Track 2 of the 2-track GR connector, injector 2
B108	Injector 3 control	Track 2 of the 2-track GR connector, injector 3
B109	Upstream oxygen sensor heating control (left-hand)	Track 2 of the left-hand upstream oxygen sensor 4-track BE connector
B110	Upstream oxygen sensor heating control (right-hand)	Track 2 of the right-hand upstream oxygen sensor 4-track BE connector
B111	Not used	
B112	Not used	
B113	+ protected battery feed	Track 24 of the engine fuse and relay box
B114	Not used	
B115	Earth	
B116	Earth	
B117	+ battery after relay 1	
B118	Earth	
B119	+ battery after relay 2	
B120	+ injection after relay protection	
B121	Earth	

GETtheMANUALS.org

1. COMPUTER REPLACEMENT AND PROGRAMMING OR REPROGRAMMING OPERATIONS

The system can be reprogrammed via the diagnostic socket using the **RENAULT CLIP** diagnostic tool (see **Technical Note 3585A**)

While the computer is being reprogrammed the fan assemblies are triggered automatically.

IMPORTANT
- **Switch on the diagnostic tool (mains or cigarette lighter feed).**
- **Connect a battery charger.**
- **Switch off all electrical consumers (lights, interior lighting, air conditioning, radio, etc.).**
- **Wait for the engine to cool (engine coolant temperature below 60 ˚C and air temperature below 50 ˚C).**

After any computer reprogramming operation:
- **Switch the ignition off and then on again.**
- **Use the diagnostic tool to carry out the following steps:**
- **Run** command **VP020 Enter VIN**.
- Following programming or reprogramming, faults may appear in the injection computer; run command **RZ007 Fault memory** to clear these faults.
- Program the throttle stops. (see **Configurations and programming: 1.**)
- Program the air path. (see **Configurations and programming: 2.**)
- **IMPORTANT: NEVER** run command **RZ019 Reinitialise programming**.This would erase the engine parameter programming.
- Carry out a road test followed by a complete test with the diagnostic tool.

IMPORTANT
Never drive the vehicle without having programmed the throttle stops.
It is forbidden to perform tests with computers borrowed from the Parts Department or from another vehicle which must then be returned.
These computers are hard-coded.
If the injection computer is defective, contact Techline and refer to the "fault finding log".

2. REPLACING THE MOTORISED THROTTLE VALVE

When replacing the throttle valve, program the throttle stops and the air path. (see **Configurations and programming: 2**)

3. REPLACING THE FLOWMETER

When replacing the flowmeter, program the air path. (see **Configurations and programming: 2.**)

4. REPLACING OR DISCONNECTING THE BATTERY

When replacing or disconnecting the battery, program the air path. (see **Configurations and programming: 2**.)

GETtheMANUALS.org

CONFIGURATIONS AND PROGRAMMING

1. Programming the throttle stops.

After replacing the computer or the motorised throttle valve, switch on the ignition, wait **30 seconds** so that the computer can program the upper and lower stops, then switch off the ignition and wait **30 seconds** for the computer to store the programmed stops. Check the programming with **ET051 Programming throttle stops: Performed**.

2. Programming the air path.

Use procedure 1 or 2 to program the air path.

Preliminary conditions: (procedures 1 and 2)

1 No present or stored faults in the injection computer (otherwise deal with the present faults or clear the stored faults by running command **RZ007 Fault memory**.)
2 The battery voltage should be above **13V** (battery charger required for the manual procedure, as the engine is off)
3 The coolant temperature should be between **70 and 97 ˚C**
4 The gear lever should be in neutral or Park position
5 All electrical consumers should be off (air conditioning unit, heating devices, headlights, de-icing)
6 The cooling fan should not be running.
7 The steering wheel should be in the centre position **(close to 0˚)**
8 The vehicle speed is zero (stationary).

Procedure 1 (with routine):

1 Clear **RZ032 Program air path**
2 With the engine running, run command **VP070 Program air path**
3 Wait for the command to finish.
4 Check status **ET802 Air path programming**
If **ET802 Air path programming** is **Completed**:
– Check that the idle speed is between **600-700 rpm**.
– If **ET802 Air path programming** is **NOT Completed**:
– Check that the throttle valve is completely closed with the ignition off,
– Check the cleanliness and conformity of the air inlet circuit,
– Restart from step **1)** or carry out **procedure 2**.

Procedure 2 (Manual): (to be used if Procedure 1 does not work)

1 Clear **RZ032 Program air path**
2 Switch off the ignition and wait **10 seconds** (for powerlatch).
3 Switch on the ignition, leaving the accelerator pedal **released** for at least **2 seconds**.
4 **Depress the accelerator pedal 5 times at "full load"** in less than **6 seconds**
5 Release the accelerator pedal **completely** for at least **5 seconds**.
6 **Depress the accelerator pedal once at "full load"** for **20 seconds**.
7 Release the accelerator pedal **completely** and start the engine within **10 seconds**.
8 Allow the engine to run for **20 seconds**.
9 Check status **ET802 Air path programming**
If **ET802 Air path programming** is **Completed**:
– Check that the idle speed is between **600-700 rpm**.
If **ET802 Air path programming** is **NOT Completed**:
– Check that the throttle valve is completely closed with the ignition off,
– Check the cleanliness and conformity of the air inlet circuit,
– Restart from step **1)** or contact the **Techline**

GETtheMANUALS.org

Tool fault	Associated DTC	Diagnostic tool title
DF001	**1001**	Coolant temperature sensor circuit
DF002	**1002**	Air temperature sensor circuit
DF008	**100A**	Pedal potentiometer circuit gang 1
DF009	**100B**	Pedal potentiometer circuit gang 2
DF023	**101E**	Coolant overheating warning light circuit
DF038	**1074**	Computer
DF056	**1006**	Air flow sensor circuit
DF059	**105E**	Misfiring on cylinder 1
DF060	**105F**	Misfiring on cylinder 2
DF061	**1060**	Misfiring on cylinder 3
DF062	**1062**	Misfiring on cylinder 4
DF063	**1062**	Misfires in cylinder 5
DF064	**1063**	Misfires in cylinder 6
DF085	**105D**	Fuel pump relay control circuit
DF090	**1011**	Vehicle speed sensor circuit
DF106	**1079**	CC/SL selector switch on steering wheel
DF116	**1070**	Multiplex network
DF151	**1013**	Main relay circuit
DF154	**1007**	Flywheel signal sensor circuit
DF200	**1003**	Atmospheric pressure sensor
DF301	**1042**	Air inlet circuit
DF328	**1041**	Throttle potentiometer circuit
DF330	**1012**	Pinking sensor circuit
DF333	**1082**	Injection → automatic transmission connection
DF345	**104B**	Ignition coil circuit
DF374	**103F**	Computer
DF379	**102E**	Cylinder 1 injector control
DF380	**102F**	Cylinder 2 injector control
DF381	**1030**	Cylinder 3 injector control

GETtheMANUALS.org

Tool fault	Associated DTC	Diagnostic tool title
DF382	**1031**	Cylinder 4 injector control
DF411	**1028**	Brake pedal sensor circuit
DF413	**1090**	Motorised throttle
DF425	**100F**	First sensor reference voltage
DF429	**102C**	Cruise control function
DF431	**1032**	Cylinder 5 injector control
DF432	**1033**	Cylinder 6 injector control
DF436	**103B**	Detection of engine misfiring
DF439	**1049**	Idle speed regulation
DF448	**1044**	Upstream oxygen sensor no. 1
DF449	**1045**	Upstream oxygen sensor no. 2
DF450	**1046**	Downstream oxygen sensor no. 1
DF451	**1047**	Downstream oxygen sensor no. 2
DF466	**1054**	Upstream oxygen sensor no. 1 heating
DF467	**1055**	Upstream oxygen sensor no. 2 heating
DF468	**1056**	Downstream oxygen sensor no. 1 heating
DF469	**1057**	Downstream oxygen sensor no. 2 heating
DF470	**105A**	Bank A fuel supply
DF471	**108C**	Bank B fuel supply
DF479	**107D**	Throttle valve servo
DF487	**107E**	Throttle stop programming
DF491	**107B**	Electronic stability program (ESP)
DF502	**107A**	Cruise control or speed limiter button
DF508	**106C**	Motorised throttle valve control
DF536	**1053**	Canister solenoid valve control circuit
DF567	**1075**	Computer
DF579	**1051**	Power-assisted steering pressure sensor circuit

GETtheMANUALS.org

Tool fault	Associated DTC	Diagnostic tool title
DF588	**1065**	Camshaft no. 1 dephaser control
DF589	**1068**	Camshaft no. 2 dephaser control
DF592	**1008**	Camshaft no. 1 sensor circuit
DF593	**1008**	Camshaft no. 2 sensor circuit
DF594	**1048**	Bank 1 richness regulation
DF595	**1092**	Bank 2 richness regulation
DF596	**1091**	Detection of overheating
DF610	**1077**	Fault on one of the 2 cruise control/speed limiter brake contacts
DF611	**1078**	Fault on the 2 cruise control/speed limiter brake contacts
DF648	**102A**	Computer
DF989	**105C**	Catalytic pre-converter no. 1
DF990	**1073**	Catalytic pre-converter no. 2

GETtheMANUALS.org

DF001 PRESENT OR STORED	COOLANT TEMPERATURE SENSOR CIRCUIT CC.O : Short circuit to earth CO.0 : Open circuit or short circuit to earth CO.1 : Open circuit or short circuit to +12 V 1.DEF : Inconsistent signal

NOTES	**Conditions for applying the fault finding procedure to stored faults:** The fault is declared present following a variation in coolant temperature (Fan unit triggered).

Check the **connection and condition of the coolant temperature sensor connector**.
Replace the connector if necessary.

Check the **resistance of the coolant temperature sensor** (value zero or infinity = total breakdown of the sensor).
Replace the coolant temperature sensor if the resistance is not:

2480 Ω ± 248 Ω at 20˚C
1750 Ω ± 175 Ω at 30˚C

Check **the insulation, continuity and absence of interference resistance** on the following connections:

Injection computer, connector A, track 36 → **Track 1 of the coolant temperature sensor**

Injection computer, connector A, track 15 → **Track 2 of the coolant temperature sensor**

Repair if necessary.

AFTER REPAIR	Follow the instructions to confirm repair. Deal with any other faults. Clear the stored faults. Switch off the ignition and wait for an end of dialogue to confirm the clearance.

GETtheMANUALS.org

DF002 PRESENT OR STORED	AIR TEMPERATURE SENSOR CIRCUIT CC.1 : Short circuit to + 12 V CO.0 : Open circuit or short circuit to earth CO.1 : Open circuit or short circuit to +12 V 1.DEF: Inconsistent signal

NOTES	**Conditions for applying the fault finding procedure to stored faults:** The fault is declared present following a variation in air temperature (Fan unit triggered).

Check the **condition and connection of the connector**.
Replace the connector if necessary.

Check the **resistance of the air temperature sensor**.
Replace the air temperature sensor if the resistance is not:

2420 Ω ± 242 Ω at 20˚C.
1050 Ω ± 105 Ω at 40˚C.
600 Ω ± 60 Ω at 60˚C.
400 Ω ± 40 Ω at 80˚C.

After replacing the throttle valve, program the air line. (See Replacement of components, Configurations and programming)

Check **the insulation, continuity and absence of interference resistance** on the following connections:

Injection computer, connector A, track 17 ⟶ **Track 5 of the flowmeter**

Injection computer, connector A, track 75 ⟶ **track 3 of the flowmeter**

Repair if necessary.

AFTER REPAIR	Follow the instructions to confirm repair. Deal with any other faults. Clear the stored faults. Switch off the ignition and wait for an end of dialogue to confirm the clearance.

GETtheMANUALS.org

DF008 PRESENT OR STORED	PEDAL POTENTIOMETER CIRCUIT GANG 1 CO.0 : Open circuit or short circuit to earth 1.DEF: Inconsistency of the signal

NOTES	**Priority for dealing with a combination of faults:** Deal first with faults **DF425 First sensor reference voltage or DF009 Pedal potentiometer circuit gang 2** if they are present or stored.

Check the **condition and connection of the connector**.
Replace the connector if necessary.

Check the **resistance of accelerator pedal position potentiometer 1**.
Replace the potentiometer if the resistance is not 1.2 kΩ ± 0.5 kΩ between tracks 2 and 4 of the pedal potentiometer.

Check **the insulation, continuity and absence of interference resistance** on the following connections:

- **Injection computer, connector A, track 37** → **track 2 of the accelerator pedal position potentiometer 1**
- **Injection computer, connector A, track 38** → **track 3 of the accelerator pedal position potentiometer 1**
- **Injection computer, connector A, track 43** → **track 4 of the accelerator pedal position potentiometer 1**

Repair if necessary.

AFTER REPAIR	Follow the instructions to confirm repair. Deal with any other faults. Clear the stored faults. Switch off the ignition and wait for an end of dialogue to confirm the clearance.

GETtheMANUALS.org

DF009 PRESENT OR STORED	PEDAL POTENTIOMETER CIRCUIT GANG 2 CO.0 : Open circuit or short circuit to earth 1.DEF: Inconsistency of the signal

NOTES	**Priority for dealing with a combination of faults:** Deal with the **DF425 First sensor reference voltage fault** first if it is present or stored. If faults **DF333 Injection → Automatic transmission connection** and **DF491 Electronic Stability Program (ESP)** are also present, check the computer earth lines on **tracks 115 and 116** (see **ALP 1**). Repair them if necessary. Switch off the ignition and wait for an end of dialogue to confirm the fault.

Check the **condition and connection of the connector**.
Replace the connector if necessary.

Check the **resistance of accelerator pedal position potentiometer 2**.
Replace the potentiometer if the resistance is not **1.7 kΩ ± 0.7 kΩ** between **tracks 1 and 5** of the pedal potentiometer.

Check **the insulation, continuity and absence of interference resistance** on the following connections:

- **Injection computer, connector A, track 24** → **Track 5 of the accelerator pedal position potentiometer 2**
- **Injection computer, connector A, track 39** → **Track 6 of the accelerator pedal position potentiometer 2**
- **Injection computer, connector A, track 40** → **Track 1 of the accelerator pedal position potentiometer 2**

Repair if necessary.

AFTER REPAIR	Follow the instructions to confirm repair. Deal with any other faults. Clear the stored faults. Switch off the ignition and wait for an end of dialogue to confirm the clearance.

GETtheMANUALS.org

DF023 PRESENT OR STORED	COOLANT TEMPERATURE OVERHEATING WARNING LIGHT CIRCUIT

NOTES	None.

Run a multiplex network test (see **88B, Multiplex**).
Carry out fault finding on the Instrument panel system (see **83A, Instrument panel**).

AFTER REPAIR	Follow the instructions to confirm repair. Deal with any other faults. Clear the stored faults. Switch off the ignition and wait for an end of dialogue to confirm the clearance.

GETtheMANUALS.org

DF038 PRESENT OR STORED	COMPUTER 1.DEF: Internal command module: RAM (Random Access Memory) error

NOTES	Using parameter **PR071 Computer supply voltage**, check that the battery voltage is not below 11 V. Switch off the ignition and wait for dialogue between the computer and the diagnostic tool to end, then switch on the ignition again to confirm the fault.

Use the following procedure:
– Switch on the ignition.
– Clear the stored fault on the injection computer using the diagnostic tool.
– Switch off the ignition and wait for dialogue between the computer and the diagnostic tool to end.
– Switch on the ignition and establish dialogue with the injection computer.
If the computer fault is still present, contact the Techline.

AFTER REPAIR	Follow the instructions to confirm repair. Deal with any other faults. Clear the stored faults. Switch off the ignition and wait for an end of dialogue to confirm the clearance.

GETtheMANUALS.org

DF056 PRESENT OR STORED	AIR FLOWMETER CIRCUIT CO.0 : Open circuit or short circuit to earth CO.1 : Short circuit or open circuit to + 12 V 1.DEF: Inconsistency of the signal

NOTES	Using parameter **PR071 Computer supply voltage**, check that the battery voltage is not below 11 V. Switch off the ignition and wait for dialogue between the computer and the diagnostic tool to end, then switch on the ignition again to confirm the fault.

Check **the connection and condition** of the air flow sensor connector. Replace the connector if necessary.

Check that the sensor is **pneumatically connected**. Repair if necessary.

Check that the **inlet circuit has no leaks**.
Repair if necessary.

Check the **flowmeter resistance between track 1 and track 3**.
Replace the flowmeter if the resistance is not **2420 Ω ± 242 Ω**.

After the flowmeter has been replaced, program the air line. (See Replacement of components, Configurations and programming)

Check **the insulation, continuity and absence of interference resistance** on the following connections:

Injection computer, connector A, track 43 → **Track 2 of the flowmeter**

Injection computer, connector A, track 56 → **Track 1 of the flowmeter**

Injection computer, connector A, track 75 → **Track 3 of the flowmeter**

Main relay track 3 → **Track 4 of the flowmeter**

Repair if necessary.

AFTER REPAIR	Follow the instructions to confirm repair. Deal with any other faults. Clear the stored faults. Switch off the ignition and wait for an end of dialogue to confirm the clearance.

GETtheMANUALS.org

DF059 PRESENT OR STORED	COMBUSTION MISFIRES ON CYLINDER 1

NOTES	**Special note:** Indicates that the fault is confined to this cylinder. Priority for dealing with a combination of faults: – If the following faults: **DF059 Misfiring on cylinder 1;** **DF060 Misfiring on cylinder 2;** **DF061 Misfiring on cylinder 3;** **DF062 Misfiring on cylinder 4;** **DF063 Misfiring on cylinder 5;** **DF064 Misfiring on cylinder 6;** are all present, carry out procedure **DF436 Combustion misfire fault finding**. – If the fault is confined to this cylinder, deal with fault **DF436: Detection of misfires** first.

Check:
– condition and connection of the injector,
– condition of the pipe supplying fuel to the injector,
– condition and type of spark plug,
– the operation of the coil following fault procedure **DF345 Ignition coil circuit**,
– compression.
Repair if necessary.

AFTER REPAIR	Follow the instructions to confirm repair. Deal with any other faults. Clear the stored faults. Switch off the ignition and wait for an end of dialogue to confirm the clearance.

GETtheMANUALS.org

DF060 PRESENT OR STORED	COMBUSTION MISFIRING ON CYLINDER 2

NOTES	**Special note:** Indicates that the fault is confined to this cylinder. Priority for dealing with a combination of faults: – If the following faults: **DF059 Misfiring on cylinder 1;** **DF060 Misfiring on cylinder 2;** **DF061 Misfiring on cylinder 3;** **DF062 Misfiring on cylinder 4;** **DF063 Misfiring on cylinder 5;** **DF064 Misfiring on cylinder 6;** are all present, carry out procedure **DF436 Combustion misfire fault finding**. – If the fault is confined to this cylinder, deal with fault **DF436: Detection of misfires** first.

Check:
– condition and connection of the injector,
– condition of the pipe supplying fuel to the injector,
– condition and type of spark plug,
– the operation of the coil following fault procedure **DF345 Ignition coil circuit**,
– compression.
Repair if necessary.

AFTER REPAIR	Follow the instructions to confirm repair. Deal with any other faults. Clear the stored faults. Switch off the ignition and wait for an end of dialogue to confirm the clearance.

GETtheMANUALS.org

DF061 PRESENT OR STORED	COMBUSTION MISFIRING ON CYLINDER 3 CO.0 : Open circuit or short circuit to earth CO.1 : Short circuit or open circuit to + 12 V 1.DEF: Inconsistency of the signal

NOTES	**Special note:** Indicates that the fault is confined to this cylinder. Priority for dealing with a combination of faults: – If the following faults: **DF059 Misfiring on cylinder 1;** **DF060 Misfiring on cylinder 2;** **DF061 Misfiring on cylinder 3;** **DF062 Misfiring on cylinder 4;** **DF063 Misfiring on cylinder 5;** **DF064 Misfiring on cylinder 6;** are all present, carry out procedure **DF436 Combustion misfire fault finding**. – If the fault is confined to this cylinder, deal with fault **DF436: Detection of misfires** first.

Check:
– condition and connection of the injector,
– condition of the pipe supplying fuel to the injector,
– condition and type of spark plug,
– the operation of the coil following fault procedure **DF345 Ignition coil circuit**,
– compression.
Repair if necessary.

AFTER REPAIR	Follow the instructions to confirm repair. Deal with any other faults. Clear the stored faults. Switch off the ignition and wait for an end of dialogue to confirm the clearance.

GETtheMANUALS.org

DF062 PRESENT OR STORED	COMBUSTION MISFIRING ON CYLINDER 4

NOTES	**Special note:** Indicates that the fault is confined to this cylinder. Priority for dealing with a combination of faults: – If the following faults: **DF059 Misfiring on cylinder 1;** **DF060 Misfiring on cylinder 2;** **DF061 Misfiring on cylinder 3;** **DF062 Misfiring on cylinder 4;** **DF063 Misfiring on cylinder 5;** **DF064 Misfiring on cylinder 6;** are all present, carry out procedure **DF436 Combustion misfire fault finding**. – If the fault is confined to this cylinder, deal with fault **DF436: Detection of misfires** first.

Check:
– condition and connection of the injector,
– condition of the pipe supplying fuel to the injector,
– condition and type of spark plug,
– the operation of the coil following fault procedure **DF345 Ignition coil circuit**,
– compression.
Repair if necessary.

AFTER REPAIR	Follow the instructions to confirm repair. Deal with any other faults. Clear the stored faults. Switch off the ignition and wait for an end of dialogue to confirm the clearance.

GETtheMANUALS.org

DF063 PRESENT OR STORED	COMBUSTION MISFIRING ON CYLINDER 5

NOTES	**Special note:** Indicates that the fault is confined to this cylinder. Priority for dealing with a combination of faults: – If the following faults: **DF059 Misfiring on cylinder 1;** **DF060 Misfiring on cylinder 2;** **DF061 Misfiring on cylinder 3;** **DF062 Misfiring on cylinder 4;** **DF063 Misfiring on cylinder 5;** **DF064 Misfiring on cylinder 6;** are all present, carry out procedure **DF436 Combustion misfire fault finding**. – If the fault is confined to this cylinder, deal with fault **DF436: Detection of misfires** first.

Check:
– condition and connection of the injector,
– condition of the pipe supplying fuel to the injector,
– condition and type of spark plug,
– the operation of the coil following fault procedure **DF345 Ignition coil circuit**,
– compression.
Repair if necessary.

AFTER REPAIR	Follow the instructions to confirm repair. Deal with any other faults. Clear the stored faults. Switch off the ignition and wait for an end of dialogue to confirm the clearance.

GETtheMANUALS.org

DF064 PRESENT OR STORED	COMBUSTION MISFIRING ON CYLINDER 6

NOTES	**Special note:** Indicates that the fault is confined to this cylinder. Priority for dealing with a combination of faults: – If the following faults: **DF059 Misfiring on cylinder 1;** **DF060 Misfiring on cylinder 2;** **DF061 Misfiring on cylinder 3;** **DF062 Misfiring on cylinder 4;** **DF063 Misfiring on cylinder 5;** **DF064 Misfiring on cylinder 6;** are all present, carry out procedure **DF436 Combustion misfire fault finding**. – If the fault is confined to this cylinder, deal with fault **DF436: Detection of misfires** first.

Check:
– condition and connection of the injector,
– condition of the pipe supplying fuel to the injector,
– condition and type of spark plug,
– the operation of the coil following fault procedure **DF345 Ignition coil circuit**,
– compression.
Repair if necessary.

AFTER REPAIR	Follow the instructions to confirm repair. Deal with any other faults. Clear the stored faults. Switch off the ignition and wait for an end of dialogue to confirm the clearance.

GETtheMANUALS.org

DF085 PRESENT OR STORED	FUEL PUMP RELAY CONTROL CIRCUIT

NOTES	**Conditions for applying the fault finding procedure to stored faults:** The fault appears after the ignition has been switched on.
	Special note: – **OBD warning light** lit.

Disconnect the battery and the injection computer.
Check **the cleanliness** and **condition** of the computer connections.
Check **the cleanliness** and **condition** of the fuel pump relay connector connections.
Repair if necessary.

Using the universal bornier, check for **insulation** and **continuity** on the following connection:

Computer, connector **B, track 96** ⟶ **track 2** of the fuel pump relay

Repair if necessary.

If the fault is still present**, contact the Techline**.

AFTER REPAIR	Follow the instructions to confirm repair. Deal with any other faults. Clear the stored faults. Switch off the ignition and wait for an end of dialogue to confirm the clearance.

GETtheMANUALS.org

DF090 PRESENT OR STORED	VEHICLE SPEED SENSOR CIRCUIT 1.DEF: Inconsistency of the signal

NOTES	None.

Run a multiplex network test (see **88B, Multiplex**).
Carry out fault finding on ABS and ESP system (see **38C, ABS**).

AFTER REPAIR	Follow the instructions to confirm repair. Deal with any other faults. Clear the stored faults. Switch off the ignition and wait for an end of dialogue to confirm the clearance.

GETtheMANUALS.org

DF106 PRESENT OR STORED	CRUISE CONTROL/SPEED LIMITER SELECTOR SWITCH ON STEERING WHEEL

NOTES	Using parameter **PR071 Computer supply voltage**, check that the battery voltage is not below 11 V. Switch off the ignition and wait for dialogue between the computer and the diagnostic tool to end, then switch on the ignition again to confirm the fault.

Check the **condition and connection** of the function selector switch connector.
Repair if necessary.

Check **the insulation, continuity and absence of interference resistance** on the following connections:

Track 55, injection computer connector A → **Function selector switch**

Injection computer, connector A, track 54 → **Function selector switch**

Repair if necessary.

If the problem persists, replace the switch on the steering wheel.

AFTER REPAIR	Follow the instructions to confirm repair. Deal with any other faults. Clear the stored faults. Switch off the ignition and wait for an end of dialogue to confirm the clearance.

GETtheMANUALS.org

DF116 PRESENT OR STORED	MULTIPLEX NETWORK

NOTES	None.

Carry out a fault finding procedure on the multiplex network (see **88B Multiplex network**).

AFTER REPAIR	Follow the instructions to confirm repair. Deal with any other faults. Clear the stored faults. Switch off the ignition and wait for an end of dialogue to confirm the clearance.

GETtheMANUALS.org

DF151 PRESENT OR STORED	MAIN RELAY CIRCUIT CO.0 : Open circuit or short circuit to earth

NOTES	Using parameter **PR071 Computer supply voltage**, check that the battery voltage is not below 11 V. Switch off the ignition and wait for dialogue between the computer and the diagnostic tool to end, then switch on the ignition again to confirm the fault.

Check **the condition of the battery and the vehicleearths**.
Repair if necessary.

Check the **connection and condition of the main relay connector**.
Repair if necessary.

Check the **main relay coil**.
Replace the relay if necessary.

Check **for 12 V on tracks 1 and 5 of the main relay**.
Repair the wiring up to the fuse if necessary.

Check **the insulation, continuity and absence of interference resistance** on the following connections:

Injection computer, connector A, track 44 ⟶ **Track 2 of the main relay**

Injection computer, connector B, track 120 ⟶ **Track 3 of the main relay**

Repair if necessary.

AFTER REPAIR	Follow the instructions to confirm repair. Deal with any other faults. Clear the stored faults. Switch off the ignition and wait for an end of dialogue to confirm the clearance.

GETtheMANUALS.org

DF154 PRESENT OR STORED	FLYWHEEL SIGNAL SENSOR CIRCUIT 1.DEF: No signal 2.DEF: Inconsistent signal

NOTES	**Conditions for applying the fault finding procedure to stored faults:** The fault is declared present when the engine is running.
	Special note: In the event of flywheel signal loss, the OBD warning light is illuminated: injection in defect mode.
	Use the Wiring Diagrams Technical Note, ESPACE 4 ph I / II / VELSATIS ph I / II.

Test the battery and run fault finding on the charging circuit (**see Technical Note 6014A, Checking the charging circuit**).
Check the **cleanliness** and **condition** of the flywheel signal sensor connectors. Repair if necessary.
Check that the injection computer connector is clean and in good condition. Repair if necessary.
With the ignition on, check for a voltage of between **4.5 and 6 volts** on connection **3FB** of the flywheel signal sensor, **component code 149**. Repair if necessary.
Use the universal bornier to check the insulation and continuity of the following connections: Between the injection computer, **component code 120** and the **flywheel signal sensor, component code 149**. **– connection code 3BL** **– connection code 3FB** **– connection code 3BG** If there is a repair procedure (see **Technical Note 6015A, Repairing electrical wiring, Wiring: Precautions for repair**), repair the wiring, otherwise replace the wiring.
If the fault is still present, replace the flywheel signal sensor.
If the problem is still present, contact the Techline.

AFTER REPAIR	Follow the instructions to confirm repair. Deal with any other faults. Clear the stored faults. Switch off the ignition and wait for an end of dialogue to confirm the clearance.

GETtheMANUALS.org

DF200 PRESENT OR STORED	ATMOSPHERIC PRESSURE SENSOR CO.0 : Open circuit or short circuit to earth CO.1 : Short circuit or open circuit to + 12 V 1.DEF: Inconsistency of the signal

NOTES	**Priority for dealing with a combination of faults:** Apply the procedure for dealing with faults **DF328 Throttle potentiometer circuit or DF008 Throttle potentiometer circuit gang 1** first if they are present or stored.
	Using parameter **PR071 Computer supply voltage**, check that the battery voltage is not below 11 V. Switch off the ignition and wait for dialogue between the computer and the diagnostic tool to end, then switch on the ignition again to confirm the fault.

Check the **connection and condition of the atmospheric pressure sensor connector**.
Replace the connector if necessary.

Check that the pressure sensor is **pneumatically connected**.
Repair if necessary.

Check **the insulation, continuity and absence of interference resistance** on the following connections:

- **Injection computer, connector A, track 43** → **Track C of the manifold pressure sensor**
- **Injection computer, connector A, track 22** → **Manifold pressure sensor, track B**
- **Injection computer, connector A, track 62** → **Manifold pressure sensor, track A**

Repair if necessary.

AFTER REPAIR	Follow the instructions to confirm repair. Deal with any other faults. Clear the stored faults. Switch off the ignition and wait for an end of dialogue to confirm the clearance.

GETtheMANUALS.org

DF301 PRESENT OR STORED	AIR INLET CIRCUIT CO.0 : Open circuit or short circuit to earth

NOTES	Using parameter **PR071 Computer supply voltage**, check that the battery voltage is not below 11 V. Switch off the ignition and wait for dialogue between the computer and the diagnostic tool to end, then switch on the ignition again to confirm the fault.

Check the **connection and condition of the variable inlet solenoid valve connector**.
Repair if necessary.

With the ignition switched on, check for **12 V** on track A1 of the variable inlet solenoid valve. Repair the line to the main relay if necessary.

Check **the insulation, continuity and the absence of interference resistance** of the following connections:

Injection computer, connector A, track 7 ⟶ **Track 2 of the variable inlet solenoid valve**

Repair if necessary.

If necessary, replace the variable inlet solenoid valve.

AFTER REPAIR	Follow the instructions to confirm repair. Deal with any other faults. Clear the stored faults. Switch off the ignition and wait for an end of dialogue to confirm the clearance.

GETtheMANUALS.org

DF328 PRESENT OR STORED	THROTTLE POTENTIOMETER CIRCUIT CO.0 : Open circuit or short circuit to earth CO.1 : Short circuit or open circuit to + 12 V 1.DEF: Inconsistency of the signal 2.DEF: Signal outside lower limit

NOTES	**Priority for dealing with a combination of faults:** Deal first with the **DF425 First sensor reference voltage fault** if it is present or stored.
	Using parameter **PR071 Computer supply voltage**, check that the battery voltage is not below 11 V. Switch off the ignition and wait for dialogue between the computer and the diagnostic tool to end, then switch on the ignition again to confirm the fault.

Check **the connection and condition** of the throttle potentiometer connector.
Replace the connector if necessary.

Check **the insulation, continuity and the absence of interference resistance** of the following connections:

- **Injection computer, connector A, track 24** → **Track A1 of the throttle potentiometer**
- **Injection computer, connector A, track 19** → **Track A2 of the throttle potentiometer**
- **Injection computer, connector A, track 20** → **Track A4 of the throttle potentiometer**
- **Injection computer, connector A, track 23** → **Track A5 of the throttle potentiometer**

Repair if necessary.

AFTER REPAIR	Follow the instructions to confirm repair. Deal with any other faults. Clear the stored faults. Switch off the ignition and wait for an end of dialogue to confirm the clearance.

GETtheMANUALS.org

DF330 PRESENT OR STORED	PINKING SENSOR CIRCUIT CO.0: Open circuit or short circuit to earth CO.1: Short circuit or open circuit to + 12 V

NOTES	None.

Check the **connection and condition of the pinking sensor connector**.
Replace the connector if necessary.

Check the **tightness of the pinking sensor** on the engine block.
Repair if necessary.

Check **the insulation, continuity and the absence of interference resistance** of the following connections:

Injection computer, connector A, track 16 → **Track 1 of the pinking sensor**

Injection computer, connector A, track 35 → **Track 2 of the pinking sensor**

Earth → **Pinking sensor screening**

Repair if necessary.

If everything is correct, replace the pinking sensor.

AFTER REPAIR	Follow the instructions to confirm repair. Deal with any other faults. Clear the stored faults. Switch off the ignition and wait for an end of dialogue to confirm the clearance.

GETtheMANUALS.org

DF333 PRESENT OR STORED	INJECTION → AUTOMATIC TRANSMISSION CONNECTION 1.DEF: No signal

NOTES	**Priority for dealing with a combination of faults:** Deal with faults **DF009 Pedal potentiometer circuit gang 2 or DF491 Electronic Stability Program (ESP)** first if they are present or stored; check the computer earth lines on **tracks 115** and **116** using the **ALP 1** procedure.
	Using parameter **PR071 Computer supply voltage**, check that the battery voltage is not below 11 V. Switch off the ignition and wait for dialogue between the computer and the diagnostic tool to end, then switch on the ignition again to confirm the fault.

Run a multiplex network test (see **88B, Multiplexing**).
Carry out fault finding on the automatic transmission (see **23A, Automatic transmission**).

AFTER REPAIR	Follow the instructions to confirm repair. Deal with any other faults. Clear the stored faults. Switch off the ignition and wait for an end of dialogue to confirm the clearance.

GETtheMANUALS.org

DF345 PRESENT OR STORED	IGNITION COIL CIRCUIT

NOTES	**Conditions for detecting the fault by injection computer:** Engine operating with starter motor activated or running for 10 seconds. **If one cylinder is misfiring, look for faults on that cylinder first.** Using parameter **PR071 Computer supply voltage**, check that the battery voltage is not below 11 V. Switch off the ignition and wait for dialogue between the computer and the diagnostic tool to end, then switch on the ignition again to confirm the fault.

Check the **connection and condition of the coil connectors**.
Replace the connector(s) if necessary.

Check the **tightness of the pinking sensor** on the engine block.
Repair if necessary.

Check **the insulation, continuity and the absence of interference resistance** of the following connections:

- **Injection computer, connector B, track 92** → **track 1 of coil 1**
- **Injection computer, connector B, track 93** → **track 1 of coil 2**
- **Injection computer, connector B, track 94** → **track 1 of coil 3**
- **Injection computer, connector B, track 95** → **track 1 of coil 4**
- **Injection computer, connector B, track 84** → **Track 1 of coil 5**
- **Injection computer, connector B, track 85** → **track 1 of coil 6**

Repair if necessary.

With the ignition on, check for **12 V on track A3 of each coil**.
Repair if necessary.

If everything is correct:
– check that the spark plugs are in good condition,
– fit the spark plugs and connect them to their coils; place the plugs in contact with a reliable earth and activate the starter motor to check that all the coils give a good spark.

Replace any non-conforming spark plug(s).

AFTER REPAIR	Follow the instructions to confirm repair. Deal with any other faults. Clear the stored faults. Switch off the ignition and wait for an end of dialogue to confirm the clearance.

GETtheMANUALS.org

DF374 PRESENT OR STORED	COMPUTER 1.DEF: Internal electrical fault

NOTES	Using parameter **PR071 Computer supply voltage**, check that the battery voltage is not below 11 V. Switch off the ignition and wait for dialogue between the computer and the diagnostic tool to end, then switch on the ignition again to confirm the fault.

Use the following procedure:
– Switch on the ignition.
– Clear the stored fault on the injection computer using the diagnostic tool.
– Switch off the ignition and wait for dialogue between the computer and the diagnostic tool to end.
– Switch on the ignition and establish dialogue with the injection computer.
If the computer fault is still present, contact the Techline.

AFTER REPAIR	Follow the instructions to confirm repair. Deal with any other faults. Clear the stored faults. Switch off the ignition and wait for an end of dialogue to confirm the clearance.

GETtheMANUALS.org

DF379 PRESENT OR STORED	CYLINDER 1 INJECTOR CONTROL 1.DEF: Open circuit or short circuit

NOTES	**Conditions for detecting the fault:** Run the engine. If the fuel pump does not operate, run the **AC015 Fuel pump relay** fault finding check first, because a fuel pump relay fault can cause this fault to occur.
	Using parameter **PR071 Computer supply voltage**, check that the battery voltage is not below 11 V. Switch off the ignition and wait for dialogue between the computer and the diagnostic tool to end, then switch on the ignition again to confirm the fault.

Check the **injector 1 resistance.**
Replace the injector if the resistance is not 15 Ω ± 0.8 Ω at 20˚C.

While the starter motor is operating, check for **12 V** on injector 1.
If necessary, repair the line up to the fuel pump relay.

Check the **insulation, continuity and the absence of interference resistance** of the following connection:

Injection computer, connector B, track 106 ⟶ **Track 2 of injector 1**

Repair if necessary.

Note:
If all the injectors are faulty, check that the fuel pump relay is not defective.

AFTER REPAIR	Follow the instructions to confirm repair. Deal with any other faults. Clear the stored faults. Switch off the ignition and wait for an end of dialogue to confirm the clearance.

GETtheMANUALS.org

DF380 PRESENT OR STORED	CYLINDER 2 INJECTOR CONTROL 1.DEF: Open circuit or short circuit

NOTES	**Conditions for detecting the fault:** Run the engine. If the fuel pump does not operate, run the **AC015 Fuel pump relay** fault finding check first, because a fuel pump relay fault can cause this fault to occur.
	Using parameter **PR071 Computer supply voltage**, check that the battery voltage is not below 11 V. Switch off the ignition and wait for dialogue between the computer and the diagnostic tool to end, then switch on the ignition again to confirm the fault.

Check the **injector 1 resistance.**
Replace the injector if the resistance is not 15 Ω ± 0.8 Ω at 20˚C.

While the starter motor is operating, check for **12 V** on injector 2.
If necessary, repair the line up to the fuel pump relay.

Check the **insulation, continuity and the absence of interference resistance** of the following connection:

Injection computer, connector B, track 107 ⟶ **Track 2 of injector 2**

Repair if necessary.

Note:
If all the injectors are faulty, check that the fuel pump relay is not defective.

AFTER REPAIR	Follow the instructions to confirm repair. Deal with any other faults. Clear the stored faults. Switch off the ignition and wait for an end of dialogue to confirm the clearance.

GETtheMANUALS.org

DF381 PRESENT OR STORED	CYLINDER 3 INJECTOR CONTROL 1.DEF: Open circuit or short circuit

NOTES	**Conditions for detecting the fault:** Run the engine. If the fuel pump does not operate, run the **AC015 Fuel pump relay** fault finding check first, because a fuel pump relay fault can cause this fault to occur.
	Using parameter **PR071 Computer supply voltage**, check that the battery voltage is not below 11 V. Switch off the ignition and wait for dialogue between the computer and the diagnostic tool to end, then switch on the ignition again to confirm the fault.

Check the **resistance of injector 3**.
Replace the injector if the resistance is not 15 Ω ± 0.8 Ω at 20˚C.

While the starter motor is operating, check for **12 V** on injector 3.
If necessary, repair the line up to the fuel pump relay.

Check the **insulation, continuity and the absence of interference resistance** of the following connection:

Injection computer, connector B, track 108 ⟶ **Track 2 of injector 3**

Repair if necessary.

Note:
If all the injectors are faulty, check that the fuel pump relay is not defective.

AFTER REPAIR	Follow the instructions to confirm repair. Deal with any other faults. Clear the stored faults. Switch off the ignition and wait for an end of dialogue to confirm the clearance.

GETtheMANUALS.org

DF382 PRESENT OR STORED	CYLINDER 4 INJECTOR CONTROL 1.DEF: Open circuit or short circuit

NOTES	**Conditions for detecting the fault:** Run the engine. If the fuel pump does not operate, run the **AC015 Fuel pump relay** fault finding check first, because a fuel pump relay fault can cause this fault to occur.
	Using parameter **PR071 Computer supply voltage**, check that the battery voltage is not below 11 V. Switch off the ignition and wait for dialogue between the computer and the diagnostic tool to end, then switch on the ignition again to confirm the fault.

Check the **resistance of injector 4**.
Replace the injector if the resistance is not 15 Ω ± 0.8 Ω at 20˚C.

While the starter motor is operating, check for **12 V** on injector 4.
If necessary, repair the line up to the fuel pump relay.

Check the **insulation, continuity and the absence of interference resistance** of the following connection:

Injection computer, connector B, track 100 ⟶ **Track 2 of injector 4**

Repair if necessary.

Note:
If all the injectors are faulty, check that the fuel pump relay is not defective.

AFTER REPAIR	Follow the instructions to confirm repair. Deal with any other faults. Clear the stored faults. Switch off the ignition and wait for an end of dialogue to confirm the clearance.

GETtheMANUALS.org

DF411 PRESENT OR STORED	BRAKE PEDAL SENSOR CIRCUIT 1.DEF: Inconsistency of the signal

NOTES	When running this fault finding check, the ABS/ESP computer must not be faulty. If fault **DF116: Multiplex network** is present, deal with it first. Switch off the ignition and wait for an end of dialogue to confirm the fault.

Check the **connection and condition of the brake pedal switch connector**. Replace the connector if necessary.
Check the **operation of the brake pedal switch**. Replace the switch if necessary.
Check the **insulation, continuity and the absence of interference resistance** of the following connection: **Injection computer, connector A, track 11** ⟶ **Track 3 of the brake pedal switch connector** Repair if necessary.
Check the connection between the brake pedal sensor and the ABS computer (see **38C, ABS system**).

AFTER REPAIR	Follow the instructions to confirm repair. Deal with any other faults. Clear the stored faults. Switch off the ignition and wait for an end of dialogue to confirm the clearance.

GETtheMANUALS.org

DF413 PRESENT OR STORED	MOTORISED THROTTLE 1.DEF: Motorised throttle: closed

NOTES	**Priority for dealing with a combination of faults:** – Deal first with fault **DF413 Motorised throttle** if it is present and check the computer earth lines on tracks **118** and **121** using the **ALP 1** procedure. – Deal with fault **DF487 Programming throttle stops** first if it is present. Using parameter **PR071 Computer supply voltage**, check that the battery voltage is not below 11 V. Switch off the ignition and wait for dialogue between the computer and the diagnostic tool to end, then switch on the ignition again to confirm the fault.

Check the **connection and condition of the motorised throttle connector**.
Repair if necessary.

Check **the insulation, continuity and the absence of interference resistance** of the following connections:

Injection computer, connector A, track 62 → **track 6 of the motorised throttle valve**

Injection computer, connector A, track 1 → **track 3 of the motorised throttle valve**

Repair if necessary.

If everything is correct, replace the motorised throttle body.

After replacing the throttle valve, program the air path. (See Replacement of components, Configurations and programming)

AFTER REPAIR	Follow the instructions to confirm repair. Deal with any other faults. Clear the stored faults. Switch off the ignition and wait for an end of dialogue to confirm the clearance.

GETtheMANUALS.org

DF425 PRESENT OR STORED	FIRST SENSOR REFERENCE VOLTAGE 1.DEF: Open circuit or short circuit

NOTES	This fault takes priority over the following faults: **DF328 Throttle potentiometer circuit;** **DF008 Pedal potentiometer circuit gang 1;** **DF009 Pedal potentiometer circuit gang 2;** **DF200 Atmospheric pressure sensor;** **DF579 Power-assisted steering pressure sensor circuit;** **DF106 Cruise control/speed limiter selector switches on steering wheel** **DF056 Air flowmeter circuit.** Check that parameter **PR071: Computer supply voltage** matches the battery voltage. If the voltage shown by parameter **PR071** is greater than the battery voltage, there is a short circuit to earth. If the voltage shown by parameter **PR071** is less than the battery voltage, there is a short circuit to + 12 V. Using parameter **PR071 Computer supply voltage**, check that the battery voltage is not below 11 V. Switch off the ignition and wait for dialogue between the computer and the diagnostic tool to end, then switch on the ignition again to confirm the fault.

Check the condition of the connectors for the following components:
– accelerator pedal potentiometer,
– flow sensor,
– power-assisted steering pressure sensor,
– manifold pressure sensor,
– throttle valve potentiometer.
Replace the connector(s) if necessary.

To check if the fault changes from present to stored, disconnect the following sensors, **one** by **one**:
– accelerator pedal potentiometer,
– flow sensor,
– power-assisted steering pressure sensor,
– manifold pressure sensor,
– throttle valve potentiometer.
If necessary, deal with the fault that applies to the sensor.

AFTER REPAIR	Follow the instructions to confirm repair. Deal with any other faults. Clear the stored faults. Switch off the ignition and wait for an end of dialogue to confirm the clearance.

GETtheMANUALS.org

DF425 **CONTINUED**	

Check **the insulation, continuity and the absence of interference resistance** of the following connections:

- **Injection computer, connector A, track 43** → **track 1 of the throttle potentiometer**
- **Injection computer, connector A, track 43** → **track C of the manifold pressure sensor**
- **Injection computer, connector A, track 43** → **track 2 of the flowmeter**
- **Injection computer, connector A, track 43** → **track 3 of the power-assisted steering pressure sensor**
- **Injection computer, connector A, track 43** → **track 4 of the accelerator pedal potentiometer**
- **Injection computer, connector A, track 24** → **track 5 of the accelerator pedal potentiometer**

Repair if necessary.

If the fault has still not been solved, deal with the other faults and then proceed to the conformity check.

AFTER REPAIR	Follow the instructions to confirm repair. Deal with any other faults. Clear the stored faults. Switch off the ignition and wait for an end of dialogue to confirm the clearance.

GETtheMANUALS.org

DF429 PRESENT OR STORED	CRUISE CONTROL FUNCTION CO.0: Open circuit or short circuit to earth 1.DEF: Inconsistency of the signal 1.DEF: Internal electronic fault

NOTES	**Priority for dealing with a combination of faults:** Firstly, deal with the following faults: **DF333 Injection → automatic transmission connection,** **DF090 Vehicle speed sensor circuit,** **DF411 Brake pedal sensor circuit,** **DF116 Multiplex network,** **DF491 Electronic Stability Program (ESP),** **DF502 Cruise control or speed limiter button,** **DF411 Brake pedal sensor circuit,** **DF106 Cruise control/speed limiter selector switches on steering wheel** if they are present or stored, as these are the probable cause of this fault.

WARNING
This fault may appear if the wiring harness has been damaged.
Follow the procedure described in the Wiring Check in the Introduction.
This check enables the condition and the conformity of the engine wiring harness to be checked.

If fault **DF429 Vehicle speed regulator function** is declared present, refer to section on **Cruise control/Speed limiter** conformity check, and Interpretation of statuses **ET042 Cruise control/Speed limiter and ET415 Speed regulator deactivation**.
Check that by pressing the buttons the statuses change and that, with the ignition switched on, all the values are correct.
If the fault is still present, contact the Techline.

AFTER REPAIR	Follow the instructions to confirm repair. Deal with any other faults. Clear the stored faults. Switch off the ignition and wait for an end of dialogue to confirm the clearance.

GETtheMANUALS.org

DF431 PRESENT OR STORED	CYLINDER 5 INJECTOR CONTROL 1.DEF: Open circuit or short circuit

NOTES	**Conditions for detecting the fault:** Run the engine. If the fuel pump does not operate, run the **AC015 Fuel pump relay** fault finding check first, because a fuel pump relay fault can cause this fault to occur.
	Using parameter **PR071 Computer supply voltage**, check that the battery voltage is not below 11 V. Switch off the ignition and wait for dialogue between the computer and the diagnostic tool to end, then switch on the ignition again to confirm the fault.

Check the **resistance of injector 5**.
Replace the injector if the resistance is not 15 Ω ± 0.8 Ω at 20˚C.

While the starter motor is operating, check for **12 V** on injector 5.
If necessary, repair the line up to the fuel pump relay.

Check the **insulation, continuity and the absence of interference resistance** of the following connection:

Injection computer, connector B, track 99 → **Track 2 of injector 5**

Repair if necessary.

Note:
If all the injectors are faulty, check that the fuel pump relay is not defective.

AFTER REPAIR	Follow the instructions to confirm repair. Deal with any other faults. Clear the stored faults. Switch off the ignition and wait for an end of dialogue to confirm the clearance.

GETtheMANUALS.org

DF432 PRESENT OR STORED	CYLINDER 6 INJECTOR CONTROL 1.DEF: Open circuit or short circuit

NOTES	**Conditions for detecting the fault:** Run the engine. If the fuel pump does not operate, run the **AC015 Fuel pump relay** fault finding check first, because a fuel pump relay fault can cause this fault to occur.
	Using parameter **PR071 Computer supply voltage**, check that the battery voltage is not below 11 V. Switch off the ignition and wait for dialogue between the computer and the diagnostic tool to end, then switch on the ignition again to confirm the fault.

Check the **resistance of injector 6**.
Replace the injector if the resistance is not 15 Ω ± 0.8 Ω at 20˚C.

While the starter motor is operating, check for **12 V** on injector 6.
If necessary, repair the line up to the fuel pump relay.

Check the **insulation, continuity and the absence of interference resistance** of the following connection:

Injection computer, connector B, track 98 → **Track 2 of injector 6**

Repair if necessary.

Note:
If all the injectors are faulty, check that the fuel pump relay is not defective.

AFTER REPAIR	Follow the instructions to confirm repair. Deal with any other faults. Clear the stored faults. Switch off the ignition and wait for an end of dialogue to confirm the clearance.

GETtheMANUALS.org

DF436 PRESENT OR STORED	DETECTION OF ENGINE MISFIRING

NOTES	**Priority for dealing with a combination of faults:** Firstly, deal with the following faults: **DF379 Cylinder 1 injector control,** **DF380 Cylinder 2 injector control,** **DF381 Cylinder 3 injector control,** **DF382 Cylinder 4 injector control,** **DF431 Cylinder 5 injector control,** **DF432 Cylinder 6 injector control,** if they are present or stored. If one or more of the following faults: **DF059 Combustion misfire in cylinder 1,** **DF060 Misfiring on cylinder 1;** **DF061 Misfiring on cylinder 1;** **DF062 Misfiring on cylinder 1;** **DF063 Misfiring on cylinder 1;** **DF064 Misfiring on cylinder 1;** are present or stored**,** deal with them separately. If none or all six of the above-mentioned faults occur, follow this fault finding procedure.

For each cylinder, check the:
– condition and connection of the injector,
– condition and type of spark plug,
– operation of the coil following fault procedure **DF345 Ignition coil circuit**,
– compression.
Repair if necessary.

Check the engine target.
Repair if necessary.

Check the fuel system:
– the condition of the fuel filter,
– the fuel flow rate and pressure.
– the condition of the fuel pump,
– the conformity of the fuel,
– the cleanliness of the tank.
Repair if necessary.

AFTER REPAIR	Follow the instructions to confirm repair. Deal with any other faults. Clear the stored faults. Switch off the ignition and wait for an end of dialogue to confirm the clearance.

GETtheMANUALS.org

DF439 PRESENT OR STORED	IDLE SPEED REGULATION 1.DEF: Lower end stop 2.DEF: Top end stop CO.0: Open circuit or short circuit to earth

NOTES	**Priority for dealing with a combination of faults:** Deal with fault **DF413 Motorised throttle** first if it is present and check the computer earth lines on tracks **118** and **121** using procedure **ALP 1 (see ALPs)**. Deal with any present faults relating to the motorised throttle or the accelerator pedal.

Check that status **ET051: Throttle stop programming** is **DONE** and that status **ET278: Throttle position: no load** is recognised and ACTIVE.

AFTER REPAIR	Follow the instructions to confirm repair. Deal with any other faults. Clear the stored faults. Switch off the ignition and wait for an end of dialogue to confirm the clearance.

GETtheMANUALS.org

DF448 PRESENT OR STORED	UPSTREAM OXYGEN SENSOR NO. 1 CO: Open circuit CC.0: Short circuit to earth CO.1: Short circuit or open circuit to + 12 V 1.DEF: Inconsistency of the signal

NOTES	None.

Check the **connection and condition of upstream oxygen sensor connector no. 1**. Repair if necessary.
Make sure that there is **no air intake**.
If the vehicle is used frequently in town, **decoke the engine.**
Check **the insulation, continuity and the absence of interference resistance** of the following connections: **Injection computer, connector A, track 78** → **Track 4 of the oxygen sensor** **Injection computer, connector A, track 59** → **Track 1 of the oxygen sensor** Repair if necessary.
Replace the oxygen sensor if necessary.

AFTER REPAIR	Follow the instructions to confirm repair. Deal with any other faults. Clear the stored faults. Switch off the ignition and wait for an end of dialogue to confirm the clearance.

GETtheMANUALS.org

DF449 PRESENT OR STORED	UPSTREAM OXYGEN SENSOR NO. 2 CO: Open circuit CC.0: Short circuit to earth CO.1: Short circuit or open circuit to + 12 V 1.DEF: Inconsistency of the signal

NOTES	None.

Check the **connection and condition of upstream oxygen sensor connector no. 2**. Repair if necessary.
Make sure that there is **no air intake**.
If the vehicle is used frequently in town, **decoke the engine.**
Check **the insulation, continuity and the absence of interference resistance** of the following connections: **Injection computer, connector A, track 79** → **Track 4 of the oxygen sensor** **Injection computer, connector A, track 60** → **Track 1 of the oxygen sensor** Repair if necessary.
Replace the oxygen sensor if necessary.

AFTER REPAIR	Follow the instructions to confirm repair. Deal with any other faults. Clear the stored faults. Switch off the ignition and wait for an end of dialogue to confirm the clearance.

GETtheMANUALS.org

DF450 PRESENT OR STORED	DOWNSTREAM OXYGEN SENSOR NO. 1 CO.0: Open circuit or short circuit to earth CO.1: Short circuit or open circuit to + 12 V 1.DEF: Inconsistency of the signal

NOTES	None.

Check the **connection and condition of downstream oxygen sensor connector no. 1**.
Repair if necessary.

Make sure that there is **no air intake**.

If the vehicle is used frequently in town, **decoke the engine.**

Check **the insulation, continuity and the absence of interference resistance** of the following connections:

Injection computer, connector A, track 76 → **Track 4 of the oxygen sensor**

Injection computer, connector A, track 57 → **Track 1 of the oxygen sensor**

Repair if necessary.

Replace the oxygen sensor if necessary.

AFTER REPAIR	Follow the instructions to confirm repair. Deal with any other faults. Clear the stored faults. Switch off the ignition and wait for an end of dialogue to confirm the clearance.

GETtheMANUALS.org

DF451 PRESENT OR STORED	DOWNSTREAM OXYGEN SENSOR NO. 2 CO.0: Open circuit or short circuit to earth CO.1: Short circuit or open circuit to + 12 V 1.DEF: Inconsistency of the signal

NOTES	None.

Check the **connection and condition of downstream oxygen sensor connector no. 2**.
Repair if necessary.

Make sure that there is **no air intake**.

If the vehicle is used frequently in town, **decoke the engine.**

Check **the insulation, continuity and the absence of interference resistance** of the following connections:

Injection computer, connector A, track 77 → **Track 4 of the oxygen sensor**

Injection computer, connector A, track 58 → **Track 1 of the oxygen sensor**

Repair if necessary.

Replace the oxygen sensor if necessary.

AFTER REPAIR	Follow the instructions to confirm repair. Deal with any other faults. Clear the stored faults. Switch off the ignition and wait for an end of dialogue to confirm the clearance.

GETtheMANUALS.org

DF466 PRESENT OR STORED	UPSTREAM OXYGEN SENSOR NO. 1 HEATING CO.1: Short circuit or open circuit to + 12 V CO.0: Open circuit or short circuit to earth

NOTES	None.

Check the **connection and condition of upstream oxygen sensor connector no. 1**. Repair if necessary.
Check the **oxygen sensor heater resistance**. Replace the sensor if the resistance is not approximately 4 Ω ± 1 Ω.
Check for **12 V on the oxygen sensor**. Repair the line if necessary.
Check the **insulation, continuity and the absence of interference resistance** of the following connection: **Injection computer, connector B, track 109** ⟶ **Track 2 of the oxygen sensor** Repair if necessary.

AFTER REPAIR	Follow the instructions to confirm repair. Deal with any other faults. Clear the stored faults. Switch off the ignition and wait for an end of dialogue to confirm the clearance.

GETtheMANUALS.org

DF467 PRESENT OR STORED	UPSTREAM OXYGEN SENSOR NO. 2 HEATING CO.1: Short circuit or open circuit to + 12 V CO.0: Open circuit or short circuit to earth

NOTES	None.

Check the **connection and condition of upstream oxygen sensor connector no. 2**. Repair if necessary.
Check the **oxygen sensor heater resistance**. Replace the sensor if the resistance is not approximately 4 Ω ± 1 Ω.
Check for **12 V on the oxygen sensor**. Repair the line if necessary.
Check the **insulation, continuity and the absence of interference resistance** of the following connection: **Injection computer, connector B, track 110 ⟶ track 2 of the oxygen sensor** Repair if necessary.

AFTER REPAIR	Follow the instructions to confirm repair. Deal with any other faults. Clear the stored faults. Switch off the ignition and wait for an end of dialogue to confirm the clearance.

GETtheMANUALS.org

DF468 PRESENT OR STORED	DOWNSTREAM OXYGEN SENSOR NO. 1 HEATING CO.1: Short circuit or open circuit to + 12 V CO.0: Open circuit or short circuit to earth

NOTES	None.

Check the **connection and condition of downstream oxygen sensor connector no. 1**.
Repair if necessary.

Check the **oxygen sensor heater resistance**.
Replace the sensor if the resistance is not approximately 4 Ω ± 1 Ω.

Check for **12 V on the oxygen sensor**.
Repair the line if necessary.

Check the **insulation, continuity and the absence of interference resistance** on the following connection:

Injection computer, connector B, track 101 ⟶ **Track 2 of the oxygen sensor**

Repair if necessary.

AFTER REPAIR	Follow the instructions to confirm repair. Deal with any other faults. Clear the stored faults. Switch off the ignition and wait for an end of dialogue to confirm the clearance.

GETtheMANUALS.org

DF469 PRESENT OR STORED	DOWNSTREAM OXYGEN SENSOR NO. 2 HEATING CO.1: Short circuit or open circuit to + 12 V CO.0: Open circuit or short circuit to earth

NOTES	None.

Check the **connection and condition of downstream oxygen sensor connector no. 2**.
Repair if necessary.

Check the **oxygen sensor heater resistance**.
Replace the sensor if the resistance is not approximately 4 Ω ± 1 Ω.

Check for **12 V on the oxygen sensor**.
Repair the line if necessary.

Check the **insulation, continuity and the absence of interference resistance** of the following connection:

Injection computer, connector B, track 102 ⟶ **Track 2 of the oxygen sensor**

Repair if necessary.

AFTER REPAIR	Follow the instructions to confirm repair. Deal with any other faults. Clear the stored faults. Switch off the ignition and wait for an end of dialogue to confirm the clearance.

GETtheMANUALS.org

DF470 PRESENT OR STORED	BANK A FUEL SUPPLY

NOTES	None.

– Check the fitting and condition of the air filter.
– Check the condition of the air inlet circuit.

Check:
– the fuel filter,
– the condition of the fuel pump,
– the fuel flow rate and pressure,
– the condition of the fuel pressure regulator,
– the condition of the fuel circuit pipes,
– the condition of the injector rails,
– the condition of the injectors (leaks, etc.),
– the cleanliness of the tank.
Repair or replace defective component(s) if necessary.

AFTER REPAIR	Follow the instructions to confirm repair. Deal with any other faults. Clear the stored faults. Switch off the ignition and wait for an end of dialogue to confirm the clearance.

GETtheMANUALS.org

DF471 PRESENT OR STORED	BANK B FUEL SUPPLY

NOTES	None.

– Check the fitting and condition of the air filter.
– Check the condition of the air inlet circuit.

Check:
– the fuel filter,
– the condition of the fuel pump,
– the fuel flow rate and pressure,
– the condition of the fuel pressure regulator,
– the condition of the fuel circuit pipes,
– the condition of the injector rails,
– the condition of the injectors (leaks, etc.),
– the cleanliness of the tank.
Repair or replace defective component(s) if necessary.

AFTER REPAIR	Follow the instructions to confirm repair. Deal with any other faults. Clear the stored faults. Switch off the ignition and wait for an end of dialogue to confirm the clearance.

GETtheMANUALS.org

DF479 PRESENT OR STORED	THROTTLE VALVE SERVO

NOTES	**Priority for dealing with a combination of faults:** If fault **DF439: Idle speed regulation** is present, deal with it first. Using parameter **PR071 Computer supply voltage**, check that the battery voltage is not below 11 V. Switch off the ignition and wait for dialogue between the computer and the diagnostic tool to end, then switch on the ignition again to confirm the fault.

Check the **connection and condition of the connector** of the motorised throttle safety relay. Replace the connector if necessary.

Check for **+ 12 V** on track 5 of the motorised throttle safety relay. Repair the line up to the fuse if necessary.

With the ignition switched on, check for + 12 V on track 1 of the motorised throttle safety relay. Repair the line up to the main relay if necessary.

Check **the continuity on tracks 42 and 40** of the motorised throttle safety relay. Replace the relay if necessary.

Check **the insulation, continuity and the absence of interference resistance** of the following connections:

Injection computer, connector A, track 5 → **Motorised throttle safety relay track 38**

Injection computer, connector A, track 63 → **Motorised throttle safety relay, track 40**

Repair if necessary.

AFTER REPAIR	Follow the instructions to confirm repair. Deal with any other faults. Clear the stored faults. Switch off the ignition and wait for an end of dialogue to confirm the clearance.

GETtheMANUALS.org

DF487 PRESENT OR STORED	THROTTLE STOP PROGRAMMING

NOTES	**Priority for dealing with a combination of faults:** If fault **DF328: Throttle potentiometer circuit** is present, deal with it first.

Throttle stop programming has not been completed. The fault may be present following an inconsistency in the throttle position.
Carry out throttle stop programming (see **Configurations and programming**).

AFTER REPAIR	Follow the instructions to confirm repair. Deal with any other faults. Clear the stored faults. Switch off the ignition and wait for an end of dialogue to confirm the clearance.

GETtheMANUALS.org

DF491 PRESENT OR STORED	ELECTRONIC STABILITY PROGRAM (ESP) 1.DEF: No signal

NOTES	**Priority for dealing with a combination of faults:** If faults **DF333 Injection → automatic transmission connection and DF009 Pedal potentiometer circuit gang 2** are also present, check the computer earth lines on **tracks 115 and 116** using the **ALP 1 (see Fault finding charts) procedure**. Using parameter **PR071 Computer supply voltage**, check that the battery voltage is not below 11 V. Switch off the ignition and wait for dialogue between the computer and the diagnostic tool to end, then switch on the ignition again to confirm the fault.

Run a multiplex network test (see **88B, Multiplex network**).
Carry out fault finding on ABS and ESP system (see **38C, ABS**).

AFTER REPAIR	Follow the instructions to confirm repair. Deal with any other faults. Clear the stored faults. Switch off the ignition and wait for an end of dialogue to confirm the clearance.

GETtheMANUALS.org

DF502 PRESENT OR STORED	CRUISE CONTROL OR SPEED LIMITER BUTTON 1.DEF: Inconsistency of the signal

NOTES	Using parameter **PR071 Computer supply voltage**, check that the battery voltage is not below 11 V. Switch off the ignition and wait for dialogue between the computer and the diagnostic tool to end, then switch on the ignition again to confirm the fault.

Check **the connection and condition** of the cruise control/speed limiter switch connector. Repair if necessary.

Check **the insulation, continuity and the absence of interference resistance** of the following connections:

Injection computer, connector A, track 29 → **Speed limiter track switch**

Injection computer, connector A, track 30 → **Cruise control track switch**

Repair if necessary.

If everything is correct, replace the switch.

AFTER REPAIR	Follow the instructions to confirm repair. Deal with any other faults. Clear the stored faults. Switch off the ignition and wait for an end of dialogue to confirm the clearance.

GETtheMANUALS.org

DF508 PRESENT OR STORED	MOTORISED THROTTLE VALVE CONTROL 1.DEF: Throttle position error

NOTES	Switch off the ignition and wait for an end of dialogue to confirm the fault.

Check the **connection and condition of the motorised throttle connector**.
Replace the connector if necessary.

Check the condition of the motorised throttle body and that nothing is mechanically impeding the throttle movement.
Repair if necessary.

Check **the insulation, continuity and the absence of interference resistance** of the following connections:

Injection computer, connector A, track 24 → **Track 1 of the throttle potentiometer**

Injection computer, connector A, track 19 → **Track 2 of the throttle potentiometer**

Injection computer, connector A, track 20 → **Track 4 of the throttle potentiometer**

Injection computer, connector A, track 23 → **Track 5 of the throttle potentiometer**

Injection computer, connector A, track 62 → **Track 6 of the motorised throttle valve**

Injection computer, connector A, track 1 → **Track 3 of the motorised throttle valve**

Repair if necessary.

Using the conformity check, check **parameters PR538 Measured throttle voltage gang 2 and PR539 Measured throttle voltage gang 1** for throttle potentiometer output voltages.
Replace if not correct.

After replacing the throttle valve, program the air path. (See Replacement of components, Configurations and programming)

AFTER REPAIR	Follow the instructions to confirm repair. Deal with any other faults. Clear the stored faults. Switch off the ignition and wait for an end of dialogue to confirm the clearance.

GETtheMANUALS.org

DF536 PRESENT OR STORED	CANISTER SOLENOID VALVE CONTROL CIRCUIT CO.0: Open circuit or short circuit to earth CO.1: Short circuit or open circuit to + 12 V

NOTES	If the fuel pump does not operate, run the **AC015 Fuel pump relay** fault finding check first, because a fuel pump relay fault can cause this fault to occur. Using parameter **PR071 Computer supply voltage**, check that the battery voltage is not below 11 V. Switch off the ignition and wait for dialogue between the computer and the diagnostic tool to end, then switch on the ignition again to confirm the fault.

Check the **connection and condition of the canister bleed solenoid valve connector**.
Replace the connector if necessary.

Check the **resistance of the fuel vapour absorber bleed solenoid valve**.
Replace the valve if the resistance is not 8 Ω ± 0.4 Ω.

With the starter operating, check for **12 V on track A1 of the fuel vapour absorber bleed solenoid valve**.
If necessary, repair the line up to the fuel pump relay.

Check the **insulation, continuity and the absence of interference resistance** of the following connection:

Injection computer, connector B, track 89 ⟶ **Track 2 of the canister bleed solenoid valve**

Repair if necessary.

Using the conformity check, check **parameters PR538 Measured throttle voltage gang 2 and PR539 Measured throttle voltage gang 1** for throttle potentiometer output voltages.
Replace if not correct.

AFTER REPAIR	Follow the instructions to confirm repair. Deal with any other faults. Clear the stored faults. Switch off the ignition and wait for an end of dialogue to confirm the clearance.

GETtheMANUALS.org

DF567 PRESENT OR STORED	COMPUTER 1.DEF: Internal command module: ROM (Read Only Memory) error

NOTES	Using parameter **PR071 Computer supply voltage**, check that the battery voltage is not below 11 V. Switch off the ignition and wait for dialogue between the computer and the diagnostic tool to end, then switch on the ignition again to confirm the fault.

Use the following procedure:
– Switch on the ignition.
– Clear the stored fault on the injection computer using the diagnostic tool.
– Switch off the ignition and wait for dialogue between the computer and the diagnostic tool to end.
– Switch on the ignition and establish dialogue with the injection computer.
If the computer fault is still present, contact the Techline.

AFTER REPAIR	Follow the instructions to confirm repair. Deal with any other faults. Clear the stored faults. Switch off the ignition and wait for an end of dialogue to confirm the clearance.

GETtheMANUALS.org

DF579 PRESENT OR STORED	POWER-ASSISTED STEERING PRESSURE SENSOR CIRCUIT 1.DEF: Open circuit or short circuit CO.0: Open circuit or short circuit to earth

NOTES	Using parameter **PR071 Computer supply voltage**, check that the battery voltage is not below 11 V. Switch off the ignition and wait for dialogue between the computer and the diagnostic tool to end, then switch on the ignition again to confirm the fault.

Check **the condition and the connection** of the power-assisted steering pressure sensor connector.
Repair if necessary.

Check **the insulation, continuity and the absence of interference resistance** of the following connections:

- **Injection computer, connector A, track 62** → **Track A1 of the power-assisted steering pressure sensor**
- **Injection computer, connector A, track 18** → **Track A2 of the power-assisted steering pressure sensor**
- **Injection computer, connector A, track 43** → **Track A3 of the power-assisted steering pressure sensor**

Repair if necessary.

If everything is correct, replace the sensor.

AFTER REPAIR	Follow the instructions to confirm repair. Deal with any other faults. Clear the stored faults. Switch off the ignition and wait for an end of dialogue to confirm the clearance.

GETtheMANUALS.org

DF588 PRESENT OR STORED	CAMSHAFT No. 1 DEPHASER CONTROL

NOTES	Using parameter **PR071 Computer supply voltage**, check that the battery voltage is not below 11 V. Switch off the ignition and wait for dialogue between the computer and the diagnostic tool to end, then switch on the ignition again to confirm the fault.

With the ignition on, check for **12 V on track A2 of the camshaft dephaser solenoid valve**.
Repair if necessary.

Check the **insulation, continuity and the absence of interference resistance** of the following connection:

Injection computer, connector B, track 103 ⟶ **Track 2 of the camshaft dephaser solenoid valve**

Repair if necessary.

Note:
If a solenoid valve remains jammed open, the engine idle speed will probably be unstable.

AFTER REPAIR	Follow the instructions to confirm repair. Deal with any other faults. Clear the stored faults. Switch off the ignition and wait for an end of dialogue to confirm the clearance.

GETtheMANUALS.org

DF589 PRESENT OR STORED	CAMSHAFT No. 2 DEPHASER CONTROL

NOTES	Using parameter **PR071 Computer supply voltage**, check that the battery voltage is not below 11 V. Switch off the ignition and wait for dialogue between the computer and the diagnostic tool to end, then switch on the ignition again to confirm the fault.

With the ignition on, check for **12 V on track A2 of the camshaft dephaser solenoid valve**.
Repair if necessary.

Check the **insulation, continuity and the absence of interference resistance** of the following connection:

Injection computer, connector B, track 104 → **Track 2 of the camshaft dephaser solenoid valve, bank B**

Repair if necessary.

Note:
If a solenoid valve remains jammed open, the engine idle speed will probably be unstable.

AFTER REPAIR	Follow the instructions to confirm repair. Deal with any other faults. Clear the stored faults. Switch off the ignition and wait for an end of dialogue to confirm the clearance.

GETtheMANUALS.org

DF592 PRESENT OR STORED	No.1 CAMSHAFT SENSOR CIRCUIT 1.DEF: Inconsistency of the signal 2.DEF: No signal

NOTES	**Conditions for applying the fault finding procedure to stored faults:** The fault is declared present when the engine is running.
	Special note: OBD warning light lit: injection in defect mode.
	Use the Wiring Diagrams Technical Note, ESPACE 4 ph I / II / VELSATIS ph I / II.

Check that the camshaft sensor is correctly pushed into its housing.
Check that the camshaft sensor and its connectors are **clean** and **in good condition**.
Repair if necessary.

Check that the injection computer connector is clean and in good condition.
Repair if necessary.

With the ignition on, check for a voltage of between **4.5 and 6 volts** on connection **3FB** of the camshaft position sensor, **component number 1305**.
Repair if necessary.

Use the universal bornier to check the **insulation and continuity** of the following connections:
Between the injection computer, **component code 120** and the camshaft position sensor, **component code 1305**.
– connection code 3UY
– connection code 3FB
– connection code 3UM
If there is a repair procedure (see **Technical Note 6015A, Repairing electrical wiring, Wiring: Precautions for repair**), repair the wiring, otherwise replace the wiring.

If the fault is still present, replace the camshaft sensor.

If the problem is still present, contact the Techline.

AFTER REPAIR	Follow the instructions to confirm repair. Deal with any other faults. Clear the stored faults. Switch off the ignition and wait for an end of dialogue to confirm the clearance.

GETtheMANUALS.org

DF593 PRESENT OR STORED	CAMSHAFT SENSOR CIRCUIT No.2 1.DEF: Inconsistency of the signal 2.DEF: No signal

NOTES	**Conditions for applying the fault finding procedure to stored faults:** The fault is declared present when the engine is running.
	Special note: OBD warning light lit: injection in defect mode.
	Use the Wiring Diagrams Technical Note, ESPACE 4 ph I / II / VELSATIS ph I / II.

Check that the camshaft sensor is correctly pushed into its housing.
Check that the camshaft sensor and its connectors are **clean** and **in good condition**.
Repair if necessary.

Check that the injection computer connector is clean and in good condition.
Repair if necessary.

With the ignition on, check for a voltage of between **4.5 and 6 volts** on connection **3FB** of the camshaft position sensor, **component number 1306**.
Repair if necessary.

Use the universal bornier to check the **insulation and continuity** of the following connections:
Between the injection computer, **component code 120** and the camshaft position sensor, **component code 1306**.
– connection code 3VA
– connection code 3FB
– connection code 3UP
If there is a repair procedure (see **Technical Note 6015A, Repairing electrical wiring, Wiring: Precautions for repair**), repair the wiring, otherwise replace the wiring.

If the fault is still present, replace the camshaft sensor.

If the problem is still present, contact the Techline.

AFTER REPAIR	Follow the instructions to confirm repair. Deal with any other faults. Clear the stored faults. Switch off the ignition and wait for an end of dialogue to confirm the clearance.

GETtheMANUALS.org

DF594 PRESENT OR STORED	ROW 1 RICHNESS REGULATION 1.DEF: Inconsistency of the signal

NOTES	**Priority for dealing with a combination of faults:** Firstly, deal with the following faults: **DF056 Air flow sensor circuit,** **DF379 Cylinder 1 injector control,** **DF381 Cylinder 3 injector control,** **DF431 Cylinder 5 injector control,** **DF448 Upstream oxygen sensor no. 1;** **DF470 Fuel supply row A** and/or **DF471 Fuel supply row B** if they are present. Using parameter **PR071 Computer supply voltage**, check that the battery voltage is not below 11 V. Switch off the ignition and wait for dialogue between the computer and the diagnostic tool to end, then switch on the ignition again to confirm the fault.

Check that there are no **air leaks on the exhaust system**.
If the vehicle is driven frequently in town, **decoke the engine.**
Check the oxygen sensors using the fault procedures: **DF448 Upstream oxygen sensor no. 1;** **DF450 Downstream oxygen sensor no. 1;** **DF466 Upstream oxygen sensor no. 1 heating;** **DF468 Downstream oxygen sensor no. 1 heating.**
If the fault has still not been solved, deal with the other faults and then proceed to the conformity check.

AFTER REPAIR	Follow the instructions to confirm repair. Deal with any other faults. Clear the stored faults. Switch off the ignition and wait for an end of dialogue to confirm the clearance.

GETtheMANUALS.org

DF595 PRESENT OR STORED	ROW 2 RICHNESS REGULATION 1.DEF: Inconsistency of the signal

NOTES	**Priority for dealing with a combination of faults:** Firstly, deal with the following faults: **DF589 Camshaft no. 2 dephaser control;** **DF380 Cylinder 2 injector control;** **DF382 Cylinder 4 injector control;** **DF432 Cylinder 6 injector control;** **DF448 Upstream oxygen sensor no. 1;** **DF470 Fuel supply row A** and/or **DF471 Fuel supply row B** if they are present.

Check that there are no **air leaks on the exhaust system**.
If the vehicle is driven frequently in town, **decoke the engine**.
Check the oxygen sensors using the fault procedures: **DF449 Upstream oxygen sensor no. 2;** **DF451 Downstream oxygen sensor no. 2;** **DF467 Upstream oxygen sensor no. 2 heating;** **DF469 Downstream oxygen sensor no. 2 heating.**
If the fault has still not been solved, deal with the other faults and then proceed to the conformity check.

AFTER REPAIR	Follow the instructions to confirm repair. Deal with any other faults. Clear the stored faults. Switch off the ignition and wait for an end of dialogue to confirm the clearance.

GETtheMANUALS.org

DF596 PRESENT OR STORED	DETECTION OF OVERHEATING

NOTES	Indicates engine overheating or a coolant temperature fault. When the fault is present, the engine will not exceed **2000 rpm**.

Check the coolant temperature sensor circuit using fault procedure **DF002 Air temperature sensor circuit**.
Check the condition of the cooling system and run the engine until the fan starts to operate to see if the fault recurs.

AFTER REPAIR	Follow the instructions to confirm repair. Deal with any other faults. Clear the stored faults. Switch off the ignition and wait for an end of dialogue to confirm the clearance.

GETtheMANUALS.org

DF610 PRESENT OR STORED	FAULT ON ONE OF THE 2 CRUISE CONTROL/SPEED LIMITER BRAKE CONTACTS 1.DEF: Fault on one of the two brake pedal contacts

NOTES	When running this fault finding check, the ABS/ESP computer must not be faulty. **Priority for dealing with a combination of faults:** Deal with fault **DF116 Multiplex network** first if it is present. Using parameter **PR071 Computer supply voltage**, check that the battery voltage is not below 11 V. Switch off the ignition and wait for dialogue between the computer and the diagnostic tool to end, then switch on the ignition again to confirm the fault.
	Conditions for applying the fault finding procedure to stored faults: The fault is declared present: – with the engine running, – With the brake pedal depressed, – With cruise control ON.

Check that the pedal assembly is in good condition.
Check **the cleanliness** and **condition** of the dual-contact brake switch and its connections.
Repair if necessary.

Check the **operation of the brake pedal switch**.
Replace the switch if necessary.

Check the **insulation, continuity and the absence of interference resistance** of the following connection:

Injection computer, connector A, track 11 ⟶ **Brake pedal switch**

Repair if necessary.

Check the connection between the brake pedal sensor and the Anti-lock braking system computer (see **38C, Anti-lock braking system**).

AFTER REPAIR	Follow the instructions to confirm repair. Deal with any other faults. Clear the stored faults. Switch off the ignition and wait for an end of dialogue to confirm the clearance.

GETtheMANUALS.org

DF611 PRESENT OR STORED	FAULT ON THE 2 CRUISE CONTROL/SPEED LIMITER BRAKE CONTACTS 1.DEF: Fault on both brake pedal contacts

NOTES	When running this fault finding check, the ABS/ESP computer must not be faulty. **Priority for dealing with a combination of faults:** Deal with fault **DF116 Multiplex network** first if it is present. Using parameter **PR071 Computer supply voltage**, check that the battery voltage is not below 11 V. Switch off the ignition and wait for dialogue between the computer and the diagnostic tool to end, then switch on the ignition again to confirm the fault.
	Conditions for applying the fault finding procedure to stored faults: The fault is declared present: – with the engine running, – With the brake pedal depressed, – With the cruise control ON with a cruising speed set.

Check that the pedal assembly is in good condition.
Check **the cleanliness** and **condition** of the dual-contact brake switch and its connections.
Repair if necessary.

Check the **operation of the brake pedal switch**.
Replace the switch if necessary.

Check the **insulation, continuity and the absence of interference resistance** of the following connection:

Injection computer, connector A, track 11 ⟶ **Brake pedal switch**

Repair if necessary.

Check the connection between the brake pedal sensor and the Anti-lock braking system computer (see **38C, Anti-lock braking system**).

AFTER REPAIR	Follow the instructions to confirm repair. Deal with any other faults. Clear the stored faults. Switch off the ignition and wait for an end of dialogue to confirm the clearance.

GETtheMANUALS.org

DF648 PRESENT OR STORED	COMPUTER 1.DEF: Fault in EEPROM

NOTES	Using parameter **PR071 Computer supply voltage**, check that the battery voltage is not below 11 V. Switch off the ignition and wait for dialogue between the computer and the diagnostic tool to end, then switch on the ignition again to confirm the fault.

Use the following procedure:
– Switch on the ignition.
– Clear the stored fault on the injection computer using the diagnostic tool.
– Switch off the ignition and wait for dialogue between the computer and the diagnostic tool to end.
– Switch on the ignition and establish dialogue with the injection computer.
If the computer fault is still present, contact the Techline.

AFTER REPAIR	Follow the instructions to confirm repair. Deal with any other faults. Clear the stored faults. Switch off the ignition and wait for an end of dialogue to confirm the clearance.

GETtheMANUALS.org

DF989 PRESENT OR STORED	CATALYTIC PRE-CONVERTER No. 1

NOTES	**Apply this fault finding procedure whether the fault is present or stored.** Indicates lack of correlation between signals before and after the catalytic pre-converter, received by the two oxygen sensors on the front row.

Check that there are no **air leaks on the exhaust system**. Repair if necessary.
Visually check the condition of the catalytic pre-converter. A deformity may be causing it to malfunction. **Visually check for signs of thermal shock.**
A warm catalytic pre-converter may be damaged if it comes into contact with cold water.
Check that there has not been any **excessive consumption of oil** or **coolant**. Ask the customer if he has used an additive or other products of this kind. Such products can block the catalytic pre-converter, and damage its short or long term performance.
Check if the engine has been misfiring. This could damage the catalytic pre-converter.
Check the **driving noise**during a road test.
If the cause of the damage is identified, the catalytic pre-converter may be replaced. **If the catalytic pre-converter is replaced without finding the cause, the new catalytic pre-converter may be damaged very quickly.**

AFTER REPAIR	Follow the instructions to confirm repair. Deal with any other faults. Clear the stored faults. Switch off the ignition and wait for an end of dialogue to confirm the clearance.

GETtheMANUALS.org

DF990 PRESENT OR STORED	CATALYTIC PRE-CONVERTER No. 2

NOTES	**Apply this fault finding procedure whether the fault is present or stored.** Indicates lack of correlation between signals before and after the catalytic pre-converter, received by the two oxygen sensors on the back row.

Check that there are no **air leaks on the exhaust system**. Repair if necessary.
Visually check the condition of the catalytic pre-converter. A deformity may be causing it to malfunction. **Visually check for signs of thermal shock.**
A warm catalytic pre-converter may be damaged if it comes into contact with cold water.
Check that there has not been any **excessive consumption of oil** or **coolant**. Ask the customer if he has used an additive or other products of this kind. Such products can block the catalytic pre-converter, and damage its short or long term performance.
Check if the engine has been misfiring. This could damage the catalytic pre-converter.
Check the **driving noise**during a road test.
If the cause of the damage is identified, the catalytic pre-converter may be replaced. **If the catalytic pre-converter is replaced without finding the cause, the new catalytic pre-converter may be damaged very quickly.**

AFTER REPAIR	Follow the instructions to confirm repair. Deal with any other faults. Clear the stored faults. Switch off the ignition and wait for an end of dialogue to confirm the clearance.

GETtheMANUALS.org

NOTES	Only carry out a conformity check after a **complete check** with the **diagnostic tool**. The values indicated in this conformity check are given as examples. **Application conditions:** Engine stopped, **ignition on**.

MAIN SCREEN

Order	Function	Parameter or Status checked or Action		Display and Notes	Fault finding
1	**Battery voltage**	**ET001:**	+ After ignition computer feed	**PRESENT**	Check the battery voltage and the charging circuit.
		PR071:	Computer feed voltage	**11.8 V < X < 13.8 V**	
2	**Engine**	**PR145:**	Engine speed	**0 rpm**	In the event of a fault, consult the interpretation of fault **DF154 Engine speed sensor circuit**.
3	**Vehicle speed**	**PR155:**	Vehicle speed	**0 mph**	If there is a fault, refer to the interpretation for fault **DF090 Vehicle speed sensor circuit**.

GETtheMANUALS.org

NOTES	Only check conformity after a **full check** with the diagnostic tool. The values indicated in this conformity check are given as examples. **Application conditions:** Engine stopped, **ignition on**.

ENGINE MANAGEMENT FUNCTION

Sub-function: Air circulation (turbocharging/inlet)

Order	Function	Parameter or Status checked or Action		Display and Notes	Fault finding
1	Atmospheric pressure sensor	**PR079:**	Atmospheric pressure sensor voltage	**4.85 V ± 0.05 V**	In the event of a fault, consult the interpretation of fault **DF200 Atmospheric pressure sensor**.
2	Air temperature sensor	**PR058:**	Air temperature	**X = Temperature under bonnet ± 3 ˚C**	In the event of a fault, consult the interpretation of fault **DF002 Air temperature sensor circuit**.
	Coolant temperature sensor	**PR064:**	Coolant temperature	**X = Coolant temperature ± 3 ˚C**	In the event of a fault, refer to the interpretation of **DF001 Coolant temperature sensor circuit**.
3	Flow sensor	**PR146:**	Inlet air flow	**0 g/s**	In the event of a fault, consult the interpretation of parameter **DF056 Air flow sensor circuit**.

GETtheMANUALS.org

NOTES	Only check conformity after a **full check** with the diagnostic tool. The values indicated in this conformity check are given as examples. **Application conditions:** Engine stopped, **ignition on**.

Sub-function: fuel circuit

Order	Function	Parameter or Status checked or Action		Display and Notes	Fault finding
1	Idling speed regulation	**ET054:**	Idling speed regulation	**INACTIVE**	In the event of a fault (no load not recognised), refer to interpretation of faults **DF008 Pedal potentiometer circuit gang 1** and **DF009 Pedal potentiometer circuit gang 2**.
2		**PR190:**	engine idling speed setpoint	**800 rpm ± 25 rpm**	
3	Richness regulation	**PR546:**	row 1 richness regulation	**100%**	In the event of a fault, refer to interpretation of faults **DF448 Upstream oxygen sensor no. 1, DF449 Upstream oxygen sensor no. 2, DF450 Downstream oxygen sensor no. 1 and DF451 Downstream oxygen sensor no. 2**.
		PR547:	row 2 richness regulation	**100%**	
		PR550:	row 1 richness regulation adaptive program	**100%**	
		PR551:	row 2 richness regulation adaptive program	**100%**	
4	Duration of injection	**PR619:**	duration of injection row 1	**2 ms ± 0.1 ms (reference values)**	
		PR620:	duration of injection row 2	**2 ms ± 0.1 ms (reference values)**	
5	Fuel pump	**AC015:**	fuel pump relay	The pump should be heard operating.	In the event of a fault, refer to interpretation of fault **DF085 Fuel pump relay control circuit**.

GETtheMANUALS.org

NOTES	Only check conformity after a **full check** with the diagnostic tool. The values indicated in this conformity check are given as examples. **Application conditions:** Engine stopped, **ignition on**.

Sub-function: driver parameters

Order	Function	Parameter or Status checked or Action		Display and Notes	Fault finding
1	Throttle position	**ET051:**	programming throttle stops	**PERFORMED**	In the event of a fault, consult the interpretation of **DF487 Throttle stop programming**.
		PR539:	measured throttle voltage gang 1	**0.5 V < X < 0.72 V**	In the event of a fault, consult interpretation of faults **DF328 Throttle potentiometer circuit, DF413 Motorised throttle, DF479 Throttle valve servo and DF508 Motorised throttle control**.
		PR538:	measured throttle voltage gang 2	**0.5 V < X < 0.72 V**	
		PR568:	pedal position gang 1	**X < 2%**	
		PR569:	pedal position gang 2	**X < 2%**	
		PR429:	measured throttle position	**X < 2%**	
		AC193:	variable inlet solenoid valve	The variable inlet solenoid valve should operate.	

GETtheMANUALS.org

NOTES	Only check conformity after a **full check** with the diagnostic tool. The values indicated in this conformity check are given as examples. **Application conditions:** Engine stopped, **ignition on**.

Sub-function: ignition/preheating

Order	Function	Parameter or Status checked or Action	Display and Notes	Fault finding
1	Richness regulation	**ET533:** upstream oxygen sensor no. 1 heating	**INACTIVE**	In the event of a fault, consult faults **DF466 Upstream oxygen sensor no. 1 heating, DF467 Upstream oxygen sensor no. 2 heating, DF468 Downstream oxygen sensor no. 1 heating and DF469 Downstream oxygen sensor no. 2 heating**.
		ET534: upstream oxygen sensor no. 2 heating	**INACTIVE**	
		ET535: downstream oxygen sensor no. 1 heating	**INACTIVE**	
		ET536: downstream oxygen sensor no. 2 heating	**INACTIVE**	
		PR580: upstream oxygen sensor no. 1	**20 mV < X < 800 mV**	In the event of a fault, consult faults **DF448 Upstream oxygen sensor no. 1, DF449 Upstream oxygen sensor no. 2, DF450 Downstream oxygen sensor no. 1 and DF451 Downstream oxygen sensor no. 2**.
		PR582: upstream oxygen sensor no. 2	**20 mV < X < 800 mV**	
		PR581: downstream oxygen sensor no. 1	**20 mV < X < 800 mV**	
		PR583: downstream oxygen sensor no. 2	**20 mV < X < 800 mV**	
		AC176: downstream oxygen sensor heaters	The sensors must be supplied by the heating circuit and heater.	In the event of a fault, consult faults **DF468 Downstream oxygen sensor no. 1 heating** and **DF469 Downstream oxygen sensor no. 2 heating**.

GETtheMANUALS.org

NOTES	Only check conformity after a **full check** with the diagnostic tool. The values indicated in this conformity check are given as examples. **Application conditions:** Engine stopped, **ignition on**.

Sub-function: emission control/OBD

Order	Function	Parameter or Status checked or Action		Display and Notes	Fault finding
1	Richness regulation	ET348:	sensor fault finding complete	YES NO	In the event of a fault, consult faults **DF448 Upstream oxygen sensor no. 1, DF449 Upstream oxygen sensor no. 2, DF450 Downstream oxygen sensor no. 1 and DF451 Downstream oxygen sensor no. 2**.
		ET533:	upstream oxygen sensor no. 1 heating	INACTIVE	In the event of a fault, consult faults **DF466 Upstream oxygen sensor no. 1 heating, DF467 Upstream oxygen sensor no. 2 heating, DF468 Downstream oxygen sensor no. 1 heating and DF469 Downstream oxygen sensor no. 2 heating**.
		ET534:	upstream oxygen sensor no. 2 heating	INACTIVE	
		ET535:	downstream oxygen sensor no. 1 heating	INACTIVE	
		ET536:	downstream oxygen sensor no. 2 heating	INACTIVE	
		ET541:	O2 sensor heating OBD fault finding	DONE NOT DONE	
2	Fuel vapour absorber	ET540:	canister bleed OBD fault finding	DONE NOT DONE	In the event of a fault, consult **DF536 Canister solenoid valve control circuit**.
		ET050:	canister bleed control	ACTIVE INACTIVE	
		PR102:	canister bleed solenoid valve OCR	X < 0.5%	

GETtheMANUALS.org

NOTES	Only check conformity after a **full check** with the diagnostic tool. The values indicated in this conformity check are given as examples. **Application conditions:** Engine stopped, **ignition on**.

Sub-function: Cruise control/speed limiter

Order	Function	Parameter or Status checked or Action		Display and Notes	Fault finding
1	**Faults (For Vdiag 10 only)**	**ET683:**	Fault on the 2 cruise control/ speed limiter brake contacts	**ABSENT PRESENT STORED**	In the event of a fault, consult the interpretation of fault **DF611 Fault on the 2 cruise control/ speed limiter brake contacts**.
		ET684:	Fault on one of the 2 cruise control/ speed limiter brake contacts	**ABSENT PRESENT STORED**	In the event of a fault, consult the interpretation of fault **DF610 Fault on one of the 2 cruise control/speed limiter brake contacts**.
		ET685:	Fault on cruise control or speed limiter button	**ABSENT PRESENT STORED**	In the event of a fault, consult the interpretation of fault **DF502 Cruise control/speed limiter button**.
		ET686:	Fault on cruise control/speed limiter selector switches on steering wheel	**ABSENT PRESENT STORED**	In the event of a fault, apply the interpretation of fault **DF106 cruise control/speed limiter selector function on the steering wheel**.
2	**Battery voltage**	**ET001:**	computer + after ignition feed	**PRESENT**	Check the battery voltage and the charging circuit.
3	**Cruise control/ speed limiter**	**ET042:**	cruise control/ speed limiter	**INACTIVE**	In the event of a fault, refer to the interpretation of status **ET042 Cruise control/speed limiter**.
4		**ET413:**	cruise control/ speed limiter function	**INCREASE DECREASE SUSPEND RESUME**	In the event of a fault, consult the interpretation of status **ET413 Cruise control/speed limiter function**.

GETtheMANUALS.org

NOTES	Only check conformity after a **full check** with the diagnostic tool. The values indicated in this conformity check are given as examples. **Application conditions:** Engine stopped, **ignition on**.

Sub-function: Cruise control/speed limiter (CONTINUED 1)

Order	Function	Parameter or Status checked or Action		Display and Notes	Fault finding
5	**Cruise control/ speed limiter (Except Vdiag 10)**	**ET415:**	Cruise control/ speed limiter deactivation	**STATUS 1:** Traction control request **STATUS 2:** Brake pedal depressed **STATUS 3:** Cruise control or speed limiter fault **STATUS 5:** Fault detected by injection computer **STATUS 6:** Vehicle speed invalid **STATUS 7:** Gear lever in neutral position **STATUS 8:** Vehicle speed invalid **STATUS 9:** Cancel button pressed **STATUS 4:** Engine-gearbox decoupling	**NONE**

GETtheMANUALS.org

NOTES	Only check conformity after a **full check** with the diagnostic tool. The values indicated in this conformity check are given as examples. **Application conditions:** Engine stopped, **ignition on**.

Sub-function: Cruise control/speed limiter (CONTINUED 2)

Order	Function	Parameter or Status checked or Action		Display and Notes	Fault finding
6	Cruise control/ speed limiter (For Vdiag 10 only)	ET556:	Driver deactivation of the cruise control/ speed limiter	STATUS 1 STATUS 2 STATUS 3 STATUS 5 STATUS 6	In the event of a fault, apply the interpretation of status **ET556 Driver deactivation of the cruise control/speed limiter**.
7		ET557:	deactivation by cruise control/speed limiter function	STATUS 1 STATUS 2 STATUS 3 STATUS 4	In the event of a fault, apply interpretation of status **ET557 Deactivation by cruise control/speed limiter function**.
8	Brake pedal	ET237:	brake pedal	DEPRESSED RELEASED	In the event of a fault, consult the interpretation for fault **DF411 Brake pedal sensor circuit**.
		ET215:	redundant brake pedal	DEPRESSED RELEASED	
9	Gear lever position	ET063:	park/neutral position	P/N NONE	In the event of a fault, carry out fault finding on the automatic transmission (see **23A, Automatic transmission**).

GETtheMANUALS.org

NOTES	Only check conformity after a **full check** with the diagnostic tool. The values indicated in this conformity check are given as examples. **Application conditions:** Engine stopped, **ignition on**.

Sub-function: Torque management

Order	Function	Parameter or Status checked or Action	Display and Notes	Fault finding
1	**Engine**	**PR145:** engine speed	**0 rpm**	In the event of a fault, consult the interpretation of fault **DF154 Engine speed sensor circuit**.
2	**Battery voltage**	**ET001:** computer + after ignition feed	**PRESENT** **ABSENT**	Check the battery voltage and the charging circuit.
3	**Engine**	**PR192:** engine torque map	**0 Nm**	In the event of a fault, apply the interpretation of fault **DF333 Injection → automatic transmission connection**.

GETtheMANUALS.org

NOTES	Only check conformity after a **full check** with the diagnostic tool. The values indicated in this conformity check are given as examples. **Application conditions:** Engine stopped, **ignition on**.

Sub-function: Cold loop

Order	Function	Parameter or Status checked or Action		Display and Notes	Fault finding
1	**Battery voltage**	**ET001:**	computer + after ignition feed	**PRESENT**	Check the battery voltage and the charging circuit.
2	**Air conditioning**	**ET018:**	climate control request	**YES** **NO**	In the event of a fault, carry out fault finding on the air conditioning system (**62A Air conditioning**).
3	**Cooling**	**ET144:**	high-speed fan unit relay control	**ACTIVE** **INACTIVE**	In the event of a fault, apply the interpretation of status **ET144 High-speed fan unit relay control**.
		ET143:	low-speed fan unit relay control	**ACTIVE** **INACTIVE**	In the event of a fault, apply the interpretation of status **ET143 Low-speed fan unit relay control**.
4	**Air conditioning**	**PR621:**	power authorised by the air conditioning compressor	**0 W**	In the event of a fault, carry out fault finding on the air conditioning system (**62A Air conditioning**).
5	**Cooling**	**AC154:**	low-speed fan assembly	**This command controls the fan unit at low speed.**	In the event of a fault, apply the interpretation of status **ET143 Low-speed fan unit relay control**.
		AC153:	high-speed fan assembly	**This command controls the fan unit at high speed.**	In the event of a fault, apply the interpretation of status **ET144 High-speed fan unit relay control**.

GETtheMANUALS.org

NOTES	Only check conformity after a **full check** with the diagnostic tool. The values indicated in this conformity check are given as examples. **Application conditions:** Engine stopped, **ignition on**.

Sub-function: Heating

Order	Function	Parameter or Status checked or Action		Display and Notes	Fault finding
1	Cooling	**PR164:**	coolant temperature	**Below 100 ˚C**	In the event of a fault, refer to the interpretation of **DF001 Coolant temperature sensor circuit**.
		ET538:	heating element management	**ACTIVE** **INACTIVE**	

GETtheMANUALS.org

NOTES	Only check conformity after a **full check** with the diagnostic tool. The values indicated in this conformity check are given as examples. **Application conditions:** Engine stopped, **ignition on**.

Sub-function: Starting

Order	Function	Parameter or Status checked or Action	Display and Notes	Fault finding
1	**Starter motor**	**ET430: Starter relay**	**INACTIVE**	In the event of a fault, carry out fault finding on the UCH (see **87B, Passenger compartment connection unit, Interpretation of faults**).
2	**Battery voltage**	**PR071: Computer feed voltage**	**11.8 V < X < 13.8 V**	Check the battery voltage and the charging circuit.

GETtheMANUALS.org

NOTES	Only check conformity after a **full check** with the diagnostic tool. The values indicated in this conformity check are given as examples. **Application conditions:** Engine stopped, **ignition on**.

Sub-function: Protection

Order	Function	Parameter or Status checked or Action		Display and Notes	Fault finding
1	**Engine immobiliser**	**ET003:**	engine immobiliser	**ACTIVE** **INACTIVE**	If ACTIVE, refer to section **87B Connection unit**.
		ET341:	immobiliser code programmed	**YES** **NO**	If NO, refer to section **87B Connection unit**.
		ET077:	impact detected	**YES** **NO**	If YES, switch off the ignition for 10 seconds, then switch it back on so the engine can be restarted. Then clear any faults.

GETtheMANUALS.org

Tool status	Diagnostic tool title
ET001	Computer + after ignition feed
ET003	Engine immobiliser
ET004	Air conditioning authorisation
ET018	Air conditioning request
ET038	Engine
ET042	Cruise control/speed limiter
ET050	Canister bleed control
ET051	Throttle stop programming
ET054	Idle speed regulation
ET063	Park/Neutral position
ET077	Impact detected
ET143	Low speed fan assembly relay control
ET144	High-speed fan assembly relay control
ET215	Redundant brake pedal
ET219	Fast idle speed
ET236	Heated windscreen
ET237	Brake pedal
ET278	Throttle position: no load
ET297	Power-assisted steering pressure switch
ET341	Immobiliser code programmed
ET348	Sensor fault finding complete
ET351	Injection → electronic stability program connection
ET395	Catalytic converter OBD fault finding: DONE

GETtheMANUALS.org

Tool status	Diagnostic tool title
ET413	Cruise control/speed limiter function
ET415	Cruise control/speed limiter deactivation
ET425	Heated rear screen
ET430	Starter relay
ET533	Upstream oxygen sensor no. 1 heating
ET534	Upstream oxygen sensor no. 2 heating
ET535	Downstream oxygen sensor no. 1 heating
ET536	Downstream oxygen sensor no. 2 heating
ET538	Heating element management
ET540	Canister bleed OBD fault finding
ET541	Oxygen sensor heating OBD fault finding
ET556	Driver deactivation of the cruise control/speed limiter
ET557	Deactivation of cruise control/speed limiter by cruise control/speed limiter function
ET683	Fault on the 2 cruise control/speed limiter brake contacts
ET684	Fault on one of the 2 cruise control/speed limiter brake contacts
ET685	Fault on cruise control or speed limiter button
ET686	Fault on cruise control/speed limiter selector switches on steering wheel
ET802	Air path programming

GETtheMANUALS.org

ET042	CRUISE CONTROL/SPEED LIMITER

NOTES	**Special note:** Only perform these tests if the statuses do not correspond with the system programming functions.

CRUISE CONTROL

Status **ET042** changes to "**CRUISE CONTROL**" when the **cruise control activation button** is pressed. This button is situated on the instrument panel, or on the centre console of the vehicle.
A **green** instrument panel warning light comes on when status **ET042** is at "**CRUISE CONTROL**".
If status **ET042** does not change to "**CRUISE CONTROL**", check the "**ON/OFF**" button of the cruise control, and the condition of its connector.
Repair if necessary.
Check **for continuity and make sure there is no interference resistance** on the following connection:

Track 30, injection computer connector A ⟶ **track A3** of the 6-track connector Cruise control start/stop button

Repair if necessary.

SPEED LIMITER

Status **ET042** changes to "**CRUISE CONTROL**" when the **cruise control activation button** is pressed. This button is situated on the instrument panel, or on the centre console of the vehicle.
A **yellow** instrument panel warning light comes on when status **ET042** is "**SPEED LIMITING**".
If status **ET042** does not change to "**CRUISE CONTROL**", check the "**ON/OFF**" button of the cruise control, and the condition of its connector.
Repair if necessary.
Check **for continuity and make sure there is no interference resistance** on the following connection:

Track 29, injection computer connector A ⟶ **track B1** of the 6-track connector Cruise control start/stop button

Repair if necessary.

AFTER REPAIR	Repeat the conformity check from the start.

GETtheMANUALS.org

ET143	LOW-SPEED FAN UNIT RELAY CONTROL

NOTES	There should be no fault detected on the coolant temperature sensor circuit when this fault finding procedure is being carried out.

Check:
– condition of the low-speed fan unit,
– that the low-speed fan resistance is correct,
– cleanness of the low-speed fan earth,
– low-speed fan feed,
  – feed line between the low-speed fan and the low-speed fan relay.

Repair if necessary.

Check **the connection and condition of the low-speed fan unit relay connector**.
Replace the connector if necessary.

Disconnect the low-speed fan relay. With the ignition on, check for the presence of **+ 12 V on track 1 of the relay**.
Repair if necessary.

Check the **continuity of the relay coil**.
Replace the low-speed fan relay if necessary.

Connect the bornier in place of the computer and check the **insulation, continuity and the absence of interference resistance** on the connection between:

Track 64, injection computer connector A ⟶ **Low-speed fan relay**

Repair if necessary.

AFTER REPAIR	Repeat the conformity check from the start.

GETtheMANUALS.org

ET144	HIGH-SPEED FAN UNIT RELAY CONTROL

NOTES	There should be no fault detected on the coolant temperature sensor circuit when this fault finding procedure is being carried out.

Check:
– condition of the high-speed fan unit,
– that the high-speed fan resistance is correct,
– cleanness of the high-speed fan earth,
– high-speed fan feed,
  – feed line between the high-speed fan and the high-speed fan relay.

Repair if necessary.

Check **the connection and condition of the high-speed fan unit relay connector**.
Replace the connector if necessary.

Disconnect the high-speed fan relay. With the ignition on, check for the presence of **+ 12 V on track 1 of the relay**.
Repair if necessary.

Check the **continuity of the relay coil**.
Replace the high-speed fan relay if necessary.

Connect the bornier in place of the computer and check the **insulation, continuity and the absence of interference resistance** on the connection between:

Track 64, injection computer connector A ⟶ **High-speed fan relay**

Repair if necessary.

AFTER REPAIR	Repeat the conformity check from the start.

GETtheMANUALS.org

ET413	CRUISE CONTROL/SPEED LIMITER FUNCTION

NOTES	**Special notes:** Apply the conformity check to see if the statuses are consistent with the operating programs of the system.

INCREASE

Status **ET413** changes to "**INCREASE**" when the "**+**" button for the cruise control is pressed.
This button is situated to the left of the steering wheel.
If status **ET413** does not change to "**INCREASE**", check the condition of the "±" cruise control button and its connector. Repair if necessary.
To be able to remove the driver's airbag and carry out the measures in complete safety (see 88C, Airbag and pretensioners).
Repair if necessary.

Measure **the resistance of the following connection, after pressing the "+" button**:

Track 55, injection computer connector A ⟶ **Track** A1 "±" button

If the resistance is not approximately **300 Ω**, check the continuity of the connection when the button is not pressed.
If there is continuity, replace the "±" control button.
If the connection is broken, repair it.

DECREASE

Status **ET413** changes to "**DECREASE**" when the cruise control "**-**" button is pressed.
This button is situated to the left of the steering wheel.
If status **ET413** does not change to "**DECREASE**", check the condition of the "**±**" cruise control button and its connector. Repair if necessary.
To be able to remove the driver's airbag and carry out the measures in complete safety (see 88C, Airbag and pretensioners).
Repair if necessary.

Measure **the resistance of the following connection after pressing the "-" button**:

Track 55, injection computer connector A ⟶ **Track** A2 "±" button

If the resistance is not approximately **100 Ω**, check the continuity of the connection when the button is not pressed.
If there is continuity, replace the "**±**" control button.
If the connection is broken, repair it.

AFTER REPAIR	Repeat the conformity check from the start.

GETtheMANUALS.org

ET413 CONTINUED	

SUSPEND

Status **ET413** changes to "SUSPEND" when the "**0**" cruise control button is pressed. This button is situated to the right of the steering wheel.

If status **ET413** does not change to "SUSPEND", check the condition of the "**R/0**" cruise control button and its connector. Repair if necessary.

Refer to the airbag Technical Note associated with the vehicle, in order to remove the driver's airbag, and carry work out safely.
Repair if necessary.

Measure the **resistance of the following connection, after pressing the "0" button**:

Track 55, injection computer connector A ⟶ **Track A2,** "**R/0**" button

If the resistance is not approximately **0 Ω**, replace the "**R/0**" control button.
If the connection is broken, repair it.

RESUME

Status **ET413** changes to "RESUME" when the "**R**" cruise control button is pressed. This button is situated to the right of the steering wheel.

If status **ET413** does not change to "RESUME", check the condition of the "**R/0**" cruise control button and its connector. Repair if necessary.

Refer to the airbag fault finding note associated with the vehicle, in order to remove the driver's airbag, and carry work out safely.
Repair if necessary.

Measure the **resistance of the following connection, after pressing the "R" button**:

Track 55, injection computer connector A ⟶ **Track A2,** "**R/0**" button

If the resistance is not approximately **900 Ω**, check the continuity of the connection when the button is not pressed.
If there is continuity, then replace the "**R/0**" control button.
If the connection is broken, repair it.

AFTER REPAIR	Repeat the conformity check from the start.

GETtheMANUALS.org

ET556	DRIVER DEACTIVATION OF THE CRUISE CONTROL/SPEED LIMITER

NOTES	**Special notes:** Apply the conformity check to see if the statuses are consistent with the operating programs of the system.

Note:
Cruise control can be activated when the vehicle speed exceeds **18 mph (30 km/h)**. Status **ET556** details 6 causes for cruise control deactivation.
NOTE
To reinitialise the deactivations stored by the injection computer, use command RZ007 "Fault memory".

STATUS 1	**Brake pedal depressed**
	The cruise control function is deactivated each time the brake pedal is depressed. Status **ET556** changes to "**STATUS 1**", when driving, with cruise control active and the brake pedal depressed. If status **ET556** changes to "**STATUS 1**" without depressing the brake pedal, refer to interpretation of fault **DF411 "Brake pedal sensor circuit"**.

STATUS 2	**Traction control request**
	If the vehicle being diagnosed is fitted with traction control, the cruise control function is deactivated each time traction control is selected. Status **ET556** changes to "**STATUS 2**", when driving, with cruise control active and traction control requested. If status **ET556** changes to "**STATUS 2**" without traction control request, refer to fault finding note relating to the vehicle's traction control system.

STATUS 3	**Suspend button pressed**
	Status **ET556** changes to "**STATUS 3**" when driving, with Cruise control/Speed limiter active, if the driver presses the "**0**" button on the Cruise control/Speed limiter. If status **ET556** changes to "**STATUS 3**" without pressing the "**0**" button on the Cruise control/Speed limiter, consult the interpretation of status **ET413 "Cruise control/speed limiter function"** and run fault finding on the "**R/0**" control button of the Cruise control/ Speed limiter.

AFTER REPAIR	Repeat the conformity check from the start.

GETtheMANUALS.org

ET556 CONTINUED	

STATUS 5	**Gear lever in neutral position**
	Status **ET556** changes to "**STATUS 5**", when driving, with cruise control active and – if gear lever is in neutral on an automatic transmission. This deactivates cruise control. If status **ET556** changes to "**STATUS 5**" or out of neutral on an automatic transmission, contact the Techline.

STATUS 6	**Inconsistency between the request and the vehicle speed**
	Status **ET556** changes to "**STATUS 6**" if the computer detects too great a difference between the speed requested by the driver and the vehicle speed. This may occur when driving, with cruise control active and where the difference between speeds is great. If status **ET556** changes to "**STATUS 6**" without a great difference in the speeds, contact the Techline.

AFTER REPAIR	Repeat the conformity check from the start.

GETtheMANUALS.org

ET557	CRUISE CONTROL/SPEED LIMITER DEACTIVATION BY FUNCTION

NOTES	**Special notes:** Apply the conformity check to see if the statuses are consistent with the operating programs of the system.

Note:
Cruise control remains deactivated as long as the vehicle speed does not exceed **18 mph (30 km/h).** Status **ET557** details 4 causes for cruise control deactivation.
NOTE
To reinitialise the deactivations stored by the injection computer, use command RZ007 "Fault memory".

STATUS 1	**Cruise control or speed limiter fault**
	If status **ET557** is "**STATUS 1**", refer to the interpretation of status **ET042** "**Cruise control/speed limiter**" and **ET413** "**Cruise control/speed limiter function**", to test the components of the cruise control system and find the faulty one. If status **ET557** changes to "**STATUS 1**", deal with the faults present or stored in the computer. If the fault is still present, contact the Techline.

STATUS 2	**Fault detected by the injection computer**
	Status **ET557** changes to "**STATUS 2**" if the injection computer detects a fault on the injection system: – **faults in the engine speed sensor or camshaft,** – **accelerator pedal faults,** – **engine speed lower than 1000 rpm,** – **engine speed greater than 4700 rpm.** Carry out a multiplex network test, then an injection system test, and carry out fault finding on any faults. If the fault is still present, contact the Techline.

AFTER REPAIR	Repeat the conformity check from the start.

GETtheMANUALS.org

ET557 CONTINUED	

STATUS 3	**Invalid vehicle speed**
	Status **ET557** changes to "**STATUS 3**" if the vehicle speed received by the computer is invalid. Carry out fault finding on the **ABS** computer. If faults are present (see **38C, Anti-lock braking system).** If the fault is still present, contact the Techline.

STATUS 4	**Automatic transmission in defect mode.**
	Status **ET557** changes to "**STATUS 4**" if there is a fault in the automatic transmission system. Carry out fault finding on the **automatic transmission** computer. If there are faults (**see 23A, Automatic transmission**). If the fault is still present, contact the Techline.

AFTER REPAIR	Repeat the conformity check from the start.

GETtheMANUALS.org

Tool parameter	Diagnostic tool title
PR058	Air temperature
PR064	Coolant temperature
PR071	Computer supply voltage
PR079	Atmospheric pressure sensor voltage
PR102	Canister bleed solenoid valve OCR
PR145	Engine speed
PR146	Inlet air flow
PR155	Vehicle speed
PR190	Engine idle speed set value
PR192	Engine torque map
PR429	Measured throttle position
PR448	Ignition advance
PR491	Measured pedal position
PR538	Measured throttle voltage, gang 2
PR539	Measured throttle voltage, gang 1
PR546	Row 1 richness regulation
PR547	Row 2 richness regulation
PR550	Row 1 richness regulation adaptive program
PR551	Row 2 richness regulation adaptive program
PR554	Engine load
PR568	Pedal position gang 1
PR569	Pedal position gang 2
PR580	Upstream oxygen sensor No.1

GETtheMANUALS.org

Tool parameter	Diagnostic tool title
PR581	Downstream oxygen sensor No.1
PR582	Upstream oxygen sensor No.1
PR583	Downstream oxygen sensor No.1
PR612	Position of camshaft d row 1
PR613	Position of camshaft g row 2
PR615	Camshaft offset row 1
PR616	Camshaft offset row 2
PR617	Camshaft offset set value row 1
PR618	Camshaft offset set value row 2
PR619	Duration of injection row 1
PR620	Duration of injection row 2
PR621	Power authorised by the air conditioning compressor

GETtheMANUALS.org

Tool command	Diagnostic tool title
AC015	Fuel pump relay
AC153	High-speed fan assembly
AC154	Low-speed fan assembly
AC176	Downstream oxygen sensor heating
AC193	Variable inlet solenoid valve
VP007	Decrease idling speed
VP011	Increase idling speed
VP020	Write VIN
VP070	Program air path
RZ007	Fault memory
RZ019	Reinitialise programming
RZ032	Program air path

GETtheMANUALS.org

AC015	FUEL PUMP RELAY

NOTES	Malfunctioning of the fuel pump relay could lead to the appearance of faults relating to the injectors and the fuel vapour absorber bleed solenoid valve.

Check the **condition and connection** of the fuel pump relay connector. Repair if necessary.
Check the continuity of the fuel pump relay **control coil**. Replace the relay if necessary.
Check for **12 V** on **track 3** of the fuel pump relay connector. Repair the wiring up to the fuse if necessary.
With the ignition switched on, check **for 12 V** on **track 2** of the fuel pump relay connector. Repair the wiring up to the fuse if necessary.
Check **the continuity and insulation** of the following connections: **Injection computer, connector B, track 96** → **Fuel pump relay track 1** **Petrol pump** → **Fuel pump relay track 5** Repair if necessary.
If the fault persists, change the petrol pump.

AFTER REPAIR	Carry out another fault finding check on the system.

GETtheMANUALS.org

NOTES	Only refer to these customer complaints after performing a complete check with the diagnostic tool.

NO DIALOGUE WITH THE COMPUTER	→ **ALP 1**
STARTING FAULTS	→ **ALP 2**
IDLING SPEED FAULTS	→ **ALP 3**
FAULTS WHILE DRIVING	→ **ALP 4**

GETtheMANUALS.org

ALP 1	No dialogue with the computer

NOTES	Check the battery voltage.

Ensure that the diagnostic tool is not the cause of the fault by using it to establish dialogue with a computer on another vehicle.
Check the connection between the diagnostic tool and the diagnostic socket (condition of the lead).
Check the injection, engine and passenger compartment fuses.
Repair if necessary.

Check for **+ 12 V** on **track 16** and for **an earth** on tracks **4** and **5** of the diagnostic socket.
Repair if necessary.

Use the bornier to check the **insulation, continuity and the absence of interference resistance** on the following **connections**:

Track 2 injection computer connector A	→	**Earth**
Track 4, injection computer connector A	→	**Earth**
Injection computer, connector B, track 115	→	**Earth**
Injection computer, connector B, track 116	→	**Earth**
Injection computer, connector B, track 118	→	**Earth**
Injection computer, connector B, track 121	→	**Earth**
Track 14, injection computer connector A	→	**Track 7 diagnostic socket**
Track 9, injection computer connector A	→	**+ After ignition**
Injection computer, connector B, track 113	→	**Fuse**
Track 44, injection computer connector A	→	**Main relay**
Injection computer, connector B, track 117	→	**Main relay**
Injection computer, connector B, track 119	→	**Main relay**
Injection computer, connector B, track 120	→	**Main relay**

Check the resistance and operation of the main relay control coil.
Replace the relay if necessary.

AFTER REPAIR	Carry out a complete check with the diagnostic tool.

GETtheMANUALS.org

ALP 2	Starting faults

NOTES	Only check the customer complaint after performing a **complete check with the diagnostic tool**.

Check the reliability of the starter motor.
Check that there is fuel present (the fuel gauge may be faulty). Check that the fuel is of the correct type.
Check that no hoses are pinched (especially after a removal operation). Check the condition of the fuel filter. Check the condition of the tank. Check that the tank vent is not blocked.
Check the petrol pump electrical supply. Check that the impact sensor is operating correctly.
Check the idle speed regulation valve. Tap gently to release the valve.
Disconnect the pipe connecting the canister bleed solenoid valve to the inlet manifold. Plug the pipe to prevent an air leak. If there is no longer any disturbance, the canister bleed is at fault.
Check condition of spark plugs and ignition coils. Check that these elements are correct for the vehicle.
Check that the exhaust system is not blocked and that the catalytic converters are not clogged.
Check the engine compressions.
Check the condition of the flywheel.
Check the timing gear setting.

AFTER REPAIR	Carry out a complete check with the diagnostic tool.

GETtheMANUALS.org

ALP 3	Idle speed faults

NOTES	Only check the customer complaint after performing a **complete check with the diagnostic tool**.

Check that there is fuel present (the fuel gauge may be faulty). Check that the fuel is of the correct type.
Check that no hoses are pinched (especially after a removal operation). Check the condition of the fuel filter. Check the condition of the tank. Check that the tank fresh air vent is not blocked.
Check that no hoses are pinched (especially after a removal operation). Check the condition of the fuel filter. Check the condition of the tank. Check that the tank vent is not blocked.
Check the connection and condition of the idle speed regulation stepper motor connector. Replace the connector if necessary.
Check the idle speed regulation valve. Tap gently to release the valve.
Check that the camshaft dephaser solenoid valves are not jammed in the open position.
Disconnect the pipe connecting the canister bleed solenoid valve to the inlet manifold. Plug the pipe to prevent an air leak. If there is no longer any disturbance, the canister bleed is at fault.
Check condition of spark plugs and ignition coils. Check that these elements are correct for the vehicle.

AFTER REPAIR	Carry out a complete check with the diagnostic tool.

GETtheMANUALS.org

ALP 4	Faults when driving

NOTES	Only check the customer complaint after performing a **complete check with the diagnostic tool**.

Check that there is fuel present (the fuel gauge may be faulty). Check that the fuel is of the correct type.
Check that no hoses are pinched (especially after a removal operation). Check the condition of the fuel filter. Check the condition of the tank. Check that the tank fresh air vent is not blocked.
Check that no hoses are pinched (especially after a removal operation). Check the condition of the fuel filter. Check the condition of the tank. Check that the tank vent is not blocked.
Check the connection and condition of the idle speed regulation stepper motor connector. Replace the connector if necessary.
Check the idle speed regulation valve. Tap gently to release the valve.
Check that the camshaft dephaser solenoid valves are not jammed in the open position.
Disconnect the pipe connecting the canister bleed solenoid valve to the inlet manifold. Plug the pipe to prevent an air leak. If there is no longer any disturbance, the canister bleed is at fault.
Check condition of spark plugs and ignition coils. Check that these elements are correct for the vehicle.

AFTER REPAIR	Carry out a complete check with the diagnostic tool.

GETtheMANUALS.org

VEL SATIS

2 Transmission

20A CLUTCH

Clutch - Operation	20A - 2
Hydraulic clutch - Operating diagram	20A - 3
Hydraulic clutch - Tooling and equipment	20A - 4
Hydraulic clutch - Customer complaints	20A - 5
Hydraulic clutch - Fault finding chart	20A - 6

V1 **Edition Anglaise**

"The repair procedures given by the manufacturer in this document are based on the technical specifications current when it was prepared.

The procedures may be modified as a result of changes introduced by the manufacturer in the production of the various component units and accessories from which his vehicles are constructed."

All rights reserved by Renault s.a.s.

Copying or translating, in part or in full, of this document or use of the service part reference numbering system is forbidden without the prior written authority of Renault s.a.s.

© Renault s.a.s.

GETtheMANUALS.org

The clutch is a system which enables mechanical action to be either linked or not to an end component.
It is made up of an assembly of parts located between the engine and the transmission components.
It ensures the following functions:

- **When engaged: transmits the power provided.**
- **When disengaged: this transmission is interrupted.**
- **Between the two positions: the transmission of power is gradually restarted.**

There are different types of clutch:

- **Depending on number of discs:**
  - **dry single disc clutch,**
  - **dry double disc clutch with single control,**
  - **double disc clutch with separate control (double),**
  - **wet or dry multidisc clutch.**

- **Depending on type of control:**
  - **manual control,**
  - **hydraulic control,**
  - **electric control with electronic servo.**

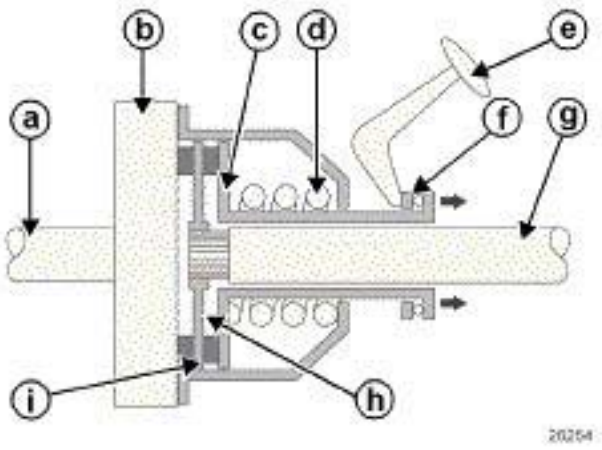

a : crankshaft
b : flywheel
c : pressure plate
d : spring
e : clutch pedal
f : clutch thrust bearing
g : gearbox input shaft
h : clutch plate
i : clutch plate pad

The system is made up of the flywheel (b) (attached to the engine) (the bolts in the centre are screwed into the crankshaft (a)).
The clutch plate is attached to the gearbox.
The outermost part is called the friction or pad. The pressure plate ensures that the clutch plate is held against the flywheel when the clutch is engaged, as this is what ensures that they turn at exactly the same speed, one driving the other.
The pressure plate springs are pushed in by the clutch thrust bearing.
When the clutch control (hydraulic, or cable operated) is activated, the clutch plates move apart and less and less movement is transmitted, leaving the gearbox free of the engine. This, for example, allows the vehicle remain stationary without stalling the engine, or a gear to be changed.
The opposite action involves gradually releasing the clutch control, so that the engine and gearbox are reconnected. This manoeuvre is called "slipping the clutch".

GETtheMANUALS.org

Cross section of the hydraulic system:

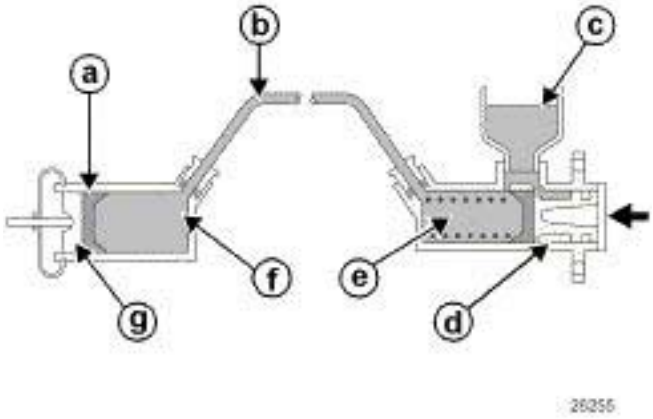

a : seal
b : pipe
c : reservoir
d : piston
e : master cylinder
f : slave cylinder
g : piston

Overall diagram of the hydraulic system:

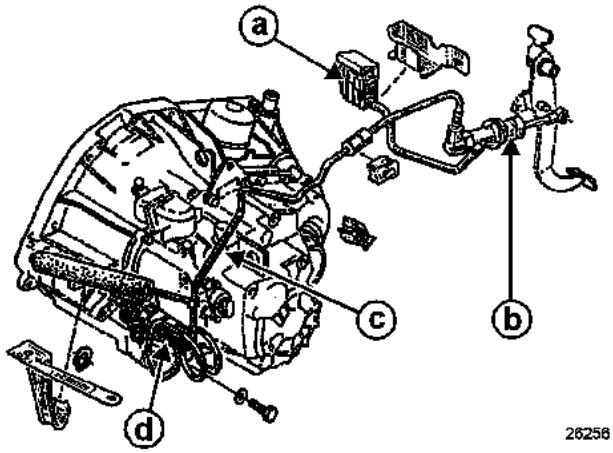

a : hydraulic fluid reservoir
b : master cylinder
c : duct + filter
d : slave cylinder

GETtheMANUALS.org

Standard tooling is used

GETtheMANUALS.org

Customer complaint: the clutch pedal remains depressed after use.

Use the fault finding chart (see next page) in the following cases:

- **The pedal remains depressed, without the vehicle moving, with the engine running or stationary:**
  - **either after making several successive manoeuvres,**
  - **or after leaving the foot down on the pedal using moderate force for a reasonably prolonged period.**

The function temporarily returns to normal after releasing the pedal manually.

- **The pedal remains depressed only after reasonably prolonged use of the vehicle, particularly in heavy traffic.**

The function temporarily returns to normal after releasing the pedal manually.

- **The pedal remains depressed immediately after each manoeuvre. There is little or no force felt from the pedal and returning the pedal manually does not stop the fault from recurring.**

- **After a prolonged stop in the disengaged position, first gear engaged (stop at traffic lights, for example), the vehicle has a tendency to creep forward after a certain amount of time. If the pedal is released, it does not return.**

GETtheMANUALS.org

NOTES	– Check that the customer has not topped up the brake fluid level. – Check the condition of the brake pads before topping up the brake fluid.

Check the area surrounding the pedals, on the passenger compartment side.

Is the floor carpet or another foreign body blocking the travel of the clutch pedal?

YES → Disengage the pedal and check that the customer complaint is no longer present.

NO → Check the return spring and the pushrod for the pedals.

Are there any anomalies?

YES → Repair the anomaly and check that the customer complaint is no longer present.

NO → Check the level of hydraulic fluid

Is the level below the take-off point supplying the master cylinder?

NO → (A)

YES → Check the sealing of the hydraulic circuit pipes

Are there any leaks around the unions or pipes?

NO → (A)

YES → Carry out the necessary repairs

NO → (A)

GETtheMANUALS.org

NOTES	– Check that the customer has not topped up the brake fluid level. – Check the condition of the brake pads before topping up the brake fluid.

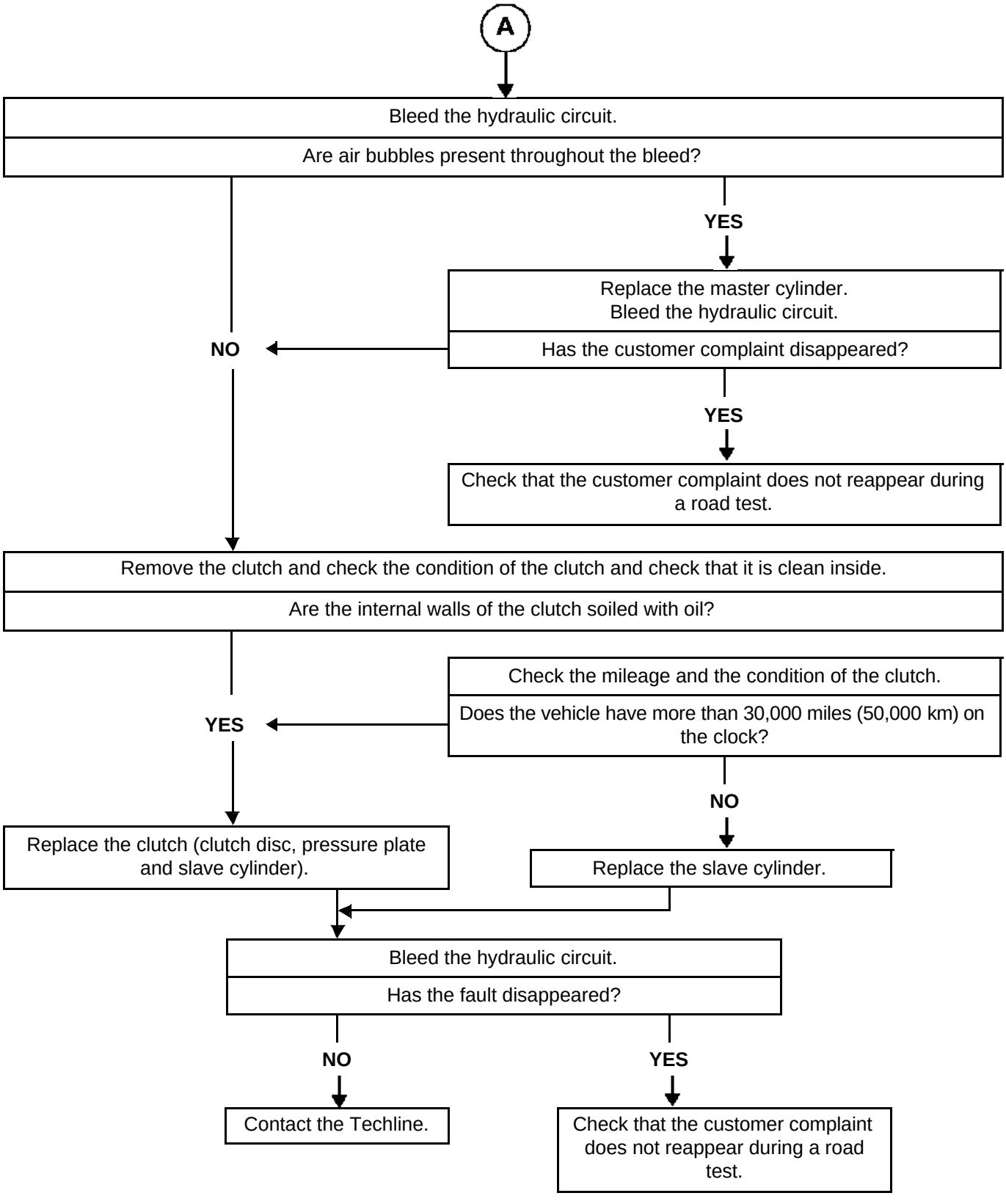

GETtheMANUALS.org

VEL SATIS

2 Transmission

23A AUTOMATIC GEARBOX

SU1 2001
Vdiag No.: 08

ABBREVIATIONS	23A - 1
Fault finding - Introduction	23A - 2
Fault finding - Interpretation of faults	23A - 3
Fault finding - Conformity check	23A - 38
Fault finding - Interpretation of statuses	23A - 41
Fault finding - Interpretation of parameters	23A - 44
Fault finding - Help	23A - 45
Fault finding - Customer complaints	23A - 46
Fault finding - ALP	23A - 48

DECEMBER 2005 **EDITION ANGLAISE**

"The repair procedures given by the manufacturer in this document are based on the technical specifications current when it was prepared.

The procedures may be modified as a result of changes introduced by the manufacturer in the production of the various component units and accessories from which his vehicles are constructed."

All rights reserved by Renault s.a.s.

Copying or translating, in part or in full, of this document or use of the service part reference numbering system is forbidden without the prior written authority of Renault s.a.s.

© Renault s.a.s. 2005

AUTOMATIC GEARBOX
ABBREVIATIONS

GETtheMANUALS.org

ABBREVIATIONS	MEANING OF ABBREVIATION
ABS	Anti-lock braking system
ALP	Fault Finding Chart
APC	After ignition
AVC	Before ignition feed
BVA	Automatic gearbox
BVM	Manual gearbox
BVR	Sequential gearbox
CAN	Controller Area Network
AC	Air conditioning
CD	Compact disc
PAS	Power assisted steering (hydraulic)
DAE	Electric power assisted steering
DVD	Digital versatile disc
DTC	Fault finding code
EGR	Exhaust gas recirculation
ESP	Electronic Stability Program
GMV	Fan assembly
CNG	Compressed natural gas
LPG	Liquefied petroleum gas
HLE	High yield strength
MAG	Metal active gas (for welding steel)
MIG	Metal inert gas (for welding aluminium)
MR	Workshop repair manual
TN	Technical Note
OBD	On board diagnostics
SER	Resistance spot welding
SSPP	Tyre pressure monitoring system
THLE	Very high-tensile strength
TM	Labour time
UCH	UCH
UPC	Protection and switching unit
UCT	Roof control unit
UHLE	Ultra high yield strength
VIN	Vehicle identification number

AUTOMATIC GEARBOX
Fault finding - Introduction

GETtheMANUALS.org

This document presents the fault finding strategy applicable to all SU1 2001 AUTOMATIC GEARBOX computers - with VDIAG 08 fitted to Vel Satis.

In order to implement fault finding on this system, it is essential to have the following items available:
- **the wiring diagram of the function for the vehicle concerned,**
- **the tools listed in the Special tooling required section.**

GENERAL APPROACH TO FAULT FINDING:

- **Use one of the diagnostic tools for identifying the system fitted on the vehicle (reading the computer type, program number, Vdiag number, etc.).**

- **Locate the Fault finding documents corresponding to the system identified.**

- **Take into consideration information contained in the introductory sections.**

- **Read the faults stored in the computer memory and use the Interpretation of faults section of the documents.**
  REMINDER: each fault is interpreted for a given type of storage (fault present, fault stored, fault present or stored). The checks defined for dealing with each fault are therefore only to be performed on the vehicle if the fault declared by the diagnostic tool is interpreted in the document for its type of storage. The way in which the fault is stored should be considered when using the diagnostic tool after the ignition has been switched off and on again.
  If a fault is interpreted when it is recorded as stored, the application conditions for the fault finding procedure appear in the Notes box. If the conditions are not met, use the fault finding procedure to check the circuit of the faulty component, since the fault is no longer present on the vehicle. Perform the same procedure when a fault is declared as stored by the diagnostic tool but is only interpreted in the documentation as a present fault.

- **Carry out the conformity check (appearance of possible faults not yet identified by the system's self fault finding procedure) and implement the relevant fault finding strategies according to the results.**

- **Confirm the repair (disappearance of the fault reported by the customer).**

- **Use the fault finding strategies for the customer complaint if the fault is still present.**

<u>Tooling required for operations on the SU1 2001 automatic gearbox:</u>

- CLIP
- Multimeter.

GETtheMANUALS.org

DF002 PRESENT	COMPUTER 1.DEF : Internal electronic fault

NOTES	**Special notes:** make sure that the fault does not appear after the computer has been reprogrammed, if it does, carry out the procedure again very carefully.

Replace the automatic gearbox computer if the fault appears during normal use or is still present after several reprogramming attempts.

AFTER REPAIR	Clear the computer memories and switch off the ignition. Now road test the vehicle to initialise the auto-adaptatives. Check again using the diagnostic tool.

GETtheMANUALS.org

DF019 STORED	GEARBOX OUTPUT SPEED SENSOR CIRCUIT 1.DEF : No signal

NOTES	**Conditions for applying the fault finding procedure to stored faults:** The fault is declared present after: – the computer fault memory has been cleared, – the ignition has been switched off and on again, – the engine has been started and left running for **3 minutes**. **Special notes:** road test the vehicle in Drive or Reverse if the speed does not remain zero and faults **DF019** and **DF057** are present at the same time; refer to the information on ABS ECU (speed inconsistent with ABS).

1.DEF

Check the connections on the computer and the **2-track** speed sensor connector.
Check the continuity, insulation and absence of interference resistance between:

Computer connector **track 22** → **Track 2 of the speed sensor connector**
Computer connector **track 37** → **Track 1 of the speed sensor connector**

If the fault is still present after these checks, replace the vehicle speed sensor.

AFTER REPAIR	Clear the computer memories, switch off the ignition, then carry out a road test. Check again using the diagnostic tool.

GETtheMANUALS.org

DF023 STORED	GEARBOX OIL TEMPERATURE SENSOR CIRCUIT 1.DEF : Consistency CC.0 : Short circuit to earth CO.1 : Open circuit or short circuit to + 12 V

NOTES	**Conditions for applying the fault finding procedure to stored faults:** The fault is declared present after: – the computer fault memory has been cleared, – the ignition has been switched off and on again, – the engine has been started and vehicle driven for **15 minutes**.

CC.O	***NOTES***	None.

Check the connections on the computer and the connector.
Check **the continuity and insulation** against earth and **+ 12 V** of the connections between:

Computer connector track 10 ⟶ **Track 1 of the 8-track gearbox connector**
Computer connector track 24 ⟶ **Track 5 of the 8-track gearbox connector**

Replace the wiring harness if necessary.

AFTER REPAIR	Clear the computer memories, switch off the ignition, then carry out a road test. Check again using the diagnostic tool.

GETtheMANUALS.org

DF023 **CONTINUED 1**	

CO.1	***NOTES***	The **80°C** value given by **PR004** is a safety value and not representative of the sensor signal when the fault is present.

Check the connections on the computer and the connector.
Check **the continuity and insulation** against earth and **+ 12 V** of the connections between:

Computer connector track 10 ⟶ **Track 1 of the 8-track gearbox connector**
Computer connector track 24 ⟶ **Track 5 of the 8-track gearbox connector**

Replace the wiring harness if necessary.

Switch off the ignition, disconnect the **8-track** connector on the automatic gearbox and measure the oil temperature sensor resistance between **tracks 1 and 5** on the sensor side.

If the resistance measured is not approximately:

- **111 ± 6 Ω at 145°C**
- **247 ± 16 Ω at 110°C**
- **6.445 ± 0.645 kΩ at 10°C**
- **44 ± 6 kΩ at - 30°C**

Replace the gearbox oil temperature sensor.

If the sensor resistance is correct, repair or replace the wiring concerned.

AFTER REPAIR	Clear the computer memories, switch off the ignition, then carry out a road test. Check again using the diagnostic tool.

GETtheMANUALS.org

DF023 **CONTINUED 2**	

1.DEF	***NOTES***	The **80°C** value given by **PR004** is a default value. Do not take this into account when estimating the oil temperature.

Switch off the ignition, disconnect the **8-track** connector on the automatic gearbox and measure the oil temperature sensor resistance between **tracks 1 and 5** on the sensor side.

If the resistance measured is not approximately:

- **111 ± 6 Ω at 145°C**
- **247 ± 16 Ω at 110°C**
- **6.445 ± 0.645 kΩ at 10°C**
- **44 ± 6 kΩ at - 30°C**

Replace the gearbox oil temperature sensor.

AFTER REPAIR	Clear the computer memories, switch off the ignition, then carry out a road test. Check again using the diagnostic tool.

GETtheMANUALS.org

DF057 STORED	GEARBOX INPUT SPEED SENSOR CIRCUIT 1.DEF : No signal

NOTES	**Conditions for applying the fault finding procedure to stored faults:** The fault is declared present after: – the computer fault memory has been cleared, – the ignition has been switched off and on again, – the engine has been started and left running for **1 minute** in Neutral.
	Special notes: road test the vehicle in Drive or Reverse if the speed does not remain at zero and faults **DF019** and **DF057** are present at the same time; refer to the information on ABS ECU (speed inconsistency with ABS).

1.DEF

Check the connections on the computer and the **2-track** speed sensor connector.
Check the continuity, insulation and absence of interference resistance between:

Computer connector track 9 → **Track 2 of the speed sensor connector**

Computer connector track 23 → **Track 1 of the speed sensor connector**

If the fault is still present after these checks, replace the vehicle speed sensor.

AFTER REPAIR	Clear the computer memories, switch off the ignition, then carry out a road test. Check again using the diagnostic tool.

GETtheMANUALS.org

DF084 **STORED**	MULTIPLEX NETWORK 1.DEF : Carry out the multiplex network fault finding procedure

NOTES	**Conditions for applying the fault finding procedure to stored faults:** The fault is declared present after the engine is started.

Carry out the fault finding procedure for the multiplex network.

If the fault is still present, replace the computer

AFTER REPAIR	Clear the computer memories, switch off the ignition, then carry out a road test. Check again using the diagnostic tool.

GETtheMANUALS.org

DF085 STORED	SEQUENCE SOLENOID VALVE CIRCUIT EVS1 CC.0 : Short circuit to earth CO.1 : Open circuit or short circuit to + 12 V

NOTES	**Conditions for applying the fault finding procedure to stored faults:** The fault is declared present after: – the computer fault memory has been cleared, – the ignition has been switched off and on again, – the engine has been started and the vehicle driven for **3 minutes** in Drive (all the gears must be used).

CO.1	***NOTES***	None

Switch off the ignition, disconnect the **8-track** connector under the automatic gearbox and **measure the resistance** of the winding of sequence solenoid valve no. 1 between **earth** and **track 3** on the solenoid valve side.

If the resistance measured is not approximately **14 ± 2 Ω at 20°C**, remove the gearbox sump and take the same measurement on the solenoid valve itself. If the resistance is incorrect, replace the solenoid valve. If the resistance is correct, repair or replace the wiring in question.

Check the **continuity** of the connection between **track 2** of the computer connector and **track 3** of the **8-track** connector on the wiring harness side.

Check the **insulation** against **12 volts** of the connection between **tracks 29 and 30** of the computer connector and **track 3** of the **8-track** connector on the wiring harness side.

Repair or replace the automatic gearbox wiring concerned if a fault occurs.

Check the **continuity between earth** and **track 1** of the computer connector.

Check the connections on the automatic transmission computer and the **8-track** connector.
Carry out the required operations.

If the fault is still present after these tests, replace solenoid valve S1.

AFTER REPAIR	Clear the computer memory, switch off the ignition, then carry out a road test. Finish the operation by checking with the diagnostic tool. Use the actuator sequential command in the **SCENARIO** menu.

GETtheMANUALS.org

DF085 **CONTINUED**	

CC.0	***NOTES***	**Special notes:** None.

Switch off the ignition, disconnect the **8-track** connector under the automatic gearbox and **measure the resistance** of the winding of sequence solenoid valve no. 1 between **earth** and **track 3** on the solenoid valve side.

If the resistance measured is not approximately **14 ± 2 Ω at 20°C**, remove the gearbox sump and take the same measurement on the solenoid valve itself. If the resistance is incorrect, replace the solenoid valve. If the resistance is correct, repair or replace the wiring in question.

Check the **insulation** against earth of the connection between **track 2** of the computer connector and **track 3** of the **8-track** connector on the wiring harness side. Repair or replace the automatic gearbox wiring concerned if a fault occurs.

Check the connections on the automatic transmission computer and the **8-track** connector.
Carry out the required operations.

If the fault is still present after these tests, replace solenoid valve S1.

AFTER REPAIR	Clear the computer memory, switch off the ignition, then carry out a road test. Finish the operation by checking with the diagnostic tool. Use the actuator sequential command in the **SCENARIO** menu.

GETtheMANUALS.org

DF086 STORED	SEQUENCE SOLENOID VALVE CIRCUIT EVS2 CC.0 : Short circuit to earth CO.1 : Open circuit or short circuit to + 12 V

NOTES	**Conditions for applying the fault finding procedure to stored faults:** The fault is declared present after: – the computer fault memory has been cleared, – the ignition has been switched off and on again, – the engine has been started and the vehicle driven for **3 minutes** in Drive (all the gears must be used).

CO.1	***NOTES***	None

Switch off the ignition, disconnect the **6-track** connector under the automatic gearbox and **measure the resistance** of the winding of sequence solenoid valve no. 2 between **earth** and **track 3** on the solenoid valve side.

If the resistance measured is not approximately **13 ± 2 Ω at 20°C**, remove the gearbox sump and take the same measurement on the solenoid valve itself. If the resistance is incorrect, replace the solenoid valve.

If the resistance is correct, repair or replace the wiring in question.

Check the **continuity** of the connection between **track 16** of the computer connector and **track 3** of the **6-track** connector on the wiring harness side.

Check the **insulation** against **12 volts** of the connection between **tracks 29 and 30** of the computer connector and **track 3** of the **6-track** connector on the wiring harness side.

Repair or replace the automatic gearbox wiring concerned if a fault occurs.

Check **the continuity** between **earth** and **track 1** of the computer connector.

Check the connections on the automatic transmission computer and the **6-track** connector.
Carry out the required operations.

If the fault is still present after these checks, replace solenoid valve S2.

AFTER REPAIR	Clear the computer memory, switch off the ignition, then carry out a road test. Finish the operation by checking with the diagnostic tool. Use the actuator sequential command in the **SCENARIO** menu.

GETtheMANUALS.org

DF086 **CONTINUED**	

CC.0	***NOTES***	**Special notes:** None.

Switch off the ignition, disconnect the **6-track** connector under the automatic gearbox and **measure the resistance** of the winding of sequence solenoid valve no. 2 between **earth** and **track 3** on the solenoid valve side.

If the resistance measured is not approximately **13 ± 2 Ω at 20°C**, remove the gearbox sump and take the same measurement on the solenoid valve itself. If the resistance is incorrect, replace the solenoid valve. If the resistance is correct, repair or replace the wiring in question.

Check the **insulation** against earth of the connection between **track 16** of the computer connector and **track 3** of the **6-track** connector on the wiring harness side. Repair or replace the automatic gearbox wiring concerned if a fault occurs.

Check the connections on the automatic transmission computer and the **6-track** connector.
Carry out the required operations.

If the fault is still present after these checks, replace solenoid valve S2.

AFTER REPAIR	Clear the computer memory, switch off the ignition, then carry out a road test. Finish the operation by checking with the diagnostic tool. Use the actuator sequential command in the **SCENARIO** menu.

GETtheMANUALS.org

DF087 STORED	SEQUENCE SOLENOID VALVE CIRCUIT EVS3 CC.0 : Short circuit to earth CO.1 : Open circuit or short circuit to + 12 V

NOTES	**Conditions for applying the fault finding procedure to stored faults:** The fault is declared present after: – the computer fault memory has been cleared, – the ignition has been switched off and on again, – the engine has been started and the vehicle driven for **3 minutes** in Drive (all the gears must be used).

CO.1	***NOTES***	None

Switch off the ignition, disconnect the **6-track** connector under the automatic gearbox and **measure the resistance** of the winding of sequence solenoid valve no. 3 between **earth** and **track 6** on the solenoid valve side.

If the resistance measured is not approximately **13 ± 2 Ω at 20°C**, remove the gearbox sump and take the same measurement on the solenoid valve itself. If the resistance is incorrect, replace the solenoid valve.

If the resistance is correct, repair or replace the wiring in question.

Check the **continuity** of the connection between **track 31** of the computer connector and **track 6** of the **6-track** connector on the wiring harness side.

Check the **insulation** against **12 volts** of the connection between **tracks 29 and 30** of the computer connector and **track 6** of the **6-track** connector on the wiring harness side.

Repair or replace the automatic gearbox wiring concerned if a fault occurs.

Check **the continuity** between **earth** and **track 1** of the computer connector.

Check the connections on the automatic transmission computer and the **6-track** connector.
Carry out the required operations.

If the fault is still present after these checks, replace solenoid valve S3.

AFTER REPAIR	Clear the computer memory, switch off the ignition, then carry out a road test. Finish the operation by checking with the diagnostic tool. Use the actuator sequential command in the **SCENARIO** menu.

GETtheMANUALS.org

DF087 **CONTINUED**	

CC.0	***NOTES***	**Special notes:** None.

Switch off the ignition, disconnect the **6-track** connector under the automatic gearbox and **measure the resistance** of the winding of sequence solenoid valve no. 3 between **earth** and **track 6** on the solenoid valve side.

If the resistance measured is not approximately **13 ± 2 Ω at 20°C**, remove the gearbox sump and take the same measurement on the solenoid valve itself. If the resistance is incorrect, replace the solenoid valve. If the resistance is correct, repair or replace the wiring in question.

Check the **insulation** against earth of the connection between **track 31** of the computer connector and **track 6** of the **6-track** connector on the wiring harness side. Repair or replace the automatic gearbox wiring concerned if a fault occurs.

Check the connections on the automatic transmission computer and the **6-track** connector.
Carry out the required operations.

If the fault is still present after these checks, replace solenoid valve S3.

AFTER REPAIR	Clear the computer memory, switch off the ignition, then carry out a road test. Finish the operation by checking with the diagnostic tool. Use the actuator sequential command in the **SCENARIO** menu.

GETtheMANUALS.org

DF088 STORED	SEQUENCE SOLENOID VALVE CIRCUIT EVS5 CC.0 : Short circuit to earth CO.1 : Open circuit or short circuit to + 12 V

NOTES	**Conditions for applying the fault finding procedure to stored faults:** The fault is declared present after: – the computer fault memory has been cleared, – the ignition has been switched off and on again, – the engine has been started and the vehicle driven for **3 minutes** in Drive (all the gears must be used).

CO.1	***NOTES***	None

Switch off the ignition, disconnect the **8-track** connector under the automatic gearbox and **measure the resistance** of the winding of sequence solenoid valve no. 5 between **earth** and **track 8** on the solenoid valve side.

If the resistance measured is not approximately **13 ± 2 Ω at 20°C**, remove the gearbox sump and take the same measurement on the solenoid valve itself. If the resistance is incorrect, replace the solenoid valve.

If the resistance is correct, repair or replace the wiring in question.

Check the **continuity** of the connection between **track 17** of the computer connector and **track 8** of the **8-track** connector on the wiring harness side.

Check the **insulation** against **12 volts** of the connection between **tracks 29 and 30** of the computer connector and **track 8** of the **8-track** connector on the wiring harness side.

Repair or replace the automatic gearbox wiring concerned if a fault occurs.

Check **the continuity** between **earth** and **track 1** of the computer connector.

Check the connections on the automatic transmission computer and the **8-track** connector.
Carry out the required operations.

If the fault is still present after these checks, replace solenoid valve S5.

AFTER REPAIR	Clear the computer memory, switch off the ignition, then carry out a road test. Finish the operation by checking with the diagnostic tool. Use the actuator sequential command in the **SCENARIO** menu.

GETtheMANUALS.org

DF088 **CONTINUED**	

CC.0	***NOTES***	**Special notes:** None.

Switch off the ignition, disconnect the **8-track** connector under the automatic gearbox and **measure the resistance** of the winding of sequence solenoid valve no. 5 between **earth** and **track 8** on the solenoid valve side.

If the resistance measured is not approximately **13 ± 2 Ω at 20°C**, remove the gearbox sump and take the same measurement on the solenoid valve itself. If the resistance is incorrect, replace the solenoid valve. If the resistance is correct, repair or replace the wiring in question.

Check the insulation against earth of the connection between **track 17** of the computer connector and **track 8** of the **8-track** connector on the wiring harness side. Repair or replace the automatic gearbox wiring concerned if a fault occurs.

Check the connections on the automatic transmission computer and the **8-track** connector.
Carry out the required operations.

If the fault is still present after these checks, replace solenoid valve S5.

AFTER REPAIR	Clear the computer memory, switch off the ignition, then carry out a road test. Finish the operation by checking with the diagnostic tool. Use the actuator sequential command in the **SCENARIO** menu.

GETtheMANUALS.org

DF089 PRESENT	SEQUENCE SOLENOID VALVE CIRCUIT EVS4 CC.0 : Short circuit to earth CO.1 : Open circuit or short circuit to + 12 V

NOTES	**Conditions for applying the fault finding procedure to stored faults:** The fault is declared present after: – the computer fault memory has been cleared, – the ignition has been switched off and on again, – the engine has been started and the vehicle driven for **3 minutes** in Drive (all the gears must be used).

CO.1	***NOTES***	None

Switch off the ignition, disconnect the **8-track** connector under the automatic gearbox and **measure the resistance** of the winding of sequence solenoid valve no. 4 between **earth** and **track 4** on the solenoid valve side.

If the resistance measured is not approximately **13 ± 2 Ω at 20°C**, remove the gearbox sump and take the same measurement on the solenoid valve itself. If the resistance is incorrect, replace the solenoid valve.

If the resistance is correct, repair or replace the wiring in question.

Check the **continuity** of the connection between **track 3** of the computer connector and **track 4** of the **8-track** connector on the wiring harness side.

Check the **insulation** against **12 volts** of the connection between **tracks 29 and 30** of the computer connector and **track 4** of the **8-track** connector on the wiring harness side.

Repair or replace the automatic gearbox wiring concerned if a fault occurs.

Check **the continuity** between **earth** and **track 1** of the computer connector.

Check the connections on the automatic transmission computer and the **8-track** connector.
Carry out the required operations.

If the fault is still present after these checks, replace solenoid valve S4.

AFTER REPAIR	Clear the computer memory, switch off the ignition, then carry out a road test. Finish the operation by checking with the diagnostic tool. Use the actuator sequential command in the **SCENARIO** menu.

GETtheMANUALS.org

DF089 **CONTINUED**	

CC.0	***NOTES***	**Special notes:** None.

Switch off the ignition, disconnect the **8-track** connector under the automatic gearbox and **measure the resistance** of the winding of sequence solenoid valve no. 4 between **earth** and **track 4** on the solenoid valve side.

If the resistance measured is not approximately **13 ± 2 Ω at 20°C**, remove the gearbox sump and take the same measurement on the solenoid valve itself. If the resistance is incorrect, replace the solenoid valve. If the resistance is correct, repair or replace the wiring in question.

Check the **insulation against earth of the connection** between **track 3** of the computer connector and **track 4** of the **8-track** connector on the wiring harness side. Repair or replace the automatic gearbox wiring concerned if a fault occurs.

Check the connections on the automatic transmission computer and the **8-track** connector.
Carry out the required operations.

If the fault is still present after these checks, replace solenoid valve S4.

AFTER REPAIR	Clear the computer memory, switch off the ignition, then carry out a road test. Finish the operation by checking with the diagnostic tool. Use the actuator sequential command in the **SCENARIO** menu.

GETtheMANUALS.org

DF090 STORED	CONVERTER LOCK-UP SOLENOID VALVE CIRCUIT CC.1 : Short circuit to + 12 V CO.0 : Open circuit or short circuit to earth

NOTES	**Conditions for applying the fault finding procedure to stored faults:** The fault is declared present after: – the computer fault memory has been cleared, – the ignition has been switched off and on again, – the engine has been started and left running for **1 minute** in Neutral.

CC.1	***NOTES***	None

Switch off the ignition, disconnect the **6-track** connector under the automatic gearbox and **measure the resistance** of the winding of the lock-up solenoid valve between **track 5** and **track 2** on the solenoid valve side. If the resistance measured is not approximately **5.5 ± 0.5 Ω at 20°C**, remove the gearbox sump and take the same measurement directly from the solenoid valve. If the resistance is incorrect, replace the 3 solenoid valves (LS, LT and converter lock-up). If the resistance is correct, repair or replace the wiring in question.

Check the continuity of the connections between:

Computer connector track 6 → Track 5 of the hydraulic unit 6-track connector.
Computer connector track 18 → Track 2 of the hydraulic unit 6-track connector.

Also check the insulation between these connections.

Check the insulation against the **12 V** of the connections between:

Computer connector track 6 → Track 5 of the hydraulic unit 6-track connector.
Computer connector track 18 → Track 2 of the hydraulic unit 6-track connector.

Repair or replace the automatic gearbox wiring concerned if a fault occurs.

Check the connections on the automatic transmission computer and the **6-track** connector.
Carry out the required operations.

If the fault is still present after these checks, replace the 3 solenoid valves (lock-up, LS, LT).

AFTER REPAIR	Clear the computer memory, switch off the ignition, then carry out a road test. Finish the operation by checking with the diagnostic tool. Use the actuator sequential command in the **SCENARIO** menu.

GETtheMANUALS.org

DF090 **CONTINUED**	

CO.0	***NOTES***	**Special notes:** None.

Switch off the ignition, disconnect the **6-track** connector under the automatic gearbox and **measure the resistance** of the lock-up solenoid valve winding between **track 5** and **track 2** on the solenoid valve side.
If the resistance measured is not approximately **5.3 ± 0.3 Ω at 20°C**, remove the gearbox sump and take the same measurement on the solenoid valve itself. If the resistance is incorrect, replace the 3 solenoid valves (LS, LT and lock-up). If the resistance is correct, repair or replace the wiring in question.

Check the continuity of the connections between:

Computer connector track 6 → Track 5 of the hydraulic unit 6-track connector.
Computer connector track 18 → Track 2 of the hydraulic unit 6-track connector.

Also check the insulation between these connections.

Check the insulation against earth of the connections between:

Computer connector track 6 → Track 5 of the hydraulic unit 6-track connector.
Computer connector track 18 → Track 2 of the hydraulic unit 6-track connector.

Repair or replace the automatic gearbox wiring concerned if a fault occurs.

Check the connections on the automatic gearbox computer and the **6-track** connector.
Carry out the required operations.

If the fault is still present after these checks, replace the 3 solenoid valves (lock-up, LS, LT).

AFTER REPAIR	Clear the computer memory, switch off the ignition, then carry out a road test. Finish the operation by checking with the diagnostic tool. Use the actuator sequential command in the **SCENARIO** menu.

GETtheMANUALS.org

DF091 **STORED**	LS PRESSURE REGULATION SOLENOID VALVE CIRCUIT CC.1 : Short circuit to + 12 V CO.0 : Open circuit or short circuit to earth

NOTES	**Conditions for applying the fault finding procedure to stored faults:** The fault is declared present after: – the computer fault memory has been cleared, – the ignition has been switched off and on again, – the engine has been started and left running for **1 minute** in Neutral.

CC.1	***NOTES***	None

Switch off the ignition, disconnect the **8-track** connector under the automatic gearbox and **measure the resistance** of the winding of the LS pressure regulation solenoid valve between **track 6** and **track 2** on the solenoid valve side. If the resistance measured is not approximately **5.5 ± 0.5 Ω at 20°C**, remove the gearbox sump and take the same measurement directly from the solenoid valve. If the resistance is incorrect, replace the 3 solenoid valves (LS, LT and converter lock-up). If the resistance is correct, repair or replace the wiring in question.

Check the continuity of the connections between:

Computer connector track 5 → **Track 2 of the hydraulic unit 8-track connector.**
Computer connector track 20 → **Track 6 of the hydraulic unit 8-track connector.**

Also check the insulation between these connections.

Check the **12 V** insulation of the connections between:

Computer connector track 5 → **Track 2 of the hydraulic unit 8-track connector.**
Computer connector track 20 → **Track 6 of the hydraulic unit 8-track connector.**

Repair or replace the automatic gearbox wiring concerned if a fault occurs.

Check the connections on the automatic transmission computer and the **8-track** connector.
Carry out the required operations.

If the fault is still present after these checks, replace the 3 solenoid valves (lock-up, LS, LT).

AFTER REPAIR	Clear the computer memory, switch off the ignition, then carry out a road test. Finish the operation by checking with the diagnostic tool. Use the actuator sequential command in the **SCENARIO** menu.

GETtheMANUALS.org

DF091 **CONTINUED**	

CO.0	***NOTES***	**Special notes:** None.

Switch off the ignition, disconnect the **8-track** connector under the automatic gearbox and **measure the resistance** of the LS pressure regulation solenoid valve winding between **track 6** and **track 2** on the solenoid valve side. If the resistance measured is not approximately **5.3 ± 0.3 Ω at 20°C**, remove the gearbox sump and take the same measurement on the solenoid valve itself. If the resistance is incorrect, replace the 3 solenoid valves (LS, LT and lock-up). If the resistance is correct, repair or replace the wiring in question.

Check the continuity of the connections between:

Computer connector track 5 → **Track 2 of the hydraulic unit 8-track connector.**
Computer connector track 20 → **Track 6 of the hydraulic unit 8-track connector.**

Also check the insulation between these connections.

Check the earth insulation of the connections between:

Computer connector track 5 → **Track 2 of the hydraulic unit 8-track connector.**
Computer connector track 20 → **Track 6 of the hydraulic unit 8-track connector.**

Repair or replace the automatic gearbox wiring concerned if a fault occurs.

Check the connections on the automatic transmission computer and the **8-track** connector.
Carry out the required operations.

If the fault is still present after these checks, replace the 3 solenoid valves (lock-up, LS, LT).

AFTER REPAIR	Clear the computer memory, switch off the ignition, then carry out a road test. Finish the operation by checking with the diagnostic tool. Use the actuator sequential command in the **SCENARIO** menu.

GETtheMANUALS.org

DF092 **STORED**	LT PRESSURE REGULATION SOLENOID VALVE CIRCUIT CC.1 : Short circuit to + 12 V CO.0 : Open circuit or short circuit to earth

NOTES	**Conditions for applying the fault finding procedure to stored faults:** The fault is declared present after: – the computer fault memory has been cleared, – the ignition has been switched off and on again, – the engine has been started and left running for **1 minute** in Neutral.

CC.1	***NOTES***	None

Switch off the ignition, disconnect the **6-track** connector under the automatic gearbox and **measure the resistance** of the winding of the LT pressure regulation solenoid valve between **track 4** and **track 1** on the solenoid valve side. If the resistance measured is not approximately **5.5 ± 0.5 Ω at 20°C**, remove the gearbox sump and take the same measurement directly from the solenoid valve. If the resistance is incorrect, replace the 3 solenoid valves (LS, LT and converter lock-up). If the resistance is correct, repair or replace the wiring in question.

Check the continuity of the connections between:

Computer connector track 4 ⟶ **Track 1 of the hydraulic unit 6-track connector.**
Computer connector track 19 ⟶ **Track 4 of the hydraulic unit 6-track connector.**

Also check the insulation between these connections.

Check the insulation against **12 V** of the connections between:

Computer connector track 4 ⟶ **Track 1 of the hydraulic unit 6-track connector.**
Computer connector track 19 ⟶ **Track 4 of the hydraulic unit 6-track connector.**

Repair or replace the automatic gearbox wiring concerned if a fault occurs.

Check the connections on the automatic transmission computer and the **6-track** connector.
Carry out the required operations.

If the fault is still present after these checks, replace the 3 solenoid valves (lock-up, LS, LT).

AFTER REPAIR	Clear the computer memory, switch off the ignition, then carry out a road test. Finish the operation by checking with the diagnostic tool. Use the actuator sequential command in the **SCENARIO** menu.

GETtheMANUALS.org

DF092 **CONTINUED**	

CO.0	***NOTES***	**Special notes:** None.

Switch off the ignition, disconnect the **6-track** connector under the automatic gearbox and **measure the resistance** of the LT pressure regulation solenoid valve winding between **track 4** and **track 1** on the solenoid valve side. If the resistance measured is not approximately **5.3 ± 0.3 Ω at 20°C**, remove the gearbox sump and take the same measurement on the solenoid valve itself. If the resistance is incorrect, replace the 3 solenoid valves (LS, LT and lock-up). If the resistance is correct, repair or replace the wiring in question.

Check the continuity of the connections between:

Computer connector track 4 → **Track 1 of the hydraulic unit 6-track connector.**
Computer connector track 19 → **Track 4 of the hydraulic unit 6-track connector.**

Also check the insulation between these connections.

Check the insulation against earth of the connections between:

Computer connector track 4 → **Track 1 of the hydraulic unit 6-track connector.**
Computer connector track 19 → **Track 4 of the hydraulic unit 6-track connector.**

Repair or replace the automatic gearbox wiring concerned if a fault occurs.

Check the connections on the automatic transmission computer and the **6-track** connector.
Carry out the required operations.

If the fault is still present after these checks, replace the 3 solenoid valves (lock-up, LS, LT).

AFTER REPAIR	Clear the computer memory, switch off the ignition, then carry out a road test. Finish the operation by checking with the diagnostic tool. Use the actuator sequential command in the **SCENARIO** menu.

GETtheMANUALS.org

DF093 STORED	ONE-TOUCH MANUAL CONTROL CIRCUIT 1.DEF : Consistency

NOTES	**Conditions for applying the fault finding strategy to the stored fault: ET069** and **ET070** closed with the lever in P, R, N, D position. The fault is declared present after the engine has been started and left running for **45 seconds**.

Check with the lever in position P or R or N that statuses **ET069** and **ET070** are not shown as closed. What is the representative status of a fault?

ET069	Check that the one-touch switch **6-track** connector is correctly connected and in good condition. – Check the **insulation** between **tracks A3 and A2** on the one-touch switch side. If there is continuity, replace the one-touch manual control switch. – **Check the continuity and insulation** against earth between **track 41** on the computer side and **track A3** of the switch connector. Repair or replace the wiring.
ET070	Check that the one-touch switch **6-track** connector is correctly connected and in good condition. – Check the **insulation** between **tracks B3 and A2** on the one-touch switch side. If there is continuity, replace the one-touch manual control switch. – **Check the continuity and insulation** against earth **between track 26** on the computer side and **track B3** of the switch connector. Repair or replace the wiring.

AFTER REPAIR	Clear the computer memory, switch off the ignition, then carry out a road test. Complete the operation by testing with the diagnostic tool.

GETtheMANUALS.org

DF094 **STORED**	MULTIFUNCTION SWITCH CIRCUIT 1.DEF : Consistency

NOTES	**Conditions for applying the fault finding procedure to stored faults:** The fault is declared present after: – the computer fault memory has been cleared, – the ignition has been switched off and on again, – the engine has been started and running for **30 seconds**.
	Special notes: ignore the value indicating the lever position displayed on the instrument panel.

Check the fitting and setting of the multifunction switch on the automatic gearbox (consult the checking procedure).

Switch off the ignition and disconnect the **10-track** connector under the automatic gearbox.
Check for the presence of **earth** on **track 10** of the multifunction switch connector.
For each locked position of the selector lever, check for the necessary continuity and insulation (see the table below).

Locked lever position	Check continuity between	Check insulation between
P	Tracks 6 and 7 / Track 10 Track 4 / Track 1	Tracks 5 and 8 / Track 10 Track 2 / Track 3
D	Tracks 5 and 8 / Track 10	Tracks 6 and 7 / Track 10 Track 4 / Track 1 Track 2 / Track 3
R	Tracks 6 and 5 / Track 10 Track 2 / Track 3	Tracks 3 and 7 / Track 10 Track 1 / Track 4
N	Tracks 5 and 7 / Track 10 Track 4 / Track 1	Tracks 8 and 6 / Track 10 Track 2 / Track 3

AFTER REPAIR	Clear the computer memory, switch off the ignition, then carry out a road test. Complete the operation by testing with the diagnostic tool.

GETtheMANUALS.org

DF094 **CONTINUED**	

If one of the insulation or continuity checks is not correct, replace the Multifunction switch (refer to the replacement procedure).

If the multifunction switch is not faulty, check the continuity and insulation against earth on the following connections:

Computer connector track 35 → **Track 6 of the 10-track connector on the wiring harness side.**

Computer connector track 7 → **Track 5 of the 10-track connector on the wiring harness side.**

Computer connector track 21 → **Track 8 of the 10-track connector on the wiring harness side.**

Computer connector track 36 → **Track 7 of the 10-track connector on the wiring harness side.**

Also check the insulation between all these connections.

AFTER REPAIR	Clear the computer memory, switch off the ignition, then carry out a road test. Complete the operation by testing with the diagnostic tool.

GETtheMANUALS.org

DF095 **STORED**	SELECTOR LEVER LOCK ELECTROMAGNET CIRCUIT CC.0 : Short circuit to earth CO.1 : Open circuit or short circuit to + 12 V

NOTES	**Conditions for applying the fault finding procedure to stored faults:** The fault is declared present after: – the computer fault memory has been cleared, – the ignition has been switched off and on again, – the engine has been started and left running for **30 seconds** in Park.

CO.1	***NOTES***	None

Switch off the ignition and disconnect the **6-track** connector in the central console. Check the wiring and condition of the connections. Measure the **resistance** of the lever locking electromagnet winding between **tracks B1 and B2** of the electromagnet connector. If the resistance measured is not approximately **37 ± 2 Ω at 20°C**, replace the electromagnet.

Check the **continuity and insulation** against **+ 12 volts** between **track 32** of the computer connector and **track B2** of the control lever connector.

Check the presence of **+ 12 V on track B1** of the control lever connector.

If the fault is still present, replace the electromagnet assembly and any connection wires.

CC.0	***NOTES***	None

Switch off the ignition and disconnect the 6-track connector in the central console. Check the wiring and condition of the connections. Measure the **resistance** of the lever locking electromagnet winding between **tracks B1 and B2** of the electromagnet connector. If the resistance measured is not approximately **37 ± 2 Ω at 20°C**, replace the electromagnet.

Check the **continuity and insulation** against **earth** on the connection between **track 32** of the computer connector and **track B2** of the electromagnet connector.

Check that **+ after ignition feed** is present on **track B1** of the electromagnet connector.

If the fault is still present, replace the electromagnet assembly and any connection wires.

AFTER REPAIR	Clear the computer memory, switch off the ignition, then carry out a road test. Complete the operation by testing with the diagnostic tool.

GETtheMANUALS.org

DF096 STORED	COMPUTER SUPPLY VOLTAGE 1.DEF : Supply voltage too low

NOTES	Check the battery charge.

Check the automatic gearbox fuses.

Check the **continuity** between **track 29** of the computer connector and the **fuse board** connector and **track 30** of the computer connector and the **fuse board** connector.

Check the tightness of the earthing straps to the vehicle and the tightness of the supplies.

AFTER REPAIR	Clear the computer memory, switch off the ignition, then carry out a road test. Complete the operation by testing with the diagnostic tool.

GETtheMANUALS.org

DF097 STORED	CONVERTER LOCK-UP 1.DEF : Clutch slippage 2.DEF : Clutch judder

NOTES	**Processing priority in the event of a number of faults:** Deal with fault **DF090** Converter lock-up solenoid valve circuit first if it is present.
	Conditions for applying the fault finding procedure to stored faults: The fault is declared present after a road test.

Switch off the ignition, disconnect the **6-track** connector under the automatic gearbox and **measure the resistance** of the lock-up solenoid valve winding between **earth** and **track 2** on the solenoid valve side.
If the resistance measured is not approximately **5.3 ± 0.3 Ω at 20°C**, remove the gearbox sump and take the same measurement on the solenoid valve itself. If the resistance is incorrect, replace the 3 solenoid valves (LS, LT and lock-up). If the resistance is correct, repair or replace the wiring in question.

If the fault is still present after these checks, replace the hydraulic distributor.

AFTER REPAIR	Clear the computer memory, switch off the ignition, then carry out a road test. Complete the operation by testing with the diagnostic tool.

GETtheMANUALS.org

DF098 TO DF103 STORED	CONSISTENCY BETWEEN SPEED AND 1/2/3/4/5 GEARS 1.DEF : Consistency

NOTES	**Conditions for applying the fault finding procedure to stored faults:** The fault is declared present after a road test.

Hydraulic or mechanical fault. Replace the gearbox.

AFTER REPAIR	Clear the computer memory, switch off the ignition, then carry out a road test. Complete the operation by testing with the diagnostic tool.

GETtheMANUALS.org

DF104 STORED	SEQUENCE SOLENOID VALVE EVS3 1.DEF : Hydraulic fault

NOTES	**Conditions for applying the fault finding procedure to stored faults:** The fault is declared present after a road test.

Hydraulic fault. Replace the hydraulic distributor.

AFTER REPAIR	Clear the computer memory, switch off the ignition, then carry out a road test. Complete the operation by testing with the diagnostic tool.

GETtheMANUALS.org

DF105 **STORED**	DECLUTCHING ON HALT FUNCTION 1.DEF : Clutch C1 engaged 2.DEF : Clutch C1 disengaged 3.DEF : Engine racing 4.DEF : Clutch slippage

NOTES	**Conditions for applying the fault finding procedure to stored faults:** The fault is declared present after: – the computer fault memory is cleared, – the ignition has been switched off and on again, – the engine has been started and left running for **30 seconds** in Drive with the brake pedal depressed.

Clutch C1 mechanical fault. Replace the gearbox.

AFTER REPAIR	Clear the computer memory, switch off the ignition, then carry out a road test. Complete the operation by testing with the diagnostic tool.

GETtheMANUALS.org

DF106 **PRESENT**	CHANGING GEAR

NOTES	**Conditions for applying the fault finding procedure to stored faults:** The fault is declared present after a road test.

Hydraulic or mechanical fault. Replace the gearbox.

AFTER REPAIR	Clear the computer memory, switch off the ignition, then carry out a road test. Complete the operation by testing with the diagnostic tool.

GETtheMANUALS.org

DF110 **STORED**	INJECTION MULTIPLEX SIGNAL 1.DEF : No injection signals on multiplex network

NOTES	**Conditions for applying the fault finding procedure to stored faults:** The fault is declared present after the engine is started.

Run the multiplex network test.

AFTER REPAIR	Clear the computer memory, switch off the ignition, then carry out a road test. Complete the operation by testing with the diagnostic tool.

GETtheMANUALS.org

DF172 **STORED**	INVALID INJECTION MULTIPLEX SIGNALS 1.DEF : Faulty injection engine speed signal

NOTES	**Conditions for applying the fault finding procedure to stored faults:** The fault is declared present after the engine is started.

Run the multiplex network test.

AFTER REPAIR	Clear the computer memory, switch off the ignition, then carry out a road test. Complete the operation by testing with the diagnostic tool.

GETtheMANUALS.org

NOTES	Only perform this conformity check after a complete check with the diagnostic tool.

Order	Function	Parameter or status checked or action	Display and notes	Fault finding
1	Diagnostic tool dialogue		Automatic gearbox SU2001	ALP 1
2	Selector lever position detection	**ET012:** Selector lever position	**P** = Park **R** = Reverse **N** = Neutral **D** = Drive	**DF094**
3	Lever contact operation in **P** position	**ET043:** Lever contact no. 0 **ET044:** Lever contact no. 1 **ET045:** Lever contact no. 2 **ET046:** Lever contact no. 3	**Closed** Open Open **Closed**	**DF094**
4	Lever contact operation in **R** position	**ET043:** Lever contact no. 0 **ET044:** Lever contact no. 1 **ET045:** Lever contact no. 2 **ET046:** Lever contact no. 3	**Closed** **Closed** Open Open	**DF094**
5	Lever contact operation in **N** position	**ET043:** Lever contact no. 0 **ET044:** Lever contact no. 1 **ET045:** Lever contact no. 2 **ET046:** Lever contact no. 3	Open **Closed** Open **Closed**	**DF094**
6	Lever contact operation in **D** position	**ET043:** Lever contact no. 0 **ET044:** Lever contact no. 1 **ET045:** Lever contact no. 2 **ET046:** Lever contact no. 3	Open **Closed** **Closed** Open	**DF094**

GETtheMANUALS.org

NOTES	Only perform this conformity check after a complete check with the diagnostic tool.

Order	Function	Parameter or status checked or action	Display and notes	Fault finding
7	Gear engaged	**ET013:** Gear engaged	In: P = P - N In: R = R In D or in Manual mode: D = 1 to 5 In Manual mode: 1 to 5	**NONE**
8	Detection that brake pedal is depressed	**ET018:** Brake pedal	Status 1 confirmed (brake pedal depressed)	**ET018**
9	Detection that brake pedal is released	**ET018:** Brake pedal	Status 2 confirmed (brake pedal released)	**ET018**
10	Detection that a higher gear is requested	**ET069:** Higher gear one-touch switch (held down)	One-touch switch higher gear open status confirmed	**DF093**
11	Detection that a lower gear is requested	**ET070:** Lower gear one-touch switch (pulled out)	One-touch switch lower gear open status confirmed	**DF093**
12	Kickdown switch	**ET005:** Kickdown switch	Active kickdown status confirmed after the pedal has passed the point of resistance	**ET005**

GETtheMANUALS.org

NOTES	Only perform this conformity check after a complete check with the diagnostic tool.

Order	Function	Parameter or status checked or action		Display and notes	Fault finding
13	Selector lever locking function	**ET074:**	Lever lock electromagnet control	The function is active with the lever in Park, the ignition on and with brake pedal movement.	**ET018** **DF094**
14	Actuator control	**AC024:**	Actuator sequential control with selector lever in **P** or **N**	Interpret screen displaying statuses of faulty circuits	**DF085** **DF086** **DF087** **DF088** **DF089** **DF090** **DF091** **DF092** **DF095**

GETtheMANUALS.org

ET018	BRAKE PEDAL

NOTES	**Special notes:** Only carry out the checks if the depressed and released statuses are not consistent with the position of the pedal.

STATUS 2 Released: Brake pedal depressed.

If brake lights operate:

Check and ensure the continuity of the connection between **track B3** of the brake light switch connector and **track 25** of the computer connector.

If the brake lights do not operate:

Check the condition and fitting of the brake light switch and brake lights fuse.
Remove the brake light switch and check that it is operating correctly:

	Continuity between tracks	Insulation between tracks
Switch depressed (Brake pedal released)	**A1** and **B3**	**A3** and **B1**
Switch released (Brake pedal depressed)	**A3** and **B1**	**A1** and **B3**

Replace the switch if necessary.

Check the presence of **+ after ignition feed** on **tracks A1 and B1** of the brake light switch connector.

AFTER REPAIR	Carry out a road test followed by a check with the diagnostic tool.

GETtheMANUALS.org

ET018 **CONTINUED**	

STATUS 1 Depressed: Brake pedal released.

Check the condition and fitting of the brake light switch and brake lights fuse.

Remove the brake light switch and check that it is operating correctly:

	Continuity between tracks	Insulation between tracks
Switch depressed (Brake pedal released)	**A1** and **B3**	**A3** and **B1**
Switch released (Brake pedal depressed)	**A3** and **B1**	**A1** and **B3**

Replace the switch if necessary.

Check the presence of **+ after ignition feed** on **tracks A1 and B1** of the brake light switch connector.

Check and ensure insulation against **12 V** on the connection between **track B3** of the brake light switch connector and **track 25** of the computer connector.

AFTER REPAIR	Carry out a road test followed by a check with the diagnostic tool.

GETtheMANUALS.org

ET005	KICKDOWN

NOTES	**Special notes:** None.

Check the change in the pedal signal using **PR022**.

Correct signal:

No **L**oad: Value between **0 and 16**

Full **L**oad: Value between **224 and 253**

If the value is incorrect, refer to the injection fault finding strategy for information on pedal position sensor faults.

AFTER REPAIR	Clear the computer memory, switch off the ignition, then carry out a road test. Complete the operation by testing with the diagnostic tool.

GETtheMANUALS.org

PR022	ACCELERATOR PEDAL POSITION

NOTES	**Special notes:** None.

Check the change in the pedal signal using **PR022**.

Correct signal:

No **L**oad: Value between **0 and 16**

Full **L**oad: Value between **224 and 253**

If the value is incorrect, refer to the injection fault finding strategy for information on pedal position sensor faults.

AFTER REPAIR	Clear the computer memory, switch off the ignition, then carry out a road test. Complete the operation by testing with the diagnostic tool.

GETtheMANUALS.org

REPLACING THE COMPUTER

After replacing the computer, it is important to test drive the vehicle performing all gear changes, both up and down, several times in order to store the new auto-adaptive parameter values.

SPECIAL FEATURES OF COMPONENT REPLACEMENT:

The SU1 2001 automatic gearbox computer uses auto-adaptive parameters for gear-change management and the converter lock-up function.

These auto-adaptive parameters enable the pressure and refill intervals for the brakes and clutches to be optimised as a function of the specific mechanical/hydraulic characteristics of each automatic gearbox. Therefore, replacing any components that influence these parameters requires the stored values to be updated. Using the diagnostic tool, run command RZ005 to reset the auto-adaptives. After using this command, it is essential to test drive the vehicle performing all gear changes, both up and down, several times in order to store the new values.

Reset the auto-adaptive parameters after replacing the following components:
– Hydraulic distributor.
– Torque converter.
– Solenoid valves (EVS1, EVS2, EVS3, EVS4, EVS5).
– 3 solenoid valves (converter lock-up, LS pressure regulation, LT pressure regulation).
– Complete automatic gearbox.

GETtheMANUALS.org

NOTES	Only consult the customer complaint section after a complete check with the diagnostic tool and a conformity check.

No dialogue with the tool

- **No dialogue with the computer** — **ALP 1**

Instrument panel faults

- **Perform the multiplex network test and then refer to the instrument panel fault finding section.**

Engine starting faults

- **The starter motor does not operate when the selector lever is in position P and/or N** — **ALP 2**
- **The starter turns, the engine does not start, the instrument panel lights dim, lever in N.** — **ALP 3**
- **The starter motor operates when the selector lever is at positions other than P or N** — **ALP 4**
- **Vehicle advances or reverses with the lever in position N (more than it should when creeping under 60°C)**. — **ALP 5**

Gear changing faults

- **Erratic gear changes** — **ALP 6**
- **No changing down in full load position** — **ALP 7**

AUTOMATIC GEARBOX
Fault finding - Customer complaints

GETtheMANUALS.org

NOTES	Only consult the customer complaint section after a complete check with the diagnostic tool and a conformity check.

Automatic gearbox operating faults — **ALP 8**

- **No drive in forward or reverse gears**
- **Delayed engagement with engine racing followed by a jolt when started**
- **The vehicle moves sluggishly when started**
- **Jolts, slippage or engine racing when changing gear**
- **No gear change possible, vehicle stuck in one gear**
- **One or more of the gears cannot be selected**
- .....

Other faults

- **Reversing lights do not work** — **ALP 9**
- **Oil present under vehicle** — **ALP 10**

GETtheMANUALS.org

ALP 1	No dialogue with the computer

NOTES	Only consult the customer complaint section after a complete check with the diagnostic tool and a conformity check.

Try to establish dialogue with a computer on another vehicle to check that the diagnostic tool is not faulty. If the tool is not causing the fault and dialogue cannot be established with any other computer on the same car, it may be that a faulty computer is disrupting diagnostic line **K**.

Proceed by successive disconnections to locate this computer.

Check the battery voltage and carry out any operations necessary to obtain a correct voltage **(9.5. < battery voltage < 17.5 V).**

Check that the automatic gearbox supply fuse is present on the passenger compartment fuse board and in good condition.

Check that the computer connector is properly connected and check the condition of its connections.

Check the automatic gearbox **earths**.

Check that the computer is correctly supplied:
– **Earth on tracks 1 and 15** of the 42-track computer connector.
– **+ after ignition on track 29** of the 42-track computer connector.

Check that the power supply to the diagnostic socket is correct:
– + before ignition feed on track 16.
– Earth on track 5

Check / ensure continuity and the insulation of the connections between:

Computer connector track 8 ⟶ **Track 7 diagnostic socket**

If dialogue is still not established after these various checks, replace the automatic gearbox computer.

AFTER REPAIR	Check using the diagnostic tool.

GETtheMANUALS.org

ALP 2	The starter motor does not operate with the selector lever in position P and/or N

NOTES	Only consult the customer complaint section after a complete check with the diagnostic tool and a conformity check.

Switch on the diagnostic tool.
Check at **ET012** the consistency between the diagnostic tool display and the selector lever locked positions (with the ignition on and the engine stopped).

Is it consistent?

no → Does the engine start?

yes ↓

Switch off the ignition and disconnect the multifunction switch 10-track connector under the automatic gearbox.
Operate the starter and check to see if there is a **12 volt** supply on track 1 of the connector on the vehicle wiring harness side.

Is there 12 V on track 1?

no → Check the continuity of the connection between **track 1** of the connector and the starter switch.
Ensure that the ignition switch is working properly.

yes ↓

Switch off the ignition and check the continuity between tracks 1 and 4 of the multifunction switch on the gearbox side with the lever in positions P and N.
If continuity is not provided, replace the multifunction switch.
If continuity is correct, check the continuity between track 4 of the connector on the vehicle wiring side and the starter motor.

Keep the starter cranking and move the selector lever with the brakes applied.

Does the engine start?

yes → Adjust the automatic gearbox control following the procedure described in the Workshop Repair Manual.

no ↓

Check the multifunction switch mounting, the tightness of the two locking bolts on the gearbox control cable then adjust the control.
If the fault is still present, replace the multifunction switch.

AFTER REPAIR	Carry out a road test then check with the diagnostic tool.

GETtheMANUALS.org

ALP 3	**The starter motor turns the engine, but the engine does not start, the instrument panel lights dim, selector lever in position N.**

NOTES	Only consult the customer complaint section after a complete check with the diagnostic tool and a conformity check.

With the handbrake released, does the vehicle start sluggishly when the starter runs?

no → Check the battery charge and the charge circuit operation.

yes ↓

Check the condition of the oil (colour, odour, etc.). Replace the automatic gearbox if the condition of the oil suggests there is an internal fault.

ALP 4	**The starter motor runs when the selector lever is in a position other than P or N**

NOTES	Only consult the customer complaint section after a complete check with the diagnostic tool and a conformity check.

Check the consistency between the display and the selector lever locked positions at **ET012** or using the instrument panel display (with the ignition on and the engine stopped).
Adjust the automatic gearbox if there is inconsistency.
Replace the multifunction switch if there is consistency (P/N switch faulty).

Adjusting and replacement procedures are described in the Workshop Repair Manual.

AFTER REPAIR	Carry out a road test then check with the diagnostic tool.

GETtheMANUALS.org

ALP 5	**Vehicle advances or reverses with the selector lever in position N (more than it should when creeping with the oil below 60°C)**.

NOTES	Only consult the customer complaint section after a complete check with the diagnostic tool and a conformity check.

Check the consistency between the display and the selector lever locked positions at **ET012** on the diagnostic tool or using the instrument panel display (with the ignition on and the engine stopped).

Is it consistent?

no → Adjust the control following the recommendations given in the Workshop Repair Manual. Replace the multifunction switch if necessary.

yes ↓

Check the condition of the oil (colour, odour, etc.).

Does the condition of the oil suggest there is an internal fault with the automatic gearbox?

yes → Replace the automatic gearbox.

no ↓

The cause may have been misdiagnosed.

AFTER REPAIR	Carry out a road test then check with the diagnostic tool.

GETtheMANUALS.org

ALP 6	Erratic gear changes

NOTES	Only consult the customer complaint section after a complete check with the diagnostic tool and a conformity check.

Switch on the diagnostic tool.
Use function **ET013** during a road test, with the selector lever in position D.

Is the customer complaint reproduced?

- no → B
- yes ↓

Is dialogue lost when the fault appears?

- yes → Refer to the fault finding strategy relating to lack of dialogue with the tool (ALP 1).
- no ↓

Does status ET018 change when the fault appears, without the brake pedal being depressed?

- yes → Adjust the brake switch and check the operation of the brake pedal return spring.
- no ↓

Does the display for the selector lever position change when the fault appears? (position D disappears)

- no → B
- yes ↓

Check the adjustment of the external control.
If the fault is still present, replace the multifunction switch.

AFTER REPAIR	Carry out a road test then check with the diagnostic tool.

GETtheMANUALS.org

ALP 6 CONTINUED	

NOTES	Only consult the customer complaint section after a complete check with the diagnostic tool and a conformity check.

B

Check how the automatic transmission wiring is routed (high voltage interference).
Modify if necessary.

Check the load signal with the engine stopped.
Accelerate slowly and check the load change **PR022**.

Is the load change regular?

no → Refer to the injection fault finding procedure and check the load potentiometer operation.

yes

Perform an injection operation check
Apply the checks outlined in the relevant fault finding procedure if there is a fault.

Check the engine speed signal in **PR006** during a road test at a steady speed.

Is the engine speed value constant?

no → Refer to the injection fault finding procedure and check the TDC sensor operation.

yes

The cause may have been misdiagnosed.

AFTER REPAIR	Carry out a road test then check with the diagnostic tool.

GETtheMANUALS.org

ALP 7	No changing down in full load position

NOTES	Only consult the customer complaint section after a complete check with the diagnostic tool and a conformity check.

Check the conformity and settings of the accelerator control (consult the Workshop Repair Manual).

Is the accelerator control correct?

- no → Adjust the accelerator control again as shown in the Workshop Repair Manual.
- yes ↓

Check the load signal with the engine stopped: Accelerate slowly and check the load change in **PR022**.

Is the load change regular?

- no → Refer to the injection fault finding procedure and check the load potentiometer.
- yes ↓

Check the operation of **ET005**:
Depress the accelerator pedal quickly.

Is ET005 active?

- no → Refer to **PR022**
- yes ↓

The cause may have been misdiagnosed.

AFTER REPAIR	Carry out a road test then check with the diagnostic tool.

GETtheMANUALS.org

ALP 8	Automatic gearbox operating faults

NOTES	Only consult the customer complaint section after a complete check with the diagnostic tool and a conformity check.

Check the consistency between the display and the selector lever locked positions in **ET012** on the diagnostic tool or on the instrument panel display (ignition on and engine stopped).

Is it consistent?

- no → Adjust the control following the recommendations given in the Workshop Repair Manual.
- yes ↓

Check the oil level and the condition of the oil (colour, odour, etc.).

Does the condition of the oil suggest there is an internal fault in the automatic gearbox?

- yes → Replace the automatic gearbox.
- no ↓

Top up if necessary. Start the engine.
With the brakes applied, shift the selector lever to D and monitor the vehicle speed signal in **PR105** while accelerating.

Does the vehicle speed signal change?

- yes → Replace the automatic gearbox.
- no ↓

Fit a pressure gauge and check the line pressure with the engine at idle speed and the selector lever in position N.

Is the pressure zero?

- yes → Replace the automatic gearbox.
- no ↓

With the engine at idle speed and the selector lever in position N, read the line pressure (correct values between 3.5 and 4.2).

↓ (A)

AFTER REPAIR	Carry out a road test then check with the diagnostic tool.

GETtheMANUALS.org

ALP 8 CONTINUED 1	

NOTES	Only consult the customer complaint section after a complete check with the diagnostic tool and a conformity check.

(A)

Run the engine to obtain an oil temperature greater than **60°C** in **PR004**.
Put the selector lever in position D with the engine at idle speed and the brakes applied.

Is the line pressure more than 0.2 bar below the pressure reading with the lever in N?

yes → Replace the automatic gearbox.

no

Refer to the procedure and the safety instructions in the Technical Note for carrying out a stall test on the converter. Carry out this check with the lever in position D and then R, observing the line pressure and the engine speed.
Theoretical values of line pressure at the setting point:
– 12 bar in D (10.6 to 13.6),
– 18 bar in R (16.3 to 20.5).

Are the pressure values correct?

no → Replace the hydraulic distributor and the solenoid valves.
Replace the automatic gearbox if the pressure continues to be incorrect (pressure too low).

yes

Theoretical values of engine speed at the setting point:
– **G9T and P9X engines: 2403 ± 150 rpm**
– **F4Rt engines: 2661 ± 150 rpm**
– **V4Y engines: 2755 ± 150 rpm**

Is the stall speed value correct?

no → Replace the torque converter (replace the automatic gearbox if the stall speed **is more than 300 rpm** above the correct value).
Replace the automatic gearbox if the stall speed continues to be incorrect.
Note: a stall speed which is too low may be linked to a lack of engine power.

yes

(B)

AFTER REPAIR	Carry out a road test then check with the diagnostic tool.

GETtheMANUALS.org

ALP 8 CONTINUED 2	

NOTES	Only consult the customer complaint section after a complete check with the diagnostic tool and a conformity check.

B

Carry out a road test observing the engine speed on the instrument panel and the indications given by the diagnostic tool in **ET012** (refer to the help section).

Does the engine speed change each time there is a gear change?

no → Replace the hydraulic distributor and the solenoid valves.

yes

The checks carried out have not provided any evidence of a fault and the automatic gearbox appears to be working correctly. If the vehicle does show the customer complaint selected, continue with the entire fault finding procedure.

AFTER REPAIR	Carry out a road test then check with the diagnostic tool.

GETtheMANUALS.org

ALP 9	Reversing lights do not work (reverse gear works and the bulbs are sound)

NOTES	Only consult the customer complaint section after a complete check with the diagnostic tool and a conformity check.

Switch off the ignition and disconnect the 10-track connector under the automatic gearbox.
Switch the ignition on again and check to see if + after ignition feed is present on **track 3** of the connector on the vehicle wiring harness side.

Is the + after ignition feed present on track 3?

no → Check the continuity of the connection between **track 3** of the 10-track connector and the passenger compartment connection unit.

yes ↓

Switch off the ignition and check the continuity between **tracks 2** and **3** of the connector on the gearbox side with the lever in position R.
If continuity is not provided, replace the multifunction switch. If continuity is correct, check the continuity between **track 2** of the connector on the vehicle wiring harness side and the reversing lights.
Also check the rear lights earth.

AFTER REPAIR	Carry out a road test then check with the diagnostic tool.

GETtheMANUALS.org

ALP 10	Oil present under vehicle

NOTES	Only consult the customer complaint section after a complete check with the diagnostic tool and a conformity check.

Wash the automatic gearbox, top up the oil level using the procedure described in the Workshop Repair Manual, dust with talcum powder, carry out a fault finding procedure and locate the source of the leak.
Deal with the source of the leak and replace the faulty components.
Check the oil level.

AFTER REPAIR	Carry out a road test then check with the diagnostic tool.

GETtheMANUALS.org

VEL SATIS

2 Transmission

23A AUTOMATIC TRANSMISSION

BVA SU4
Vdiag No.: 04

Fault finding - Introduction	23A - 1
Fault finding - System operation	23A - 8
Fault finding - Allocation of computer tracks	23A - 11
Fault finding - Replacement of components	23A - 14
Fault finding - Configurations and programming	23A - 15
Fault finding - Fault summary table	23A - 16
Fault finding - Interpretation of faults	23A - 19
Fault finding - Conformity check	23A - 111
Fault finding - Status summary table	23A - 134
Fault finding - Interpretation of statuses	23A - 135
Fault finding - Parameter summary table	23A - 140
Fault finding - Interpretation of parameters	23A - 141
Fault finding - Command summary table	23A - 156
Fault finding - Customer complaints	23A - 157
Fault finding - Fault Finding Chart	23A - 158
Fault finding - Test	23A - 164

DECEMBER 2005 **EDITION ANGLAISE**

"The repair procedures given by the manufacturer in this document are based on the technical specifications current when it was prepared.

The procedures may be modified as a result of changes introduced by the manufacturer in the production of the various component units and accessories from which his vehicles are constructed."

All rights reserved by Renault s.a.s.

Copying or translating, in part or in full, of this document or use of the service part reference numbering system is forbidden without the prior written authority of Renault s.a.s.

© Renault s.a.s. 2005

AUTOMATIC TRANSMISSION
Fault finding - Introduction

GETtheMANUALS.org

1. SCOPE OF THIS DOCUMENT

This document presents the fault finding procedure applicable to all computers with the following specifications:

Vehicle(s): **Vel Satis Ph2, Espace IV Ph2** *Engines:* **P9X** *Function concerned:* **Automatic transmission**	*Name of computer:* **BVA** *Program No.:***0000** *Vdiag No.:* **04**

2. PREREQUISITES FOR FAULT FINDING

Documentation type

Fault finding procedures (this manual):
- Assisted fault finding (integrated into the diagnostic tool), Dialogys.

Wiring Diagrams:
- Visu-Schéma (CD-ROM).

Type of diagnostic tools
- **CLIP + multiplex line sensor**

Special tooling required

Special tooling required
Multimeter

3. RECAP

To run fault finding on the vehicle computers, switch on the ignition.

- With the vehicle card in the card reader,
- press and hold the Start button (longer than 5 seconds) with start-up conditions not present,
- connect the diagnostic tool and perform the required operations.

To cut off the + after ignition feed, proceed as follows:

- Press the Start button twice briefly (less than 3 seconds),
- ensure that the + after ignition feed has been cut off by checking that the computer indicator lights on the instrument panel have gone out.

GETtheMANUALS.org

Faults

Faults are declared as either present or stored (depending on whether they appeared in a certain context and have disappeared since, or whether they remain present but have not been diagnosed within the current context).

The **present** or **stored** status of faults should be taken into consideration when the diagnostic tool is switched on after the + after ignition feed (without any system components being active).

For a **present fault**, apply the procedure described in the **Interpretation of faults** section.

For a **stored fault**, note the faults displayed and apply the instructions in the **Notes** section.

If the fault is **confirmed** when the instructions in the Notes section are applied, the fault is present. Deal with the fault

If the fault is **not confirmed**, check:
- the electrical lines which correspond to the fault,
- the connectors for these lines (for oxidation, bent pins, etc.),
- the resistance of the component detected as faulty,
- the condition of the wires (melted or split insulation, wear).

Conformity check

The aim of the conformity check is to check data that does not produce a fault on the diagnostic tool because the data is inconsistent. Therefore, this stage is used to:
- carry out fault finding on faults that do not have a fault display, and which may correspond to a customer complaint.
- check that the system is operating correctly and that there is no risk of a fault recurring after repairs.

This section gives the fault finding procedures for statuses and parameters and the conditions for checking them.

If a status is not behaving normally or a parameter is outside the permitted tolerance values, consult the corresponding fault finding page.

Customer complaints - Fault finding chart

If the test with the diagnostic tool is OK but the customer complaint is still present, the fault should be processed by **customer complaints**.

A synopsis of the general procedure to follow is provided on the following page in the form of a flow chart

GETtheMANUALS.org

4. FAULT FINDING PROCEDURE

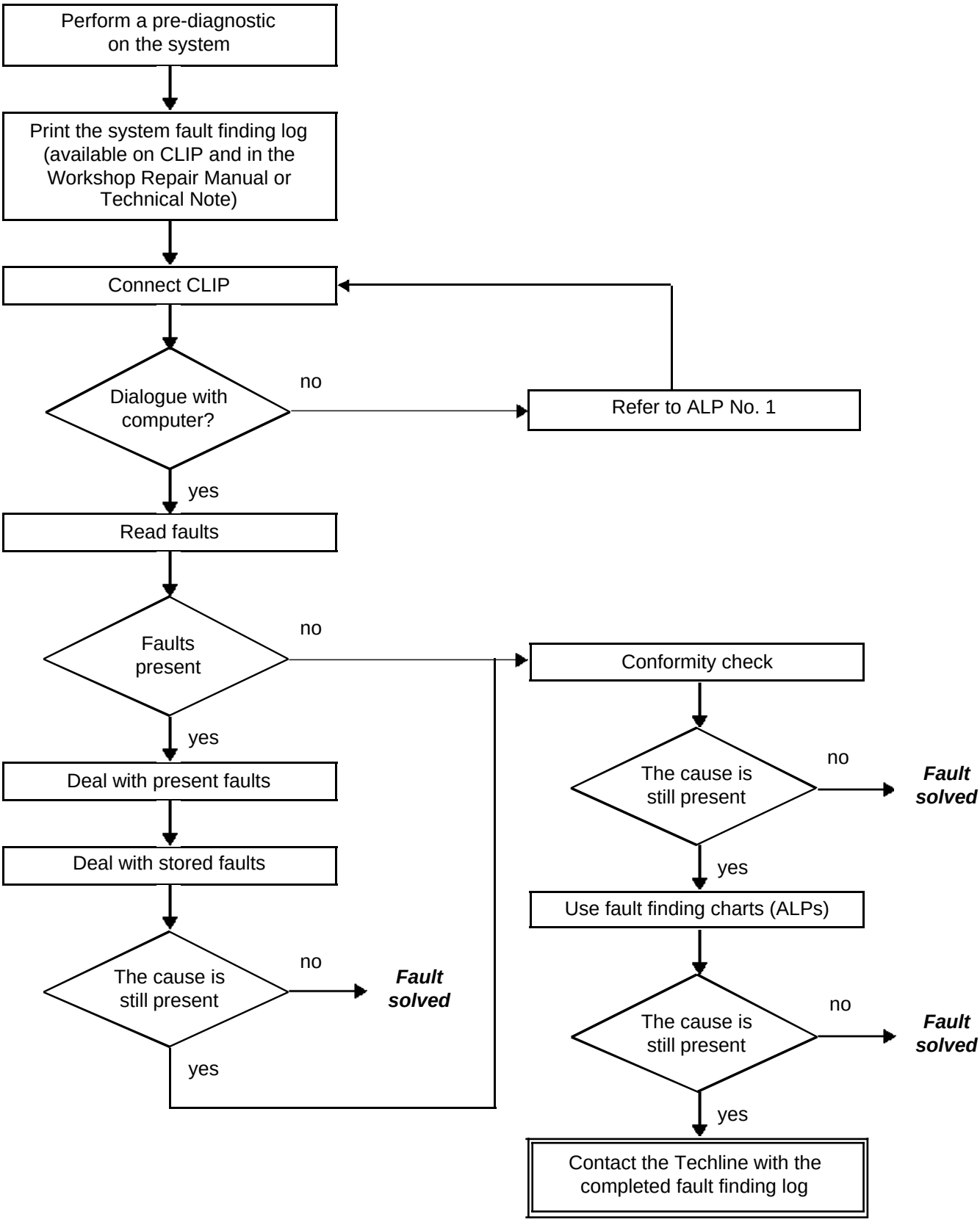

GETtheMANUALS.org

4. FAULT FINDING PROCEDURE (continued)

Wiring check

Fault finding problems
Disconnecting the connectors and/or manipulating the wiring harness may temporarily remove the cause of a fault.
Electrical measurements of voltage, resistance and insulation are generally correct, especially if the fault is not present when the analysis is made (stored fault).

Visual inspection
Look for damage under the bonnet and in the passenger compartment.
Carefully check the fuses, insulators and wiring harness routing.
Look for signs of oxidation.

Tactile inspection
While manipulating the wiring harness, use the diagnostic tool to note any change in fault status from stored to present.
Make sure that the connectors are properly locked.
Apply light pressure to the connectors.
Gently move the wiring harness.
If there is a change in status, try to locate the source of the fault.

Inspection of each component
Disconnect the connectors and check the appearance of the clips and tabs, as well as the crimping (no crimping on the insulating section).
Make sure that the clips and tabs are properly locked in the sockets.
Check that no clips or tabs have been dislodged during connection.
Check the clip contact pressure using an appropriate model of tab.

Resistance check
Check the continuity of entire lines, then section by section.
Look for a short circuit to earth, to **+ 12 V** or to another wire.

If a fault is detected, repair or replace the wiring harness.

GETtheMANUALS.org

5. FAULT FINDING LOG

IMPORTANT!

IMPORTANT
Any fault on a complex system requires thorough fault finding with the appropriate tools. The FAULT FINDING LOG, which should be completed during the procedure, enables you to keep track of the procedure which is carried out. It is an essential document when consulting the manufacturer.

IT IS THEREFORE MANDATORY TO FILL OUT A FAULT FINDING LOG EACH TIME FAULT FINDING IS CARRIED OUT.

You will always be asked for this log:

- when requesting technical assistance from Techline,
- for approval requests when replacing parts for which approval is mandatory,
- to be attached to monitored parts for which reimbursement is requested. The log is needed for warranty reimbursement, and enables better analysis of the parts removed.

6. SAFETY ADVICE

Safety rules must be observed during any work on a component to prevent any damage or injury:

- make sure that the battery is properly charged to avoid damaging the computers with a low load,
- use the appropriate tools.

GETtheMANUALS.org

FAULT FINDING LOG

System: Automatic transmission or sequential gearbox

List of monitored parts: ***Computer***

● Administrative identification

Date	2 0
Log completed by	
VIN	
Engine	
Diagnostic tool	CLIP
Update version	

● Customer complaint

	681	Gears not changing		622	Noise		679	No drive
	680	Slipping		675	Indicator light comes on		682	Loss of power
	683	Jolts or jerks		684	3H		685	Erratic gear change

Other — Your comments:

● Conditions under which the customer complaint occurs

	005	While driving		004	Intermittently		008	When decelerating
	007	When accelerating		009	Sudden fault		010	Gradual deterioration

Other — Your comments:

● Documentation used in fault finding

Fault finding procedure used	
Type of diagnostic manual:	Workshop Repair Manual ❑ Technical Note ❑ Assisted fault finding ❑
Fault finding manual no:	
Wiring diagram used	
Wiring Diagram Technical Note No:	
Other documentation	
Title and/or part number:	

RENAULT

FD 12
Fault finding log

GETtheMANUALS.org

FAULT FINDING LOG

System: Automatic transmission or sequential gearbox

● Computer identification and system parts replaced

Part 1 part no.	
Part 2 part no.	
Part 3 part no.	
Part 4 part no.	
Part 5 part no.	

To be read with the diagnostic tool (Identification screen):

Computer part no.	
Supplier no.	
Program no.	
Software version	
Calibration number	
VDIAG	

● Faults found with the diagnostic tool

Fault no.	Present	Stored	Fault name	Specification

● Conditions under which fault occurs

Status or parameter no.	Parameter name	Value	Unit

● System-specific information

Description:

● Additional information

Gearbox No.			
If the gearbox is automatic, which mode is it (automatic/sequential)?			
Gear changes affected?			
Result of the gearbox oil level check			
Result of the oil check using "Add-On"			
Appearance of the oil			
Oil leak?	No ❑	Seepage ❑	Droplets ❑
Location of the leak			
Type of noise (metallic, friction, etc.)			
Does the buzzer work?	Yes ❑	No ❑	
What factors led you to replace the computer? What other parts were replaced?			
Other defective functions?			
Your comments:			

RENAULT

FD 12
Fault finding log

GETtheMANUALS.org

System description

The SU4 automatic transmission comprises:
– an electronic computer,
– a number of brakes and clutches used for gear changes,
– a hydraulic unit with solenoid valves, used for managing the hydraulics to actuate these components.

The solenoid valves are fitted in the factory and cannot be removed from the hydraulic distributor to ensure optimal gearbox operation, therefore they cannot be replaced separately. A computer fitted on the gearbox is used for managing the entire system, defining the operating mode by means of the controls and buttons available to the driver and ensuring smooth operation by means of sensors and signals from other vehicle systems. An inter-system connection allows the computer to establish dialogue with the other computers and the diagnostic tool.

On the instrument panel:
– a fault warning light.
– a message on the instrument panel in case of irregularity.
– an information display: gear lever position / gear engaged / brake pedal depressed indicator light / lever positioning in P or N request indicator light.

On the gear lever:
– Position: P / R / N / D / M+/-,
– Display side mounted indicator on bridge piece, specific to Renault Vel Satis,
– Shift-lock: lever lock.

Gearbox operating mode selection

According to the vehicle speed and the driver's command expressed by the accelerator pedal position, the automatic transmission determines the best moment for the gear change. It corrects any errors by the driver and does not engage a gear that might cause engine overspeed.

Gear change

Taking into account the various input factors, the computer will decide whether to actuate the various solenoid valves to ensure smooth system operation (Gearbox clutches, brakes and hydraulics).
The computer is also involved in:
– the gear change quality,
– monitoring and securing the driveshaft.

Declutching when stationary

This function temporarily disables creeping, when the vehicle is stationary with a gear engaged and the brake pedal has been depressed.

The purpose of this function is to:
- reduce fuel consumption,
- reduce vehicle vibrations,
- reduce vehicle drag to save the hydraulic slave cylinders,
- increase the oil service life.

This function is executed by the gearbox computer, which will temporarily and rapidly dump the pressure of clutch 1. To do so clutch 1 solenoid valve is actuated when all the operating conditions are satisfied (Vehicle stationary, gear engaged and brake pedal depressed).

GETtheMANUALS.org

Pressure regulation

The purpose of this function is to regulate oil pressure in the gearbox.

Release/Lockup

The converter is a hydraulic clutch providing a flexible and automatic connection between the engine and the automatic transmission mechanism: its operation can be broken down into two phases:
- When starting, it multiplies engine torque: CONVERTER FUNCTION.
- At high speed, it transmits the engine torque: COUPLER FUNCTION.

– The converter body is comprised of two half-shells welded together. It is linked to the engine crankshaft by the drive plate. When in operation, it is filled with oil.
– The impeller is integral to the converter body, and thereby the engine.
– The turbine is connected to the automatic transmission mechanism via the turbine shaft.
– The stator is placed between the impeller and the turbine.

The lockup function is to stabilise the turbine and converter body, by transforming a hydraulic connection into a mechanical connection. The role of lockup is to cancel out losses due to slipping*, which improves the performance of vehicles fitted with automatic transmissions.

Torque control

The purpose of this function is to manage the torque setpoints during certain gear shifts by informing the injection computer. This function means smoother gear shifts and better mechanical protection.

Shift-lock

The purpose of this function is to lock the lever in Park position.

Instrument panel display

The purpose of this function is to manage the transmission of multiplex line signals required for the instrument panel display.

*slipping: Slipping indicates the loss of some of the drive power and leads to overconsumption of fuel as well as a reduction in engine braking.

GETtheMANUALS.org

System operating chart in line with gear lever position

Lever positions / Gears engaged		SOLENOID VALVES						HYDRAULIC SLAVE CYLINDERS					FREE WHEEL
		EVM* clutch 1	EVM* clutch 2	EVM* clutch 3	EVM* brake 1	EVS* 1	EVS* 2	CLUTCHES			BRAKES		F1
								1	2	3	1	2	
P		X	X	X	X								
R	V ≤ 4 mph (7 km/h)	X	X		X					X		X	
	V > 4 mph (7 km/h)*	X	X	X	X							X	
N		X	X	X	X								
M +/-	1		X	X	X	X	X	X				X	X
D	1		X	X	X			X					X
D or M +/-	2		X	X				X			X		
	3		X		X			X		X			
	4			X	X			X	X				
	5	X			X				X	X			
	6	X		X					X		X		

V > 4 mph (7 km/h): In this operating mode, it is not possible to select reverse gear in order to protect the automatic transmission.

*EVM: Modulating solenoid valve.

*EVS: Sequence solenoid valve

GETtheMANUALS.org

Connector A (16 track):

Track	Description
1	+ battery feed
2	+ battery feed
3	N + 1 one touch control
4	One-touch multifunction switch, upper contact
5	Not used
6	multiplex line L signal
7	Not used
8	Multiplex line H signal
9	Gearbox computer earth
10	Gearbox computer earth
11	+ After ignition feed
12	Not used
13	Gear lever lock - control
14	Not used
15	Not used
16	Reversing lights + control

GETtheMANUALS.org

Location of gearbox internal connectors and round connector (22 tracks):

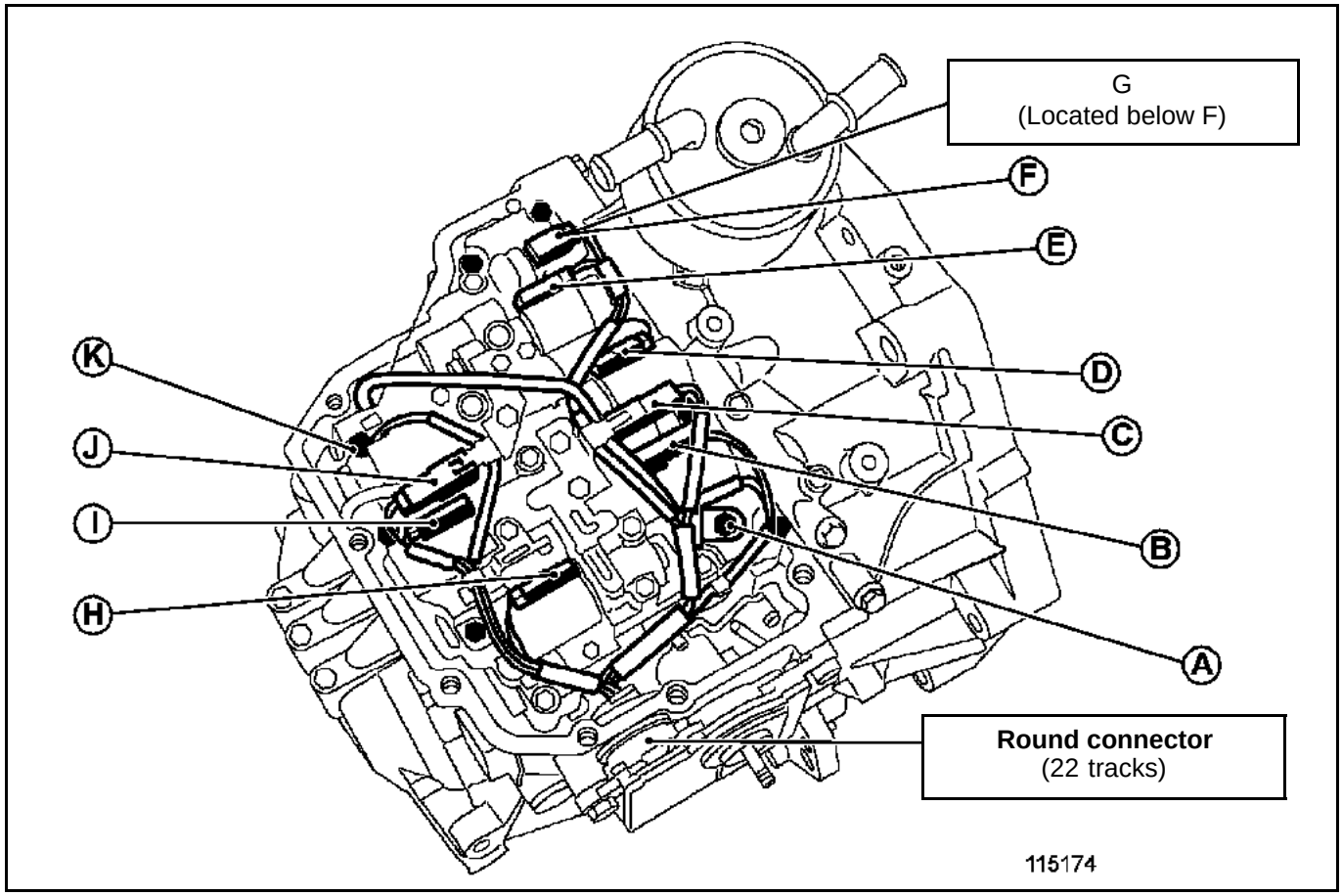

A	Oil temperature sensor
B	Clutch 1 solenoid valve
C	Gearbox output speed sensor
D	Clutch 2 solenoid valve
E	LT pressure regulation solenoid valve
F	Sequence solenoid valve (EVS2)
G	Sequence solenoid valve (EVS1)
H	Converter lockup solenoid valve
I	Clutch 3 solenoid valve
J	Gearbox input speed sensor
K	Brake 1 solenoid valve

GETtheMANUALS.org

Connector B, internal (22 tracks):

Track	Description	Associated component
1	**LT pressure regulation solenoid valve earth** (E)	**LT pressure regulation solenoid valve**
2	**Sequence solenoid valve EVS2 + control** (F)	**Sequence solenoid valve "EVS2"**
3	**LT pressure regulation solenoid valve supply** (E)	**LT pressure regulation solenoid valve**
4	**Converter lockup solenoid valve earth** (H)	**Converter lockup solenoid valve**
5	**Sequence solenoid valve EVS1 + control** (G)	**Sequence solenoid valve "EVS1"**
6	**Not used**	**No PIN**
7	**Oil temperature sensor earth** (A)	**Oil temperature sensor**
8	**Oil temperature sensor + signal** (A)	**Oil temperature sensor**
9	**Converter lockup solenoid valve supply** (H)	**Converter lockup solenoid valve**
10	**Clutch 1 solenoid valve earth** (B)	**Clutch 1 solenoid valve**
11	**Clutch 1 solenoid valve supply** (B)	**Clutch 1 solenoid valve**
12	**Gearbox output speed sensor + signal** (C)	**Gearbox output speed sensor**
13	**Gearbox output speed sensor - signal** (C)	**Gearbox output speed sensor**
14	**Clutch 3 solenoid valve supply** (I)	**Clutch 3 solenoid valve**
15	**Not used**	**No PIN**
16	**Brake 1 solenoid valve earth** (K)	**Brake 1 solenoid valve**
17	**Clutch 2 solenoid valve supply** (D)	**Clutch 2 solenoid valve**
18	**Clutch 2 solenoid valve earth** (D)	**Clutch 2 solenoid valve**
19	**Gearbox input speed sensor + signal** (J)	**Gearbox input speed sensor**
20	**Gearbox input speed sensor - signal** (J)	**Gearbox input speed sensor**
21	**Brake 1 solenoid valve supply** (K)	**Brake 1 solenoid valve**
22	**Clutch 3 solenoid valve earth** (I)	**Clutch 3 solenoid valve**

GETtheMANUALS.org

Replacing the gearbox computer:

Remove the gearbox computer (see **MR 405 Mechanics, 23A, automatic transmission, selection cable adjustment**).

Refit the **gearbox computer** and the gear selector on the computer (see **MR 405 Mechanics, 23A, automatic transmission, selection cable adjustment**).

Line up the mark (arrow) in the axis of the **gear lever position sensor** with the fixed mark (arrow) on the **gearbox computer**.

Carry out the gearbox **neutral position programming**:

Put the lever into **N** position (Neutral). Using the diagnostic tool, restore dialogue with the **gearbox computer**. Run command **VP018 Program neutral position**.
Check that status **ET012 Gear lever position** corresponds with the lever position; if not, reprogram the neutral position.

Run command **VP001 Write VIN**.
Run command **VP009 Write last service operation date**.

GETtheMANUALS.org

SETTINGS

VP001: Write VIN.
This command permits manual entry of the vehicle's VIN into the computer.
Use this command each time the computer is replaced or (re)programmed.

VP009: Write last service operation date
Run this command after replacing or removing and refitting the gearbox computer.
This command is used to enter the date of the last service operation.

VP018: Program neutral position
Run this command after replacing or removing and refitting the gearbox computer.

Programming neutral position:

Put the lever into **N** position (Neutral). Run command **VP018 Program neutral position**.
Check that statuses **ET012 Gear lever position** and **ET013 Gear engaged** correspond with the lever position; if not, reprogram the neutral position.

GETtheMANUALS.org

Tool fault	DTC	Diagnostic tool title	Safe mode	
			MODE 1	MODE 2
DF002	0606	COMPUTER	X (2.DEF, 3.DEF)	-
DF059	C100	INJECTION → ATX CONNECTION (MULTIPLEX LINE SIGNALS)	X	-
DF062	C073	MULTIPLEX LINE FAULT	X	-
DF085	0753	SEQUENCE SOLENOID VALVE CIRCUIT "EVS1"	X	-
DF086	0758	SEQUENCE SOLENOID VALVE CIRCUIT (EVS2)	X	-
DF090	0778	CONVERTER LOCKUP SOLENOID VALVE CIRCUIT	-	-
DF092	0748	LT PRESSURE REGULATION SOLENOID VALVE CIRCUIT	X	-
DF095	1928	SELECTOR LEVER LOCK ELECTROMAGNET CIRCUIT	-	-
DF096	0560	COMPUTER SUPPLY VOLTAGE	X	-
DF097	0740	CONVERTER LOCKUP	-	-
DF105	0901	DECLUTCHING WHEN STATIONARY FUNCTION	X (3.DEF)	-
DF129	C416	ELECTRONIC STABILITY PROGRAM (ESP)	-	-
DF153	0812	REVERSING LIGHTS CONTROL	-	-
DF172	C401	INVALID INJECTION MULTIPLEX SIGNALS	X (1.DEF, 2.DEF, 4.DEF, 5.DEF)	-
DF183	C140	NO UCH MULTIPLEX SIGNAL	-	-
DF185	C121	NO ABS/ESP MULTIPLEX SIGNAL	-	-
DF251	0715	GEARBOX INPUT SPEED	X	-
DF256	0780	ERRATIC GEAR JUMPING	-	-
DF272	2734	BRAKE 1 SOLENOID VALVE CIRCUIT	X	-
DF273	0798	CLUTCH 1 SOLENOID VALVE CIRCUIT	X	-
DF274	2716	CLUTCH 2 SOLENOID VALVE CIRCUIT	X	-
DF275	2725	CLUTCH 3 SOLENOID VALVE CIRCUIT	X	-
DF276	0795	CLUTCH 1 SOLENOID VALVE RETURN CURRENT	X	-
DF277	2713	CLUTCH 2 SOLENOID VALVE RETURN CURRENT	X	-
DF278	2722	CLUTCH 3 SOLENOID VALVE RETURN CURRENT	X	-
DF279	2731	BRAKE 1 SOLENOID VALVE RETURN CURRENT	X	-

GETtheMANUALS.org

Tool fault	DTC	Diagnostic tool title	Safe mode	
			MODE 1	MODE 2
DF280	0745	LT PRESSURE REGULATION EV* RETURN CURRENT	X	-
DF281	0775	CONVERTER LOCKUP EV* RETURN CURRENT	X	-
DF283	0949	NEUTRAL POSITION PROGRAMMING	-	-
DF284	0710	GEARBOX OIL TEMPERATURE	-	-
DF286	0705	LEVER POSITION SENSOR SIGNAL	X	-
DF287	0720	GEARBOX OUTPUT SPEED SIGNAL	X	-
DF288	0915	MANUAL MODE LEVER SWITCH	-	-
DF289	C101	AUTOMATIC TRANSMISSION MULTIPLEX SIGNAL	-	-
DF290	C415	ABS MULTIPLEX SIGNAL	-	-
DF291	0731	GEAR 1 SHIFT	-	X
DF292	0732	GEAR 2 SHIFT	-	X
DF293	0733	GEAR 3 SHIFT	-	X
DF294	0734	GEAR 4 SHIFT	-	X
DF295	0735	GEAR 5 SHIFT	-	X
DF296	0729	GEAR 6 SHIFT	-	X
DF297	0736	REVERSE GEAR SHIFT	-	-
DF298	0786	GEAR SHIFTS	-	-

Safe mode

This mode is adopted by the automatic transmission in the event of an electrical or mechanical/hydraulic fault on the system.

There are two main safe modes when driving:

– **Mode 1** (Electrical fault):
Limited gearbox torque.
When driving in 1st, 2nd, 3rd, 4th, 5th or 6th gear, the gearbox will shift to 3rd, except in the event of a malfunction on clutches 1 or 2, when the gearbox will shift to 5th.

– **Mode 2** (Operating fault):
Torque limited:
– In D: 150 Nm
– In R: 170 Nm

The converter lockup function is disabled.
When driving in 1st, 2nd, 3rd, 4th, 5th or 6th gear, the gearbox will keep the same gear engaged without converter lockup control. If neutral is selected, the gearbox will shift to 5th.

EV*: Solenoid valve

GETtheMANUALS.org

Hydraulic mode:

This mode is applied during an electrical/electronic system fault and when the computer is no longer powered. The operational gears are:
– 3rd,
– N for neutral position
– reverse.

GETtheMANUALS.org

DF002 PRESENT OR STORED	COMPUTER 1.DEF: Fault in EEPROM 2.DEF: RAM memory integrity 3.DEF: Internal electronic fault

NOTES	**Conditions for applying fault finding procedures to stored faults:** The fault is declared present after the vehicle ignition has been switched on.

If the fault appears after reprogramming, switch off the ignition, wait for 1 min, switch on the ignition again and run fault finding on the automatic transmission computer. If the fault appears as stored, clear the fault. End of fault finding.
If the fault recurs as present, contact the Techline.

AFTER REPAIR	Deal with any faults detected by the diagnostic tool. Clear the computer fault memory. Carry out a road test followed by another check with the diagnostic tool.

GETtheMANUALS.org

DF059 PRESENT OR STORED	INJECTION → AUTOMATIC TRANSMISSION CONNECTION (MULTIPLEX LINE SIGNAL) 1.DEF: No computer multiplex signal

NOTES	**Order of priority in the event of more than one fault:** If there is a combination of the following faults: **– DF062 Multiplex line fault,** **– DF172 Invalid injection multiplex signals,** deal with fault **DF062 Multiplex line fault** first.
	Conditions for applying fault finding procedures to stored faults: The fault is declared present after the vehicle ignition has been switched on.
	Use the Visu-Schéma CD for the vehicle.

Carry out a multiplex network test (see **88B, Multiplexing**).

Look for any damage to the harness, check the condition and connection of external connector **A** (16 tracks) of the **gearbox computer** and of the **injection computer** connector.
Manipulate the wiring harness in order to observe any change in the fault status (Present → stored).

Check **the insulation and continuity** of the following connections:

gearbox computer, external connector **A** (16 tracks), **track 6** ⟶ **Track 47 injection computer** connector

gearbox computer, external connector **A** (16 tracks), **track 8** ⟶ **Track 9 injection computer** connector

If the harness or one of the connectors is not in good condition, refer to the wiring repair procedure (see **Technical Note 6015A, Repairing electrical wiring, Wiring: Precautions for repairs**).

If the fault is still present, carry out fault finding on the injection system (see **13B, diesel injection**).

If the fault is still present, contact the Techline.

AFTER REPAIR	Deal with any faults detected by the diagnostic tool. Clear the computer fault memory. Carry out a road test followed by another check with the diagnostic tool.

GETtheMANUALS.org

DF062 PRESENT OR STORED	MULTIPLEX LINE FAULT 1.DEF: No signal

NOTES	**conditions for applying fault finding procedures to stored faults:** the fault is declared present after the vehicle ignition is switched on. **Special notes:** None.

Carry out a multiplex network test (see **88B, Multiplexing**).

Look for any damage to the harness, check the condition and connection of connector **A** (16 tracks) of the **gearbox computer** and of the **injection computer** connector.
Manipulate the wiring harness in order to observe any change in the fault status (Present → stored).

Check **the insulation and continuity** of the following connections:

gearbox computer, external connector **A** (16 tracks), **track 6** ⟶ **Track 47 injection computer** connector

gearbox computer, external connector **A** (16 tracks), **track 8** ⟶ **Track 9 injection computer** connector

If the harness or one of the connectors is not in good condition, refer to the wiring repair procedure (see **Technical Note 6015A, Repairing electrical wiring, Wiring: Precautions for repairs**).

If the fault is still present, carry out fault finding on the injection system (see **13B, diesel injection**).

If the fault is still present, contact the Techline.

AFTER REPAIR	Deal with any faults detected by the diagnostic tool. Clear the computer fault memory. Carry out a road test followed by another check with the diagnostic tool.

GETtheMANUALS.org

DF085 PRESENT OR STORED	SEQUENCE SOLENOID VALVE CIRCUIT ESV1 CO.1 : Open circuit or short circuit to + 12 V CC.0 : Short circuit to earth

NOTES	**Conditions for applying fault finding procedures to stored faults:** The fault appears after: – the computer fault memory has been cleared, – the ignition has been switched off and on again, – starting the engine, – shifting to P, R or N. – If driving conditions permit, select 5th and 6th gears. **OR** Using the diagnostic tool, establish dialogue with the gearbox computer, run command **AC002 Sequence solenoid valve 1**.
	Use the Visu-Schéma CD for the vehicle.

Remove the gearbox computer (see **MR 402 mechanics, 23A, automatic transmission, Selection cable adjustment**).

Measure the resistance of **sequence solenoid valve EVS1** between **track 5** (On round connector, 22 tracks, gearbox internal harness) **and the automatic transmission casing**.
Resistance value: **13 Ω ± 2 Ω** (at 20 °C).

If the resistance is correct

Refit the automatic transmission computer (There is no need to refit the gear selector or program the neutral position) (see **MR 402, mechanics, 23A, automatic transmission**).

Using the diagnostic tool, establish dialogue with the gearbox computer and run command **AC002 Sequence solenoid valve 1**.
Check the faults:
- If **DF085** is stored on the diagnostic tool, go to step A.
- If **DF085** is not present or stored on the diagnostic tool, end of fault finding. Apply the neutral position programming procedure described in part B.

If the resistance is incorrect

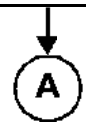

AFTER REPAIR	Deal with any faults detected by the diagnostic tool. Clear the computer fault memory. Carry out a road test followed by another check with the diagnostic tool.

GETtheMANUALS.org

DF085 **CONTINUED**	

A

Drain the gearbox (see **MR 402, mechanics, 23A, automatic transmission, oil change**).
Remove the hydraulic distributor case (see **MR 402, mechanics, 23A, automatic transmission, hydraulic distributor removal - refitting**).

Look for any damage to the harness, check the condition of the round connector (22 tracks), **gearbox** internal harness, and of the **sequence solenoid valve EVS1** connector.

Measure the resistance of the solenoid valve on the component terminal:

Track 1 → solenoid valve body

Resistance value: **13 Ω ± 2 Ω** (at 20 °C).
If the value is not correct: contact the Techline to confirm the solenoid valve fault (replacement of the hydraulic distributor).

If the value is correct, check the harness by applying the following procedure:
Check **the continuity** and **absence of interference resistance** of the following connection:

round connector (22 tracks), **gearbox internal harness, track 5** → **Track 1** sequence solenoid valve EVS1 connector

If the harness or one of the connectors is not in good condition, refer to the wiring repair procedure (see **Technical Note 6015A, Repairing electrical wiring, Wiring: Precautions for repairs**).

If the fault is still present, contact the Techline to confirm the solenoid valve fault (replacement of the hydraulic distributor).

B

Refit the gear selector on the computer (see **MR 402 mechanics, 23A, automatic transmission, Selection cable adjustment**).
Program the gearbox neutral position using command **VP018 Program neutral position**.

AFTER REPAIR	Deal with any faults detected by the diagnostic tool. Clear the computer fault memory. Carry out a road test followed by another check with the diagnostic tool.

GETtheMANUALS.org

DF086 PRESENT OR STORED	SEQUENCE SOLENOID VALVE CIRCUIT EVS2 CO.1 : Open circuit or short circuit to + 12 V CC.0 : Short circuit to earth

NOTES	**Conditions for applying fault finding procedures to stored faults:** The fault appears after: – the computer fault memory has been cleared, – the ignition has been switched off and on again, – starting the engine, – shifting to P, R or N. – If driving conditions permit, select 1st, 2nd, 3rd, and 4th gear. **OR** Using the diagnostic tool, establish dialogue with the gearbox computer, run command **AC003 Sequence solenoid valve 2**.
	Use the Visu-Schéma CD for the vehicle.

Remove the computer (see **MR 402 mechanics, 23A, automatic transmission, Selection cable adjustment**).

Measure the resistance of the **sequence solenoid valve EVS2** between **track 2** (On round connector, 22 tracks, gearbox internal harness) **and the automatic transmission casing**.
Resistance value: **13 Ω ± 2 Ω** (at 20 °C).

If the resistance is correct

Refit the automatic transmission computer (There is no need to refit the gear selector or program the neutral position) (see **MR 402, mechanics, 23A, automatic transmission**).

Using the diagnostic tool, establish dialogue with the gearbox computer and run command **AC003 Sequence solenoid valve 2**.
Check the faults:
- If **DF086** is stored on the diagnostic tool, go to step A.
- If **DF086** is not present or stored on the diagnostic tool, end of fault finding. Apply the neutral position programming procedure described in part B.

If the resistance is incorrect

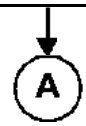

AFTER REPAIR	Deal with any faults detected by the diagnostic tool. Clear the computer fault memory. Carry out a road test followed by another check with the diagnostic tool.

GETtheMANUALS.org

DF086 **CONTINUED**	

A

Drain the gearbox (see **MR 402, mechanics, 23A, automatic transmission, oil change**).
Remove the hydraulic distributor case (see **MR 402, mechanics, 23A, automatic transmission, hydraulic distributor removal - refitting**).

Look for any damage to the harness, check the condition of the round connector (22 tracks), **gearbox** internal harness, and of the **sequence solenoid valve EVS2** connector.

Measure the resistance of the solenoid valve on the component terminal:

Track 1 ⟶ solenoid valve body

Resistance value: **13 Ω ± 2 Ω** (at 20 °C).
If the value is not correct: contact the Techline to confirm the solenoid valve fault (replacement of the hydraulic distributor).

If the value is correct, check the harness by applying the following procedure:
Check **the continuity** and absence of interference resistance of the following connection:

round connector (22 tracks), **gearbox internal harness, track 2** ⟶ **Track 1** sequence solenoid valve EVS2 connector

If the harness or one of the connectors is not in good condition, refer to the wiring repair procedure (see **Technical Note 6015A, Repairing electrical wiring, Wiring: Precautions for repairs**).

If the fault is still present, contact the Techline to confirm the solenoid valve fault (replacement of the hydraulic distributor).

B

Refit the gear selector on the computer (see **MR 402 mechanics, 23A, automatic transmission, Selection cable adjustment**).
Program the gearbox neutral position using command **VP018 Program neutral position**.

AFTER REPAIR	Deal with any faults detected by the diagnostic tool. Clear the computer fault memory. Carry out a road test followed by another check with the diagnostic tool.

GETtheMANUALS.org

DF090 PRESENT OR STORED	CONVERTER LOCKUP SOLENOID VALVE CIRCUIT CC.1 : Short circuit to + 12 V CO.0 : Open circuit or short circuit to earth

NOTES	**Conditions for applying fault finding procedures to stored faults:** The fault appears after: – the computer fault memory has been cleared, – the ignition has been switched off and on again, – engine started and vehicle driven. **OR** run command **AC085 Converter lockup solenoid valve**.
	Use the Visu-Schéma CD for the vehicle.

Remove the computer (see **MR 402 mechanics, 23A, automatic transmission, Selection cable adjustment**).

Measure the resistance of the **lockup solenoid valve** between **tracks 4 and 9** on the round connector (22 tracks), gearbox internal harness.
Resistance value: **5.3 Ω ± 0.3 Ω** (at 20 °C).

If the resistance is correct

Check **the insulation from earth** of the following connections:

round connector (22 tracks) gearbox internal harness, **track 4** → **Earth**

round connector (22 tracks), gearbox internal harness, **track 9** → **Earth**

If insulation is correct → A

If insulation is incorrect → B

If the resistance is incorrect → B

AFTER REPAIR	Deal with any faults detected by the diagnostic tool. Clear the computer fault memory. Carry out a road test followed by another check with the diagnostic tool.

GETtheMANUALS.org

DF090 **CONTINUED 1**	

Refit the automatic transmission computer (There is no need to refit the gear selector or program the neutral position) (see **MR 402, mechanics, 23A, automatic transmission**).

Using the diagnostic tool, establish dialogue with the gearbox computer and run command **AC085 Converter lockup solenoid valve**.
Check the faults:
- If **DF090** is stored on the diagnostic tool, go to step B.
- If **DF090** is not present or stored on the diagnostic tool, end of fault finding. Apply the neutral position programming procedure described in part C.

AFTER REPAIR	Deal with any faults detected by the diagnostic tool. Clear the computer fault memory. Carry out a road test followed by another check with the diagnostic tool.

GETtheMANUALS.org

DF090 **CONTINUED 2**	

B

Drain the gearbox (see **MR 402, mechanics, 23A, automatic transmission, oil change**).
Remove the hydraulic distributor case (see **MR 402, mechanics, 23A, automatic transmission, hydraulic distributor removal - refitting**).

Look for any damage to the harness, check the condition of the round connector (22 tracks), **gearbox internal harness**, and of the **converter lockup solenoid valve** connector.

Measure the resistance of the solenoid valve on the component terminals:

Track 1 ⟶ track 2

Resistance value: **5.3 Ω ± 0.3 Ω** (at 20 °C).
If the value is not correct: contact the Techline to confirm the solenoid valve fault (replacement of the hydraulic distributor).

If the value is correct, check the harness by applying the following procedure:
Check **the continuity and insulation from earth** of the following connections:

round connector (22 tracks) **gearbox internal harness, track 4** ⟶ **Track 1** converter lockup solenoid valve connector

round connector (22 tracks), **gearbox internal harness, track 9** ⟶ **Track 2** converter lockup solenoid valve connector

If the harness or one of the connectors is not in good condition, refer to the wiring repair procedure (see **Technical Note 6015A, Repairing electrical wiring, Wiring: Precautions for repairs**).

If the fault is still present, contact the Techline to confirm the solenoid valve fault (replacement of the hydraulic distributor).

C

Refit the gear selector on the computer (see **MR 402 mechanics, 23A, automatic transmission, Selection cable adjustment**).
Program the gearbox neutral position using command **VP018 Program neutral position**.

AFTER REPAIR	Deal with any faults detected by the diagnostic tool. Clear the computer fault memory. Carry out a road test followed by another check with the diagnostic tool.

GETtheMANUALS.org

DF092 PRESENT OR STORED	LT PRESSURE REGULATION SOLENOID VALVE CIRCUIT CC.1 : Short circuit to + 12 V CO.0 : Open circuit or short circuit to earth

NOTES	**Conditions for applying fault finding procedures to stored faults:** The fault appears after: – the computer fault memory has been cleared, – the ignition has been switched off and on again, – engine started and vehicle driven between 2nd and 6th gear. **OR** run command **AC087 LT pressure regulation solenoid valve**. Use the Visu-Schéma CD for the vehicle.

Remove the computer (see **MR 402 mechanics, 23A, automatic transmission, Selection cable adjustment**).

Measure the resistance of the **LT pressure regulation solenoid valve** between **tracks 1 and 3** on the round connector (22 tracks), gearbox internal harness.
Resistance value: **5.3 Ω ± 0.3 Ω** (at 20 °C).

If the resistance is correct

Check **the insulation from earth** of the following connections:

round connector (22 tracks), gearbox internal harness, **track 1** → **Earth**

round connector (22 tracks) gearbox internal harness, **track 3** → **Earth**

If insulation is correct → A

If insulation is incorrect → B

If the resistance is incorrect → B

AFTER REPAIR	Deal with any faults detected by the diagnostic tool. Clear the computer fault memory. Carry out a road test followed by another check with the diagnostic tool.

GETtheMANUALS.org

DF092 **CONTINUED 1**	

Refit the automatic transmission computer (There is no need to refit the gear selector or program the neutral position) (see **MR 402, mechanics, 23A, automatic transmission, selection cable adjustment**).

Using the diagnostic tool, establish dialogue with the gearbox computer and run command **AC087 LT Pressure regulation solenoid valve**.
Check the faults:
- If **DF092** is stored on the diagnostic tool, go step B.
- If **DF092** is not present or stored on the diagnostic tool, end of fault finding. Apply the neutral position programming procedure described in part C.

AFTER REPAIR	Deal with any faults detected by the diagnostic tool. Clear the computer fault memory. Carry out a road test followed by another check with the diagnostic tool.

GETtheMANUALS.org

DF092 **CONTINUED 2**	

B

Drain the gearbox (see **MR 402, mechanics, 23A, automatic transmission, oil change**).
Remove the hydraulic distributor case (see **MR 402, mechanics, 23A, automatic transmission, hydraulic distributor removal - refitting**).

Look for any damage to the harness, check the condition of the round connector (22 tracks), **gearbox internal harness**, and of the **LT pressure regulation solenoid valve** connector.

Measure the resistance of the solenoid valve on the component terminals:

Track 1 ⟶ track 2

Resistance value: **5.3 Ω ± 0.3 Ω** (at 20 °C).
If the value is not correct: contact the Techline to confirm the solenoid valve fault (replacement of the hydraulic distributor).

If the value is correct, check the harness by applying the following procedure:
Check **the continuity and insulation from earth** of the following connections:

round connector (22 tracks), **gearbox internal harness, track 1** ⟶ **Track 1** converter lockup solenoid valve connector

round connector (22 tracks) **gearbox internal harness, track 3** ⟶ **Track 2** converter lockup solenoid valve connector

If the harness or one of the connectors is not in good condition, refer to the wiring repair procedure (see **Technical Note 6015A, Repairing electrical wiring, Wiring: Precautions for repairs**).

If the fault is still present, contact the Techline to confirm the solenoid valve fault (replacement of the hydraulic distributor).

C

Refit the gear selector on the computer (see **MR 402 mechanics, 23A, automatic transmission, Selection cable adjustment**).
Program the gearbox neutral position using command **VP018 Program neutral position**.

AFTER REPAIR	Deal with any faults detected by the diagnostic tool. Clear the computer fault memory. Carry out a road test followed by another check with the diagnostic tool.

GETtheMANUALS.org

DF095 PRESENT OR STORED	SELECTOR LEVER LOCK ELECTROMAGNET CIRCUIT CC.1 : Short circuit to + 12 V CO.0 : Open circuit or short circuit to earth

NOTES	**Conditions for applying fault finding procedures to stored faults:** The fault appears after: – the computer fault memory has been cleared, – the ignition has been switched off and on again, – engine started and left running for **30 seconds** in P position.
	Special notes: Make sure that status **ET037 Brake switch signal** is consistent, if there is a fault, consult the interpretation of status **ET037**. Make sure that status **ET074 Lever lock control** is consistent, if there is a fault, consult the interpretation of status **ET037**.
	Use the Visu-Schéma CD for the vehicle.

Measure the **resistance** of the winding of the lever locking electromagnet between **tracks B1 and B2** of the gear lever connector. If the resistance measured is not **37 Ω ± 2 Ω at 20 °C**, replace the faulty component.

Look for any damage to the harness, check the condition and connection of connector **A** (16 tracks), of the **gearbox computer** connector and of the gear lever connector.
Manipulate the wiring harness in order to observe any change in the fault status (Present → stored).

Check the **insulation and continuity** of the following connection:

external connector **gearbox computer, track 13** ⟶ **Track B2** gear lever connector

If the harness or one of the connectors is not in good condition, refer to the wiring repair procedure (see **Technical Note 6015, Repairing electrical wiring, Wiring: Precautions for repairs**).

If the fault is still present, replace the faulty component.

If the fault is still present, contact the Techline.

AFTER REPAIR	Deal with any faults detected by the diagnostic tool. Clear the computer fault memory. Carry out a road test followed by another check with the diagnostic tool.

GETtheMANUALS.org

DF096 PRESENT OR STORED	COMPUTER SUPPLY VOLTAGE 1.DEF: Signal outside lower limit 2.DEF: Signal outside upper limit

NOTES	**Conditions for applying fault finding procedures to stored faults:** The fault is declared present after the vehicle ignition has been switched on.
	Use the Visu-Schéma CD for the vehicle.

Look for any damage to the harness, check the condition and connection of external connector **A** (16 tracks) of the **gearbox computer** and of the **relay/fuse box** connector.
Manipulate the wiring harness in order to observe any change in the fault status (Present → stored).

Check for fuses **FM1 (15 A)** and **FM4 (5 A)**, and their condition.

Check for **+ after ignition feed** on **tracks 1** and **2** of the **gearbox computer**.

Check for **earth** on **tracks 9** and **10** of the **gearbox computer**.

Check **the insulation and continuity** of the following connections:

external connector **gearbox computer, track 1** ⟶ **Track 25** relay/fuse box connector

external connector **gearbox computer, track 2** ⟶ **Track 25** relay/fuse box connector

external connector **gearbox computer, track 11** ⟶ **Track 30** relay/fuse box connector

If the harness or one of the connectors is not in good condition, refer to the wiring repair procedure (see **Technical Note 6015A, Repairing electrical wiring, Wiring: Precautions for repairs**).

If the fault is still present, contact the Techline.

AFTER REPAIR	Deal with any faults detected by the diagnostic tool. Clear the computer fault memory. Carry out a road test followed by another check with the diagnostic tool.

GETtheMANUALS.org

DF097 PRESENT OR STORED	CONVERTER LOCKUP 1.DEF: Parameter at maximum limit 2.DEF: Parameter at minimum limit

NOTES	**Order of priority in the event of more than one fault:** If there is a combination of the following faults: **– DF090 Converter lockup solenoid valve circuit,** **– DF281 Converter lockup solenoid valve return current.** Deal with fault **DF090 Converter lockup solenoid valve circuit** first.
	Conditions for applying fault finding procedures to stored faults: The fault is declared present after a road test, with gear selector in position D and gearbox oil temperature above 25 °C.
	Use the Visu-Schéma CD for the vehicle.

Check the gearbox oil condition and level.

Check the line pressure:
Line pressure check:
Position D:
– The engine oil temperature, **PR004 Gearbox oil temperature** must be between 50 °C and 80 °C inclusive before performing the test.
– Put the line pressure tap plug in position D (see **Test 1: Measuring the line pressure**).
– Insert a pressure gauge in place of the plug.
– Put blocks under the vehicle wheels.
– Start the vehicle.
– Connect the diagnostic tool.
– Establish dialogue with the automatic transmission computer.
– Check parameter **PR110 LT pressure regulation solenoid valve current**.
– Depress the brake pedal to stop the vehicle rolling forward.
– Put the gear selector in position D.

With the engine idling, the pressure gauge reading should be between 3.7 bar and 4.3 bar.
The reading of **PR110 LT pressure regulation solenoid valve current** should be 1000 mA ± 10 mA.

Accelerate gently to reach an engine speed of 2000 rpm for 5 seconds.
The pressure gauge reading should be above the reading when idling, 3.7 bar.
The reading of **PR110 LT pressure regulation solenoid valve current** should be less than 1000 mA.

AFTER REPAIR	Deal with any faults detected by the diagnostic tool. Clear the computer fault memory. Carry out a road test followed by another check with the diagnostic tool.

GETtheMANUALS.org

DF097 **CONTINUED**	

Carry out a setting point check:

Setting point check:
– The engine oil temperature, **PR004 Gearbox oil temperature** must be between 50 °C and 80 °C inclusive before performing the test.
– Put blocks under the vehicle wheels.
– Start the vehicle.
– Connect the diagnostic tool.
– Establish dialogue with the automatic transmission computer.
– Keep the brake pedal depressed to stop the vehicle rolling forward.
– Put the gear selector in position R.

Check parameter **PR006 Engine speed**.
Accelerate until you reach setting point.

The engine speed value at the setting point should be between **2130 rpm and 2430 rpm** inclusive.

Recommendation: This test should not last over 5 seconds, and must not be repeated several times in succession, as this could damage the automatic transmission hydraulic system.

Analysis:
If the engine speed value is not reached, check that the engine is operating correctly.

If the fault is still present, contact the Techline to confirm the automatic transmission fault.

AFTER REPAIR	Deal with any faults detected by the diagnostic tool. Clear the computer fault memory. Carry out a road test followed by another check with the diagnostic tool.

GETtheMANUALS.org

DF105 PRESENT OR STORED	DECLUTCHING WHEN STATIONARY FUNCTION 1.DEF: Clutch 1 engaged 2.DEF: Clutch 1 disengaged 3.DEF: Engine racing

NOTES	**Order of priority in the event of more than one fault:** If there is a combination of the following faults: **– DF273 Clutch 1 solenoid valve circuit,** **– DF276 Clutch 1 return circuit,** deal with fault **DF273 Clutch 1 solenoid valve circuit** first.
	Conditions for applying fault finding procedures to stored faults: The fault appears after: – clearing the computer fault memory, – the ignition has been switched off and on again, – engine started and left running for **30 seconds** in position D with the brake depressed. **OR** Using the diagnostic tool, establish dialogue with the gearbox computer, run command **AC026 Clutch 1 solenoid valve**.

1.DEF ***2.DEF***	***NOTES***	None

Check the gearbox oil condition and level.
Check parameters **PR006 Engine speed** and **PR014 Gearbox input speed**.

3.DEF	***NOTES***	None

Check the gearbox oil condition and level.
Check parameters **PR006 Engine speed** and **PR014 Gearbox input speed**.

Line pressure fault or mechanical fault.

AFTER REPAIR	Deal with any faults detected by the diagnostic tool. Clear the computer fault memory. Carry out a road test followed by another check with the diagnostic tool.

GETtheMANUALS.org

DF129 PRESENT OR STORED	ELECTRONIC STABILITY PROGRAM ESP 1DEF : Multiplex signals from generating computer invalid

NOTES	**Order of priority in the event of more than one fault:** If there is a combination of the following faults: **– DF062 Multiplex line fault,** **– DF185 No ABS/ESP multiplex signals,** **– DF290 ABS multiplex signal,** deal with fault **DF062 Multiplex line fault** first.
	Conditions for applying fault finding procedures to stored faults: The fault is declared present after a road test.

Carry out a multiplex network test (see **88B, Multiplexing**).

Run fault finding on the ABS system (see **38C, Anti-lock braking system**).

If the fault is still present, contact the Techline.

AFTER REPAIR	Deal with any faults detected by the diagnostic tool. Clear the computer fault memory. Carry out a road test followed by another check with the diagnostic tool.

GETtheMANUALS.org

DF153 PRESENT OR STORED	REVERSING LIGHTS CONTROL CO.1 : Open circuit or short circuit to + 12 V CC.0 : Short circuit to earth

NOTES	**Conditions for applying fault finding procedures to stored faults:** Using the diagnostic tool, establish dialogue with the gearbox computer, run command **AC094 Reversing lights**.
	Use the Visu-Schéma CD for the vehicle.

Carry out a multiplex network test (see **88B, Multiplexing**).

Look for any damage to the harness, check the condition and connection of external connector **A** (16 tracks) of the **gearbox computer** and of the **reversing lights relay** connector.
Manipulate the wiring harness in order to observe any change in the fault status (Present → stored).

Check the **insulation and continuity** of the following connection:

external connector **gearbox computer, track 16** ⟶ **Track 47** reversing light relay

If the harness or one of the connectors is not in good condition, refer to the wiring repair procedure (see **Technical Note 6015A, Repairing electrical wiring, Wiring: Precautions for repairs**).

If the fault is still present, contact the Techline.

AFTER REPAIR	Deal with any faults detected by the diagnostic tool. Clear the computer fault memory. Carry out a road test followed by another check with the diagnostic tool.

GETtheMANUALS.org

DF172 PRESENT OR STORED	INVALID INJECTION MULTIPLEX SIGNALS 1.DEF: Fault with average actual torque signal 2.DEF: Fault with engine torque signal outside reduction from ATX 3.DEF: Coolant temperature multiplex signal 4.DEF: Engine speed signal inconsistent 5.DEF: Accelerator pedal position signal

NOTES	**Order of priority in the event of more than one fault:** In the event of a combination of faults, deal with fault **DF062 Multiplex line fault** first.
	Conditions for applying fault finding procedures to stored faults: The fault is declared present after a road test.

Carry out a multiplex network test (see **88B, Multiplexing**).

Run fault finding on the injection system (see **13B diesel injection**).

If the fault is still present, contact the Techline.

AFTER REPAIR	Deal with any faults detected by the diagnostic tool. Clear the computer fault memory. Carry out a road test followed by another check with the diagnostic tool.

GETtheMANUALS.org

DF183 PRESENT OR STORED	NO UCH MULTIPLEX SIGNAL 1.DEF: No computer multiplex signal

NOTES	**Order of priority in the event of more than one fault:** In the event of a combination of faults, deal with fault **DF062 Multiplex line fault** first.
	Conditions for applying fault finding procedures to stored faults: The fault is declared after 1 min with the engine running.

Carry out a multiplex network test (see **88B, Multiplexing**).

Run fault finding on the passenger compartment connection unit (see **87B passenger compartment connection unit**).

If the fault is still present, contact the Techline.

AFTER REPAIR	Deal with any faults detected by the diagnostic tool. Clear the computer fault memory. Carry out a road test followed by another check with the diagnostic tool.

GETtheMANUALS.org

DF185 PRESENT OR STORED	NO ABS/ESP MULTIPLEX SIGNAL 1.DEF: No computer multiplex signal

NOTES	**Order of priority in the event of more than one fault:** If there is a combination of the following faults: **– DF062 Multiplex line fault,** **– DF129 Electronic Stability Program (ESP),** **– DF290 ABS multiplex signal,** deal with fault **DF062 Multiplex line fault** first.
	Conditions for applying fault finding procedures to stored faults: The fault appears after: – The computer fault memory has been cleared, – the ignition has been switched off and on again, – road test.

Carry out a multiplex network test (see **88B, Multiplexing**).

Run fault finding on the ABS system (see **38C, Anti-lock braking system**).

If the fault is still present, contact the Techline.

AFTER REPAIR	Deal with any faults detected by the diagnostic tool. Clear the computer fault memory. Carry out a road test followed by another check with the diagnostic tool.

GETtheMANUALS.org

DF251 PRESENT OR STORED	GEARBOX INPUT SPEED 1.DEF: No signal 2.DEF: Values outside the limits

NOTES	**Conditions for applying fault finding procedures to stored faults:** The fault appears after: – the computer fault memory has been cleared, – the ignition has been switched off and on again, – engine started and left running for **1 min**.
	Use the Visu-Schéma CD for the vehicle.

Remove the computer (see **MR 402 mechanics, 23A, automatic transmission, Selection cable adjustment**).

Check **the insulation** of the following connections:

round connector (22 tracks), gearbox internal harness, **track 19** → **Earth**

round connector (22 tracks), gearbox internal harness, **track 20** → **Earth**

Check **the continuity** of the following connections:

round connector (22 tracks), gearbox internal harness, **track 19** → **Track 2** gearbox input speed sensor connector

round connector (22 tracks), gearbox internal harness, **track 20** → **Track 1** gearbox input speed sensor connector

If the harness or one of the connectors is not in good condition, refer to the wiring repair procedure (see **Technical Note 6015A, Repairing electrical wiring, Wiring: Precautions for repairs**).

If the fault is still present, contact the Techline to confirm the sensor fault (replacement of the automatic transmission).

If the insulation check and continuity check are correct, refit the automatic transmission computer and the gear selector (see **MR 402, Mechanics, 23A, Automatic transmission**).
Program the gearbox neutral position using command **VP018 Program neutral position**.
Carry out a road test.

Check the faults:
If **DF251** is stored in the diagnostic tool, contact the Techline to confirm the sensor fault (replacement of the automatic transmission).
If **DF251** is not present or stored on the diagnostic tool, end of fault finding.

AFTER REPAIR	Deal with any faults detected by the diagnostic tool. Clear the computer fault memory. Carry out a road test followed by another check with the diagnostic tool.

GETtheMANUALS.org

DF256 PRESENT OR STORED	ERRATIC GEAR JUMPING 1.DEF: Signal incoherence

NOTES	**Conditions for applying fault finding procedures to stored faults:** The fault appears after: – the computer fault memory has been cleared, – the ignition has been switched off and on again, – road test.

Carry out a multiplex network test (see **88B, Multiplexing**).
Make sure that the neutral position programming has been done (see **configurations and programming, VP018 Program neutral position**).
If the fault is still present, contact the Techline to confirm the automatic transmission fault.

AFTER REPAIR	Deal with any faults detected by the diagnostic tool. Clear the computer fault memory. Carry out a road test followed by another check with the diagnostic tool.

GETtheMANUALS.org

DF272 PRESENT OR STORED	BRAKE 1 SOLENOID VALVE CIRCUIT CC.1 : Short circuit to + 12 V CO.0 : Open circuit or short circuit to earth

NOTES	**Conditions for applying fault finding procedures to stored faults:** – the computer fault memory has been cleared, – the ignition has been switched off and on again, – starting the engine, – shifting to P or R or N. – If driving conditions permit, select 1st, 3rd, 4th, 5th gear. **OR** Run command **AC031 Brake 1 solenoid valve**. Use the Visu-Schéma CD for the vehicle.

Remove the computer (see **MR 402 mechanics, 23A, automatic transmission, Selection cable adjustment**).

Measure the resistance of **brake 1 solenoid valve** between **tracks 16 and 21** on the round connector (22 tracks), gearbox internal harness.
Resistance value: **5.3 Ω ± 0.3 Ω** (at 20 °C).

If the resistance is correct

If the resistance is incorrect

Check **the insulation from earth** of the following connections:

round connector (22 tracks), gearbox internal harness, **track 16** → **Earth**

round connector (22 tracks), gearbox internal harness, **track 21** → **Earth**

If insulation is correct

If insulation is incorrect

A

B

AFTER REPAIR	Deal with any faults detected by the diagnostic tool. Clear the computer fault memory. Carry out a road test followed by another check with the diagnostic tool.

GETtheMANUALS.org

DF272 **CONTINUED 1**	

Refit the automatic transmission computer (There is no need to refit the gear selector or program the neutral position) (see **MR 402, mechanics, 23A, automatic transmission, selection cable adjustment**).

Using the diagnostic tool, establish dialogue with the gearbox computer and run command **AC031 Brake 1 solenoid valve**.
Check the faults:
If **DF272** is stored on the diagnostic tool, go step B.
If **DF272** is not present or stored on the diagnostic tool, end of fault finding. Apply the neutral position programming procedure described in part C.

AFTER REPAIR	Deal with any faults detected by the diagnostic tool. Clear the computer fault memory. Carry out a road test followed by another check with the diagnostic tool.

GETtheMANUALS.org

DF272 **CONTINUED 2**	

B

Drain the gearbox (see **MR 402, mechanics, 23A, automatic transmission, oil change**).
Remove the hydraulic distributor case (see **MR 402, mechanics, 23A, automatic transmission, hydraulic distributor removal - refitting**).

Look for any damage to the harness, check the condition of the round connector (22 tracks), **gearbox** internal harness and of the **brake 1 solenoid valve** connector.

Measure the resistance of the solenoid valve on the component terminals:

Track 1 ⟶ track 2

Resistance value: **5.3 Ω ± 0.3 Ω** (at 20 °C).
If the value is not correct: contact the Techline to confirm the solenoid valve fault (replacement of the hydraulic distributor).

If the value is correct, check the harness by applying the following procedure:
Check **the continuity and insulation from earth** of the following connections:

round connector (22 tracks), **gearbox internal harness, track 16** ⟶ **Track 1 brake 1** solenoid valve connector

round connector (22 tracks), **gearbox internal harness, track 21** ⟶ **Track 2 brake 1** solenoid valve connector

If the harness or one of the connectors is not in good condition, refer to the wiring repair procedure (see **Technical Note 6015A, Repairing electrical wiring, Wiring: Precautions for repairs**).

If the fault is still present, contact the Techline to confirm the solenoid valve or automatic transmission internal wiring fault (replacement of the hydraulic distributor).

C

Refit the gear selector on the computer (see **MR 402 mechanics, 23A, automatic transmission, Selection cable adjustment**).
Program the gearbox neutral position using command **VP018 Program neutral position**.

AFTER REPAIR	Deal with any faults detected by the diagnostic tool. Clear the computer fault memory. Carry out a road test followed by another check with the diagnostic tool.

GETtheMANUALS.org

DF273 PRESENT OR STORED	CLUTCH 1 SOLENOID VALVE CIRCUIT CC.1 : Short circuit to + 12 V CO.0 : Open circuit or short circuit to earth

NOTES	**Order of priority in the event of more than one fault:** If there is a combination of faults, deal with fault **DF273 Clutch 1 solenoid valve circuit**.
	Conditions for applying fault finding procedures to stored faults: – the computer fault memory has been cleared, – the ignition has been switched off and on again, – starting the engine, – shifting to P or R or N. – If driving conditions permit, select 5th, 6th gear. **OR** Run command **AC026 Clutch 1 solenoid valve**.
	Use the Visu-Schéma CD for the vehicle.

Remove the computer (see **MR 402 mechanics, 23A, automatic transmission, Selection cable adjustment**).

Measure the resistance of **clutch 1 solenoid valve** between **tracks 10 and 11** on the round connector (22 tracks), gearbox internal harness.
Resistance value: **5.3 Ω ± 0.3 Ω** (at 20 °C).

If the resistance is correct

If the resistance is incorrect

Check **the insulation from earth** of the following connections:

round connector (22 tracks), gearbox internal harness, **track 10** → **Earth**

round connector (22 tracks), gearbox internal harness, **track 11** → **Earth**

If insulation is correct

If insulation is incorrect

A

B

AFTER REPAIR	Deal with any faults detected by the diagnostic tool. Clear the computer fault memory. Carry out a road test followed by another check with the diagnostic tool.

GETtheMANUALS.org

DF273 **CONTINUED 1**	

Refit the automatic transmission computer (There is no need to refit the gear selector or program the neutral position) (see **MR 402, mechanics, 23A, automatic transmission, selection cable adjustment**).

Using the diagnostic tool, establish dialogue with the gearbox computer and run command **AC026 Clutch 1 solenoid valve**.
Check the faults:
If **DF273** is stored on the diagnostic tool, go step B.
If **DF273** is not present or stored on the diagnostic tool, end of fault finding. Apply the neutral position programming procedure described in part C.

AFTER REPAIR	Deal with any faults detected by the diagnostic tool. Clear the computer fault memory. Carry out a road test followed by another check with the diagnostic tool.

GETtheMANUALS.org

DF273 **CONTINUED 2**	

B

Drain the gearbox (see **MR 402, mechanics, 23A, automatic transmission, oil change**).
Remove the hydraulic distributor case (see **MR 402, mechanics, 23A, automatic transmission, hydraulic distributor removal - refitting**).

Look for any damage to the harness, check the condition of the round connector (22 tracks), **gearbox internal harness** and of the **clutch 1 solenoid valve** connector.

Measure the resistance of the solenoid valve on the component terminals:

Track 1 ⟶ track 2

Resistance value: **5.3 Ω ± 0.3 Ω** (at 20 °C).
If the value is not correct: contact the Techline to confirm the solenoid valve fault (replacement of the hydraulic distributor).

If the value is correct, check the harness by applying the following procedure:
Check **the continuity and insulation from earth** of the following connections:

round connector (22 tracks), **gearbox internal harness, track 10** ⟶ **Track 1 clutch 1** solenoid valve connector

round connector (22 tracks), **gearbox internal harness, track 11** ⟶ **Track 2 clutch 1** solenoid valve connector

If the harness or one of the connectors is not in good condition, refer to the wiring repair procedure (see **Technical Note 6015A, Repairing electrical wiring, Wiring: Precautions for repairs**).

If the fault is still present, contact the Techline to confirm the solenoid valve or automatic transmission internal wiring fault (replacement of the hydraulic distributor).

C

Refit the gear selector on the computer (see **MR 402 mechanics, 23A, automatic transmission, Selection cable adjustment**).
Program the gearbox neutral position using command **VP018 Program neutral position**.

AFTER REPAIR	Deal with any faults detected by the diagnostic tool. Clear the computer fault memory. Carry out a road test followed by another check with the diagnostic tool.

GETtheMANUALS.org

DF274 PRESENT OR STORED	CLUTCH 2 SOLENOID VALVE CIRCUIT CC.1 : Short circuit to + 12 V CO.0 : Open circuit or short circuit to earth

NOTES	**Order of priority in the event of more than one fault:** If there is a combination of faults, deal with fault **DF274 Clutch 2 solenoid valve circuit**.
	Conditions for applying fault finding procedures to stored faults: – the computer fault memory has been cleared, – the ignition has been switched off and on again, – starting the engine, – shifting to P or R or N. – If driving conditions permit, select 1st, 2nd, 3rd gear. **OR** Run command **AC029 Clutch 2 solenoid valve**.
	Use the Visu-Schéma CD for the vehicle.

Remove the computer (see **MR 402 mechanics, 23A, automatic transmission, Selection cable adjustment**).

Measure the resistance of **clutch 2 solenoid valve** between **tracks 17 and 18** on the round connector (22 tracks), gearbox internal harness.
Resistance value: **5.3 Ω ± 0.3 Ω** (at 20 °C).

If the resistance is correct

Check **the insulation from earth** of the following connections:

round connector (22 tracks), gearbox internal harness, **track 17** → **Earth**

round connector (22 tracks), gearbox internal harness, **track 18** → **Earth**

If insulation is correct → A

If insulation is incorrect → B

If the resistance is incorrect → B

AFTER REPAIR	Deal with any faults detected by the diagnostic tool. Clear the computer fault memory. Carry out a road test followed by another check with the diagnostic tool.

GETtheMANUALS.org

DF274 **CONTINUED 1**	

Refit the automatic transmission computer (There is no need to refit the gear selector or program the neutral position) (see **MR 402, mechanics, 23A, automatic transmission, selection cable adjustment**).

Using the diagnostic tool, establish dialogue with the gearbox computer and run command **AC029 Clutch 2 solenoid valve**.
Check the faults:
If **DF274** is stored on the diagnostic tool, go step B.
If **DF274** is not present or stored on the diagnostic tool, end of fault finding. Apply the neutral position programming procedure described in part C.

AFTER REPAIR	Deal with any faults detected by the diagnostic tool. Clear the computer fault memory. Carry out a road test followed by another check with the diagnostic tool.

GETtheMANUALS.org

DF274 **CONTINUED 2**	

B

Drain the gearbox (see **MR 402, mechanics, 23A, automatic transmission, oil change**).
Remove the hydraulic distributor case (see **MR 402, mechanics, 23A, automatic transmission, hydraulic distributor removal - refitting**).

Look for any damage to the harness, check the condition of the round connector (22 tracks), **gearbox internal harness**, and of the **clutch 2 solenoid valve** connector.

Measure the resistance of the solenoid valve on the component terminals:

Track 1 ⟶ track 2

Resistance value: **5.3 Ω ± 0.3 Ω** (at 20 °C).
If the value is not correct: contact the Techline to confirm the solenoid valve fault (replacement of the hydraulic distributor).

If the value is correct, check the harness by applying the following procedure:
Check **the continuity and insulation from earth** of the following connections:

round connector (22 tracks), **gearbox internal harness, track 17** ⟶ **Track 2** clutch 2 solenoid valve connector

round connector (22 tracks), **gearbox internal harness, track 18** ⟶ **Track 1** clutch 2 solenoid valve connector

If the harness or one of the connectors is not in good condition, refer to the wiring repair procedure (see **Technical Note 6015A, Repairing electrical wiring, Wiring: Precautions for repairs**).

If the fault is still present, contact the Techline to confirm the solenoid valve or automatic transmission internal wiring fault (replacement of the hydraulic distributor).

C

Refit the gear selector on the computer (see **MR 402 mechanics, 23A, automatic transmission, Selection cable adjustment**).
Program the gearbox neutral position using command **VP018 Program neutral position**.

AFTER REPAIR	Deal with any faults detected by the diagnostic tool. Clear the computer fault memory. Carry out a road test followed by another check with the diagnostic tool.

GETtheMANUALS.org

DF275 PRESENT OR STORED	CLUTCH 3 SOLENOID VALVE CIRCUIT CC.1 : Short circuit to + 12 V CO.0 : Open circuit or short circuit to earth

NOTES	**Order of priority in the event of more than one fault:** If there is a combination of faults, deal with fault **DF275 Clutch 3 solenoid valve circuit**.
	Conditions for applying fault finding procedures to stored faults: – the computer fault memory has been cleared, – the ignition has been switched off and on again, – starting the engine, – shifting to P or N. – If driving conditions permit, select 1st, 2nd, 4th, 6th gear **OR** Run command **AC030 Clutch 3 solenoid valve**.
	Use the Visu-Schéma CD for the vehicle.

Remove the computer (see **MR 402 mechanics, 23A, automatic transmission, Selection cable adjustment**).

Measure the resistance of **clutch 3 solenoid valve** between **tracks 14 and 22** on the round connector (22 tracks), gearbox internal harness.
Resistance value: **5.3 Ω ± 0.3 Ω** (at 20 °C).

If the resistance is correct

If the resistance is incorrect

Check **the insulation from earth** of the following connections:

round connector (22 tracks), gearbox internal harness, **track 14** → **Earth**

round connector (22 tracks), gearbox internal harness, **track 22** → **Earth**

If insulation is correct

If insulation is incorrect

A

B

AFTER REPAIR	Deal with any faults detected by the diagnostic tool. Clear the computer fault memory. Carry out a road test followed by another check with the diagnostic tool.

GETtheMANUALS.org

DF275 **CONTINUED 1**	

Refit the automatic transmission computer (There is no need to refit the gear selector or program the neutral position) (see **MR 402, mechanics, 23A, automatic transmission, selection cable adjustment**).

Using the diagnostic tool, establish dialogue with the gearbox computer and run command **AC030 Clutch 3 solenoid valve**.
Check the faults:
If **DF275** is stored on the diagnostic tool, go step B.
If **DF275** is not present or stored on the diagnostic tool, end of fault finding. Apply the neutral position programming procedure described in part C.

AFTER REPAIR	Deal with any faults detected by the diagnostic tool. Clear the computer fault memory. Carry out a road test followed by another check with the diagnostic tool.

GETtheMANUALS.org

DF275 **CONTINUED 2**	

B

Drain the gearbox (see **MR 402, mechanics, 23A, automatic transmission, oil change**).
Remove the hydraulic distributor case (see **MR 402, mechanics, 23A, automatic transmission, hydraulic distributor removal - refitting**).

Look for any damage to the harness, check the condition of the round connector (22 tracks), **gearbox** internal harness, and of the **clutch 3 solenoid valve** connector.

Measure the resistance of the solenoid valve on the component terminals:

Track 1 ⟶ track 2

Resistance value: **5.3 Ω ± 0.3 Ω** (at 20 °C).
If the value is not correct: contact the Techline to confirm the solenoid valve fault (replacement of the hydraulic distributor).

If the value is correct, check the harness by applying the following procedure:
Check **the continuity and insulation from earth** of the following connections:

round connector (22 tracks), **gearbox internal harness, track 14** ⟶ **Track 2** clutch 3 solenoid valve connector

round connector (22 tracks), **gearbox internal harness, track 22** ⟶ **Track 1** clutch 3 solenoid valve connector

If the harness or one of the connectors is not in good condition, refer to the wiring repair procedure (see **Technical Note 6015A, Repairing electrical wiring, Wiring: Precautions for repairs**).

If the fault is still present, contact the Techline to confirm the solenoid valve or automatic transmission internal wiring fault (replacement of the hydraulic distributor).

C

Refit the gear selector on the computer (see **MR 402 mechanics, 23A, automatic transmission, Selection cable adjustment**).
Program the gearbox neutral position using command **VP018 Program neutral position**.

AFTER REPAIR	Deal with any faults detected by the diagnostic tool. Clear the computer fault memory. Carry out a road test followed by another check with the diagnostic tool.

GETtheMANUALS.org

DF276 PRESENT OR STORED	CLUTCH 1 SOLENOID VALVE RETURN CURRENT 1.DEF: Signal outside upper limit

NOTES	**Order of priority in the event of more than one fault:** If there is a combination of the following faults: **– DF273 Clutch 1 solenoid valve circuit,** deal with fault **DF273** first.
	Conditions for applying fault finding procedures to stored faults: – the computer fault memory has been cleared, – the ignition has been switched off and on again, – starting the engine, – shifting to P or R or N. – If driving conditions permit, select 5th, 6th gear **OR** Run command **AC026 Clutch 1 solenoid valve**.
	Use the Visu-Schéma CD for the vehicle.

Remove the computer (see **MR 402 mechanics, 23A, automatic transmission, Selection cable adjustment**).

Measure the resistance of **clutch 1 solenoid valve** between **tracks 10 and 11** on the round connector (22 tracks), gearbox internal harness.
Resistance value: **5.3 Ω ± 0.3 Ω** (at 20 °C).

If the resistance is correct

If the resistance is incorrect

Check **the insulation from earth** of the following connections:

round connector (22 tracks), gearbox internal harness, **track 10** → **Earth**

round connector (22 tracks), gearbox internal harness, **track 11** → **Earth**

If insulation is correct

If insulation is incorrect

A

B

AFTER REPAIR	Deal with any faults detected by the diagnostic tool. Clear the computer fault memory. Carry out a road test followed by another check with the diagnostic tool.

GETtheMANUALS.org

DF276 **CONTINUED 1**	

Refit the automatic transmission computer (There is no need to refit the gear selector or program the neutral position) (see **MR 402, mechanics, 23A, automatic transmission, selection cable adjustment**).

Using the diagnostic tool, establish dialogue with the gearbox computer and run command **AC026 Clutch 1 solenoid valve**.
Check the faults:
If **DF276** is stored on the diagnostic tool, go step B.
If **DF276** is not present or stored on the diagnostic tool, end of fault finding. Apply the neutral position programming procedure described in part C.

AFTER REPAIR	Deal with any faults detected by the diagnostic tool. Clear the computer fault memory. Carry out a road test followed by another check with the diagnostic tool.

GETtheMANUALS.org

DF276 **CONTINUED 2**	

B

Drain the gearbox (see **MR 402, mechanics, 23A, automatic transmission, oil change**).
Remove the hydraulic distributor case (see **MR 402, mechanics, 23A, automatic transmission, hydraulic distributor removal - refitting**).

Look for any damage to the harness, check the condition of the round connector (22 tracks), **gearbox** internal harness, and of the **clutch 1 solenoid valve** connector.

Measure the resistance of the solenoid valve on the component terminals:

Track 1 ⟶ track 2

Resistance value: **5.3 Ω ± 0.3 Ω** (at 20 °C).
If the value is not correct: contact the Techline to confirm the solenoid valve fault (replacement of the hydraulic distributor).

If the value is correct, check the harness by applying the following procedure:
Check **the continuity and insulation from earth** of the following connections:

round connector (22 tracks), **gearbox internal harness, track 10** ⟶ **Track 1 clutch 1** solenoid valve connector

round connector (22 tracks), **gearbox internal harness, track 11** ⟶ **Track 2 clutch 1** solenoid valve connector

If the harness or one of the connectors is not in good condition, refer to the wiring repair procedure (see **Technical Note 6015A, Repairing electrical wiring, Wiring: Precautions for repairs**).

If the fault is still present, contact the Techline to confirm the solenoid valve or automatic transmission internal wiring fault (replacement of the hydraulic distributor).

C

Refit the gear selector on the computer (see **MR 402 mechanics, 23A, automatic transmission, Selection cable adjustment**).
Program the gearbox neutral position using command **VP018 Program neutral position**.

AFTER REPAIR	Deal with any faults detected by the diagnostic tool. Clear the computer fault memory. Carry out a road test followed by another check with the diagnostic tool.

GETtheMANUALS.org

DF277 PRESENT OR STORED	CLUTCH 2 SOLENOID VALVE RETURN CURRENT 1.DEF: Signal outside upper limit

NOTES	**Order of priority in the event of more than one fault:** If there is a combination of the following faults: **– DF274 Clutch 2 solenoid valve circuit,** **– DF277 Clutch 2 solenoid valve return current,** deal with fault **DF274** first.
	Conditions for applying fault finding procedures to stored faults: – the computer fault memory has been cleared, – the ignition has been switched off and on again, – starting the engine, – shifting to P or R or N. – If driving conditions permit, select 1st, 2nd, 3rd gear. **OR** Run command **AC029 Clutch 2 solenoid valve**.
	Use the Visu-Schéma CD for the vehicle.

Remove the computer (see **MR 402 mechanics, 23A, automatic transmission, Selection cable adjustment**).

Measure the resistance of **clutch 2 solenoid valve** between **tracks 17 and 18** on the round connector (22 tracks), gearbox internal harness.
Resistance value: **5.3 Ω ± 0.3 Ω** (at 20 °C).

If the resistance is correct

If the resistance is incorrect

Check **the insulation from earth** of the following connections:

round connector (22 tracks), gearbox internal harness, **track 17** → **Earth**

round connector (22 tracks), gearbox internal harness, **track 18** → **Earth**

If insulation is correct

If insulation is incorrect

A

B

AFTER REPAIR	Deal with any faults detected by the diagnostic tool. Clear the computer fault memory. Carry out a road test followed by another check with the diagnostic tool.

GETtheMANUALS.org

DF277 **CONTINUED 1**	

Refit the automatic transmission computer (There is no need to refit the gear selector or program the neutral position) (see **MR 402, mechanics, 23A, automatic transmission, selection cable adjustment**).

Using the diagnostic tool, establish dialogue with the gearbox computer and run command **AC029 Clutch 2 solenoid valve**.
Check the faults:
If **DF277** is stored on the diagnostic tool, go step B.
If **DF277** is not present or stored on the diagnostic tool, end of fault finding. Apply the neutral position programming procedure described in part C.

AFTER REPAIR	Deal with any faults detected by the diagnostic tool. Clear the computer fault memory. Carry out a road test followed by another check with the diagnostic tool.

GETtheMANUALS.org

DF277 **CONTINUED 2**	

B

Drain the gearbox (see **MR 402, mechanics, 23A, automatic transmission, oil change**).
Remove the hydraulic distributor case (see **MR 402, mechanics, 23A, automatic transmission, hydraulic distributor removal - refitting**).

Look for any damage to the harness, check the condition of the round connector (22 tracks), **gearbox internal harness**, and of the **clutch 2 solenoid valve** connector.

Measure the resistance of the solenoid valve on the component terminals:

Track 1 → track 2

Resistance value: **5.3 Ω ± 0.3 Ω** (at 20 °C).
If the value is not correct: contact the Techline to confirm the solenoid valve fault (replacement of the hydraulic distributor).

If the value is correct, check the harness by applying the following procedure:
Check **the continuity and insulation from earth** of the following connections:

round connector (22 tracks), **gearbox internal harness, track 17** → **Track 2** clutch 2 solenoid valve connector

round connector (22 tracks), **gearbox internal harness, track 18** → **Track 1** clutch 2 solenoid valve connector

If the harness or one of the connectors is not in good condition, refer to the wiring repair procedure (see **Technical Note 6015A, Repairing electrical wiring, Wiring: Precautions for repairs**).

If the fault is still present, contact the Techline to confirm the solenoid valve or automatic transmission internal wiring fault (replacement of the hydraulic distributor).

C

Refit the gear selector on the computer (see **MR 402 mechanics, 23A, automatic transmission, Selection cable adjustment**).
Program the gearbox neutral position using command **VP018 Program neutral position**.

AFTER REPAIR	Deal with any faults detected by the diagnostic tool. Clear the computer fault memory. Carry out a road test followed by another check with the diagnostic tool.

GETtheMANUALS.org

DF278 PRESENT OR STORED	CLUTCH 3 SOLENOID VALVE RETURN CURRENT 1.DEF: Signal outside upper limit

NOTES	**Order of priority in the event of more than one fault:** If there is a combination of the following faults: **– DF275 Clutch 3 solenoid valve circuit,** **– DF278 Clutch 3 solenoid valve return current,** deal with fault **DF275** first.
	Conditions for applying fault finding procedures to stored faults: – the computer fault memory has been cleared, – the ignition has been switched off and on again, – starting the engine, – shifting to P or N. – If driving conditions permit, select 1st, 2nd, 4th, 6th gear **OR** Run command **AC030 Clutch 3 solenoid valve**.
	Use the Visu-Schéma CD for the vehicle.

Remove the computer (see **MR 402 mechanics, 23A, automatic transmission, Selection cable adjustment**).

Measure the resistance of **clutch 3 solenoid valve** between **tracks 14 and 22** on the round connector (22 tracks), gearbox internal harness.
Resistance value: **5.3 Ω ± 0.3 Ω** (at 20 °C).

If the resistance is correct

If the resistance is incorrect

Check **the insulation from earth** of the following connections:

round connector (22 tracks), gearbox internal harness, **track 14** → **Earth**

round connector (22 tracks), gearbox internal harness, **track 22** → **Earth**

If insulation is correct

If insulation is incorrect

A

B

AFTER REPAIR	Deal with any faults detected by the diagnostic tool. Clear the computer fault memory. Carry out a road test followed by another check with the diagnostic tool.

GETtheMANUALS.org

DF278 **CONTINUED 1**	

Refit the automatic transmission computer (There is no need to refit the gear selector or program the neutral position) (see **MR 402, mechanics, 23A, automatic transmission, selection cable adjustment**).

Using the diagnostic tool, establish dialogue with the gearbox computer and run command **AC030 Clutch 3 solenoid valve**.
Check the faults:
If **DF278** is stored on the diagnostic tool, go step B.
If **DF278** is not present or stored on the diagnostic tool, end of fault finding. Apply the neutral position programming procedure described in part C.

AFTER REPAIR	Deal with any faults detected by the diagnostic tool. Clear the computer fault memory. Carry out a road test followed by another check with the diagnostic tool.

GETtheMANUALS.org

DF278 **CONTINUED 2**	

B

Drain the gearbox (see **MR 402, mechanics, 23A, automatic transmission, oil change**).
Remove the hydraulic distributor case (see **MR 402, mechanics, 23A, automatic transmission, hydraulic distributor removal - refitting**).

Look for any damage to the harness, check the condition of the round connector (22 tracks), **gearbox** internal harness, and of the **clutch 3 solenoid valve** connector.

Measure the resistance of the solenoid valve on the component terminals:

Track 1 ⟶ track 2

Resistance value: **5.3 Ω ± 0.3 Ω** (at 20 °C).
If the value is not correct: contact the Techline to confirm the solenoid valve fault (replacement of the hydraulic distributor).

If the value is correct, check the harness by applying the following procedure:
Check **the continuity and insulation from earth** of the following connections:

round connector (22 tracks), **gearbox internal harness, track 14** ⟶ **Track 2** clutch 3 solenoid valve connector

round connector (22 tracks), **gearbox internal harness, track 22** ⟶ **Track 1** clutch 3 solenoid valve connector

If the harness or one of the connectors is not in good condition, refer to the wiring repair procedure (see **Technical Note 6015A, Repairing electrical wiring, Wiring: Precautions for repairs**).

If the fault is still present, contact the Techline to confirm the solenoid valve or automatic transmission internal wiring fault (replacement of the hydraulic distributor).

C

Refit the gear selector on the computer (see **MR 402 mechanics, 23A, automatic transmission, Selection cable adjustment**).
Program the gearbox neutral position using command **VP018 Program neutral position**.

AFTER REPAIR	Deal with any faults detected by the diagnostic tool. Clear the computer fault memory. Carry out a road test followed by another check with the diagnostic tool.

GETtheMANUALS.org

DF279 PRESENT OR STORED	BRAKE 1 SOLENOID VALVE RETURN CURRENT 1.DEF: Signal outside upper limit

NOTES	**Order of priority in the event of more than one fault:** If there is a combination of the following faults: **– DF272 Brake 1 solenoid valve circuit,** **– DF279 Brake 1 solenoid valve return current** deal with fault **DF272** first.
	Conditions for applying fault finding procedures to stored faults: – the computer fault memory has been cleared, – the ignition has been switched off and on again, – starting the engine, – shifting to P or R or N. – If driving conditions permit, select 1st, 3rd, 4th, 5th gear **OR** Run command **AC031 Brake 1 solenoid valve**.
	Use the Visu-Schéma CD for the vehicle.

Remove the computer (see **MR 402 mechanics, 23A, automatic transmission, Selection cable adjustment**).

Measure the resistance of **brake 1 solenoid valve** between **tracks 16 and 21** on the round connector (22 tracks), gearbox internal harness.
Resistance value: **5.3 Ω ± 0.3 Ω** (at 20 °C).

If the resistance is correct

If the resistance is incorrect

Check **the insulation from earth** of the following connections:

round connector (22 tracks), gearbox internal harness, **track 16** → **Earth**

round connector (22 tracks), gearbox internal harness, **track 21** → **Earth**

If insulation is correct

If insulation is incorrect

A

B

AFTER REPAIR	Deal with any faults detected by the diagnostic tool. Clear the computer fault memory. Carry out a road test followed by another check with the diagnostic tool.

GETtheMANUALS.org

DF279 **CONTINUED 1**	

Refit the automatic transmission computer (There is no need to refit the gear selector or program the neutral position) (see **MR 402, mechanics, 23A, automatic transmission, selection cable adjustment**).

Using the diagnostic tool, establish dialogue with the gearbox computer and run command **AC031 Brake 1 solenoid valve**.
Check the faults:
If **DF279** is stored on the diagnostic tool, go step B.
If **DF279** is not present or stored on the diagnostic tool, end of fault finding. Apply the neutral position programming procedure described in part C.

AFTER REPAIR	Deal with any faults detected by the diagnostic tool. Clear the computer fault memory. Carry out a road test followed by another check with the diagnostic tool.

GETtheMANUALS.org

DF279 **CONTINUED 2**	

B

Drain the gearbox (see **MR 402, mechanics, 23A, automatic transmission, oil change**).
Remove the hydraulic distributor case (see **MR 402, mechanics, 23A, automatic transmission, hydraulic distributor removal - refitting**).

Look for any damage to the harness, check the condition of the round connector (22 tracks), **gearbox** internal harness and of the **brake 1 solenoid valve** connector.

Measure the resistance of the solenoid valve on the component terminals:

Track 1 ⟶ track 2

Resistance value: **5.3 Ω ± 0.3 Ω** (at 20 °C).
If the value is not correct: contact the Techline to confirm the solenoid valve fault (replacement of the hydraulic distributor).

If the value is correct, check the harness by applying the following procedure:
Check **the continuity and insulation from earth** of the following connections:

round connector (22 tracks), **gearbox internal harness, track 16** ⟶ **Track 1 brake 1** solenoid valve connector

round connector (22 tracks), **gearbox internal harness, track 21** ⟶ **Track 2 brake 1** solenoid valve connector

If the harness or one of the connectors is not in good condition, refer to the wiring repair procedure (see **Technical Note 6015A, Repairing electrical wiring, Wiring: Precautions for repairs**).

If the fault is still present, contact the Techline to confirm the solenoid valve or automatic transmission internal wiring fault (replacement of the hydraulic distributor).

C

Refit the gear selector on the computer (see **MR 402 mechanics, 23A, automatic transmission, Selection cable adjustment**).
Program the gearbox neutral position using command **VP018 Program neutral position**.

AFTER REPAIR	Deal with any faults detected by the diagnostic tool. Clear the computer fault memory. Carry out a road test followed by another check with the diagnostic tool.

GETtheMANUALS.org

DF280 PRESENT OR STORED	LT PRESSURE REGULATION SOLENOID VALVE RETURN CURRENT 1.DEF: Signal outside upper limit

NOTES	**Order of priority in the event of more than one fault:** If there is a combination of faults, deal with fault **DF092 LT pressure regulation solenoid valve circuit** first.
	Conditions for applying fault finding procedures to stored faults: – the computer fault memory has been cleared, – the ignition has been switched off and on again, – engine started and vehicle driven between 2nd and 6th gear. **OR** Run command **AC087 LT pressure regulation solenoid valve**.
	Use the Visu-Schéma CD for the vehicle.

Remove the computer (see **MR 402 mechanics, 23A, automatic transmission, Selection cable adjustment**).

Measure the resistance of the **LT pressure regulation solenoid valve** between **tracks 1 and 3** on the round connector (22 tracks), gearbox internal harness.
Resistance value: **5.3 Ω ± 0.3 Ω** (at 20 °C).

If the resistance is correct

If the resistance is incorrect

Check **the insulation from earth** of the following connections:

round connector (22 tracks), gearbox internal harness, **track 1** → **Earth**

round connector (22 tracks) gearbox internal harness, **track 3** → **Earth**

If insulation is correct → A

If insulation is incorrect → B

AFTER REPAIR	Deal with any faults detected by the diagnostic tool. Clear the computer fault memory. Carry out a road test followed by another check with the diagnostic tool.

GETtheMANUALS.org

DF280 **CONTINUED 1**	

Refit the automatic transmission computer (There is no need to refit the gear selector or program the neutral position) (see **MR 402, mechanics, 23A, automatic transmission, selection cable adjustment**).

Using the diagnostic tool, establish dialogue with the gearbox computer and run command **AC087 LT Pressure regulation solenoid valve**.
Check the faults:
If **DF280** is stored on the diagnostic tool, go step B.
If **DF280** is not present or stored on the diagnostic tool, end of fault finding. Apply the neutral position programming procedure described in part C.

AFTER REPAIR	Deal with any faults detected by the diagnostic tool. Clear the computer fault memory. Carry out a road test followed by another check with the diagnostic tool.

GETtheMANUALS.org

DF280 **CONTINUED 2**	

B

Drain the gearbox (see **MR 402, mechanics, 23A, automatic transmission, oil change**).
Remove the hydraulic distributor case (see **MR 402, mechanics, 23A, automatic transmission, hydraulic distributor removal - refitting**).

Look for any damage to the harness, check the condition of the round connector (22 tracks), **gearbox internal harness**, and of the **LT pressure regulation solenoid valve** connector.

Measure the resistance of the solenoid valve on the component terminals:

Track 1 → track 2

Resistance value: **5.3 Ω ± 0.3 Ω** (at 20 °C).
If the value is not correct: contact the Techline to confirm the solenoid valve fault (replacement of the hydraulic distributor).

If the value is correct, check the harness by applying the following procedure:
Check **the continuity and insulation from earth** of the following connections:

round connector (22 tracks), **gearbox internal harness, track 1** → **Track 1** converter lockup solenoid valve connector

round connector (22 tracks) **gearbox internal harness, track 3** → **Track 2** converter lockup solenoid valve connector

If the harness or one of the connectors is not in good condition, refer to the wiring repair procedure (see **Technical Note 6015A, Repairing electrical wiring, Wiring: Precautions for repairs**).

If the fault is still present, contact the Techline to confirm the solenoid valve or automatic transmission internal wiring fault (replacement of the hydraulic distributor).

C

Refit the gear selector on the computer (see **MR 402 mechanics, 23A, automatic transmission, Selection cable adjustment**).
Program the gearbox neutral position using command **VP018 Program neutral position**.

AFTER REPAIR	Deal with any faults detected by the diagnostic tool. Clear the computer fault memory. Carry out a road test followed by another check with the diagnostic tool.

GETtheMANUALS.org

DF281 PRESENT OR STORED	CONVERTER LOCKUP SOLENOID VALVE RETURN CURRENT 1.DEF: Signal outside upper limit

NOTES	**Order of priority in the event of more than one fault:** If there is a combination of faults, deal with fault **DF090 Converter lockup solenoid valve circuit** first.
	Conditions for applying fault finding procedures to stored faults: Run command **AC085 Converter lockup solenoid valve**.
	Use the Visu-Schéma CD for the vehicle.

Remove the computer (see **MR 402 mechanics, 23A, automatic transmission, Selection cable adjustment**).

Measure the resistance of the **lockup solenoid valve** between **tracks 4 and 9** on the round connector (22 tracks), gearbox internal harness.
Resistance value: **5.3 Ω ± 0.3 Ω** (at 20 °C).

If the resistance is correct

If the resistance is incorrect

Check **the insulation from earth** of the following connections:

round connector (22 tracks) gearbox internal harness, **track 4** → **Earth**

round connector (22 tracks), gearbox internal harness, **track 9** → **Earth**

If insulation is correct

If insulation is incorrect

A

B

AFTER REPAIR	Deal with any faults detected by the diagnostic tool. Clear the computer fault memory. Carry out a road test followed by another check with the diagnostic tool.

GETtheMANUALS.org

DF281 **CONTINUED 1**	

Refit the automatic transmission computer (There is no need to refit the gear selector or program the neutral position) (see **MR 402, mechanics, 23A, automatic transmission, selection cable adjustment**).

Using the diagnostic tool, establish dialogue with the gearbox computer and run command **AC085 Converter lockup solenoid valve**.
Check the faults:
If **DF281** is stored on the diagnostic tool, go step B.
If **DF281** is not present or stored on the diagnostic tool, end of fault finding. Apply the neutral position programming procedure described in part C.

AFTER REPAIR	Deal with any faults detected by the diagnostic tool. Clear the computer fault memory. Carry out a road test followed by another check with the diagnostic tool.

GETtheMANUALS.org

DF281 **CONTINUED 2**	

B

Drain the gearbox (see **MR 402, mechanics, 23A, automatic transmission, oil change**).
Remove the hydraulic distributor case (see **MR 402, mechanics, 23A, automatic transmission, hydraulic distributor removal - refitting**).

Look for any damage to the harness, check the condition of the round connector (22 tracks), **gearbox** internal harness, and of the **converter lockup solenoid valve** connector.

Measure the resistance of the solenoid valve on the component terminals:

Track 1 → track 2

Resistance value: **5.3 Ω ± 0.3 Ω** (at 20 °C).
If the value is not correct: contact the Techline to confirm the solenoid valve fault (replacement of the hydraulic distributor).

If the value is correct, check the harness by applying the following procedure:
Check **the continuity and insulation from earth** of the following connections:

round connector (22 tracks) **gearbox internal harness, track 4** → **Track 1** converter lockup solenoid valve connector

round connector (22 tracks), **gearbox internal harness, track 9** → **Track 2** converter lockup solenoid valve connector

If the harness or one of the connectors is not in good condition, refer to the wiring repair procedure (see **Technical Note 6015A, Repairing electrical wiring, Wiring: Precautions for repairs**).

If the fault is still present, contact the Techline to confirm the solenoid valve or automatic transmission internal wiring fault (replacement of the hydraulic distributor).

C

Refit the gear selector on the computer (see **MR 402 mechanics, 23A, automatic transmission, Selection cable adjustment**).
Program the gearbox neutral position using command **VP018 Program neutral position**.

AFTER REPAIR	Deal with any faults detected by the diagnostic tool. Clear the computer fault memory. Carry out a road test followed by another check with the diagnostic tool.

GETtheMANUALS.org

DF283 PRESENT OR STORED	NEUTRAL POSITION PROGRAMMING 1.DEF: Programming not carried out or incorrect

NOTES	**Conditions for applying fault finding procedures to stored faults:** The fault appears as present after replacing or reprogramming the gearbox computer or when changing gear.

Put the lever into position N (Neutral).
Make sure that statuses **ET012 Gear lever position** and **ET0013 Gear engaged** correspond to the selector lever position. If not, program the neutral position (see **configurations and programming, VP018 Program neutral position**).

If the fault is still present, contact the Techline.

AFTER REPAIR	Deal with any faults detected by the diagnostic tool. Clear the computer fault memory. Carry out a road test followed by another check with the diagnostic tool.

GETtheMANUALS.org

DF284 PRESENT OR STORED	GEARBOX OIL TEMPERATURE 1.DEF: Signal outside lower limit 2.DEF: Signal outside upper limit CC.0 : Short circuit to earth CO.1 : Open circuit or short circuit to + 12 V

NOTES	**Conditions for applying fault finding procedures to stored faults:** The fault appears after: – the computer fault memory has been cleared, – the ignition has been switched off and on again, – engine started and vehicle driven for **15 minutes**.
	Special notes: The **gearbox oil temperature sensor** is built into the gearbox internal wiring harness.
	Use the Visu-Schéma CD for the vehicle.

1.DEF	***NOTES***	**Conditions for applying fault finding procedures to stored faults:** – Vehicle speed > 24 mph (40 km/h) and oil T° < 20 °C.

Check parameter **PR004 Gearbox oil temperature** when cold and warm.

2.DEF	***NOTES***	**Conditions for applying fault finding procedures to stored faults:** – Oil temp. > 150 °C, for 10 seconds, – Oil T° warning light illuminated on instrument panel.

Check parameter **PR004 Gearbox oil temperature** when cold and warm.

Check status **ET010 Oil temperature too hot**.

AFTER REPAIR	Deal with any faults detected by the diagnostic tool. Clear the computer fault memory. Carry out a road test followed by another check with the diagnostic tool.

GETtheMANUALS.org

DF284 **CONTINUED 1**	

Check the gearbox oil level (see **MR 402 mechanics, 23A, automatic transmission, oil service, fill-up**).

If the level is not correct

Adjust the gearbox oil level.

Carry out a road test.

If the fault is still present

If the fault is no longer present

End of fault finding procedure.

If the level is correct

A

AFTER REPAIR	Deal with any faults detected by the diagnostic tool. Clear the computer fault memory. Carry out a road test followed by another check with the diagnostic tool.

GETtheMANUALS.org

DF284 **CONTINUED 2**	

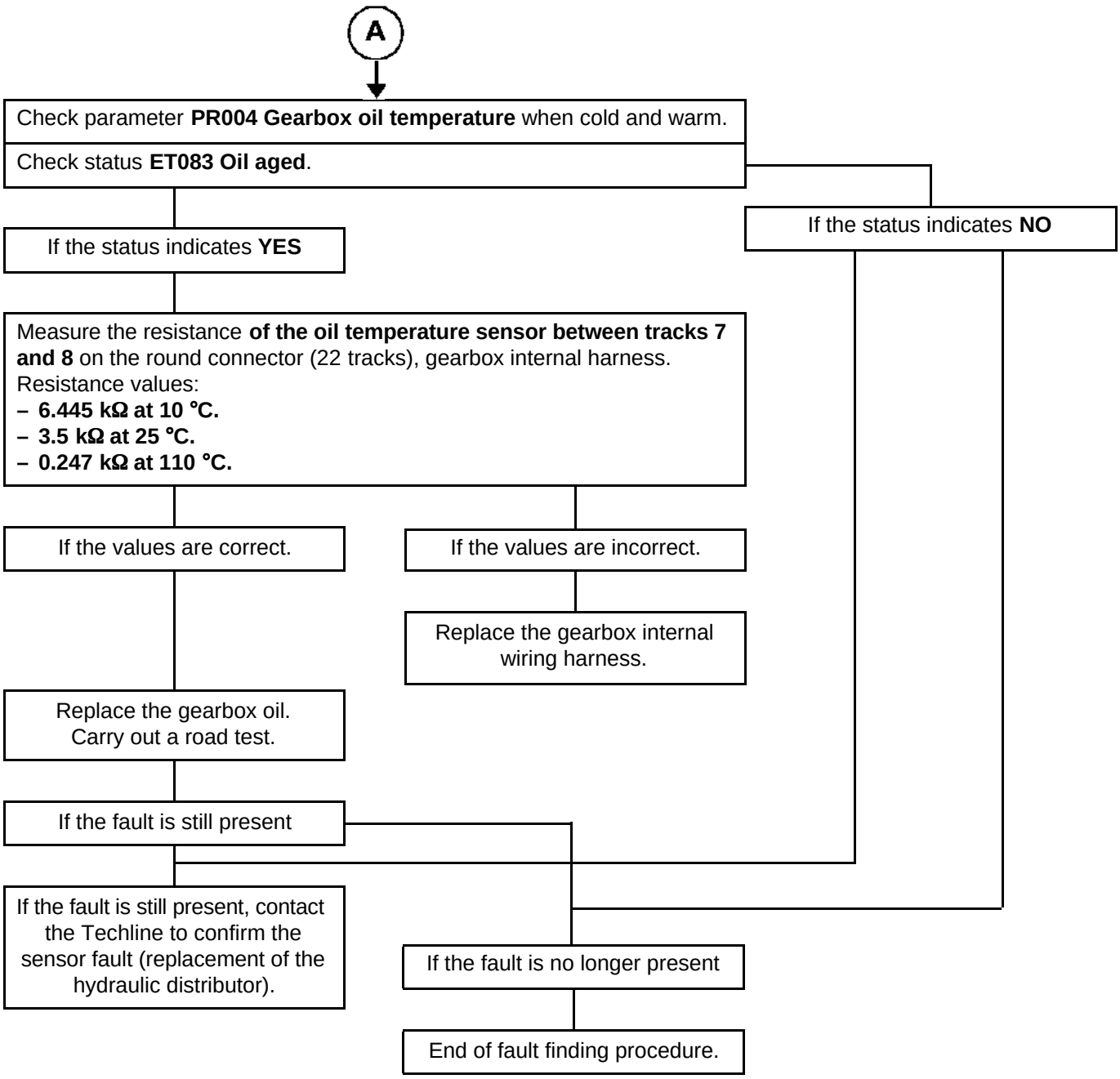

AFTER REPAIR	Deal with any faults detected by the diagnostic tool. Clear the computer fault memory. Carry out a road test followed by another check with the diagnostic tool.

GETtheMANUALS.org

DF284 **CONTINUED 3**	

CC.0 ***CO.1***	***NOTES***	The **80 °C** value given by **PR004** is a safety value, and not representative of the sensor signal when the fault is present.

Measure the resistance of the **gearbox oil temperature sensor** between **tracks 7 and 8** of the internal connector (22 tracks) of the gearbox computer harness.

Remove the computer (see **MR 402 mechanics, 23A, automatic transmission, Selection cable adjustment**).

Measure the resistance **of the oil temperature sensor** between **tracks 7 and 8** on the round connector (22 tracks), gearbox internal harness.
Resistance values:
- **6.445 kΩ at 10 °C**
- **3.5 kΩ at 25 °C**
- **0.247 kΩ at 110 °C**

If the resistance is correct

If the resistance is incorrect

Check **the insulation from earth** of the following connections:

round connector (22 tracks), gearbox internal harness, **track 7** → **Earth**

round connector (22 tracks), gearbox internal harness, **track 8** → **Earth**

If insulation is correct

If insulation is incorrect

A

B

AFTER REPAIR	Deal with any faults detected by the diagnostic tool. Clear the computer fault memory. Carry out a road test followed by another check with the diagnostic tool.

GETtheMANUALS.org

DF284 **CONTINUED 4**	

Check the faults:
If **DF284** is stored on the diagnostic tool, go step B.
If **DF284** is not present or stored on the diagnostic tool, end of fault finding. Apply the neutral position programming procedure described in part C.

Drain the gearbox (see **MR 402, mechanics, 23A, automatic transmission, oil change**).
Remove the hydraulic distributor case (see **MR 402, mechanics, 23A, automatic transmission, hydraulic distributor removal - refitting**).

If the fault is not confirmed, look for any damage to the harness and check the condition of the **gearbox** internal wiring harness round connector (22-track).

Contact the Techline to confirm the sensor or automatic transmission internal wiring fault (replacement of the hydraulic distributor).

Refit the gear selector on the computer (see **MR 402 mechanics, 23A, automatic transmission, Selection cable adjustment**).
Program the gearbox neutral position using command **VP018 Program neutral position**.

AFTER REPAIR	Deal with any faults detected by the diagnostic tool. Clear the computer fault memory. Carry out a road test followed by another check with the diagnostic tool.

GETtheMANUALS.org

DF286 PRESENT OR STORED	LEVER POSITION SENSOR SIGNAL 1.DEF: No signal 2.DEF: Signal outside upper limit 3.DEF: Internal electronic fault

NOTES	**Conditions for applying fault finding procedures to stored faults:** The fault appears after: – the computer fault memory has been cleared, – the ignition has been switched off and on again, – selector lever movement.
	Special notes: The lever position sensor is built into the computer. This sensor cannot be checked electrically.

1.DEF ***2.DEF***	***NOTES***	None

Check that the gear lever position corresponds to the position indicated on the tool, using status **ET012 Gear lever position**.
Check the condition of the cable and mountings connecting the lever to the gearbox. Replace if necessary.
If the fault is still present, contact the Techline.

3.DEF	***NOTES***	None

Contact the Techline.

AFTER REPAIR	Deal with any faults detected by the diagnostic tool. Clear the computer fault memory. Carry out a road test followed by another check with the diagnostic tool.

GETtheMANUALS.org

DF287 PRESENT OR STORED	GEARBOX OUTPUT SPEED SIGNAL 1.DEF: Values outside the limits 2.DEF: No signal

NOTES	**Conditions for applying fault finding procedures to stored faults:** The fault appears after: – the computer fault memory has been cleared, – the ignition has been switched off and on again, – engine started and left running for **3 minutes**. **Special notes:** The **gearbox output speed sensor** cannot be removed. Use the Visu-Schéma CD for the vehicle concerned.

Remove the computer (see **MR 402 mechanics, 23A, automatic transmission, Selection cable adjustment**).

Measure the resistance of the **gearbox output sensor** between **tracks 12 and 13** on the round connector (22 tracks), gearbox internal harness.
Resistance values: **- 5 MΩ**.

If the resistance is correct

If the resistance is incorrect

Check **the insulation from earth** of the following connections:

round connector (22 tracks), gearbox internal harness, **track 12** → **Earth**

round connector (22 tracks), gearbox internal harness, **track 13** → **Earth**

If insulation is correct

If insulation is incorrect

A

B

AFTER REPAIR	Deal with any faults detected by the diagnostic tool. Clear the computer fault memory. Carry out a road test followed by another check with the diagnostic tool.

GETtheMANUALS.org

DF287 **CONTINUED**	

A

Check the faults:
If **DF287** is stored on the diagnostic tool, go to step B.
If **DF287** is not present or stored on the diagnostic tool, end of fault finding. Apply the neutral position programming procedure described in part C.

B

Drain the gearbox (see **MR 402, mechanics, 23A, automatic transmission, oil change**).
Remove the hydraulic distributor case (see **MR 402, mechanics, 23A, automatic transmission, hydraulic distributor removal - refitting**).

If the fault is not confirmed, look for any damage to the harness and check the condition of the **gearbox** internal wiring harness round connector (22-track).

Contact the Techline to confirm the sensor or automatic transmission internal wiring fault (replacement of the hydraulic distributor).

C

Refit the gear selector on the computer (see **MR 402 mechanics, 23A, automatic transmission, Selection cable adjustment**).
Program the gearbox neutral position using command **VP018 Program neutral position**.

AFTER REPAIR	Deal with any faults detected by the diagnostic tool. Clear the computer fault memory. Carry out a road test followed by another check with the diagnostic tool.

GETtheMANUALS.org

DF288 PRESENT OR STORED	MANUAL MODE LEVER SWITCH 1.DEF: Signal incoherence

NOTES	**Conditions for applying fault finding procedures to stored faults:** The fault appears after: – the computer fault memory has been cleared, – the ignition has been switched off and on again, – selector lever movement in manual position.
	None.

Check that the gear lever position corresponds to the position indicated on the tool, using status **ET012 Gear lever position**, putting the lever into manual position M+/-.

Check **the continuity and insulation from earth** of the following connections:

gearbox computer, external connector **A** (16 tracks), **track 3** → **Track A3** selector lever connector

gearbox computer, external connector **A** (16 tracks), **track 4** → **Track B3** selector lever connector

If the harness or one of the connectors is not in good condition, refer to the wiring repair procedure (see **Technical Note 6015A, Repairing electrical wiring, Wiring: Precautions for repairs**).

If the fault is still present, contact the Techline.

AFTER REPAIR	Deal with any faults detected by the diagnostic tool. Clear the computer fault memory. Carry out a road test followed by another check with the diagnostic tool.

GETtheMANUALS.org

DF289 PRESENT OR STORED	AUTOMATIC TRANSMISSION MULTIPLEX SIGNAL 1.DEF: No computer multiplex signal

NOTES	**Order of priority in the event of more than one fault:** In the event of a combination of faults, deal with fault **DF062 Multiplex line fault** first.
	Conditions for applying fault finding procedures to stored faults: The fault appears as present after the vehicle ignition has been on for 1 min.

Carry out a multiplex network test (see **88B, Multiplexing**).

If the fault is still present, contact the Techline.

AFTER REPAIR	Deal with any faults detected by the diagnostic tool. Clear the computer fault memory. Carry out a road test followed by another check with the diagnostic tool.

GETtheMANUALS.org

DF290 PRESENT OR STORED	ABS SIGNAL 1.DEF : Vehicle speed multiplex signal inconsistency 2.DEF : Rear left-hand wheel speed multiplex signal inconsistency 3.DEF : Rear right-hand wheel speed multiplex signal inconsistency 4.DEF : Multiplex signal from invalid generating computer inconsistent 5.DEF : ABS multiplex connection fault or normally open brake signal invalid or inconsistency between normally open and normally closed brake signals

NOTES	**Order of priority in the event of more than one fault:** If there is a combination of the following faults: **– DF062 Multiplex line fault,** **– DF129 Electronic Stability Program (ESP),** **– DF185 No ABS/ESP multiplex signals,** deal with fault **DF062 Multiplex line fault** first.
	Conditions for applying fault finding procedures to stored faults: The fault appears after a road test.

1.DEF ***2.DEF*** ***3.DEF*** ***4.DEF***	***NOTES***	None

Carry out a multiplex network test (see **88B, Multiplexing**).

Run fault finding on the ABS system (see **38C, Anti-lock braking system**).

If the fault is still present, contact the Techline.

5.DEF	***NOTES***	None

Carry out a multiplex network test (see **88B, Multiplexing**).

Run fault finding on the injection system (see **13B, diesel injection**).

Run fault finding on the ABS system (see **38C, Anti-lock braking system**).

If the fault is still present, contact the Techline.

AFTER REPAIR	Deal with any faults detected by the diagnostic tool. Clear the computer fault memory. Carry out a road test followed by another check with the diagnostic tool.

GETtheMANUALS.org

DF291 PRESENT OR STORED	GEAR 1 SHIFT 1.DEF : Shift to 1st gear rejected in mode D. Values outside the limits 2.DEF : Shift to 1st gear imposed in manual mode. Values outside the limits

NOTES	**Conditions for applying fault finding procedures to stored faults:** The fault is declared present or stored after a road test.
	Special notes: Mechanical or hydraulic fault.

1.DEF ***2.DEF***	***NOTES***	**Order of priority in the event of more than one fault:** If there is a combination of the following faults: **– DF272 Brake 1 solenoid valve circuit,** **– DF274 Clutch 2 solenoid valve circuit,** **– DF275 Clutch 3 solenoid valve circuit,** deal with them first. **Order of priority in the event of more than one fault:** If there is a combination of the following faults: **– DF085 Sequence solenoid valve EVS1 circuit,** **– DF086 Sequence solenoid valve EVS2 circuit,** deal with them first.

Line pressure check:
Position D:
– The engine oil temperature, **PR004 Gearbox oil temperature** must be between 50 °C and 80 °C inclusive before performing the test.
– Put the line pressure tap plug in position D (see **Test 1: Measuring the line pressure**).
– Insert a pressure gauge in place of the plug.
– Put blocks under the vehicle wheels.
– Start the vehicle.
– Connect the diagnostic tool.
– Establish dialogue with the automatic transmission computer.
– Check parameter **PR110 LT pressure regulation solenoid valve current**.
– Depress the brake pedal to stop the vehicle rolling forward.
– Put the gear selector in position D.

With the engine idling, the pressure gauge reading should be between 3.7 bar and 4.3 bar.
The reading of **PR110 LT pressure regulation solenoid valve current** should be 1000 mA ± 10 mA.

Accelerate gently to reach an engine speed of 2000 rpm for 5 seconds.
The pressure gauge reading should be above the reading when idling, 3.7 bar.
The reading of **PR110 LT pressure regulation solenoid valve current** should be less than 1000 mA.

AFTER REPAIR	Deal with any faults detected by the diagnostic tool. Clear the computer fault memory. Carry out a road test followed by another check with the diagnostic tool.

GETtheMANUALS.org

DF291 **CONTINUED 1**	

Position R:
– The engine oil temperature, **PR004 Gearbox oil temperature** must be between 50 °C and 80 °C inclusive before performing the test.
– Put the line pressure tap plug in position D (see **Test 1: Measuring the line pressure**).
– Insert a pressure gauge in place of the plug.
– Put blocks under the vehicle wheels.
– Start the vehicle.
– Connect the diagnostic tool.
– Establish dialogue with the automatic transmission computer.
– Check parameter **PR110 LT pressure regulation solenoid valve current**.
– Depress the brake pedal to stop the vehicle rolling forward.
– Put the gear selector in position R.

With the engine idling, the pressure gauge reading should be between 5.7 bar and 6.9 bar.
The reading of **PR110 LT pressure regulation solenoid valve current** should be 1000 mA ± 10 mA.

Accelerate gently to reach an engine speed of 2000 rpm for 5 seconds.
The pressure gauge reading should be greater than the reading when idling, 5.7 bar.
The reading of **PR110 LT pressure regulation solenoid valve current** should be less than 1000 mA.

AFTER REPAIR	Deal with any faults detected by the diagnostic tool. Clear the computer fault memory. Carry out a road test followed by another check with the diagnostic tool.

GETtheMANUALS.org

DF291 **CONTINUED 2**	

Analysis:
Engine speed idling:

1. The line pressure readings on the pressure gauge are lower than the reference values:
   - Failure on line pressure control valve solenoid.
   - Mechanical failure (spring, valve) on line pressure control solenoid valve.
   - Oil pump failure.
   - Automatic transmission internal leakage.

In these 4 cases, contact the Techline to confirm the automatic transmission fault (replacement of the hydraulic distributor).

2. The line pressure reading on the pressure gauge in position R is less than the line pressure value in position D:
   - Mechanical failure (spring, valve) on line pressure control solenoid valve.

In this case, contact the Techline to confirm the automatic transmission solenoid valve fault (replacement of the hydraulic distributor).

Engine speed at 2000 rpm:

3. The readings on the pressure gauge are identical to the readings when the engine was at idling speed:
   - Failure on line pressure control solenoid valve.
   - Hydraulic distributor failure.

In these 2 cases, contact the Techline to confirm the automatic transmission fault (replacement of the hydraulic distributor).

4. The values read for parameter **PR110 LT pressure regulation solenoid valve current** are the same at 2000 rpm and when idling:
   - Computer failure.
   - Failure of electrical wiring inside the automatic transmission.

In these 2 cases, contact the Techline to confirm the automatic transmission internal wiring (replacement of the hydraulic distributor) or computer fault.

AFTER REPAIR	Deal with any faults detected by the diagnostic tool. Clear the computer fault memory. Carry out a road test followed by another check with the diagnostic tool.

GETtheMANUALS.org

DF291 **CONTINUED 3**	

Setting point check:
- The engine oil temperature, **PR004 Gearbox oil temperature** must be between 50 °C and 80 °C inclusive before performing the test.
- Put blocks under the vehicle wheels.
- Start the vehicle.
- Connect the diagnostic tool.
- Establish dialogue with the automatic transmission computer.
- Keep the brake pedal depressed to stop the vehicle rolling forward.
- Put the gear selector in position R.

Check parameter **PR006 Engine speed**.
Accelerate until you reach the setting point.

The engine speed value at the setting point should be between **2130 rpm and 2430 rpm** inclusive.

Recommendation: This test should not last over 5 seconds, and must not be repeated several times in succession, as this could damage the automatic transmission hydraulic system.

Analysis:
If the engine speed value is not reached, check that the engine is operating correctly.

If the fault is still present, contact the Techline to confirm the automatic transmission fault.

AFTER REPAIR	Deal with any faults detected by the diagnostic tool. Clear the computer fault memory. Carry out a road test followed by another check with the diagnostic tool.

GETtheMANUALS.org

DF292 PRESENT OR STORED	GEAR 2 SHIFT 1.DEF: Shift to 2nd gear rejected. Values outside the limits

NOTES	**Order of priority in the event of more than one fault:** If there is a combination of the following faults: **– DF272 Brake 1 solenoid valve circuit,** **– DF273 Clutch 1 solenoid valve circuit,** **– DF274 Clutch 2 solenoid valve circuit,** **– DF275 Clutch 3 solenoid valve circuit,** deal with them first.
	Conditions for applying fault finding procedures to stored faults: The fault is declared present after a road test.
	Special notes: Mechanical or hydraulic fault.

Line pressure check:
Position D:
The engine oil temperature must be between 50 °C and 80 °C inclusive before performing the test.
Put the line pressure tap plug in position D (see **Test 1: Measuring the line pressure**).
Insert a pressure gauge in place of the plug.
Put blocks under the vehicle wheels.
Start the vehicle.
Depress the brake pedal to stop the vehicle rolling forward.
Put the gear selector in position D.

Connect the diagnostic tool.
Establish dialogue with the automatic transmission computer.
Check parameter **PR110 LT pressure regulation solenoid valve current**.

With the engine idling, the pressure gauge reading should be between 3.72 bar and 4.32 bar.
The reading of **PR110 LT pressure regulation solenoid valve current** should be 1000 mA ± 10 mA.

Accelerate gently to reach an engine speed of 2000 rpm for 5 seconds.
The pressure gauge reading should be greater than the reading when idling.
The reading of **PR110 LT pressure regulation solenoid valve current** should be less than 1000 mA.

AFTER REPAIR	Deal with any faults detected by the diagnostic tool. Clear the computer fault memory. Carry out a road test followed by another check with the diagnostic tool.

GETtheMANUALS.org

DF292 **CONTINUED 1**	

Position R:
The engine oil temperature must be between 50 °C and 80 °C inclusive before performing the test.
Put the line pressure tap plug in position R (see **Test 1: Measuring the line pressure**).
Insert a pressure gauge in place of the plug.
Start the vehicle.
Depress the brake pedal to stop the vehicle rolling forward.
Put the gear selector in position R.
Connect the diagnostic tool.
Establish dialogue with the automatic transmission computer.
Check parameter **PR110 LT pressure regulation solenoid valve current**.

With the engine idling, the pressure gauge reading should be between 3.72 bar and 4.32 bar.
The reading of **PR110 LT pressure regulation solenoid valve current** should be 1000 mA ± 10 mA.

Accelerate gently to reach an engine speed of 2000 rpm for 5 seconds.
The pressure gauge reading should be greater than the reading when idling.
The reading of **PR110 LT pressure regulation solenoid valve current** should be less than 1000 mA.

AFTER REPAIR	Deal with any faults detected by the diagnostic tool. Clear the computer fault memory. Carry out a road test followed by another check with the diagnostic tool.

GETtheMANUALS.org

DF292 **CONTINUED 2**	

Analysis:
Engine speed idling:

1. The line pressure readings on the pressure gauge are lower than the reference values:
   - Failure on line pressure control solenoid valve solenoid.
   - Mechanical failure (spring, valve) on line pressure control solenoid valve.
   - Oil pump failure.
   - Automatic transmission internal leakage.

In these 4 cases, contact the Techline to confirm the automatic transmission fault (replacement of the hydraulic distributor).

2. The line pressure reading on the pressure gauge in position R is less than the line pressure value in position D:
   - Mechanical failure (spring, valve) on line pressure control solenoid valve.

In this case, contact the Techline to confirm the automatic transmission solenoid valve fault (replacement of the hydraulic distributor).

Engine speed at 2000 rpm:

3. The readings on the pressure gauge are identical to the readings when the engine was at idling speed:
   - Failure on line pressure control solenoid valve.
   - Hydraulic distributor failure.

In these 2 cases, contact the Techline to confirm the automatic transmission fault (replacement of the hydraulic distributor).

4. The readings of parameter **PR110 LT pressure regulation solenoid valve current** are the same at 2000 rpm and when idling:
   - Computer failure.
   - Failure of electrical wiring inside the automatic transmission.

In these 2 cases, contact the Techline to confirm the automatic transmission internal wiring (replacement of the hydraulic distributor) or computer fault.

AFTER REPAIR	Deal with any faults detected by the diagnostic tool. Clear the computer fault memory. Carry out a road test followed by another check with the diagnostic tool.

GETtheMANUALS.org

DF293 PRESENT OR STORED	GEAR 3 SHIFT 1.DEF: Shift to 3rd gear rejected. Values outside the limits

NOTES	**Order of priority in the event of more than one fault:** If there is a combination of the following faults: **– DF273 Clutch 1 solenoid valve circuit,** **– DF274 Clutch 2 solenoid valve circuit,** **– DF275 Clutch 3 solenoid valve circuit,** deal with them first.
	Conditions for applying fault finding procedures to stored faults: The fault is declared present after a road test.
	Special notes: Mechanical or hydraulic fault.

Line pressure check:
Position D:
The engine oil temperature must be between 50 °C and 80 °C inclusive before performing the test.
Put the line pressure tap plug in position D (see **Test 1: Measuring the line pressure**).
Insert a pressure gauge in place of the plug.
Put blocks under the vehicle wheels.
Start the vehicle.
Depress the brake pedal to stop the vehicle rolling forward.
Put the gear selector in position D.

Connect the diagnostic tool.
Establish dialogue with the automatic transmission computer.
Check parameter **PR110 LT pressure regulation solenoid valve current**.

With the engine idling, the pressure gauge reading should be between 3.72 bar and 4.32 bar.
The reading of **PR110 LT pressure regulation solenoid valve current** should be 1000 mA ± 10 mA.

Accelerate gently to reach an engine speed of 2000 rpm for 5 seconds.
The pressure gauge reading should be greater than the reading when idling.
The reading of **PR110 LT pressure regulation solenoid valve current** should be less than 1000 mA.

AFTER REPAIR	Deal with any faults detected by the diagnostic tool. Clear the computer fault memory. Carry out a road test followed by another check with the diagnostic tool.

GETtheMANUALS.org

DF293 **CONTINUED 1**	

Position R:
The engine oil temperature must be between 50 °C and 80 °C inclusive before performing the test.
Put the line pressure tap plug in position R (see **Test 1: Measuring the line pressure**).
Insert a pressure gauge in place of the plug.
Start the vehicle.
Depress the brake pedal to stop the vehicle rolling forward.
Put the gear selector in position R.
Connect the diagnostic tool.
Establish dialogue with the automatic transmission computer.
Check parameter **PR110 LT pressure regulation solenoid valve current**.

With the engine idling, the pressure gauge reading should be between 3.72 bar and 4.32 bar.
The reading of **PR110 LT pressure regulation solenoid valve current** should be 1000 mA ± 10 mA.

Accelerate gently to reach an engine speed of 2000 rpm for 5 seconds.
The pressure gauge reading should be greater than the reading when idling.
The reading of **PR110 LT pressure regulation solenoid valve current** should be less than 1000 mA.

AFTER REPAIR	Deal with any faults detected by the diagnostic tool. Clear the computer fault memory. Carry out a road test followed by another check with the diagnostic tool.

GETtheMANUALS.org

DF293 **CONTINUED 2**	

Analysis:
Engine speed idling:

1. The line pressure readings on the pressure gauge are lower than the reference values:
   - Failure on line pressure control solenoid valve solenoid.
   - Mechanical failure (spring, valve) on line pressure control solenoid valve.
   - Oil pump failure.
   - Automatic transmission internal leakage.

In these 4 cases, contact the Techline to confirm the automatic transmission fault (replacement of the hydraulic distributor).

2. The line pressure reading on the pressure gauge in position R is less than the line pressure value in position D:
   - Mechanical failure (spring, valve) on line pressure control solenoid valve.

In this case, contact the Techline to confirm the automatic transmission solenoid valve fault (replacement of the hydraulic distributor).

Engine speed at 2000 rpm:

3. The readings on the pressure gauge are identical to the readings when the engine was at idling speed:
   - Failure on line pressure control solenoid valve.
   - Hydraulic distributor failure.

In these 2 cases, contact the Techline to confirm the automatic transmission fault (replacement of the hydraulic distributor).

4. The readings of parameter **PR110 LT pressure regulation solenoid valve current** are the same at 2000 rpm and when idling:
   - Computer failure.
   - Failure of electrical wiring inside the automatic transmission.

In these 2 cases, contact the Techline to confirm the automatic transmission internal wiring (replacement of the hydraulic distributor) or computer fault.

AFTER REPAIR	Deal with any faults detected by the diagnostic tool. Clear the computer fault memory. Carry out a road test followed by another check with the diagnostic tool.

GETtheMANUALS.org

DF294 PRESENT OR STORED	GEAR 4 SHIFT Shift to 4th gear rejected. Values outside the limits

NOTES	**Conditions for applying fault finding procedures to stored faults:** The fault is declared present after a road test. **Special notes:** Mechanical or hydraulic fault.

Line pressure check:
Position D:
The engine oil temperature must be between 50 °C and 80 °C inclusive before performing the test.
Put the line pressure tap plug in position D (see **Test 1: Measuring the line pressure**).
Insert a pressure gauge in place of the plug.
Put blocks under the vehicle wheels.
Start the vehicle.
Depress the brake pedal to stop the vehicle rolling forward.
Put the gear selector in position D.

Connect the diagnostic tool.
Establish dialogue with the automatic transmission computer.
Check parameter **PR110 LT pressure regulation solenoid valve current**.

With the engine idling, the pressure gauge reading should be between 3.72 bar and 4.32 bar.
The reading of **PR110 LT pressure regulation solenoid valve current** should be 1000 mA ± 10 mA.

Accelerate gently to reach an engine speed of 2000 rpm for 5 seconds.
The pressure gauge reading should be greater than the reading when idling.
The reading of **PR110 LT pressure regulation solenoid valve current** should be less than 1000 mA.

AFTER REPAIR	Deal with any faults detected by the diagnostic tool. Clear the computer fault memory. Carry out a road test followed by another check with the diagnostic tool.

GETtheMANUALS.org

DF294 **CONTINUED 1**	

Position R:
The engine oil temperature must be between 50 °C and 80 °C inclusive before performing the test.
Put the line pressure tap plug in position R (see **Test 1: Measuring the line pressure**).
Insert a pressure gauge in place of the plug.
Start the vehicle.
Depress the brake pedal to stop the vehicle rolling forward.
Put the gear selector in position R.
Connect the diagnostic tool.
Establish dialogue with the automatic transmission computer.
Check parameter **PR110 LT pressure regulation solenoid valve current**.

With the engine idling, the pressure gauge reading should be between 3.72 bar and 4.32 bar.
The reading of **PR110 LT pressure regulation solenoid valve current** should be 1000 mA ± 10 mA.

Accelerate gently to reach an engine speed of 2000 rpm for 5 seconds.
The pressure gauge reading should be greater than the reading when idling.
The reading of **PR110 LT pressure regulation solenoid valve current** should be less than 1000 mA.

AFTER REPAIR	Deal with any faults detected by the diagnostic tool. Clear the computer fault memory. Carry out a road test followed by another check with the diagnostic tool.

GETtheMANUALS.org

DF294 **CONTINUED 2**	

Analysis:
Engine speed idling:

1. The line pressure readings on the pressure gauge are lower than the reference values:
   - Failure on line pressure control solenoid valve solenoid.
   - Mechanical failure (spring, valve) on line pressure control solenoid valve.
   - Oil pump failure.
   - Automatic transmission internal leakage.

In these 4 cases, contact the Techline to confirm the automatic transmission fault (replacement of the hydraulic distributor).

2. The line pressure reading on the pressure gauge in position R is less than the line pressure value in position D:
   - Mechanical failure (spring, valve) on line pressure control solenoid valve.

In this case, contact the Techline to confirm the automatic transmission solenoid valve fault (replacement of the hydraulic distributor).

Engine speed at 2000 rpm:

3. The readings on the pressure gauge are identical to the readings when the engine was at idling speed:
   - Failure on line pressure control solenoid valve.
   - Hydraulic distributor failure.

In these 2 cases, contact the Techline to confirm the automatic transmission fault (replacement of the hydraulic distributor).

4. The readings of parameter **PR110 LT pressure regulation solenoid valve current** are the same at 2000 rpm and when idling:
   - Computer failure.
   - Failure of electrical wiring inside the automatic transmission.

In these 2 cases, contact the Techline to confirm the automatic transmission internal wiring (replacement of the hydraulic distributor) or computer fault.

AFTER REPAIR	Deal with any faults detected by the diagnostic tool. Clear the computer fault memory. Carry out a road test followed by another check with the diagnostic tool.

GETtheMANUALS.org

DF295 PRESENT OR STORED	GEAR 5 SHIFT Shift to 5th gear rejected. Values outside the limits

NOTES	**Conditions for applying fault finding procedures to stored faults:** The fault is declared present after a road test. **Special notes:** Mechanical or hydraulic fault.

Line pressure check:
Position D:
The engine oil temperature must be between 50 °C and 80 °C inclusive before performing the test.
Put the line pressure tap plug in position D (see **Test 1: Measuring the line pressure**).
Insert a pressure gauge in place of the plug.
Put blocks under the vehicle wheels.
Start the vehicle.
Depress the brake pedal to stop the vehicle rolling forward.
Put the gear selector in position D.

Connect the diagnostic tool.
Establish dialogue with the automatic transmission computer.
Check parameter **PR110 LT pressure regulation solenoid valve current**.

With the engine idling, the pressure gauge reading should be between 3.72 bar and 4.32 bar.
The reading of **PR110 LT pressure regulation solenoid valve current** should be 1000 mA ± 10 mA.

Accelerate gently to reach an engine speed of 2000 rpm for 5 seconds.
The pressure gauge reading should be greater than the reading when idling.
The reading of **PR110 LT pressure regulation solenoid valve current** should be less than 1000 mA.

AFTER REPAIR	Deal with any faults detected by the diagnostic tool. Clear the computer fault memory. Carry out a road test followed by another check with the diagnostic tool.

GETtheMANUALS.org

DF295 **CONTINUED 1**	

Position R:
The engine oil temperature must be between 50 °C and 80 °C inclusive before performing the test.
Put the line pressure tap plug in position R (see **Test 1: Measuring the line pressure**).
Insert a pressure gauge in place of the plug.
Start the vehicle.
Depress the brake pedal to stop the vehicle rolling forward.
Put the gear selector in position R.
Connect the diagnostic tool.
Establish dialogue with the automatic transmission computer.
Check parameter **PR110 LT pressure regulation solenoid valve current**.

With the engine idling, the pressure gauge reading should be between 3.72 bar and 4.32 bar.
The reading of **PR110 LT pressure regulation solenoid valve current** should be 1000 mA ± 10 mA.

Accelerate gently to reach an engine speed of 2000 rpm for 5 seconds.
The pressure gauge reading should be greater than the reading when idling.
The reading of **PR110 LT pressure regulation solenoid valve current** should be less than 1000 mA.

AFTER REPAIR	Deal with any faults detected by the diagnostic tool. Clear the computer fault memory. Carry out a road test followed by another check with the diagnostic tool.

GETtheMANUALS.org

DF295 **CONTINUED 2**	

Analysis:
Engine speed idling:

1. The line pressure readings on the pressure gauge are lower than the reference values:
   - Failure on line pressure control solenoid valve solenoid.
   - Mechanical failure (spring, valve) on line pressure control solenoid valve.
   - Oil pump failure.
   - Automatic transmission internal leakage.

In these 4 cases, contact the Techline to confirm the automatic transmission fault (replacement of the hydraulic distributor).

2. The line pressure reading on the pressure gauge in position R is less than the line pressure value in position D:
   - Mechanical failure (spring, valve) on line pressure control solenoid valve.

In this case, contact the Techline to confirm the automatic transmission solenoid valve fault (replacement of the hydraulic distributor).

Engine speed at 2000 rpm:

3. The readings on the pressure gauge are identical to the readings when the engine was at idling speed:
   - Failure on line pressure control solenoid valve.
   - Hydraulic distributor failure.

In these 2 cases, contact the Techline to confirm the automatic transmission fault (replacement of the hydraulic distributor).

4. The readings of parameter **PR110 LT pressure regulation solenoid valve current** are the same at 2000 rpm and when idling:
   - Computer failure.
   - Failure of electrical wiring inside the automatic transmission.

In these 2 cases, contact the Techline to confirm the automatic transmission internal wiring (replacement of the hydraulic distributor) or computer fault.

AFTER REPAIR	Deal with any faults detected by the diagnostic tool. Clear the computer fault memory. Carry out a road test followed by another check with the diagnostic tool.

GETtheMANUALS.org

DF296 PRESENT OR STORED	GEAR 6 SHIFT 1.DEF: Shift to 6th gear rejected. Values outside the limits

NOTES	**Conditions for applying fault finding procedures to stored faults:** The fault is declared present after a road test. **Special notes:** Mechanical or hydraulic fault.

Line pressure check:
Position D:
The engine oil temperature must be between 50 °C and 80 °C inclusive before performing the test.
Put the line pressure tap plug in position D (see **Test 1: Measuring the line pressure**).
Insert a pressure gauge in place of the plug.
Put blocks under the vehicle wheels.
Start the vehicle.
Depress the brake pedal to stop the vehicle rolling forward.
Put the gear selector in position D.

Connect the diagnostic tool.
Establish dialogue with the automatic transmission computer.
Check parameter **PR110 LT pressure regulation solenoid valve current**.

With the engine idling, the pressure gauge reading should be between 3.72 bar and 4.32 bar.
The reading of **PR110 LT pressure regulation solenoid valve current** should be 1000 mA ± 10 mA.

Accelerate gently to reach an engine speed of 2000 rpm for 5 seconds.
The pressure gauge reading should be greater than the reading when idling.
The reading of **PR110 LT pressure regulation solenoid valve current** should be less than 1000 mA.

AFTER REPAIR	Deal with any faults detected by the diagnostic tool. Clear the computer fault memory. Carry out a road test followed by another check with the diagnostic tool.

GETtheMANUALS.org

DF296 **CONTINUED 1**	

Position R:
The engine oil temperature must be between 50 °C and 80 °C inclusive before performing the test.
Put the line pressure tap plug in position R (see **Test 1: Measuring the line pressure**).
Insert a pressure gauge in place of the plug.
Start the vehicle.
Depress the brake pedal to stop the vehicle rolling forward.
Put the gear selector in position R.
Connect the diagnostic tool.
Establish dialogue with the automatic transmission computer.
Check parameter **PR110 LT pressure regulation solenoid valve current**.

With the engine idling, the pressure gauge reading should be between 3.72 bar and 4.32 bar.
The reading of **PR110 LT pressure regulation solenoid valve current** should be 1000 mA ± 10 mA.

Accelerate gently to reach an engine speed of 2000 rpm for 5 seconds.
The pressure gauge reading should be greater than the reading when idling.
The reading of **PR110 LT pressure regulation solenoid valve current** should be less than 1000 mA.

AFTER REPAIR	Deal with any faults detected by the diagnostic tool. Clear the computer fault memory. Carry out a road test followed by another check with the diagnostic tool.

GETtheMANUALS.org

DF296 **CONTINUED 2**	

Analysis:
Engine speed idling:

1. The line pressure readings on the pressure gauge are lower than the reference values:
   - Failure on line pressure control solenoid valve solenoid.
   - Mechanical failure (spring, valve) on line pressure control solenoid valve.
   - Oil pump failure.
   - Automatic transmission internal leakage.

In these 4 cases, contact the Techline to confirm the automatic transmission fault (replacement of the hydraulic distributor).

2. The line pressure reading on the pressure gauge in position R is less than the line pressure value in position D:
   - Mechanical failure (spring, valve) on line pressure control solenoid valve.

In this case, contact the Techline to confirm the automatic transmission solenoid valve fault (replacement of the hydraulic distributor).

Engine speed at 2000 rpm:

3. The readings on the pressure gauge are identical to the readings when the engine was at idling speed:
   - Failure on line pressure control solenoid valve.
   - Hydraulic distributor failure.

In these 2 cases, contact the Techline to confirm the automatic transmission fault (replacement of the hydraulic distributor).

4. The readings of parameter **PR110 LT pressure regulation solenoid valve current** are the same at 2000 rpm and when idling:
   - Computer failure.
   - Failure of electrical wiring inside the automatic transmission.

In these 2 cases, contact the Techline to confirm the automatic transmission internal wiring (replacement of the hydraulic distributor) or computer fault.

AFTER REPAIR	Deal with any faults detected by the diagnostic tool. Clear the computer fault memory. Carry out a road test followed by another check with the diagnostic tool.

GETtheMANUALS.org

DF297 PRESENT OR STORED	REVERSE GEAR SHIFT 1.DEF: Shift to reverse gear rejected. Values outside the limits

NOTES	**Conditions for applying fault finding procedures to stored faults:** The fault is declared present after a road test. **Special notes:** Mechanical or hydraulic fault.

Line pressure check:
Position D:
The engine oil temperature must be between 50 °C and 80 °C inclusive before performing the test.
Put the line pressure tap plug in position D (see **Test 1: Measuring the line pressure**).
Insert a pressure gauge in place of the plug.
Put blocks under the vehicle wheels.
Start the vehicle.
Depress the brake pedal to stop the vehicle rolling forward.
Put the gear selector in position D.

Connect the diagnostic tool.
Establish dialogue with the automatic transmission computer.
Check parameter **PR110 LT pressure regulation solenoid valve current**.

With the engine idling, the pressure gauge reading should be between 3.72 bar and 4.32 bar.
The reading of **PR110 LT pressure regulation solenoid valve current** should be 1000 mA ± 10 mA.

Accelerate gently to reach an engine speed of 2000 rpm for 5 seconds.
The pressure gauge reading should be greater than the reading when idling.
The reading of **PR110 LT pressure regulation solenoid valve current** should be less than 1000 mA.

AFTER REPAIR	Deal with any faults detected by the diagnostic tool. Clear the computer fault memory. Carry out a road test followed by another check with the diagnostic tool.

GETtheMANUALS.org

DF297 **CONTINUED 1**	

Position R:
The engine oil temperature must be between 50 °C and 80 °C inclusive before performing the test.
Put the line pressure tap plug in position R (see **Test 1: Measuring the line pressure**).
Insert a pressure gauge in place of the plug.
Start the vehicle.
Depress the brake pedal to stop the vehicle rolling forward.
Put the gear selector in position R.
Connect the diagnostic tool.
Establish dialogue with the automatic transmission computer.
Check parameter **PR110 LT pressure regulation solenoid valve current**.

With the engine idling, the pressure gauge reading should be between 3.72 bar and 4.32 bar.
The reading of **PR110 LT pressure regulation solenoid valve current** should be 1000 mA ± 10 mA.

Accelerate gently to reach an engine speed of 2000 rpm for 5 seconds.
The pressure gauge reading should be greater than the reading when idling.
The reading of **PR110 LT pressure regulation solenoid valve current** should be less than 1000 mA.

AFTER REPAIR	Deal with any faults detected by the diagnostic tool. Clear the computer fault memory. Carry out a road test followed by another check with the diagnostic tool.

GETtheMANUALS.org

DF297 **CONTINUED 2**	

Analysis:
Engine speed idling:

1. The line pressure readings on the pressure gauge are lower than the reference values:
   - Failure on line pressure control solenoid valve solenoid.
   - Mechanical failure (spring, valve) on line pressure control solenoid valve.
   - Oil pump failure.
   - Automatic transmission internal leakage.

In these 4 cases, contact the Techline to confirm the automatic transmission fault (replacement of the hydraulic distributor).

2. The line pressure reading on the pressure gauge in position R is less than the line pressure value in position D:
   - Mechanical failure (spring, valve) on line pressure control solenoid valve.

In this case, contact the Techline to confirm the automatic transmission solenoid valve fault (replacement of the hydraulic distributor).

Engine speed at 2000 rpm:

3. The readings on the pressure gauge are identical to the readings when the engine was at idling speed:
   - Failure on line pressure control solenoid valve.
   - Hydraulic distributor failure.

In these 2 cases, contact the Techline to confirm the automatic transmission fault (replacement of the hydraulic distributor).

4. The readings of **parameter PR110 LT pressure regulation solenoid valve current** are the same at 2000 rpm and when idling:
   - Computer failure.
   - Failure of electrical wiring inside the automatic transmission.

In these 2 cases, contact the Techline to confirm the automatic transmission internal wiring (replacement of the hydraulic distributor) or computer fault.

AFTER REPAIR	Deal with any faults detected by the diagnostic tool. Clear the computer fault memory. Carry out a road test followed by another check with the diagnostic tool.

GETtheMANUALS.org

DF298 PRESENT OR STORED	GEAR SHIFTS Shift to 1st or reverse gear rejected, neutral imposed by the computer.

NOTES	**Conditions for applying fault finding procedures to stored faults:** The fault is declared present after a road test. **Special notes:** Mechanical or hydraulic fault.

Line pressure check:
Position D:
The engine oil temperature must be between 50 °C and 80 °C inclusive before performing the test.
Put the line pressure tap plug in position D (see **Test 1: Measuring the line pressure**).
Insert a pressure gauge in place of the plug.
Put blocks under the vehicle wheels.
Start the vehicle.
Depress the brake pedal to stop the vehicle rolling forward.
Put the gear selector in position D.

Connect the diagnostic tool.
Establish dialogue with the automatic transmission computer.
Check parameter **PR110 LT pressure regulation solenoid valve current**.

With the engine idling, the pressure gauge reading should be between 3.72 bar and 4.32 bar.
The reading of **PR110 LT pressure regulation solenoid valve current** should be 1000 mA ± 10 mA.

Accelerate gently to reach an engine speed of 2000 rpm for 5 seconds.
The pressure gauge reading should be greater than the reading when idling.
The reading of **PR110 LT pressure regulation solenoid valve current** should be less than 1000 mA.

AFTER REPAIR	Deal with any faults detected by the diagnostic tool. Clear the computer fault memory. Carry out a road test followed by another check with the diagnostic tool.

GETtheMANUALS.org

DF298 **CONTINUED 1**	

Position R:
The engine oil temperature must be between 50 °C and 80 °C inclusive before performing the test.
Put the line pressure tap plug in position R (see **Test 1: Measuring the line pressure**).
Insert a pressure gauge in place of the plug.
Start the vehicle.
Depress the brake pedal to stop the vehicle rolling forward.
Put the gear selector in position R.
Connect the diagnostic tool.
Establish dialogue with the automatic transmission computer.
Check parameter **PR110 LT pressure regulation solenoid valve current**.

With the engine idling, the pressure gauge reading should be between 3.72 bar and 4.32 bar.
The reading of **PR110 LT pressure regulation solenoid valve current** should be 1000 mA ± 10 mA.

Accelerate gently to reach an engine speed of 2000 rpm for 5 seconds.
The pressure gauge reading should be greater than the reading when idling.
The reading of **PR110 LT pressure regulation solenoid valve current** should be less than 1000 mA.

AFTER REPAIR	Deal with any faults detected by the diagnostic tool. Clear the computer fault memory. Carry out a road test followed by another check with the diagnostic tool.

GETtheMANUALS.org

DF298 **CONTINUED 2**	

Analysis:
Engine speed idling:

1. The line pressure readings on the pressure gauge are lower than the reference values:
   - Failure on line pressure control solenoid valve solenoid.
   - Mechanical failure (spring, valve) on line pressure control solenoid valve.
   - Oil pump failure.
   - Automatic transmission internal leakage.

In these 4 cases, contact the Techline to confirm the automatic transmission fault (replacement of the hydraulic distributor).

2. The line pressure reading on the pressure gauge in position R is less than the line pressure value in position D:
   - Mechanical failure (spring, valve) on line pressure control solenoid valve.

In this case, contact the Techline to confirm the automatic transmission solenoid valve fault (replacement of the hydraulic distributor).

Engine speed at 2000 rpm:

3. The readings on the pressure gauge are identical to the readings when the engine was at idling speed:
   - Failure on line pressure control solenoid valve.
   - Hydraulic distributor failure.

In these 2 cases, contact the Techline to confirm the automatic transmission fault (replacement of the hydraulic distributor).

4. The readings of parameter **PR110 LT pressure regulation solenoid valve current** are the same at 2000 rpm and when idling:
   - Computer failure.
   - Failure of electrical wiring inside the automatic transmission.

In these 2 cases, contact the Techline to confirm the automatic transmission internal wiring (replacement of the hydraulic distributor) or computer fault.

AFTER REPAIR	Deal with any faults detected by the diagnostic tool. Clear the computer fault memory. Carry out a road test followed by another check with the diagnostic tool.

GETtheMANUALS.org

NOTES	Only check conformity after a **full check** with the diagnostic tool. The values shown in this conformity check are given as examples. **Application condition: Engine stopped, ignition on.**

MAIN SCREEN

Order	Function	Parameter or Status checked or Action	Display and Notes	Fault finding
1	Coolant temperature	**PR001:** Coolant temperature	**Indicates the engine coolant temperature in °C**	In the event of a fault, refer to the interpretation of parameter **PR001 Coolant temperature**.
2	Gearbox speed	**PR005:** Gearbox output speed	**0 rpm**	In the event of a fault, consult the interpretation of fault **DF287 Gearbox output speed signal**.
3		**PR014:** Gearbox input speed	**0 rpm**	In the event of a fault, consult the interpretation of fault **DF251 Gearbox input speed**.
4	Gear	**ET013:** Gear engaged	**1:** Gear engaged: 1st **2:** Gear engaged: 2nd **3:** Gear engaged: 3rd **4:** Gear engaged: 4th **5:** Gear engaged: 5th **6:** Gear engaged: 6th **R:** Gear engaged: R **P/N:** Park/Neutral position **SAFE:** Safe mode **DECLUTCHED:** Declutching when stationary	In the event of a fault, consult the interpretation of fault **DF298 Gear shifts**.
5	Operating mode recognition	**ET050:** Operating mode recognition	**STATUS1:** Economy mode **STATUS2:** Sports mode **STATUS3:** Manual mode	**NONE**

GETtheMANUALS.org

NOTES	Only check conformity after a **full check** with the diagnostic tool. The values shown in this conformity check are given as examples. **Application condition: Engine stopped, ignition on.**

MAIN SCREEN (CONTINUED)

Order	Function	Parameter or Status checked or Action		Display and Notes	Fault finding
6	GMV request	**ET252:**	Fan unit request by automatic transmission	**ACTIVE** **INACTIVE**	If there is a fault, carry out fault finding on the injection system (See **13B, diesel injection**).
7	Engine speed	**PR006:**	Engine speed	**0 rpm**	In the event of a fault, consult the interpretation of parameter **PR006 Engine speed**.
8	Vehicle speed	**PR105:**	Vehicle speed	**0 mph or km/h**	If there is a fault, consult the interpretation of fault **DF185 No ABS/ESP multiplex signal**.
9	Gearbox oil temperature sensor	**PR103:**	Gearbox oil temperature sensor voltage	**2.8 V**	In the event of a fault, consult the interpretation of fault **DF284 Gearbox oil temperature**.
10	Fault warning light	**ET084:**	Fault warning light lit	**NO** **YES**	In the event of a fault, consult the interpretation of status **ET084 Instrument panel warning light**.
11	Torque converter	**ET071:**	Torque converter	**OPEN**	In the event of a fault, refer to the interpretation of faults: **– DF090 Converter lockup solenoid valve circuit,** **– DF097 Converter lockup,** **– DF281 Converter lockup solenoid valve return current**
12	Gear change	**ET251:**	Gear change	**AUTHORISED** **REJECTED** **IN PROGRESS**	If there is a fault, run a multiplex network test, consult the interpretation of faults: **– DF286 Lever position sensor signal,** **– DF287 Gearbox output speed signal,** **– DF251 Gearbox input speed**

GETtheMANUALS.org

NOTES	Only check conformity after a **full check** with the diagnostic tool. The values shown in this conformity check are given as examples. **Application condition: Engine stopped, ignition on.**

TRANSMISSION:
RELEASE/LOCKUP

Order	Function	Parameter or Status checked or Action	Display and Notes	Fault finding
1	Torque converter	**ET071:** Torque converter	**OPEN**	In the event of a fault, refer to the interpretation of faults **– DF090 Converter lockup solenoid valve circuit, – DF097 Converter lockup, – DF281 Converter lockup solenoid valve return current**
2	Lever position	**ET012:** Gear lever position	**P:** lever in position P **R:** lever in position R **N:** lever in position N **D:** lever in position D **Intermediate:** Lever in intermediate position **Invalid:** gear lever in intermediate position (invalid) **STATUS1:** Gear lever in intermediate position (N/D) **STATUS2:** Gear lever in intermediate position (P/R) or (N/R)	In the event of a fault, consult the interpretation of fault **DF286 Lever position sensor signal**
3	Gear	**ET013:** Gear engaged	**1:** Gear engaged: 1st **2:** Gear engaged: 2nd **3:** Gear engaged: 3rd **4:** Gear engaged: 4th **5:** Gear engaged: 5th **6:** Gear engaged: 6th **R:** Gear engaged: R **P/N:** Park/Neutral position **SAFE:** Safe mode **DECLUTCHED:** Declutching when stationary	In the event of a fault, consult the interpretation of fault **DF298 Gear shifts**

GETtheMANUALS.org

NOTES	Only check conformity after a **full check** with the diagnostic tool. The values shown in this conformity check are given as examples. **Application condition: Engine stopped with ignition on, ET012 Gear lever position** in position **P**.

TRANSMISSION:
RELEASE/LOCKUP (CONTINUED 1)

Order	Function	Parameter or Status checked or Action	Display and Notes	Fault finding
4	Operating mode recognition	**ET050:** Operating mode recognition	**STATUS1:** Economy mode **STATUS2:** Sports mode **STATUS3:** Manual mode	**NONE**
5	Gear change	**ET251:** Gear change	**AUTHORISED** **IN PROGRESS** **REJECTED**	If there is a fault, run a multiplex network test, consult the interpretation of faults: **– DF286 Lever position sensor signal,** **– DF287 Gearbox output speed signal,** **– DF251 Gearbox input speed**
6	Converter lockup solenoid valve	**ET038:** *Converter lockup solenoid valve CTRL	**INACTIVE**	If there is a fault, consult the interpretation of fault **DF090 Converter lockup solenoid valve circuit**
7	Gear shift strategy	**ET072:** Gear shift strategy	**STATUS1:** Starting mode	If there is a fault, contact the Techline
8	Engine speed	**PR006:** Engine speed	**0 rpm**	In the event of a fault, consult the interpretation of parameter **PR006 Engine speed**
9	Vehicle speed	**PR105:** Vehicle speed	**0 mph or km/h**	If there is a fault, consult the interpretation of fault **DF185 No ABS/ESP multiplex signal**

***CTRL: control**

GETtheMANUALS.org

NOTES	Only check conformity after a **full check** with the diagnostic tool. The values shown in this conformity check are given as examples. **Application condition: Engine stopped with ignition on, ET012 Gear lever position** in position **P**.

TRANSMISSION:
RELEASE/LOCKUP (CONTINUED 2)

Order	Function	Parameter or Status checked or Action	Display and Notes	Fault finding
10	Gearbox speed	**PR005:** Gearbox output speed	**0 rpm**	In the event of a fault, consult the interpretation of fault **DF287 Gearbox output speed signal**
11		**PR014:** Gearbox input speed	**0 rpm**	In the event of a fault, consult the interpretation of fault **DF251 Gearbox input speed**
12	Converter lockup solenoid valve current	**PR108:** Converter lockup *SV current	Engine stopped (**ET013 gear engaged: P/N**): **200 mA**	If there is a fault, consult the interpretation of fault **DF090 Converter lockup solenoid valve circuit**
13	Converter lockup solenoid valve return current	**PR061:** Converter lockup solenoid valve return current	Engine stopped (**ET013 gear engaged: P/N**): **200 mA**	If there is a fault, consult the interpretation of fault **DF281 Solenoid valve lockup solenoid valve return current**

***SV: solenoid valve**

GETtheMANUALS.org

NOTES	Only check conformity after a **full check** with the diagnostic tool. The values shown in this conformity check are given as examples. **Application condition: Engine stopped, ignition on.**

TRANSMISSION:
DECLUTCHING WHEN STATIONARY

Order	Function	Parameter or Status checked or Action	Display and Notes	Fault finding
1	Lever position	**ET012:** Gear lever position	**P:** lever in position P **R:** lever in position R **N:** lever in position N **D:** lever in position D **Intermediate:** Lever in intermediate position **Invalid:** gear lever in intermediate position (invalid) **STATUS1:** Gear lever in intermediate position (N/D) **STATUS2:** Gear lever in intermediate position (P/R) or (N/R)	In the event of a fault, consult the interpretation of fault **DF286 Lever position sensor signal**
2	Gear	**ET013:** Gear engaged	**1:** Gear engaged: 1st **2:** Gear engaged: 2nd **3:** Gear engaged: 3rd **4:** Gear engaged: 4th **5:** Gear engaged: 5th **6:** Gear engaged: 6th **R:** Gear engaged: R **P/N:** Park/Neutral position **SAFE:** Safe mode **DECLUTCHED:** Declutching when stationary	In the event of a fault, consult the interpretation of fault **DF298 Gear shifts**
3	Operating mode recognition	**ET050:** Operating mode recognition	**STATUS1:** Economy mode **STATUS2:** Sports mode **STATUS3:** Manual mode	**NONE**
4	Gear shift strategy	**ET072:** Gear shift strategy	**STATUS1:** Starting mode	If there is a fault, contact the Techline
5	Brake switch	**ET037:** Brake switch signal	**RELEASED:** Released **PRESSED:** Depressed **INVALID:** Invalid	In the event of a fault, consult the interpretation of status **ET037 Brake switch signal**

GETtheMANUALS.org

NOTES	Only check conformity after a **full check** with the diagnostic tool. The values shown in this conformity check are given as examples. **Application condition: Engine stopped with ignition on, ET012 "Gear lever position"** in position **P**.

TRANSMISSION:
DECLUTCHING WHEN STATIONARY (CONTINUED 1)

Order	Function	Parameter or Status checked or Action	Display and Notes	Fault finding
6	Engine speed	**PR006:** Engine speed	**Indicates the engine speed 0 rpm**	In the event of a fault, consult the interpretation of parameter **PR006 Engine speed**.
7	Vehicle speed	**PR105:** Vehicle speed	**Indicates the vehicle speed 0 mph or km/h**	If there is a fault, consult the interpretation of fault **DF185 No ABS/ESP multiplex signal**.
8	Gearbox speed	**PR005:** Gearbox output speed	**0 rpm**	In the event of a fault, consult the interpretation of fault **DF287 Gearbox output speed signal**.
9		**PR014:** Gearbox input speed	**0 rpm**	In the event of a fault, consult the interpretation of fault **DF251 Gearbox input speed**.
10	Accelerator pedal	**PR022:** Accelerator pedal position	**Indicates the position of the accelerator pedal as a %**	In the event of a fault, consult the interpretation of parameter **PR022 Accelerator pedal position**.
11	Brake 1 solenoid valve current	**PR050:** Brake 1 *SV control current	**1000 mA**	In the event of a fault, consult the interpretation of fault **DF272 Brake 1 solenoid valve circuit**
12		**PR060:** Brake 1 solenoid valve return current	**1000 mA**	If there is a fault, consult the interpretation of fault **DF279 Brake 1 solenoid valve return current**

***SV: solenoid valve**

GETtheMANUALS.org

NOTES	Only check conformity after a **full check** with the diagnostic tool. The values shown in this conformity check are given as examples. **Application condition:** Engine stopped with ignition on, **ET012 Gear lever position** in position **P**.

TRANSMISSION:
DECLUTCHING WHEN STATIONARY (CONTINUED 2)

Order	Function	Parameter or Status checked or Action	Display and Notes	Fault finding
13	Clutch 1 solenoid valve current	**PR051:** Clutch 1 solenoid valve control current	**1000 mA**	In the event of a fault, consult the interpretation of fault **DF273 Clutch 1 solenoid valve circuit**.
14		**PR057:** Clutch 1 solenoid valve return current	**1000 mA**	If there is a fault, consult the interpretation of fault **DF276 Clutch 1 solenoid valve return current**.
15	Clutch 2 solenoid valve current	**PR055:** Clutch 2 solenoid valve control current	**1000 mA**	In the event of a fault, consult the interpretation of fault **DF274 Clutch 2 solenoid valve circuit**.
16		**PR058:** Clutch 2 solenoid valve return current	**1000 mA**	If there is a fault, consult the interpretation of fault **DF277 Clutch 2 solenoid valve return current**
17	Clutch 3 solenoid valve current	**PR056:** Clutch 3 solenoid valve control current	**1000 mA**	In the event of a fault, consult the interpretation of fault **DF275 Clutch 3 solenoid valve circuit**.
18		**PR059:** Clutch 3 solenoid valve return current	**1000 mA**	If there is a fault, consult the interpretation of fault **DF278 Clutch 1 solenoid valve return current**

GETtheMANUALS.org

NOTES	Only check conformity after a **full check** with the diagnostic tool. The values shown in this conformity check are given as examples. **Application condition:** Engine stopped with ignition on, **ET012 Gear lever position** in position **P**.

TRANSMISSION:
DECLUTCHING WHEN STATIONARY (CONTINUED 3)

Order	Function	Parameter or Status checked or Action	Display and Notes	Fault finding
19	Sequence solenoid valves control	**ET021:** Sequence solenoid valve 1 control	**INACTIVE**	Switch on the ignition, select position **N** (Neutral) and shift to position **M +/-** (Manual sequential). Check that status **ET021 Sequence solenoid valve 1 control** changes from status **INACTIVE** to **ACTIVE**. If there is a fault, consult the interpretation of fault **DF085 Sequence solenoid valve EVS1 circuit**.
20		**ET022:** Sequence solenoid valve 2 control	**INACTIVE**	Switch on the ignition, select position **N** (Neutral) and shift to position **M +/-** (Manual sequential). Check that status **ET022 Sequence solenoid valve 2 control** changes from status **INACTIVE** to **ACTIVE**. If there is a fault, consult the interpretation of fault **DF086 Sequence solenoid valve 2 circuit**.

GETtheMANUALS.org

NOTES	Only check conformity after a **full check** with the diagnostic tool. The values shown in this conformity check are given as examples. **Application condition: Engine stopped, ignition on.**

TRANSMISSION:
GEAR SHIFTS

Order	Function	Parameter or Status checked or Action	Display and Notes	Fault finding
1	Lever position	**ET012:** Gear lever position	**P:** lever in position P **R:** lever in position R **N:** lever in position N **D:** lever in position D **Intermediate:** Lever in intermediate position **Invalid:** gear lever in intermediate position (invalid) **STATUS1:** Gear lever in intermediate position (N/D) **STATUS2:** Gear lever in intermediate position (P/R) or (N/R)	In the event of a fault, consult the interpretation of fault **DF286 Lever position sensor signal**.
2	Gear	**ET013:** Gear engaged	**1:** Gear engaged: 1st **2:** Gear engaged: 2nd **3:** Gear engaged: 3rd **4:** Gear engaged: 4th **5:** Gear engaged: 5th **6:** Gear engaged: 6th **R:** Gear engaged: R **P/N:** Park/Neutral position **SAFE:** Safe mode **DECLUTCHED:** Declutching when stationary	In the event of a fault, consult the interpretation of fault **DF298 Gear shifts**.
3	Operating mode recognition	**ET050:** Operating mode recognition	**STATUS1:** Economy mode **STATUS2:** Sports mode **STATUS3:** Manual mode	**NONE**
4	Safe mode	**ET088:** Safe mode	**INACTIVE** **ACTIVE**	In the event of a fault, deal with any faults.

GETtheMANUALS.org

NOTES	Only check conformity after a **full check** with the diagnostic tool. The values shown in this conformity check are given as examples. **Application condition: Engine stopped, ignition on.**

TRANSMISSION:
GEAR SHIFTS (CONTINUED 1)

Order	Function	Parameter or Status checked or Action	Display and Notes	Fault finding
5	Gear change	**ET251:** Gear change	**AUTHORISED** **REJECTED** **IN PROGRESS**	If there is a fault, run a multiplex network test, consult the interpretation of faults: **– DF286 Lever position sensor signal,** **– DF287 Gearbox output speed signal,** **– DF251 Gearbox input speed**.
6	Sequence solenoid valves control	**ET021:** Sequence solenoid valve 1 control	**INACTIVE**	If there is a fault, consult the interpretation of fault **DF085 Sequence solenoid valve EVS1 circuit**.
7	Sequence solenoid valves control	**ET022:** Sequence solenoid valve 2 control	**INACTIVE**	If there is a fault, consult the interpretation of fault **DF086 EVS 2 circuit**.
8	Downshift request	**ET086:** Downshift request	**INACTIVE**	In the event of a fault, consult the interpretation of parameter **PR022 Accelerator pedal position**.
9	Gear shift strategy	**ET072:** Gear shift strategy	**STATUS1:** Starting mode	If there is a fault, contact the Techline
10	Brake switch	**ET037:** Brake switch signal	**Released** **Depressed** **Invalid**	In the event of a fault, consult the interpretation of status **ET037 Brake switch signal**.

GETtheMANUALS.org

NOTES	Only check conformity after a **full check** with the diagnostic tool. The values shown in this conformity check are given as examples. **Application condition: Engine stopped, ignition on.**

TRANSMISSION:
GEAR SHIFTS (CONTINUED 2)

Order	Function	Parameter or Status checked or Action	Display and Notes	Fault finding
11	Coolant temperature	**PR001:** Coolant temperature	Indicates the engine **coolant temperature in °C**	In the event of a fault, refer to the interpretation of parameter **PR001 Coolant temperature**.
12	Engine speed	**PR006:** Engine speed	Indicates the engine speed **0 rpm**	In the event of a fault, consult the interpretation of parameter **PR006 Engine speed**.
13	Vehicle speed	**PR105:** Vehicle speed	Indicates the vehicle speed **0 mph or km/h**	If there is a fault, consult the interpretation of fault **DF185 No ABS/ESP multiplex signal**.
14	Gearbox speed	**PR005:** Gearbox output speed	Indicates the gearbox output speed **0 rpm**	In the event of a fault, consult the interpretation of fault **DF287 Gearbox output speed signal**.
15		**PR014:** Gearbox input speed	**0 rpm**	In the event of a fault, consult the interpretation of fault **DF251 Gearbox input speed**.
16	Effective engine torque	**PR106:** Effective engine torque	**- 100 Nm**	If there is a fault, carry out fault finding on the injection system (See **13B, diesel injection**).
17	Accelerator pedal	**PR022:** Accelerator pedal position	Indicates the position of the accelerator pedal **as a %**	In the event of a fault, consult the interpretation of parameter **PR022 Accelerator pedal position**.

GETtheMANUALS.org

NOTES	Only check conformity after a **full check** with the diagnostic tool. The values shown in this conformity check are given as examples. **Application condition: Engine stopped, ignition on.**

TRANSMISSION:
GEAR SHIFTS (CONTINUED 3)

Order	Function	Parameter or Status checked or Action		Display and Notes	Fault finding
18	Brake 1 solenoid valve current	**PR050:**	Brake 1 *SV control current	**1000 mA**	In the event of a fault, consult the interpretation of fault **DF272 Brake 1 solenoid valve circuit**.
19		**PR060:**	Brake 1 solenoid valve return current	**1000 mA**	If there is a fault, consult the interpretation of fault **DF279 Brake 1 solenoid valve return current**.
20		**PR057:**	Clutch 1 solenoid valve return current	**1000 mA**	If there is a fault, consult the interpretation of fault **DF276 Clutch 1 solenoid valve return current**.
21	Clutch 2 solenoid valve current	**PR055:**	Clutch 2 solenoid valve control current	**1000 mA**	In the event of a fault, consult the interpretation of fault **DF274 Clutch 2 solenoid valve circuit**.
22		**PR058:**	Clutch 2 solenoid valve return current	**1000 mA**	If there is a fault, consult the interpretation of fault **DF277 Clutch 2 solenoid valve return current**
23	Clutch 3 solenoid valve current	**PR056:**	Clutch 3 solenoid valve control current	**1000 mA**	In the event of a fault, consult the interpretation of fault **DF275 Clutch 3 solenoid valve circuit**.
24		**PR059:**	Clutch 3 solenoid valve return current	**1000 mA**	If there is a fault, consult the interpretation of fault **DF278 Clutch 1 solenoid valve return current**.

***SV: solenoid valve**

GETtheMANUALS.org

NOTES	Only check conformity after a **full check** with the diagnostic tool. The values shown in this conformity check are given as examples. **Application condition: Engine stopped, ignition on.**

TRANSMISSION:
TORQUE CONTROL

Order	Function	Parameter or Status checked or Action		Display and Notes	Fault finding
1	Torque converter	**ET071:**	Torque converter	**OPEN**	In the event of a fault, refer to the interpretation of faults **– DF090 Converter lockup solenoid valve circuit, – DF097 Converter lockup, – DF281 Converter lockup solenoid valve return current**
2	Torque	**PR106:**	Effective engine torque	**- 100 Nm**	If there is a fault, carry out fault finding on the injection system (See **13B, diesel injection**).
3		**PR107:**	No reduction engine torque	**- 100 Nm**	
4		**PR153:**	Slow torque setpoint	**408 Nm**	If there is a fault, consult the interpretation of fault **DF289 No automatic transmission multiplex signal**.
5		**PR154:**	Rapid torque setpoint	**- 100 Nm**	
6	Accelerator pedal	**PR022:**	Accelerator pedal position	**Indicates the position of the accelerator pedal as a %**	In the event of a fault, consult the interpretation of parameter **PR022 Accelerator pedal position**.

***SV: solenoid valve**

GETtheMANUALS.org

NOTES	Only check conformity after a **full check** with the diagnostic tool. The values shown in this conformity check are given as examples. **Application condition: Engine stopped, ignition on.**

TRANSMISSION:
TORQUE CONTROL (CONTINUED 1)

Order	Function	Parameter or Status checked or Action		Display and Notes	Fault finding
7	Converter lockup *SV current	**PR108:**	Converter lockup solenoid valve current	**200 mA**	Carry out a road test, making sure that status **ET038 Converter lockup solenoid valve CTRL** changes status from **INACTIVE** to **ACTIVE**. If there is a fault, consult the interpretation of fault **DF090 Converter lockup solenoid valve circuit**.
8	Converter lockup *SV return current	**PR061:**	Converter lockup solenoid valve return current	**200 mA**	Carry out a road test, making sure that status **ET038 Converter lockup solenoid valve CTRL** changes status from **INACTIVE** to **ACTIVE**. If there is a fault, consult the interpretation of fault **DF281 Solenoid valve lockup solenoid valve return current**.

***SV: solenoid valve**

GETtheMANUALS.org

NOTES	Only check conformity after a **full check** with the diagnostic tool. The values shown in this conformity check are given as examples. **Application condition: Engine stopped, ignition on.**

TRANSMISSION:
TORQUE CONTROL (CONTINUED 2)

Order	Function	Parameter or Status checked or Action		Display and Notes	Fault finding
9	LT pressure regulation *SV current	**PR110:**	LT pressure regulation solenoid valve circuit	**1000 mA**	If there is a fault, consult the interpretation of fault **DF092 LT pressure regulation solenoid valve circuit**
10	LT pressure regulation solenoid valve return current	**PR062:**	LT pressure regulation solenoid valve current	**1000 mA**	If there is a fault, consult the interpretation of fault **DF280 LT pressure regulation solenoid valve circuit**

***SV: solenoid valve**

GETtheMANUALS.org

NOTES	Only check conformity after a **full check** with the diagnostic tool. The values shown in this conformity check are given as examples. **Application condition: Engine stopped, ignition on.**

TRANSMISSION:
SELECTION LEVER LOCK

Order	Function	Parameter or Status checked or Action	Display and Notes	Fault finding
1	Lever position	**ET012:** Gear lever position	**P:** lever in position P **R:** lever in position R **N:** lever in position N **D:** lever in position D **Intermediate:** Lever in intermediate position **Invalid:** gear lever in intermediate position (invalid) **STATUS1:** Gear lever in intermediate position (N/D) **STATUS2:** Gear lever in intermediate position (P/R) or (N/R)	In the event of a fault, consult the interpretation of fault **DF286 Lever position sensor signal**.
2	Lever lock	**ET074:** Selector lever lock control	**INACTIVE**	If there is a fault, consult the interpretation of fault **DF095 Selector lever locking electromagnet circuit**.
3	Brake switch	**ET037:** Brake switch signal	**RELEASED** **PRESSED** **INVALID**	In the event of a fault, consult the interpretation of status **ET037 Brake switch signal**.

GETtheMANUALS.org

NOTES	Only check conformity after a **full check** with the diagnostic tool. The values shown in this conformity check are given as examples. **Application condition: Engine stopped, ignition on.**

TRANSMISSION:
DRIVER PARAMETERS

Order	Function	Parameter or Status checked or Action		Display and Notes	Fault finding
1	Fault warning light	**ET084:**	Fault warning light lit	**NO** **YES**	In the event of a fault, consult the interpretation of status **ET084 Instrument panel warning light**.
2	Lever position	**ET012:**	Gear lever position	**P:** lever in position P **R:** lever in position R **N:** lever in position N **D:** lever in position D **Intermediate:** Lever in intermediate position **Invalid:** gear lever in intermediate position (invalid) **STATUS1:** Gear lever in intermediate position (N/D) **STATUS2:** Gear lever in intermediate position (P/R) or (N/R)	In the event of a fault, consult the interpretation of fault **DF286 Lever position sensor signal**.
3	Operating mode recognition	**ET050:**	Operating mode recognition	**STATUS1:** Economy mode **STATUS2:** Sports mode **STATUS3:** Manual mode	**NONE**
4	Safe mode	**ET088:**	Safe mode	**INACTIVE** **ACTIVE**	In the event of a fault, deal with any faults.
5	Downshift request	**ET086:**	Downshift request	**INACTIVE**	In the event of a fault, consult the interpretation of parameter **PR022 Accelerator pedal position**.
6	Gear shift strategy	**ET072:**	Gear shift strategy	**STATUS1:** Starting mode	If there is a fault, contact the Techline

GETtheMANUALS.org

NOTES	Only check conformity after a **full check** with the diagnostic tool. The values shown in this conformity check are given as examples. **Application condition: Engine stopped, ignition on.**

TRANSMISSION:
DRIVER PARAMETERS (continued)

Order	Function	Parameter or Status checked or Action	Display and Notes	Fault finding
7	Brake switch	**ET037:** Brake switch signal	**RELEASED** **PRESSED** **INVALID**	In the event of a fault, consult the interpretation of status **ET037 Brake switch signal**.
8	Accelerator pedal	**PR022:** Accelerator pedal position	**Indicates the position of the accelerator pedal as a %**	In the event of a fault, consult the interpretation of parameter **PR022 Accelerator pedal position**.

GETtheMANUALS.org

NOTES	Only check conformity after a **full check** with the diagnostic tool. The values shown in this conformity check are given as examples. **Test conditions: Engine idling.**

TRANSMISSION:
IDLING CREEP

Order	Function	Parameter or Status checked or Action	Display and Notes	Fault finding
1	Torque converter	**ET071:** Torque converter	**OPEN**	In the event of a fault, refer to the interpretation of the fault: **– DF090 Converter lockup solenoid valve circuit,** **– DF097 Converter lockup,** **– DF281 Converter lockup solenoid valve return current**.
2	Lever position	**ET012:** Gear lever position	**P:** lever in position P **R:** lever in position R **N:** lever in position N **D:** lever in position D **Intermediate:** Lever in intermediate position **Invalid:** gear lever in intermediate position (invalid) **STATUS1:** Gear lever in intermediate position (N/D) **STATUS2:** Gear lever in intermediate position (P/R) or (N/R)	In the event of a fault, consult the interpretation of fault **DF286 Lever position sensor signal**.
3	Gear engaged	**ET013:** Gear engaged	**1:** Gear engaged: 1st **2:** Gear engaged: 2nd **3:** Gear engaged: 3rd **4:** Gear engaged: 4th **5:** Gear engaged: 5th **6:** Gear engaged: 6th **R:** Gear engaged: R **P/N:** Park/Neutral position **SAFE:** Safe mode **DECLUTCHED:** Declutching when stationary	In the event of a fault, consult the interpretation of fault **DF298 Gear shifts**.

GETtheMANUALS.org

NOTES	Only check conformity after a **full check** with the diagnostic tool. The values shown in this conformity check are given as examples. **Test conditions: Engine idling.**

TRANSMISSION:
IDLING CREEP (CONTINUED 1)

Order	Function	Parameter or Status checked or Action	Display and Notes	Fault finding
4	Operating mode recognition	**ET050:** Operating mode recognition	**STATUS1:** Economy mode **STATUS2:** Sports mode **STATUS3:** Manual mode	**NONE**
5	Safe mode	**ET088:** Safe mode	**INACTIVE** **ACTIVE**	In the event of a fault, deal with any faults.
6	Gear change	**ET251:** Gear change	**AUTHORISED** **REJECTED** **IN PROGRESS**	If there is a fault, run a multiplex network test, consult the interpretation of faults: **– DF286 Lever position sensor signal,** **– DF287 Gearbox output speed signal,** **– DF251 Gearbox input speed**.
7	Sequence solenoid valves control	**ET021:** Sequence solenoid valve 1 control	**INACTIVE**	If there is a fault, run command **AC002 Sequence solenoid valve 1**, if the command result is not conclusive, consult the interpretation of fault **DF085 sequence solenoid valve 1 circuit**.
8		**ET022:** Sequence solenoid valve 2 control	**INACTIVE**	If there is a fault, run command **AC003 Sequence solenoid valve 1**, if the command result is not conclusive, consult the interpretation of fault **DF086 Sequence solenoid valve 2 circuit**.

GETtheMANUALS.org

NOTES	Only check conformity after a **full check** with the diagnostic tool. The values shown in this conformity check are given as examples. **Test conditions: Engine idling.**

TRANSMISSION:
IDLING CREEP (CONTINUED 2)

Order	Function	Parameter or Status checked or Action		Display and Notes	Fault finding
9	Downshift request	**ET086:**	Downshift request	**INACTIVE**	In the event of a fault, consult the interpretation of parameter **PR022 Accelerator pedal position**.
10	Converter lockup solenoid valve	**ET038:**	*Converter lockup solenoid valve CTRL	**INACTIVE**	If there is a fault, consult the interpretation of fault **DF090 Converter lockup solenoid valve circuit**.
11	Gear shift strategy	**ET072:**	Gear shift strategy	**STATUS1:** Starting mode	If there is a fault, contact the Techline
12	Brake switch	**ET037:**	Brake switch signal	**RELEASED** **PRESSED** **INVALID**	In the event of a fault, consult the interpretation of status **ET037 Brake switch signal**.
13	Engine speed	**PR006:**	Engine speed	**700 rpm**	In the event of a fault, consult the interpretation of parameter **PR006 Engine speed**.
14	Vehicle speed	**PR105:**	Vehicle speed	**0 mph or km/h**	If there is a fault, consult the interpretation of fault **DF185 No ABS/ESP multiplex signal**.

***CTRL: control**

GETtheMANUALS.org

NOTES	Only check conformity after a **full check** with the diagnostic tool. The values shown in this conformity check are given as examples. **Test conditions: Engine idling.**

TRANSMISSION:
IDLING CREEP (CONTINUED 3)

Order	Function	Parameter or Status checked or Action	Display and Notes	Fault finding
15	Gearbox speed	**PR005:** Gearbox output speed	**0 rpm**	In the event of a fault, consult the interpretation of fault **DF287 Gearbox output speed signal**.
16		**PR014:** Gearbox input speed	**575 rpm**	In the event of a fault, consult the interpretation of fault **DF251 Gearbox input speed**.
17	Effective engine torque	**PR106:** Effective engine torque	**54 Nm**	If there is a fault, carry out fault finding on the injection system (See **13B, diesel injection**).
18	Accelerator pedal	**PR022:** Accelerator pedal position	**Indicates the position of the accelerator pedal as a %**	In the event of a fault, consult the interpretation of parameter **PR022 Accelerator pedal position**.
20	LT pressure regulation *SV current	**PR110:** LT pressure regulation solenoid valve current	**970 mA**	If there is a fault, consult the interpretation of fault **DF092 LT pressure regulation solenoid valve circuit**
21	LT pressure regulation solenoid valve return current	**PR062:** LT pressure regulation solenoid valve current	**970 mA**	If there is a fault, consult the interpretation of fault **DF280 LT pressure regulation solenoid valve circuit**

***SV: solenoid valve**

GETtheMANUALS.org

Tool status	Diagnostic tool title
ET010	Oil too hot signal
ET012	Gear lever position
ET013	Gear engaged
ET021	Sequence solenoid 1 control
ET022	Sequence solenoid 2 control
ET037	Brake switch signal
ET038	Converter lockup solenoid valve CTRL
ET050	Operating mode recognition
ET068	Air conditioning authorisation
ET071	Torque converter
ET072	Gear shift strategy
ET084	Fault warning light lit
ET086	Downshift request
ET088	Safe mode
ET251	Gear change
ET252	Fan unit request by automatic transmission

GETtheMANUALS.org

ET010	OIL TOO HOT SIGNAL

NOTES	**Special notes:** This status indicates that the gearbox oil temperature is too hot. Under normal operation conditions, status **ET010 Oil too hot signal** should be **NO**.

If status **ET010 Oil too hot signal** is **YES**.
Check the level (with engine running) (see **MR 402 mechanics, 23A, automatic transmission, oil change**), and check parameter **PR004 "Gearbox oil temperature"**; if resistance values are inconsistent, replace the temperature sensor.

If the fault is still present, contact Techline.

AFTER REPAIR	Carry out a road test, then check with the diagnostic tool.

GETtheMANUALS.org

ET037	BRAKE SWITCH SIGNAL

NOTES	**Special notes:** Apply the conformity check to see if the statuses are consistent with the operating programs of the system.

DEPRESSED (Brake pedal depressed)

If brake lights operate:
– The **continuity and absence of interference resistance** of the following connection:

Injection computer **track A21** ⟶ **track 3**, brake light switch black connector

	Continuity between tracks	insulation between tracks
Brake pedal depressed	**1 and 2**	**3 and 4**
Brake pedal released	**3 and 4**	**1 and 2**

Repair if necessary.

If the brake lights do not operate:
– Check the condition and fitting of the **brake lights connector** and the **brake lights fuse**.
– Check for **+ after ignition feed** on **tracks 2** and **4** of the **brake light switch**.
– Then remove the **brake light switch**, and carry out the checks in the table below:
If the checks are not in order, replace the brake light switch.

AFTER REPAIR	Carry out a road test, then check with the diagnostic tool.

GETtheMANUALS.org

ET037 **CONTINUED**	

NOTES	**Special notes:** Apply the conformity check to see if the statuses are consistent with the operating programs of the system.

RELEASED (Brake pedal released)

– Check the condition and fitting of the **brake lights connector** and the brake lights fuse.
– Then remove the **brake light switch**, and carry out the checks in the table below:

	Continuity between tracks	insulation between tracks
Brake pedal depressed	**1 and 2**	**3 and 4**
Brake pedal released	**3 and 4**	**1 and 2**

If the checks are not in order, replace the brake light switch.

AFTER REPAIR	Carry out a road test, then check with the diagnostic tool.

GETtheMANUALS.org

ET074	SELECTOR LEVER LOCK CONTROL

NOTES	**Special notes:** If the control is Inactive, the lever is locked. Status **ET074 Lever lock control** becomes active after the **+ after ignition feed** is activated and the brake pedal depressed; only then is lever movement authorised.

In the event of a fault, test the multiplex network.

Consult the interpretation of status **ET037 Brake switch signal**.

Consult the interpretation of fault **DF095 Selection locking electromagnet circuit**.

AFTER REPAIR	Carry out a road test, then check with the diagnostic tool.

GETtheMANUALS.org

ET084	FAULT WARNING LIGHT LIT

NOTES	**Special notes:** This status indicates the presence of an automatic transmission system malfunction. Under normal operating conditions status **ET084 Fault warning light lit** should be **NO**.

If status **ET084 Fault warning light lit** is **YES**:
Carry out a fault check on the system. If there are no faults, carry out fault finding on the instrument panel system (see **83A, Instrument panel**).

AFTER REPAIR	Carry out a road test, then check with the diagnostic tool.

GETtheMANUALS.org

Tool parameter	Diagnostic tool title
PR001	Coolant temperature
PR004	Gearbox oil temperature
PR005	Gearbox output speed
PR006	Engine speed
PR008	Computer feed voltage
PR014	Gearbox input speed
PR022	Accelerator pedal position
PR050	Brake 1 *SV control current
PR051	Clutch 1 solenoid valve control current
PR055	Clutch 2 solenoid valve control current
PR056	Clutch 3 solenoid valve control current
PR057	Clutch 1 solenoid valve return current
PR058	Clutch 2 solenoid valve return current
PR059	Clutch 3 solenoid valve return current
PR060	Brake 1 return current
PR061	Converter lockup solenoid valve return current
PR062	LT pressure regulation solenoid valve return current
PR105	Vehicle speed
PR106	Effective engine torque
PR107	No reduction engine torque
PR108	Converter lockup solenoid valve current
PR110	LT pressure regulation solenoid valve current
PR153	Slow torque setpoint
PR154	Rapid torque setpoint

***SV: solenoid valve**

GETtheMANUALS.org

PR001	COOLANT TEMPERATURE

NOTES	**Special notes:** There must be no present or stored faults. Perform this fault finding procedure: – After finding an inconsistency in the parameter, – after a customer complaint (Lack of power).

Run a multiplex network test (see **88B, Multiplex**).

ELECTRICAL CONFORMITY OF SENSOR

Check the continuity and the absence of interference resistance on the following connections:

Engine management computer, **track B95** → **track 2**, coolant temperature sensor connector

Engine management computer, **track B99** → **track 1**, coolant temperature sensor connector

Repair if necessary.

Measure the resistance of the coolant temperature sensor between tracks 1 and 2 of its connector.
Replace the sensor if the resistance is not:

at - 10 °C: **16,120 Ω ± 806 Ω**
at 25 °C: **2795 Ω ± 140 Ω**
at 50 °C: **980 Ω ± 49 Ω**
at 80 °C: **334 Ω ± 17 Ω**

AFTER REPAIR	Deal with any faults displayed by the diagnostic tool. Clear the computer memory. Carry out a road test, then check with the diagnostic tool.

GETtheMANUALS.org

PR004	GEARBOX OIL TEMPERATURE

NOTES	**Special notes:** Only apply the checks if the parameter is inconsistent.

The gearbox oil temperature value for normal operation should be less than 140 °C.

In the event of a fault, consult the interpretation of fault **DF284 Gearbox oil temperature**.

AFTER REPAIR	Deal with any faults displayed by the diagnostic tool. Clear the computer memory. Carry out a road test, then check with the diagnostic tool.

GETtheMANUALS.org

PR014	GEARBOX INPUT SPEED

NOTES	**There must be no present or stored faults.** Perform this fault finding procedure: – After finding an inconsistency in the parameter, – after a customer complaint (Gear shift inconsistent).

With the engine running, parameter **PR006 Engine speed ≈ 700 rpm**:
PR110 Gearbox input speed should be ≈ **575 rpm**

In the event of a fault, consult the interpretation of fault **DF251 Gearbox input speed**.

AFTER REPAIR	Deal with any faults displayed by the diagnostic tool. Clear the computer memory. Carry out a road test, then check with the diagnostic tool.

GETtheMANUALS.org

PR022	ACCELERATOR PEDAL POSITION

NOTES	**There must be no present or stored faults.** Perform this fault finding procedure: – After finding an inconsistency in the parameter, – after a customer complaint (Gear jump, gear shift inconsistency).

Run a multiplex network test (see **88B, Multiplex**).

If there is a fault, carry out fault finding on the injection system (See **13B, diesel injection**).

AFTER REPAIR	Deal with any faults displayed by the diagnostic tool. Clear the computer memory. Carry out a road test, then check with the diagnostic tool.

GETtheMANUALS.org

PR050	BRAKE 1 SOLENOID VALVE CONTROL CURRENT

NOTES	**There must be no present or stored faults.** Perform this fault finding procedure: – After finding an inconsistency in the parameter, – after a customer complaint (Gear shift or one or more gears missing).

With ignition on, engine stopped and status **ET013 "Gear engaged" P/N**:
PR050 Brake 1 solenoid valve control current should be: **1000 mA**

In the event of a fault, consult the interpretation of fault **DF272 Brake 1 SV solenoid valve circuit**.

AFTER REPAIR	Deal with any faults displayed by the diagnostic tool. Clear the computer memory. Carry out a road test, then check with the diagnostic tool.

GETtheMANUALS.org

PR051	CLUTCH 1 SOLENOID VALVE CONTROL CURRENT

NOTES	**There must be no present or stored faults.** Perform this fault finding procedure: – After finding an inconsistency in the parameter, – after a customer complaint (Gear shift or one or more gears missing).

With ignition on, engine stopped and status **ET013 "Gear engaged" P/N**:
PR051 Clutch 1 solenoid valve control current should be: **1000 mA**

In the event of a fault consult the interpretation of fault **DF273 Clutch 1 solenoid valve circuit**.

AFTER REPAIR	Deal with any faults displayed by the diagnostic tool. Clear the computer memory. Carry out a road test, then check with the diagnostic tool.

GETtheMANUALS.org

PR055	CLUTCH 2 SOLENOID VALVE CONTROL CURRENT

NOTES	**There must be no present or stored faults.** Perform this fault finding procedure: – After finding an inconsistency in the parameter, – after a customer complaint (Gear shift or one or more gears missing).

With ignition on, engine stopped and status **ET013 "Gear engaged" P/N**:
PR055 Clutch 2 solenoid valve control current should be: **1000 mA**

In the event of a fault consult the interpretation of fault **DF274 Clutch 2 solenoid valve circuit**.

AFTER REPAIR	Deal with any faults displayed by the diagnostic tool. Clear the computer memory. Carry out a road test, then check with the diagnostic tool.

GETtheMANUALS.org

PR056	CLUTCH 3 SOLENOID VALVE CONTROL CURRENT

NOTES	**There must be no present or stored faults.** Perform this fault finding procedure: – After finding an inconsistency in the parameter, – after a customer complaint (Gear shift or one or more gears missing).

With ignition on, engine stopped and status **ET013 "Gear engaged" P/N**:
PR056 Clutch 3 solenoid valve control current should be: **1000 mA**

In the event of a fault, consult the interpretation of fault **DF275 Clutch 3 solenoid valve circuit**.

AFTER REPAIR	Deal with any faults displayed by the diagnostic tool. Clear the computer memory. Carry out a road test, then check with the diagnostic tool.

GETtheMANUALS.org

PR057	CLUTCH 1 SOLENOID VALVE RETURN CURRENT

NOTES	**There must be no present or stored faults.** Perform this fault finding procedure: – After finding an inconsistency in the parameter, – after a customer complaint (Gear shift or one or more gears missing).

With ignition on, engine stopped and status **ET013 "Gear engaged" P/N**:
PR057 Clutch 1 solenoid valve return current should be: **1000 mA**

In the event of a fault consult the interpretation of fault **DF273 Clutch 1 solenoid valve circuit**.

AFTER REPAIR	Deal with any faults displayed by the diagnostic tool. Clear the computer memory. Carry out a road test, then check with the diagnostic tool.

GETtheMANUALS.org

PR058	CLUTCH 2 SOLENOID VALVE RETURN CURRENT

NOTES	**There must be no present or stored faults.** Perform this fault finding procedure: – After finding an inconsistency in the parameter, – after a customer complaint (Gear shift or one or more gears missing).

With ignition on, engine stopped and status **ET013 "Gear engaged" P/N**:
PR058 Clutch 2 solenoid valve return current should be: **1000 mA**

In the event of a fault consult the interpretation of fault **DF274 Clutch 2 solenoid valve circuit**.

AFTER REPAIR	Deal with any faults displayed by the diagnostic tool. Clear the computer memory. Carry out a road test, then check with the diagnostic tool.

GETtheMANUALS.org

PR059	CLUTCH 3 SOLENOID VALVE RETURN CURRENT

NOTES	**There must be no present or stored faults.** Perform this fault finding procedure: – After finding an inconsistency in the parameter, – after a customer complaint (Gear shift or one or more gears missing).

With ignition on, engine stopped and status **ET013 "Gear engaged" P/N**:
PR059 Clutch 3 solenoid valve return current should be: **1000 mA**

In the event of a fault, consult the interpretation of fault **DF275 Clutch 3 solenoid valve circuit**.

AFTER REPAIR	Deal with any faults displayed by the diagnostic tool. Clear the computer memory. Carry out a road test, then check with the diagnostic tool.

GETtheMANUALS.org

PR060	BRAKE 1 SOLENOID VALVE CONTROL CURRENT

NOTES	**There must be no present or stored faults.** Perform this fault finding procedure: – After finding an inconsistency in the parameter, – after a customer complaint (Gear shift or one or more gears missing).

With ignition on, engine stopped and status **ET013 "Gear engaged" P/N**:
PR060 Brake 1 solenoid valve return current should be: **1000 mA**

In the event of a fault, consult the interpretation of fault **DF272 Brake 1 solenoid valve return circuit**.

AFTER REPAIR	Deal with any faults displayed by the diagnostic tool. Clear the computer memory. Carry out a road test, then check with the diagnostic tool.

GETtheMANUALS.org

PR061	CONVERTER LOCKUP SOLENOID VALVE RETURN CURRENT

NOTES	**There must be no present or stored faults.** Perform this fault finding procedure: – After finding an inconsistency in the parameter, – after a customer complaint.

With ignition on, engine stopped and status **ET013 "Gear engaged" P/N**:
PR061 Converter lockup solenoid valve return current should be: **200 mA**

If there is a fault consult the interpretation of fault **DF090 Converter lockup solenoid valve circuit**.

AFTER REPAIR	Deal with any faults displayed by the diagnostic tool. Clear the computer memory. Carry out a road test, then check with the diagnostic tool.

GETtheMANUALS.org

PR062	LT PRESSURE REGULATION SOLENOID VALVE RETURN CURRENT

NOTES	**There must be no present or stored faults.** Perform this fault finding procedure: – After finding an inconsistency in the parameter, – after a customer complaint (Jerking, gear shift or one or more gears missing).

With ignition on, engine stopped and status **ET013 "Gear engaged" P/N**:
PR062 LT pressure regulation solenoid valve return current should be: **1000 mA**

If there is a fault consult the interpretation of fault **DF092 LT pressure regulation solenoid valve circuit**.

AFTER REPAIR	Deal with any faults displayed by the diagnostic tool. Clear the computer memory. Carry out a road test, then check with the diagnostic tool.

GETtheMANUALS.org

PR108	CONVERTER LOCKUP SOLENOID VALVE CURRENT

NOTES	**There must be no present or stored faults.** Perform this fault finding procedure: – After finding an inconsistency in the parameter, – after a customer complaint.

With ignition on, engine stopped and status **ET013 "Gear engaged" P/N**:
PR108 Converter lockup solenoid valve return current should be: **200 mA**

If there is a fault consult the interpretation of fault **DF090 Converter lockup solenoid valve circuit**.

AFTER REPAIR	Deal with any faults displayed by the diagnostic tool. Clear the computer memory. Carry out a road test, then check with the diagnostic tool.

GETtheMANUALS.org

COMMANDS	Diagnostic tool title
AC002	Sequence solenoid 1
AC003	Sequence solenoid 2
AC024	Sequential actuator control
AC026	Clutch 1 solenoid valve
AC029	Clutch 2 solenoid valve
AC030	Clutch 3 solenoid valve
AC031	Brake 1 solenoid valve
AC085	Converter lockup solenoid valve
AC087	LT pressure regulation solenoid valve
AC088	Selector lever locking electromagnet
AC094	Reversing lights

GETtheMANUALS.org

NOTES	**Special note:** Only consult this customer complaint after a complete check using the diagnostic tool and a conformity check.

NO DIALOGUE WITH THE TOOL

- **No dialogue with the computer** **ALP1**

ENGINE STARTING PROBLEMS

- **The starter is not actuated when the selector lever is in position P and/or N** **ALP2**
- **The starter does not drive the engine, with the selector lever in position P or N** **ALP3**
- **The vehicle moves forwards or backwards with the selector lever in position N** **ALP4**

GEAR CHANGE PROBLEM

- **Erratic gear change in D** **ALP5**
- **Erratic gear change in manual mode** **ALP6**

GETtheMANUALS.org

ALP1	No dialogue with the computer

NOTES	**Special notes:** Only consult this customer complaint after running a check with the diagnostic tool on the multiplex network.

Make sure that the vehicle + after ignition feed is activated.
Check that the tool is not the cause of the fault, by attempting dialogue with a different system (UCH, Injection, etc.) on the same vehicle or another vehicle.
Carry out another multiplex network test on the vehicle using the diagnostic tool:
Is the automatic transmission computer recognised?

Yes

Establish communication with the automatic transmission computer.

Communication successful at first attempt?

Yes → End of fault finding

No

Identification screen displayed after three attempts?

No

Check that the computer connector is properly connected and check the condition of its connections.
Check for the automatic transmission supply fuse on the passenger compartment connection unit, and its condition.
Check the battery voltage:

9.5 V < battery voltage < **15.5 V**

Perform the operations required to obtain a correct voltage: Carry out a complete battery and charge circuit check (see **Technical Note 6014A, Charge circuit fault finding**).

Check the automatic transmission earths.
Check the computer supply:
Earth on tracks 9 and 10 of the computer 16 track connector.
+ after ignition feed on track 11 of the computer 16 track connector.

Carry out a multiplex network test. If the computer still does not respond, contact the Techline.

AFTER REPAIR	Deal with any faults displayed by the diagnostic tool. Clear the computer memory. Carry out a road test, then check with the diagnostic tool.

GETtheMANUALS.org

ALP2	The starter is not actuated when the selector lever is in position P and/or N

NOTES	**Special notes:** There must be no present or stored electrical faults. Only consult this customer complaint after a check using the diagnostic tool and a conformity check.

Apply this ALP after a complete check on the ignition circuit.

Check the battery voltage:

9.5 V < battery voltage < **15.5 V**

Perform the operations required to obtain a correct voltage: Carry out a complete battery and charge circuit check (see **Technical Note 6014A, Charge circuit fault finding**).

Carry out fault finding on the injection computer (see **13B, Diesel injection**) and deal with the various faults displayed on the diagnostic tool, if necessary.
Apply the customer complaints declared in the note if the cause is still present.

Connect the diagnostic tool to the vehicle and establish dialogue with the automatic transmission computer.
Check statuses **ET012 Gear lever position** and **ET013 Gear engaged**: check the consistency between the display on the tool and the selector lever locked positions (ignition on and engine stopped): P or N.

Are they consistent?

No

Check that the selection cable is correctly positioned and mounted on the lever position sensor, located on the computer and in the passenger compartment.
If necessary, program the neutral position N using command **VP018 Program neutral position**.

Run the starter motor:
Is the starter actuated?

Yes

Contact the Techline.

No

Yes

End of fault finding

GETtheMANUALS.org

ALP3	The starter drives the engine, with the selector lever in a position other than P or N

NOTES	**Special notes:** There must be no present or stored faults. Only consult this customer complaint after a check using the diagnostic tool and a conformity check.

Connect the diagnostic tool to the vehicle and establish dialogue with the automatic transmission computer. Check statuses **ET012 Gear lever position** and **ET013 Gear engaged**: check the consistency between the display on the tool and the locked positions of the selector lever on the gear selector bridge piece (with ignition on and engine stopped): P or N

Are they consistent?

No

Check the selector cable setting and that the selector lever is correctly positioned on the lever position sensor, located in the computer (see **MR 402, Mechanics, 23A, automatic transmission, selection cable adjustment**).
If necessary, program the neutral position N using command **VP018 Program neutral position**.

If the fault is still present, contact the Techline.

End of fault finding procedure.
Incorrect interpretation of customer complaint.

GETtheMANUALS.org

ALP4	The vehicle moves forwards or backwards with the selector lever in position N

NOTES	**Special notes:** There must be no present or stored electrical faults. Only consult this customer complaint after a check using the diagnostic tool and a conformity check.

Connect the diagnostic tool to the vehicle and establish dialogue with the automatic transmission computer. Check statuses **ET012 Gear lever position** and **ET013 Gear engaged**: check the consistency between the display on the tool and the locked positions of the selector lever on the gear selector bridge piece (with ignition on and engine stopped).

Are they consistent?

No

Check the selector cable setting, and that the selector lever is correctly positioned on the lever position sensor, located on the computer.
If necessary, program the neutral position N using command **VP018 Program neutral position**.

Carry out a test on the gear selector.

Is there consistency?

No

Contact the Techline, to confirm changing the automatic transmission.

Yes

End of fault finding procedure.

Yes

Check the gearbox oil condition and level (Smell of burning, colour).

Does the condition of the oil suggest there is an internal fault with the automatic transmission?

Yes

Contact the Techline, to confirm changing the automatic transmission.

No

End of fault finding. Review the cause against the customer complaint.

GETtheMANUALS.org

ALP5	Erratic gear changes in D

NOTES	**Special notes:** There must be no present or stored electrical faults. Only consult this customer complaint after a check using the diagnostic tool and a conformity check.

Connect the diagnostic tool to the vehicle and establish dialogue with the automatic transmission computer.
Check statuses **ET012 Gear lever position** and **ET013 Gear engaged**: check the consistency between the display on the tool for these 2 statuses, with the vehicle in motion, position D.

Are they consistent?

yes

Check the gearbox oil condition and level (Smell of burning, colour).

Does the condition of the oil suggest there is an internal fault with the automatic transmission?

Yes

Contact the Techline, to confirm changing the automatic transmission.

No

End of fault finding procedure. Review the cause against the customer complaint.

No

Check the selector cable setting, and that the selector lever is correctly positioned on the lever position sensor, located on the computer.
If necessary, program the neutral position N using command **VP018 Program neutral position**.

Check the consistency of parameter **PR022 Accelerator pedal position**.

If inconsistent

Contact the Techline, to confirm changing the automatic transmission.

If consistent

Contact the Techline.

GETtheMANUALS.org

ALP6	**Erratic gear change in manual mode**

NOTES	**Special notes:** Only consult this customer complaint after running a check with the diagnostic tool on the multiplex network.

Check the selector lever clearance in manual position.
Check that the M + and M - switches are working properly with status **ET012 "Gear lever position"**.
Check the condition and the level of the gearbox oil (Smell of burning, colour).

GETtheMANUALS.org

LINE PRESSURE MEASUREMENT → **TEST1**

GETtheMANUALS.org

Test 1	Line pressure measurement

Tooling:
Gearbox kit Bvi 1215.01 and Bvi 1400.01.
Refit the O-ring to the line pressure tap plug and apply it to the end piece of the union to take the line pressure.

Prerequisite:
To access the line pressure checking bolts:
- Remove the engine undertray.
- Disconnect the wiring harness on the hydraulic distributor panel cover.

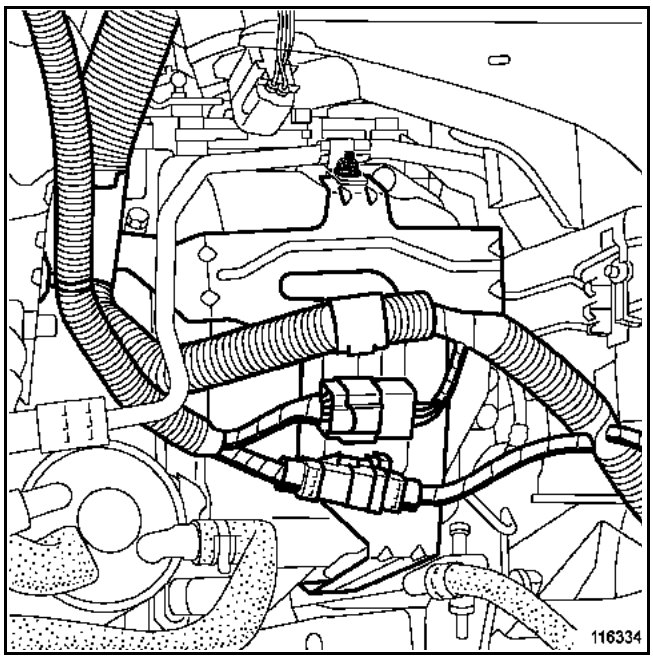

Procedure for measuring the line pressure:
- The apertures which enable the pressure to be taken are located on the converter housing, on the front of the vehicle.
- Use the plug O-ring already located on the gearbox.

Measuring the pressure in Drive position (D):

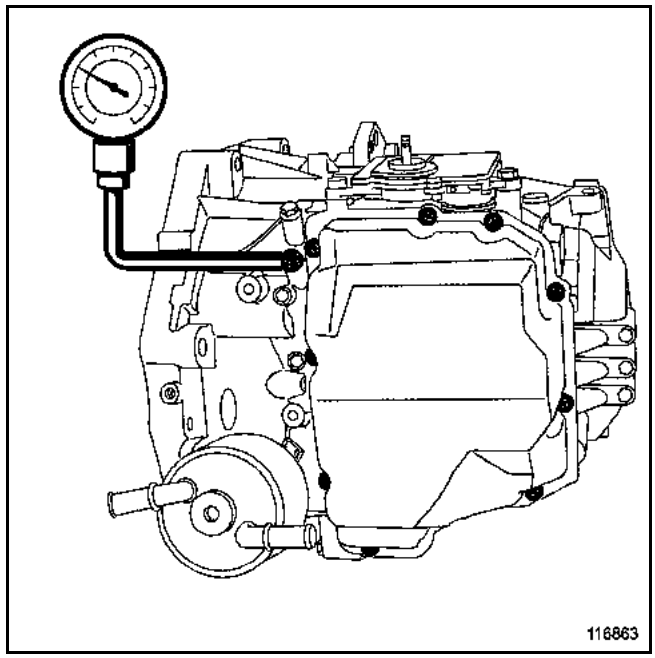

Measuring the pressure in position R (reverse):

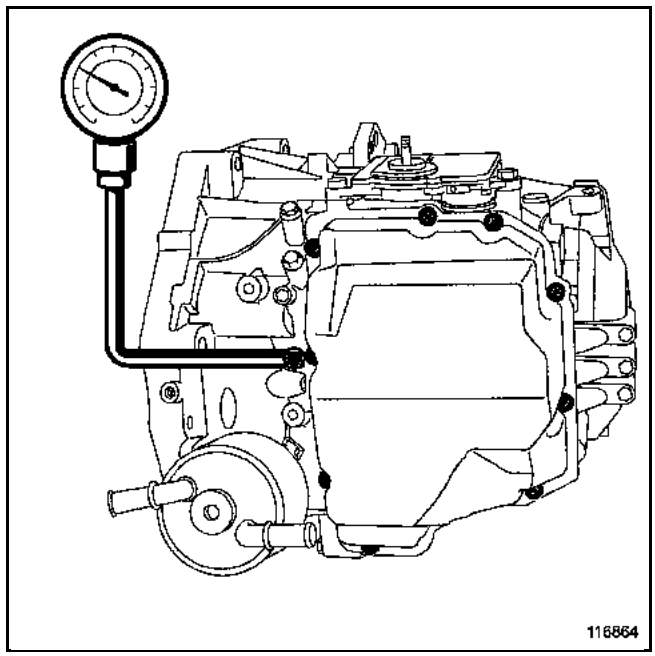

GETtheMANUALS.org

VEL SATIS

2 Transmission

23A AUTOMATIC TRANSMISSION

AJ0 BVA
Vdiag No.: 04

Fault finding - Introduction	23A - 2
Fault finding - List and location of components	23A - 8
Fault finding - Role of components	23A - 10
Fault finding - Operating diagram	23A - 11
Fault finding - Role of components	23A - 13
Fault finding - Replacement of components	23A - 21
Diagnostics - Configuration and programming	23A - 25
Fault finding - Fault summary table	23A - 26
Fault finding - Interpretation of faults	23A - 28
Fault finding - Conformity check	23A - 115
Fault finding - Status summary table	23A - 116
Fault finding - Interpretation of statuses	23A - 117
Fault finding - Parameter summary table	23A - 134
Fault finding - Interpretation of parameters	23A - 135
Fault finding - Command summary table	23A - 145
Fault finding - Interpretation of commands	23A - 146
Fault finding - Customer complaints	23A - 155
Fault finding - Fault Finding Chart	23A - 156

V1 **Edition Anglaise**

"The repair procedures given by the manufacturer in this document are based on the technical specifications current when it was prepared.

The procedures may be modified as a result of changes introduced by the manufacturer in the production of the various component units and accessories from which his vehicles are constructed."

All rights reserved by Renault s.a.s.

Copying or translating, in part or in full, of this document or use of the service part reference numbering system is forbidden without the prior written authority of Renault s.a.s.

© Renault s.a.s.

GETtheMANUALS.org

1. SCOPE OF THIS DOCUMENT

This document presents the fault finding procedure applicable to all computers with the following specifications:

Vehicle: **ESPACE IV ph2**	*Name of computer*: **Automatic transmission**
Function concerned: **Automatic transmission**	*Vdiag No.*: **04**

2. PREREQUISITES FOR FAULT FINDING

Documentation type

Fault finding procedures (this manual):
– Assisted fault finding (integrated into the **diagnostic tool**), Dialogys.
Wiring Diagrams:
– Visu-Schéma (CD-ROM).

Type of diagnostic tools

– CLIP

Special tooling required

Special tooling required	
	Multimeter
Elé. 1681	**Universal bornier**

3. REMINDERS

Procedure

To perform fault finding on the vehicle's computers, switch on the ignition in fault finding mode.

Proceed as follows:
– With the vehicle card in the card reader,
– press and hold start button (longer than **5 seconds**) with start-up conditions not fulfilled,
– connect the diagnostic tool and perform the required operations.

To **cut off + after ignition feed**, proceed as follows:
– disconnect the diagnostic tool,
– press the Start button twice briefly (less than **3 seconds**),
– ensure that the + after ignition feed has been cut off by checking that the computer indicator lights on the instrument panel have gone out.

GETtheMANUALS.org

Faults

Faults are declared as either present or stored (depending on whether they appeared in a certain context and have disappeared since, or whether they remain present but have not been diagnosed within the current context).

The **present** or **stored** status of faults should be taken into consideration when the **diagnostic tool** is switched on after the + after ignition feed (without any system components being active).

For a **present fault**, apply the procedure described in the **Interpretation of faults** section.

For a **stored fault**, note the faults displayed and apply the instructions in the **Notes** section.

If the fault is **confirmed** when the instructions in the Notes section are applied, the fault is present. Deal with the fault

If the fault is **not confirmed**, check:
- the electrical lines which correspond to the fault,
- the connectors on these lines (corrosion, bent pins, etc.),
- the resistance of the component detected as faulty,
- the condition of the wires (melted or split insulation, wear).

Conformity check

The aim of the conformity check is to check data that does not produce a fault on the **diagnostic tool** because the data is inconsistent. Therefore, this stage is used to:
- carry out fault finding on faults that do not have a fault display, and which may correspond to a customer complaint.
- check that the system is operating correctly and that there is no risk of a fault recurring after repairs.

This section gives the fault finding procedures for statuses and parameters and the conditions for checking them.

If a status is not behaving normally or a parameter is outside the permitted tolerance values, consult the corresponding fault finding page.

Customer complaints - Fault finding chart

If the test with the **diagnostic tool** is OK but the customer complaint is still present, the fault should be processed by **customer complaints**.

A summary of the overall procedure to follow is provided on the following page in the form of a flow chart.

GETtheMANUALS.org

4. FAULT FINDING PROCEDURE

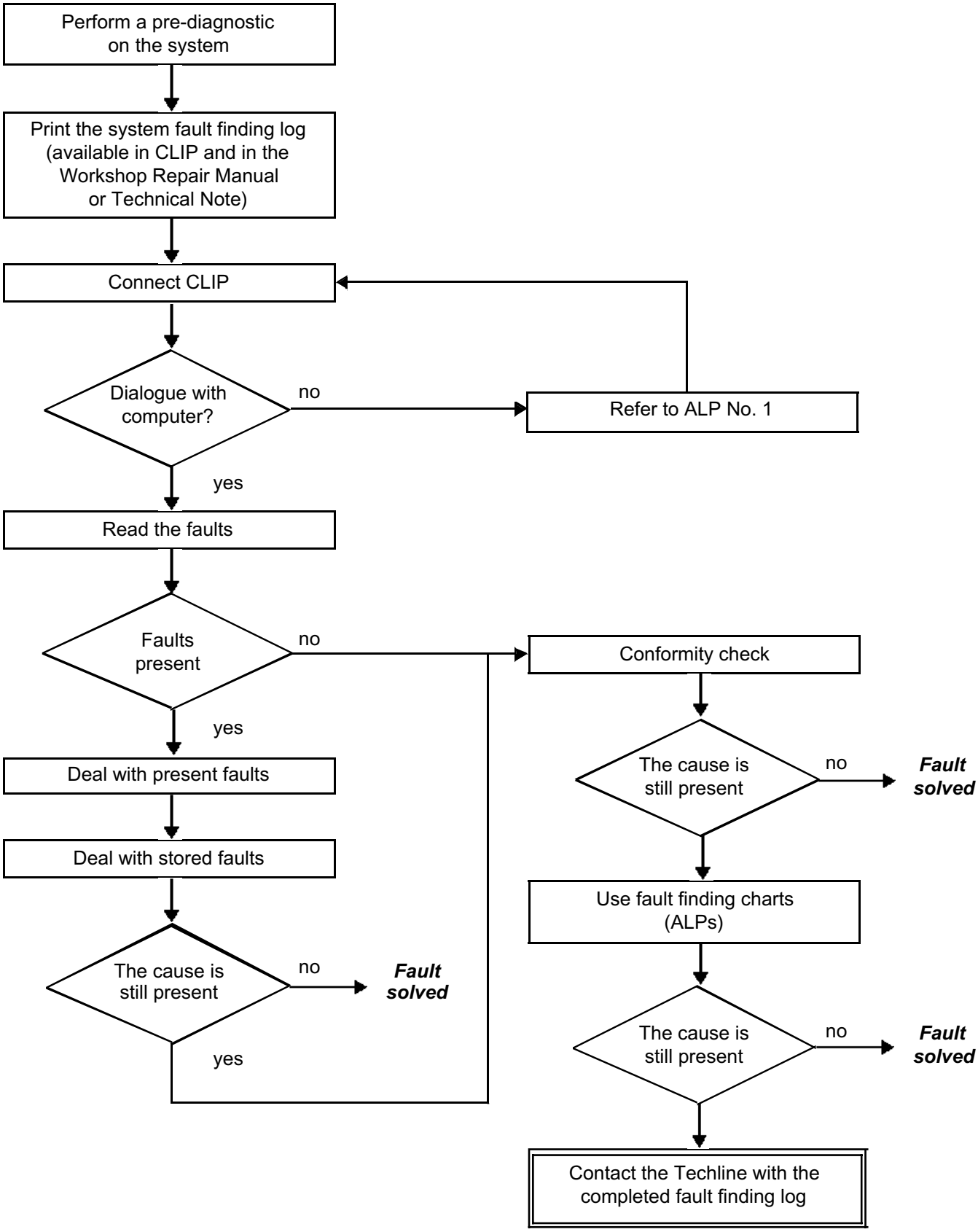

GETtheMANUALS.org

4. FAULT FINDING PROCEDURE (CONTINUED)

Wiring check

Note:
Carry out each requested check visually. Do not remove a connector if it is not required.

Note:
Repeated connections and disconnections alter the functionality of the connectors and increase the risk of poor electrical contact. Limit the number of connections/disconnections as much as possible.

Note:
The check is carried out on the 2 parts of the connection. There may be two types of connections:
- Connector / Connector
- Connector / Device

Fault finding problems

Disconnecting the connectors and/or manipulating the wiring harness may temporarily remove the cause of a fault.
Electrical measurements of voltage, resistance and insulation are generally correct, especially if the fault is not present when the analysis is made (stored fault).

Visual inspection of the connection:

- Check that the connector is connected correctly and that the male and female parts of the connection are correctly coupled.

Visual inspection of the area around the connection:

- Check the condition of the mounting (pin, strap, adhesive tape, etc.), that the connectors are attached to the vehicle.
- Check that there is no damage to the wiring trim (sheath, foam, adhesive tape, etc.) near the wiring.
- Check that there is no damage to the electrical wires at the connector outputs, in particular on the insulating material (wear, cuts, burns, etc.).

Disconnect the connector to continue the checks.

Visual inspection of the plastic casing:

- Check that there is no mechanical damage (casing crushed, cracked, broken, etc.), in particular to the fragile components (lever, lock, openings, etc.).
- Check that there is no heat damage (casing melted, darker, deformed, etc.).
- Check that there are no stains (grease, mud, liquid, etc.).

Visual inspection of the metal contacts:

(The female contact is called CLIP. The male contact is called TAB.)

- Check that there are no bent contacts (the contact is not inserted correctly and can come out of the back of the connector). The spring contact of the connector when pulling the wire slightly.
- Check that there is no damage (folded tabs, clips open too wide, blackened or melted contact, etc.).
- Check that there is no oxidation on the metal contacts.

GETtheMANUALS.org

Visual inspection of the sealing:
(*Only for watertight connectors*)

- Check for the seal on the connection (between the 2 parts of the connection).
- Check the seal at the back of the connectors:
  - For *unit* joints (1 for each wire), check that the unit joints are present on each electrical wire and that they are correctly positioned in the opening (level with the housing). Check that plugs are present on openings which are not used.
  - For a *grommet* seal (one seal which covers the entire internal surface of the connector), check that the seal is present.
  - For *gel* seals, check for gel in all of the openings without removing the excess or any protruding sections (it does not matter if there is gel on the contacts).
  - For *hotmelt* sealing (heat-shrink sheath with glue), check that the sheath has contracted correctly on the rear of the connectors and electrical wires, and that the hardened glue comes out of the side of the wire.
- Check that there is no damage to any of the seals (cuts, burns, significant deformation, etc.).

If a fault is detected, repair or replace the wiring (see **Technical Note 6015A, Repairing electrical wiring, Wiring: Precautions for repair**).

GETtheMANUALS.org

5. FAULT FINDING LOG

IMPORTANT

IMPORTANT
Any fault on a complex system requires thorough fault finding with the appropriate tools. The FAULTFINDING LOG, which should be completed during the procedure, enables you to keep track of the procedure which is carried out. It is an essential document when consulting the manufacturer.

IT IS THEREFORE MANDATORY TO FILL OUT A FAULT FINDING LOG EACH TIME IT IS REQUESTED BY TECHLINE OR THE WARRANTY RETURN PLATFORM.

You will always be asked for this log:

- when requesting technical assistance from Techline,
- for approval requests when replacing parts for which approval is mandatory,
- to be attached to monitored parts for which reimbursement is requested. The log is needed for warranty reimbursement, and enables better analysis of the parts removed.

6. SAFETY INSTRUCTIONS

Safety rules must be observed during any work on a component to prevent any damage or injury:

- check the battery voltage to avoid incorrect operation of computer functions,
- use the proper tools.

GETtheMANUALS.org

Number	Description
1	Oil temperature sensor
2	Clutch 1 solenoid valve
3	Clutch 1 solenoid valve
4	Clutch 3 solenoid valve
5	LS* pressure regulation solenoid valve
6	"EVS1"* shift solenoid
7	"EVS2"* shift solenoid
8	Converter lockup and brake 1 solenoid valve
9	Brake 2 solenoid valve
10	Clutch 1 solenoid valve pressure switch
11	Clutch 2 solenoid valve pressure switch
12	Clutch 3 solenoid valve pressure switch
13	Brake 1 solenoid valve pressure switch
14	Brake 2 solenoid valve pressure switch

*LS: line pressure.
*EVS: sequence solenoid valve.

GETtheMANUALS.org

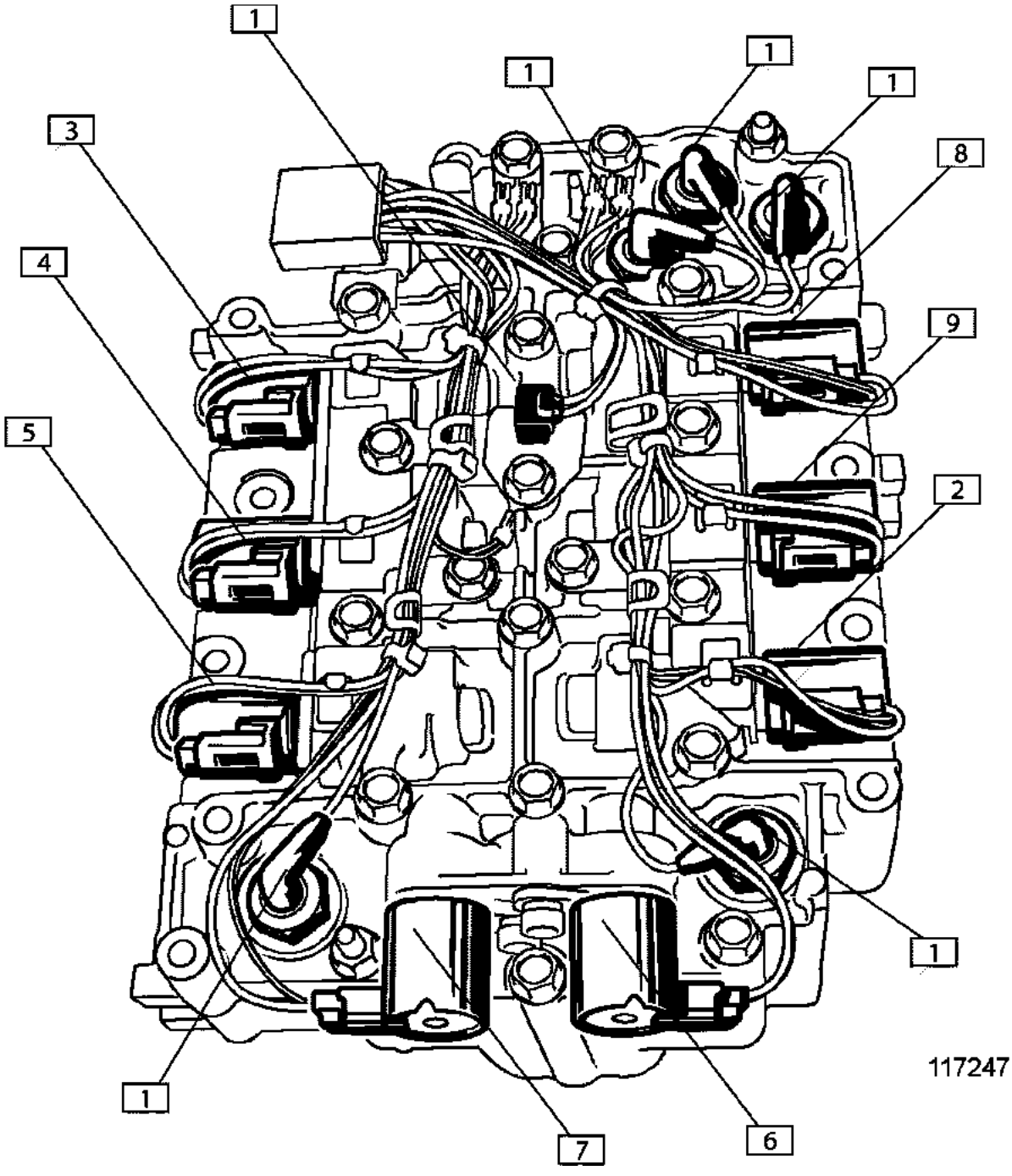

GETtheMANUALS.org

Role of main automatic transmission components

Automatic transmission computer:
The gearbox computer is used to manage the entire system.
Its role is to define the optimum operating mode for the automatic transmission (modify the torque transmitted to the drive wheels by the automatic transmission), inform the driver (instrument panel, information display, buzzer) and communicate with the other computers.
To carry out this function, the transmission computer takes account of:
– the operation of the gearbox,
– signals exchanged with other computers,
– driver requests.

Gearbox oil temperature sensor:
Its role is to inform the automatic transmission computer of the transmission oil temperature.

Transmission input speed sensor:
Its role is to inform the automatic transmission computer of the turbine speed.

Transmission output speed sensor:
Its role is to inform the automatic transmission computer of the vehicle speed.

Brake light switch:
Its role is to inform the automatic transmission computer that the driver has depressed the brake pedal.

Multifunction switch:
Its role is to inform the automatic transmission computer of the gear lever position.

Shift-lock:
The role of this function is to lock the lever in position “P” and to immobilise the vehicle when stationary.

Solenoid valves:
The solenoid valves are fitted in the factory and cannot be removed from the hydraulic distributor to ensure optimum gearbox operation, therefore they cannot be replaced separately.
The automatic transmission has two types of solenoid valve:
– 2 "all or nothing" solenoid valves,
– 6 "progressive" solenoid valves.
Of these 8 solenoid valves, 7 are used to control gear changes in automatic and manual modes, and one solenoid valve controls the oil pressure in the automatic transmission hydraulic distributor.

Instrument panel display:
The purpose of this function is to manage the transmission of multiplex line signals required for the instrument panel display.

On the instrument panel:
– a fault warning light,
– a message on the instrument panel in case of irregularity,
– an information display: gear lever position / gear engaged / brake pedal depressed indicator light / lever positioning in P or N request indicator light.

On the gear lever:
– Position: P / R / N / D / M+/-,
– Shift-lock: lever lock.

GETtheMANUALS.org

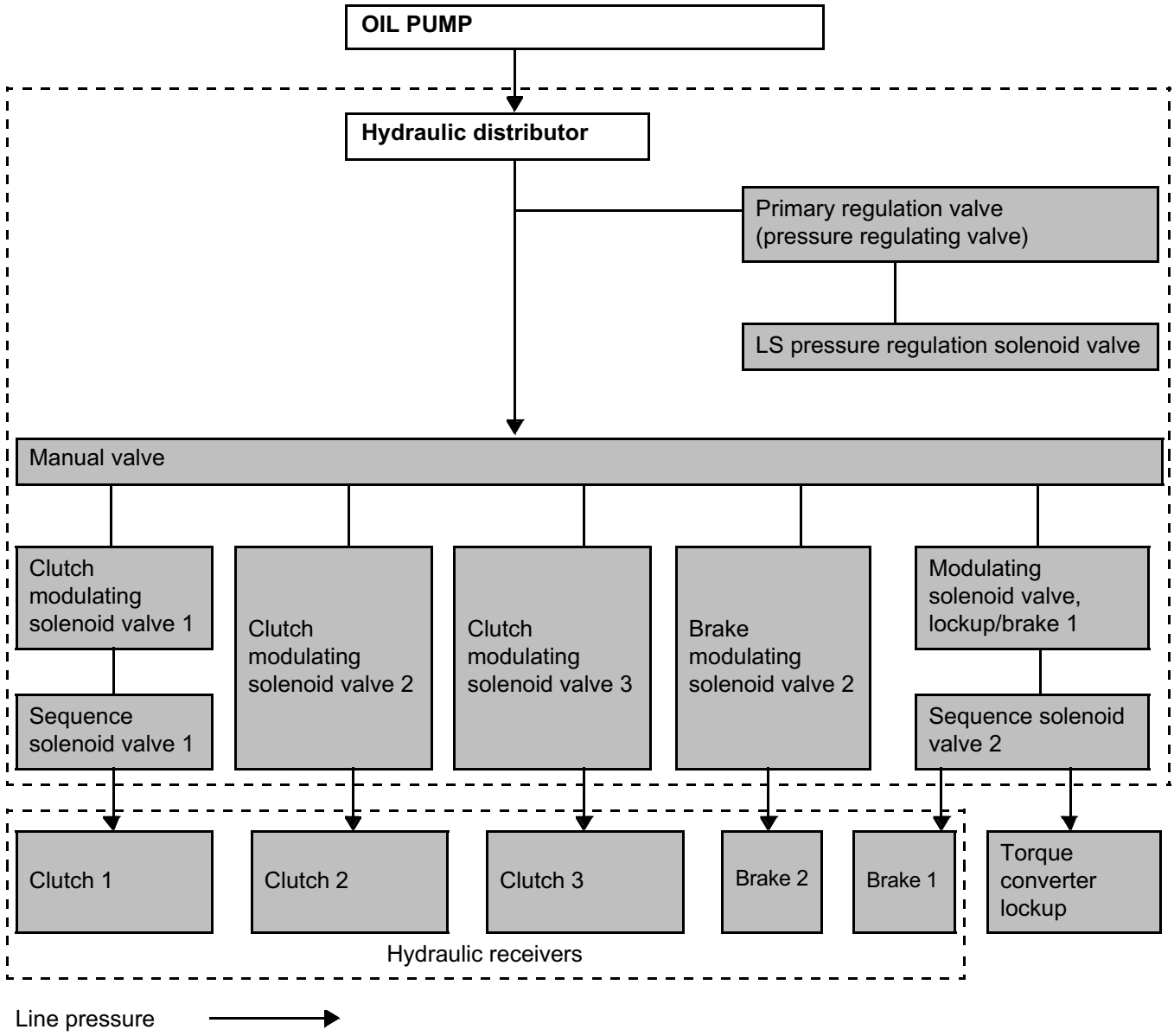

GETtheMANUALS.org

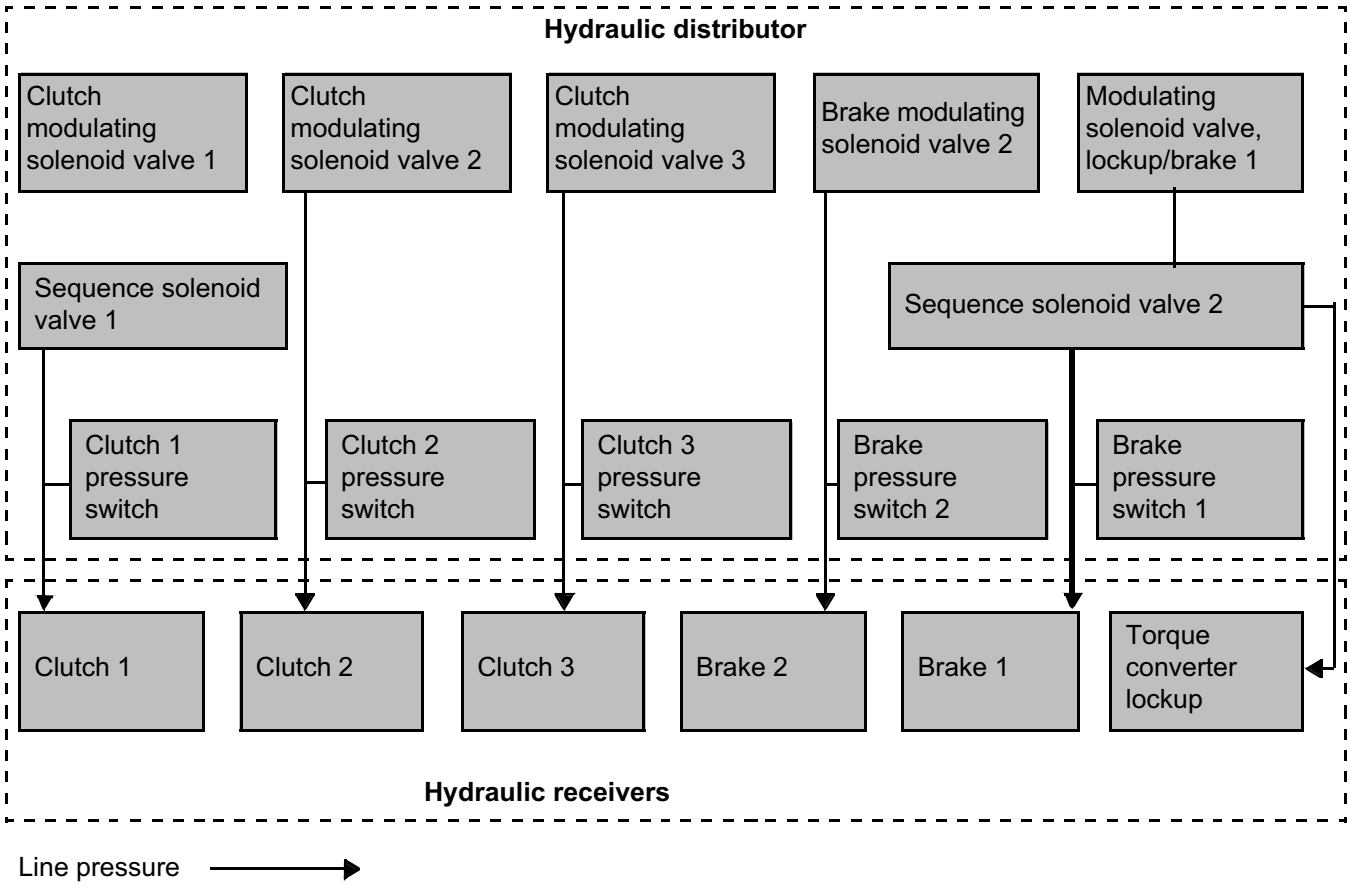

GETtheMANUALS.org

The automatic transmission computer performs the following functions:

– Transmission operating mode selection:
According to the vehicle speed and the driver's request expressed by the accelerator pedal position, the automatic transmission determines the best moment for the gear change. The automatic transmission computer corrects any driver errors and inhibits engagement of a gear that would cause the engine to over- or under-rev.

– Gear changes:
Taking into account the various input factors, the computer will decide whether to actuate the various solenoid valves to ensure smooth system operation (automatic transmission clutches, brakes and hydraulics).

The computer is also involved in:
- the gear change quality,
- protecting the automatic transmission in the event of a malfunction.

– Disengaging clutch when stopped:
This function enables creep* to be inhibited temporarily when the vehicle is stationary with a gear engaged and the brake pedal depressed.

The aim of this function is to reduce drag on the vehicle in order to:
- reduce fuel consumption,
- reduce vehicle vibrations,

Creep*: describes the action of the vehicle moving forwards without acceleration and with a gear engaged.

GETtheMANUALS.org

"Automatic transmission management" FUNCTION:

Purpose of this function:
This function enables the automatic transmission computer to define the gear change programs.

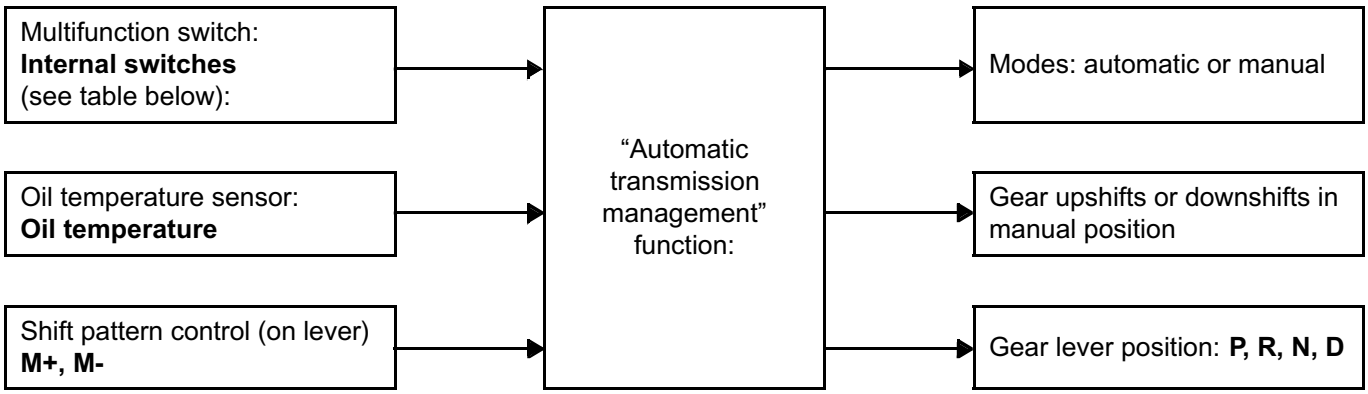

Position of multifunction switch and its associated tracks on the computer:

Track \ Position	P	R	N	D
2		o		
1	o			
3			o	
4				o
56	o	o	o	o

GETtheMANUALS.org

"GEAR CHANGE" FUNCTION:

Purpose of this function:
The purpose of this function is to control gear changes in automatic and manual modes.

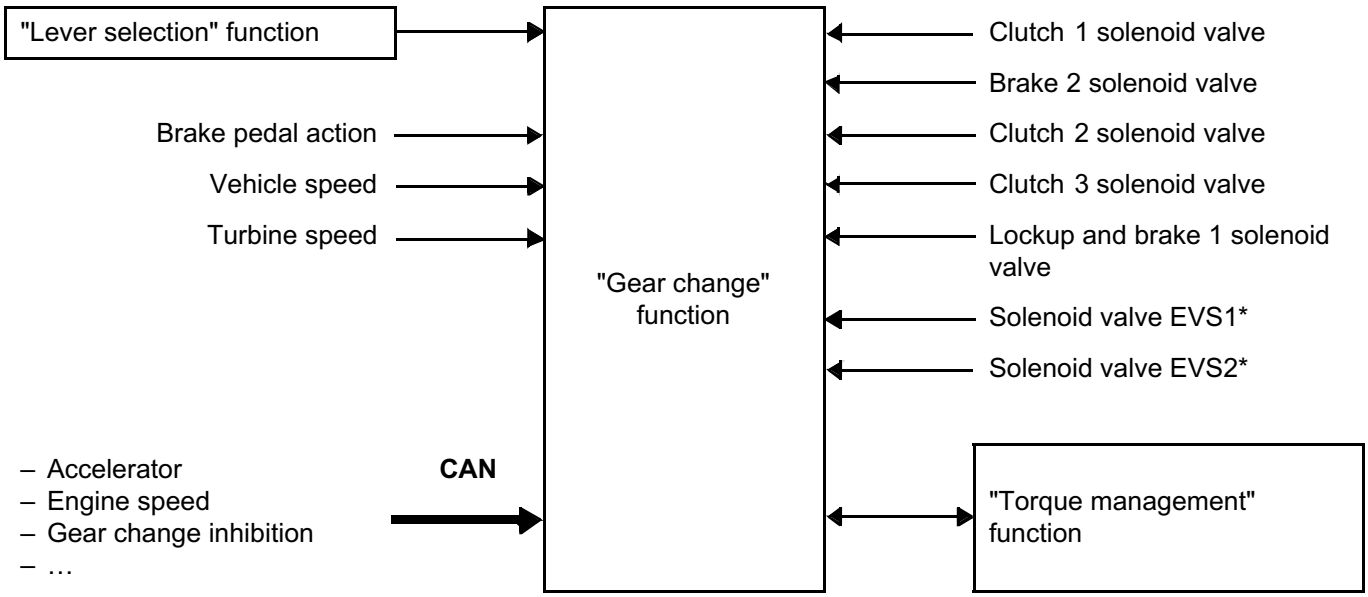

***EVS: Sequence solenoid valve**

GETtheMANUALS.org

System operation table:

	PRESSURE SWITCHES					SOLENOID VALVES					SOLENOID VALVES (ALL OR NOTHING)	
	Clutch* 1	Brake 2	Clutch* 2	Clutch* 3	Brake 1	Clutch* 1	Brake 2	Clutch* 2	Clutch* 3	Lockup and brake 1	*EVS1	*EVS2
P												O
R			O		O			O		O		O
N								O	O			O
fixed 1st gear	O				O	O		O	O	O		O
D1	O*					O		O	O			O
D2	O	O				O	O	O	O			
D2 with lockup	O	O				O	O	O	O	O		
D3	O		O			O			O			
D3 with lockup	O		O			O			O	O		
D4	O			O		O		O				
D4 with lockup	O			O		O		O		O		
D5			O	O							O	
D5 lockup			O	O						O	O	
D6		O		O			O	O			O	
D6 with lockup		O		O			O	O		O	O	

O = **Active**
***Clutch =** **Clutch**
***EVS =** **Sequence solenoid valve**
******O*: Check (engine running at idle speed and brake pedal depressed), status **ET261 "Clutch 1"** lever in position **"D":**
ET013 "gear engaged" = "1" -> status **ET261 "Clutch 1"** is **"active"**; if status **ET013 "gear engaged"** is **"disengaged"** (clutch disengaged when stationary) -> **ET261 "Clutch 1"** is **"inactive"**.

GETtheMANUALS.org

Note:
– Clutch solenoid valves 2 and 3 are high pressure solenoid valves. These solenoid valves are in opposition to the status of their corresponding pressure switch.
Example:
– In position "R", clutch solenoid valve 3 is active (therefore under low pressure) and the clutch pressure switch 3 status is inactive.
– Clutch solenoid valve 1, brake solenoid valve 2 and brake/lockup solenoid valve 1 are low pressure solenoid valves. These solenoid valves are therefore in phase with the status of their corresponding pressure switch.

Note:
If the gearbox is D2 locked up, D3 locked up, D4 locked up, D5 locked up or D6 locked up, the brake pressure switch status is not in line with brake/lockup solenoid valve 1.

"PRESSURE CONTROL" FUNCTION:

Purpose of this function:
The purpose of this function is to regulate the oil pressure inside the transmission hydraulic distributor.

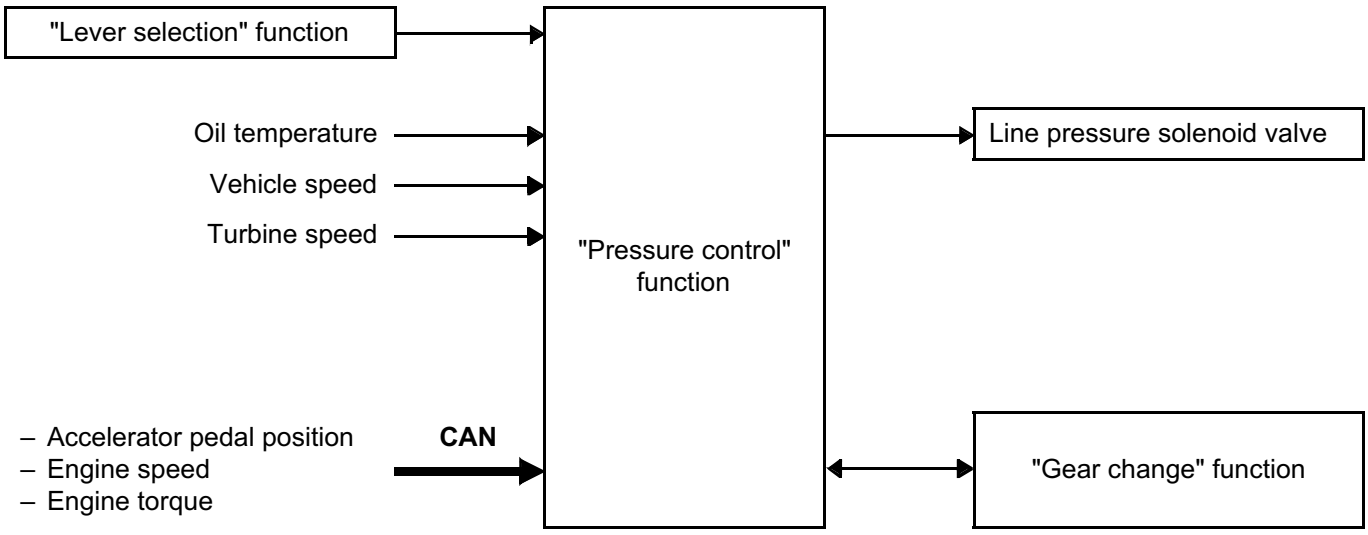

GETtheMANUALS.org

"CONVERTER lockup" FUNCTION:

Aim of this function: The aim of this function is to lock up the converter.

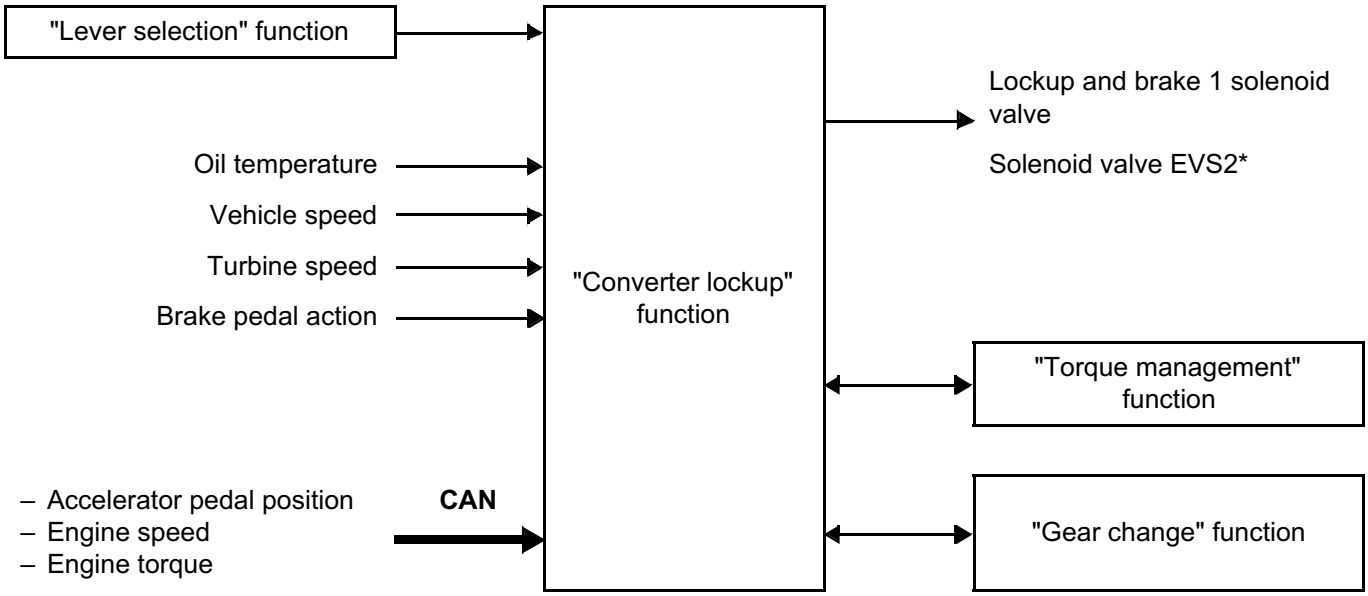

Lockup/release definition:

The converter is a hydraulic clutch which provides a hydraulic connection between the engine and the automatic transmission pressure plate.

The purpose of the lockup function is to lock the turbine and the converter casing together, transforming a hydraulic connection into a mechanical connection. The role of the lockup function is to prevent slipping losses.

EVS2*: sequence solenoid valve 2.

GETtheMANUALS.org

"TORQUE MANAGEMENT" FUNCTION:

Purpose of this function:
The purpose of this function is to manage the torque setpoints during certain gear shifts by informing the injection computer. This function means smoother gear shifts and better mechanical protection.

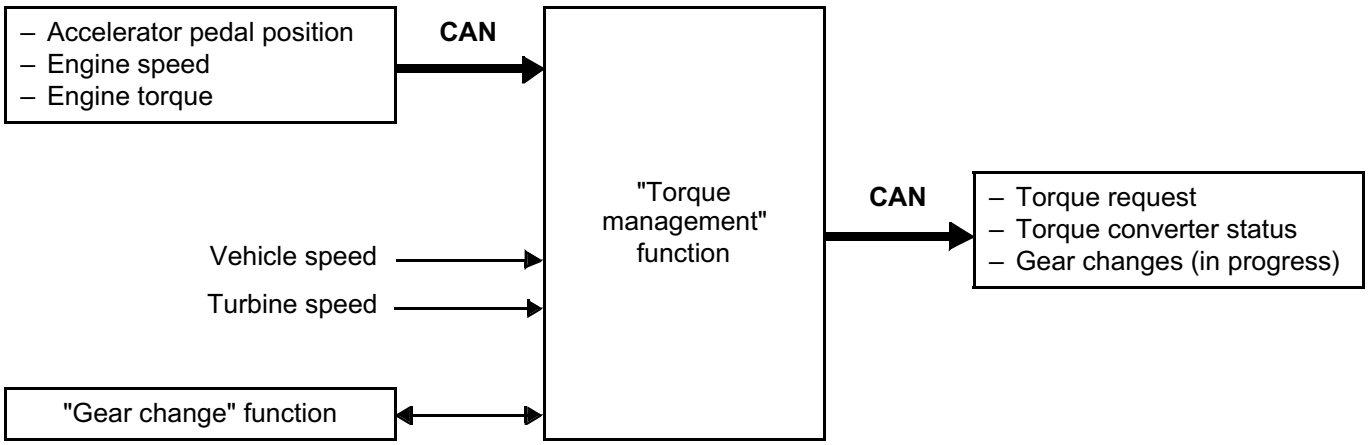

"SHIFT LOCK" FUNCTION:

Purpose of this function:
Shift-lock: locking the gear lever in position **"P"** and blocking the transmission to immobilise the vehicle while stationary.
To release the gear lever from position "**P**", the vehicle must be stationary and the brake pedal depressed.

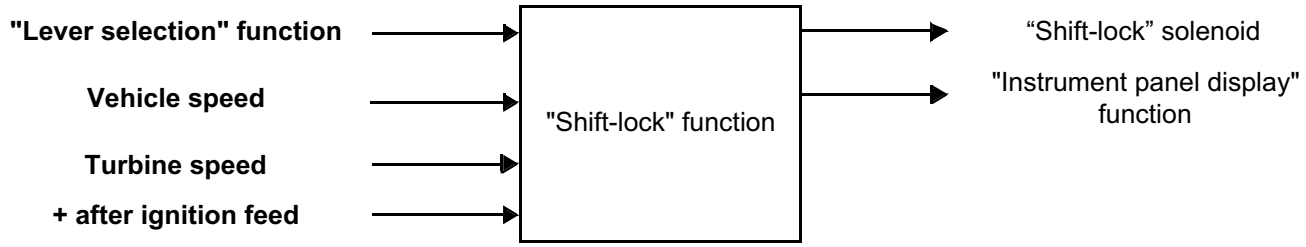

GETtheMANUALS.org

"INSTRUMENT PANEL DISPLAY" FUNCTION:

Purpose of this function:
The purpose of this function is to manage the transmission of multiplex line signals required for the instrument panel display.

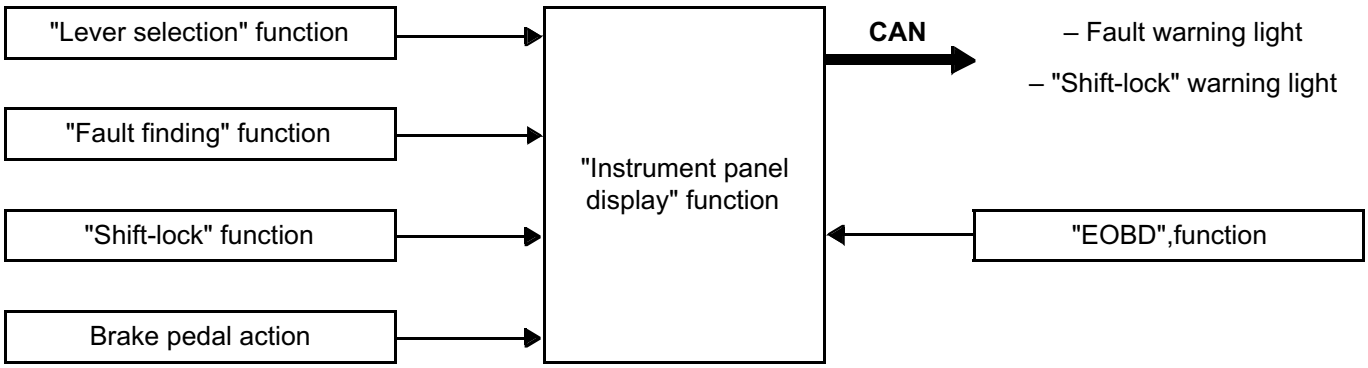

GETtheMANUALS.org

Tool fault	Diagnostic tool title	Defect modes
DF023	Transmission oil temperature sensor circuit	– in the event of open circuit or short circuit+: If the fault occurs while driving, the transmission engages fixed 5th gear. Restarting is in 3rd gear. Safe value: **- 55 ˚C**. – in the event of short circuit-: No defect mode.
DF038	Turbine speed sensor circuit	If the fault occurs while driving: Gear fixed. Restarting is in fixed 3rd gear. Safe value: 0 rpm.
DF067	Lever switch circuit	No defect mode.
DF084	Multiplex network	If the fault occurs while driving, the transmission engages fixed 5th gear. Restarting is in 3rd gear.
DF085	EVS1 sequence solenoid valve circuit	– in the event of open circuit or short circuit+: Fixed 5th gear engaged. Restarting is in 5th gear. – in the event of short circuit-: No defect mode.
DF086	“ESV2”* shift solenoid circuit	Fixed 5th gear engaged. Restarting is in 3rd gear.
DF091	“LS”* pressure regulation solenoid valve circuit	No defect mode.
DF093	Manual sequential controls circuit	No defect mode.
DF095	Gear lever lock electromagnet circuit	No defect mode.
DF097	Converter lockup	No defect mode.
DF108	Effective average torque multiplex signal	If the fault occurs while driving, the gearbox engages fixed 5th gear. Restarting is in 3rd gear.
DF171	Vehicle speed sensor circuit	If the fault occurs while driving: Gear fixed. Restarting is in fixed 3rd gear.
DF178	Accelerator pedal position	No defect mode.
DF183	No UCH multiplex signal.	No defect mode.
DF186	No injection multiplex signal	If the fault occurs while driving, the gearbox engages fixed 5th gear. Restarting is in 3rd gear.

* sig.: signal
*EVS1 = sequence solenoid valve 1
*EVS2 = sequence solenoid valve 2
*LS = line pressure regulation solenoid valve

GETtheMANUALS.org

Tool fault	Diagnostic tool title	Defect modes
DF230	Invalid vehicle speed multiplex sig.*	No defect mode.
DF236	Invalid engine speed multiplex signal	No defect mode.
DF238	Invalid raw engine torque multiplex sig.*	If the fault occurs while driving, the gearbox engages fixed 5th gear. Restarting is in 3rd gear.
DF256	Erratic gear jumping	– If caused by brake 2 solenoid valve, system switches to fixed 3rd or 5th gear safe mode. – If caused by clutch 2 solenoid valve, system switches to fixed 2nd or 6th gear safe mode. – If caused by clutch 3 solenoid valve, system switches to fixed 2nd, 3rd or 5th gear safe mode. – If caused by clutch 1 solenoid valve, system switches to fixed 3rd, 5th or 6th gear safe mode. In all cases, restarting is in 3rd gear.
DF273	Clutch 1 solenoid valve circuit	If the fault occurs while driving, the transmission engages fixed 5th gear. Restarting in fixed 5th gear (no more gear changes).
DF274	Clutch 2 solenoid valve circuit	– in the event of open circuit or short circuit+: No defect mode. – in the event of short circuit-: If the fault occurs while driving, the transmission engages fixed 5th gear. Restarting in fixed 3rd gear (no more gear changes).
DF275	Clutch 3 solenoid valve circuit	– in the event of open circuit or short circuit+: No defect mode. – in the event of short circuit-: If the fault occurs while driving, the transmission engages fixed 5th gear. Restarting in fixed 5th gear (no gear change).
DF289	Automatic transmission multiplex signal	No defect mode.
DF290	Multiplexed ABS signal	No defect mode.
DF298	Gear shifts	– If caused by brake 2 solenoid valve, system switches to fixed 6th gear safe mode. – If caused by clutch 2 solenoid valve, system switches to fixed 5th gear safe mode. Restarting in 3rd gear. – If caused by clutch 3 solenoid valve, system switches to fixed 5th gear safe mode.

* sig.: signal

GETtheMANUALS.org

Tool fault	Diagnostic tool title	Defect modes
DF300	Brake 2 solenoid valve circuit	– in the event of an open circuit or short circuit +: No defect mode. – in the event of short circuit-: If the fault occurs while driving, the transmission engages fixed 5th gear. Restarting in fixed 3rd gear (no gear change)
DF301	Clutch 1 pressure switch circuit	No defect mode.
DF302	Clutch 2 pressure switch circuit	No defect mode.
DF303	Clutch 3 pressure switch circuit	No defect mode.
DF304	Brake 1 pressure switch circuit	No defect mode.
DF305	Brake 2 pressure switch circuit	No defect mode.
DF306	Lockup/brake 1 solenoid valve circuit	Fixed 5th gear engaged. Restarting in fixed 3rd gear (no gear change)
DF307	Engine braking	No defect mode.
DF308	Computer earth	Fixed 5th gear engaged.

GETtheMANUALS.org

Replacing the gearbox computer:
Remove the automatic transmission **computer** (see **MR 405 mechanical, 23A, Automatic transmission, Automatic transmission computer, Removal - Refitting**).

Refit the **automatic transmission computer** (see **MR 405 mechanical, 23A, Automatic transmission, Automatic transmission computer, Removal - Refitting**).

Establish dialogue with the **diagnostic tool**.
Use command **VP001 Enter VIN**.
Run command **VP009 "Write last After-Sales Service operation date"**.

Do not carry out any automatic programming if replacing the automatic transmission computer. Automatic programming is finalised when the vehicle is driven.
In order to optimise the automatic programming before delivering the vehicle to the customer, apply the "Programming procedure" shown below.

Replacing the hydraulic distributor:
Remove the transmission **hydraulic distributor** (see **MR 405 mechanical, 23A, automatic transmission, Hydraulic distributor, Removal - Refitting**).
Refit the transmission **hydraulic distributor** (see **MR 405 mechanical, 23A, automatic transmission, Hydraulic distributor, Removal - Refitting**).

Replacing the automatic transmission
Remove the transmission (see **MR 405, Mechanical, 23A, Automatic transmission, Removal - Refitting**).
Refit the transmission (see **MR 405, Mechanical, 23A, Automatic transmission, Removal - Refitting**).

Establish communication with the **diagnostic tool**.
Run command **VP009 "Write last After-Sales Service operation date"**.

The self-programming functions are performed when the vehicle is being driven.
In order to optimise the automatic programming before delivering the vehicle to the customer, apply the "Programming procedure" shown below.

PROGRAMMING PROCEDURE:
Programming conditions:
The automatic gearbox oil temperature should be between **60 ˚C and 100 ˚C**.
Stationary, engine running, **brake pedal depressed**:
→ **When stationary, engage neutral at least 5 times to consolidate the programming.**
While driving:
→ **Engage the same gear at least 5 times (i.e. under the same conditions) to consolidate the programming.**

Note:
Gear changes are slow and harsh the first few times the vehicle is driven, until the automatic transmission computer has carried out its automatic programming.
During upshifts and downshifts, the system analyses variations in oil pressure, components (play in the brakes and clutches, changes in spring stiffness due to ageing) and input torque, then corrects the variations in order to maintain the quality of gear changes.
The system analyses the turbine speed during the 3 phases of drag reduction (selection of Neutral when stationary, regulation during drag reduction and deselection of Neutral) and corrects this speed by adjusting the converter lockup solenoid valve pressure.

* APV: After-Sales

GETtheMANUALS.org

SETTINGS

VP001: **Enter VIN.**
This command permits manual entry of the vehicle's VIN into the computer.
Use this command each time the computer is replaced or (re)programmed.

VP009: **Enter last APV* operation date.**
Run this command after replacing or removing - refitting the transmission computer and the automatic transmission.
This command is used to enter the date of the last service operation.

Do not carry out any programming operation if replacing a component; automatic programming is carried out during driving (See **Replacement of components, Programming procedure**).

* APV: After-Sales

GETtheMANUALS.org

Tool fault	Associated DTC	Diagnostic tool title
DF023	710	Transmission oil temperature sensor circuit
DF038	715	Turbine speed sensor circuit
DF067	705	Lever position switch circuit
DF084	C073	Multiplex network
DF085	1753	EVS1* shift solenoid circuit
DF086	1758	“ESV2”* shift solenoid circuit
DF091	748	“LS”* pressure regulation solenoid valve circuit
DF093	826	Manual sequential controls circuit
DF095	928	Gear lever lock electromagnet circuit
DF097	740	Converter lockup
DF108	5300	Effective average torque multiplex signal
DF171	720	Vehicle speed sensor circuit
DF178	5600	Accelerator pedal position
DF183	C140	No UCH multiplex signal
DF186	C100	No injection multiplex signal
DF230	C415	Invalid vehicle multiplex speed sig.*
DF236	725	Invalid engine speed multiplex signal
DF238	4073	Invalid raw engine torque multiplex signal*

* sig.: signal
*EVS1 = sequence solenoid valve 1
*EVS2 = sequence solenoid valve 2
*LS = line pressure regulation solenoid valve

GETtheMANUALS.org

Tool fault	Associated DTC	Diagnostic tool title
DF256	730	Erratic gear jumping
DF273	753	Clutch 1 solenoid valve circuit
DF274	763	Clutch 2 solenoid valve circuit
DF275	768	Clutch 3 solenoid valve circuit
DF289	1840	Automatic transmission multiplex signal
DF290	C121	Multiplexed ABS signal
DF298	893	Gear shifts
DF300	758	Brake 2 solenoid valve circuit
DF301	751	Clutch 1 pressure switch circuit
DF302	761	Clutch 2 pressure switch circuit
DF303	766	Clutch 3 pressure switch circuit
DF304	741	Brake 1 pressure switch circuit
DF305	756	Brake 2 pressure switch circuit
DF306	743	Lockup/brake 1 solenoid valve circuit
DF307	780	Engine braking
DF308	1560	Computer earth

GETtheMANUALS.org

DF023 PRESENT OR STORED	GEARBOX OIL TEMPERATURE SENSOR CIRCUIT CO.1 : Short circuit or open circuit to + 12 V 1.DEF : Permanent low level CC.0 : Short circuit to earth 2.DEF : Signal incoherence

NOTES	**Conditions for applying fault finding procedures to stored faults:** The fault is declared present after: **– in the event of open circuit or short circuit+:** – **+ after ignition feed**, – oil temperature ≤ **- 40 °C**, – vehicle speed > **6 mph (10 km/h)**. **– in the event of permanent low level:** – **+ after ignition feed**, – oil temperature < **- 20 °C**, – vehicle speed > **6 mph (10 km/h)**, – accelerator pedal > **12.5 %** and engine speed > **305 rpm**. **– in the event of short circuit-:** – **+ after ignition feed**, – oil temperature > **180 °C**, – vehicle speed > **6 mph (10 km/h)**, – accelerator pedal > **12.5 %** and engine speed > **305 rpm**. – (**detection time in the event of short circuit- is 10 minutes**). **– in the event of signal incoherence:** – **+ after ignition feed**, – **- 20 °C** < oil temperature < **20 °C**, – vehicle speed > **6 mph (10 km/h)**, – accelerator pedal > **12.5 %** and engine speed > **305 rpm**.
	Effect on system: **– in the event of open circuit or short circuit+:** – The transmission operates as if the temperature was very low. – The lockup is inhibited (still open). Note: The default value is **-55 °C**. **– in the event of permanent low level:** – The transmission operates as if the temperature was very low. **– in the event of short circuit-:** – The transmission operates as if the temperature had increased. – No drag reduction when stationary. – The motor-driven fan assemblies are triggered at a vehicle speed < **48 mph (80 km/h)** until the fault appears. **– in the event of signal incoherence:** – No system effect.

GETtheMANUALS.org

DF023 CONTINUED 1	

NOTES	**Customer complaint:** **– in the event of open circuit or short circuit+:** If the fault occurs while driving, the transmission engages fixed 5th gear. Restarting is in 3rd gear. Gear change quality is reduced. Fault warning light comes on. **– in the event of permanent low level:** Fault warning light comes on. **– in the event of short circuit-:** Fault warning light comes on. **– in the event of signal incoherence:** Fault warning light comes on.
	Use the Wiring Diagrams Technical Note, ESPACE IV ph2.

Check that the coolant temperature **(**see **13B, Diesel injection, Conformity check)** is ≥ **- 40 ˚C** (the gearbox oil temperature sensor is within its operating range).
If the oil temperature is ≤ **- 40 ˚C**, move on to **step 1**.
If the oil temperature is ≥ **- 40 ˚C**, deal with the fault, move on to **step 2**.

Step 1:

Start the vehicle, check that the engine coolant temperature is ≥ **20 ˚C**.
If the fault is stored, deal with the other faults displayed on the **diagnostic tool**. In the absence of faults, end of fault finding.
If a fault is still present, deal with it, then move on to **step 2**.

AFTER REPAIR	Deal with any other faults. Clear the fault memory. Switch off the ignition, wait **1 minute** and carry out a road test followed by another check with the **diagnostic tool**.

GETtheMANUALS.org

DF023 CONTINUED 2	

Step 2:

Look for any damage to the harness and check the condition and connection of the **automatic transmission computer** and **automatic transmission** connectors.
If the connection or connections are faulty and there is a repair procedure (see **Technical Note 6015A, Electrical wiring repair, Wiring: Precautions for repair**), repair the wiring, otherwise replace it.

Disconnect the connector of component **119**, measure the **resistance of the oil temperature sensor** (on the connector of component **119**) between the following connections:
- Connection code **5BZ**,
- Connection code **5BY**.

The **resistance** should be between:
– **4.208 ± 0.42 kΩ at 20 ˚C,**
– **1.947 ± 0.19 kΩ at 40 ˚C,**
– **0.988 ± 0.09 kΩ at 60 ˚C.**

Is the **resistance** correct?
If YES, contact the Techline.
If NO, move on to **step 3**.

Stage 3:

Disconnect the connector from component **R22** and check the **continuity and insulation** of the following connections:
- Connection code **5BZ**,
- Connection code **5BY**.

Between component 119 and connector R22.
If the connection or connections are faulty and there is a repair procedure (see **Technical Note 6015A, Electrical wiring repair, Wiring: Precautions for repair**), repair the wiring, otherwise replace it.

Are the **continuity and insulation** correct?
If YES, move on to **step 4**.
If NO, replace the **external wiring harness** on the automatic transmission.

AFTER REPAIR	Deal with any other faults. Clear the fault memory. Switch off the ignition, wait **1 minute** and carry out a road test followed by another check with the **diagnostic tool**.

GETtheMANUALS.org

DF023 CONTINUED 3	

Stage 4:

Measure the **resistance** of the **oil temperature sensor** (on connector **R22**) between the following connections:
- Connection code **5BZ**,
- Connection code **5BY**.

The **resistance** should be between:
– **4.208 ± 0.42 kΩ at 20 ˚C,**
– **1.947 ± 0.19 kΩ at 40 ˚C,**
– **0.988 ± 0.09 kΩ at 60 ˚C.**

Is the **resistance** correct?
If YES, and if the fault is still present, contact the Techline.
If NO, move on to **step 5**.

Stage 5:

Drain the **automatic transmission** (see **MR 405, Mechanical, 23A Automatic transmission, Oil change**) and remove the transmission housing (see **MR 405, Mechanical, 23A Automatic transmission, Hydraulic distributor**).

Measure the **resistance** of the **transmission temperature sensor** (on the connector of the **internal wiring harness** on the **transmission**) between the following connections:
- Connection code **5BZ**,
- Connection code **5BY**.

The **resistance** should be between:
– **4.208 ± 0.42 kΩ at 20 ˚C,**
– **1.947 ± 0.19 kΩ at 40 ˚C,**
– **0.988 ± 0.09 kΩ at 60 ˚C.**

Is the **resistance** correct?
If YES, move on to **step 6**.
If NO, replace the **internal wiring harness** on the **automatic transmission**.

Stage 6:

Measure the **continuity and insulation** of the following connections:
- Connection code **5BZ**,
- Connection code **5BY**.

Between connector **R22 and the internal connector in the transmission**.

Are the **continuity and insulation** correct?
If YES, contact the Techline.
If NO, replace the wiring harness between connector **R22** and the **internal** connector in the transmission.

AFTER REPAIR	Deal with any other faults. Clear the fault memory. Switch off the ignition, wait **1 minute** and carry out a road test followed by another check with the **diagnostic tool**.

GETtheMANUALS.org

DF038 PRESENT OR STORED	TURBINE SPEED SENSOR CIRCUIT 1.DEF : Open circuit or short circuit

NOTES	**Conditions for applying fault finding procedures to stored faults:** The fault is declared present after: – **+ after ignition feed**, – with the engine running, – vehicle speed > **24 mph (40 km/h**), – engine speed > **1500 rpm**, – turbine speed < **600 rpm** and accelerator pedal > **0 %**.
	Effect on system: Impossible to calculate gear. lockup is inhibited. Note: The safe value is **0 rpm**.
	Customer complaint: When the fault appears, the gear remains fixed. Restarting in fixed 3rd gear (no more gear changes). Manual mode is inhibited. Fault warning light comes on.
	Use the Wiring Diagrams Technical Note, ESPACE IV ph2.

Look for any damage to the wiring harness, and check the condition and connection of the **transmission computer** and the **turbine speed sensor**.
If the connection or connections are faulty and there is a repair procedure (see **Technical Note 6015A, Electrical wiring repair, Wiring: Precautions for repair**), repair the wiring, otherwise replace it.

Check for **+ after ignition feed** on connection **AP4** of component **1060**.

Is the **+ after ignition feed** still present?
If YES, move on to **step 1**.
If NO, move on to **step 2**.

Step 1:

Check **the continuity and insulation** of the following connections:
- Connection code **5HN**,
- Connection code **5DA**.

Between components **119 and 1060**.
If the connection or connections are faulty and there is a repair procedure (see **Technical Note 6015A, Electrical wiring repair, Wiring: Precautions for repair**), repair the wiring, otherwise replace it.

Check the intermediate connector **R22**, if the fault is still present, replace component **1060**.

If the fault is still present, contact the Techline.

AFTER REPAIR	Deal with any other faults. Clear the fault memory. Switch off the ignition, wait **1 minute** and carry out a road test followed by another check with the **diagnostic tool**.

GETtheMANUALS.org

DF038 CONTINUED	

Step 2:
Check **the continuity and insulation** of the following connection: ● Connection code **AP4** between components **119 and 1337**. If the connection or connections are faulty and there is a repair procedure (see **Technical Note 6015A, Electrical wiring repair, Wiring: Precautions for repair**), repair the wiring, otherwise replace it.
Check for **+ after ignition feed** on connection **AP4** of component **1337**.
Is the **+ after ignition feed** still present? If YES, move on to **step 1**. If NO (see **87G, Engine compartment connection unit**). If the fault is still present, contact the Techline.

AFTER REPAIR	Deal with any other faults. Clear the fault memory. Switch off the ignition, wait **1 minute** and carry out a road test followed by another check with the **diagnostic tool**.

GETtheMANUALS.org

DF067 PRESENT OR STORED	LEVER POSITION SWITCH CIRCUIT CO.0 : Open circuit or short circuit to earth CC.1 : Short circuit to + 12 volts

NOTES	**Conditions for applying fault finding procedures to stored faults:** The fault is declared present after: **– in the event of open circuit or short circuit-:** + after ignition feed and change of lever position. **– in the event of short circuit+:** + after ignition feed, initial lever position: Position "P", "R", "N" or "D".
	Effect on system: The lever value is held at its previous valid position until the fault is confirmed. Then the lever position becomes "DRIVE" (internal software variable) irrespective of the fault. – If the fault is present and the lever in position "P", the transmission is in "N", hydraulic neutral. – If the fault is present and the lever in position "R", the transmission is in "R", hydraulic reverse. – If the fault is present and the lever in position "N", the transmission is in "N", hydraulic neutral. – If the fault is present and the lever in position "D", the transmission is in "D", hydraulic forward gear. lockup is inhibited.
	Customer complaint: No lever position display on the instrument panel following fault confirmation and starting impossible. If the engine is already running when the fault occurs, there is jolting when shifting from "P" or "N" to "R" or "D". Fault warning light comes on.
	Use the Wiring Diagrams Technical Note, ESPACE IV ph2.

If the fault is stored

Note:
It is possible to produce this fault if the driver or operator voluntarily keep the lever between two normal positions for longer than **2 seconds**.

Check sensor operation:
Establish consistency between the position of contacts under the **CLIP (ET012 "Gear lever position")** and the position displayed on the instrument panel.

Check the condition and setting of the control (see **MR 405 Mechanical, 37A, Automatic gear controls, Adjustment**) and the mountings connecting the lever to the transmission.

If the fault remains **stored**, do not replace the sensor.

AFTER REPAIR	Deal with any other faults. Clear the fault memory. Switch off the ignition, wait **1 minute** and carry out a road test followed by another check with the **diagnostic tool**.

GETtheMANUALS.org

DF067 CONTINUED 1	

If the fault is present

Look for any damage to the wiring harness, and check the condition and connection of the **transmission computer** and **multifunction switch** connectors.
If there is a repair procedure (see **Technical Note 6015A, Repairing electrical wiring, Wiring: Precautions for repair**), repair the wiring, otherwise replace it.

Check for **+ after ignition feed** on connection **AP4** of component **779**.

Is the **+ after ignition feed** still present?
If YES, move on to **step 1**.
If NO, move on to **step 3**.

Step 1:

Disconnect the connector from component **119**, check the **insulation** and **continuity** of the following connections (on the connector of component **119**):
Position of gear lever = **P**:
- Connection code **5DF**,
- Connection code **AP4**.

Position of gear lever = **R**:
- Connection code **5DG**,
- Connection code **AP4**.

Position of gear lever = **N**:
- Connection code **5DH**,
- Connection code **AP4**.

Position of gear lever = **N**:
- Connection code **5DJ**,
- Connection code **AP4**.

If the connection or connections are faulty and there is a repair procedure (see **Technical Note 6015A, Electrical wiring repair, Wiring: Precautions for repair**), repair the wiring, otherwise replace it.

If the **continuity and insulation** are correct, contact the Techline.

Are the **continuity and insulation** correct?
If YES and if the fault is present, contact the Techline.
If NO, check the intermediate connector **R22** and move on to **step 2**.

AFTER REPAIR	Deal with any other faults. Clear the fault memory. Switch off the ignition, wait **1 minute** and carry out a road test followed by another check with the **diagnostic tool**.

GETtheMANUALS.org

DF067 CONTINUED 2	

Step 2:

If the **continuity and insulation** are not correct, disconnect the connector from component **779**, check **the continuity and insulation** of the following connections (on the connector of component **779**):
Position of gear lever = **P**:
- Connection code **5DF**,
- Connection code **AP4**.

Position of gear lever = **R**:
- Connection code **5DG**,
- Connection code **AP4**.

Position of gear lever = **N**:
- Connection code **5DH**,
- Connection code **AP4**.

Position of gear lever = **N**:
- Connection code **5DJ**,
- Connection code **AP4**.

If the connection or connections are faulty and there is a repair procedure (see **Technical Note 6015A, Electrical wiring repair, Wiring: Precautions for repair**), repair the wiring, otherwise replace it.

Are the **continuity and insulation** correct?
If YES, replace the external wiring harness on the automatic transmission.
If NO, replace the multifunction switch.

If the fault is still present, contact the Techline.

Stage 3:

Check **the continuity and insulation** of the following connection:
- Connection code **AP4** between components **119 and 1337**.

If the connection or connections are faulty and there is a repair procedure (see **Technical Note 6015A, Electrical wiring repair, Wiring: Precautions for repair**), repair the wiring, otherwise replace it.

Check for **+ after ignition feed** on connection **AP4** of component **1337**.

Is the **+ after ignition feed** still present?
If YES, move on to **step 1**.
If NO (see **87G, Engine compartment connection unit**).
If the fault is still present, contact the Techline.

AFTER REPAIR	Deal with any other faults. Clear the fault memory. Switch off the ignition, wait **1 minute** and carry out a road test followed by another check with the **diagnostic tool**.

GETtheMANUALS.org

DF084 PRESENT OR STORED	MULTIPLEX NETWORK 1.DEF : No multiplex frameworks or invalid values (signal producing computer fault or CAN connection fault).

NOTES	**Conditions for applying fault finding procedures to stored faults:** The fault is declared present after **+ APC**.
	Effect on system: Engine does not start. Appearance of fault **DF236 Invalid engine multiplex signal**. lockup is inhibited. Note: the effects of the fault disappear immediately after the ignition is switched off and back on again.
	Customer complaints: Engine does not start. If the fault occurs while driving, the transmission engages fixed 5th gear. Restarting in fixed 3rd gear (no more gear changes). Fault warning light comes on. Note: the effects of the fault disappear immediately after the ignition is switched off and back on again.
	Use the Wiring Diagrams Technical Note, ESPACE IV ph2.

Run a multiplex network test (see **88B, Multiplex**).

Check **the continuity and insulation against earth** of the following connections:
- Connection code **3MS**,
- Connection code **3MT**.

Between components **119 and 120**.
If the connection or connections are faulty and there is a repair procedure (see **Technical Note 6015A, Electrical wiring repair, Wiring: Precautions for repair**), repair the wiring, otherwise replace it.

If the fault is still present, contact the Techline.

AFTER REPAIR	Deal with any other faults. Clear the fault memory. Switch off the ignition, wait **1 minute** and carry out a road test followed by another check with the **diagnostic tool**.

GETtheMANUALS.org

DF085 PRESENT OR STORED	EVS1 SEQUENCE SOLENOID VALVE CIRCUIT CC.0 : Short circuit to earth. CO.1 : Open circuit or short circuit to + 12 V.

NOTES	**Conditions for applying fault finding procedures to stored faults:** The fault is declared present after: **– in the event of short circuit+:** Lever in "Drive" position, Gear engaged = 1, 2, 3, 4, **and** inconsistency between the status of the solenoid valve command and the command voltage. **– in the event of open circuit:** Lever in "Drive" position, Gear engaged = 1, 2, 3, 4, **and** inconsistency between the status of the solenoid valve command and the command voltage. **– in the event of short circuit-:** Lever in "Drive" position, Gear engaged = 5, 6, **and** inconsistency between the status of the solenoid valve command and the command voltage. **OR** Running command **AC002 "Sequence solenoid valve 1"**
	Effect on system: **– in the event of short circuit+:** Neutral engaged. lockup inhibited. **– in the event of open circuit:** lockup inhibited. **– in the event of short circuit-:** No effect.
	Customer complaint: **– in the event of short circuit+:** If the fault occurs while driving, the transmission engages fixed 5th gear. Restarting is in 5th gear. Fault warning light comes on. **– in the event of open circuit:** If the fault occurs while driving, the transmission engages fixed 5th gear. Restarting is in 5th gear. Fault warning light comes on. **– in the event of short circuit-:** No effect.
	Use the Wiring Diagrams Technical Note, ESPACE IV ph2.

Look for any damage to the wiring harness, and check the condition and connection of the **automatic transmission computer** and the **hydraulic distributor** connectors.
If the connection or connections are faulty and there is a repair procedure (see **Technical Note 6015A, Electrical wiring repair, Wiring: Precautions for repair**), repair the wiring, otherwise replace it.

AFTER REPAIR	Deal with any other faults. Clear the fault memory. Switch off the ignition, wait **1 minute** and carry out a road test followed by another check with the **diagnostic tool**.

GETtheMANUALS.org

DF085 CONTINUED 1	

Check for **+ after ignition feed** on connection **5LW** of component **754**.

Is the **+ after ignition feed** still present?
If YES, move on to **step 1**.
If NO, move on to **step 8**.

Step 1:

Disconnect the connector from component **119**, measure the **resistance of sequence solenoid valve 1** (on the connector of component **119**) between the following connections:
- Connection code **5CX**,
- Connection code **5LW**.

The **resistance** should be **28 Ω ± 2.8 Ω at 20 °C**.

Is the **resistance** correct?
If YES, contact the Techline.
If NO, move on to **step 2**.

Step 2:

Disconnect connector **R22** and check **continuity and insulation** of the following connections:
- Connection code **5CX**,
- Connection code **5LW**.

Between component 119 and connector R22.
If the connection or connections are faulty and there is a repair procedure (see **Technical Note 6015A, Electrical wiring repair, Wiring: Precautions for repair**), repair the wiring, otherwise replace it.

Are the **continuity and insulation** correct?
If YES, move on to **step 3**.
If NO, replace the **external wiring harness** on the automatic transmission.

AFTER REPAIR	Deal with any other faults. Clear the fault memory. Switch off the ignition, wait **1 minute** and carry out a road test followed by another check with the **diagnostic tool**.

GETtheMANUALS.org

DF085 CONTINUED 2	

Stage 3:

Measure the **resistance of sequence solenoid valve 1** (on connector **R22**) between the following connections:
- Connection code **5CX**,
- Connection code **5LW**,

The **resistance** should be **28 Ω ± 2.8 Ω at 20 °C**.

Is the **resistance** correct?
If YES, and if the fault is present, contact the Techline.
If NO, move on to **step 4**.

Stage 4:

Drain the automatic transmission (see **MR 405, Mechanical, 23A Automatic transmission, Oil change**) and remove the transmission housing (see **MR 405, Mechanical, 23A Automatic transmission, Hydraulic distributor**).
Disconnect the connector of component **754**, measure the **resistance of sequence solenoid valve 1** (on the connector of the **internal wiring harness of the transmission**) between the following connections:
- Connection code **5CX**,
- Connection code **5LW**.

The **resistance** should be **28 Ω ± 2.8 Ω at 20 °C**.

Is the **resistance** correct?
If YES, move on to **step 5**.
If NO, move on to **step 6**.

Stage 5:

Measure the **continuity and insulation** of the following connections:
- Connection code **5CX**,
- Connection code **5LW**.

Between connector **R22 and the internal connector in the transmission**.

Are the **continuity and insulation** correct?
If YES, contact the Techline.
If NO, replace the intermediate wiring harness between connector **R22** and the **internal** connector in the transmission.

AFTER REPAIR	Deal with any other faults. Clear the fault memory. Switch off the ignition, wait **1 minute** and carry out a road test followed by another check with the **diagnostic tool**.

GETtheMANUALS.org

DF085 CONTINUED 3	

Stage 6:

Disconnect the connector of **sequence solenoid valve 1**, measure the **resistance of sequence solenoid valve 1** between the following connections:
- Connection code **5CX**,
- Connection code **5LW**.

The **resistance** should be **28 Ω ± 2.8 Ω at 20 °C**.

Is the **resistance** correct?
If YES, move on to **step 7**.
If NO, replace the hydraulic distributor.

Step 7:

Measure the **continuity and insulation** of the following connections:
- Connection code **5CX**,
- Connection code **5LW**.

Between **sequence solenoid valve 1** and the **internal connector on the transmission**.

Are the **continuity and insulation** correct?
If YES, contact the Techline.
If NO, replace the internal wiring harness on the automatic transmission.

Step 8:

Check **the continuity and insulation** of the following connection:
- Connection code **5LW** between components **119 and 754**.

If the connection or connections are faulty and there is a repair procedure (see **Technical Note 6015A, Electrical wiring repair, Wiring: Precautions for repair**), repair the wiring, otherwise replace it.

If **+ after ignition feed** is not present after checking the **feeds and earths** on the transmission computer, contact the Techline.

AFTER REPAIR	Deal with any other faults. Clear the fault memory. Switch off the ignition, wait **1 minute** and carry out a road test followed by another check with the **diagnostic tool**.

GETtheMANUALS.org

DF086 PRESENT OR STORED	EVS2 SEQUENCE SOLENOID VALVE CIRCUIT CC.0 : Short circuit to earth. CO.1 : Short circuit or open circuit to + 12 V

NOTES	**Conditions for applying fault finding procedures to stored faults:** The fault is declared present after: **– in the event of short circuit+:** Lever in "Drive" position, Gear engaged = 2, 3, 4, 5, 6, **and** inconsistency between the status of the solenoid valve command and the command voltage. **– in the event of open circuit:** Lever in "Drive" position, lockup closed, gear engaged = 2, 3, 4, 5, 6, **and** inconsistency between the status of the solenoid valve command and the command voltage. **– in the event of short circuit-:** Lever in "Drive" position, lockup open, gear engaged = 1, 2, 3, 4, 5, 6, **OR** 1st gear with engine braking, **and** inconsistency between the status of the solenoid valve command and the command voltage. **OR** Running command AC003 **"Shift solenoid 2"**.
	Effect on system: **– in the event of short circuit+:** If the fault appears with the lockup closed, gear engaged in "Drive" position = 2, 3, 4, 5, 6, automatic transmission is locked. **– in the event of open circuit:** lockup inhibited. **– in the event of short circuit-:** Risk of stalling in 1st with engine braking. lockup inhibited.
	Customer complaint: If the fault occurs while driving, the transmission engages fixed 5th gear. Restarting is in 3rd gear. Fault warning light comes on.
	Use the Wiring Diagrams Technical Note, ESPACE IV ph2.

Look for any damage to the harness and check the condition and connection of the **automatic transmission computer** and **automatic transmission** connectors.
If the connection or connections are faulty and there is a repair procedure (see **Technical Note 6015A, Electrical wiring repair, Wiring: Precautions for repair**), repair the wiring, otherwise replace it.

Check for **+ after ignition feed** on connection **5LW** of component **754**.

If **+ after ignition feed is present, move on to step 1**.
If **+ after ignition feed is not present, move on to step 8**.

AFTER REPAIR	Deal with any other faults. Clear the fault memory. Switch off the ignition, wait **1 minute** and carry out a road test followed by another check with the **diagnostic tool**.

GETtheMANUALS.org

DF086 CONTINUED 1	

Step 1:

Disconnect the connector from component **119**, measure the **resistance of sequence solenoid valve 2** (on the connector of component **119**) between the following connections:
- Connection code **5CY**,
- Connection code **5LW**.

The **resistance** should be **28 Ω ± 2.8 Ω at 20 °C**.

Is the **resistance** correct?
If YES, contact the Techline.
If NO, move on to **step 2**.

Step 2:

Disconnect connector **R22** and check **continuity and insulation** of the following connections:
- Connection code **5CY**,
- Connection code **5LW**.

Between component 119 and connector R22.
If the connection or connections are faulty and there is a repair procedure (see **Technical Note 6015A, Electrical wiring repair, Wiring: Precautions for repair**), repair the wiring, otherwise replace it.

Are the **continuity and insulation** correct?
If YES, move on to **step 3**.
If NO, replace the **external wiring harness** on the automatic transmission.

Stage 3:

Measure the **resistance of sequence solenoid valve 2** (on connector **R22**) between the following connections:
- Connection code **5CY**,
- Connection code **5LW**,

The **resistance** should be **28 Ω ± 2.8 Ω at 20 °C**.

Is the **resistance** correct?
If YES, and if the fault is still present, contact the Techline.
If NO, move on to **step 4**.

AFTER REPAIR	Deal with any other faults. Clear the fault memory. Switch off the ignition, wait **1 minute** and carry out a road test followed by another check with the **diagnostic tool**.

GETtheMANUALS.org

DF086 CONTINUED 2	

Stage 4:

Drain the automatic transmission (see **MR 405, Mechanical, 23A Automatic transmission, Oil change**) and remove the transmission housing (see **MR 405, Mechanical, 23A Automatic transmission, Hydraulic distributor**).
Disconnect the connector of component **754**, measure the **resistance of sequence solenoid valve 2** (on the connector of the **internal wiring harness of the transmission**) between the following connections:

- Connection code **5CY**,
- Connection code **5LW**.

The **resistance** should be **28 Ω ± 2.8 Ω at 20 °C**.

Is the **resistance** correct?
If YES, move on to **step 5**.
If NO, move on to **step 6**.

Stage 5:

Measure the **continuity and insulation** of the following connections:

- Connection code **5CY**,
- Connection code **5LW**.

Between connector **R22 and the internal connector in the transmission**.

Are the **continuity and insulation** correct?
If YES, contact the Techline.
If NO, replace the intermediate wiring harness between connector **R22** and the **internal** connector in the transmission.

Stage 6:

Disconnect the connector from **sequence solenoid valve 2**, measure the **resistance of sequence solenoid valve 2** between the following connections:

- Connection code **5CY**,
- Connection code **5LW**.

The **resistance** should be **28 Ω ± 2.8 Ω at 20 °C**.

Is the **resistance** correct?
If YES, move on to **step 7**.
If NO, replace the hydraulic distributor.

AFTER REPAIR	Deal with any other faults. Clear the fault memory. Switch off the ignition, wait **1 minute** and carry out a road test followed by another check with the **diagnostic tool**.

GETtheMANUALS.org

DF086 CONTINUED 3	

Step 7:

Measure the **continuity and insulation** of the following connections:
- Connection code **5CY**,
- Connection code **5LW**.

Between **sequence solenoid valve 2** and the **internal connector on the transmission**.

Are the **continuity and insulation** correct?
If YES, contact the Techline.
If NO, replace the internal wiring harness on the automatic transmission.

Step 8:

Check **the continuity and insulation** of the following connection:
- Connection code **5LW** between components **119 and 754**.

If the connection or connections are faulty and there is a repair procedure (see **Technical Note 6015A, Electrical wiring repair, Wiring: Precautions for repair**), repair the wiring, otherwise replace it.

If **+ after ignition feed** is not present after checking the **feeds and earths** on the transmission computer, contact the Techline.

AFTER REPAIR	Deal with any other faults. Clear the fault memory. Switch off the ignition, wait **1 minute** and carry out a road test followed by another check with the **diagnostic tool**.

GETtheMANUALS.org

DF091 PRESENT OR STORED	"LS" PRESSURE REGULATION SOLENOID VALVE CIRCUIT CC.0 : Short circuit to earth. CO.1 : Open circuit or short circuit to + 12 V.

NOTES	**Conditions for applying fault finding procedures to stored faults:** The fault is declared present after: **– in the event of short circuit+ or short circuit-:** difference between current measured and solenoid valve control. **– in the event of open circuit:** Current setpoint > **625 mA**. **OR** Running command **AC086 LS* pressure regulation solenoid valve**
	Effect on system: **– in the event of short circuit+:** The line pressure is at its minimum value. **– in the event of open circuit:** The line pressure is at its maximum value. **– in the event of short circuit-:** The line pressure is at its maximum value.
	Customer complaint: **– in the event of short circuit+:** Fault warning light comes on. **– in the event of open circuit or short circuit-:** Possible increase in fuel consumption. Possible jolting during gear changes. Fault warning light comes on.
	Use the Wiring Diagrams Technical Note, ESPACE IV ph2.

Look for any damage to the harness and check the condition and connection of the **gearbox computer** and **automatic transmission** connectors.
If the connection or connections are faulty and there is a repair procedure (see **Technical Note 6015A, Electrical wiring repair, Wiring: Precautions for repair**), repair the wiring, otherwise replace it.

Check for **+ after ignition feed** on connection **5LW** of component **754**.

If **+ after ignition feed is present, move on to step 1**.
If **+ after ignition feed is not present, move on to step 8**.

*LS:

AFTER REPAIR	Deal with any other faults. Clear the fault memory. Switch off the ignition, wait **1 minute** and carry out a road test followed by another check with the **diagnostic tool**.

GETtheMANUALS.org

DF091 CONTINUED 1	

Step 1:

Disconnect the connector from component **119**, measure the **resistance of the LS pressure regulation solenoid valve** (on the connector of component **119**) between the following connections:
- Connection code **5BU**,
- Connection code **5LW**.

The **resistance** should be **5.3 Ω ± 0.5 Ω at 20 °C**.

Is the **resistance** correct?
If YES, contact the Techline.
If NO, move on to **step 2**.

Step 2:

Disconnect connector **R22** and check **continuity and insulation** of the following connections:
- Connection code **5BU**,
- Connection code **5LW**.

Between component 119 and connector R22.
If the connection or connections are faulty and there is a repair procedure (see **Technical Note 6015A, Electrical wiring repair, Wiring: Precautions for repair**), repair the wiring, otherwise replace it.

Are the **continuity and insulation** correct?
If YES, move on to **step 3**.
If NO, replace the **external wiring harness** on the automatic transmission.

Stage 3:

Measure the **resistance of the LS pressure regulation solenoid valve** (on connector **R22**) between the following connections:
- Connection code **5BU**,
- Connection code **5LW**.

The **resistance** should be **5.3 Ω ± 0.5 Ω at 20 °C**.

Is the **resistance** correct?
If YES, and if the fault is present, contact the Techline.
If NO, move on to **step 4**.

AFTER REPAIR	Deal with any other faults. Clear the fault memory. Switch off the ignition, wait **1 minute** and carry out a road test followed by another check with the **diagnostic tool**.

GETtheMANUALS.org

DF091 CONTINUED 2	

Stage 4:

Drain the automatic transmission (see **MR 405, Mechanical, 23A Automatic transmission, Oil change**) and remove the transmission housing (see **MR 405, Mechanical, 23A Automatic transmission, Hydraulic distributor**).
Disconnect the connector from component **754**, measure the **resistance of the LS pressure regulation solenoid valve** (on the connector of the **internal wiring harness of the transmission**) between the following connections:

- Connection code **5BU**,
- Connection code **5LW**.

The **resistance** should be **5.3 Ω ± 0.5 Ω at 20 °C**.

Is the **resistance** correct?
If YES, move on to **step 5**.
If NO, move on to **step 6**.

Stage 5:

Measure the **continuity and insulation** of the following connections:

- Connection code **5BU**,
- Connection code **5LW**.

Between connector **R22 and the internal connector in the transmission**.

Are the **continuity and insulation** correct?
If YES, contact the Techline.
If NO, replace the intermediate wiring harness between connector **R22** and the **internal** connector in the transmission.

Stage 6:

Disconnect the connector from the **LS pressure regulation solenoid valve resistor**, measure the **LS pressure regulation solenoid valve resistor** between the following connections:

- Connection code **5BU**,
- Connection code **5LW**.

The **resistance** should be **5.3 Ω ± 0.5 Ω at 20 °C**.

Is the **resistance** correct?
If YES, move on to **step 7**.
If NO, replace the hydraulic distributor.

AFTER REPAIR	Deal with any other faults. Clear the fault memory. Switch off the ignition, wait **1 minute** and carry out a road test followed by another check with the **diagnostic tool**.

GETtheMANUALS.org

DF091 CONTINUED 3	

Step 7:

Measure the **continuity and insulation** of the following connections:
- Connection code **5BU**,
- Connection code **5LW**.

Between **LS pressure regulation solenoid valve** and the **internal connector on the transmission**.

Are the **continuity and insulation** correct?
If YES, contact the Techline.
If NO, replace the internal wiring harness on the automatic transmission.

Step 8:

Check **the continuity and insulation** of the following connection:
- Connection code **5LW** between components **119 and 754**.

If the connection or connections are faulty and there is a repair procedure (see **Technical Note 6015A, Electrical wiring repair, Wiring: Precautions for repair**), repair the wiring, otherwise replace it.

If **+ after ignition feed** is not present after checking the **feeds and earths** on the transmission computer, contact the Techline.

AFTER REPAIR	Deal with any other faults. Clear the fault memory. Switch off the ignition, wait **1 minute** and carry out a road test followed by another check with the **diagnostic tool**.

GETtheMANUALS.org

DF093 PRESENT OR STORED	MANUAL SEQUENTIAL CONTROLS CIRCUIT CC.0 : Short circuit to earth

NOTES	**Conditions for applying fault finding procedures to stored faults:** The fault is declared present after: Lever in position “P”, “R” or “N”. Gear lever in position “M+” or “M-”.
	Effect on system: Impulse mode inhibited.
	Customer complaint: Impulse mode inhibited. "Drive" position displayed on the instrument panel if the lever is in "Manual" position.
	Use the Wiring Diagrams Technical Note, ESPACE IV ph2.

Look for any damage to the harness and check the condition and connection of the connectors on the automatic transmission computer and on the **shift pattern control**.
If the connection or connections are faulty and there is a repair procedure (see **Technical Note 6015A, Electrical wiring repair, Wiring: Precautions for repair**), repair the wiring, otherwise replace it.

Check for **earth** on connection **N+** of component **129**.

Check **the continuity and insulation against earth** of the following connections:
- Connection code **5H**,
- Connection code **5FM**.

Between components **119 and 129.**
If the connection or connections are faulty and there is a repair procedure (see **Technical Note 6015A, Electrical wiring repair, Wiring: Precautions for repair**), repair the wiring, otherwise replace it.

In the event of a fault, replace the **shift pattern control**.

AFTER REPAIR	Deal with any other faults. Clear the fault memory. Switch off the ignition, wait **1 minute** and carry out a road test followed by another check with the **diagnostic tool**.

GETtheMANUALS.org

DF095 PRESENT OR STORED	SELECTOR LEVER LOCK ELECTROMAGNET CIRCUIT CC.0 : Short circuit to earth. CO.1 : Open circuit or short circuit to + 12 V.

NOTES	**Conditions for applying fault finding procedures to stored faults:** The fault is declared present after: **– in the event of open circuit or short circuit-:** Lever in position “P” (without pressing the brake pedal), “R”, “N”, “D” or “M”. **– in the event of short circuit+:** Lever in position “P” (and depressing the brake pedal).
	Customer complaint: The shift-lock solenoid valve is always activated: therefore, no locking of lever.
	Use the Wiring Diagrams Technical Note, ESPACE IV ph2.

CC.0	***NOTES***	None

Look for any damage to the harness and check the condition and connection of the connectors on the **automatic transmission computer** and on the **shift pattern control**. If the connection or connections are faulty and there is a repair procedure (see **Technical Note 6015A, Electrical wiring repair, Wiring: Precautions for repair**), repair the wiring, otherwise replace it.
Check **the insulation to earth and continuity** of the following connection: – Connection code **5DU** between components **119 and 129**. If the connection or connections are faulty and there is a repair procedure (see **Technical Note 6015A, Electrical wiring repair, Wiring: Precautions for repair**), repair the wiring, otherwise replace it.
In the event of a fault, replace the **shift pattern control**.

AFTER REPAIR	Deal with any other faults. Clear the fault memory. Switch off the ignition, wait **1 minute** and carry out a road test followed by another check with the **diagnostic tool**.

GETtheMANUALS.org

DF095 CONTINUED	

CO.1	***NOTES***	None

Look for any damage to the harness and check the condition and connection of the connectors on the **gearbox computer** and on the **shift pattern control**. If the connection or connections are faulty and there is a repair procedure (see **Technical Note 6015A, Electrical wiring repair, Wiring: Precautions for repair**), repair the wiring, otherwise replace it.
Check for **+ after ignition feed** on connection **AP*** of component **129**.
Check for **earth** on connection **N+** of component **129**.
Check the **continuity and insulation against the + 12 V feed** of the following connection: – Connection code **5DU** between components **119 and 129**. If the connection or connections are faulty and there is a repair procedure (see **Technical Note 6015A, Electrical wiring repair, Wiring: Precautions for repair**), repair the wiring, otherwise replace it.
In the event of a fault, replace the **shift pattern control**.

AFTER REPAIR	Deal with any other faults. Clear the fault memory. Switch off the ignition, wait **1 minute** and carry out a road test followed by another check with the **diagnostic tool**.

GETtheMANUALS.org

DF097 PRESENT OR STORED	CONVERTER LOCKUP 1.DEF : CONVERTER LOCKUP CONTROL

NOTES	**Order of priority in the event of more than one fault:** If there is a combination of the following faults: – **DF097, DF086 EVS2* sequence solenoid valve circuit and DF306 "Brake/ lockup 1 solenoid valve circuit",** deal with faults **DF086 EVS2* sequence solenoid valve circuit and DF306 Brake/lockup 1 solenoid valve circuit".**
	Conditions for applying fault finding procedures to stored faults: The fault is declared present after: **If in lockup:** Lever in Manual position, and difference in *slippage speed ≥ 40 + Vehicle speed / 2 for a certain time and EVS2* solenoid valve control status > 95 %. **In the event of slippage:** Lever in Manual position, and difference in slippage speed ≥ 40 + Slippage speed setpoint for a certain time, and EVS2* solenoid valve control status > 95 %. ● slippage = engine speed - turbine speed Note: The detection time is **30 seconds**.
	Effect on system: Increase in oil temperature. – In the event of engagement fault, lockup inhibited. – In the event of a slippage fault, lockup slippage is inhibited.
	Customer complaint: Warning light on.
	Use the Wiring Diagrams Technical Note, ESPACE IV ph2.

***EVS2 = sequence solenoid valve 2**

AFTER REPAIR	Deal with any other faults. Clear the fault memory. Switch off the ignition, wait **1 minute** and carry out a road test followed by another check with the **diagnostic tool**.

GETtheMANUALS.org

DF097 CONTINUED 1	

Fault finding on **sequence solenoid valve 2**:

Look for any damage to the harness and check the condition and connection of the gearbox computer and on the **automatic transmission** connectors.
If the connection or connections are faulty and there is a repair procedure (see **Technical Note 6015A, Electrical wiring repair, Wiring: Precautions for repair**), repair the wiring, otherwise replace it.

Check for **+ after ignition feed** on connection **5LW** of component **754**.

If **+ after ignition feed is present, move on to step 1**.
If **+ after ignition feed is not present, move on to step 8**.

Step 1:

Disconnect the connector from component **119**, measure the **resistance of sequence solenoid valve 2** (on the connector of component **119**) between the following connections:
- Connection code **5CY**,
- Connection code **5LW**.

The **resistance** should be **28 Ω ± 2.8 Ω at 20 °C**.

Is the **resistance** correct?
If YES, contact the Techline.
If NO, move on to **step 2**.

Step 2:

Disconnect connector **R22** and check **continuity and insulation** of the following connections:
- Connection code **5CY**,
- Connection code **5LW**.

Between component 119 and connector R22.
If the connection or connections are faulty and there is a repair procedure (see **Technical Note 6015A, Electrical wiring repair, Wiring: Precautions for repair**), repair the wiring, otherwise replace it.

Are the **continuity and insulation** correct?
If YES, move on to **step 3**.
If NO, replace the **external wiring harness** on the automatic transmission.

AFTER REPAIR	Deal with any other faults. Clear the fault memory. Switch off the ignition, wait **1 minute** and carry out a road test followed by another check with the **diagnostic tool**.

GETtheMANUALS.org

DF097 CONTINUED 2	

Stage 3:

Measure the **resistance of sequence solenoid valve 2** (on connector **R22**) between the following connections:
- Connection code **5CY**,
- Connection code **5LW**.

The **resistance** should be **28 Ω ± 2.8 Ω at 20 °C**.

Is the **resistance** correct?
If YES, and if the fault is still present, contact the Techline.
If NO, move on to **step 4**.

Stage 4:

Drain the automatic transmission (see **MR 405, Mechanical, 23A Automatic transmission, Oil change**) and remove the transmission housing (see **MR 405, Mechanical, 23A Automatic transmission, Hydraulic distributor**).
Disconnect the connector from component **754**, measure the **resistance of sequence solenoid valve 2** (on the connector of the **internal wiring harness of the transmission**) between the following connections:
- Connection code **5CY**,
- Connection code **5LW**.

The **resistance** should be **28 Ω ± 2.8 Ω at 20 °C**.

Is the **resistance** correct?
If YES, move on to **step 5**.
If NO, move on to **step 6**.

Stage 5:

Measure the **continuity and insulation** of the following connections:
- Connection code **5CY**,
- Connection code **5LW**.

Between connector **R22 and the internal connector in the transmission**.

Are the **continuity and insulation** correct?
If YES, contact the Techline.
If NO, replace the intermediate wiring harness between connector **R22** and the **internal** connector in the transmission.

AFTER REPAIR	Deal with any other faults. Clear the fault memory. Switch off the ignition, wait **1 minute** and carry out a road test followed by another check with the **diagnostic tool**.

GETtheMANUALS.org

DF097 CONTINUED 3	

Stage 6:

Disconnect the connector from **sequence solenoid valve 2**, measure the **resistance of sequence solenoid valve 2** between the following connections:

- Connection code **5CY**,
- Connection code **5LW**.

The **resistance** should be **28 Ω ± 2.8 Ω at 20 °C**.

Is the **resistance** correct?
If YES, move on to **step 7**.
If NO, replace the hydraulic distributor.

Step 7:

Measure the **continuity and insulation** of the following connections:

- Connection code **5CY**,
- Connection code **5LW**.

Between **sequence solenoid valve 2** and the **internal connector on the transmission**.

Are the **continuity and insulation** correct?
If YES, contact the Techline.
If NO, replace the internal wiring harness on the automatic transmission.

Step 8:

Check **the continuity and insulation** of the following connection:

- Connection code **5LW** between components **119 and 754**.

If the connection or connections are faulty and there is a repair procedure (see **Technical Note 6015A, Electrical wiring repair, Wiring: Precautions for repair**), repair the wiring, otherwise replace it.

If **+ after ignition feed** is not present after checking the **feeds and earths** on the transmission computer, contact the Techline.

AFTER REPAIR	Deal with any other faults. Clear the fault memory. Switch off the ignition, wait **1 minute** and carry out a road test followed by another check with the **diagnostic tool**.

GETtheMANUALS.org

DF097 CONTINUED 4	

Fault finding on **lockup/brake solenoid valve 1**:

Look for any damage to the harness and check the condition and connection of the **gearbox computer** and on the **automatic transmission** connectors.
If the connection or connections are faulty and there is a repair procedure (see **Technical Note 6015A, Electrical wiring repair, Wiring: Precautions for repair**), repair the wiring, otherwise replace it.

Check for **+ after ignition feed** on connection **5LW** of component **754**.

If **+ after ignition feed is present, move on to step 1**.
If **+ after ignition feed is not present, move on to step 8**.

Step 1:

Disconnect the connector from component **119**, measure the **resistance of the lockup/brake 1 solenoid valve** (on the connector of component **119**) between the following connections:
- Connection code **5BF**,
- Connection code **5LW**.

The **resistance** should be **5.3 Ω ± 0.5 Ω at 20 °C**.

Is the **resistance** correct?
If YES, contact the Techline.
If NO, move on to **step 2**.

Step 2:

Disconnect connector **R22** and check **continuity and insulation** of the following connections:
- Connection code **5BF**,
- Connection code **5LW**.

Between component 119 and connector R22.
If the connection or connections are faulty and there is a repair procedure (see **Technical Note 6015A, Electrical wiring repair, Wiring: Precautions for repair**), repair the wiring, otherwise replace it.

Are the **continuity and insulation** correct?
If YES, move on to **step 3**.
If NO, replace the **external wiring harness** on the automatic transmission.

AFTER REPAIR	Deal with any other faults. Clear the fault memory. Switch off the ignition, wait **1 minute** and carry out a road test followed by another check with the **diagnostic tool**.

GETtheMANUALS.org

DF097 CONTINUED 5	

Stage 3:

Measure the **resistance of lockup/brake 1 solenoid valve** (on connector **R22**) between the following connections:

- Connection code **5BF**,
- Connection code **5LW**.

The **resistance** should be **5.3 Ω ± 0.5 Ω at 20 °C**.

Is the **resistance** correct?
If YES, and if the fault is still present, contact the Techline.
If NO, move on to **step 4**.

Stage 4:

Drain the automatic transmission (see **MR 405, Mechanical, 23A Automatic transmission, Oil change**) and remove the transmission housing (see **MR 405, Mechanical, 23A Automatic transmission, Hydraulic distributor**).
Disconnect the connector from component **754**, measure the **resistance of lockup/brake 1 solenoid valve** (on the connector of the **internal wiring harness of the transmission**) between the following connections:

- Connection code **5BF**,
- Connection code **5LW**.

The **resistance** should be **5.3 Ω ± 0.5 Ω at 20 °C**.

Is the **resistance** correct?
If YES, move on to **step 5**.
If NO, move on to **step 6**.

Stage 5:

Measure the **continuity and insulation** of the following connections:

- Connection code **5BF**,
- Connection code **5LW**.

Between connector **R22 and the internal connector in the transmission**.

Are the **continuity and insulation** correct?
If YES, contact the Techline.
If NO, replace the intermediate wiring harness between connector **R22** and the **internal** connector in the transmission.

AFTER REPAIR	Deal with any other faults. Clear the fault memory. Switch off the ignition, wait **1 minute** and carry out a road test followed by another check with the **diagnostic tool**.

GETtheMANUALS.org

DF097 CONTINUED 6	

Stage 6:

Disconnect the connector from **lockup/brake 1 solenoid valve**, measure the **resistance of lockup/brake 1 solenoid valve** between the following connections:
- Connection code **5BF**,
- Connection code **5LW**.

The **resistance** should be **5.3 Ω ± 0.5 Ω at 20 ˚C**.

Is the **resistance** correct?
If YES, move on to **step 7**.
If NO, replace the hydraulic distributor.

Step 7:

Measure the **continuity and insulation** of the following connections:
- Connection code **5BF**,
- Connection code **5LW**.

Between **lockup/brake 1 solenoid valve** and the **internal connector on the transmission**.

Are the **continuity and insulation** correct?
If YES, contact the Techline.
If NO, replace the internal wiring harness on the automatic transmission.

Step 8:

Check **the continuity and insulation** of the following connection:
- Connection code **5LW** between components **119 and 754**.

If the connection or connections are faulty and there is a repair procedure (see **Technical Note 6015A, Electrical wiring repair, Wiring: Precautions for repair**), repair the wiring, otherwise replace it.

If **+ after ignition feed** is not present after checking the **feeds and earths** on the transmission computer, contact the Techline.

AFTER REPAIR	Deal with any other faults. Clear the fault memory. Switch off the ignition, wait **1 minute** and carry out a road test followed by another check with the **diagnostic tool**.

GETtheMANUALS.org

DF108 PRESENT OR STORED	AVERAGE EFFECTIVE TORQUE MULTIPLEX SIGNAL 1.DEF : Multiplex frames absent or values invalid (fault with the computer generating the signal or multiplex line connection fault)

NOTES	**Effect on system:** Lockup is inhibited (still open).
	Customer complaint: Fault warning light comes on. If the fault occurs while driving, the gearbox engages fixed 5th gear. Restarting occurs in fixed 3rd gear (no more gear changes).
	Use the Wiring Diagrams Technical Note, ESPACE IV ph2.

Run a multiplex network test (see **88B, Multiplex**).

Carry out a test on the engine management computer **(**(see **13B, Diesel injection, Conformity check**) (**EDC16 CP33 M9R 721**)**)**.

Check **the continuity and insulation against earth** of the following connections:
- Connection code **3MS**,
- Connection code **3MT**.

Between components **119 and 120**.
If the connection or connections are faulty and there is a repair procedure (see **Technical Note 6015A, Electrical wiring repair, Wiring: Precautions for repair**), repair the wiring, otherwise replace it.

If the fault is still present, contact the Techline.

AFTER REPAIR	Deal with any other faults. Clear the fault memory. Switch off the ignition, wait **1 minute** and carry out a road test followed by another check with the **diagnostic tool**.

GETtheMANUALS.org

DF171 PRESENT OR STORED	VEHICLE SPEED SENSOR CIRCUIT 1.DEF : Open circuit or short circuit

NOTES	**Conditions for applying fault finding procedures to stored faults:** The fault is declared present after a test. The vehicle speed transmitted by the multiplex line > **12 mph (20 km/h)** and the speed of transmission output sensor < **3 mph (5 km/h)** then the vehicle speed transmitted by multiplex line < **12 mph (20 km/h**).
	Effect on system: Impossible to calculate gear. lockup inhibited.
	Customer complaint: Gear on which fault occurred is fixed. Restarting in fixed 3rd gear (no more gear changes). Manual mode is inhibited. Fault warning light comes on.
	Use the Wiring Diagrams Technical Note, ESPACE IV ph2.

Look for any damage to the wiring and check the condition and connection of the connectors for components **119** and **1060**.
If the connection or connections are faulty and there is a repair procedure (see **Technical Note 6015A, Electrical wiring repair, Wiring: Precautions for repair**), repair the wiring, otherwise replace it.

Check for **+ after ignition feed** on connection **AP4** of component **1060**.

If **+ after ignition feed** is present, move on to **step 1**.
If **+ after ignition feed** is not present, **move on to step 2**.

AFTER REPAIR	Deal with any other faults. Clear the fault memory. Switch off the ignition, wait **1 minute** and carry out a road test followed by another check with the **diagnostic tool**.

GETtheMANUALS.org

DF171 CONTINUED	

Step 1:
Check **the continuity and insulation** of the following connections: ● Connection code **5TA**, ● Connection code **5T**. Between components **119 and 1060**. If the connection or connections are faulty and there is a repair procedure (see **Technical Note 6015A, Electrical wiring repair, Wiring: Precautions for repair**), repair the wiring, otherwise replace it.
Check the intermediate connector **R22**, if the fault is still present, replace component **1140**.
If the fault is still present, contact the Techline.

Step 2:
Check **the continuity and insulation** of the following connection: ● Connection code **AP4** between components **119 and 1337**. If the connection or connections are faulty and there is a repair procedure (see **Technical Note 6015A, Electrical wiring repair, Wiring: Precautions for repair**), repair the wiring, otherwise replace it.
Check for **+ after ignition feed** on connection **AP4** of component **1337**.
If **+ after ignition feed** is present, move on to **step 1**. If **+ after ignition feed** is not present (see **87G, Engine compartment connection unit**). If the fault is still present, contact the Techline.

AFTER REPAIR	Deal with any other faults. Clear the fault memory. Switch off the ignition, wait **1 minute** and carry out a road test followed by another check with the **diagnostic tool**.

GETtheMANUALS.org

DF178 PRESENT OR STORED	ACCELERATOR PEDAL POSITION 1.DEF : No multiplex frameworks or invalid values (signal producing computer fault or CAN connection fault).

NOTES	**Effect on system:** lockup inhibited. Risk of up- or downshifts.
	Customer complaint: Risk of up- or downshifts.
	Use the Wiring Diagrams Technical Note, ESPACE IV ph2.

Run a multiplex network test (see **88B, Multiplex**).

Carry out a test on the engine management computer **(**(see **13B, Diesel injection, Conformity check**) (**EDC16 CP33 M9R 721**)**)**.

If the fault is still present, contact the Techline.

AFTER REPAIR	Deal with any other faults. Clear the fault memory. Switch off the ignition, wait **1 minute** and carry out a road test followed by another check with the **diagnostic tool**.

GETtheMANUALS.org

DF183 PRESENT OR STORED	NO UCH MULTIPLEX SIGNAL 1.DEF : Multiplex frames absent or values invalid (fault with the computer generating the signal or multiplex line connection fault)

NOTES	**Effect on system:** The “alarm mode” function for an open door is not operational and the lockup is inhibited (still open).
	Use the Wiring Diagrams Technical Note, ESPACE IV ph2.

Run a multiplex network test (see **88B, Multiplex**).

Run a test on the UCH (see **87B, UCH, Fault finding**).

Check **the continuity and insulation against earth** of the following connections:
- Connection code **3MS**,
- Connection code **3MT**.

Between components **119 and 120**.
If the connection or connections are faulty and there is a repair procedure (see **Technical Note 6015A, Electrical wiring repair, Wiring: Precautions for repair**), repair the wiring, otherwise replace it.

If the fault is still present, contact the Techline.

AFTER REPAIR	Deal with any other faults. Clear the fault memory. Switch off the ignition, wait **1 minute** and carry out a road test followed by another check with the **diagnostic tool**.

GETtheMANUALS.org

DF186 PRESENT OR STORED	NO INJECTION MULTIPLEX SIGNAL 1.DEF : Multiplex frames absent or values invalid (fault with the computer generating the signal or multiplex line connection fault)

NOTES	**Customer complaint:** If the fault occurs while driving, the transmission engages fixed 5th gear. Restarting occurs in fixed 3rd gear (no more gear changes). Fault warning light comes on. The effect of the fault disappears after switching on the **+ after ignition feed** again.
	Effect on system: The line pressure is not being checked properly. The lockup is inhibited (still open). Appearance of fault **DF236 Invalid engine speed multiplex signal**. The effect of the fault disappears after switching on the **+ after ignition feed** again.
	Use the Wiring Diagrams Technical Note, ESPACE IV ph2.

Run a multiplex network test (see **88B, Multiplex**).

Carry out a test on the engine management computer **(**(see **13B, Diesel injection, Conformity check**) (**EDC16 CP33 M9R 721**)**)**.

Check **the continuity and insulation against earth** of the following connections:
- Connection code **3MS**,
- Connection code **3MT**.

Between components **119 and 120**.
If the connection or connections are faulty and there is a repair procedure (see **Technical Note 6015A, Electrical wiring repair, Wiring: Precautions for repair**), repair the wiring, otherwise replace it.

If the fault is still present, contact the Techline.

AFTER REPAIR	Deal with any other faults. Clear the fault memory. Switch off the ignition, wait **1 minute** and carry out a road test followed by another check with the **diagnostic tool**.

GETtheMANUALS.org

DF230 PRESENT OR STORED	INVALID VEHICLE SPEED MULTIPLEX SIGNAL 1.DEF : Multiplex frames absent or values invalid (fault with the computer generating the signal or multiplex line connection fault)

NOTES	**System effects:** None.
	Customer complaint: Slight reduction in handling.
	Use the Wiring Diagrams Technical Note, ESPACE IV ph2.

Run a multiplex network test (see **88B, Multiplex**).

Carry out a test on the engine management computer **(**(see **13B, Diesel injection, Conformity check**) (**EDC16 CP33 M9R 721**)**)**.

Check **the continuity and insulation against earth** of the following connections:
- Connection code **3MS**,
- Connection code **3MT**.

Between components **119 and 120**.
If the connection or connections are faulty and there is a repair procedure (see **Technical Note 6015A, Electrical wiring repair, Wiring: Precautions for repair**), repair the wiring, otherwise replace it.

If the fault is still present, contact the Techline.

AFTER REPAIR	Deal with any other faults. Clear the fault memory. Switch off the ignition, wait **1 minute** and carry out a road test followed by another check with the **diagnostic tool**.

GETtheMANUALS.org

DF236 PRESENT OR STORED	INVALID ENGINE SPEED MULTIPLEX SIGNAL 1.DEF : Multiplex frames absent or values invalid (fault with the computer generating the signal or multiplex line connection fault)

NOTES	**System effects:** The anti-stall zone has been modified. Lockup is inhibited (still open).
	Customer complaint: Engine stop or no customer complaint.
	Use the Wiring Diagrams Technical Note, ESPACE IV ph2.

Run a multiplex network test (see **88B, Multiplex**).

Carry out a test on the engine management computer **(**(see **13B, Diesel injection, Conformity check**) (**EDC16 CP33 M9R 721**)**)**.

Check **the continuity and insulation against earth** of the following connections:
- Connection code **3MS**,
- Connection code **3MT**.

Between components **119 and 120**.
If the connection or connections are faulty and there is a repair procedure (see **Technical Note 6015A, Electrical wiring repair, Wiring: Precautions for repair**), repair the wiring, otherwise replace it.

If the fault is still present, contact the Techline.

AFTER REPAIR	Deal with any other faults. Clear the fault memory. Switch off the ignition, wait **1 minute** and carry out a road test followed by another check with the **diagnostic tool**.

GETtheMANUALS.org

DF238 PRESENT OR STORED	INVALID RAW ENGINE TORQUE MULTIPLEX SIGNAL 1.DEF : Multiplex frames absent or values invalid (fault with the computer generating the signal or multiplex line connection fault)

NOTES	**System effects:** The line pressure is not being checked properly. Lockup is inhibited (still open). The effects of the fault disappear immediately after the ignition is switched off and back on again.
	Customer complaint: Fault warning light comes on. If the fault occurs while driving, the transmission engages fixed 5th gear. Restarting occurs in fixed 3rd gear (no more gear changes). The effects of the fault disappear immediately after the ignition is switched off and back on again.
	Use the Wiring Diagrams Technical Note, ESPACE IV ph2.

Run a multiplex network test (see **88B, Multiplex**).

Carry out a test on the engine management computer **(**(see **13B, Diesel injection, Conformity check**) (**EDC16 CP33 M9R 721**)**)**.

Check **the continuity and insulation against earth** of the following connections:
- Connection code **3MS**,
- Connection code **3MT**.

Between components **119 and 120**.
If the connection or connections are faulty and there is a repair procedure (see **Technical Note 6015A, Electrical wiring repair, Wiring: Precautions for repair**), repair the wiring, otherwise replace it.

If the fault is still present, contact the Techline.

* SIG:

AFTER REPAIR	Deal with any other faults. Clear the fault memory. Switch off the ignition, wait **1 minute** and carry out a road test followed by another check with the **diagnostic tool**.

GETtheMANUALS.org

DF256 PRESENT OR STORED	ERRATIC GEAR JUMPING 1.DEF : Hydraulic, mechanical or electrical fault on solenoid valves, deal with the other faults first

NOTES	**Conditions for applying fault finding procedures to stored faults:** The fault appears after: **1st scenario: when driving, Drive or Manual** the gear > gear setpoint, **and** output speed ≥ **300 rpm**, **and** turbine speed ≥ **300 rpm**, **and** engine speed ≥ turbine speed **- 50 rpm**, **and** (if 1st with engine braking, accelerator pedal ≥ **6.25 % OR,** if 1st, accelerator pedal ≥ **30.75 % OR,** if 2nd to 6th accelerator pedal ≥ **6.25 %**). **2nd scenario: when driving in reverse gear** the ratio > the ratio setpoint, **and** output speed ≥ 300 rpm, **and** turbine speed ≥ **300 rpm**, **and** engine speed ≥ turbine speed **- 50 rpm**, **and** accelerator pedal ≥ **6.25 %**. **3rd case: stationary, in Drive or in Manual** The difference between the engine speed and mapping > threshold, **and** the engine speed increases constantly for **250 ms**. **4th case: stationary, reverse gear** The difference between the engine speed and mapping > 0, **and** the engine speed increases constantly for **250 ms**.
	System effects: No engine torque transmitted to wheels. Switch to defect mode occurs during vehicle speed safety conditions (vehicle speed < **32 mph (54 km/h)**). The system effects will vary depending on which solenoid valve is faulty: – If caused by brake 2 solenoid valve, system switches to fixed 2nd, 3rd or 5th gear safe mode. – If caused by clutch 2 solenoid valve, system switches to fixed 2nd, 3rd or 6th gear safe mode. – If caused by the clutch 3 solenoid valve, system switches to fixed 2nd, 3rd, 4th or 5th gear safe mode. – If caused by clutch 1 solenoid valve, system switches to fixed 3rd, 5th or 6th gear safe mode. In all cases, restarting is in 3rd gear. If vehicle stopped in Drive, system switches to fixed 5th gear if engine speed is lower than **2000 rpm**. If vehicle stopped in “R” mode, switching to “R” mode is done if engine speed is less than **2000 rpm**. In reverse, moving off when "kick-down" detected.

Note:
To accurately locate components (see **Location of components**).

AFTER REPAIR	Deal with any other faults. Clear the fault memory. Switch off the ignition, wait **1 minute** and carry out a road test followed by another check with the **diagnostic tool**.

GETtheMANUALS.org

DF256 **CONTINUED 1**	

NOTES	**Customer complaint:** Switch to safe mode: – If caused by brake 2 solenoid valve, system switches to fixed 2nd, 3rd or 5th gear safe mode. – If caused by clutch 2 solenoid valve, system switches to fixed 2nd, 3rd or 6th gear safe mode. – If caused by the clutch 3 solenoid valve, system switches to fixed 2nd, 3rd, 4th or 5th gear safe mode. – If caused by clutch 1 solenoid valve, system switches to fixed 3rd, 5th or 6th gear safe mode. In all cases, restarting is in 3rd gear. If vehicle stopped in Drive, system switches to fixed 5th gear if engine speed is lower than **2000 rpm**. If vehicle stopped in R, switch to R if engine speed is lower than **2000 rpm**. Fault warning light comes on.

Note:
If at least one solenoid valve is faulty, replace the hydraulic distributor.

Look for any damage to the wiring and check the condition and connection of the connectors for components **119** and **754**.
If the connection or connections are faulty and there is a repair procedure (see **Technical Note 6015A, Electrical wiring repair, Wiring: Precautions for repair**), repair the wiring, otherwise replace it.

AFTER REPAIR	Deal with any other faults. Clear the fault memory. Switch off the ignition, wait **1 minute** and carry out a road test followed by another check with the **diagnostic tool**.

GETtheMANUALS.org

DF256 CONTINUED 2	

Disconnect the connector from component **119**, measure the **resistance of clutch 1 solenoid valve** (on the connector of component **119**) between the following connections: ● Connection code **5DL**, ● Connection code **5LW**. The **resistance** should be between **5.3 Ω ± 0.5 Ω at 20 ˚C**.
If the **resistance** is not correct, check the interpretation of fault DF273 **"Clutch solenoid valve 1 circuit"**.
Disconnect the connector from component **119**, measure the **resistance of clutch 2 solenoid valve** (on the connector of component **119**) between the following connections: ● Connection code **5DM**, ● Connection code **5LW**. The **resistance** should be between **5.3 Ω ± 0.5 Ω at 20 ˚C**.
If the **resistance** is not correct, check the interpretation of fault DF274 **"Clutch solenoid valve 2 circuit"**.
Disconnect the connector from component **119**, measure the **resistance of clutch 3 solenoid valve** (on the connector of component **119**) between the following connections: ● Connection code **5Q**, ● Connection code **5LW**. The **resistance** should be between **5.3 Ω ± 0.5 Ω at 20 ˚C**.
If the **resistance** is not correct, check the interpretation of fault DF275 **"Clutch solenoid valve 3 circuit"**.
Disconnect the connector from component **119**, measure the **resistance of the lockup/brake solenoid valve** (on the connector of component **119**) between the following connections: ● Connection code **5BF**, ● Connection code **5LW**. The **resistance** should be between **5.3 Ω ± 0.5 Ω at 20 ˚C**.
If the **resistance** is not correct, check the interpretation of fault DF306 **"Lockup/brake solenoid valve 1 circuit"**.

AFTER REPAIR	Deal with any other faults. Clear the fault memory. Switch off the ignition, wait **1 minute** and carry out a road test followed by another check with the **diagnostic tool**.

GETtheMANUALS.org

DF256 CONTINUED 3	

Disconnect the connector from component **119**, measure the **resistance of brake 2 solenoid valve** (on the connector of component **119**) between the following connections: ● Connection code **5R**, ● Connection code **5LW**. The **resistance** should be between **5.3 Ω ± 0.5 Ω at 20 ˚C**.
If the **resistance** is not correct, check the interpretation of fault **DF305 "Brake solenoid valve 2 circuit"**.
Disconnect the connector from component **119**, measure the **resistance of sequence solenoid valve 1** (on the connector of component **119**) between the following connections: ● Connection code **5CX**, ● Connection code **5LW**. The **resistance** should be between **28 Ω ± 2.8 Ω at 20 ˚C.**
If the **resistance** is not correct, check the interpretation of fault **DF085 "Sequence solenoid valve 1 circuit"**.
Disconnect the connector from component **119**, measure the **resistance of sequence solenoid valve 2** (on the connector of component **119**) between the following connections: ● Connection code **5CY**, ● Connection code **5LW**. The **resistance** should be between **28 Ω ± 2.8 Ω at 20 ˚C.**
If the **resistance** is not correct, check the interpretation of fault **DF086 "Sequence solenoid valve 2 circuit"**.

AFTER REPAIR	Deal with any other faults. Clear the fault memory. Switch off the ignition, wait **1 minute** and carry out a road test followed by another check with the **diagnostic tool**.

GETtheMANUALS.org

DF273 PRESENT OR STORED	CLUTCH 1 SOLENOID VALVE CIRCUIT CC.0 : Short circuit to earth. CO.1 : Open circuit or short circuit to + 12 V.

NOTES	**Conditions for applying fault finding procedures to stored faults:** The fault appears after: **– in the event of short circuit+ or short circuit-:** Lever in "Drive" position, gear engaged = 1, 2, 3, 4, 5, 6 **OR** Gear engaged = 1 and engine braking. **– in the event of open circuit:** Lever in "Drive" position, Gear engaged = 1, 2, 3, 4, **OR** Running command **AC026 "Clutch 1 solenoid valve"** and waiting **5 seconds**.
	System effects: **– in the event of short circuit+:** No effect. **– in the event of open circuit or short circuit-:** If the fault occurs on gears 1 to 4 in D mode, the transmission switches to Neutral (see **DF256 Erratic gear jumps**). Then system switches to fixed 5th gear mode after the vehicle has stopped.
	Customer complaint: **– in the event of short circuit+:** If the fault occurs while driving, the transmission engages fixed 5th gear. Restarting in fixed 5th gear (no more gear changes). Significant jolting during gear changes. Fault warning light comes on. **– in the event of open circuit or short circuit-:** If the fault occurs while driving, the transmission engages fixed 5th gear. Restarting in fixed 5th gear (gear change impossible) Fault warning light comes on.
	Use the Wiring Diagrams Technical Note, ESPACE IV ph2.

Look for any damage to the wiring harness, and check the condition and connection of the **automatic transmission computer** and **hydraulic distributor** connectors.
If the connection or connections are faulty and there is a repair procedure (see **Technical Note 6015A, Electrical wiring repair, Wiring: Precautions for repair**), repair the wiring, otherwise replace it.

Check for **+ after ignition feed** on connection **5LW** of component **754**.

Is the **+ after ignition feed** still present?
If YES, move on to **step 1**.
If NO, move on to **step 8**.

AFTER REPAIR	Deal with any other faults. Clear the fault memory. Switch off the ignition, wait **1 minute** and carry out a road test followed by another check with the **diagnostic tool**.

GETtheMANUALS.org

DF273 CONTINUED 1	

Step 1:

Disconnect the connector from component **119**, measure the **resistance of clutch 1 solenoid valve** (on the connector of component **119**) between the following connections:

- Connection code **5DL**,
- Connection code **5LW**.

The **resistance** should be between **5.3 Ω ± 0.5 Ω at 20 °C**.

Is the **resistance** correct?
If YES, contact the Techline.
If NO, move on to **step 2**.

Step 2:

Disconnect connector **R22** and check the **continuity and insulation** of the following connections:

- Connection code **5DL**,
- Connection code **5LW**.

Between component 119 and connector R22.
If the connection or connections are faulty and there is a repair procedure (see **Technical Note 6015A, Electrical wiring repair, Wiring: Precautions for repair**), repair the wiring, otherwise replace it.

Are the **continuity and insulation** correct?
If YES, move on to **step 3**.
If NO, replace the **external wiring harness** on the automatic transmission.

AFTER REPAIR	Deal with any other faults. Clear the fault memory. Switch off the ignition, wait **1 minute** and carry out a road test followed by another check with the **diagnostic tool**.

GETtheMANUALS.org

DF273 CONTINUED 2	

Stage 3:

Measure the **resistance of clutch 1 solenoid valve** (on connector **R22**) between the following connections:
- Connection code **5DL**,
- Connection code **5LW**.

The **resistance** should be between **5.3 Ω ± 0.5 Ω at 20 °C**.

Is the **resistance** correct?
If YES, and if the fault is still present, contact the Techline.
If NO, move on to **step 4**.

Stage 4:

Drain the automatic transmission (see **MR 405, Mechanical, 23A Automatic transmission, Oil change**) and remove the transmission housing (see **MR 405, Mechanical, 23A Automatic transmission, Hydraulic distributor**).
Disconnect the connector from component **754**, measure the **resistance of clutch 1 solenoid valve** (on the connector of the **internal wiring harness of the transmission**) between the following connections:
- Connection code **5DL**,
- Connection code **5LW**.

The **resistance** should be between **5.3 Ω ± 0.5 Ω at 20 °C**.

Is the **resistance** correct?
If YES, move on to **step 5**.
If NO, move on to **step 6**.

Stage 5:

Measure the **continuity and insulation** of the following connections:
- Connection code **5DL**,
- Connection code **5LW**.

Between connector **R22 and the internal connector in the transmission**.

Are the **continuity and insulation** correct?
If YES, contact the Techline.
If NO, replace the intermediate wiring harness between connector **R22** and the **internal** connector in the transmission.

AFTER REPAIR	Deal with any other faults. Clear the fault memory. Switch off the ignition, wait **1 minute** and carry out a road test followed by another check with the **diagnostic tool**.

GETtheMANUALS.org

DF273 CONTINUED 3	

Stage 6:

Disconnect the connector from **clutch 1 solenoid valve,** measure the **resistance of clutch 1 solenoid valve** between the following connections:

- Connection code **5DL**,
- Connection code **5LW**.

The **resistance** should be between **5.3 Ω ± 0.5 Ω at 20 ˚C**.

Is the **resistance** correct?
If YES, move on to **step 7**.
If NO, replace the hydraulic distributor.

Step 7:

Measure the **continuity and insulation** of the following connections:

- Connection code **5DL**,
- Connection code **5LW**.

Between **clutch solenoid valve 1** and the **internal connector on the transmission**.

Are the **continuity and insulation** correct?
If YES, contact the Techline.
If NO, replace the internal wiring harness on the automatic transmission.

Step 8:

Check **the continuity and insulation** of the following connection:

- Connection code **5LW** between components **119 and 754**.

If the connection or connections are faulty and there is a repair procedure (see **Technical Note 6015A, Electrical wiring repair, Wiring: Precautions for repair**), repair the wiring, otherwise replace it.

If **+ after ignition feed** is not present after checking the **feeds and earths** on the transmission computer, contact the Techline.

AFTER REPAIR	Deal with any other faults. Clear the fault memory. Switch off the ignition, wait **1 minute** and carry out a road test followed by another check with the **diagnostic tool**.

GETtheMANUALS.org

DF274 PRESENT OR STORED	CLUTCH 2 SOLENOID VALVE CIRCUIT CC.0 : Short circuit to earth. CO.1 : Open circuit or short circuit to + 12 V.

NOTES	**Conditions for applying fault finding procedures to stored faults:** The fault appears after: **– in the event of short circuit+ or short circuit-:** Lever in "Drive" position, gear engaged = 1, 2, 3, 4, 5, 6 **OR** Gear engaged = 1 and engine braking. **– in the event of open circuit:** Lever in "Drive" position, Gear engaged = 1, 2, 4, 6, **OR** lever in "Manual" position, gear engaged = 1 and engine braking. **OR** Running command **AC029 "Clutch solenoid valve 2"** and waiting **5 seconds**.
	System effects: **– in the event of short circuit+:** If the fault occurs in 3rd or 5th in D mode, an erratic shift to Neutral is detected (see **DF256 Erratic gear jumps**). **– in the event of open circuit:** – If the fault occurs in 1st in "Drive" position, shifting from 1st gear to 3rd gear. – If the fault occurs in 1st in “Manual” mode or in 2nd, 4th or 6th in “Drive” mode, the automatic transmission is locked. **– in the event of short circuit-:** – If the fault occurs in 1st in "Drive" position, shifting from 1st gear to 3rd gear. – If the fault occurs in 1st in “Manual” mode or in 2nd, 4th or 6th in “Drive” mode, the automatic transmission is locked. – lockup inhibited.
	Customer complaint: **– in the event of short circuit+:** Fault warning light comes on. **– in the event of open circuit:** – If the fault occurs in 1st in "Drive" position, shifting from 1st gear to 3rd gear. – If the fault occurs in 1st in "Manual" mode or in 2nd, 4th or 6th in "Drive" mode, the automatic transmission is locked. Fault warning light comes on. **– in the event of short circuit-:** If the fault occurs while driving, the transmission engages fixed 5th gear. Restarting in fixed 3rd gear (no more gear changes). Fault warning light comes on.
	Use the Wiring Diagrams Technical Note, ESPACE IV ph2.

Look for any damage to the wiring harness, and check the condition and connection of the **automatic transmission computer** and **hydraulic distributor** connectors.
If the connection or connections are faulty and there is a repair procedure (see **Technical Note 6015A, Electrical wiring repair, Wiring: Precautions for repair**), repair the wiring, otherwise replace it.

AFTER REPAIR	Deal with any other faults. Clear the fault memory. Switch off the ignition, wait **1 minute** and carry out a road test followed by another check with the **diagnostic tool**.

GETtheMANUALS.org

DF274 CONTINUED 1	

Check for **+ after ignition feed** on connection **5LW** of component **754**.

Is the **+ after ignition feed** still present?
If YES, move on to **step 1**.
If NO, move on to **step 8**.

Step 1:

Disconnect the connector from component **119**, measure the **resistance of clutch 2 solenoid valve** (on the connector of component **119**) between the following connections:
- Connection code **5DM**,
- Connection code **5LW**.

The **resistance** should be between **5.3 Ω ± 0.5 Ω at 20 °C**.

Is the **resistance** correct?
If YES, contact the Techline.
If NO, move on to **step 2**.

Step 2:

Disconnect connector **R22** and check **continuity and insulation** of the following connections:
- Connection code **5DM**,
- Connection code **5LW**.

Between component 119 and connector R22.
If the connection or connections are faulty and there is a repair procedure (see **Technical Note 6015A, Electrical wiring repair, Wiring: Precautions for repair**), repair the wiring, otherwise replace it.

Are the **continuity and insulation** correct?
If YES, move on to **step 3**.
If NO, replace the **external wiring harness** on the automatic transmission.

AFTER REPAIR	Deal with any other faults. Clear the fault memory. Switch off the ignition, wait **1 minute** and carry out a road test followed by another check with the **diagnostic tool**.

GETtheMANUALS.org

DF274 CONTINUED 2	

Stage 3:

Measure the **resistance of clutch 2 solenoid valve** (on connector **R22**) between the following connections:
- Connection code **5DM**,
- Connection code **5LW**.

The **resistance** should be between **5.3 Ω ± 0.5 Ω at 20 °C**.

Is the **resistance** correct?
If YES, and if the fault is still present, contact the Techline.
If NO, move on to **step 4**.

Stage 4:

Drain the automatic transmission (see **MR 405, Mechanical, 23A Automatic transmission, Oil change**) and remove the transmission housing (see **MR 405, Mechanical, 23A Automatic transmission, Hydraulic distributor**).
Disconnect the connector from component **754**, measure the resistance of clutch 2 solenoid valve (on the connector of the **internal wiring harness of the transmission**) between the following connections:
- Connection code **5DM**,
- Connection code **5LW**.

The **resistance** should be between **5.3 Ω ± 0.5 Ω at 20 °C**.

Is the **resistance** correct?
If YES, move on to **step 5**.
If NO, move on to **step 6**.

Stage 5:

Measure the **continuity and insulation** of the following connections:
- Connection code **5DM**,
- Connection code **5LW**.

Between connector **R22 and the internal connector in the transmission**.

Are the **continuity and insulation** correct?
If YES, contact the Techline.
If NO, replace the intermediate wiring harness between connector **R22** and the **internal** connector in the transmission.

AFTER REPAIR	Deal with any other faults. Clear the fault memory. Switch off the ignition, wait **1 minute** and carry out a road test followed by another check with the **diagnostic tool**.

GETtheMANUALS.org

DF274 CONTINUED 3	

Stage 6:

Disconnect the connector from **clutch 2 solenoid valve**, measure the **resistance of clutch 2 solenoid valve** between the following connections:
- Connection code **5DM**,
- Connection code **5LW**.

The **resistance** should be between **5.3 Ω ± 0.5 Ω at 20 ˚C**.

Is the **resistance** correct?
If YES, move on to **step 7**.
If NO, replace the hydraulic distributor.

Step 7:

Measure the **continuity and insulation** of the following connections:
- Connection code **5DM**,
- Connection code **5LW**.

Between **clutch solenoid valve 2** and **the internal connector on the transmission**.

Are the **continuity and insulation** correct?
If YES, contact the Techline.
If NO, replace the internal wiring harness on the automatic transmission.

Step 8:

Check **the continuity and insulation** of the following connection:
- Connection code **5LW** between components **119 and 754**.

If the connection or connections are faulty and there is a repair procedure (see **Technical Note 6015A, Electrical wiring repair, Wiring: Precautions for repair**), repair the wiring, otherwise replace it.

If **+ after ignition feed** is not present after checking the **feeds and earths** on the transmission computer, contact the Techline.

AFTER REPAIR	Deal with any other faults. Clear the fault memory. Switch off the ignition, wait **1 minute** and carry out a road test followed by another check with the **diagnostic tool**.

GETtheMANUALS.org

DF275 PRESENT OR STORED	CLUTCH 3 SOLENOID VALVE CIRCUIT CC.0 : Short circuit to earth. C0.1 : Open circuit or short circuit to + 12 V.

NOTES	**Conditions for applying fault finding procedures to stored faults:** The fault appears after: **– in the event of short circuit+ or short circuit-:** Lever in "Drive" position, gear engaged = 1, 2, 3, 4, 5, 6 **OR** Gear engaged = 1 and engine braking. **– in the event of open circuit:** Lever in "Manual" position, gear engaged = 1 and engine braking. **OR** lever in "Drive" position, gear engaged = 1, 2, 3. **OR** Running command **AC030 "Clutch solenoid valve 3"** and waiting **5 seconds**.
	System effects: **– in the event of short circuit+:** – If the fault occurs in 1st, 2nd or 3rd in "Drive" position, no shifting to 4th, 5th or 6th in "Drive" position. – If the fault occurs in 4th, 5th or 6th in "Drive" position, the transmission is in neutral (refer to fault "neutral detection"). **– in the event of open circuit:** – If the fault occurs in 1st in "Manual" mode or in 2nd or 3rd in "Drive" mode, the automatic transmission is locked. – If the fault occurs in 1st in "Drive" position, shifting from 1st gear to 4th gear. **– in the event of short circuit-:** – If the fault occurs in 1st in "Manual" mode or in 2nd or 3rd in "Drive" mode, the automatic transmission is locked. – If the fault occurs in 1st in "Drive" position, shifting from 1st gear to 4th gear. – lockup inhibited.
	Customer complaint: **– in the event of short circuit+:** – If the fault occurs in 1st, 2nd or 3rd in "Drive" position, no shifting to 4th, 5th or 6th in "Drive" position. – If the fault occurs in 4th, 5th or 6th in "Drive" position, the transmission is in neutral (refer to fault "neutral detection"). Fault warning light comes on. **– in the event of open circuit:** – If the fault occurs in 1st in "Manual" mode or in 2nd or 3rd in "Drive" mode, the automatic transmission is locked. – If the fault occurs in 1st in "Drive" position, shifting from 1st gear to 4th gear. Fault warning light comes on. **– in the event of short circuit-:** Fixed 5th gear engaged. Restarting is in 5th gear. Fault warning light comes on.
	Use the Wiring Diagrams Technical Note, ESPACE IV ph2.

AFTER REPAIR	Deal with any other faults. Clear the fault memory. Switch off the ignition, wait **1 minute** and carry out a road test followed by another check with the **diagnostic tool**.

GETtheMANUALS.org

DF275 CONTINUED 1	

Look for any damage to the wiring harness, and check the condition and connection of the transmission computer and multifunction switch connectors.
If the connection or connections are faulty and there is a repair procedure (see **Technical Note 6015A, Electrical wiring repair, Wiring: Precautions for repair**), repair the wiring, otherwise replace it.

Check for **+ after ignition feed** on connection **5LW** of component **754**.

Is the **+ after ignition feed** still present?
If YES, move on to **step 1**.
If NO, move on to **step 5**.

Step 1:

Disconnect the connector from component **119**, measure the **resistance of clutch 3 solenoid valve** (on the connector of component **119**) between the following connections:
- Connection code **5Q**,
- Connection code **5LW**.

The **resistance** should be between **5.3 Ω ± 0.5 Ω at 20 °C**.

Is the **resistance** correct?
If YES, contact the Techline.
If NO, move on to **step 2**.

Step 2:

Disconnect connector **R22** and check **continuity and insulation** of the following connections:
- Connection code **5Q**,
- Connection code **5LW**.

Between component 119 and connector R22.
If the connection or connections are faulty and there is a repair procedure (see **Technical Note 6015A, Electrical wiring repair, Wiring: Precautions for repair**), repair the wiring, otherwise replace it.

Are the **continuity and insulation** correct?
If YES, move on to **step 3**.
If NO, replace the **external wiring harness** on the automatic transmission.

AFTER REPAIR	Deal with any other faults. Clear the fault memory. Switch off the ignition, wait **1 minute** and carry out a road test followed by another check with the **diagnostic tool**.

GETtheMANUALS.org

DF275 CONTINUED 2	

Stage 3:

Measure the **resistance of clutch 2 solenoid valve** (on connector **R22**) between the following connections:
- Connection code **5Q**,
- Connection code **5LW**.

The **resistance** should be between **5.3 Ω ± 0.5 Ω at 20 °C**.

Is the **resistance** correct?
If YES, and if the fault is still present, contact the Techline.
If NO, move on to **step 4**.

Stage 4:

Drain the automatic transmission (see **MR 405, Mechanical, 23A Automatic transmission, Oil change**) and remove the transmission housing (see **MR 405, Mechanical, 23A Automatic transmission, Hydraulic distributor**).
Disconnect the connector from component **754**, measure the **resistance of clutch 3 solenoid valve** (on the connector of the **internal wiring harness of the transmission**) between the following connections:
- Connection code **5Q**,
- Connection code **5LW**.

The **resistance** should be between **5.3 Ω ± 0.5 Ω at 20 °C**.

Is the **resistance** correct?
If YES, move on to **step 5**.
If NO, move on to **step 6**.

Stage 5:

Measure the **continuity and insulation** of the following connections:
- Connection code **5Q**,
- Connection code **5LW**.

Between connector **R22 and the internal connector in the transmission**.

Are the **continuity and insulation** correct?
If YES, contact the Techline.
If NO, replace the intermediate wiring harness between connector **R22** and the **internal** connector in the transmission.

AFTER REPAIR	Deal with any other faults. Clear the fault memory. Switch off the ignition, wait **1 minute** and carry out a road test followed by another check with the **diagnostic tool**.

GETtheMANUALS.org

DF275 CONTINUED 3	

Stage 6:

Disconnect the connector from **clutch 3 solenoid valve**, measure the **resistance of clutch 3 solenoid valve** between the following connections:

- Connection code **5Q**,
- Connection code **5LW**.

The **resistance** should be between **5.3 Ω ± 0.5 Ω at 20 ˚C**.

Is the **resistance** correct?
If YES, move on to **step 7**.
If NO, replace the hydraulic distributor.

Step 7:

Measure the **continuity and insulation** of the following connections:

- Connection code **5Q**,
- Connection code **5LW**.

Between **clutch solenoid valve 3** and the **internal connector on the transmission**.

Are the **continuity and insulation** correct?
If YES, contact the Techline.
If NO, replace the internal wiring harness on the automatic transmission.

Step 8:

Check **the continuity and insulation** of the following connection:

- Connection code **5LW** between components **119 and 754**.

If the connection or connections are faulty and there is a repair procedure (see **Technical Note 6015A, Electrical wiring repair, Wiring: Precautions for repair**), repair the wiring, otherwise replace it.

If **+ after ignition feed** is not present after checking the **feeds and earths** on the transmission computer, contact the Techline.

AFTER REPAIR	Deal with any other faults. Clear the fault memory. Switch off the ignition, wait **1 minute** and carry out a road test followed by another check with the **diagnostic tool**.

GETtheMANUALS.org

DF289 PRESENT OR STORED	AUTOMATIC TRANSMISSION MULTIPLEX SIGNAL 1.DEF : No multiplex frameworks or invalid values (signal producing computer fault or CAN connection fault).

NOTES	**Conditions for applying fault finding procedures to stored faults:** The fault appears after: – No signals transmitted over the multiplex line network.
	Effect on system: Engine does not start. No lever position display on the instrument panel.
	Customer complaint: Engine does not start. No lever position display on the instrument panel. Jolting during gear changes.
	Use the Wiring Diagrams Technical Note, ESPACE IV ph2.

Run a multiplex network test (see **88B, Multiplex**).

Check **the continuity and insulation against earth** of the following connections:
- Connection code **3MS**,
- Connection code **3MT**.

between components **119 and 129**.
If the connection or connections are faulty and there is a repair procedure (see **Technical Note 6015A, Electrical wiring repair, Wiring: Precautions for repair**), repair the wiring, otherwise replace it.

If the fault is still present, contact the Techline.

AFTER REPAIR	Deal with any other faults. Clear the fault memory. Switch off the ignition, wait **1 minute** and carry out a road test followed by another check with the **diagnostic tool**.

GETtheMANUALS.org

DF290 PRESENT OR STORED	ABS MULTIPLEX SIGNAL 1.DEF : Multiplex frames absent or values invalid (fault with the computer generating the signal or multiplex line connection fault)

NOTES	**System effects:** The lockup is inhibited (still open).
	Customer complaint: Reduction in handling. If the lever is in position “P”, the “Apply brake” icon is not displayed on the instrument panel. The function reducing drag when stationary is no longer operational.
	Use the Wiring Diagrams Technical Note, ESPACE IV ph2.

Run a multiplex network test (see **88B, Multiplex**).

Run a check on the ABS anti-lock braking system (see **38C, ABS Bosch 8.0**).

Check **the continuity and insulation against earth** of the following connections:
- Connection code **3MS**,
- Connection code **3MT**.

Between components **119 and 120**.
If the connection or connections are faulty and there is a repair procedure (see **Technical Note 6015A, Electrical wiring repair, Wiring: Precautions for repair**), repair the wiring, otherwise replace it.

If the fault is still present, contact the Techline.

AFTER REPAIR	Deal with any other faults. Clear the fault memory. Switch off the ignition, wait **1 minute** and carry out a road test followed by another check with the **diagnostic tool**.

GETtheMANUALS.org

DF298 PRESENT OR STORED	GEAR SHIFTS 1.DEF : Hydraulic, mechanical or electrical fault on solenoid valves, deal with the other faults first

NOTES	**Conditions for applying fault finding procedures to stored faults:** This fault is declared present following a comparison between the solenoid control status, ratio and condition of pressure switches and detection of deceleration (**2.5 m/s^2**).
	Effect on system: Clutch deterioration and harsh deceleration. Lockup is inhibited (still open). The system effects will vary depending on which solenoid valve is faulty: – If brake 2 solenoid valve is the cause, system switches to fixed 6th gear safe mode. – If clutch 2 solenoid valve is the cause, system switches to fixed 5th gear safe mode. Restarting in 3rd gear. – If clutch 3 solenoid valve is the cause, system switches to fixed 5th gear safe mode.
	Customer complaint: Switch to safe mode: – If brake 2 solenoid valve is the cause, system switches to fixed 6th gear safe mode. – If clutch 2 solenoid valve is the cause, system switches to fixed 5th gear safe mode. Restarting in 3rd gear. – If clutch 3 solenoid valve is the cause, system switches to fixed 5th gear safe mode. Fault warning light comes on.
	Special notes: Clutch deterioration and harsh deceleration. The system effects will vary depending on which solenoid valve is faulty: – If brake 2 solenoid valve is the cause, system switches to fixed 6th gear safe mode. – If clutch 2 solenoid valve is the cause, system switches to fixed 5th gear safe mode. Restarting in 3rd gear. – If clutch 3 solenoid valve is the cause, system switches to fixed 5th gear safe mode. Fault warning light comes on.
	Use the Wiring Diagrams Technical Note, ESPACE IV ph2.

Note:
If at least one solenoid valve is faulty, replace the hydraulic distributor.

Look for any damage to the wiring and check the condition and connection of the connectors for components **119** and **754**.
Manipulate the wiring harness in order to observe any change in the fault status (Present → stored).
If the connections are faulty and there is a repair procedure (see **Technical Note 6015A, Electrical wiring repair, Wiring: Precautions for repair**), repair the wiring, otherwise replace it.

AFTER REPAIR	Deal with any other faults. Clear the fault memory. Switch off the ignition, wait **1 minute** and carry out a road test followed by another check with the **diagnostic tool**.

GETtheMANUALS.org

DF298 CONTINUED 1	

Disconnect the connector from component **119**, measure the **resistance of clutch 1 solenoid valve** (on the connector of component **119**) between the following connections: ● Connection code **5DL**, ● Connection code **5LW**. The **resistance** should be between **5.3 Ω ± 0.5 Ω at 20 ˚C**.
If the **resistance** is not correct, check the interpretation of fault DF273 **"Clutch solenoid valve 1 circuit"**.
Disconnect the connector from component **119**, measure the **resistance of clutch 2 solenoid valve** (on the connector of component **119**) between the following connections: ● Connection code **5DM**, ● Connection code **5LW**. The **resistance** should be between **5.3 Ω ± 0.5 Ω at 20 ˚C**.
If the **resistance** is not correct, check the interpretation of fault DF274 **"Clutch solenoid valve 2 circuit"**.
Disconnect the connector from component **119**, measure the **resistance of clutch 3 solenoid valve** (on the connector of component **119**) between the following connections: ● Connection code **5Q**, ● Connection code **5LW**. The **resistance** should be between **5.3 Ω ± 0.5 Ω at 20 ˚C**.
If the **resistance** is not correct, check the interpretation of fault DF275 **"Clutch solenoid valve 3 circuit"**.
Disconnect the connector from component **119**, measure the **resistance of the lockup/brake solenoid valve** (on the connector of component **119**) between the following connections: ● Connection code **5BF**, ● Connection code **5LW**. The **resistance** should be between **5.3 Ω ± 0.5 Ω at 20 ˚C**.
If the **resistance** is not correct, check the interpretation of fault **DF306 "Lockup/brake solenoid valve 1 circuit"**.

AFTER REPAIR	Deal with any other faults. Clear the fault memory. Switch off the ignition, wait **1 minute** and carry out a road test followed by another check with the **diagnostic tool**.

GETtheMANUALS.org

DF298 CONTINUED 2	

Disconnect the connector from component **119**, measure the **resistance of brake 2 solenoid valve** (on the connector of component **119**) between the following connections: ● Connection code **5R**, ● Connection code **5LW**. The **resistance** should be between **5.3 Ω ± 0.5 Ω at 20 ˚C**.
If the **resistance** is not correct, check the interpretation of fault **DF305 "Brake solenoid valve 2 circuit"**.
Disconnect the connector from component **119**, measure the **resistance of sequence solenoid valve 1** (on the connector of component **119**) between the following connections: ● Connection code **5CX**, ● Connection code **5LW**. The **resistance** should be between **28 Ω ± 2.8 Ω at 20 ˚C**.
If the **resistance** is not correct, check the interpretation of fault **DF085 "Sequence solenoid valve 1 circuit"**.
Disconnect the connector from component **119**, measure the **resistance of sequence solenoid valve 2** (on the connector of component **119**) between the following connections: ● Connection code **5CY**, ● Connection code **5LW**. The **resistance** should be between **28 Ω ± 2.8 Ω at 20 ˚C**.
If the resistance is not correct, check the interpretation of fault **DF086 "Sequence solenoid valve 2 circuit"**.

AFTER REPAIR	Deal with any other faults. Clear the fault memory. Switch off the ignition, wait **1 minute** and carry out a road test followed by another check with the **diagnostic tool**.

GETtheMANUALS.org

DF300 PRESENT OR STORED	BRAKE 2 SOLENOID VALVE CIRCUIT CC.0 : Short circuit to earth. CO.1 : Short circuit or open circuit to + 12 V

NOTES	**Conditions for applying fault finding procedures to stored faults:** The fault appears after: **– in the event of short circuit+ or short circuit-:** Lever in "Drive" position, gear engaged = 1, 2, 3, 4, 5, 6 **OR** Gear engaged = 1 and engine braking. **– in the event of open circuit:** Lever in position D, gear engaged = 1, 2, 6 **and** setpoint current **> 937 mA** **OR** Running command **AC032 "Brake solenoid valve 2"** and waiting **5 seconds**.
	System effects: **– in the event of short circuit+:** If the fault occurs in 1st in "Drive", system shifts to 2nd in "Drive". If the fault occurs in 1st in "Drive" with engine braking, 3rd, 4th, 5th in "Drive", automatic transmission locked. Automatic transmission locking detection only possible in 4th in “Drive” mode only (see **Interpretation of faults, fault DF298 Gear changes**). **– in the event of open circuit:** – If the fault appears in 2nd, downshifting to 1st without engine braking. – If the fault occurs in 6th gear in “Drive” mode, an erratic shift to neutral is detected (see **DF256 Erratic gear jumps**). **– in the event of short circuit-:** – If the fault appears in 2nd, downshifting to 1st without engine braking. – If the fault occurs in 6th gear in “Drive” mode, an erratic shift to neutral is detected (see **DF256 Erratic gear jumps**). – lockup is inhibited.
	Customer complaint: **– in the event of short circuit+:** If the fault occurs in 1st in "Drive" mode, system shifts to 2nd in "Drive" mode. If the fault occurs in 1st in "Drive" mode with engine braking, 3rd in "Drive" mode, 4th in "Drive" mode or 5th in "Drive" mode, automatic transmission locked. Jolting during gear changes. Fault warning light comes on. **– in the event of open circuit:** – If the fault appears in 2nd, downshifting to 1st without engine braking. – If the fault occurs in 6th in "Drive" mode, an erratic shift to neutral is detected. Fault warning light comes on. **– in the event of short circuit-:** If the fault occurs while driving, the transmission engages fixed 5th gear. Restarting in fixed 3rd gear (no more gear changes). Fault warning light comes on.
	Use the Wiring Diagrams Technical Note, ESPACE IV ph2.

AFTER REPAIR	Deal with any other faults. Clear the fault memory. Switch off the ignition, wait **1 minute** and carry out a road test followed by another check with the **diagnostic tool**.

GETtheMANUALS.org

DF300 CONTINUED 1	

Look for any damage to the wiring harness, and check the condition and connection of the **automatic transmission computer** and **hydraulic distributor** connectors.
If the connection or connections are faulty and there is a repair procedure (see **Technical Note 6015A, Electrical wiring repair, Wiring: Precautions for repair**), repair the wiring, otherwise replace it.

Check for **+ after ignition feed** on connection **5LW** of component **754**.

Is the **+ after ignition feed** still present?
If YES, move on to **step 1**.
If NO, move on to **step 8**.

Step 1:

Disconnect the connector from component **119**, measure the **resistance of brake 2 solenoid valve** (on the connector of component **119**) between the following connections:
- Connection code **5R**,
- Connection code **5LW**.

The **resistance** should be between **5.3 Ω ± 0.5 Ω at 20 ˚C**.

Is the **resistance** correct?
If YES, contact the Techline.
If NO, move on to **step 2**.

Step 2:

Disconnect connector **R22** and check **continuity and insulation** of the following connections:
- Connection code **5R**,
- Connection code **5LW**.

Between component 119 and connector R22.
If the connection or connections are faulty and there is a repair procedure (see **Technical Note 6015A, Electrical wiring repair, Wiring: Precautions for repair**), repair the wiring, otherwise replace it.

Are the **continuity and insulation** correct?
If YES, move on to **step 3**.
If NO, replace the **external wiring harness** on the automatic transmission.

AFTER REPAIR	Deal with any other faults. Clear the fault memory. Switch off the ignition, wait **1 minute** and carry out a road test followed by another check with the **diagnostic tool**.

GETtheMANUALS.org

DF300 CONTINUED 2	

Stage 3:

Measure the **resistance of brake 2 solenoid valve** (on connector **R22**) between the following connections:
- Connection code **5R**,
- Connection code **5LW**.

The **resistance** should be between **5.3 Ω ± 0.5 Ω at 20 ˚C**.

Is the **resistance** correct?
If YES, and if the fault is still present, contact the Techline.
If NO, move on to **step 4**.

Stage 4:

Drain the automatic transmission (see **MR 405, Mechanical, 23A Automatic transmission, Oil change**) and remove the transmission housing (see **MR 405, Mechanical, 23A Automatic transmission, Hydraulic distributor**).
Disconnect the connector from component **754**, measure the **resistance of brake 2 solenoid valve** (on the connector of the **internal wiring harness of the transmission**) between the following connections:
- Connection code **5R**,
- Connection code **5LW**.

The **resistance** should be between **5.3 Ω ± 0.5 Ω at 20 ˚C**.

Is the **resistance** correct?
If YES, move on to **step 5**.
If NO, move on to **step 6**.

Stage 5:

Measure the **continuity and insulation** of the following connections:
- Connection code **5R**,
- Connection code **5LW**.

Between connector **R22 and the internal connector in the transmission**.

Are the **continuity and insulation** correct?
If YES, contact the Techline.
If NO, replace the intermediate wiring harness between connector **R22** and the **internal** connector in the transmission.

AFTER REPAIR	Deal with any other faults. Clear the fault memory. Switch off the ignition, wait **1 minute** and carry out a road test followed by another check with the **diagnostic tool**.

GETtheMANUALS.org

DF300 CONTINUED 3	

Stage 6:
Disconnect the connector from **brake 2 solenoid valve**, measure the **resistance of brake 2 solenoid valve** between the following connections: ● Connection code **5R**, ● Connection code **5LW**. The **resistance** should be between **5.3 Ω ± 0.5 Ω at 20 ˚C**.
Is the **resistance** correct? If YES, move on to **step 7**. If NO, replace the hydraulic distributor.

Step 7:
Measure the continuity and insulation of the following connections: ● Connection code **5R**, ● Connection code **5LW**. Between **brake solenoid valve 2** and the **internal connector on the transmission**.
Are the **continuity and insulation** correct? If YES, contact the Techline. If NO, replace the internal wiring harness on the automatic transmission.

Step 8:
Check **the continuity and insulation** of the following connection: ● Connection code **5LW** between components **119 and 754**. If the connection or connections are faulty and there is a repair procedure (see **Technical Note 6015A, Electrical wiring repair, Wiring: Precautions for repair**), repair the wiring, otherwise replace it.
If **+ after ignition feed** is not present after checking the **feeds and earths** on the transmission computer, contact the Techline.

AFTER REPAIR	Deal with any other faults. Clear the fault memory. Switch off the ignition, wait **1 minute** and carry out a road test followed by another check with the **diagnostic tool**.

GETtheMANUALS.org

DF301 PRESENT OR STORED	CLUTCH 1 PRESSURE SWITCH CIRCUIT CO.1 : Short circuit or open circuit to + 12 V

NOTES	**Conditions for applying fault finding procedures to stored faults:** The fault appears after: Lever in "Drive" position, gear engaged = 1, 2, 3, 4, **and** accelerator pedal > **0** %, vehicle speed > **6 mph (10 km/h)**, **and** for each gear, the status for clutch pressure switch 1 does not correspond to the solenoid valve control status. After engaging 4th gear, switch off the ignition and remove card from its reader. Reinsert the card in the card reader, start up the vehicle then repeat the previous operation. Check (with the engine running), status **ET261 Clutch 1** (consult status **ET261 Clutch 1 (see the interpretation of statuses)**).
	Use the Wiring Diagrams Technical Note, ESPACE IV ph2.

Look for any damage to the wiring and check the condition and connection of the connectors for components **119** and **754**.
If the circuit is faulty and there is a repair procedure (see **Technical Note 6015A, Electrical wiring repair, Wiring: Precautions for repair**), repair the wiring, otherwise replace it.

Check the **continuity and insulation** to **+ 12 V** of the following external wiring harness connections:
Connection code **5CZ**.
Connection code **5LW**.
Between components **119 and 754**.
If the connection or connections are faulty and there is a repair procedure (see **Technical Note 6015A, Electrical wiring repair, Wiring: Precautions for repair**), repair the wiring, otherwise replace it.

Are the **continuity and insulation** correct?
If YES, move on to **step 1**.
If NO, replace the external wiring harness.

AFTER REPAIR	Deal with any other faults. Clear the fault memory. Switch off the ignition, wait **1 minute** and carry out a road test followed by another check with the **diagnostic tool**.

GETtheMANUALS.org

DF301 **CONTINUED 1**	

Step 1:
Drain the automatic transmission (see **MR 405, Mechanical, 23A Automatic transmission, Oil change**) and remove the transmission housing (see **MR 405, Mechanical, 23A Automatic transmission, Hydraulic distributor**).
Check the **continuity and insulation** to **+ 12 V** of the following internal wiring harness connections: ● Connection code **5CZ**, between components **119** and the **pressure switch on clutch 1**. If the connection or connections are faulty and there is a repair procedure (see **Technical Note 6015A, Electrical wiring repair, Wiring: Precautions for repair**), repair the wiring, otherwise replace it.
Are the **continuity and insulation** correct? If YES, replace the **pressure switch on clutch 1**. If NO, replace the internal wiring harness.

AFTER REPAIR	Deal with any other faults. Clear the fault memory. Switch off the ignition, wait **1 minute** and carry out a road test followed by another check with the **diagnostic tool**.

GETtheMANUALS.org

DF302 PRESENT OR STORED	CLUTCH 2 PRESSURE SWITCH CIRCUIT CO.1 : Short circuit or open circuit to + 12 V

NOTES	**Conditions for applying fault finding procedures to stored faults:** The fault appears after: Lever in "Drive" position, gear engaged = 3, 5 **OR** "Reverse" position, **and** accelerator pedal depressed > **0 %**, vehicle speed > **6 mph (10 km/h)**, **and** for each gear, the status of clutch 2 pressure switch does not correspond to the solenoid control status. After engaging 4th gear, switch off the ignition and remove card from its reader. Reinsert the card in the card reader, start up the vehicle then repeat the previous operation.
	Use the Wiring Diagrams Technical Note, ESPACE IV ph2.

Look for any damage to the wiring and check the condition and connection of the connectors for components **119** and **754**.
If the circuit is faulty and there is a repair procedure (see **Technical Note 6015A, Electrical wiring repair, Wiring: Precautions for repair**), repair the wiring, otherwise replace it.
Manipulate the wiring harness in order to observe any change in the fault status (Present → stored).

Check the **continuity and insulation** to **+ 12 V** of the following external wiring harness connections:

- Connection code **5LM**,
- Connection code **5LW**.

Between components **119 and 754**.
If the connection or connections are faulty and there is a repair procedure (see **Technical Note 6015A, Electrical wiring repair, Wiring: Precautions for repair**), repair the wiring, otherwise replace it.

Are the **continuity and insulation** correct?
If YES, move on to **step 1**.
If NO, replace the external wiring harness.

AFTER REPAIR	Deal with any other faults. Clear the fault memory. Switch off the ignition, wait **1 minute** and carry out a road test followed by another check with the **diagnostic tool**.

GETtheMANUALS.org

DF302 CONTINUED	

Step 1:
Drain the automatic transmission (see **MR 405, Mechanical, 23A Automatic transmission, Oil change**) and remove the transmission housing (see **MR 405, Mechanical, 23A Automatic transmission, Hydraulic distributor**).
Check the **continuity and insulation** to **+ 12 V** of the following internal wiring harness connections: ● Connection code **5LM**, between components **119** and the **pressure switch on clutch 2**. If the connection or connections are faulty and there is a repair procedure (see **Technical Note 6015A, Electrical wiring repair, Wiring: Precautions for repair**), repair the wiring, otherwise replace it.
Are the **continuity and insulation** correct? If YES, replace the **pressure switch on clutch 2**. If NO, replace the internal wiring harness.

AFTER REPAIR	Deal with any other faults. Clear the fault memory. Switch off the ignition, wait **1 minute** and carry out a road test followed by another check with the **diagnostic tool**.

GETtheMANUALS.org

DF303 PRESENT OR STORED	CLUTCH 3 PRESSURE SWITCH CIRCUIT CO.1 : Short circuit or open circuit to + 12 V

NOTES	**Conditions for applying fault finding procedures to stored faults:** The fault appears after: Lever in "Drive" position, Gear engaged = 4, 5, 6 **and** accelerator pedal depressed > **0 %**, vehicle speed > **6 mph (10 km/h)**, **and** for each gear, the status of clutch 3 pressure switch does not correspond to the solenoid control status. After engaging 4th gear, switch off the ignition and remove card from its reader. Reinsert the card in the card reader, start up the vehicle then repeat the previous operation.
	Use the Wiring Diagrams Technical Note, ESPACE IV ph2.

Look for any damage to the wiring and check the condition and connection of the connectors for components **119** and **754**.
If the connection or connections are faulty and there is a repair procedure (see **Technical Note 6015A, Electrical wiring repair, Wiring: Precautions for repair**), repair the wiring, otherwise replace it.
Manipulate the wiring harness in order to observe any change in the fault status (Present → stored).

Check the **continuity and insulation** to **+ 12 V** of the following gearbox external wiring harness connections:

- Connection code **5LH**,
- Connection code **5LW**.

Between components **119 and 754**.
If the connection or connections are faulty and there is a repair procedure (see **Technical Note 6015A, Electrical wiring repair, Wiring: Precautions for repair**), repair the wiring, otherwise replace it.

Are the **continuity and insulation** correct?
If YES, move on to **step 1**.
If NO, replace the external wiring harness.

AFTER REPAIR	Deal with any other faults. Clear the fault memory. Switch off the ignition, wait **1 minute** and carry out a road test followed by another check with the **diagnostic tool**.

GETtheMANUALS.org

DF303 CONTINUED	

Step 1:
Drain the automatic transmission (see **MR 405, Mechanical, 23A Automatic transmission, Oil change**) and remove the transmission housing (see **MR 405, Mechanical, 23A Automatic transmission, Hydraulic distributor**).
Check the **continuity and insulation** to **+ 12 V** of the following internal wiring harness connection: ● Connection code **5LH** between component **119** and **clutch pressure switch 3**. If the connection or connections are faulty and there is a repair procedure (see **Technical Note 6015A, Electrical wiring repair, Wiring: Precautions for repair**), repair the wiring, otherwise replace it.
Are the **continuity and insulation** correct? If YES, replace the **pressure switch on clutch 3**. If NO, replace the internal wiring harness.

AFTER REPAIR	Deal with any other faults. Clear the fault memory. Switch off the ignition, wait **1 minute** and carry out a road test followed by another check with the **diagnostic tool**.

GETtheMANUALS.org

DF304 PRESENT OR STORED	BRAKE 1 PRESSURE SWITCH CIRCUIT CO.1 : Short circuit or open circuit to + 12 V

NOTES	**Conditions for applying fault finding procedures to stored faults:** The fault appears after: Lever in Reverse position, **and** brake 1 pressure switch status is "inactive". After engaging 4th gear, switch off the ignition and remove card from its reader. Reinsert the card in the card reader, start up the vehicle then repeat the previous operation.
	Use the Wiring Diagrams Technical Note, ESPACE IV ph2.

Look for any damage to the wiring and check the condition and connection of the connectors for components **119** and **754**.
If the connections are faulty and there is a repair procedure (see **Technical Note 6015A, Electrical wiring repair, Wiring: Precautions for repair**), repair the wiring, otherwise replace it.
Manipulate the wiring harness in order to observe any change in the fault status (Present → stored).

Check the **continuity and insulation** to **+ 12 V** of the following gearbox external wiring harness connections:

- Connection code **5KY**,
- Connection code **5LW**.

Between components **119 and 754**.
If the connection or connections are faulty and there is a repair procedure (see **Technical Note 6015A, Electrical wiring repair, Wiring: Precautions for repair**), repair the wiring, otherwise replace it.

Are the **continuity and insulation** correct?
If YES, move on to **step 1**.
If NO, replace the external wiring harness.

AFTER REPAIR	Deal with any other faults. Clear the fault memory. Switch off the ignition, wait **1 minute** and carry out a road test followed by another check with the **diagnostic tool**.

GETtheMANUALS.org

DF304 CONTINUED	

Step 1:
Drain the automatic transmission (see **MR 405, Mechanical, 23A Automatic transmission, Oil change**) and remove the transmission housing (see **MR 405, Mechanical, 23A Automatic transmission, Hydraulic distributor**).
Check the **continuity and insulation** to **+ 12 V** of the following internal wiring harness connection: ● Connection code **5KY** between component **119** and **brake pressure switch 1**. If the connection or connections are faulty and there is a repair procedure (see **Technical Note 6015A, Electrical wiring repair, Wiring: Precautions for repair**), repair the wiring, otherwise replace it.
Are the **continuity and insulation** correct? If YES, replace the **pressure switch on brake 1**. If NO, replace the internal wiring harness.

AFTER REPAIR	Deal with any other faults. Clear the fault memory. Switch off the ignition, wait **1 minute** and carry out a road test followed by another check with the **diagnostic tool**.

GETtheMANUALS.org

DF305 PRESENT OR STORED	BRAKE 2 PRESSURE SWITCH CIRCUIT CO.1 : Short circuit or open circuit to + 12 V

NOTES	**Conditions for applying fault finding procedures to stored faults:** The fault appears after: Lever in "Drive" position, Gear engaged = 2, 6, **and** accelerator pedal depressed > **0 %**, vehicle speed > **6 mph (10 km/h)**, **and** for each gear, the status of brake pressure switch 2 does not correspond to the solenoid control status. (consult the interpretation of faults **ET260 "Brake 2"** in the fault finding chapter, Interpretation of statuses).
	Use the Wiring Diagrams Technical Note, ESPACE IV ph2.

Look for any damage to the wiring and check the condition and connection of the connectors for components **119** and **754**.
If the connection or connections are faulty and there is a repair procedure (see **Technical Note 6015A, Electrical wiring repair, Wiring: Precautions for repair**), repair the wiring, otherwise replace it.
Manipulate the wiring harness in order to observe any change in the fault status (Present → stored).

Check the **continuity and insulation** to **+ 12 V** of the following gearbox external wiring harness connections:

- Connection code **5LK**,
- Connection code **5LW**.

Between components **119 and 754**.
If the connection or connections are faulty and there is a repair procedure (see **Technical Note 6015A, Electrical wiring repair, Wiring: Precautions for repair**), repair the wiring, otherwise replace it.

Are the **continuity and insulation** correct?
If YES, move on to **step 1**.
If NO, replace the external wiring harness.

AFTER REPAIR	Deal with any other faults. Clear the fault memory. Switch off the ignition, wait **1 minute** and carry out a road test followed by another check with the **diagnostic tool**.

GETtheMANUALS.org

DF305 CONTINUED	

Step 1:

Drain the automatic transmission (see **MR 405, Mechanical, 23A Automatic transmission, Oil change**) and remove the transmission housing (see **MR 405, Mechanical, 23A Automatic transmission, Hydraulic distributor**).

Check the **continuity and insulation** to **+ 12 V** of the following internal wiring harness connection:

- Connection code **5LK** between component **119** and **brake pressure switch 2**.

If the connection or connections are faulty and there is a repair procedure (see **Technical Note 6015A, Electrical wiring repair, Wiring: Precautions for repair**), repair the wiring, otherwise replace it.

Are the **continuity and insulation** correct?
If YES, replace the **pressure switch on brake 1**.
If NO, replace the internal wiring harness.

AFTER REPAIR	Deal with any other faults. Clear the fault memory. Switch off the ignition, wait **1 minute** and carry out a road test followed by another check with the **diagnostic tool**.

GETtheMANUALS.org

DF306 PRESENT OR STORED	LOCKUP/BRAKE 1 SOLENOID VALVE CIRCUIT CC.0 : Short circuit to earth. CO.1 : Short circuit or open circuit to + 12 V

NOTES	**Conditions for applying fault finding procedures to stored faults:** The fault appears after: **– in the event of short circuit+ or short circuit-:** Lever in "Drive" position, gear engaged = 1, 2, 3, 4, 5, 6 **OR** Gear engaged = 1 and engine braking. **– in the event of open circuit:** Lever in "Drive" position, lockup active, Gear engaged = 1, 2, 3, 4, 5, 6 **OR** Gear engaged = 1 and engine braking. And the current setpoint > **612 mA**. Note: The fault appears after **5 seconds**.
	System effects: **– in the event of short circuit+:** lockup remains active. In D2, risk of engine stalling. **– in the event of open circuit or short circuit-:** lockup remains inactive.
	Customer complaint: **– in the event of short circuit+:** If the fault occurs while driving, the transmission engages fixed 5th gear. Restarting in fixed 3rd gear (no more gear changes). Risk of engine stalling. Fault warning light comes on. **– in the event of open circuit or short circuit-:** If the fault occurs while driving, the transmission engages fixed 5th gear. Restarting in fixed 3rd gear (no more gear changes). Fault warning light comes on.
	Use the Wiring Diagrams Technical Note, ESPACE IV ph2.

Look for any damage to the wiring harness, and check the condition and connection of the **automatic transmission computer** and **hydraulic distributor** connectors.
If the connection or connections are faulty and there is a repair procedure (see **Technical Note 6015A, Electrical wiring repair, Wiring: Precautions for repair**), repair the wiring, otherwise replace it.

Check for **+ after ignition feed** on connection **5LW** of component **754**.

Is the **+ after ignition feed** still present?
If YES, move on to **step 1**.
If NO, move on to **step 8**.

AFTER REPAIR	Deal with any other faults. Clear the fault memory. Switch off the ignition, wait **1 minute** and carry out a road test followed by another check with the **diagnostic tool**.

GETtheMANUALS.org

DF306 CONTINUED 1	

Step 1:

Disconnect the connector from component **119**, measure the **resistance of the lockup/brake 1 solenoid valve** (on the connector of component **119**) between the following connections:

- Connection code **5BF**,
- Connection code **5LW**.

The **resistance** should be between **5.3 Ω ± 0.5 Ω at 20 °C**.

Is the **resistance** correct?
If YES, contact the Techline.
If NO, move on to **step 2**.

Step 2:

Disconnect connector **R22** and check **continuity and insulation** of the following connections:

- Connection code **5BF**,
- Connection code **5LW**.

Between component **119 and connector R22**.
If the connection or connections are faulty and there is a repair procedure (see **Technical Note 6015A, Electrical wiring repair, Wiring: Precautions for repair**), repair the wiring, otherwise replace it.

Are the **continuity and insulation** correct?
If YES, move on to **step 3**.
If NO, replace the **external wiring harness** on the automatic transmission.

Stage 3:

Measure the **resistance of lockup/brake 1 solenoid valve** (on connector **R22**) between the following connections:

- Connection code **5BF**,
- Connection code **5LW**.

The **resistance** should be between **5.3 Ω ± 0.5 Ω at 20 °C**.

Is the **resistance** correct?
If YES, and if the fault is still present, contact the Techline.
If NO, move on to **step 4**.

AFTER REPAIR	Deal with any other faults. Clear the fault memory. Switch off the ignition, wait **1 minute** and carry out a road test followed by another check with the **diagnostic tool**.

GETtheMANUALS.org

DF306 CONTINUED 2	

Stage 4:

Drain the automatic transmission (see **MR 405, Mechanical, 23A Automatic transmission, Oil change**) and remove the transmission housing (see **MR 405, Mechanical, 23A Automatic transmission, Hydraulic distributor**).
Disconnect the connector from component **754**, measure the **resistance of lockup/brake 1 solenoid valve** (on the connector of the **internal wiring harness of the transmission**) between the following connections:

- Connection code **5BF**,
- Connection code **5LW**.

The **resistance** should be between **5.3 Ω ± 0.5 Ω at 20 °C**.

Is the **resistance** correct?
If YES, move on to **step 5**.
If NO, move on to **step 6**.

Stage 5:

Measure the **continuity and insulation** of the following connections:

- Connection code **5BF**,
- Connection code **5LW**.

Between connector **R22 and the internal connector in the transmission**.

Are the **continuity and insulation** correct?
If YES, contact the Techline.
If NO, replace the intermediate wiring harness between connector **R22** and the **internal** connector in the transmission.

AFTER REPAIR	Deal with any other faults. Clear the fault memory. Switch off the ignition, wait **1 minute** and carry out a road test followed by another check with the **diagnostic tool**.

GETtheMANUALS.org

DF306 CONTINUED 3	

Stage 6:

Disconnect the connector from **lockup/brake 1 solenoid valve**, measure the **resistance of lockup/brake 1 solenoid valve** between the following connections:
- Connection code **5BF**,
- Connection code **5LW**.

The **resistance** should be between **5.3 Ω ± 0.5 Ω at 20 °C**.

Is the **resistance** correct?
If YES, move on to **step 7**.
If NO, replace the hydraulic distributor.

Step 7:

Measure the **continuity and insulation** of the following connections:
- Connection code **5BF**,
- Connection code **5LW**.

Between **lockup/brake 1 solenoid valve** and the **internal connector on the transmission**.

Are the **continuity and insulation** correct?
If YES, contact the Techline.
If NO, replace the internal wiring harness on the automatic transmission.

Step 8:

Check **the continuity and insulation** of the following connection:
- Connection code **5LW** between components **119 and 754**.

If the connection or connections are faulty and there is a repair procedure (see **Technical Note 6015A, Electrical wiring repair, Wiring: Precautions for repair**), repair the wiring, otherwise replace it.

If **+ after ignition feed** is not present after checking the **feeds and earths** on the transmission computer, contact the Techline.

AFTER REPAIR	Deal with any other faults. Clear the fault memory. Switch off the ignition, wait **1 minute** and carry out a road test followed by another check with the **diagnostic tool**.

GETtheMANUALS.org

DF307 PRESENT OR STORED	ENGINE BRAKE 1.DEF : Hydraulic, mechanical or electrical fault on solenoid valves, deal with the other faults first

NOTES	**Order of priority in the event of more than one fault:** If there is a combination of the following faults: – **DF300 Brake solenoid valve 2 circuit, DF306 Brake/lock up solenoid valve 1 circuit and DF307,** deal first with faults **DF300 "Brake 2 solenoid valve circuit" and DF306 "Lockup/ brake 1 solenoid valve circuit"**.
	Conditions for applying fault finding procedures to stored faults: The fault appears after: Lever in "Drive" position. The solenoid valve control status corresponds to a fault **OR** the pressure switch status corresponds to a fault.
	System effects: Significant engine braking when the fault appears.
	Customer complaint: Significant engine braking when the fault appears, but then no engine braking in 1st. Fault warning light comes on.

STEP 1 (checking the **brake 2 solenoid valve**):

Look for any damage to the wiring harness, and check the condition and connection of the **automatic transmission computer** and **hydraulic distributor** connectors.
If the connection is faulty and there is a repair procedure (see **Technical Note 6015A, Electrical wiring repair, Wiring: Precautions for repair**), repair the wiring, otherwise replace it.

Check for **+ after ignition feed** on connection **5LW** of component **754**.

Is the **+ after ignition feed** still present?
If YES, move on to **step 1**.
If NO, move on to **step 8**.

Step 1:

Disconnect the connector from component **119**, measure the **resistance of brake 2 solenoid valve** (on the connector of component **119**) between the following connections:
- Connection code **5R**,
- Connection code **5LW**.

The **resistance** should be between **5.3 Ω ± 0.5 Ω at 20 °C**.

Is the **resistance** correct?
If YES, contact the Techline.
If NO, move on to **step 2**.

AFTER REPAIR	Deal with any other faults. Clear the fault memory. Switch off the ignition, wait **1 minute** and carry out a road test followed by another check with the **diagnostic tool**.

GETtheMANUALS.org

DF307 CONTINUED 1	

Step 2:

Disconnect connector **R22** and check **continuity and insulation** of the following connections:
- Connection code **5R**,
- Connection code **5LW**.

Between component **119 and connector R22**.
If the connection or connections are faulty and there is a repair procedure (see **Technical Note 6015A, Electrical wiring repair, Wiring: Precautions for repair**), repair the wiring, otherwise replace it.

Are the **continuity and insulation** correct?
If YES, move on to **step 3**.
If NO, replace the **external wiring harness** on the automatic transmission.

Stage 3:

Measure the **resistance of brake 2 solenoid valve** (on connector **R22**) between the following connections:
- Connection code **5R**,
- Connection code **5LW**.

The **resistance** should be between **5.3 Ω ± 0.5 Ω at 20 °C**.

Is the **resistance** correct?
If YES, and if the fault is still present, contact the Techline.
If NO, move on to **step 4**.

Stage 4:

Drain the automatic transmission (see **MR 405, Mechanical, 23A Automatic transmission, Oil change**) and remove the transmission housing (see **MR 405, Mechanical, 23A Automatic transmission, Hydraulic distributor**).
Disconnect the connector from component **754**, measure the **resistance of brake 2 solenoid valve** (on the connector of the **internal wiring harness of the transmission**) between the following connections:
- Connection code **5R**,
- Connection code **5LW**.

The resistance should be **5.3 Ω ± 0.5 Ω at 20 °C**.

Is the **resistance** correct?
If YES, move on to **step 5**.
If NO, move on to **step 6**.

AFTER REPAIR	Deal with any other faults. Clear the fault memory. Switch off the ignition, wait **1 minute** and carry out a road test followed by another check with the **diagnostic tool**.

GETtheMANUALS.org

DF307 CONTINUED 2	

Stage 5:

Measure the **continuity and insulation** of the following connections:
- Connection code **5R**,
- Connection code **5LW**.

Between components **R22 and the internal connector in the transmission**.

Are the **continuity and insulation** correct?
If YES, contact the Techline.
If NO, replace the intermediate wiring harness between connector **R22** and the **internal** connector in the transmission.

Stage 6:

Disconnect the connector from **brake 2 solenoid valve**, measure the **resistance of brake 2 solenoid valve** between the following connections:
- Connection code **5R**,
- Connection code **5LW**.

The **resistance** should be between **5.3 Ω ± 0.5 Ω at 20 °C**.

Is the **resistance** correct?
If YES, move on to **step 7**.
If NO, replace the hydraulic distributor.

Step 7:

Measure the **continuity and insulation** of the following connections:
- Connection code **5R**,
- Connection code **5LW**.

Between **brake solenoid valve 2** and the **internal connector on the transmission**.

Are the **continuity and insulation** correct?
If YES, contact the Techline.
If NO, replace the internal wiring harness on the automatic transmission.

Step 8:

Check **the continuity and insulation** of the following connection:
- Connection code **5LW** between components **119 and 754**.

If the connection or connections are faulty and there is a repair procedure (see **Technical Note 6015A, Electrical wiring repair, Wiring: Precautions for repair**), repair the wiring, otherwise replace it.

If **+ after ignition feed** is not present after checking the **feeds and earths** on the transmission computer, contact the Techline.

AFTER REPAIR	Deal with any other faults. Clear the fault memory. Switch off the ignition, wait **1 minute** and carry out a road test followed by another check with the **diagnostic tool**.

GETtheMANUALS.org

DF307 CONTINUED 3	

STEP 2 (checking the **lockup/brake 1 solenoid valve**):

Look for any damage to the wiring harness, and check the condition and connection of the **automatic transmission computer** and **hydraulic distributor** connectors.
If the connection or connections are faulty and there is a repair procedure (see **Technical Note 6015A, Electrical wiring repair, Wiring: Precautions for repair**), repair the wiring, otherwise replace it.

Check for **+ after ignition feed** on connection **5LW** of component **754**.

Is the **+ after ignition feed** still present?
If YES, move on to **step 1**.
If NO, move on to **step 8**.

Step 1:

Disconnect the connector from component **119**, measure the **resistance of the lockup/brake 1 solenoid valve** (on the connector of component **119**) between the following connections:
- Connection code **5BF**,
- Connection code **5LW**.

The **resistance** should be between **5.3 Ω ± 0.5 Ω at 20 °C**.

Is the **resistance** correct?
If YES, contact the Techline.
If NO, move on to **step 2**.

Step 2:

Disconnect connector **R22** and check **continuity and insulation** of the following connections:
- Connection code **5BF**,
- Connection code **5LW**.

Between component 119 and connector R22.
If the connection or connections are faulty and there is a repair procedure (see **Technical Note 6015A, Electrical wiring repair, Wiring: Precautions for repair**), repair the wiring, otherwise replace it.

Are the **continuity and insulation** correct?
If YES, move on to **step 3**.
If NO, replace the **external wiring harness** on the automatic transmission.

AFTER REPAIR	Deal with any other faults. Clear the fault memory. Switch off the ignition, wait **1 minute** and carry out a road test followed by another check with the **diagnostic tool**.

GETtheMANUALS.org

DF307 CONTINUED 4	

Stage 3:

Measure the **resistance of lockup/brake 1 solenoid valve** (on connector **R22**) between the following connections:

- Connection code **5BF**,
- Connection code **5LW**.

The **resistance** should be **5.3 Ω ± 0.5 Ω at 20 °C**.

Is the **resistance** correct?
If YES, and if the fault is still present, contact the Techline.
If NO, move on to **step 4**.

Stage 4:

Drain the automatic transmission (see **MR 405, Mechanical, 23A Automatic transmission, Oil change**) and remove the transmission housing (see **MR 405, Mechanical, 23A Automatic transmission, Hydraulic distributor**).
Disconnect the connector from component **754**, measure the **resistance of lockup/brake 1 solenoid valve** (on the connector of the **internal wiring harness of the transmission**) between the following connections:

- Connection code **5BF**,
- Connection code **5LW**.

The **resistance** should be **5.3 Ω ± 0.5 Ω at 20 °C**.

Is the **resistance** correct?
If YES, move on to **step 5**.
If NO, move on to **step 6**.

Stage 5:

Measure the **continuity and insulation** of the following connections:

- Connection code **5BF**,
- Connection code **5LW**.

Between components **R22 and the internal connector in the transmission**.

Are the **continuity and insulation** correct?
If YES, contact the Techline.
If NO, replace the intermediate wiring harness between connector **R22** and the **internal** connector in the transmission.

AFTER REPAIR	Deal with any other faults. Clear the fault memory. Switch off the ignition, wait **1 minute** and carry out a road test followed by another check with the **diagnostic tool**.

GETtheMANUALS.org

DF307 CONTINUED 5	

Stage 6:

Disconnect the connector from **lockup/brake 1 solenoid valve**, measure the **resistance of lockup/brake 1 solenoid valve** between the following connections:
- Connection code **5BF**,
- Connection code **5LW**.

The **resistance** should be **5.3 Ω ± 0.5 Ω at 20 °C**.

Is the **resistance** correct?
If YES, move on to **step 7**.
If NO, replace the hydraulic distributor.

Step 7:

Measure the **continuity and insulation** of the following connections:
- Connection code **5BF**,
- Connection code **5LW**.

Between **lockup/brake 1 solenoid valve** and the **internal connector on the transmission**.

Are the **continuity and insulation** correct?
If YES, contact the Techline.
If NO, replace the internal wiring harness on the automatic transmission.

Step 8:

Check **the continuity and insulation** of the following connection:
- Connection code **5LW** between components **119 and 754**.

If the connection or connections are faulty and there is a repair procedure (see **Technical Note 6015A, Electrical wiring repair, Wiring: Precautions for repair**), repair the wiring, otherwise replace it.

If **+ after ignition feed** is not present after checking the **feeds and earths** on the transmission computer, contact the Techline.

AFTER REPAIR	Deal with any other faults. Clear the fault memory. Switch off the ignition, wait **1 minute** and carry out a road test followed by another check with the **diagnostic tool**.

GETtheMANUALS.org

DF308 PRESENT OR STORED	COMPUTER EARTH CO : Open circuit

NOTES	**Conditions for applying fault finding procedures to stored faults:** The fault appears after: switching on the **+ after ignition feed**.
	System effects: Fixed 5th gear engaged. Lockup is inhibited (still open).
	Customer complaint: Fault warning light comes on. Fixed 5th gear engaged.
	Use the Wiring Diagrams Technical Note, ESPACE IV ph2.

Look for any damage to the harness and check the condition and connection of the transmission computer connector and **earths N*** and **MC3**.
If the connection or connections are faulty and there is a repair procedure (see **Technical Note 6015A, Electrical wiring repair, Wiring: Precautions for repair**), repair the wiring, otherwise replace it.

Check **the continuity** of the following connections:
- Connection code **N*** between components **119 and N***.
- Connection code **5LW** between components **119 and MC3**.

If the connection or connections are faulty and there is a repair procedure (see **Technical Note 6015A, Electrical wiring repair, Wiring: Precautions for repair**), repair the wiring, otherwise replace it.

If the fault is still present, contact the Techline.

AFTER REPAIR	Deal with any other faults. Clear the fault memory. Switch off the ignition, wait **1 minute** and carry out a road test followed by another check with the **diagnostic tool**.

GETtheMANUALS.org

The global **conformity check** for the functions and sub-functions of this system is no longer interpreted in the conformity check. Instead, all information available in the functions and sub-functions can be found in the following sections:
For **STATUSES**, refer to the **INTERPRETATION OF STATUSES** section.
For **PARAMETERS**, refer to the **INTERPRETATION OF PARAMETERS** section.
For **COMMANDS**, refer to the **INTERPRETATION OF COMMANDS** section.

GETtheMANUALS.org

Tool status	Diagnostic tool title
ET012	Gear lever position
ET013	Gear engaged
ET018	Brake pedal
ET071	Torque converter
ET086	Downshift request
ET097	Manual mode
ET259	Brake 1
ET260	Brake 2
ET261	Clutch 1
ET262	Clutch 2
ET263	Clutch 3

GETtheMANUALS.org

ET012	GEAR LEVER POSITION

Note:
Status **ET012** is applicable to the following sub-functions:
– **"Gear changes".**
– **"Driver parameters".**

STATUS DEFINITION	P: shows that the gear lever is in position P. R: shows that the gear lever is in position R. N: shows that the gear lever is in position N. D: shows that the gear lever is in position D. M: shows that the gear lever is in position M. FAULT: indicates a gear lever position fault.

NOTES	**Special notes:** Only perform these tests if the statuses do not correspond with the system programming functions.

Conformity check with engine stopped, ignition on or engine running.

P	Check that the lever position **"P"** corresponds with status **ET012**; in the event of a fault, consult the interpretation of fault **DF067 Lever switch circuit.**
	Check the condition of the cable, the setting (see **MR 405 Mechanical, 37A, Automatic gear controls, Adjustment**) and the mountings connecting the lever to the transmission. Replace if necessary.
R	Check that the lever position **"R"** corresponds with status **ET012**; in the event of a fault, consult the interpretation of fault **DF067 Lever position switch circuit**.
	Check the condition of the cable, the setting (see **MR 405 Mechanical, 37A, Automatic gear controls, Adjustment**) and the mountings connecting the lever to the transmission.
N	Check that the lever position **"N"** corresponds with status **ET012**; in the event of a fault, consult the interpretation of fault **DF067 Lever position switch circuit**.
	Check that the lever position **"R"** corresponds with status **ET012**; in the event of a fault, consult the interpretation of fault **DF067 Lever position switch circuit**.

AFTER REPAIR	Carry out a road test, then check with the **diagnostic tool**.

GETtheMANUALS.org

ET012 CONTINUED	
D	Check that the lever position **"D"** corresponds with status **ET012**; in the event of a fault, consult the interpretation of fault **DF067 Lever position switch circuit**.
M	Check that lever position in Manual mode **M** matches status **ET012**; in the event of a fault: Look for any damage to the wiring and check the condition and connection of the connectors for components **119** and **129**. If the connection or connections are faulty and there is a repair procedure (see **Technical Note 6015A, Electrical wiring repair, Wiring: Precautions for repair**), repair the wiring, otherwise replace it.
	Check **the continuity and insulation** of the following connections: ● Connection code **5H** (sequential lever **M+** signal), ● Connection code **5FM** (sequential lever **M-** signal), between components **119** and **129**. Check for **+ 12 V after ignition feed** on connection **AP4** of component **129**. Check for **earth** on connection **N+** of component **129**. If the connection or connections are faulty and there is a repair procedure (see **Technical Note 6015A, Electrical wiring repair, Wiring: Precautions for repair**), repair the wiring, otherwise replace it.
	If the fault is still present, contact Techline.
FAULT	Check that each lever position in **"P","R","N","D","M",** corresponds to status **ET012**.
	In the event of a fault, for positions **"P","R","N","D",** consult the interpretation of fault **DF067 "Lever position switch circuit".** In the event of a fault on position **M"** (see **ET012, "M")**

AFTER REPAIR	Carry out a road test, then check with the **diagnostic tool**.

GETtheMANUALS.org

ET013	GEAR ENGAGED

Note:
Status **ET013** is applicable to the following sub-functions:
– **"Gear changes".**
– **"Driver parameters".**

STATUS DEFINITION	**1:** indicates that the gear engaged is 1st gear. **2:** shows that the gear engaged is 2nd gear. **3:** shows that the gear engaged is 3rd gear. **4:** shows that the gear engaged is 4th gear. **5:** shows that the gear engaged is 5th gear. **6:** shows that the gear engaged is 6th gear. **R:** shows that the gear engaged is Reverse gear. **INVALID:** shows that the transmission ratio is incorrect. **DISENGAGE:** shows that the clutch disengagement function while vehicle stationary is active. **P/N:** shows that the transmission is either in "Park" or "Neutral" mode.

NOTES	**Special notes:** This status indicates clutch disengagement when stopped ("DISENGAGEMENT"), the various gears engaged (1, 2, 3, 4, 5, 6, "R"), the parking brake and neutral positions ("P" and "N") when a fault appears on the lever.

Conformity check with engine stopped and ignition on

1 **2** **3**	Check (engine stopped, ignition on and brake pedal depressed), lever in position **"M", ET013 = "1", "2" or "3"**.
	In the event of a fault, consult the interpretation of faults **DF067 Lever position switch circuit** and **DF301 Clutch pressure switch circuit 1**.
	If the fault is still present, contact Techline.
R	Check (engine stopped, ignition on and brake pedal depressed), lever in position **"R", ET013= "R"**.
	In the event of a fault, consult the interpretation of faults **DF067 Lever position switch circuit, DF304 Brake pressure switch circuit 1** and **DF306 Lockup/brake solenoid valve circuit 1**.
	If the fault is still present, contact Techline.
SIGNAL	In the event of a fault, consult the interpretation of fault **DF298 Gear shifts**
AFTER REPAIR	Carry out a road test, then check with the **diagnostic tool**.

GETtheMANUALS.org

ET013 CONTINUED	

P/N	Check (engine stopped, ignition on and brake pedal depressed), lever in position **"P" or "N", ET013 = "P" or "N"**.
	In the event of a fault, consult the interpretation of faults **DF067 Lever position switch circuit and DF086 Sequence solenoid valve EVS2 circuit**.
	If the fault is still present, contact Techline.

Conformity check with the engine running.

1 2 3	Check (engine running and brake pedal depressed), lever in position **"M", ET013 = "1", "2", "3"**.
	In the event of a fault, consult the interpretation of faults **DF067 Lever position switch circuit and DF301 Clutch pressure switch circuit 1**.
	If the fault is still present, contact Techline.
DISENGAGE (clutch disengagement)	Check (engine running at idle speed and brake pedal depressed), status **ET261 "Clutch 1"** lever in **"D"** position: **ET013 = "1"** -> status **ET261 "Clutch 1"** is "**Active**"; if status **ET013** is "**Disengaged**" (clutch disengaged when stationary) **ET261 "Clutch 1"** is "**Inactive**".
	In the event of a fault, consult the interpretation of fault **DF067 Gear position switch circuit**.
	If the fault is still present, contact Techline.

*EVS2: sequence solenoid valve 2

AFTER REPAIR	Carry out a road test, then check with the **diagnostic tool**.

GETtheMANUALS.org

ET013 CONTINUED	

4 **5** **6**	These statuses only arise during the road test, with the lever in position **"D" or "M", ET013 = "4", "5", "6"**. **IMPORTANT** It is essential to have 2 people to perform these checks during a road test.
	In the event of a fault, consult the interpretation of faults **DF067 "Lever position switch circuit"** and **DF303 "Clutch 3 pressure switch circuit"**.
	If the fault is still present, contact Techline.

R	Check (engine running and brake depressed), lever in position **"R", ET013 = "R"**.
	In the event of a fault, consult the interpretation of faults **DF067 Lever position switch circuit, DF304 Brake pressure switch circuit 1** and **DF306 Lockup/brake solenoid valve circuit 1**.
	If the fault is still present, contact Techline.

AFTER REPAIR	Carry out a road test, then check with the **diagnostic tool**.

GETtheMANUALS.org

ET018	BRAKE PEDAL

Note:
Status **ET018** is applicable to the following sub-functions:
– "Driver parameters".

STATUS DEFINITION	**DEPRESSED**: shows that the brake pedal is depressed. **RELEASED**: shows that the brake pedal is released. **STATUS1**: shows that the brake switch signal is invalid.

NOTES	**Special notes:** Apply the conformity check to see if the statuses are consistent with the operating programs of the system.

Conformity check with engine stopped, ignition on or engine running.

"DEPRESSED"
(Brake pedal depressed)

When the driver depresses the brake pedal, status **ET018** becomes **DEPRESSED**.
If the driver depresses the brake pedal and status **ET018 Brake pedal** remains **RELEASED** with the lights operating:
Check the insulation, continuity and the absence of interference resistance on the following connection:
– Connection code **5A** between the brake light switch connector, **component code 160** and the transmission computer, component code **119**.
If the connection or connections are faulty and there is a repair procedure (see **Technical Note 6015A, Electrical wiring repair, Wiring: Precautions for repair**), repair the wiring, otherwise replace it.
– Remove the brake light switch and carry out the following checks:

	Continuity between connections	Insulation between connections
Brake pedal depressed	**65A and SP17**	**5A and BPT**
Brake pedal released	**5A and BPT**	**65A and SP17**

If the checks are not in order, replace the brake light switch.

If the driver depresses the brake pedal and status **ET018** becomes **DEPRESSED** and the brake lights are not operating:
– Check the condition and fitting of the **brake light switch**, the **brake light fuse** and **the brake light bulbs**.
– Check for **+ after ignition feed** on connections **SP17** and **BPT** on the **brake light switch**.

AFTER REPAIR	Carry out a road test, then check with the **diagnostic tool**.

GETtheMANUALS.org

ET018 CONTINUED	
"RELEASED" (Brake pedal released)	When the driver releases the brake pedal, status **ET018** becomes **RELEASED**. If this does not happen, check that the brake light switch is in good condition and operating correctly by carrying out the checks associated with status **DEPRESSED**.
STATUS 1:	Check the status and operation of the brake light switch by performing the checks associated with the "**DEPRESSED**" status.

AFTER REPAIR	Carry out a road test, then check with the **diagnostic tool**.

GETtheMANUALS.org

ET071	TORQUE CONVERTER

Note:
Status **ET071** is applicable to the following sub-function:
– "Gear changes".

STATUS DEFINITION	**OPEN**: shows that the torque converter is not locked up. **SLIPPING**: shows that the torque converter is either in an open -> lockup phase or in a lockup -> open phase. **CLOSED**: shows that the torque converter is locked up. **INVALID**: shows that the torque converter is faulty.
NOTES	**Special notes:** Apply the conformity check to see if the statuses are consistent with the operating programs of the system.

Note:
In manual mode, the torque converter is always locked up.

Conformity check with engine stopped and ignition on

OPEN	With the engine stationary, in position "N", status **ET071** should be **OPEN**. In the event of a fault, consult the interpretation of fault **DF097 "Torque converter lockup"**.

Conformity check with the engine running.

OPEN	In the event of a fault, consult the interpretation of fault **DF097 "Torque converter lockup"**.
SLIPPING	This status involves slip action when changing gear during a road test. **IMPORTANT** It is essential to have 2 people to perform these checks during a road test. In the event of a fault, consult the interpretation of fault **DF097 "Torque converter lockup"**.
CLOSED	Check (engine running at idle speed and brake pedal depressed), lever in position **"R", ET013 "Gear engaged" = "R"** or lever in position **"M", ET013 "Gear engaged" = "1", "2", "3"**. In the event of a fault, consult the interpretation of fault **DF097 "Torque converter lockup"**.
SIGNAL	Consult the interpretation of fault **DF097 "Torque converter lockup"**.
AFTER REPAIR	Carry out a road test, then check with the **diagnostic tool**.

GETtheMANUALS.org

ET086	DOWNSHIFT REQUEST

Note:
Status **ET086** is applicable to the following sub-functions:
– "Gear changes".
– "Driver parameters".

STATUS DEFINITION	**ACTIVE**: shows that the downshift mode is active. **INACTIVE**: shows that the downshift mode is inactive or is faulty during a downshift request.

NOTES	**Special notes:** This status arises with the engine running, the vehicle in motion and during a fast downshift with the accelerator pedal fully depressed.

Conformity check with engine stopped, ignition on or engine running.

INACTIVE	Status **ET086** should be "**INACTIVE**", with the engine stopped and ignition on. If status **ET086** is "**ACTIVE**", perform the following checks:
	Run a multiplex network test (see **88B, Multiplex**).
	Carry out a test on the engine management computer **(**(see **13B, Diesel injection, Conformity check**) (**EDC16 CP33 M9R 721**)**)**.
	If the fault is still present, contact Techline.

ACTIVE	Status **ET086** must be "**ACTIVE**" when the accelerator pedal is fully depressed. If status **ET086** remains "**INACTIVE**", perform the following checks:
	Run a multiplex network test (see **88B, Multiplex**).
	Carry out a test on the engine management computer **(**(see **13B, Diesel injection, Conformity check**) (**EDC16 CP33 M9R 721**)**)**.
	If the fault is still present, contact Techline.

AFTER REPAIR	Carry out a road test, then check with the **diagnostic tool**.

GETtheMANUALS.org

ET097	MANUAL MODE

Note:
Status **ET097** is applicable to the following sub-functions:
– **"Gear changes".**
– **"Driver parameters".**

STATUS DEFINITION	**INACTIVE**: indicates that the manual mode is inactive whenever the gear lever is not in "**M**" position, or when manual mode is faulty. **M+:** shows that the gear lever is in position **M+**. **M-:** shows that the gear lever is in position **M-**. **ACTIVE**: indicates that manual mode is active when the gear lever is in position "**M**".

NOTES	**Special notes:** Apply the conformity check to see if the statuses are consistent with the operating programs of the system.

Conformity check with engine stopped, ignition on or engine running.

INACTIVE	Check that, with gear lever in a position other than "**M**", status **ET097** is "**INACTIVE**". If a fault occurs, check that status **ET012 "Gear lever position"** corresponds to the lever position. Look for any damage to the wiring and check the condition and connection of the connectors for components **119** and **129**. If the connections are faulty and there is a repair procedure (see **Technical Note 6015A, Electrical wiring repair, Wiring: Precautions for repair**), repair the wiring, otherwise replace it.
	Check **the continuity and insulation** of the following connections: ● Connection code **5H** (sequential lever **M+** signal), ● Connection code **5FM** (sequential lever **M-** signal), between components **119 and 129**. Check for **+ 12 V after ignition feed** on connection **AP43** of component **129**. Check for **earth** on connection **N+** of component **129**. If the connection or connections are faulty and there is a repair procedure (see **Technical Note 6015A, Electrical wiring repair, Wiring: Precautions for repair**), repair the wiring, otherwise replace it.

AFTER REPAIR	Carry out a road test, then check with the **diagnostic tool**.

GETtheMANUALS.org

ET097 CONTINUED 1	

M+	Check that, with gear lever in position "**M+**", status **ET097** is "**M+**". In the event of a fault, check that status **ET012 "Gear lever position"** corresponds to the lever position in Manual mode "**M**". Check, by moving the gear lever to "**M+**" and "**M-**", that the two positions correspond to the two statuses "**M+**" and "**M-**" of status **ET097**. Look for any damage to the wiring and check the condition and connection of the connectors for components **119** and **129**. If the connection or connections are faulty and there is a repair procedure (see **Technical Note 6015A, Electrical wiring repair, Wiring: Precautions for repair**), repair the wiring, otherwise replace it.
	Check **the continuity and insulation** of the following connections: ● Connection code **5H** (**M+** sequential lever signal) between components **119 and 129.** Check for **+ 12 V after ignition feed** on connection **AP43** of component **129**. Check for **earth** on connection **N+** of component **129**. If the connection or connections are faulty and there is a repair procedure (see **Technical Note 6015A, Electrical wiring repair, Wiring: Precautions for repair**), repair the wiring, otherwise replace it.
M-	Check that, with gear lever in position "**M-**", status **ET097** is "**M-**". In the event of a fault, check that status **ET012 "Gear lever position"** corresponds to the lever position in Manual mode "**M**". Check, by moving the gear lever to "**M+**" and "**M-**", that the two positions correspond to the two statuses "**M+**" and "**M-**" of status **ET097**. Look for any damage to the wiring and check the condition and connection of the connectors for components **119** and **129**. If the connection or connections are faulty and there is a repair procedure (see **Technical Note 6015A, Electrical wiring repair, Wiring: Precautions for repair**), repair the wiring, otherwise replace it.
	Check the **continuity and insulation** of the following connections: ● Connection code **5FM** (**M -** sequential lever switch control) between components **119 and 129.** Check for **+ 12 V after ignition feed** on connection **AP43** of component **129**. Check for **earth** on connection **N+** of component **129**. If the connection or connections are faulty and there is a repair procedure (see **Technical Note 6015A, Electrical wiring repair, Wiring: Precautions for repair**), repair the wiring, otherwise replace it.

AFTER REPAIR	Carry out a road test, then check with the **diagnostic tool**.

GETtheMANUALS.org

ET097 CONTINUED 2	

ACTIVE	Check that, with gear lever in position "**M**", status **ET097** is "**ACTIVE**". In the event of a fault, check that status **ET012 "Gear lever position"** corresponds to the lever position in Manual mode "**M**". Check, by moving the gear lever to "**M+**" and "**M-**", that the two positions correspond to the two statuses "**M+**" and "**M-**" of status **ET097**. Look for any damage to the wiring and check the condition and connection of the connectors for components **119** and **129**. If the connection or connections are faulty and there is a repair procedure (see **Technical Note 6015A, Electrical wiring repair, Wiring: Precautions for repair**), repair the wiring, otherwise replace it.
	Check **the continuity and insulation** of the following connections: ● Connection code **5H** (sequential lever **M+** signal), ● Connection code **5FM** (sequential lever **M-** signal), between components **119 and 129**. Check for **+ 12 V after ignition feed** on connection **AP43** of component **129**. Check for **earth** on connection **N+** of component **129**. If the connection or connections are faulty and there is a repair procedure (see **Technical Note 6015A, Electrical wiring repair, Wiring: Precautions for repair**), repair the wiring, otherwise replace it.

AFTER REPAIR	Carry out a road test, then check with the **diagnostic tool**.

GETtheMANUALS.org

ET259	BRAKE 1

Note:
Status **ET259** is applicable to the following sub-function:
– "Gear changes".

STATUS DEFINITION	**ACTIVE**: shows that brake 1 is active. **INACTIVE**: shows that brake 1 is inactive.

NOTES	**Special notes:** With the engine running, check that status **ET259 Brake 1** is **active**, gear engaged "R".

Conformity check with the engine running.

ACTIVE	Check (engine running at idle speed and brake pedal depressed), lever in position **"R", ET013 "Gear engaged" = "R"** or lever in position **"M", ET013 "Gear engaged" = "1"**.
	In the event of a fault, consult the interpretation of faults **DF304 Brake 1 pressure switch circuit** and **DF306 lockup/brake 1 solenoid valve circuit**.
	If the fault is still present, contact Techline.

INACTIVE	Status **ET259** should be "**INACTIVE**" on all other gear ratios except: - Lever in position **"R"**, status ET013 **"Gear engaged"** = "R". - Lever in position **"M",** status **ET013 "Gear engaged" = "1**".
	In the event of a fault, consult the interpretation of faults **DF304 Brake pressure switch circuit 1** and **DF306 Lockup/brake solenoid valve circuit 1**.
	If the fault is still present, contact Techline.

AFTER REPAIR	Carry out a road test, then check with the **diagnostic tool**.

GETtheMANUALS.org

ET260	BRAKE 2

Note:
Status **ET260** is applicable to the following sub-function:
– "Gear changes".

STATUS DEFINITION	**ACTIVE**: shows that brake 2 is active. **INACTIVE**: shows that brake 2 is inactive.

NOTES	**Special notes:** With the engine running, check that status **ET260** is **"Active"**, gear engaged 2 in mode **"M"**.

Conformity check with the engine running.

ACTIVE	Check (engine running at idle speed and brake pedal depressed): - Lever in position **"M"**, **ET013 "Gear engaged" = "2**". (Only during a road test, status **ET260** is **"Active**", when status **ET013 "Gear engaged" = "2", "6"** in mode **"D"** or when status **ET013 "Gear engaged" = "6"** in mode **"M"**). - Lever in position **"D":** **ET013 "Gear engaged" = "1"** -> status **ET260** is "**Inactive**"; if status **ET013 "Gear engaged"** is "**Disengaged**" (disengaging clutch when stationary) -> **ET260** is "**Active**".
	In the event of a fault, consult the interpretation of faults **DF300 Brake solenoid valve circuit 2** and **DF305 Brake pressure switch circuit 2**.
	If the fault is still present, contact Techline.

INACTIVE	Status **ET260** should be "**INACTIVE**" on all other gear ratios except: - Lever in position **"M",** status **ET013 "Gear engaged"** = "**2**". - Lever in position **"D":** **ET013 "Gear engaged" = "1"** -> status **ET260** is "**Inactive**"; if status **ET013 "Gear engaged"** is "**Disengaged**" (disengaging clutch when stationary) -> **ET260** is "**Active**".
	In the event of a fault, consult the interpretation of faults **DF300 Brake solenoid valve circuit 2** and **DF305 Brake pressure switch circuit 2**.
	If the fault is still present, contact Techline.

AFTER REPAIR	Carry out a road test, then check with the **diagnostic tool**.

GETtheMANUALS.org

ET261	CLUTCH 1

Note:
Status **ET261** is applicable to the following sub-function:
– "Gear changes".

STATUS DEFINITION	**ACTIVE**: shows that clutch 1 is active. **INACTIVE**: shows that clutch 1 is inactive.

NOTES	**Special notes:** Check (engine running) that status **ET261** is **Active**, gear engaged 1, 2, 3 in mode **"M"**.

Conformity check with the engine running.

ACTIVE	Check (engine running at idle speed and brake pedal depressed): – Lever in **"M" position, ET013 "Gear engaged" = "1", "2", "3**".(Only during a road test, status **ET261** is "**Active**", when status **ET013 "Gear engaged" = "2", "3", "4"** in mode **"D"** or when status **ET013 "Gear engaged" = "4"** in mode **"M"**). – Lever in position **"D":** **ET013 "Gear engaged" = "1"** -> status **ET261** is "**ACTIVE**"; if status **ET013 "Gear engaged"** is "**DISENGAGED**" (disengaging clutch when stationary) -> **ET261** is "**INACTIVE**".
	In the event of a fault, consult the interpretation of faults **DF273 Clutch solenoid valve circuit 1** and **DF301 Clutch pressure switch circuit 1**.
	If the fault is still present, contact Techline.

INACTIVE	Status **ET261 "Clutch 1"** must be "**INACTIVE**" on all other gear ratios except: – Lever in **"M"** position, status **ET013 "Gear engaged" = "1", "2", "3"**. – Lever in position **"D":** **ET013 "Gear engaged" = "1"** -> status **ET261 "Clutch 1"** is "INACTIVE"; if status **ET013 "Gear engaged"** is "DISENGAGED" (disengaging clutch when stationary) -> **ET261 "Clutch 1"** is "**INACTIVE**".
	In the event of a fault, consult the interpretation of faults **DF273 Clutch solenoid valve circuit 1** and **DF301 Clutch pressure switch circuit 1**.
	If the fault is still present, contact Techline.

AFTER REPAIR	Carry out a road test, then check with the **diagnostic tool**.

GETtheMANUALS.org

ET262	CLUTCH 2

Note:
Status **ET262** is applicable to the following sub-function:
– "Gear changes".

STATUS DEFINITION	**ACTIVE**: shows that clutch 2 is active. **INACTIVE**: shows that clutch 2 is inactive.

NOTES	**Special notes:** Check (engine running) that status **ET262** is **"Active"**, gear engaged 3, "R".

Conformity check with the engine running.

ACTIVE	Check (engine running at idle speed and brake pedal depressed), lever in position **"R", ET013 "Gear engaged" = "R"** or lever in position **"M"**, **ET013 "Gear engaged" = "3"**.
	In the event of a fault, consult the interpretation of faults **DF274 Clutch solenoid valve circuit 2** and **DF302 Clutch pressure switch circuit 2**.
	If the fault is still present, contact Techline.

INACTIVE	Status **ET262** should be "**INACTIVE**" on all other gear ratios except: – Lever in position **"R"**, status **ET013 "Gear engaged" = "R"**. (Only during a road test, status **ET262** is "Active", when status **ET013 "Gear engaged" = "3", "5"** in mode **"D"** or when status **ET013 "Gear engaged" = "5"** in mode **"M"**). – Lever in position **"M"**, **ET013 "Gear engaged" = "3"**.
	In the event of a fault, consult the interpretation of faults **DF274 Clutch solenoid valve circuit 2** and **DF302 Clutch pressure switch circuit 2**.
	If the fault is still present, contact Techline.

AFTER REPAIR	Carry out a road test, then check with the **diagnostic tool**.

GETtheMANUALS.org

ET263	CLUTCH 3

Note:
Status **ET263** is applicable to the following sub-function:
– "Gear changes".

STATUS DEFINITION	**ACTIVE:** shows that clutch 3 is active. **INACTIVE**: shows that clutch 3 is inactive.

NOTES	**Special notes:** Check (engine running) that status **ET263** is **active**, gear engaged 4, 5, 6.

Conformity check during a road test.

ACTIVE	Status **ET263** becomes "**ACTIVE**" for the following gears engaged: This status only arises during the road test, with the lever in position **"D"** or **"M", ET013 "Gear engaged" = "4", "5", "6**". **IMPORTANT** It is essential to have 2 people to perform these checks during a road test.
	In the event of a fault, consult the interpretation of faults **DF275 Clutch solenoid valve circuit 3 and DF303 Clutch pressure switch circuit 3**.
	If the fault is still present, contact Techline.

INACTIVE	Status **ET263** should be "**INACTIVE**" on all other gear ratios except: – Lever in **"D"** position, status **ET013 "Gear engaged" = "4", "5", "6"**. – Lever in **"M"** position, status **ET013 "Gear engaged" = "4", "5", "6**". In the event of a fault, consult the interpretation of faults **DF275 Clutch solenoid valve circuit 3** and **DF303 Clutch pressure switch circuit 3**. If the fault is still present, contact Techline.

AFTER REPAIR	Carry out a road test, then check with the **diagnostic tool**.

GETtheMANUALS.org

Tool parameter	Diagnostic tool title
PR004	Gearbox oil temperature
PR006	Engine speed
PR007	Turbine speed
PR008	Computer voltage supply
PR022	Accelerator pedal position
PR067	Calculated accelerator pedal position
PR105	Vehicle speed
PR106	Effective engine torque
PR123	Calculated engine torque
PR153	Slow torque setpoint
PR154	Rapid torque setpoint

GETtheMANUALS.org

PR004	TRANSMISSION OIL TEMPERATURE

PARAMETER DEFINITION	This parameter shows the gearbox oil temperature in ˚**C**.

NOTES	**Special notes:** Only perform these tests if the parameters do not correspond with the system operation programming. **No faults should be present or stored.**

Conformity check with engine running, engine coolant temperature > 80 ˚C

With the engine running at idle speed, the gearbox oil temperature varies in accordance with the engine coolant temperature.
- 40 ˚C > PR004 > 150 ˚C
In the event of a fault, consult the interpretation of fault **DF023 Gearbox oil temperature sensor**.

Sensor electrical conformity

Disconnect the connector of component **119**, measure the **resistance of the oil temperature sensor** (on the connector of component **119**) between the following connections:
- Connection code **5BZ**,
- Connection code **5BY**.

The **resistance** should be between:
– **4.208 ± 0.42 kΩ at 20 ˚C,**
– **1.947 ± 0.19 kΩ at 40 ˚C,**
– **0.988 ± 0.09 kΩ at 60 ˚C.**

In the event of a fault, consult the interpretation of fault **DF023 Gearbox oil temperature sensor**.

AFTER REPAIR	Carry out a road test, then check with the **diagnostic tool**.

GETtheMANUALS.org

PR006	ENGINE SPEED

Note:
Parameter **PR006** is applicable to the following sub-functions:
- **"Gear changes".**
- **"Torque activation".**
- **"Driver parameters".**

PARAMETER DEFINITION	This parameter shows the engine speed in **rpm**.

NOTES	**Special notes:** Only perform these tests if the parameters do not correspond with the system operation programming. **No faults should be present or stored.**

Conformity check with engine stopped and ignition on

PR006 = 0 rpm
In the event of a fault, carry out a multiplex network test (see **88B, Multiplex**), consult the interpretation of fault **(see interpretation of faults, DF195 Camshaft/engine speed sensor consistency" 13B EDC16 CP33 M9R 721).**

Conformity check with engine at idle speed, engine coolant temperature > 80 ˚C

PR006 ≈ 800 rpm.
In the event of a fault, check the interpretation of fault **(see 13B EDC16 CP33 M9R 721, Interpretation of faults, DF195 "Camshaft sensor/engine speed consistency").**

AFTER REPAIR	Carry out a road test, then check with the **diagnostic tool**.

GETtheMANUALS.org

PR007	TURBINE SPEED

Note:
Parameter **PR007** is applicable to the following sub-functions:
- **"Gear changes".**
- **"Torque activation".**

PARAMETER DEFINITION	This parameter shows the gearbox turbine speed in **rpm**.

NOTES	**Special notes:** Only perform these tests if the parameters do not correspond with the system operation programming. **No faults should be present or stored.**

Conformity check with engine stopped and ignition on

PR007 = 0 rpm
In the event of a fault, consult the interpretation of fault **DF038 Turbine speed sensor circuit**.

Conformity check with engine running, engine coolant temperature > 80 ˚C

PR007 "Turbine speed"	PR006 "Engine speed"	PR004 "Gearbox oil temperature"	ET013 "Gear engaged"	ET012 "Gear lever position"
0 rpm	≈ 800 rpm	25 ˚C	1	D
≈ 660 rpm	≈ 800 rpm	25 ˚C	DISENGAGE (clutch disengagement)	D

In the event of a fault, consult the interpretation of fault **DF038 Turbine speed sensor circuit**.

AFTER REPAIR	Carry out a road test, then check with the **diagnostic tool**.

GETtheMANUALS.org

PR008	COMPUTER SUPPLY VOLTAGE

PARAMETER DEFINITION	This parameter shows the computer feed voltage in **volts**.

NOTES	**Special notes:** Only perform these tests if the parameters do not correspond with the system operation programming. **No faults should be present or stored.**

Conformity check with engine stopped and ignition on, or engine running, and engine coolant temperature > 80 ˚C

Look for any damage to the wiring and check the condition and connection of the connectors for components **119** and **1337**.
If the connection or connections are faulty and there is a repair procedure (see **Technical Note 6015A, Electrical wiring repair, Wiring: Precautions for repair**), repair the wiring, otherwise replace it.

Check **the continuity and insulation** of the following connections:
- Connection code **BP42** between components **119 and 1337.**
- Connection code **AP4** between components **119 and 1337**.

Check for **+ 12 V after ignition feed** on connection **BP42** of component **119**.
Check for **+ 12 V after ignition feed** on connection **AP4** of component **119**.
If the connection or connections are faulty and there is a repair procedure (see **Technical Note 6015A, Electrical wiring repair, Wiring: Precautions for repair**), repair the wiring, otherwise replace it.

Check for earth on connection **N** of component **119**.
If the connection or connections are faulty and there is a repair procedure (see **Technical Note 6015A, Electrical wiring repair, Wiring: Precautions for repair**), repair the wiring, otherwise replace it.

If the fault is still present, contact Techline.

AFTER REPAIR	Carry out a road test, then check with the **diagnostic tool**.

GETtheMANUALS.org

PR022	ACCELERATOR PEDAL POSITION

Note:
Parameter **PR022** is applicable to the following sub-functions:
- **"Gear changes".**
- **"Torque activation".**
- **"Driver parameters".**

PARAMETER DEFINITION	This parameter indicates the accelerator pedal position as a **%**.

NOTES	**Special notes:** Only perform these tests if the parameters do not correspond with the system operation programming. **No faults should be present or stored.**

Conformity check with engine stopped and ignition on

Full load: **PR022 ≈ 114 %** and **PR067 Calculated accelerator pedal position = 100 %**.
In the event of a fault (see **13B EDC16 CP33 M9R 721, Interpretation of faults, DF196 "Pedal sensor gang 1 circuit" or DF198 "Pedal sensor gang 2 circuit"**).

AFTER REPAIR	Carry out a road test, then check with the **diagnostic tool**.

GETtheMANUALS.org

PR067	CALCULATED ACCELERATOR PEDAL POSITION

Note:
Parameter **PR067** is applicable to the following sub-functions:
- **"Gear changes".**
- **"Torque activation".**

PARAMETER DEFINITION	This signal is supplied by the injection computer when the cruise control/speed limiter is operating and when there is no longer a signal from the accelerator pedal. This parameter indicates the accelerator pedal position as a **%**.

NOTES	**Special notes:** Only perform these tests if the parameters do not correspond with the system operation programming. **No faults should be present or stored.**

Conformity check with engine stopped and ignition on, or engine running, and engine coolant temperature > 80 ˚C

Full load: **PR022 Accelerator pedal position ≈ 114 %** and **PR067 = 100 %.**
In the event of a fault (see **13B EDC16 CP33 M9R 721, Interpretation of faults, DF196 "Pedal sensor gang 1 circuit" or DF198 "Pedal sensor gang 2 circuit"**).

AFTER REPAIR	Carry out a road test, then check with the **diagnostic tool**.

GETtheMANUALS.org

PR105	VEHICLE SPEED

Note:
Parameter **PR105** is applicable to the following sub-functions:
- **"Gear changes".**
- **"Driver parameters".**

PARAMETER DEFINITION	This parameter indicates the vehicle speed in **mph (km/h)**.

NOTES	**Special notes:** Only perform these tests if the parameters do not correspond with the system operation programming. **No faults should be present or stored.**

Conformity check with engine stopped and ignition on.

0 mph (km/h)
In the event of a fault, consult the interpretation of fault **DF171 Vehicle speed sensor circuit**.

Conformity check with engine running, engine coolant temperature > 80 ˚C

In the event of a fault, consult the interpretation of fault **DF171 Vehicle speed sensor circuit**.

AFTER REPAIR	Carry out a road test, then check with the **diagnostic tool**.

GETtheMANUALS.org

PR106	EFFECTIVE ENGINE TORQUE

Note:
Parameter **PR106** is applicable to the following sub-functions:
- **"Gear changes".**
- **"Torque activation".**

PARAMETER DEFINITION	This parameter indicates the effective engine torque in **Nm**. This signal is supplied to the gearbox computer by the injection computer.

NOTES	**Special notes:** Only perform these tests if the parameters do not correspond with the system operation programming. **No faults should be present or stored.**

Conformity check with engine ignition on and engine running at idle speed.

PR006 "Engine speed"	PR007 "Turbine speed"	PR106 "Effective engine torque"	PR153 "Slow torque"	PR154 "Fast torque"
0 rpm	0 rpm	140 Nm	360 Nm	- 32 Nm
≈ 802 rpm	≈ 704 rpm	≈ 34 Nm	≈ 360 Nm	≈ - 30 Nm

In the event of a fault, carry out a multiplex network test (see **88B, Multiplexing**).

AFTER REPAIR	Carry out a road test, then check with the **diagnostic tool**.

GETtheMANUALS.org

PR153	SLOW TORQUE SETPOINT

Note:
Parameter **PR153** is applicable to the following sub-function:
– **"Slow torque activation".**

PARAMETER DEFINITION	This parameter indicates the slow torque setpoint in **Nm**.

NOTES	**Special notes:** Only perform these tests if the parameters do not correspond with the system operation programming. **No faults should be present or stored.**

Conformity check with engine ignition on and engine running at idle speed.

PR006 "Engine speed"	PR007 "Turbine speed"	PR106 "Effective engine torque"	PR153 "Slow torque"	PR154 "Fast torque"
0 rpm	0 rpm	140 Nm	360 Nm	- 32 Nm
≈ 802 rpm	≈ 704 rpm	≈ 34 Nm	≈ 360 Nm	≈ - 30 Nm

In the event of a fault, carry out a multiplex network test (see **88B, Multiplexing**).

AFTER REPAIR	Carry out a road test, then check with the **diagnostic tool**.

GETtheMANUALS.org

PR154	FAST TORQUE SETPOINT

Note:
Parameter **PR154** is applicable to the following sub-function:
– **"Torque activation".**

PARAMETER DEFINITION	This parameter indicates the fast torque setpoint in **Nm**.

NOTES	**Special notes:** Only perform these tests if the parameters do not correspond with the system operation programming. **No faults should be present or stored.**

Conformity check with engine ignition on and engine running at idle speed.

PR006 "Engine speed"	PR007 "Turbine speed"	PR106 "Effective engine torque"	PR153 "Slow torque"	PR154 "Fast torque"
0 rpm	0 rpm	140 Nm	360 Nm	- 32 Nm
≈ 802 rpm	≈ 704 rpm	≈ 34 Nm	≈ 360 Nm	≈ - 30 Nm

In the event of a fault, carry out a multiplex network test (see **88B, Multiplexing**).

AFTER REPAIR	Carry out a road test, then check with the **diagnostic tool**.

GETtheMANUALS.org

Tool command	Diagnostic tool title
AC002	Shift solenoid 1
AC003	Shift solenoid 2
AC026	Clutch 1 solenoid valve
AC029	Clutch 2 solenoid valve
AC030	Clutch 3 solenoid valve
AC031	Brake 1 solenoid valve
AC032	Brake 2 solenoid valve
AC086	"LS*" pressure regulation solenoid valve
AC088	Gear lever locking electromagnet
RZ001	Stored fault(s)

*LS pressure: line pressure.

GETtheMANUALS.org

AC002	SHIFT SOLENOID 1

NOTES	**Special notes:** Engine speed zero, vehicle speed zero and gear lever in position P

Switch on the ignition and run command **AC002**.
In the event of a fault, consult the interpretation of fault **DF085 Sequence solenoid valve EVS1 circuit**.

AFTER REPAIR	Carry out a road test, then check with the **diagnostic tool**.

GETtheMANUALS.org

AC003	SHIFT SOLENOID 2

NOTES	**Special notes:** Engine speed zero, vehicle speed zero and gear lever in position P

Switch on the ignition and run command **AC003**.
In the event of a fault, consult the interpretation of fault **DF086 Sequence solenoid valve EVS2 circuit**.

***EVS1 = Sequence solenoid valve 1**

AFTER REPAIR	Carry out a road test, then check with the **diagnostic tool**.

GETtheMANUALS.org

AC026	CLUTCH 1 SOLENOID VALVE

NOTES	**Special notes:** Engine speed zero, vehicle speed zero and gear lever in position P

Switch on the ignition and run command **AC026**.
In the event of a fault, consult the interpretation of fault **DF273 Clutch 1 solenoid valve circuit**.

AFTER REPAIR	Carry out a road test, then check with the **diagnostic tool**.

GETtheMANUALS.org

AC029	CLUTCH 2 SOLENOID VALVE

NOTES	**Special notes:** Engine speed zero, vehicle speed zero and gear lever in position P

Switch on the ignition and run command **AC029**.
In the event of a fault, consult the interpretation of fault **DF274 Clutch solenoid valve circuit 2**.

AFTER REPAIR	Carry out a road test, then check with the **diagnostic tool**.

GETtheMANUALS.org

AC030	CLUTCH 3 SOLENOID VALVE

NOTES	**Special notes:** Engine speed zero, vehicle speed zero and gear lever in position P

Switch on the ignition and run command **AC030**.
In the event of a fault, consult the interpretation of fault **DF275 Clutch solenoid valve circuit 3**.

AFTER REPAIR	Carry out a road test, then check with the **diagnostic tool**.

GETtheMANUALS.org

AC031	BRAKE 1 SOLENOID VALVE

NOTES	**Special notes:** Engine speed zero, vehicle speed zero and gear lever in position P

Switch on the ignition and run command **AC031**.
In the event of a fault, consult the interpretation of fault **DF306 "Lockup/brake 1 solenoid valve circuit"**.

AFTER REPAIR	Carry out a road test, then check with the **diagnostic tool**.

GETtheMANUALS.org

AC032	BRAKE 2 SOLENOID VALVE

NOTES	**Special notes:** Engine speed zero, vehicle speed zero and gear lever in position P

Switch on the ignition and run command **AC032**.
In the event of a fault, consult the interpretation of fault **DF305 "Brake solenoid valve circuit 2"**.

AFTER REPAIR	Carry out a road test, then check with the **diagnostic tool**.

GETtheMANUALS.org

AC086	"LS*" PRESSURE REGULATION SOLENOID VALVE

NOTES	**Special notes:** Engine speed zero, vehicle speed zero and gear lever in position P

Switch on the ignition and run command **AC086**.
In the event of a fault, consult the interpretation of fault **DF091 "LS*" pressure regulation solenoid valve circuit"**.

*LS:

AFTER REPAIR	Carry out a road test, then check with the **diagnostic tool**.

GETtheMANUALS.org

AC088	GEAR LEVER LOCKING ELECTROMAGNET

NOTES	**Special notes:** Engine speed zero, vehicle speed zero and gear lever in position P

Switch on the ignition and run command **AC088**.

In the event of a fault, look for any damage to the wiring and check the condition and connection of the connectors for components **119** and **129.**
If the connection or connections are faulty and there is a repair procedure (see **Technical Note 6015A, Electrical wiring repair, Wiring: Precautions for repair**), repair the wiring, otherwise replace it.

Check **the continuity and insulation** of the following connection:
- Connection code **5DU** between components **119** and **129**.

Check for **+ after ignition feed** on connection **BP42** of component **119**.
If the connection or connections are faulty and there is a repair procedure (see **Technical Note 6015A, Electrical wiring repair, Wiring: Precautions for repair**), repair the wiring, otherwise replace it.

If the fault is still present, contact Techline.

AFTER REPAIR	Carry out a road test, then check with the **diagnostic tool**.

GETtheMANUALS.org

NO DIALOGUE WITH THE TOOL

- No dialogue with the computer — ALP 1

ENGINE STARTING PROBLEMS

- The starter is not actuated when the gear lever is in position P and/or N — ALP 2
- The starter drives the engine, with the gear lever in a position other than P or N — ALP 3
- The vehicle moves forwards or backwards with the gear lever in position N — ALP 4

GEAR CHANGE PROBLEM

- Erratic gear change in D — ALP 5
- Erratic gear change in manual mode — ALP 6

GETtheMANUALS.org

ALP 1	No dialogue with the computer

NOTES	**Special notes:** Only consult this customer complaint after a multiplex network check using the **diagnostic tool**.

Check that the vehicle **+ after ignition feed** is activated. Check the presence and condition of the UPC automatic transmission connection fuses.
Check that the tool is not the cause of the fault, by attempting dialogue with a different system (UCH, Injection, etc.) on the same vehicle or another vehicle.
Carry out another multiplex network test on the vehicle using the **diagnostic tool**:
Is the automatic transmission computer recognised?

NO

Check that the computer connector is properly connected and check the condition of its connections.
Check for the automatic transmission supply fuse on the passenger compartment connection unit, and its condition.
Check the battery voltage:
9.5 V < battery voltage < **15.5 V**
Carry out the necessary operations to obtain a correct voltage: Carry out a full check on the battery and the charging circuit (see **Technical Note 6014A, Charging circuit check**).

YES

Establish dialogue with the automatic transmission computer.

Communication successful at first attempt?

NO

Is the identification screen displayed after 3 attempts?

YES

End of fault finding

AFTER REPAIR	Deal with any faults detected by the diagnostic tool. Clear the computer memory. Carry out a road test, then check with the **diagnostic tool**.

GETtheMANUALS.org

ALP 1 CONTINUED	

Check for **+ 12 V** on connection **BP42** of component **119**.
Check for **+ after ignition feed** on connection **AP4** of component **119**.
Check for **earth** on connection **N** of component **119**.

Check the **insulation** and the **continuity** of the following connections:
- Connection code **3MS**,
- Connection code **3MT**,

between components **119** and **120.**
If the connection or connections are faulty and there is a repair procedure (see **Technical Note 6015A, Electrical wiring repair, Wiring: Precautions for repair**), repair the wiring, otherwise replace it.

Run a multiplex network test (see **88B, Multiplex**).

If the computer still does not respond, contact the Techline.

AFTER REPAIR	Deal with any faults detected by the diagnostic tool. Clear the computer memory. Carry out a road test, then check with the **diagnostic tool**.

GETtheMANUALS.org

ALP 2	**The starter is not actuated when the gear lever is in position P and/or N**

NOTES	**Special notes:** There must be no present or stored electrical faults. Only consult this customer complaint after a complete check using the **diagnostic tool** and a conformity check.

Apply this ALP after a complete check on the ignition circuit.

Check the battery voltage:
9.5 V < battery voltage < **15.5 V**
Carry out the necessary operations to obtain a correct voltage: Carry out a full check on the battery and the charging circuit (see **Technical Note 6014A, Charging circuit check**).

Carry out fault finding on the injection computer (see **13B, Diesel injection**) and deal with the various faults displayed on the **diagnostic tool**, if necessary.

Connect the **diagnostic tool** to the vehicle and establish dialogue with the automatic transmission computer. Check statuses **ET012 "Gear lever position"** and **ET013 "Gear engaged"**; check the consistency between the tool display and the locked positions of the gear lever (ignition on and engine stopped): **"P" or "N".**

Are they consistent?

YES

Contact the Techline.

NO

Check that the selection cable is operating and is correctly positioned and fitted at the lever position sensor located on the automatic transmission.

Run the starter motor:
Does the starter motor engage?

NO

Contact the Techline.

YES

End of fault finding.

AFTER REPAIR	Deal with any faults detected by the diagnostic tool. Clear the computer memory. Carry out a road test, then check with the **diagnostic tool**.

GETtheMANUALS.org

ALP 3	**The starter drives the engine, with the gear lever in a position other than P or N**

NOTES	**Special notes:** There must be no present or stored faults. Only consult this customer complaint after a complete check using the **diagnostic tool** and a conformity check.

Connect the **diagnostic tool** to the vehicle and establish dialogue with the automatic transmission computer. Check statuses **ET012 Gear lever position** and **ET013 Gear engaged**; check the consistency between the display on the tool and the locked positions of the gear lever at the bridge piece (ignition on and engine stopped): "P" or "N".

Are they consistent?

YES ↓

End of fault finding procedure.
Incorrect interpretation of customer complaint.

NO ↓

Check that the selection cable is correctly adjusted and the gear lever correctly positioned at the lever position sensor located on the automatic transmission (see **MR 405 mechanical, 37A, Automatic gear controls, Adjustment**).

↓

If the fault is still present, contact Techline.

AFTER REPAIR	Deal with any faults detected by the diagnostic tool. Clear the computer memory. Carry out a road test, then check with the **diagnostic tool**.

GETtheMANUALS.org

ALP 4	The vehicle moves forwards or backwards with the gear lever in position N

NOTES	**Special notes:** There must be no present or stored electrical faults. Only consult this customer complaint after a complete check using the **diagnostic tool** and a conformity check.

Connect the **diagnostic tool** to the vehicle and establish dialogue with the automatic transmission computer. Check statuses **ET012 Gear lever position** and **ET013 Gear engaged**; check the consistency between the display on the tool and the locked positions of the gear lever at the gear lever bridge piece (ignition on and engine stopped).

Are they consistent?

YES

Check the condition and level of the transmission oil (colour).

Does the condition of the oil suggest there is an internal fault with the automatic transmission?

NO

End of fault finding. Review the cause against the customer complaint.

YES

Contact the Techline to confirm replacement of the automatic transmission.

NO

Check that the selection cable is correctly adjusted and the gear lever correctly positioned at the lever position sensor located on the automatic transmission (see **MR 405 mechanical, 37A, Automatic gear controls, Adjustment**).

Carry out a test on the gear selector.

Are they consistent?

NO

Contact the Techline to confirm replacement of the automatic transmission.

YES

End of fault finding

AFTER REPAIR	Deal with any faults detected by the diagnostic tool. Clear the computer memory. Carry out a road test, then check with the **diagnostic tool**.

GETtheMANUALS.org

ALP 5	Erratic gear changes in D

NOTES	**Special notes:** There must be no present or stored electrical faults. Only consult this customer complaint after a complete check using the **diagnostic tool** and a conformity check.

Connect the **diagnostic tool** to the vehicle and establish dialogue with the automatic transmission computer. Check statuses **ET012 "Gear lever position"** and **ET013 "Gear engaged"**; check the consistency between the display of these two statuses on the tool, vehicle in motion, position "D".

Are they consistent?

YES

Check the condition and level of the transmission oil (colour).

Does the condition of the oil suggest there is an internal fault with the automatic transmission?

NO

End of fault finding. Review the cause against the customer complaint.

YES

Carry out an injection system check.

NO

Check that the selection cable is correctly adjusted and the gear lever correctly positioned at the lever position sensor located on the automatic transmission (see **MR 405 mechanical, 37A, Automatic gear controls, Adjustment**).

Check the consistency of parameter **PR022 "Accelerator pedal position".**

If inconsistent.

Carry out an injection system check.

If consistent.

Contact the Techline.

AFTER REPAIR	Deal with any faults detected by the diagnostic tool. Clear the computer memory. Carry out a road test, then check with the **diagnostic tool**.

GETtheMANUALS.org

ALP 6	Erratic gear change in manual mode

NOTES	**Special notes:** Only consult this customer complaint after a multiplex network check using the **diagnostic tool**.

Check the gear lever clearance in manual position.
Check that the M+ and M - switches are working properly with status ET012 "Gear lever position".
Check the condition and level of the transmission oil (colour).

AFTER REPAIR	Deal with any faults detected by the diagnostic tool. Clear the computer memory. Carry out a road test, then check with the **diagnostic tool**.

GETtheMANUALS.org

VEL SATIS

3 Chassis

37B ELECTRONIC PARKING BRAKE

FPA
Vdiag No.: 0C, 04, 08, 0D

Fault finding – Introduction	37B - 2
Fault finding – System operation	37B - 8
Fault finding – Allocation of computer tracks	37B - 12
Fault finding – Replacement of components	37B - 13
Fault finding – Configurations and programming	37B - 16
Fault finding – Fault summary table	37B - 17
Fault finding – Interpretation of faults	37B - 18
Fault finding – Conformity check	37B - 71
Fault finding – Status summary table	37B - 93
Fault finding – Parameter summary table	37B - 97
Fault finding – Interpretation of parameters	37B - 98
Fault finding – Interpretation of commands	37B - 99
Fault finding – Customer complaints	37B - 104
Fault finding – Fault finding chart	37B - 105

V8 **Edition Anglaise**

"The repair procedures given by the manufacturer in this document are based on the technical specifications current when it was prepared.

The procedures may be modified as a result of changes introduced by the manufacturer in the production of the various component units and accessories from which his vehicles are constructed."

All rights reserved by Renault s.a.s.

Copying or translating, in part or in full, of this document or use of the service part reference numbering system is forbidden without the prior written authority of Renault s.a.s.

© Renault s.a.s. 2009

GETtheMANUALS.org

1. SCOPE OF THIS DOCUMENT

This document presents the fault finding procedure applicable to all computers with the following specifications:

Vehicle(s): **Vel Satis phase 1**
Vel Satis phase 2
Laguna II Phase 2
Scénic II Phase 1 and
Scénic II Phase 2
Espace IV phase 1
Espace IV phase 2

Function concerned: **Electronic parking brake**

Name of computer: **FPA**

Vdiag No.: **0C, 04, 08, 0D**

2. PREREQUISITES FOR FAULT FINDING

Documentation type

Fault finding procedures (this document):
– Assisted fault finding (integrated into the diagnostic tool), Dialogys.
Wiring Diagrams:
– Visu-Schéma (CD-ROM), paper.

Type of diagnostic tools

– CLIP

Special tooling required

Special tooling required	
	Multimeter
Elé. 1681	**Universal bornier**

3. REMINDERS

Procedure

To save power, the UCH on the Laguna II Phase 2, Espace IV phase 1 and 2 and Vel Satis phase 1 and 2 interrupts the **+ after ignition feed** supply after **3 minutes**.

To run fault finding on a computer, it is possible to force the **+ after ignition feed** for **1 hour** by applying the following procedure:

– Press the card unlocking button,
– Insert the card into the reader,
– press the start button (interrupting the **timed + after ignition feed** mode),
– press the start button for more than **5 seconds**, until the immobiliser warning light flashes rapidly (**4 Hz**).

This **forced + after ignition feed** mode remains active for **1 hour**.
Pressing the start button or removing the card from the card reader interrupts the forced **+ after ignition feed**, but does not interrupt the time period for the forced **+ after ignition feed**. Until one hour has elapsed, activating the **+ after ignition feed** will restart forced **+ after ignition feed** for the remaining time.

GETtheMANUALS.org

Only affects the Scénic II phase 1 and the Scénic II phase 2:

To run fault finding on the vehicle's computers, switch on the ignition in fault finding mode (forced + after ignition feed).
Proceed as follows:
– Renault card in the card reader (keyless vehicle scenario 1, entry-level, without hands-free and scenario 2, top of the range, hands-free),
– press and hold start button (longer than **5 seconds**) with start-up conditions not fulfilled,
– connect the diagnostic tool and perform the required operations.

To cut off **+ after ignition feed**, proceed as follows:
– disconnect the diagnostic tool,
– press the Start button twice briefly (less than **3 seconds**),
– ensure that the + after ignition feed has been cut off by checking that the computer indicator lights on the instrument panel have gone out.

Fault context.

Only affects Vdiag 08, 0C and 0D.	
Explanation of the fault context counters. The are three different counters:	
PR022: Dating counter **PR018:** Presence counter **PR019:** Frequency counter	
Dating counter:	The counter starts when the fault appears. Each time the computer switches on and the fault is stored or present, the counter increases **by 1 up to 255**.
Presence counter:	As soon as the fault is present, the counter goes to **15**. If the fault becomes stored, each time the computer switches on, the number decreases **by 1 (from 15 to 0)** and goes back to 15 again if the fault reappears.
Frequency counter:	Number of times the present fault appears; it sets to 0 when the fault appears. It increases each time the fault moves from stored to present. The maximum value of this counter is 15.

GETtheMANUALS.org

Faults

Faults are declared present or stored (depending on whether they appeared in a certain context and have disappeared since, or whether they remain present but are not diagnosed within the current context).

The **present** or **stored** status of faults should be taken into consideration when the diagnostic tool is used following the **+ after ignition** supply being switched on (without acting on the system components).

For a **present fault**, apply the procedure described in the **Interpretation of faults** section.

For a **stored fault**, note the faults displayed and apply the instructions in the **Notes** section.

If the fault is **confirmed** when the instructions in the Notes section are applied, the fault is present. Deal with the fault.

If the fault is **not confirmed**, check:
- the electrical lines which correspond to the fault,
- the connectors for these lines (for oxidation, bent pins, etc.),
- the resistance of the component detected as defective,
- the condition of the wires (melted or split insulation, wear).

Conformity check

The aim of the conformity check is to check data that does not produce a fault on the diagnostic tool because the data is inconsistent. Therefore, this stage is used to:
- carry out fault finding on faults that do not have a fault display, and which may correspond to a customer complaint.
- check that the system is operating correctly and that there is no risk of a fault recurring after repairs.

This section gives the fault finding procedures for statuses and parameters and the conditions for checking them. If a status is not behaving normally or a parameter is outside the permitted tolerance values, consult the corresponding fault finding page.

Customer complaints - Fault finding chart

If the test with the diagnostic tool is OK but the customer complaint is still present, the fault should be dealt with by **Customer complaints**.

A summary of the overall procedure to follow is provided on the following page in the form of a flow chart.

GETtheMANUALS.org

4. FAULT FINDING PROCEDURE

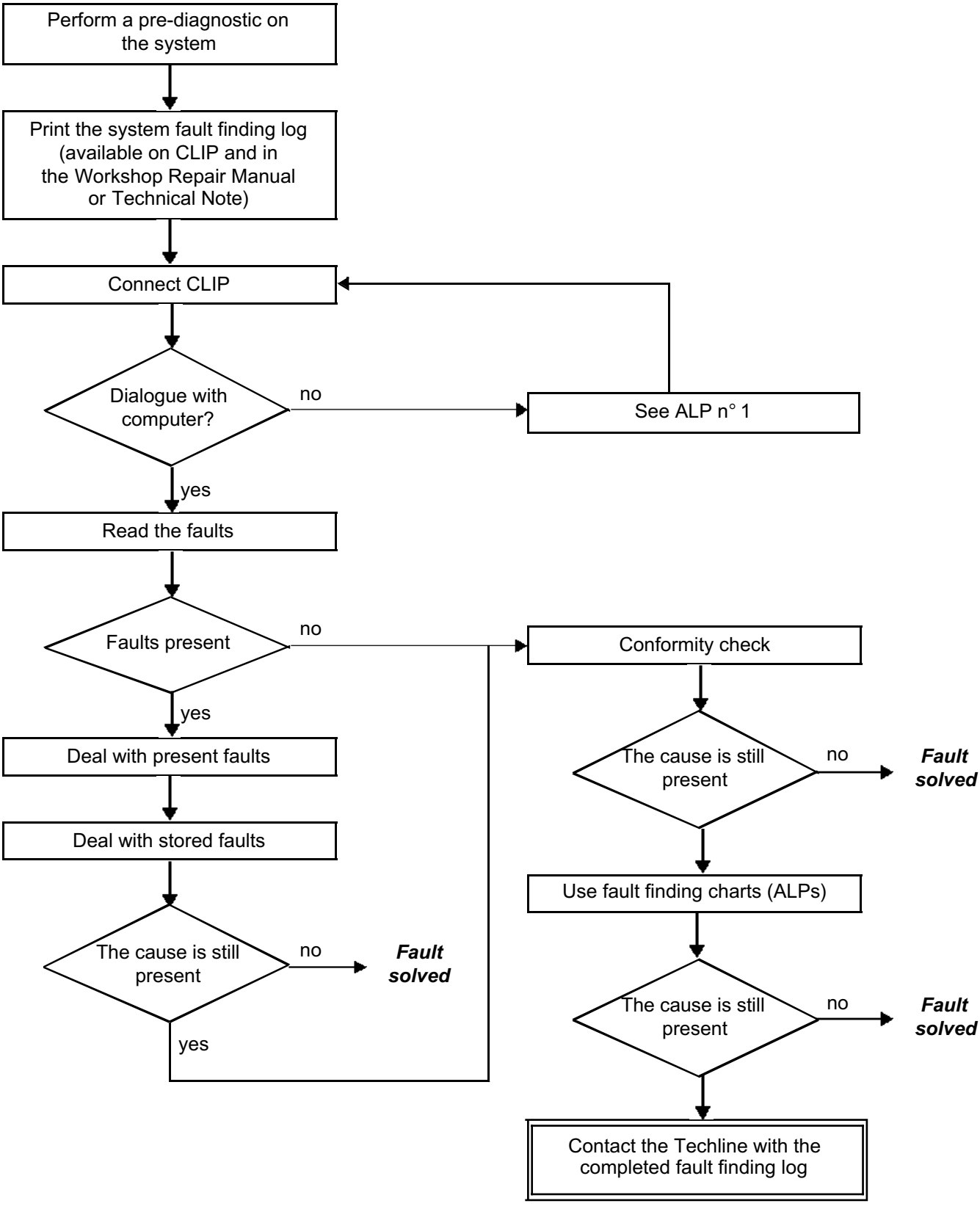

GETtheMANUALS.org

4. FAULT FINDING PROCEDURE (CONTINUED)

Wiring check

Fault finding problems
Disconnecting the connectors and/or handling the wiring harness may temporarily remove the cause of a fault and create other faults.
Electrical measurements of voltage, resistance and insulation are generally correct, especially if the fault is not present when the analysis is made (stored fault).

Visual inspection
Look for damage under the bonnet and in the passenger compartment.
Carefully check the fuses, insulators and wiring harness routing.
Look for signs of oxidation.

Physical inspection
While manipulating the wiring harness, use the diagnostic tool to note any change in fault status from stored to present.
Make sure that the connectors are properly locked.
Apply light pressure to the connectors.
Twist the wiring harness.
If there is a change in status, try to locate the source of the fault.

Inspection of each component
Disconnect the connectors and check the appearance of the clips and tabs, as well as the crimping (no crimping on the insulating section).
Make sure that the clips and tabs are properly locked in the sockets.
Check that no clips or tabs have been dislodged during connection.
Check the clip contact pressure using an appropriate model of tab.

Continuity and insulation check
Check the continuity of entire lines, then section by section.
Look for a short circuit to earth, to **+ 12 V** or to another wire.
If a fault is detected, repair or replace the wiring harness.

GETtheMANUALS.org

5. FAULT FINDING LOG

IMPORTANT

IMPORTANT
Any fault on a complex system requires thorough fault finding with the appropriate tools.
The FAULT FINDING LOG, which should be completed during the fault finding procedure, ensures a record is kept of the procedure carried out. It is an essential document when consulting the manufacturer.

IT IS THEREFORE ESSENTIAL THAT THE FAULT FINDING LOG IS FILLED OUT EVERY TIME IT IS REQUESTED BY TECHLINE OR THE WARRANTY RETURNS DEPARTMENT.

You will always be asked for this log:

- when requesting technical assistance from Techline,
- for approval requests when replacing parts for which approval is mandatory,
- to be attached to monitored parts for which reimbursement is requested. The log is needed for warranty reimbursement, and enables better analysis of the parts removed.

6. SAFETY INSTRUCTIONS

Safety rules must be observed during any work on a component to prevent any damage or injury:

- check the battery voltage to avoid incorrect operation of computer functions,
- use the proper tools.

GETtheMANUALS.org

PRESENTATION OF THE PARKING BRAKE:

The electronic parking brake provides the following functions:
- keeps the vehicle stationary when stopped (parking brake).
- 'dynamic' emergency brake (if the main brakes fail).
- automatic braking force adjustment according to the slope (adapted application),
- electronically-assisted parking brake application when the engine is stopped (depending on configuration),
- easy start with electronically-assisted parking brake release (depending on configuration),
- manual application and release by pulling on the lever.

SYSTEM COMPONENTS AND OPERATION:

The system consists of the following components:

- **Control lever** with brake on indicator light.
  - For applying and releasing the parking brake.

- **Control unit** (computer) housing an electric motor, the brake cable hooks, angle sensor and force sensor.
  - The **angle sensor** controls locking according to the angle of the slope.
  - The **force sensor** checks and corrects the force applied to the brakes.

- **Clutch pedal position sensor to help with pulling away**.
  - Informs the computer of the vehicle's clutch position (the position of the pedal enables the torque necessary for vehicle movement to be obtained).

- Two **mechanical cables**
  - Convey the mechanical force to the rear brakes.

- **Emergency control** cable (in the central storage compartment on the **LAGUNA, VEL SATIS** and **ESPACE** and in the boot on the **SCENIC**).
  - Enables the rear brakes to be released in the event of the battery or parking brake failing.

- **Warning lights** and symbol on the instrument panel.
  - Indicate application, releasing and any faults on the parking brake.

Note:
The parking brake cable play compensation is performed automatically by the control unit.

GETtheMANUALS.org

MANUAL OPERATION:

– The parking brake is engaged by pulling on the control lever (normal braking immobilises the vehicle).

– Over-application can be obtained by pulling and holding the lever for **5 seconds** (maximum application for steep hills or when the vehicle has reached its maximum permissible all-up weight).

– When the parking brake is applied, the computer super-applies if the force applied to the rear brake callipers is insufficient (pads cooling) or if the computer detects slight vehicle movement. This detection is limited to **24 hours**.

– The parking brake is released when the control lever is applied fully and the release switch is pressed.

Note:
When the parking brake is applied, the red light on the instrument panel (brake pads) and indicator light on the lever are lit.
Below **6 mph** (10 km/h) pulling the lever applies the rear brakes. Above **6 mph** (10 km/h) pulling the lever provides dynamic emergency braking without locking the rear wheels (statutory deceleration of **1.5 m/s^2**).
The electronic parking brake can only be released when the steering column is unlocked (**forced + after ignition feed**, see **Introduction**).

ASSISTED OPERATION:

The electronic parking brake enables assisted application and release of the brake:

- Applying the brake: When the engine is switched off, the parking brake is applied when the driver presses the start button
- Releasing: The brake releases when the drive wheels reach the torque required to move the vehicle (**Note:** with automatic transmission, the driver's door must be closed).

Restrictions on assisted brake release in automatic transmissions:
Assisted release is **not allowed** in the following cases:

– Opening the driver's door **followed** by engaging a gear (gear lever in position **D**).

Note: In this case, the instrument panel displays the message Lever in **P** or **N** and the buzzer on the instrument panel sounds.

– Engaging a gear (gear lever in position **D**) **followed** by opening the driver's door.

Note: In this case, **release is authorised for 5 s** after the driver's door has been opened (e.g. for a manoeuvre). After **5 seconds** release is prevented.

Note:
Assisted braking and release only occurs if the computer has been configured.
For details on how these configurations function, see **Configuration and programming**.

GETtheMANUALS.org

GENERAL OPERATING MODE FOR THE COMPUTER:

The electronic parking brake computer operates in two modes: **STANDBY** mode and **SWITCH ON** mode.

- **SWITCH ON** mode:

Available functions:

- Manual application and release, assisted application and release and emergency braking (steering column unlocked).
- Full system fault finding (all faults can be identified).

Switch on conditions (3 possibilities):

- The UCH sends a **switch on** request to the parking brake computer via the multiplex network when the vehicle is opened or the card is inserted in the reader.
- Braking request via the parking brake control lever.
- Battery voltage more than **13.2 V**, if the vehicle has been parked for less than **24 hours**.

- **STANDBY** mode:

Available functions:

- Monitoring of the braking force and slope angle for **24 hours** (to ensure parking brake application).
- Only application is authorised (using the lever).
- Restricted system fault finding (the computer can no longer identify all faults).
- Release not authorised.

Conditions for setting to standby:

- The UCH sends a "set to standby" request to the parking brake computer via the multiplex network after the ignition is switched off and the vehicle is locked (after a few seconds). The parking brake computer's STANDBY mode will be confirmed by the lever warning light going out (special note: the battery voltage must be less than **13.2 V**).

WARNING
Before using the emergency control, it is important to put the vehicle into gear and wedge one wheel if necessary (on a slope).

CABLE RESETTING:

The parking brake cable is locked after the control lever is released or after driving at over **1 mph** (2 km/h) (switched on mode).
When the electronic parking brake system locks, it makes a sound that lasts for a few seconds and ends with clicking (play compensation is automatic).

GETtheMANUALS.org

WARNING LIGHT MANAGEMENT

Indications of a level 1 fault:
- **Check Parking Brake** message on the instrument panel display.
- **orange warning light** (**P** in a triangle) on the instrument panel comes on.
- **SERVICE** warning light comes on.

Indications of a level 2 fault:
- **Parking brake defective** message on the instrument panel display.
- **1-second** audible warning (from the instrument panel),
- **orange warning light** (**P** in a triangle) on the instrument panel comes on.
- **SERVICE** warning light comes on,
- **Red indicator light** (brake pad light) on the instrument panel comes on.
- parking brake control lever indicator light flashes.

Note:
When the lever warning light stops flashing, the instrument panel message disappears. If the system has a level 2 fault, whenever the lever is used, the indicator light on the lever starts flashing again and the fault message reappears.

Warning occurs:
- when the door is opened and a gear is engaged on an automatic transmission,
- when the vehicle is moving, despite the parking brake being applied,
- when the door is opened, with the engine running and the parking brake released,
- when the door is opened, with the engine stopped and the parking brake released,

GETtheMANUALS.org

ALLOCATION OF COMPUTER TRACKS FOR THE ELECTRONIC PARKING BRAKE AND THE CONTROL LEVER

Track	Description
A1	Not used
A2	Multiplex line L
A3	Multiplex line H
A4	Diagnostic line K
B1	Not used
B2	Not used
B3	Not used
B4	Not used
C1	Not used
C2	Dynamic brake switch signal (1st switch)
C3	Dynamic brake switch signal (2nd switch)
C4	Lever warning light lit
D1	Not used
D2	Dynamic brake switch supply (1st switch)
D3	Static brake switch supply (2nd switch)
D4	Not used
E1	Not used
E2	Clutch pedal sensor earth
E3	Clutch pedal sensor signal
E4	Clutch pedal sensor supply
F1	Not used
F2	Not used
F3	Not used
F4	Not used
G1	Not used
G2	Computer earth (SCENIC II Ph 1 and Ph 2 only)
G3	Not used
G4	+ Battery feed (SCENIC II Ph 1 and Ph 2 only)
H1	Not used
H2	Computer earth
H3	+ 12 V battery

Control lever tracks	
6	→ + 12 V battery
12	→ + 12 V side lights
2	→ Earth
7	← C2
10	← C3
5	← C4
9	← D2
4	← D3

Clutch pedal sensor tracks	
3	
2	← F1
1	← F2

Note:
The clutch pedal sensor is only fitted to vehicles with a manual gearbox.

GETtheMANUALS.org

A/ PROCEDURE FOR REPLACING AN ELECTRONIC PARKING BRAKE COMPUTER

Note:
An electronic parking brake computer should be replaced **only when requested by the Techline** (fill out the fault finding log).

- For the description of the mechanical operations for replacing the control unit (computer) and brake cables (see **MR405 (Espace IV) or MR395 (Laguna II) or MR370 (Scénic), Mechanical, 37B, Electronic parking brake, Control unit: Removal - Refitting and 37A, Mechanical component controls, Parking brake cables: Removal - Refitting or MR353 (Vel Satis), Mechanical, 37B, Automatic parking brake, Control unit and brake cables**).
- The parking brake cables must always be replaced when the computer is replaced.
- In the same way, the computer must be replaced when the parking brake cables are changed.
- Conversely, the lever and the parking brake are independent of one another.
- Lever replacement must be carried out with **+ after ignition feed** switched off and the parking brake released, otherwise faults may occur.
- The clutch sensor must be replaced with **+ after ignition feed** switched on to avoid a fault being provoked.

BEFORE REPLACING THE PARKING BRAKE COMPUTER:

If the vehicle has a **manual gearbox**, recover the **clutch data** from the memory of the old computer so that it can be entered into the new computer (see section **C**).

Note:
With an automatic transmission, no data recovery is required (the computer can be replaced without applying sections **C and D**).

Operations to perform before replacement:

– Switch on the ignition, connect the diagnostic tool and establish dialogue with the computer (parking brake field).
– before replacing the computer, check that it is actually causing the fault by reading the faults and apply the fault finding procedure concerned.

Important:
Do not clear the faults from the computer before replacing it.

Steps to follow after replacement:

– with the ignition switched off, replace the electronic parking brake computer (with the approval of Techline).
– switch on the ignition, connect the diagnostic tool and establish dialogue with the computer (parking brake field),
– apply the procedure described in section **B: NEW COMPUTER CALIBRATION AND INITIALISATION**,
– release the parking brake lever to reset the cables.
– check parking brake operation by testing the braking, maximum braking, and release,
– read the faults to clear any stored faults and check that replacing the computer has enabled the fault on the vehicle to be rectified (no faults present).
– read the configuration (repair mode menu) to check that the parking brake computer configuration has been correctly configured.
– depending on the configuration chosen, check the assisted braking and release.

IMPORTANT: It is strictly forbidden to drive a vehicle with an electronic parking brake computer unless it is in customer mode.

GETtheMANUALS.org

B/ COMMISSIONING A NEW COMPUTER

1/ COMPUTER CONFIGURATION

– Carry out configuration in accordance with the customer's request (see **Configurations and programming**).

2/ VEHICLE IDENTIFICATION NUMBER ENTRY

– run command **VP004 Write VIN**.
– enter the vehicle identification number using the **diagnostic tool** keypad,
– confirm.

Note:
If the vehicle identification number is not entered and command **CF007 Vehicle configuration** is not run, step 3 of initialising the computer will not work.

3/ COMPUTER CALIBRATION AND COMMISSIONING

WARNING
To initialise the computer, the vehicle must be on a horizontal surface with the brake cables correctly fitted (connected to the rear brake callipers) and nobody must be working on the vehicle.

– In **+ after ignition feed**, run command **VP011 Computer calibration and initialisation** and carry out the following 4 steps.

STEP 1 VEHICLE MASS CALIBRATION
Screen 1:
With the dropdown menu, enter the following information:
– vehicle type,
– engine type,
– gearbox type,
– type of driving style,
– equipment level (for Vdiag 04),
– confirm the operation by pressing **Next**.

Screen 2:
– reread the highlighted information.
– If the highlighted information does not match the vehicle, return to the selection screen by pressing **Back**,
– if the highlighted information is correct, continue with step 2 by pressing **Next**.

STAGE 2 INITIALISING A NEW PARKING BRAKE
– Initialise the brake by pressing **YES** (you should hear a noise as the brake is applied and then released).
– Proceed to step 3 by pressing **Next**.

STEP 3 SLOPE INITIALISATION
– Calibrate the slope sensor by pressing **Confirm**. Proceed to step 4 by pressing **Next**.

STEP 4 INITIALISING ASSISTED BRAKING
– Carry out initialisation by pressing **Confirm**.
– Return to the selection list screen by pressing **Finish**.

GETtheMANUALS.org

C/ CLUTCH DATA BACKUP (for vehicles with a manual gearbox)

Purpose of the procedure:

The data saved relates to the clutch engagement point. This is important when the clutch wears, because this data enables the parking brake to release electronically when the clutch enables the vehicle to move off.

If this data cannot be retrieved from the old computer (impossible to establish dialogue with the diagnostic tool) or a new clutch has been fitted, the new computer has to be programmed with the clutch engagement point: drive the vehicle, downshifting at least 30 times (from 5th to 4th gear) before returning the vehicle to the customer.

If the clutch data is not recorded in the new computer, the operation of the assisted brake on steep slopes will be impaired when first used.

Perform the following operations:

IMPORTANT:
Do not apply this procedure in the event of a clutch fault.

- establish dialogue with the computer,
- select the repair mode menu on the diagnostic tool.
- open the programming menu,
- run function **SC005** Backup clutch pedal programming (the data is written to a file that is automatically selected when the new computer is programmed).
- replace the electronic parking brake computer (see **MR405 (Espace IV) or MR395 (Laguna II) or MR370 (Scénic), Mechanical, 37B, Electronic parking brake, Control unit: Removal - Refitting or MR353 (Vel Satis), Mechanical, 37B, Automatic parking brake, Control unit**),
- follow the procedures described in sections **A** and **B**.

D/ CLUTCH DATA ENTRY (for vehicles with automatic transmission)

The initialisation must be carried out (sections **A** and **B**).

Perform the following operations:

- establish dialogue with the computer,
- select the repair mode menu on the diagnostic tool.
- open the programming menu,
- run function: **SC006 Enter clutch pedal programming**.
- check that the electronic parking brake is operating correctly, including the assisted release function.

Note:
- For vehicles fitted with an **automatic gearbox**, command **SC005 Save clutch pedal programming** is **unavailable**.
- Command **SC006 Enter clutch pedal programming**, is also unavailable if command **SC005** has not already been activated.

GETtheMANUALS.org

CONFIGURATIONS:

Two functions can be turned off by configuration: assisted application and release.

Special note:
Assisted application and release are configured by default when a new computer is initialised. This configuration is accessible in the log book.

To carry out configuration, select the diagnostic tool's **Repair mode** menu.

CF007 Vehicle configuration

This configuration turns electronic parking brake application on or off when the engine is stopped.
In cold countries or regions, assisted braking should preferably be inhibited to avoid brake cables becoming frozen in the applied position.

- Select the type of configuration:
  - NORMAL (**with** assisted braking when the engine is stopped).
  - COLD CLIMATE (**without** assisted braking when the engine is stopped).
- Confirm the operation.
- Make sure the configuration has been properly entered by reading configuration **LC009 Vehicle configuration**.
- Make sure the assisted braking function works.

PROGRAMMING:

- Refer to the configuration check.

Note:
When a new computer is initialised, the angle sensor is calibrated by running command **VP011 Computer calibration and initialising**.

GETtheMANUALS.org

Tool fault	Associated DTC	Diagnostic tool title
DF003	**50C3**	Computer
DF004	**50CA**	Computer
DF006	**50C5**	Computer configuration
DF015	**5166**	Clutch position sensor circuit
DF016	**50 CB**	Warning light circuit
DF025	**5168**	Vehicle movement with maximum application
DF028	**517E**	Computer
DF029	**517B**	Computer
DF035	**5170**	Undervoltage
DF036	**5180**	No injection multiplex signal
DF037	**5181**	No ABS system multiplex signal
DF038	**5188**	No automatic transmission multiplex signal
DF039	**5183**	No UCH multiplex signal
DF041	**5160**	Angle sensor (internal)
DF042	**5161**	Force sensor (internal)
DF043	**5162**	Parking brake motor
DF044	**516C**	Brake switch
DF045	**5172**	Redundant brake switch
DF046	**516F**	Brake motor/cables connection
DF047	**5171**	Manual control
DF048	**5173**	Release switch
DF049	**5175**	Braking
DF050	**5178**	Mechanical jamming (internal)
DF051	**5176**	System fault after computer replacement
DF052	**516D**	Multiplex network
DF054	**50C1**	Battery overvoltage
DF055	**50C0**	Battery voltage too low
DF056	**5163**	Brake cables incorrectly fitted
DF057	**517A**	Computer internal temperature sensor
DF058	**5177**	Parking brake motor current (internal)
DF059	**5194**	No Protection and Switching Unit multiplex signal
DF073	**5174**	Computer

GETtheMANUALS.org

DF003 PRESENT OR STORED	COMPUTER 1. DEF: Internal electronic fault 2. DEF: Internal electronic fault 3. DEF: Loss of computer supply voltage

NOTES	**Priorities when dealing with a number of faults:** This fault must be dealt with first.
	Special notes: Before replacing the electronic parking brake computer, **save the data from the old computer** (for vehicles fitted with a manual gearbox). For this operation, see **Replacement of components**.

1. DEF ***2. DEF***	***NOTES***	None.

If the fault is present or stored, contact the **Techline**.

3. DEF	***NOTES***	**Special notes:** The fault does not usually come from the electronic parking brake computer. This fault indicates that the computer has detected several losses of feed (micro-breaks). **Note:** This fault may be caused by several battery disconnections or a vehicle power supply fault. **Only for Vdiag 08, 0C and 0D:** **If there is a stored fault, refer to the statuses and parameters when it appears.** Explanation of counters: see **Introduction**. If the fault is stored and **PR018 = 0** and **PR022 > 25**, then clear the fault: do not take this fault into account.
		Conditions for applying the fault finding procedure to a stored fault: Apply this fault finding procedure if the fault reappears as present or stored after a fault has been cleared and forced + after ignition feed has been switched off and on again (see **Introduction**).

AFTER REPAIR	If the computer has been replaced **(at the request of the Techline)**, initialise the electronic parking brake computer (see **Replacement of components**). Issue several braking and release commands to confirm the repair. Deal with any other faults.

GETtheMANUALS.org

DF003 **CONTINUED**	

Disconnect the electronic parking brake computer connector (under the body near the rear axle) to check the **conformity of the power supply** (this must equal the voltage measured at the battery terminals **± 0.5 V**).
Check **the insulation, continuity and the absence of interference resistance** on the following connections:

Electronic parking brake computer connector

track H4
(except Laguna II, Vel Satis and Espace IV) → **+ 12 V**
track G4

track H2
(except Laguna II, Vel Satis and Espace IV) → **earth**
track G2

Note:
If the electrical supply is correct, check that the supply has not been cut off by moving the electrical harness (near to the intermediate connector under the front left-hand seat at the computer connector).
Repair if necessary (see the vehicle wiring diagram).

If the fault persists, contact the **Techline**.

AFTER REPAIR	If the computer has been replaced **(at the request of the Techline)**, initialise the electronic parking brake computer (see **Replacement of components**). Issue several braking and release commands to confirm the repair. Deal with any other faults.

GETtheMANUALS.org

DF004 PRESENT OR STORED	COMPUTER 1. DEF: Internal electronic fault

NOTES	**Priorities when dealing with a number of faults:** This fault must be dealt with first.
	Special notes: Before replacing an electronic parking brake computer, **save the data from the old computer** (for vehicles fitted with a manual gearbox). For this operation, see **Replacement of components**.

Contact the Techline without clearing the faults.

AFTER REPAIR	If the computer has been replaced **(at the request of the Techline)**, initialise the electronic parking brake computer (see **Replacement of components**). Issue several braking and release commands to confirm the repair. Deal with any other faults.

GETtheMANUALS.org

DF006 PRESENT	COMPUTER CONFIGURATION 1. DEF: Configuration absent or incorrect

NOTES	**Special notes:** Deal with this fault only after the computer has been replaced. If it appears when the electronic parking brake computer is not new, contact the Techline. This fault indicates that the parking brake control unit has not been calibrated or has been calibrated incorrectly. This fault causes the electronic parking brake to operate incorrectly, in particular for the assisted release function.

Display status **ET024 System operation** on the main screen of the diagnostic tool.
This status should be **CUSTOMER MODE**. If it is **FACTORY MODE**, initialise the computer by running command **VP011 Computer calibration and initialisation** (see **Replacement of components**).

Test that the parking brake is operating correctly by applying it, applying it completely (handle pulled right up for **5 seconds**) and releasing it.

Check the validity of parameter **PR003 "Inclination value"**.
Calibrate the sensor if necessary **(SC008 Slope initialisation**).

If necessary, reconfigure the application and release functions as requested by the customer with **CF007 Vehicle configuration** and see **Configurations and programming**.

If the above procedure does not resolve the fault (fault still present), recalibrate the computer (command **VP011 Computer calibration and initialisation** on the diagnostic tool).
During this stage, check that the vehicle criteria are correctly entered (screen 2 stage 1).

If the fault is still present, contact the **Techline** without clearing the faults.

AFTER REPAIR	If the computer has been replaced **(at the request of the Techline)**, initialise the electronic parking brake computer (see **Replacement of components**). Issue several braking and release commands to confirm the repair. Deal with any other faults.

GETtheMANUALS.org

DF015 PRESENT OR STORED	CLUTCH POSITION SENSOR CIRCUIT CC.0 : Short circuit to earth CC.1 : Short circuit to + 12 volts 1. DEF: Signal inconsistency between the sensor and the gearbox 2. DEF: Signal outside lower limit 3. DEF: Sensor supply fault

NOTES	**Priorities when dealing with a number of faults:** Deal with faults **DF035 Undervoltage, DF055 Battery undervoltage and DF054 Battery voltage too high** first, if they are present or stored.
	Special notes: The fault does not usually come from the electronic parking brake computer. The fault should only be displayed on a vehicle fitted with a manual gearbox. If it is displayed on an automatic transmission, check the configurations. The sensor should be replaced in **+ after ignition feed**, if not this fault may occur. If the fault appeared following replacement of the clutch position sensor, check the procedure and repeat it in **+ after ignition feed** if necessary, after clearing the fault. If the fault cannot be cleared, disconnect the clutch sensor under **+ after ignition feed**, then reconnect it. **Only for Vdiag 08, 0C and 0D:** **If there is a stored fault, refer to the statuses and parameters when it appears.** Explanation of counters: see **Introduction**. If the fault is stored and **PR018 = 0** and **PR022 > 25** clear the fault: do not take this fault into account.

CC.0; CC.1; 3.DEF	***NOTES***	**Conditions for applying the fault finding procedure to a stored fault:** The fault is declared present when the ignition is switched on (forced + after ignition feed, see **Introduction**).

Check **the connection and condition** of the clutch pedal position sensor connector. Repair if necessary.
With the clutch pedal position sensor connector disconnected, check **the insulation, continuity and absence of interference resistance** on the following connections:

AFTER REPAIR	If the computer has been replaced **(at the request of the Techline)**, initialise the electronic parking brake computer (see **Replacement of components**). Issue several braking and release commands to confirm the repair. Deal with any other faults.

GETtheMANUALS.org

DF015 CONTINUED	

Clutch pedal position sensor connector: **1057** — Electronic parking brake computer connector: **1217**

Track 1	→	**Track E4**
Track 2	→	**Track E3**
Track 3	→	**Track E2**

Repair if necessary.

Disconnect the clutch pedal position sensor connector to check, with the ignition switched on and the electronic parking brake computer connector connected, **the presence of a 5 volt supply**, by measuring between **tracks 1 and 3** of the sensor (**+ 5 V** on **track 1** and earth on **track 3**).
If the 5 V supply is not present and the connections previously checked are correct, contact the Techline.

With the clutch pedal position sensor connector disconnected, measure the sensor resistance between **tracks 1 and 3** of the sensor.
Replace the sensor if its resistance is not **5200 Ω ± 520 Ω**.

If the fault is still present, contact the **Techline**.

1. DEF; 2. DEF	*NOTES*	**Conditions for applying the fault finding procedure to a stored fault:** Engine at idle speed, and gear engaged for **5 seconds**.

Check the operation of statuses **ET016 Manual gearbox gear lever position** and **ET017 Reverse gear engaged** and the absence of any incorrect contacts.
If not correct, check the operation of the gearbox sensor.

Check that the clutch pedal position sensor is **fitted correctly**: the **"arm"** of the potentiometer should be inserted correctly into its mounting lug (neither above nor below).

Using the diagnostic tool, display parameter **PR006 Clutch pedal position** on the main data screen (see the conformity check values).

Check the conformity of the pedals.

If the fault persists, contact the **Techline**.

AFTER REPAIR	If the computer has been replaced **(at the request of the Techline)**, initialise the electronic parking brake computer (see **Replacement of components**). Issue several braking and release commands to confirm the repair. Deal with any other faults.

GETtheMANUALS.org

DF016 PRESENT OR STORED	WARNING LIGHT CIRCUIT CC.0: Short circuit to earth CC.1: Short circuit to + 12 V.

NOTES	**Priorities when dealing with a number of faults:** Deal with faults **DF035 Undervoltage, DF055 Battery undervoltage and DF054 Battery voltage too high** first, if they are present or stored.
	Conditions for applying the fault finding procedure to a stored fault: The fault is declared present after the forced + after ignition is switched on (see **Introduction**) and an application request using the control lever.
	Special notes: The fault does not usually come from the electronic parking brake computer. **Note:** After a release request, the fault becomes stored. Replacing the lever with the parking brake applied may cause this fault. If this fault appears after replacing the lever, release the parking brake and carry out the procedure again. **Only for Vdiag 08, 0C and 0D:** **If there is a stored fault, refer to the statuses and parameters when it appears.** Explanation of counters: see **Introduction** section. If the fault is stored and **PR018 = 0** and **PR022 > 25** clear the fault: do not take this fault into account. If the fault is stored and **PR019 < 3**, clear the fault: do not take this fault into account.

Check that the electronic parking brake control lever connector is in **good condition** and also check its clips (terminals).
Repair if necessary.

Check that there is a **12 V + before ignition** supply on **track 6** of the electronic parking brake control lever: see wiring diagram.
Repair if necessary.

Disconnect the electronic parking brake control lever connector in order to check **the insulation, continuity and absence of interference resistance** on the following connection:

Electronic parking brake control lever connector: **1216**		Electronic parking brake computer connector: **1217**
Track 5	→	**Track C4**

Repair if necessary.

If the fault is still present, replace the parking brake control lever (the indicator light cannot be separated).

If the fault persists, contact the **Techline**.

AFTER REPAIR	If the computer has been replaced **(at the request of the Techline)**, initialise the electronic parking brake computer (see **Replacement of components**). Issue several braking and release commands to confirm the repair. Deal with any other faults.

GETtheMANUALS.org

DF025 PRESENT OR STORED	VEHICLE MOVEMENT WITH MAXIMUM APPLICATION 1. DEF: Rear wheel movement with parking brake applied 2. DEF: Front wheel movement with parking brake applied

NOTES	**Priorities when dealing with a number of faults:** First deal with faults **DF046 Brake motor/cables connection, DF042 Force sensor, DF035 Undervoltage, DF041 Slope sensor, DF049 Brake application, DF054 Battery voltage too high and DF055 Battery undervoltage**, if they are present or stored. If none of these faults is present or stored, the parking brake computer is not normally the cause.
	Conditions for applying the fault finding procedure to a stored fault: Apply the fault finding procedure even if the fault is **stored**. **Note:** The fault does not remain present after it has been detected.

1. DEF	***NOTES***	**Special notes:** – This fault indicates that the electronic parking brake computer detected rear wheel movement although the parking brake was applied with maximum force. – It may be associated with **2.DEF**. If this fault is not associated with the faults mentioned above, check the conformity of the parking brake's mechanical force line: – Condition and conformity of rear brake pads. – Parking brake cables correctly fitted. – Good condition of the parking brake cables (no seizing or deterioration). – Conformity, condition and correct operation of the rear brake callipers. This fault is an operational warning. Check the context in which it appears. **It may appear during:** **– incorrect use of a roller test bench which drives the rear wheels (MOT test),** **– forced assisted release when starting, when the starting conditions have not been met,** **– vehicle overload on a very steep slope (maximum permissible all-up weight exceeded + angle > 18˚: e.g. towing a trailer or a caravan).**

AFTER REPAIR	If the computer has been replaced **(at the request of the Techline)**, initialise the electronic parking brake computer (see **Replacement of components**). Issue several braking and release commands to confirm the repair. Deal with any other faults.

GETtheMANUALS.org

DF025 **CONTINUED**	

2. DEF	***NOTES***	**Special notes:** – This fault indicates that the electronic parking brake computer detected front wheel movement although the parking brake was applied with maximum force. When this fault appears on its own it is an operating warning that indicates that the vehicle's conditions of use are on the limit (the braking system and parking brake are not normally the cause). This fault is an operational warning. Check the context in which it appears. **It may appear during:** **– an application request, whilst the vehicle is still being driven,** **– forced assisted release when starting, when the starting conditions have not been met,** **– parked on a steep slope with slippery surface,** **– incorrect use of a roller test bench which drives the front wheels (MOT test).** **If the fault is stored, refer to the statuses and parameters when it appears**. Explanation of counters: see **Introduction** section. If the fault is stored and **PR018 = 0 and PR022 > 25** clear the fault: do not take this fault into account.

Using the **diagnostic tool**, display the wheel speed parameters on the parameters screen. When stationary, these parameters must show **0 mph**. If this is not the case, carry out fault finding on the **anti-lock braking system** (see **38C**, **Anti-lock braking system**).
Check that the parking brake mechanical tensioning line is correct: – Parking brake cables correctly fitted. – Good condition of the parking brake cables (no seizing or deterioration). – Conformity, condition and proper functioning of the rear brake callipers. – Condition and conformity of rear brake pads. Carry out the necessary repairs.
Check that the vehicle is not overloaded.
Check that the vehicle's tyres are not bald.
If the fault persists, contact the **Techline**.

AFTER REPAIR	If the computer has been replaced **(at the request of the Techline)**, initialise the electronic parking brake computer (see **Replacement of components**). Issue several braking and release commands to confirm the repair. Deal with any other faults.

GETtheMANUALS.org

DF025 PRESENT OR STORED	VEHICLE MOVEMENT WITH MAXIMUM APPLICATION 1. DEF: The computer has detected vehicle movement when parked (parking brake applied)

NOTES	**Priorities when dealing with a number of faults:** First deal with faults **DF046 Brake motor/cables connection, DF042 Force sensor, DF035 Undervoltage, DF041 Slope sensor, DF049 Brake application, DF054 Battery voltage too high and DF055 Battery undervoltage**, if they are present or stored. If none of these faults is present or stored, the parking brake computer is not normally the cause.
	Conditions for applying the fault finding procedure to a stored fault: Apply the fault finding procedure even if the fault is **stored**. **Note:** The fault does not remain present after it has been detected.
	Special notes: – this fault indicates that the electronic parking brake computer detected movement of the vehicle although the parking brake was applied. – if this fault is present, with the ignition on, the buzzer on the instrument panel is activated (when the vehicle is moving with the parking brake applied). This fault is an operational warning. Check the context in which it appears. **It may appear during:** **– an application request, whilst the vehicle is still being driven,** **– forced assisted release when starting, when the starting conditions have not been met,** **– parked on a steep slope with slippery surface,** **– incorrect use of a roller test bench (MOT test).** **Only for Vdiag 08 and 0C:** **If there is a stored fault, refer to the statuses and parameters when it appears.** Explanation of counters: see **Introduction** section. If the fault is stored and **PR018 = 0 and PR022 > 25**, clear the fault: do not take this fault into account.

AFTER REPAIR	If the computer has been replaced **(at the request of the Techline)**, initialise the electronic parking brake computer (see **Replacement of components**). Issue several braking and release commands to confirm the repair. Deal with any other faults.

GETtheMANUALS.org

DF025 **CONTINUED**	

Using the diagnostic tool, display the wheel speed parameters on the parameters screen. When stationary, these parameters must show **0 mph**. If this is not the case, carry out fault finding on the anti-lock braking system.
Check that the parking brake mechanical tensioning line is correct: – Parking brake cables correctly fitted. – Good condition of the parking brake cables (no seizing or deterioration). – Conformity, condition and proper functioning of the rear brake callipers. – Condition and conformity of rear brake pads. Carry out the necessary repairs.
Check that the vehicle is not overloaded.
Check that the vehicle's tyres are not bald.
If the fault persists, contact the **Techline**.

AFTER REPAIR	If the computer has been replaced **(at the request of the Techline)**, initialise the electronic parking brake computer (see **Replacement of components**). Issue several braking and release commands to confirm the repair. Deal with any other faults.

GETtheMANUALS.org

DF028 PRESENT OR STORED	COMPUTER 1. DEF: Internal electronic fault 2. DEF: Internal electronic fault

NOTES	**Priorities when dealing with a number of faults:** This fault must be dealt with first.
	Conditions for applying the fault finding procedure to a stored fault: Apply the fault finding procedure even if the fault is **stored**.
	Special notes: Before replacing an electronic parking brake computer, **save the data from the old computer** (for vehicles fitted with a manual gearbox). For this operation, see **Replacement of components**.

Contact the **Techline**, without clearing the fault.

AFTER REPAIR	If the computer has been replaced **(at the request of the Techline)**, initialise the electronic parking brake computer (see **Replacement of components**). Issue several braking and release commands to confirm the repair. Deal with any other faults.

GETtheMANUALS.org

DF029 PRESENT OR STORED	COMPUTER 1. DEF: Internal electronic fault 2. DEF: Internal electronic fault

NOTES	**Priorities when dealing with a number of faults:** This fault must be dealt with first.
	Conditions for applying the fault finding procedure to a stored fault: Apply the fault finding procedure even if the fault is **stored**.
	Special notes: Before replacing an electronic parking brake computer, **save the data from the old computer** (for vehicles fitted with a manual gearbox). For this operation, see **Replacement of components**.

Contact the **Techline**, without clearing the fault.

AFTER REPAIR	If the computer has been replaced **(at the request of the Techline)**, initialise the electronic parking brake computer (see **Replacement of components**). Issue several braking and release commands to confirm the repair. Deal with any other faults.

GETtheMANUALS.org

DF035 PRESENT OR STORED	UNDERVOLTAGE 1. DEF: Insufficient feed voltage during the command

NOTES	**Priority in the event of a number of faults:** Deal with fault **DF055 Battery undervoltage** first if it is present or stored.
	Conditions for applying the fault finding procedure to a stored fault: Apply this fault finding procedure if the fault reappears after the ignition has been switched off and on again (+ forced after ignition feed: see **Introduction**) and an application or release request using the control lever.
	Special notes: This fault is a power supply fault and does not usually stem from the electronic parking brake computer. This fault does not indicate computer feed undervoltage but a significant drop in voltage to the parking brake motor while the command is being issued. **Only for Vdiag 08, 0C and 0D:** **If there is a stored fault, refer to the statuses and parameters when it appears.** Explanation of counters: see **Introduction**. If the fault is stored and **PR018 = 0** and **PR022 > 25**, clear the fault: do not take this fault into account.

Disconnect the electronic parking brake computer connector to check the **conformity of the supplies** and to check t**he insulation, continuity and the absence of interference resistance** on the following connections:

Electronic parking brake computer connector

track H4
(except Laguna II, Vel Satis and Espace IV) → **+ 12 V**
track G4

track H2
(except Laguna II, Vel Satis and Espace IV) → **earth**
track G2

Repair if necessary (see the vehicle wiring diagram).

Apply the brake and then release it (engine running) to check that during the command the voltage measured at the fuse does not drop below **10.5 V**.
Make the repairs necessary for the parking brake computer electrical supply to be correct (equal to the battery voltage).

If the fault persists, contact the **Techline**.

AFTER REPAIR	If the computer has been replaced **(at the request of the Techline)**, initialise the electronic parking brake computer (see **Replacement of components**). Issue several braking and release commands to confirm the repair. Deal with any other faults.

GETtheMANUALS.org

DF036 PRESENT OR STORED	INJECTION MULTIPLEX SIGNAL ABSENT 1. DEF: Multiplex signals absent or values invalid (fault with the computer generating the signal or multiplex line connection fault)

NOTES	**Priority in the event of a number of faults:** Deal with faults **DF055 Battery undervoltage and DF052 Multiplex network** first if they are present or stored.
	Deal with any injection computer faults first. The fault does not usually come from the electronic parking brake computer. **Note:** If there is a multiplex line fault like this one, the parking brake loses its assisted application and release functions.
	Conditions for applying the fault finding procedure to a stored fault: Apply this fault finding procedure if the fault reappears as present or stored after a fault has been cleared, and the ignition has been switched off and on again (forced **+ after ignition feed**: see **Introduction**).
	Special notes: This fault only relates to multiplex signals received from the injection computer. This fault indicates either that there is no transmission, or that the signals received by the parking brake are inconsistent. **Only for Vdiag 08, 0C and 0D:** **If there is a stored fault, refer to the statuses and parameters when it appears.** Explanation of counters: see **Introduction** section. If the fault is stored and **PR018 = 0** and **PR022 > 25**, clear the fault: do not take this fault into account. If the fault is stored and **PR019 < 10**, clear the fault: do not take this fault into account.

AFTER REPAIR	If the computer has been replaced **(at the request of the Techline)**, initialise the electronic parking brake computer (see **Replacement of components**). Issue several braking and release commands to confirm the repair. Deal with any other faults.

GETtheMANUALS.org

DF036 **CONTINUED**	

Using the diagnostic tool, run **fault finding on the multiplex network** and particularly on the injection computer - electronic parking brake computer segment. This check ensures that the various multiplex system connections are correct and finds any faulty segments. Carry out any necessary repairs.
If the multiplex network test did not find the faulty connection, carry out a **conformity check** to check that the statuses and parameters coming from the injection computer are present and correct (**ET019, PR015, PR017**). If the status and parameters shown here are not correct, carry out fault finding on the **injection**.
If the fault is still present, disconnect the injection computer connector to check that it is **good condition** as well as its clips (terminals), in particular the clips for the **multiplex tracks** (refer to the wiring diagram for the injection system fitted to the vehicle). Replace the clips if necessary.
If the fault persists, contact the **Techline**.

AFTER REPAIR	If the computer has been replaced **(at the request of the Techline)**, initialise the electronic parking brake computer (see **Replacement of components**). Issue several braking and release commands to confirm the repair. Deal with any other faults.

GETtheMANUALS.org

DF037 PRESENT OR STORED	NO ABS MULTIPLEX SIGNAL 1. DEF: Multiplex signals absent or values invalid (fault with the computer generating the signal or multiplex line connection fault)

NOTES	**Priority in the event of a number of faults:** Deal with faults **DF055 Battery undervoltage and DF052 Multiplex network** first if they are present or stored.
	Deal with any ABS computer faults first. The fault does not usually come from the electronic parking brake computer. **Note:** If this fault is present, the parking brake loses its assisted application and release functions.
	Conditions for applying the fault finding procedure to a stored fault: Apply this fault finding procedure if the fault reappears as present or stored after a fault has been cleared and the ignition has been switched off and on again (forced + after ignition feed: see **Introduction**).
	Special notes: This fault only relates to multiplex signals received from the ABS computer. This fault indicates either that there is no transmission, or that the signals received by the electronic parking brake computer are inconsistent.
	Only for Vdiag 08, 0C and 0D: **If there is a stored fault, refer to the statuses and parameters when it appears.** Explanation of counters: see **Introduction**. If the fault is stored and **PR018 = 0** and **PR022 > 25**, clear the fault: do not take this fault into account. If the fault is stored and **PR019 < 10**, clear the fault: do not take this fault into account.

AFTER REPAIR	If the computer has been replaced **(at the request of the Techline)**, initialise the electronic parking brake computer (see **Replacement of components**). Issue several braking and release commands to confirm the repair. Deal with any other faults.

GETtheMANUALS.org

DF037 **CONTINUED**	

Using the diagnostic tool, run **fault finding on the multiplex system** and particularly on the ABS computer-parking brake control unit segment. This check ensures that the various multiplex system connections are correct and finds any faulty segments. Carry out any necessary repairs.
If the multiplex system test did not find the faulty connection, carry out a **conformity check** to check that the parameters coming from the ABS computer are present and correct (**PR012, PR013, PR014**). If the parameters mentioned are not correct, carry out an **ABS** computer fault finding procedure (see **38C**, **Anti-lock braking system**).
If the fault is still present, disconnect the computer connector to check that it is in **good condition** as well as its clips (terminals), in particular the clips for the **multiplex tracks** (refer to the wiring diagram for the ABS computer fitted to the vehicle). Replace the clips if necessary.
If the fault persists, contact the **Techline**.

AFTER REPAIR	If the computer has been replaced **(at the request of the Techline)**, initialise the electronic parking brake computer (see **Replacement of components**). Issue several braking and release commands to confirm the repair. Deal with any other faults.

GETtheMANUALS.org

DF038 PRESENT OR STORED	NO AUTOMATIC TRANSMISSION MULTIPLEX SIGNAL 1. DEF: Multiplex signals absent or values invalid (fault with the computer generating the signal or multiplex line connection fault)

NOTES	**Priority in the event of a number of faults:** Deal with faults **DF055 Battery undervoltage and DF052 Multiplex network** first if they are present or stored.
	Deal with any automatic transmission computer faults first. The fault does not usually come from the electronic parking brake computer. **Note:** If this fault is present, the parking brake loses its assisted application and release functions.
	Conditions for applying the fault finding procedure to a stored fault: Apply this fault finding procedure if the fault reappears as present or stored after a fault has been cleared, and the ignition has been switched off and on again (forced **+ after ignition feed**: see **Introduction**).
	Special notes: This fault only relates to multiplex signals received from the automatic transmission computer. This fault indicates either that there is no signal or that the signals transmitted are inconsistent. **Only for Vdiag 08, 0C and 0D:** **If there is a stored fault, refer to the statuses and parameters when it appears.** Explanation of counters: see **Introduction**. If the fault is stored and **PR018 = 0** and **PR022 > 25**, clear the fault: do not take this fault into account. If the fault is stored and **PR019 < 15** clear the fault: do not take this fault into account.

AFTER REPAIR	If the computer has been replaced **(at the request of the Techline)**, initialise the electronic parking brake computer (see **Replacement of components**). Issue several braking and release commands to confirm the repair. Deal with any other faults.

GETtheMANUALS.org

DF038 **CONTINUED**	

Check the vehicle gearbox configuration: check that the configuration is not for a manual gearbox when the vehicle is fitted with an automatic transmission, or that it is not configured for an automatic transmission when the vehicle is manual. Using the diagnostic tool, run **fault finding on the multiplex system** and particularly on the automatic transmission computer-parking brake control unit segment. This check ensures that the various multiplex system connections are correct and finds any faulty segments. Carry out any necessary repairs.
If the multiplex system test did not find the faulty connection, carry out a **conformity check** to check that the status coming from the automatic transmission computer is present and correct (**ET018**). If status **ET018** is not correct, carry out fault finding on the **automatic transmission**.
If the fault is still present, disconnect the automatic transmission computer connector to check that it is **sound** as well as its clips (terminals), and in particular the clips for the **multiplex tracks** (refer to the wiring diagram for the automatic transmission computer fitted on the vehicle). Replace the clips if necessary.
If the fault persists, contact the **Techline**.

AFTER REPAIR	If the computer has been replaced **(at the request of the Techline)**, initialise the electronic parking brake computer (see **Replacement of components**). Issue several braking and release commands to confirm the repair. Deal with any other faults.

GETtheMANUALS.org

DF039 PRESENT OR STORED	NO UCH MULTIPLEX SIGNAL 1. DEF: Multiplex signals absent or values invalid (fault with the computer generating the signal or multiplex line connection fault)

NOTES	**Priority in the event of a number of faults:** Deal with faults **DF055 Battery undervoltage and DF052 Multiplex network** first if they are present or stored.
	Deal with any UCH computer faults first. The fault does not usually come from the electronic parking brake computer. **Note:** If this fault is present, the parking brake loses its assisted application and release functions.
	Conditions for applying the fault finding procedure to a stored fault: Apply this fault finding procedure if the fault reappears as present or stored after a fault has been cleared and the ignition has been switched off and on again (forced + after ignition feed: see **Introduction**).
	Special notes: This fault only relates to multiplex signals received from the UCH computer. This fault indicates either that there is no signal or that the signals transmitted are inconsistent. **Only for Vdiag 08, 0C and 0D:** **If there is a stored fault, refer to the statuses and parameters when it appears.** Explanation of counters: see **Introduction**. If the fault is stored and **PR018 = 0 and PR022 > 25**, clear the fault: do not take this fault into account. If the fault is stored and **PR019 < 15** clear the fault: do not take this fault into account.

AFTER REPAIR	If the computer has been replaced **(at the request of the Techline)**, initialise the electronic parking brake computer (see **Replacement of components**). Issue several braking and release commands to confirm the repair. Deal with any other faults.

GETtheMANUALS.org

DF039 **CONTINUED**	

Using the diagnostic tool, run **fault finding on the multiplex system** and particularly on the UCH computer-parking brake control unit segment. This check ensures that the various multiplex system connections are correct and finds any faulty segments. Carry out any necessary repairs.
If the multiplex network test did not find the faulty connection, carry out **a conformity check** to check that the statuses coming from the UCH are present and correct (**ET001, ET014, ET016, ET017, PR001**). If the statuses and parameters specified are not correct, carry out fault finding on the **UCH**.
If the fault is still present, disconnect the connectors to ensure that the UCH connectors are in **good condition** as well as their clips (terminals), in particular the clips for the **multiplex tracks** (refer to the wiring diagram for the UCH fitted to the vehicle). Replace the clips if necessary.
If the fault persists, contact the **Techline**.

AFTER REPAIR	If the computer has been replaced **(at the request of the Techline)**, initialise the electronic parking brake computer (see **Replacement of components**). Issue several braking and release commands to confirm the repair. Deal with any other faults.

GETtheMANUALS.org

DF041 PRESENT OR STORED	SLOPE SENSOR 1. DEF: Signal inconsistency

NOTES	**Priorities when dealing with a number of faults:** This fault must be dealt with first.
	Special notes: The slope sensor is **internal** to the electronic parking brake computer, it cannot be separated. Before replacing an electronic parking brake computer, **save the data from the old computer** (for vehicles fitted with a manual gearbox). For this operation, (see **Replacement of components**).

Contact the **Techline** without clearing the faults.

AFTER REPAIR	If the computer has been replaced **(at the request of the Techline)**, initialise the electronic parking brake computer (see **Replacement of components**). Issue several braking and release commands to confirm the repair. Deal with any other faults.

GETtheMANUALS.org

DF042 PRESENT OR STORED	FORCE SENSOR CC.0: Short circuit to earth CC.1: Short circuit to + 12 V 1. DEF: Sensor supply fault 2 CO.0: Open circuit or short circuit to earth

CC.1 ***1. DEF***	***NOTES***	**Priorities when dealing with a number of faults:** This fault must be dealt with first. **Special notes:** The force sensor is internal to the electronic parking brake computer; it cannot be separated. Before replacing an electronic parking brake computer, **save the data from the old computer** (for vehicles fitted with a manual gearbox). For this operation, (see **Replacement of components**).

Contact the **Techline** without clearing the faults.

CC.0	***NOTES***	**Priority when dealing with a number of faults:** Deal with faults **DF055 Battery undervoltage and DF052 Multiplex network** first if they are present or stored. **Special notes:** The force sensor is internal to the electronic parking brake computer; it cannot be separated. Before replacing a parking brake control unit, **save the data from the old computer** (for vehicles fitted with a manual gearbox). For this operation, (see **Replacement of components**).

Contact the **Techline** without clearing the faults.

AFTER REPAIR	If the computer has been replaced **(at the request of the Techline)**, initialise the electronic parking brake computer (see **Replacement of components**). Issue several braking and release commands to confirm the repair. Deal with any other faults.

GETtheMANUALS.org

DF042 CONTINUED	

2 CO.0	***NOTES***	**Priorities when dealing with a number of faults:** This fault must be dealt with first.
		Special notes: The force sensor is internal to the electronic parking brake computer; it cannot be separated. **Only for Espace IV Ph2 and Vel satis Ph2 in Vdiag 0D.** Before replacing an electronic parking brake computer, **save the data from the old computer** (for vehicles fitted with a manual gearbox). For this operation, (see **Replacement of components**).

Contact the **Techline** without clearing the faults.

AFTER REPAIR	If the computer has been replaced **(at the request of the Techline)**, initialise the electronic parking brake computer (see **Replacement of components**). Issue several braking and release commands to confirm the repair. Deal with any other faults.

GETtheMANUALS.org

DF043 PRESENT OR STORED	PARKING BRAKE MOTOR 1. DEF: Internal electrical fault

NOTES	**Priorities when dealing with a number of faults:** This fault must be dealt with first.
	Special notes: Before replacing an electronic parking brake computer, **save the data from the old computer** (for vehicles fitted with a manual gearbox). For this operation, (see **Replacement of components**).

Check that the parking brake mechanical tensioning line is correct:
– Check the conformity, condition and correct operation of the brake callipers.
– Check the automatic adjustment of the rear brake callipers.

Contact the **Techline** without clearing the faults.

AFTER REPAIR	If the computer has been replaced **(at the request of the Techline)**, initialise the electronic parking brake computer (see **Replacement of components**). Issue several braking and release commands to confirm the repair. Deal with any other faults.

GETtheMANUALS.org

DF044 PRESENT OR STORED	BRAKING SWITCH CC.0: Short circuit to earth CC.1: Short circuit to + 12 V

NOTES	**Priority when dealing with a number of faults:** Deal first with faults **DF047 Manual control, DF035 Undervoltage, DF055 Battery undervoltage and DF054 Battery voltage too high**, if they are present or stored.
	Conditions for applying the fault finding procedure to a stored fault: The fault is declared present after the ignition is switched on (forced **+ after ignition feed**, see **Introduction**) and an application request using the control lever.
	The fault does not usually come from the electronic parking brake computer. **Special notes:** The braking switch is in fact the first contact of the lever (the lever travels about **3 mm**). This fault appears naturally when the lever is disconnected. **Note:** The fault warning light comes on **10 seconds** after the fault appears. **Only for Vdiag 08, 0C and 0D:** **If there is a stored fault, refer to the statuses and parameters when it appears.** Explanation of counters: see **Introduction**. If the fault is stored and **PR018 = 0** and **PR022 > 25**, clear the fault: do not take this fault into account. If the fault is stored and **PR019 < 3**, clear the fault: do not take this fault into account.

AFTER REPAIR	If the computer has been replaced **(at the request of the Techline)**, initialise the electronic parking brake computer (see **Replacement of components**). Issue several braking and release commands to confirm the repair. Deal with any other faults.

GETtheMANUALS.org

DF044 **CONTINUED 1**	

Using the diagnostic tool (**PARKING** sub-function), check the operation of the parking brake control lever. With the ignition on, statuses **ET008, ET009**, **ET010** should operate as follows:

	ET008 "Application switch position"	**ET009 "Redundant braking switch position"**	**ET010 "Release switch position"**
Lever **at rest**	**INACTIVE**	**INACTIVE**	**RELEASED**
Lever **pulled slightly (3 mm travel)**	**ACTIVE**	**INACTIVE**	**RELEASED**
Lever **pulled to end of travel**	**ACTIVE**	**ACTIVE**	**RELEASED**
Lever **pulled and release switch pressed**	**ACTIVE**	**ACTIVE**	**PRESSED**

If the statuses do not operate as explained above, check the **connection and condition** of the parking brake control lever connector.
Repair if necessary.

Check **the condition and connection** of the parking brake computer connectors and their clips (terminals).
Repair if necessary.

AFTER REPAIR	If the computer has been replaced **(at the request of the Techline)**, initialise the electronic parking brake computer (see **Replacement of components**). Issue several braking and release commands to confirm the repair. Deal with any other faults.

GETtheMANUALS.org

DF044 **CONTINUED 2**	

With the parking brake control lever connector disconnected, check the **insulation, continuity and absence of interference resistance** on the following connections:

Parking brake lever connector: **1216**		Electronic parking brake computer: **1217**
track 9	→	**track D2**
track 7	→	**track C2**

Repair if necessary.

With the parking brake control lever connector disconnected, switch on the ignition and **check for a 5 V supply (4 V < X < 5 V)** on **track 7** of the lever connector. If the power supply is not present and the parking brake computer is correctly supplied (no other faults detected by the diagnostic tool), then contact the **Techline**.

If the fault is still present, measure the resistance of the braking switch between **tracks 7 and 9** of the parking brake control lever.
Replace the lever (see **MR405 (Espace IV), MR395 (Laguna II) or MR370 (Scénic), Mechanical, 37B, Electronic parking brake, Lever: Removal - Refitting or MR353 (Vel Satis), Mechanical, 37B, Automatic parking brake, Lever**) if the resistance of the brake application switch is not approximately:
– Lever in rest position: **2700 Ω ± 100 Ω.**
– Lever pulled: **172 Ω ± 15 Ω**.

If the fault persists, contact the **Techline**.

AFTER REPAIR	If the computer has been replaced **(at the request of the Techline)**, initialise the electronic parking brake computer (see **Replacement of components**). Issue several braking and release commands to confirm the repair. Deal with any other faults.

GETtheMANUALS.org

DF045 PRESENT OR STORED	REDUNDANT BRAKE SWITCH 1. DEF: Signal inconsistency

NOTES	**Priority when dealing with a number of faults:** Deal first with faults **DF047 Manual control, DF035 Undervoltage and DF055 Battery voltage too low**, if they are present or stored.
	Conditions for applying the fault finding procedure to a stored fault: This fault must be dealt with first.
	Special notes: The fault does not usually come from the electronic parking brake computer. The redundant brake switch is the second contact of the lever (maximum lever travel). **Only for Vdiag 08, 0C and 0D:** **If there is a stored fault, refer to the statuses and parameters when it appears.** Explanation of counters: see **Introduction**. If the fault is stored and **PR018 = 0** and **PR022 > 25** clear the fault: do not take this fault into account. If the fault is stored and **PR019 < 3**, clear the fault: do not take this fault into account.

Using the diagnostic tool (**PARKING** sub-function), check the operation of the parking brake control lever. With the ignition switched on, statuses **ET008, ET009** and **ET010** should operate as follows:

	ET008 "Engagement switch position"	**ET009 "Redundant braking switch position"**	**ET010 "Release switch position"**
Lever **at rest**	**INACTIVE**	**INACTIVE**	**RELEASED**
Lever **pulled slightly (3 mm travel)**	**ACTIVE**	**INACTIVE**	**RELEASED**
Lever **pulled to end of travel**	**ACTIVE**	**ACTIVE**	**RELEASED**
Lever **pulled and release switch pressed**	**ACTIVE**	**ACTIVE**	**PRESSED**

If the statuses do not operate as explained above, check the **connection and condition** of the parking brake control lever connector.
Repair if necessary.

AFTER REPAIR	If the computer has been replaced **(at the request of the Techline)**, initialise the electronic parking brake computer (see **Replacement of components**). Issue several braking and release commands to confirm the repair. Deal with any other faults.

GETtheMANUALS.org

DF045 **CONTINUED**	

With the parking brake control lever connector disconnected, check the **insulation, continuity and absence of interference resistance** on the following connection:

Parking brake lever connector: **1216**		Electronic parking brake computer: **1217**
track 10	⟶	**track C3**

Repair if necessary.

With the parking brake control lever connector disconnected, check **for earth** on **track 2** of the lever connector.
Repair if necessary.

If the fault persists, **check the redundant braking switch**:
Lever in rest position: **insulation** between **tracks 2 and 10** of the lever.
Lever fully applied: **continuity** between **tracks 2 and 10** of the lever.
Replace the parking brake control lever if it does not function as indicated (see **MR405 (Espace IV), MR395 (Laguna II) or MR370 (Scénic), Mechanical, 37B, Electronic parking brake, Lever: Removal - Refitting or MR353 (Vel Satis), Mechanical, 37B, Automatic parking brake, Lever**).

If the fault persists, contact the **Techline**.

AFTER REPAIR	If the computer has been replaced **(at the request of the Techline)**, initialise the electronic parking brake computer (see **Replacement of components**). Issue several braking and release commands to confirm the repair. Deal with any other faults.

GETtheMANUALS.org

DF046 PRESENT OR STORED	BRAKE MOTOR/CABLES CONNECTION (EMERGENCY UNLOCKING) 1. DEF: Parking brake unlocked by the emergency handle

NOTES	**Priority when dealing with a number of faults:** Deal first with faults **DF003, DF004, DF028, DF029, DF035, DF041, DF042, DF043, DF050, DF054, DF055, DF057, DF058 and DF073** if they are present or stored.
	Conditions for applying the fault finding procedure to a stored fault: Apply this fault finding procedure if the fault recurs after the fault is cleared, with the ignition switched off and on again (forced **+ after ignition feed**, see **Introduction**), and the parking brake released then applied using the control lever.
	Special notes: The fault does not usually come from the electronic parking brake computer. This fault indicates that the electronic parking brake system has been unlocked by the manual control (if this is the case, check that the handle protector has not been damaged). Check that the emergency unlocking handle has not been manually pulled by the user, which would provoke this fault. The cables are reset by the parking brake release manual command or automatically (if the fault is present) when the vehicle is driven at more than **1.2 mph (2 km/h)** (the fault is then stored).
	Only for Vdiag 08, 0C and 0D: **If there is a stored fault, refer to the statuses and parameters when it appears.** Explanation of counters: see **Introduction**. If the fault is stored and **PR018 = 0** and **PR022 > 25** clear the fault: do not take this fault into account. If there has been no manual use of the emergency unlocking handle and if **PR019 > 5**, contact the **Techline**.

Check that the fault was not provoked by manual usage of the emergency unlocking handle. In this case, it is normal for the fault to arise; clear the fault.
Carry out a releasing command, then a braking command with the control lever to **reset the cables** of the parking brake.
Check the conformity of the parking brake mechanical tensioning line: correctly attached, no breakage. Check the conformity of the emergency unlocking cable. Carry out the necessary repairs.
Check that the braking force and maximum braking are operating correctly.
If the fault persists, contact the **Techline**.

AFTER REPAIR	If the computer has been replaced **(at the request of the Techline)**, initialise the electronic parking brake computer (see **Replacement of components**). Issue several braking and release commands to confirm the repair. Deal with any other faults.

GETtheMANUALS.org

DF047 PRESENT OR STORED	MANUAL CONTROL 1. DEF: No signal 2. DEF: Signal inconsistency 3. DEF: Short circuit 4. DEF: Lever fault

NOTES	**Priorities when dealing with a number of faults:** Deal with faults: **DF035 Undervoltage, DF055 Battery undervoltage and DF054 Battery voltage too high** first, if they are present or stored.
	Note: The fault does not usually come from the electronic parking brake computer. The fault is only stored after the brakes have been applied 3 times with the control level.
	Conditions for applying the fault finding procedure to a stored fault: Deal with the fault as if it were present.
	Only for Vdiag 08, 0C and 0D: **If there is a stored fault, refer to the statuses and parameters when it appears.** Explanation of counters: see **Introduction**. If the fault is stored and **PR018 = 0** and **PR022 > 25** clear the fault: do not take this fault into account. If the fault is stored and **PR019 < 3**, clear the fault: do not take this fault into account.

Using the diagnostic tool (**PARKING** sub-function), check the operation of the parking brake control lever. With the ignition switched on, statuses **ET008, ET009** and **ET010** should operate as follows:

	ET008 "Engagement switch position"	**ET009 "Redundant braking switch position"**	**ET010 "Release switch position"**
Lever **at rest**	**INACTIVE**	**INACTIVE**	**RELEASED**
Lever **pulled slightly (3 mm travel)**	**ACTIVE**	**INACTIVE**	**RELEASED**
Lever **pulled to end of travel**	**ACTIVE**	**ACTIVE**	**RELEASED**
Lever **pulled and release switch pressed**	**ACTIVE**	**ACTIVE**	**PRESSED**

AFTER REPAIR	If the computer has been replaced **(at the request of the Techline)**, initialise the electronic parking brake computer (see **Replacement of components**). Issue several braking and release commands to confirm the repair. Deal with any other faults.

GETtheMANUALS.org

DF047 CONTINUED	

If the statuses do not operate as explained above, check the **connection and condition** of the parking brake control lever connector.
Repair if necessary.

With the parking brake control lever connector disconnected, check **for earth** on **track 2** of the lever connector (repair if necessary).
Also **check for a 5 V supply (4 V < X < 5 V)** on **track 7** of the lever connector.
If the supply is not present and the parking brake computer is correctly supplied (no other faults detected by the diagnostic tool), then contact the **Techline**.

Check **the condition and connection** of the electronic parking brake computer connectors and their clips (terminals).
Repair if necessary.

With the parking brake control lever connector disconnected, check the **insulation** (from earth and to**+ 12 V** and the insulation of the 4 wires from each other), **the continuity and absence of interference resistance** on the following connections:

Parking brake lever connector: **1216**		Electronic parking brake computer: **1217**
track 9	→	**track D2**
track 7	→	**track C2**
track 10	→	**track C3**
track 4	→	**track D3**

Repair if necessary.

With the parking brake control unit connector disconnected, check the **insulation** between **tracks C2** and **D2** of the computer. If the tracks are in short circuit, replace the lever (see **Replacement of components**, **Part A/ Procedure for replacing an electronic parking brake computer**) (see **MR405 (Espace IV) or MR395 (Laguna II) or MR370 (Scénic), Mechanical, 37B, Electronic parking brake, Lever: Removal - Refitting or MR353 (Vel Satis), Mechanical, 37B, Automatic parking brake, Lever**).

If the fault persists, contact the **Techline**.

AFTER REPAIR	If the computer has been replaced **(at the request of the Techline)**, initialise the electronic parking brake computer (see **Replacement of components**). Issue several braking and release commands to confirm the repair. Deal with any other faults.

GETtheMANUALS.org

DF048 PRESENT OR STORED	RELEASE SWITCH 1. DEF: Signal inconsistency

NOTES	**Priority when dealing with a number of faults:** Deal first with faults **DF003, DF004, DF028, DF029, DF035, DF041, DF042, DF043, DF047, DF050, DF054, DF055, DF057, DF058 and DF073** if they are present or stored.
	Conditions for applying the fault finding procedure to a stored fault: The fault is declared present after the ignition is switched on (forced **+ after ignition feed**, see **Introduction**) and a brake release request using the control lever.
	Special notes: The fault does not usually come from the electronic parking brake computer. 8 applications (in **2 seconds**) using the control lever without pressing the release switch causes the fault to appear as present. **Only for Vdiag 08, 0C and 0D:** **If there is a stored fault, refer to the statuses and parameters when it appears.** Explanation of counters: see **Introduction**. If the fault is stored and **PR018 = 0** and **PR022 > 25** clear the fault: do not take this fault into account. If the fault is stored and **PR019 < 3**, clear the fault: do not take this fault into account.

Using the diagnostic tool (**PARKING** sub-function), check the operation of the parking brake control lever.
With the ignition switched on, statuses **ET008, ET009** and **ET010** should operate as follows:

	ET008 "Engagement switch position"	**ET009 "Redundant braking switch position"**	**ET010 "Release switch position"**
Lever **at rest**	**INACTIVE**	**INACTIVE**	**RELEASED**
Lever **pulled slightly (3 mm travel)**	**ACTIVE**	**INACTIVE**	**RELEASED**
Lever **pulled to end of travel**	**ACTIVE**	**ACTIVE**	**RELEASED**
Lever **pulled and release switch pressed**	**ACTIVE**	**ACTIVE**	**PRESSED**

AFTER REPAIR	If the computer has been replaced **(at the request of the Techline)**, initialise the electronic parking brake computer (see **Replacement of components**). Issue several braking and release commands to confirm the repair. Deal with any other faults.

GETtheMANUALS.org

DF048 **CONTINUED**	

If the statuses do not operate as explained above, check the **connection and condition** of the parking brake control lever connector.
Repair if necessary.

With the parking brake control lever connector disconnected, check **for earth** on **track 2** of the lever connector.
Repair if necessary.

Check **the connections and condition** of the electronic parking brake computer connectors and their clips (terminals) and its intermediate connector (under front left-hand seat).

With the parking brake control lever connector disconnected, check the **insulation, continuity and absence of interference resistance** on the following connection:

Parking brake lever connector: **1216**		Electronic parking brake computer: **1217**
track 4	→	**track D3**

Repair if necessary.

If the fault is still present, **check the release switch.**
Lever in rest position: **insulation** between **tracks 2 and 4** of the lever,
Lever fully applied and release switch pressed: **continuity** between **tracks 2 and 4** of the lever.
Replace the parking brake control lever if it does not function as indicated (see **Replacement of components, Part A/ Procedure for replacing the electronic parking brake computer**) (see **MR405 (Espace IV) or MR395 (Laguna II) or MR370 (Scénic), Mechanical, 37B, Electronic parking brake, Lever: Removal - Refitting or MR353 (Vel Satis), Mechanical, 37B, Automatic parking brake, Lever**).

If the fault persists, contact the **Techline**.

AFTER REPAIR	If the computer has been replaced **(at the request of the Techline)**, initialise the electronic parking brake computer (see **Replacement of components**). Issue several braking and release commands to confirm the repair. Deal with any other faults.

GETtheMANUALS.org

DF049 PRESENT OR STORED	BRAKING 1. DEF: Inconsistent braking value 2. DEF: Normal brake application value not reached 3. DEF: Normal brake release value not reached 4. DEF: Insufficient braking force

NOTES	**Conditions for applying the fault finding procedure to a stored fault:** The fault is declared present after: – a braking command is issued **on a slope**.
	Priorities when dealing with a number of faults: Deal with faults: **DF046 Brake motor / cables connection, DF050 Mechanical seizure, DF035 Undervoltage, DF058 Parking brake motor current and DF055 Battery undervoltage** first if they are present or stored.

Check that the parking brake mechanical tensioning line is correct:
- that the parking brake cables are fitted correctly (refer to the repair procedure),
- that the parking brake cables are in good condition (not seized or deteriorated),
- that the rear brake callipers are correct, in good condition and operating correctly,
- that the rear brake pads are correct and in good condition.

Carry out the necessary repairs.

Using the **diagnostic tool** statuses screen, display parameter **PR003 Slope value**.
If the value displayed is not 0 degrees (± 1) on level ground, carry out slope initialisation again (actuator control mode menu).

Using the **diagnostic tool** parameters screen, display the following parameters: **PR005 Force setpoint** and **PR004 Measured force value**. These must show the various values recorded in the conformity check.

Clear the fault, switch off the ignition for **5 minutes** (vehicle doors and windows closed), switch the ignition back on and repeat a braking command **on a slope**.

If the fault reappears, switch off the ignition and disconnect the computer supply fuse (fuse **F23** of the engine fuse box, refer to the wiring diagram) for approximately **1 minute**.
Reconnect the fuse, switch the ignition on and establish dialogue with the computer. Apply the brake to check whether the fault recurs.

If the fault reappears despite the above tests, or if the parameter values are not within conformity check tolerances while the brake is applied, then contact your **Techline**.

AFTER REPAIR	Clear the fault memory. Follow the instructions to confirm repair. If the computer has been replaced (**at the request of the Techline**), initialise the electronic parking brake computer (see **Replacement of components**). Issue several braking and release commands to confirm the repair. Deal with any other possible faults.

GETtheMANUALS.org

DF049 PRESENT OR STORED	BRAKING 1. DEF: Inconsistent braking value 2. DEF: Normal brake application value not reached 3. DEF: Normal brake release value not reached 4. DEF: Insufficient braking force

NOTES	**Priorities when dealing with a number of faults:** Deal first with faults **DF003 (1.DEF; 2.DEF), DF004, DF028, DF029, DF041, DF042, DF043, DF050, DF055, DF057, DF058 and DF073**.
	Conditions for applying the fault finding procedure to a stored fault: The fault is declared present after the ignition is switched on (forced **+ after ignition feed**, see **Introduction**) and an application request **on a slope**.

1. DEF	***NOTES***	**Special notes:** The **1.DEF** code indicates an inconsistency between the measured force value (**PR004**) and the parking brake status (**ET030: Electronic parking brake operation** when there is a fault in the fault context). This fault can appear after disconnecting the battery (parking brake applied).

Check the context of the fault when the fault appears:
If **ET030** is **STATUS 5, STATUS 6, STATUS 7, STATUS 8, STATUS 9 or STATUS 10** and if **PR004** is greater than **450 N** and if **PR012 Vehicle speed** is **0 mph (0 km/h)** when the fault appears: – check to see if the battery has been disconnected, if it has, the appearance of this fault is normal, clear the fault, – if not, check the computer supply voltage and the battery. Repair if necessary. If the fault persists, contact the **Techline**.
If **ET030** is **STATUS 5, STATUS 6, STATUS 7** and if **PR004** is less than **450 N** and if **PR012 Vehicle speed** is less than **3 mph (5 km/h)** when the fault appears: – Check for traces of heating on the brakes: – Check that the pads have returned correctly to the rest position. – Check that the small lever has sufficient return force. – Check that there is no friction or points of resistance on the cables. – If there is no indication of any defective operation of these components and if **PR019 < 3 and PR022 > 25 and PR018 < 15**, then clear the fault. – If not, contact the **Techline**.
If the fault is still present, contact the **Techline**.

AFTER REPAIR	If the computer has been replaced **(at the request of the Techline)**, initialise the electronic parking brake computer (see **Replacement of components**). Issue several braking and release commands to confirm the repair. Deal with any other faults.

GETtheMANUALS.org

DF049 **CONTINUED 1**	

2. DEF	***NOTES***	**Special notes:** The specification **2.DEF** mainly comes from a fault with the electrical power supply, braking application travel or the internal force sensor.

If this fault appears after the parking brake has been replaced:
- Check the conformity of the parking brake fitting.
- Check that the battery voltage **PR001** is greater than **12.5 V**.
- Clear the fault and restart the procedure for fitting the parking brake: see **Replacement of components**.

Check the fault context when the fault appears: if the battery voltage **PR001** is less than **9 V** when the fault appears, then:
- Check the supply line and that the resistance is less than **150 mΩ**.
- If there is no sign of a fault on the supply line and if **PR019 < 3** and **PR022 > 25** and **PR018 < 15** then clear the fault.

Check the fault context when the fault appears: If **ET028 Brake switch signal** is **PRESSED,** then:
- If **PR019 < 3** and **PR022 > 25** and **PR018 < 15**, then clear the fault.
- The fault can be caused when the user depresses the brake pedal **hard**, when the parking brake is being applied. If this is the case, clear the fault.

If there is a **loud** noise when applying, when maximum braking is requested, then the cause may be mechanical.

Check that the parking brake mechanical tensioning line is correct:
- Parking brake cables correctly fitted.
- Good condition of the parking brake cables (no seizing or deterioration).
- Conformity, condition and proper functioning of the rear brake callipers.
- Condition and conformity of rear brake pads.
- Conformity of rear brakes bleeding.

Carry out the necessary repairs.

Using the **diagnostic tool (PARKING** sub-function), display the parameters **PR005 Force setpoint** and **PR004 Measured force value**. These must have the various values recorded in the conformity check.

If the fault is still present, contact the **Techline**.

AFTER REPAIR	If the computer has been replaced **(at the request of the Techline)**, initialise the electronic parking brake computer (see **Replacement of components**). Issue several braking and release commands to confirm the repair. Deal with any other faults.

GETtheMANUALS.org

DF049 **CONTINUED 2**	

3. DEF ***4. DEF***	***NOTES***	**Special notes:** The specification **3.DEF** mainly comes from a fault with the electrical power supply or the internal force sensor. The **4.DEF** code is mainly generated by an electrical supply fault or an internal fault (motor, sensor, etc.). It indicates that the parking brake is neither applied or released.

If the fault persists, contact the **Techline**.

AFTER REPAIR	If the computer has been replaced **(at the request of the Techline)**, initialise the electronic parking brake computer (see **Replacement of components**). Issue several braking and release commands to confirm the repair. Deal with any other faults.

GETtheMANUALS.org

DF050 PRESENT OR STORED	MECHANICAL SEIZURE

NOTES	**Priorities when dealing with a number of faults:** Deal first with faults **DF055 Battery voltage too low, DF046 Brake motor/cables connection, DF042 Force sensor and DF035 Undervoltage** if they are present or stored.
	Conditions for applying fault finding procedures to stored faults: Deal with the fault as if it were present.

Check that the parking brake mechanical tensioning line is correct:
- Parking brake cables correctly fitted.
- Good condition of the parking brake cables (no seizing or deterioration).
- Conformity, condition and correct operation of the brake callipers.

Carry out the necessary repairs.

Check the brake callipers.
Carry out the necessary repairs.

If the fault is still present, contact the **Techline** without clearing the faults.

AFTER REPAIR	If the computer has been replaced **(at the request of the Techline)**, initialise the electronic parking brake computer (see **Replacement of components**). Issue several braking and release commands to confirm the repair. Deal with any other faults.

GETtheMANUALS.org

DF051 PRESENT OR STORED	SYSTEM FAULT AFTER COMPUTER REPLACEMENT

NOTES	**Special notes:** This fault indicates a malfunction due to not following procedures correctly: replacement or reconfiguration of the electronic parking brake computer was carried out with a present fault.
	Conditions for applying the fault finding procedure to a stored fault: Deal with the fault as if it were present.

Using the **diagnostic tool**, **run fault finding on the electronic parking brake computer**.
Deal with other present or stored faults first.
Carry out any necessary repairs. Clear the fault.

If no fault is displayed on the **diagnostic tool**, **carry out a conformity check** to check the conformity of the parking brake system.

If the conformity check and fault finding with the **diagnostic tool** have not enabled the fault to be solved (see **Introduction**) for **fault warning light management**, to find out which components may be causing the malfunction.

If the fault persists, contact the **Techline**.

AFTER REPAIR	If the computer has been replaced **(at the request of the Techline)**, initialise the electronic parking brake computer (see **Replacement of components**). Issue several braking and release commands to confirm the repair. Deal with any other faults.

GETtheMANUALS.org

DF052 PRESENT OR STORED	MULTIPLEX NETWORK 1. DEF: Problem receiving multiplex frames by the parking brake computer. The computer is not receiving any multiplex signals or else two computers are not communicating with the parking brake computer

NOTES	**Priorities when dealing with a number of faults:** Deal first with faults **DF003 (1.DEF; 2.DEF), DF004, DF028, DF029, DF041, DF042, DF043, DF050, DF055, DF057, DF058 and DF073**.
	Deal with any faults on the multiplex network first (see 88B, Multiplexing).
	Conditions for applying the fault finding procedure to a stored fault: Apply this fault finding procedure if the fault reappears as present after the ignition has been switched on (forced **+ after ignition feed**, see **Introduction**).
	Special notes: This fault indicates either a complete absence of multiplex signal transmission (no inconsistency) to the parking brake control unit, or no multiplex signal transmission from two computers (the continuity of the multiplex network lines may be correct, but if two computers fail to respond, this fault appears). The fault does not usually come from the electronic parking brake computer. **Note:** Using another battery for a boost when starting may trigger this fault. **Only for Vdiag 08, 0C and 0D:** **If there is a stored fault, refer to the statuses and parameters when it appears.** Explanation of counters: see **Introduction**. If the fault is stored and **PR018 = 0** and **PR022 > 25** clear the fault: do not take this fault into account.

AFTER REPAIR	If the computer has been replaced **(at the request of the Techline)**, initialise the electronic parking brake computer (see **Replacement of components**). Issue several braking and release commands to confirm the repair. Deal with any other faults.

GETtheMANUALS.org

DF052 **CONTINUED**	

Check that an additional booster battery has not been used when starting, if this is the case, this fault may appear.
Use the **diagnostic tool** to carry out a **multiplex system test**. This check ensures that the various multiplex system connections are correct and finds any faulty segments. Carry out any necessary repairs.
If the multiplex system test has not made it possible to find the defective connection, disconnect the electronic parking brake computer connector to check it is in **good condition** and check the condition of the clips (terminals) and in particular the clips for **tracks A2 and A3.** Replace the clips if necessary.
With the electronic parking brake computer connector disconnected, check **the insulation, continuity and the absence of interference resistance** on the connections between tracks **A2** and **A3** of the electronic parking brake computer and the following computers: – anti-lock braking system (see diagram of the various computers), – injection (see diagram of the different computers), – automatic transmission (see diagram of the different computers), – UCH (see diagram of the different computers), – Protection and Switching Unit (see diagram of the different computers). Repair if necessary.
If the fault persists, contact the **Techline**.

AFTER REPAIR	If the computer has been replaced **(at the request of the Techline)**, initialise the electronic parking brake computer (see **Replacement of components**). Issue several braking and release commands to confirm the repair. Deal with any other faults.

GETtheMANUALS.org

DF054 PRESENT OR STORED	BATTERY VOLTAGE TOO HIGH 1. DEF: Battery voltage too high

NOTES	**Priorities when dealing with a number of faults:** Deal first with faults **DF003 (1.DEF; 2.DEF), DF004, DF028, DF029, DF041, DF042, DF043, DF050, DF057, DF058 and DF073**.
	Conditions for applying the fault finding procedure to a stored fault: Apply this fault finding procedure if the fault appears as present again after the ignition has been switched on (forced **+ after ignition feed**, see **Introduction**).
	Special notes: The fault does not usually come from the electronic parking brake computer. This fault appears as present if the computer supply voltage is greater than **16.5 V**, and becomes stored when the voltage goes back down below **15.7 V**. **Note:** Using another battery for a boost when starting may trigger this fault. **Only for Vdiag 08, 0C and 0D.** **If there is a stored fault, refer to the statuses and parameters when it appears.** Explanation of counters: see **Introduction**. If the fault is stored and **PR018 = 0** and **PR022 > 25**, clear the fault: do not take this fault into account.

Check the charging circuit: the alternator should not supply a voltage of less than **+ 12 V** or greater than **+ 14.4 V** (engine at idle speed).
Check the alternator and the regulator.
Carry out the necessary repairs.

If the fault is still present, check that no electrical system using the same supply fuse as the electronic parking brake computer is faulty.

If the fault persists, contact the **Techline**.

AFTER REPAIR	If the computer has been replaced **(at the request of the Techline)**, initialise the electronic parking brake computer (see **Replacement of components**). Issue several braking and release commands to confirm the repair. Deal with any other faults.

GETtheMANUALS.org

DF055 PRESENT OR STORED	BATTERY UNDERVOLTAGE 1. DEF: Battery voltage too low 2. DEF: Electronic parking brake reset when vehicle being driven

1. DEF	***NOTES***	**Special notes:** The fault does not usually come from the electronic parking brake computer. This fault appears as present if the computer supply voltage is less than **10.3 V**, and becomes stored once the voltage rises back above **10.5 V**. **Only for Vdiag 08, 0C and 0D:** **If there is a stored fault, refer to the statuses and parameters when it appears.** Explanation of counters: see **Introduction**. If the fault is stored and **PR018 = 0** and **PR022 > 25**, clear the fault: do not take this fault into account.
		Note: This fault may appear if starting is very difficult.
		Conditions for applying the fault finding procedure to a stored fault: Apply this fault finding procedure if the fault reappears as present after the ignition has been switched on (forced **+ after ignition feed**, see **Introduction**).

2. DEF	***NOTES***	**Note:** This fault only affects Vdiag 0D.
		Priorities when dealing with a number of faults: Deal first with faults **DF046 Brake motor/cables connection, DF042 Force sensor, DF035 Undervoltage, DF041 Slope sensor, DF049 Brake application, DF054 Battery voltage too high and DF055 Battery undervoltage** if they are present or stored. If none of these faults is present or stored, the parking brake computer is not normally the cause.

AFTER REPAIR	If the computer has been replaced **(at the request of the Techline)**, initialise the electronic parking brake computer (see **Replacement of components**). Issue several braking and release commands to confirm the repair. Deal with any other faults.

GETtheMANUALS.org

DF055 **CONTINUED**	

2. DEF	***NOTES***	**Special notes:** This fault is generated after the automatic parking brake is switched on whilst driving or following an internal reset. With the anti-lock braking system, this detection is active at **> 0.6 mph (> 1 km/h)**, otherwise the multiplex signal emitted by the injection computer must be 1.
		Note: The driver is only informed of this fault after 16 successive detections. This fault may be due to battery disconnections or vehicle supply faults, in which case it is associated with fault 1.DEF (battery voltage too low) dealt with previously.

If the frequency counter (**PR016**) > 3 and if the onboard network (battery, wiring) analysis does not bring up any present or stored fault under battery voltage, contact the **Techline**.

Check that the battery, battery - starter - alternator connection lead, battery earth - chassis lead and the chassis earth - engine and transmission assembly lead are in **good condition**.
Repair if necessary.

Check the charging circuit: the alternator should not supply a voltage of less than **+ 12 V** or greater than **+ 14.4 V** (engine at idle speed).
Carry out the necessary repairs.

track H4
(except Laguna II, Vel Satis and Espace IV) → **+ 12 V**
track G4

track H2
(except Laguna II, Vel Satis and Espace IV) → **earth**
track G2

Repair if necessary (see the vehicle wiring diagram).

If the fault is still present, check that no electrical system using the same supply fuse as the electronic parking brake computer is faulty.

If the fault persists, contact the **Techline**.

AFTER REPAIR	If the computer has been replaced **(at the request of the Techline)**, initialise the electronic parking brake computer (see **Replacement of components**). Issue several braking and release commands to confirm the repair. Deal with any other faults.

GETtheMANUALS.org

DF056 PRESENT OR STORED	BRAKE CABLES INCORRECTLY FITTED 1. DEF: Incorrect brake cable fitting detected

NOTES	**Priorities when dealing with a number of faults:** Deal first with faults **DF003 (1.DEF; 2.DEF), DF004, DF028, DF029, DF041, DF042, DF043, DF050, DF057, DF058 and DF073**.
	Special notes: This fault only appears during configuration of the parking brake. The fault does not usually come from the electronic parking brake computer.
	Conditions for applying the fault finding procedure to a stored fault: Deal with the fault as if it were present.

Check that the battery voltage **PR001** is above **12.5 V**.

Check that the mechanical tensioning line is correctly fitted: cables, connections, callipers.
If the parking brake cables are damaged (particularly at the calliper collars), replace both cables (see **MR405 (Espace IV) or MR395 (Laguna II) or MR370 (Scénic), Mechanical, 37A, Mechanical component controls, Parking brake cables: Removal - Refitting or MR353 (Vel Satis), Mechanical, 37B, Automatic parking brake, Brake cables**).
Start the electronic parking brake computer configuration process again: run command **VP011 Computer calibration and initialisation** (see **Replacement of components**).

If the fault persists, contact the **Techline**.

AFTER REPAIR	If the computer has been replaced **(at the request of the Techline)**, initialise the electronic parking brake computer (see **Replacement of components**). Issue several braking and release commands to confirm the repair. Deal with any other faults.

GETtheMANUALS.org

DF057 PRESENT OR STORED	COMPUTER INTERNAL TEMPERATURE SENSOR 1. DEF: Temperature sensor outside correct range (internal fault) 2. DEF: Internal electronic fault

NOTES	**Conditions for applying the fault finding procedure to a stored fault:** Apply the fault finding procedure even if the fault is **stored**.
	Special notes: Before replacing an electronic parking brake computer, **save the data from the old computer** (for vehicles fitted with a manual gearbox). For this operation, (see **Replacement of components**).

Contact the **Techline** without clearing the faults.

AFTER REPAIR	If the computer has been replaced **(at the request of the Techline)**, initialise the electronic parking brake computer (see **Replacement of components**). Issue several braking and release commands to confirm the repair. Deal with any other faults.

GETtheMANUALS.org

DF058 PRESENT OR STORED	PARKING BRAKE MOTOR CURRENT 1. DEF: Inconsistent current value

NOTES	**Conditions for applying the fault finding procedure to a stored fault:** Apply the fault finding procedure even if the fault is **stored**.
	Special notes: Before replacing an electronic parking brake computer, **save the data from the old computer** (for vehicles fitted with a manual gearbox). For this operation, (see **Replacement of components**).

Check to see if battery polarity has been inverted, if this is the case, clear the fault and check that the electronic parking brake computer is operating correctly (see **System operation**).
If the fault is still present, contact the **Techline** without clearing the fault.

AFTER REPAIR	If the computer has been replaced **(at the request of the Techline)**, initialise the electronic parking brake computer (see **Replacement of components**). Issue several braking and release commands to confirm the repair. Deal with any other faults.

GETtheMANUALS.org

DF059 PRESENT OR STORED	NO PROTECTION AND SWITCHING UNIT MULTIPLEX SIGNAL 1. DEF: Multiplex signals absent or values invalid (fault with the computer generating the signal or multiplex line connection fault)

NOTES	**Priority when dealing with a number of faults:** Deal with faults **DF055 Battery undervoltage and DF052 Multiplex network** first if they are present or stored.
	Deal with any Protection and Switching Unit computer faults first. The fault does not usually come from the electronic parking brake computer.
	Conditions for applying the fault finding procedure to a stored fault: Apply this fault finding procedure if the fault reappears as present or stored after it has been cleared, the ignition has been switched back on (forced **+ after ignition feed**: see **Introduction**), and the parking brake is released then applied using the control lever.
	Special notes: This fault only relates to multiplex signals received from the **Protection and Switching Unit** computer. This fault indicates either that there is no signal or that the signals transmitted are inconsistent. **Note:** If a multiplex line fault such as this is present, the electronic parking brake computer may lose all or some of its assisted parking functions (application and release).
	If there is a stored fault, refer to the statuses and parameters when it appears. Explanation of counters: see **Introduction** section. If the fault is stored and **PR018 = 0** and **PR022 > 25**, clear the fault: do not take this fault into account.

AFTER REPAIR	If the computer has been replaced **(at the request of the Techline)**, initialise the electronic parking brake computer (see **Replacement of components**). Issue several braking and release commands to confirm the repair. Deal with any other faults.

GETtheMANUALS.org

DF059 **CONTINUED**	

Use the diagnostic tool to carry out a **multiplex system test**. This check ensures that the various multiplex system connections are correct and finds any faulty segments. Carry out any necessary repairs.
If the multiplex network test did not find the faulty connection, carry out **a conformity check** to check that the status from the Protection and Switching Unit computer is present and correct (**ET016, PR015, PR017**). Check the gearbox contacts. If the status and parameters shown here are not correct, carry out fault finding on the **Protection and Switching Unit** (see **87G, Engine compartment connection unit**).
If the fault is still present, disconnect the Protection and Switching Unit computer connector to check that the connector and its clips (terminals) are in **good condition**, especially the **multiplex track** clips (see the wiring diagram of the **Protection and Switching Unit** fitted to the vehicle). Replace the clips if necessary.
If the fault persists, contact the **Techline**.

AFTER REPAIR	If the computer has been replaced **(at the request of the Techline)**, initialise the electronic parking brake computer (see **Replacement of components**). Issue several braking and release commands to confirm the repair. Deal with any other faults.

GETtheMANUALS.org

DF073 PRESENT OR STORED	COMPUTER 1. DEF: Internal electrical fault

NOTES	**Priority when dealing with a number of faults:** This fault must be dealt with first.
	Conditions for applying the fault finding procedure to a stored fault: Deal with this fault as if it were present.
	Special notes: The electronic parking brake computer has detected a fault during standby mode (ignition off, vehicle doors and windows closed and lever warning light off) Before replacing an electronic parking brake computer, **save the data from the old computer** (for vehicles fitted with a manual gearbox). For this operation, (see **Replacement of components**).

Contact the **Techline**, without clearing the fault.

AFTER REPAIR	If the computer has been replaced **(at the request of the Techline)**, initialise the electronic parking brake computer (see **Replacement of components**). Issue several braking and release commands to confirm the repair. Deal with any other faults.

GETtheMANUALS.org

NOTES	Only carry out this conformity check after carrying out a **complete check** using the diagnostic tool. **Application conditions: ignition on (forced + after ignition, see Introduction)** **Note:** **The interpretation of these statuses and parameters is only valid with the ignition switched on,** the statuses and parameters displayed in blue on the diagnostic tool is information supplied by other computers, which are transmitted via the multiplex network. If these variables display inconsistent values, make sure that the multiplex system test has not shown up any faulty connections. **Repair the faulty multiplex connections before looking for a possible problem with the signals.** Each sub-function in this test is associated with a **Fault finding chart**. **Special notes:** The diagnostic tool may display the message **Computer busy** when displaying statuses and parameters. This message is displayed when the parking brake is applying or releasing the brake, because the computer gives priority to controlling the motor before transmitting variables. If this message is displayed, exit the current screen and then return to it.

MAIN SCREEN

Order	Function	Parameter or Status Checked or Action	Display and notes	Fault finding
1	Parking brake operation status	**ET024:** System operation	**CUSTOMER MODE**	If the status displays **FACTORY MODE**, the computer is **not operational**. To enter **CUSTOMER MODE**, initialise the computer again, by running command **VP011 Computer calibration and initialisation** (see **Replacement of components**).
2	Computer electrical supply	**ET001:** + After ignition feed	**Ignition off: ABSENT** **Ignition on: PRESENT**	In the event of a fault on this status, refer to the interpretation of status **ET001: + after ignition supply.**
		PR001: Battery voltage	**9.6 V < PR001 < 15 V**	If the value of the parameter is not within this range, check **the insulation, continuity and the absence of interference resistance** on the computer supplies and earths (see wiring diagram). If the fault is still present, carry out **fault finding on the charging circuit** (see **Technical Note 6014A, Checking the charging circuit**).

GETtheMANUALS.org

NOTES	Only carry out this conformity check after carrying out a **complete check** using the diagnostic tool. **Application conditions: ignition on (forced + after ignition, see Introduction)** **Note:** **The interpretation of these statuses and parameters is only valid with the ignition switched on,** the statuses and parameters displayed in blue on the diagnostic tool is information supplied by other computers, which are transmitted via the multiplex network. If these variables display inconsistent values, make sure that the multiplex system test has not shown up any faulty connections. **Repair the faulty multiplex connections before looking for a possible problem with the signals.** Each sub-function in this test is associated with a **Fault finding chart**. **Special notes** The diagnostic tool may display the message **Computer busy** when displaying statuses and parameters. This message is displayed when the parking brake is applying or releasing the brake, because the computer gives priority to controlling the motor before transmitting variables. If this message is displayed, exit the current screen and then return to it.

MAIN SCREEN (CONTINUED 1)

Order	Function	Parameter or Status Checked or Action	Display and notes	Fault finding
3	Electronic parking brake	**PR005:** Force setting **PR004:** Measured force value	In rest position: **X = 0 N** When applying the brake on a level surface: **400 < X < 550 N** When fully applied (lever fully pulled for 2 seconds) on a level surface: **1100 < X < 1150 N** **Note**: **depressing the brake pedal once** when the parking brake is applied changes the measured force value (change in the tension of the brake cables) and the parking brake may be over-applied. **Interpretation of these parameters is only valid without any pressure on the brake pedal.**	The difference between the reference and measured values must not be more than - **50 N or + 100 N**. If the measured value does not reach or exceeds the reference value (mechanical or electrical fault with the control), the electronic parking brake computer will detect a fault (**DF025 Vehicle movement with maximum application, DF049 Brake application** or **DF050 Mechanical jamming**). If one of these three faults is displayed by the diagnostic tool, use the relevant interpretation.

GETtheMANUALS.org

NOTES	Only carry out this conformity check after carrying out a **complete check** using the diagnostic tool. **Application conditions: ignition on (forced + after ignition, see Introduction)** **Note:** **The interpretation of these statuses and parameters is only valid with the ignition switched on,** the statuses and parameters displayed in blue on the diagnostic tool is information supplied by other computers, which are transmitted via the multiplex network. If these variables display inconsistent values, make sure that the multiplex system test has not shown up any faulty connections. **Repair the faulty multiplex connections before looking for a possible problem with the signals.** Each sub-function in this test is associated with a **Fault finding chart**. **Special notes** The diagnostic tool may display the message **Computer busy** when displaying statuses and parameters. This message is displayed when the parking brake is applying or releasing the brake, because the computer gives priority to controlling the motor before transmitting variables. If this message is displayed, exit the current screen and then return to it.

MAIN SCREEN (CONTINUED 2)

Order	Function	Parameter or Status Checked or Action	Display and Notes	Fault finding
	Electronic parking brake (continued)	**ET011:** Parking brake	No movement of the lever: **INACTIVE** When released: **Released** (while releasing, then **INACTIVE**). When applying the brake: **STATUS 1 Static braking** During emergency braking: **STATUS 2 Dynamic braking** (over 6 mph (10 km/h)). When the system is faulty: **DEFECTIVE**	If the status does not operate as specified, **refer to the interpretation** of fault **DF043 Parking brake motor**.

GETtheMANUALS.org

NOTES	Only carry out this conformity check after carrying out a **complete check** using the diagnostic tool. **Application conditions: ignition on (forced + after ignition, see Introduction)** **Note:** **The interpretation of these statuses and parameters is only valid with the ignition switched on,** the statuses and parameters displayed in blue on the diagnostic tool is information supplied by other computers, which are transmitted via the multiplex network. If these variables display inconsistent values, make sure that the multiplex system test has not shown up any faulty connections. **Repair the faulty multiplex connections before looking for a possible problem with the signals.** Each sub-function in this test is associated with a **Fault finding chart**. **Special notes** The diagnostic tool may display the message **Computer busy** when displaying statuses and parameters. This message is displayed when the parking brake is applying or releasing the brake, because the computer gives priority to controlling the motor before transmitting variables. If this message is displayed, exit the current screen and then return to it.

SUB FUNCTION: PARKING

Order	Function	Parameter or Status Checked or Action		Display and notes	Fault finding
1	Computer electrical supply	**ET001:**	+ After ignition feed	**Ignition off: ABSENT** **Ignition on: PRESENT**	In the event of a fault on this status, refer to the interpretation of status **ET001: + after ignition supply.**
		PR001:	Battery voltage	**9 V < X < 15 V**	In the event of a fault with this parameter, check **the insulation, continuity and the absence of interference resistance** on the computer supplies and earths (see wiring diagram). If the fault is still present, carry out **fault finding on the charging circuit** (see **Technical Note 6014A, Checking the charging circuit**).
		ET009:	Redundant braking switch position	Lever released: **INACTIVE** Lever pulled to the second contact (end of travel): **ACTIVE**	If the status does not operate as specified, **use the interpretation** of status **ET009 Redundant braking switch position**.
		ET010:	Release switch position	Lever in rest position **RELEASED** Lever fully pulled and releasing switch pressed: **PRESSED**	If the status does not operate as specified, **apply the interpretation** of status **ET010 Releasing switch position**.

GETtheMANUALS.org

NOTES	Only carry out this conformity check after carrying out a **complete check** using the diagnostic tool. **Application conditions: ignition on (forced + after ignition, see Introduction)** **Note:** **The interpretation of these statuses and parameters is only valid with the ignition switched on**, the statuses and parameters displayed in blue on the diagnostic tool is information supplied by other computers, which are transmitted via the multiplex network. If these variables display inconsistent values, make sure that the multiplex system test has not shown up any faulty connections. **Repair the faulty multiplex connections before looking for a possible problem with the signals.** Each sub-function in this test is associated with a **Fault finding chart**. **Special notes** The diagnostic tool may display the message **Computer busy** when displaying statuses and parameters. This message is displayed when the parking brake is applying or releasing the brake, because the computer gives priority to controlling the motor before transmitting variables. If this message is displayed, exit the current screen and then return to it.

SUB-FUNCTION: PARKING (CONTINUED 1)

Order	Function	Parameter or Status Checked or Action	Display and notes	Fault finding
2	Parking brake control lever	**ET008:** Braking switch position	Lever released: **INACTIVE** Lever pulled to the first contact (approximately 3 mm travel): **ACTIVE**	If the status does not operate as specified, **apply the interpretation** of status **ET008 Brake application switch position**.
		ET009: Redundant braking switch position	Lever released: **INACTIVE** Lever pulled to the second contact (end of travel): **ACTIVE**	If the status does not operate as specified, **use the interpretation** of status **ET009 Redundant braking switch position**.
		ET010: Release switch position	Lever in rest position **RELEASED** Lever fully applied and release switch pressed: **PRESSED**	If the status does not operate as specified, **apply the interpretation** of status **ET010 Releasing switch position**.

GETtheMANUALS.org

NOTES	Only carry out this conformity check after carrying out a **complete check** using the diagnostic tool. **Application conditions: ignition on (forced + after ignition, see Introduction)** **Note:** **The interpretation of these statuses and parameters is only valid with the ignition switched on**, the statuses and parameters displayed in blue on the diagnostic tool is information supplied by other computers, which are transmitted via the multiplex network. If these variables display inconsistent values, make sure that the multiplex system test has not shown up any faulty connections. **Repair the faulty multiplex connections before looking for a possible problem with the signals.** Each sub-function in this test is associated with a **Fault finding chart**. **Special notes** The diagnostic tool may display the message **Computer busy** when displaying statuses and parameters. This message is displayed when the parking brake is applying or releasing the brake, because the computer gives priority to controlling the motor before transmitting variables. If this message is displayed, exit the current screen and then return to it.

SUB-FUNCTION: PARKING (CONTINUED 2)

Order	Function	Parameter or Status Checked or Action	Display and notes	Fault finding
3	Parking brake assist	**PR005:** Force setting **PR004:** Measured force value	In rest position: **X = 0 N** When applying the brake on a level surface: **400 < X < 550 N** When fully applied (lever fully pulled for 2 seconds) on a level surface: **1100 < X < 1150 N** **Note: depressing the brake pedal once** when the parking brake is applied changes the measured force value (change in the tension of the brake cables) and the parking brake may be over-applied. **Interpretation of these parameters is only valid without any pressure on the brake pedal.**	The difference between the reference and measured values must not be more than - **50 N or + 100 N**. If the measured value does not reach or exceeds the reference value (mechanical or electrical fault with the control), the electronic parking brake computer will detect a fault (**DF025 Vehicle movement with maximum application, DF049 Brake application** or **DF050 Mechanical jamming**). If one of these three faults is displayed by the diagnostic tool, use the relevant interpretation.

GETtheMANUALS.org

NOTES	Only carry out this conformity check after carrying out a **complete check** using the diagnostic tool. **Application conditions: ignition on (forced + after ignition, see Introduction)** **Note:** **The interpretation of these statuses and parameters is only valid with the ignition switched on**, the statuses and parameters displayed in blue on the diagnostic tool is information supplied by other computers, which are transmitted via the multiplex network. If these variables display inconsistent values, make sure that the multiplex system test has not shown up any faulty connections. **Repair the faulty multiplex connections before looking for a possible problem with the signals.** Each sub-function in this test is associated with a **Fault finding chart**. **Special notes** The diagnostic tool may display the message **Computer busy** when displaying statuses and parameters. This message is displayed when the parking brake is applying or releasing the brake, because the computer gives priority to controlling the motor before transmitting variables. If this message is displayed, exit the current screen and then return to it.

SUB-FUNCTION: PARKING (CONTINUED 3)

Order	Function	Parameter or Status checked or Action	Display and Notes	Fault finding
		ET011: Parking brake	No movement of the lever: **INACTIVE** When released: **Released** (while releasing, then **INACTIVE**). When applying the brake: **STATUS 1 Static braking** During emergency braking: **STATUS 2 Dynamic braking** (over 6 mph (10 km/h)). When the system is faulty: **DEFECTIVE**	If the status does not operate as specified, **refer to the interpretation** of fault **DF043 Parking brake motor**.
4	Braking	**AC002:** Braking	**ACTIVE** or **INACTIVE**	
5	Release	**AC003:** Release	**ACTIVE** or **INACTIVE**	

GETtheMANUALS.org

NOTES	Only carry out this conformity check after carrying out a **complete check** using the diagnostic tool. **Application conditions: ignition on (forced + after ignition, see Introduction)** **Note:** **The interpretation of these statuses and parameters is only valid with the ignition switched on**, the statuses and parameters displayed in blue on the diagnostic tool is information supplied by other computers, which are transmitted via the multiplex network. If these variables display inconsistent values, check that the multiplex system test has not shown up any faulty connections. **Repair the faulty multiplex connections before looking for a possible problem with the signals.** Each sub-function in this test is associated with a **Fault finding chart**. **Special notes** The diagnostic tool may display the message **Computer busy** when displaying statuses and parameters. This message is displayed when the parking brake is applying or releasing the brake, because the computer gives priority to controlling the motor before transmitting variables. If this message is displayed, exit the current screen and then return to it.

SUB-FUNCTION: AUTOMATIC APPLICATION

Order	Function	Parameter or Status Checked or Action		Display and notes	Fault finding
1	Assisted braking configuration	**ET022:**	Automatic braking configuration	**WITH** or **WITHOUT**	Depending on the customer's request, the electronic parking brake computer may be configured **WITH** or **WITHOUT** assisted braking when the engine stops. Refer to the interpretation of status **ET022 Automatic braking configuration**.
2	Computer electrical supply	**ET001:**	+ After ignition feed	**Ignition off: ABSENT** **Ignition on: PRESENT**	In the event of a fault on this status, refer to the interpretation of status **ET001: + after ignition feed**.
3	Engine	**PR015:**	Engine speed	**0 rpm**	In the event of a fault with this parameter and these statuses, make sure that the injection computer is in fact sending signals (absence of faults **DF036 No injection multiplex transmission** and **DF052 Multiplex network**). If the fault is still present, run **fault finding** on the injection computer (see **13B, Diesel injection or 17B, Petrol injection**).
		ET019:	Engine	**STOPPED** Other possibilities depending on the operating status of the engine: **RUNNING** **- UNDER STARTER** **- STALLED**	

GETtheMANUALS.org

NOTES	Only carry out this conformity check after carrying out a **complete check** using the diagnostic tool. **Application conditions: ignition on (forced + after ignition, see Introduction)** **Note:** **The interpretation of these statuses and parameters is only valid with the ignition switched on**, the statuses and parameters displayed in blue on the diagnostic tool is information supplied by other computers, which are transmitted via the multiplex network. If these variables display inconsistent values, check that the multiplex system test has not shown up any faulty connections. **Repair the faulty multiplex connections before looking for a possible problem with the signals.** Each sub-function in this test is associated with a **Fault finding chart**. **Special notes** The diagnostic tool may display the message **Computer busy** when displaying statuses and parameters. This message is displayed when the parking brake is applying or releasing the brake, because the computer gives priority to controlling the motor before transmitting variables. If this message is displayed, exit the current screen and then return to it.

SUB-FUNCTION: AUTOMATIC APPLICATION (CONTINUED 1)

Order	Function	Parameter or Status Checked or Action	Display and notes	Fault finding
4	Wheel speeds	**PR012:** Vehicle speed	**X = 0 mph (km/h)**	In the event of a fault on this parameter, check that the anti-lock braking system computer is sending the signal correctly (absence of faults **DF037 No ABS multiplex signal** and **DF052 Multiplex network**). If the fault is still present, run **fault finding** on the anti-lock braking system computer (see **38C, Anti-lock braking system**).
5	Electronic parking brake	**ET011:** Parking brake	No movement of the lever: **INACTIVE** When released: **Released** (while releasing, then **INACTIVE**). When applying the brake: **STATUS 1 Static braking** During emergency braking: **STATUS 2 Dynamic braking** (over 6 mph (10 km/h)). When the system is faulty: **DEFECTIVE**	If the status does not operate as specified, **refer to the interpretation** of fault **DF043 Parking brake motor**.

GETtheMANUALS.org

NOTES	Only carry out this conformity check after carrying out a **complete check** using the diagnostic tool. **Application conditions: ignition on (forced + after ignition, see Introduction)** **Note:** **The interpretation of these statuses and parameters is only valid with the ignition switched on**, the statuses and parameters displayed in blue on the diagnostic tool is information supplied by other computers, which are transmitted via the multiplex network. If these variables display inconsistent values, check that the multiplex system test has not shown up any faulty connections. **Repair the faulty multiplex connections before looking for a possible problem with the signals.** Each sub-function in this test is associated with a **Fault finding chart**. **Special notes:** The diagnostic tool may display the message **Computer busy** when displaying statuses and parameters. This message is displayed when the parking brake is applying or releasing the brake, because the computer gives priority to controlling the motor before transmitting variables. If this message is displayed, exit the current screen and then return to it.

SUB FUNCTION: AUTOMATIC APPLICATION (CONTINUED 2)

Order	Function	Parameter or Status Checked or Action	Display and notes	Fault finding
	Electronic parking brake (continued)	**PR005:** Force setting	In rest position: **X = 0 N** When applying the brake on a level surface: **400 < X < 550 N** When fully applied (lever fully pulled for 2 seconds) on a level surface: **1100 < X < 1150 N** **Note:** **depressing the brake pedal once** when the parking brake is applied changes the measured value of the force (change in the tension of the brake cables) and the parking brake may be over-applied. **Interpretation of these parameters is only valid without any pressure on the brake pedal.**	The difference between the reference and measured values must not be more than **- 50 N or + 100 N**. If the measured value does not reach or exceeds the reference value (mechanical or electrical fault with the control), the electronic parking brake computer will detect a fault (**DF025 Vehicle movement with maximum application, DF049 Brake application** or **DF050 Mechanical jamming**). If one of these three faults is displayed by the diagnostic tool, use the relevant interpretation.
6	Vehicle incline	**PR004:** Measured force value	On horizontal ground the value is: **- 2 d° < X < + 2 d°** Possible values according to the slope: **- 25 d° < X < + 25 d°**	On level ground, if the value displayed is not **0 d° ± 2**: Refer to the interpretation of parameter **PR003 Slope value**
		PR003: Slope value		

GETtheMANUALS.org

NOTES	Only carry out this conformity check after carrying out a **complete check** using the diagnostic tool. **Application conditions: ignition on (forced + after ignition, see Introduction)** **Note:** **The interpretation of these statuses and parameters is only valid with the ignition switched on**, the statuses and parameters displayed in blue on the diagnostic tool is information supplied by other computers, which are transmitted via the multiplex network. If these variables display inconsistent values, check that the multiplex system test has not shown up any faulty connections. **Repair the faulty multiplex connections before looking for a possible problem with the signals.** Each sub-function in this test is associated with a **Fault finding chart**. **Special notes** The diagnostic tool may display the message **Computer busy** when displaying statuses and parameters. This message is displayed when the parking brake is applying or releasing the brake, because the computer gives priority to controlling the motor before transmitting variables. If this message is displayed, exit the current screen and then return to it.

SUB-FUNCTION: AUTOMATIC RELEASE

Order	Function	Parameter or Status Checked or Action		Display and notes	Fault finding
1	Assisted release configuration	**ET023:**	Automatic release configuration	**WITH** or **WITHOUT**	Depending on the customer's request, the electronic parking brake computer may be configured **WITH** or **WITHOUT** assisted brake release when the vehicle moves forward. Refer to the interpretation of status **ET023 Automatic release configuration**.
2	Computer electrical supply	**ET001:**	+ After ignition feed	**Ignition off: ABSENT** **Ignition on: PRESENT**	In the event of a fault on this status, refer to the interpretation of status **ET001: + after ignition feed**.

GETtheMANUALS.org

NOTES	Only carry out this conformity check after carrying out a **complete check** using the diagnostic tool. **Application conditions: ignition on (forced + after ignition, see Introduction)** **Note:** **The interpretation of these statuses and parameters is only valid with the ignition switched on**, the statuses and parameters displayed in blue on the diagnostic tool is information supplied by other computers, which are transmitted via the multiplex network. If these variables display inconsistent values, check that the multiplex system test has not shown up any faulty connections. **Repair the faulty multiplex connections before looking for a possible problem with the signals.** Each sub-function in this test is associated with a **Fault finding chart**. **Special notes** The diagnostic tool may display the message **Computer busy** when displaying statuses and parameters. This message is displayed when the parking brake is applying or releasing the brake, because the computer gives priority to controlling the motor before transmitting variables. If this message is displayed, exit the current screen and then return to it.

SUB-FUNCTION: AUTOMATIC RELEASE (CONTINUED 1)

Order	Function	Parameter or Status Checked or Action	Display and notes	Fault finding
3	Vehicles fitted with a manual gearbox	**ET016:** Manual gearbox gear lever position.	**Neutral: NEUTRAL** or **Gear engaged: NOT IN NEUTRAL**	In the event of a fault with these statuses, check that the UCH is sending signals correctly (absence of fault **DF039 No UCH multiplex signal**) If the fault is still present, run **fault finding** on the UCH (see **87B, Passenger compartment connection unit**).
		ET017: Reverse gear engaged	**YES** (lever in reverse gear). **NO** (for other gear lever positions).	
4	Vehicles fitted with an automatic gearbox	**ET018:** Automatic gearbox lever position	**Depending on the lever position:** **P, R, N, D** or **Manual mode** (manual mode = sequential gear selection position).	In the event of a fault with these statuses, check that the computers concerned are sending signals correctly (absence of fault **DF038 No automatic transmission multiplex signal and DF052 Multiplex network**) If the fault is still present run **fault finding on** the computer concerned.
		ET017: Reverse gear engaged	**YES** (selector lever in **R**). **NO** (for other gear lever positions).	

GETtheMANUALS.org

NOTES	Only carry out this conformity check after carrying out a **complete check** using the diagnostic tool. **Application conditions: ignition on (forced + after ignition, see Introduction)** **Note:** **The interpretation of these statuses and parameters is only valid with the ignition switched on**, the statuses and parameters displayed in blue on the diagnostic tool is information supplied by other computers, which are transmitted via the multiplex network. If these variables display inconsistent values, check that the multiplex system test has not shown up any faulty connections. **Repair the faulty multiplex connections before looking for a possible problem with the signals.** Each sub-function in this test is associated with a **Fault finding chart**. **Special notes** The diagnostic tool may display the message **Computer busy** when displaying statuses and parameters. This message is displayed when the parking brake is applying or releasing the brake, because the computer gives priority to controlling the motor before transmitting variables. If this message is displayed, exit the current screen and then return to it.

SUB-FUNCTION: AUTOMATIC RELEASE (CONTINUED 2)

Order	Function	Parameter or Status Check or Action	Display and Notes	Fault finding
5	Door opening switches	**ET014:** Door opening switches	**OPEN:** driver's door open. **CLOSED:** driver's door closed. **Note:** This status only works with the driver's door.	If the status is not operating as shown, check that the UCH is correctly sending the signal (absence of faults **DF039 No UCH multiplex signal** and **DF052 Multiplex network**). If the status operates with the passenger door but not the driver's door, reinitialise the computer by running command **VP011 Computer calibration and initialisation** (see **Replacement of components**) to configure the correct type of steering (right or left-hand drive). If the fault is still present, run **fault finding** on the UCH (see **87B, Passenger compartment connection unit**).

GETtheMANUALS.org

NOTES	Only carry out this conformity check after carrying out a **complete check** using the diagnostic tool. **Application conditions: ignition on (forced + after ignition, see Introduction)** **Note:** **The interpretation of these statuses and parameters is only valid with the ignition switched on**, the statuses and parameters displayed in blue on the diagnostic tool is information supplied by other computers, which are transmitted via the multiplex network. If these variables display inconsistent values, check that the multiplex system test has not shown up any faulty connections. **Repair the faulty multiplex connections before looking for a possible problem with the signals.** Each sub-function in this test is associated with a **Fault finding chart**. **Special notes:** The diagnostic tool may display the message **Computer busy** when displaying statuses and parameters. This message is displayed when the parking brake is applying or releasing the brake, because the computer gives priority to controlling the motor before transmitting variables. If this message is displayed, exit the current screen and then return to it.

SUB-FUNCTION: AUTOMATIC RELEASE (CONTINUED 3)

Order	Function	Parameter or Status Checked or Action	Display and notes	Fault finding
6	Clutch pedal	**PR006:** Clutch pedal position	No load position: **0% < X < 20%** --- Pedal fully depressed: Right-hand drive: **50 < X < 70%** Left-hand drive: **70 < X < 90%**	In the event of a fault, check that the potentiometer is fitted correctly. If the fault is still present, **consult the interpretation** of fault **DF015 Clutch position sensor circuit.** **Note:** The clutch pedal operating values differ according to the type of steering.
7	Accelerator pedal	**PR017:** Accelerator pedal position	No load position: **0 < X < 10%** --- Pedal depressed fully (depressed past resistance point): **110 < X < 120%** **Invalid value: 118%** (this value means that the signal is not being received, e.g.: ignition switched off).	In the event of a fault with this parameter, check that the injection computer is correctly sending the signal (absence of fault **DF036 No injection multiplex signal**) If the fault is still present, run **fault finding** on the injection computer (see **13B, Diesel injection or 17B, Petrol injection**). **Note: the value of this parameter depends on the injection fitted to the vehicle. The values noted in this check are therefore only average values (refer to the injection conformity check).**

GETtheMANUALS.org

NOTES	Only carry out this conformity check after carrying out a **complete check** using the diagnostic tool. **Application conditions: ignition on (forced + after ignition, see Introduction)** **Note:** **The interpretation of these statuses and parameters is only valid with the ignition switched on**, the statuses and parameters displayed in blue on the diagnostic tool is information supplied by other computers, which are transmitted via the multiplex network. If these variables display inconsistent values, check that the multiplex system test has not shown up any faulty connections. **Repair the faulty multiplex connections before looking for a possible problem with the signals.** Each sub-function in this test is associated with a **Fault finding chart**. **Special notes** The diagnostic tool may display the message **Computer busy** when displaying statuses and parameters. This message is displayed when the parking brake is applying or releasing the brake, because the computer gives priority to controlling the motor before transmitting variables. If this message is displayed, exit the current screen and then return to it.

SUB-FUNCTION: AUTOMATIC RELEASE (CONTINUED 4)

Order	Function	Parameter or Status Check or Action	Display and Notes	Fault finding
8	Engine	**PR015:** Engine speed	**0 rpm**	In the event of a fault with this parameter and these statuses, make sure that the injection computer is in fact sending signals (absence of faults **DF036 No injection multiplex transmission** and **DF052 Multiplex network**). If the fault is still present, run **fault finding** on the injection computer (see **13B, Diesel injection or 17B, Petrol injection**).
		ET019: Engine	**STOPPED** Other possibilities depending on the operating status of the engine: **- RUNNING** **- UNDER STARTER** **- STALLED** (in the event where the engine is not stopped in the normal way)	

GETtheMANUALS.org

NOTES	Only carry out this conformity check after carrying out a **complete check** using the diagnostic tool. **Application conditions: ignition on (forced + after ignition, see Introduction)** **Note:** **The interpretation of these statuses and parameters is only valid with the ignition switched on**, the statuses and parameters displayed in blue on the diagnostic tool is information supplied by other computers, which are transmitted via the multiplex network. If these variables display inconsistent values, check that the multiplex system test has not shown up any faulty connections. **Repair the faulty multiplex connections before looking for a possible problem with the signals.** Each sub-function in this test is associated with a **Fault finding chart**. **Special notes** The diagnostic tool may display the message **Computer busy** when displaying statuses and parameters. This message is displayed when the parking brake is applying or releasing the brake, because the computer gives priority to controlling the motor before transmitting variables. If this message is displayed, exit the current screen and then return to it.

SUB-FUNCTION: AUTOMATIC RELEASE (CONTINUED 5)

Order	Function	Parameter or Status Checked or Action	Display and notes	Fault finding
9	Wheel speeds	**PR012:** Vehicle speed	**X = 0 mph (km/h)**	In the event of a fault with this parameter, check that the anti-lock braking system computer is sending the signal correctly (absence of faults **DF037 No ABS system multiplex signal** and **DF052 Multiplex network**). If the fault is still present, run **fault finding** on the anti-lock braking system computer (see **38C, Anti-lock braking system**).

GETtheMANUALS.org

NOTES	Only carry out this conformity check after carrying out a **complete check** using the diagnostic tool. **Application conditions: ignition on (forced + after ignition, see Introduction)** **Note:** **The interpretation of these statuses and parameters is only valid with the ignition switched on**, the statuses and parameters displayed in blue on the diagnostic tool is information supplied by other computers, which are transmitted via the multiplex network. If these variables display inconsistent values, check that the multiplex system test has not shown up any faulty connections. **Repair the faulty multiplex connections before looking for a possible problem with the signals.** Each sub-function in this test is associated with a **Fault finding chart**. **Special notes** The diagnostic tool may display the message **Computer busy** when displaying statuses and parameters. This message is displayed when the parking brake is applying or releasing the brake, because the computer gives priority to controlling the motor before transmitting variables. If this message is displayed, exit the current screen and then return to it.

SUB-FUNCTION: AUTOMATIC RELEASE (CONTINUED 6)

Order	Function	Parameter or Status Checked or Action	Display and notes	Fault finding
10	Electronic parking brake	**PR005:** Force setting **PR004:** Measured force value	In rest position: **X = 0 N** When applying the brake on a level surface: **400 < X < 550 N** When fully applied (lever fully pulled for 2 seconds) on a level surface: **1100 < X < 1150 N** **Note**: **depressing the brake pedal once** when the parking brake is applied changes the measured force value (change in the tension of the brake cables) and the parking brake may be over-applied. **Interpretation of these parameters is only valid without any pressure on the brake pedal.**	The difference between the reference and measured values must not be more than - **50 N or + 100 N**. If the measured value does not reach or exceeds the reference value (mechanical or electrical fault with the control), the electronic parking brake computer will detect a fault (**DF025 Vehicle movement with maximum application, DF049 Brake application** or **DF050 Mechanical jamming**). If one of these three faults is displayed by the diagnostic tool, use the relevant interpretation.

GETtheMANUALS.org

NOTES	Only carry out this conformity check after carrying out a **complete check** using the diagnostic tool. **Application conditions: ignition on (forced + after ignition, see Introduction)** **Note:** **The interpretation of these statuses and parameters is only valid with the ignition switched on**, the statuses and parameters displayed in blue on the diagnostic tool is information supplied by other computers, which are transmitted via the multiplex network. If these variables display inconsistent values, check that the multiplex system test has not shown up any faulty connections. **Repair the faulty multiplex connections before looking for a possible problem with the signals.** Each sub-function in this test is associated with a **Fault finding chart**. **Special notes** The diagnostic tool may display the message **Computer busy** when displaying statuses and parameters. This message is displayed when the parking brake is applying or releasing the brake, because the computer gives priority to controlling the motor before transmitting variables. If this message is displayed, exit the current screen and then return to it.

SUB-FUNCTION: AUTOMATIC RELEASE (CONTINUED 7)

Order	Function	Parameter or Status Check or Action	Display and Notes	Fault finding
11	Electronic parking brake	**ET011:** Parking brake	No movement of the lever: **INACTIVE** When released: **Released** (while releasing, then **INACTIVE**) When applying the brake: **STATUS 1: Static braking** During emergency braking: **STATUS 2: Dynamic braking** (over 6 mph (10 km/h)). When the system is faulty: **DEFECTIVE**	If the status does not function as indicated, **consult the interpretation** of fault **DF043 Parking brake motor**.
12	Vehicle incline	**PR003:** Slope value	On horizontal ground the value is: **- 2 d° < X < + 2 d°** Possible values according to the slope: **- 25 d° < X < + 25 d°**	On a level surface, if the reading is not **0 d° ± 2**: Refer to the interpretation of parameter **PR003 Slope value**.

GETtheMANUALS.org

NOTES	Only carry out this conformity check after carrying out a **complete check** using the diagnostic tool. **Application conditions: ignition on (forced + after ignition, see Introduction)** **Note:** **The interpretation of these statuses and parameters is only valid with the ignition switched on**, the statuses and parameters displayed in blue on the diagnostic tool is information supplied by other computers, which are transmitted via the multiplex network. If these variables display inconsistent values, check that the multiplex system test has not shown up any faulty connections. **Repair the faulty multiplex connections before looking for a possible problem with the signals.** Each sub-function in this test is associated with a **Fault finding chart**. **Special notes** The diagnostic tool may display the message **Computer busy** when displaying statuses and parameters. This message is displayed when the parking brake is applying or releasing the brake, because the computer gives priority to controlling the motor before transmitting variables. If this message is displayed, exit the current screen and then return to it.

SUB-FUNCTION: EMERGENCY BRAKING

Order	Function	Parameter or Status Checked or Action	Display and notes	Fault finding
1	Engine	**ET019:** Engine	**STOPPED** Other possibilities depending on the operating status of the engine: **- RUNNING** **- UNDER STARTER** **- STALLED**	In the event of a fault with this status, check that the injection computer is sending the signal correctly (absence of faults **DF036 No injection multiplex signal** and **DF052 Multiplex network**). If the fault is still present, run **fault finding** on the injection computer (see **13B, Diesel injection or 17B, Petrol injection**).
2	Wheel speeds	**PR012:** Vehicle speed	**X = 0 mph (km/h)**	In the event of a fault with these parameters, check that the anti-lock braking system computer is sending the signals correctly (absence of faults **DF037 No ABS multiplex signal** and **DF052 Multiplex network**). If the fault is still present, run **fault finding** on the anti-lock braking system computer (see **38C, Anti-lock braking system**).
		PR013: Rear left-hand wheel speed	**X = 0 mph (km/h)**	
		PR014: Rear right-hand wheel speed	**X = 0 mph (km/h)**	

GETtheMANUALS.org

NOTES	Only carry out this conformity check after carrying out a **complete check** using the diagnostic tool. **Application conditions: ignition on (forced + after ignition, see Introduction)** **Note:** **The interpretation of these statuses and parameters is only valid with the ignition switched on**, the statuses and parameters displayed in blue on the diagnostic tool is information supplied by other computers, which are transmitted via the multiplex network. If these variables display inconsistent values, check that the multiplex system test has not shown up any faulty connections. **Repair the faulty multiplex connections before looking for a possible problem with the signals.** Each sub-function in this test is associated with a **Fault finding chart**. **Special notes:** The diagnostic tool may display the message **Computer busy** when displaying statuses and parameters. This message is displayed when the parking brake is applying or releasing the brake, because the computer gives priority to controlling the motor before transmitting variables. If this message is displayed, exit the current screen and then return to it.

SUB-FUNCTION: EMERGENCY BRAKING (CONTINUED 1)

Order	Function	Parameter or Status Checked or Action		Display and notes	Fault finding
3	Parking brake control lever	**ET008:**	Braking switch position	Lever released: **INACTIVE** Lever pulled to the first contact (approximately 3 mm travel): **ACTIVE**	If the status does not operate as specified, **apply the interpretation** of status **ET008 Brake application switch position**.
		ET009:	Redundant braking switch position	Lever released: **INACTIVE** Lever pulled to the second contact (end of travel): **ACTIVE**	If the status does not operate as specified, **use the interpretation** of status **ET009 Redundant braking switch position**.
		ET010:	Release switch position	Lever in rest position **RELEASED** Lever fully pulled and releasing switch pressed: **PRESSED**	If the status does not operate as specified, **apply the interpretation** of status **ET010 Releasing switch position**.

GETtheMANUALS.org

NOTES	Only carry out this conformity check after carrying out a **complete check** using the diagnostic tool. **Application conditions: ignition on (forced + after ignition, see Introduction)** **Note:** **The interpretation of these statuses and parameters is only valid with the ignition switched on**, the statuses and parameters displayed in blue on the diagnostic tool is information supplied by other computers, which are transmitted via the multiplex network. If these variables display inconsistent values, check that the multiplex system test has not shown up any faulty connections. **Repair the faulty multiplex connections before looking for a possible problem with the signals.** Each sub-function in this test is associated with a **Fault finding chart**. **Special notes:** The diagnostic tool may display the message **Computer busy** when displaying statuses and parameters. This message is displayed when the parking brake is applying or releasing the brake, because the computer gives priority to controlling the motor before transmitting variables. If this message is displayed, exit the current screen and then return to it.

SUB FUNCTION: EMERGENCY BRAKING (CONTINUED 2)

Order	Function	Parameter or Status Checked or Action	Display and notes	Fault finding
4	Electronic parking brake	**ET011:** Parking brake	No movement of the lever: **INACTIVE** When released: **Released** (while releasing, then **INACTIVE**) When applying the brake: **STATUS 1: Static braking** During emergency braking: **STATUS 2: Dynamic braking** (over 6 mph (10 km/h)). When the system is faulty: **DEFECTIVE**	If the status does not function as indicated, **consult the interpretation** of fault **DF043 Parking brake motor**.

GETtheMANUALS.org

NOTES	Only carry out this conformity check after carrying out a **complete check** using the diagnostic tool. **Application conditions: ignition on (forced + after ignition, see Introduction)** **Note:** **The interpretation of these statuses and parameters is only valid with the ignition switched on**, the statuses and parameters displayed in blue on the diagnostic tool is information supplied by other computers, which are transmitted via the multiplex network. If these variables display inconsistent values, make sure that the multiplex system test has not shown up any faulty connections. **Repair the faulty multiplex connections before looking for a possible problem with the signals.** Each sub-function in this test is associated with a **Fault finding chart**. **Special notes** The diagnostic tool may display the message **Computer busy** when displaying statuses and parameters. This message is displayed when the parking brake is applying or releasing the brake, because the computer gives priority to controlling the motor before transmitting variables. If this message is displayed, exit the current screen and then return to it.

SUB FUNCTION: EMERGENCY BRAKING (CONTINUED 3)

Order	Function	Parameter or Status Checked or Action	Display and notes	Fault finding
1	Parking brake assist	**PR005:** Force setting **PR004:** Measured force value	In rest position: **X = 0 N** When applying the brake on a level surface: **400 < X < 550 N** When fully applied (lever fully pulled for 2 seconds) on a level surface: **1100 < X < 1150 N** **Note:** **depressing the brake pedal once** when the parking brake is applied changes the measured value of the force (change in the tension of the brake cables) and the parking brake may be over-applied. **Interpretation of these parameters is only valid without any pressure on the brake pedal.**	The difference between the reference and measured values must not be more than **- 50 N or + 100 N**. If the measured value does not reach or exceeds the reference value (mechanical or electrical fault with the control), the electronic parking brake computer will detect a fault (**DF025 Vehicle movement with maximum application, DF049 Brake application** or **DF050 Mechanical jamming**). If one of these three faults is displayed by the diagnostic tool, use the relevant interpretation.

GETtheMANUALS.org

Tool status	Diagnostic tool title
ET001	+ After ignition supply
ET008	Manual control: brake application switch
ET009	Redundant braking switch position
ET010	Manual control: brake releasing switch
ET011	Parking brake
ET014	Door opening switches
ET016	Manual gearbox lever position
ET017	Reverse gear engaged
ET018	Automatic gearbox lever position
ET019	Engine
ET022	Automatic braking configuration
ET024	System operation

GETtheMANUALS.org

ET001	+ AFTER IGNITION FEED

NOTES	None

This status means there is a + 12 V computer after ignition.
When the ignition is switched off, the status displays: ABSENT.
When the ignition is switched on, the status displays: PRESENT.

If the status does not operate as specified: disconnect the electronic parking brake computer connector to check the insulation, continuity and the absence of interference resistance on the following connections:
Automatic parking brake computer connector

track H4
(except Laguna II, Vel Satis and Espace IV) track G4 → **+ 12 V**

track H2
(except Laguna II, Vel Satis and Espace IV) track G2 → **earth**

Repair if necessary (see the vehicle wiring diagram).

If the connections are correct, the power is correctly supplied to the electronic parking brake computer, but the fault is still present, contact the Techline.

AFTER REPAIR	Repeat the conformity check from the start.

FPA_V0C_ET001 / FPA_V04_ET001 / FPA_V08_ET001 / FPA_V0D_ET001

GETtheMANUALS.org

ET008 **ET009** **ET010**	MANUAL CONTROL: BRAKE APPLICATION SWITCH REDUNDANT BRAKE APPLICATION SWITCH POSITION MANUAL CONTROL: BRAKE RELEASING SWITCH

NOTES	None

Using the diagnostic tool (**PARKING** sub-function), check the operation of the parking brake control lever. With the ignition on, statuses **ET008, ET009, ET010** should operate as follows:

	ET008 Manual control: brake application switch	**ET009 "Redundant braking switch position"**	**ET010 Manual control: brake releasing switch**
Lever **in rest position**	**INACTIVE**	**INACTIVE**	**RELEASED**
Lever **applied slightly (3 mm travel)**	**ACTIVE**	**INACTIVE**	**RELEASED**
Lever **applied fully**	**ACTIVE**	**ACTIVE**	**RELEASED**
Lever **applied and release button pressed**	**ACTIVE**	**ACTIVE**	**PRESSED**

If the statuses do not operate as specified, refer to the fault finding procedure for fault **DF047 Manual control**.

AFTER REPAIR	Repeat the conformity check from the start.

GETtheMANUALS.org

ET022	AUTOMATIC BRAKING CONFIGURATION

NOTES	**Special notes:** To understand the operation of assisted brake application, refer to **System operation**.

This status indicates the assisted braking configuration status.
This configuration can be checked on two screens.

- Configuration reading screen (repair mode): **LC009 Vehicle configuration** (**NORMAL** with braking, **COLD CLIMATE** without assisted braking).
- Variables screen (fault finding mode, assisted brake application sub-function).

ET022 Automatic braking configuration.
When the assisted braking is **ACTIVE**, the status should be **WITH**.
When the assisted braking is not **ACTIVE** (for cold countries, for example), the status should be **WITHOUT**.
If the configuration does not match the customer's request, reconfigure the electronic parking brake computer by activating configuration **CF007 Vehicle configuration** (repair mode, see **Configuration and programming**).

AFTER REPAIR	Repeat the conformity check from the start.

GETtheMANUALS.org

Tool parameter	Diagnostic tool title
PR001	Battery voltage
PR003	Slope value
PR004	Measured force value
PR005	Force setting
PR006	Clutch pedal position
PR012	Vehicle speed
PR013	Rear left-hand wheel speed
PR014	Rear right-hand wheel speed
PR015	Engine speed
PR017	Accelerator pedal position

GETtheMANUALS.org

PR003	SLOPE VALUE

NOTES	None

This parameter shows the vehicle's angle on a slope (X-axis).
The value displayed represents degrees (and not percentage grade).
Normally, this parameter should display:
- On level ground: **- 2 d° < X < + 2 d°**
- Possible values, depending on slope: **- 25 d° < X < + 25 d°**

If the values displayed are not correct, **contact the Techline**.

AFTER REPAIR	Repeat the conformity check from the start.

GETtheMANUALS.org

AC002	BRAKING

NOTES	**Special notes:** The commands are found in the tool's fault finding mode, **Actuator command** button.

Running this command tightens the electronic parking brake cables.
It can therefore be used to test operation of the electronic parking brake motor, either to display a present fault or to test motor operation in the event of a control lever failure.
Note:
Before running this command, check that the brake cables are correctly fitted and that no one is working on the vehicle.
Only run this command with the parking brake released.

AFTER REPAIR	Repeat the conformity check from the start.

GETtheMANUALS.org

AC003	RELEASE

NOTES	**Special notes:** The commands are found in the tool's fault finding mode, **Actuator command** button.

Running this command releases the electronic parking brake cables.
It can therefore be used to test operation of the electronic parking brake motor, either to display a present fault or to test motor operation in the event of a control lever failure.
Note:
Before running this command, check that the brake cables are correctly fitted and that no one is working on the vehicle.
Only run this command with the parking brake engaged.

AFTER REPAIR	Repeat the conformity check from the start.

GETtheMANUALS.org

SC005	SAVE CLUTCH PEDAL PROGRAMMING

NOTES	**Special notes:** The commands are found in the tool's repair mode, **Programming** button.

Run command **SC005 Backup clutch pedal programming** with the electronic parking brake computer which is faulty or to be replaced.
The pedals and the gearbox must not be operated during the backup procedure.
Carrying out this backup procedure before each replacement of the computer enables the old clutch pedal travel specifications to be re-entered into the new electronic parking brake computer.

Park the vehicle on a **level surface**.
– Select the diagnostic tool's **Repair mode** menu.
– From the tool's navigation menu, select **Programming**.
Run command **SC005 Backup clutch pedal programming**.

AFTER REPAIR	Repeat the conformity check from the start.

GETtheMANUALS.org

SC006	ENTER CLUTCH PEDAL PROGRAMMING

NOTES	**Special notes:** The commands are found in the tool's repair mode, **Programming** button.

Once the electronic parking brake computer has been changed.
Run command **SC006 Enter clutch pedal programming** after running command **SC005 Backup clutch pedal programming**.
Test braking and release, and starting the electronic parking brake computer when applied, to check conformity.

Park the vehicle on a **level surface**.
– Select the diagnostic tool's **Repair mode** menu.
– From the tool's navigation menu, select **Programming**.
– Run command **SC006 Enter clutch pedal programming**.

Note:
When a new electronic parking brake computer is initialised, the angle sensor is calibrated after running command **VP011 Computer calibration and initialisation**.

AFTER REPAIR	Repeat the conformity check from the start.

GETtheMANUALS.org

SC008	SLOPE INITIALISATION

NOTES	**Special notes:** The commands are found in the tool's repair mode, **Programming** button.

Using the diagnostic tool's automatic release sub-function screen, display parameter **PR003 Slope value**.
If the value displayed is not **0 d° ± 2** on level ground: run the command by following the procedure described below.

Park the vehicle on a **level surface**.
– Select the diagnostic tool's **Repair mode** menu.
– From the tool's navigation menu, select **Programming**.
– Run command **SC008 "Slope initialisation"**.
– Check the conformity of parameter **PR003 Slope value**.

Note:
When a new electronic parking brake computer is initialised, the angle sensor is calibrated after running command **VP011 Computer calibration and initialisation**.

AFTER REPAIR	Repeat the conformity check from the start.

GETtheMANUALS.org

NOTES	Only check the customer complaint after performing a complete check with the diagnostic tool.

NO DIALOGUE WITH THE COMPUTER	**ALP1**
WILL NOT RELEASE	**ALP2**
ASSISTED RELEASE TOO EARLY OR TOO LATE	**ALP3**
ASSISTED BRAKE APPLICATION PROBLEMS (when the engine stops)	**ALP4**
ELECTRONIC PARKING BRAKE MANUAL RELEASE IMPOSSIBLE	**ALP5**
RELEASE WITH THE EMERGENCY BRAKE IMPOSSIBLE	**ALP6**
ELECTRONIC PARKING BRAKE SEEMS TO BE APPLIED WHEN DRIVING	**ALP7**
ELECTRONIC PARKING BRAKE IS NOT APPLIED CORRECTLY ON A SLOPE	**ALP8**

GETtheMANUALS.org

ALP1	No dialogue with the computer

NOTES	None.

Try the diagnostic tool on another vehicle.

Check:
– the connection between the **diagnostic tool** and the diagnostic sensor (wiring in good condition),
– the connection between the diagnostic sensor and the diagnostic socket (lead in good condition),
– the engine and passenger compartment fuses.

Check for **+ 12 V battery** on **track 16**, and **+ 12 V after ignition feed** on **track 1** and an **earth** on **track 5** and on **track 4** of the diagnostic socket.
Repair if necessary.

Disconnect the automatic or electronic parking brake computer connector to check the **insulation, continuity and absence of interference resistance** on the following connections:
Automatic parking brake computer connector

track H4
(except Laguna II, Vel Satis and Espace IV) track G4 → **+ 12 V**

track H2
(except Laguna II, Vel Satis and Espace IV) track G2 → **earth**

track A4 → **track 7** of the diagnostic socket (K line)

Repair if necessary (see the vehicle wiring diagram).

AFTER REPAIR	Carry out a check using the **diagnostic tool**. Deal with any other faults.

GETtheMANUALS.org

ALP2	Will not release

NOTES	Only consult this customer complaint after a **full check using the diagnostic tool** (no present or stored faults). The main causes of the brake not releasing are: – Driver's door incorrectly closed (on vehicles with an automatic transmission). – Insufficient acceleration value. – Fault with gearbox switch. – Fault with door switch. – Pads stuck. – Incorrect multiplex line signals. If the manual release will not work, see ALP 4 **(see the wiring diagrams technical note for the vehicle concerned).**

Check that the force applied to the accelerator pedal is sufficient whether or not the vehicle is on a downward slope or not.

For a vehicle fitted with an automatic transmission, check that the door on the driver's side is not open or incorrectly closed.
Close the door again and go back through neutral if necessary.

Check that the interior lights have gone out.
Check that the door switch is working correctly:
Check the **insulation, continuity and the absence of interference resistance** on the following connections:
– connection code 87H
– connection code MA
Between the door switch, **component code 140** and the UCH, **component code 645.**
If there is a repair procedure (see **Technical Note 6015A, Repairing electrical wiring, Wiring: Precautions for repair**), repair the wiring, otherwise replace it.
Repair if necessary.

Check that the force applied to the accelerator pedal is sufficient and that the accelerator value is sufficient (refer to the conformity check) whether the vehicle is on a downward slope or not.

AFTER REPAIR	Carry out a check using the **diagnostic tool**. Deal with any other faults.

GETtheMANUALS.org

ALP2 CONTINUED 1	

For a vehicle fitted with an automatic gearbox:

Check the connection and condition of the automatic gearbox multifunction switch, component code **779**.
Check the connection and condition of the automatic gearbox computer, component code **119**.
If the connectors are faulty and if there is a repair procedure (see **Technical Note 6015A, Repairing electrical wiring, Wiring: Precautions for repair**) repair the connector(s); otherwise, replace the wiring.

Check **the insulation, continuity and the absence of interference resistance** of the following connections:
- **5DF** between components **779** and **119**,
- **5DG** between components **779** and **119**,
- **5DH** between components **779** and **119**,
- **5CF** between components **779** and **119**.

If the connection or connections are faulty and there is a repair procedure (see **Technical Note 6015A, Electrical wiring repair, Wiring: Precautions for repair**), repair the wiring, otherwise replace it.

For a vehicle fitted with a manual gearbox:

Check the connection and condition of the reversing lights sensor, component code **1109**.
Check the connection and condition of the Protection and Switching Unit, component code **1337** (Only for **Scénic II**), or the UCH, component code 645 (Only for **Vel Satis phase 1 and phase 2, Laguna II phase 2, Espace IV phase 1 and phase 2**).
If the connectors are faulty and if there is a repair procedure (see **Technical Note 6015A, Repairing electrical wiring, Wiring: Precautions for repair**) repair the connector(s); otherwise, replace the wiring.

Check the **insulation, continuity and the absence of interference resistance** of the following connection:
- **H66P** between components **1109** and **1337** (Only for **Scénic II**),
- **H66P** between components **1109** and **645** (Only for **Vel Satis phase 1 and phase 2, Laguna II phase 2, Espace IV phase 1 and phase 2**).

If the connection or connections are faulty and there is a repair procedure (see **Technical Note 6015A, Electrical wiring repair, Wiring: Precautions for repair**), repair the wiring, otherwise replace it.

AFTER REPAIR	Carry out a check using the **diagnostic tool**. Deal with any other faults.

GETtheMANUALS.org

ALP2 CONTINUED 2	

Carry out a multiplex network test (see **88B, Multiplexing**) and check for any potential incorrect multiplex line signals from the injection computer (see **13B, Diesel injection or 17B, Petrol injection**), the automatic gearbox computer (see **23A, Automatic gearbox**) the UCH computer (see **87B, Passenger compartment connection unit**) and the Protection and Switching Unit computer (see **87G, Engine compartment connection unit**).

Test the braking system:
Look for any areas where the brake pads may be sticking (due to ice, salt, etc.).
Check that the brake piston is operating correctly.
Repair if necessary.

If the fault is still present, contact the Techline.

AFTER REPAIR	Carry out a check using the **diagnostic tool**. Deal with any other faults.

GETtheMANUALS.org

ALP3	Assisted release too early or too late

NOTES	Only consult this customer complaint after a **full check using the diagnostic tool** (no present or stored faults). **(see the wiring diagrams technical note for the vehicle concerned).**

Assisted release may be activated too late if a trailer is attached to the vehicle.
Test assisted release without the trailer.

Test the braking system:
Look for any areas where the brake pads may be sticking (due to ice, salt, etc.).
Check that the brake piston is operating correctly.
Repair if necessary.

Check the clutch sensor positioning:

● **Espace IV and Vel Satis**

Check the **insulation, continuity and the absence of interference resistance** on the following connections:
– connection code 150K,
– connection code 150L,
– connection code 26X.
Between the electronic parking brake computer, **component code 1217** and the clutch position sensor, **component code 1057**.
If there is a repair procedure (**see Technical Note 6015A, Repairing electrical wiring, Wiring: Precautions for repair**), repair the wiring, otherwise replace the wiring.
Reposition it, if necessary.
Replace the clutch sensor if necessary (see **MR405 (Espace IV) or MR395 (Laguna II) or MR370 (Scénic), Mechanical, 37A, Mechanical component controls, Clutch pedal position sensor: Removal - Refitting or MR353 (Vel Satis ph 1), Mechanical, 37A, Mechanical component controls, Clutch pedal or MR402 (Vel Satis ph 2), Mechanical, 37A, Mechanical component controls, Clutch pedal switch: Removal - Refitting**).

● **Laguna II and Scénic II**

Check the **insulation, continuity and the absence of interference resistance** on the following connections:
– connection code 150Q,
– connection code 150L.
Between the electronic parking brake computer, **component code 1217** and the clutch pedal sensor, **component code 675** (see **section 87B, UCH, Door switch**).

1. Laguna II:

Check **the continuity and absence of interference resistance on the following connection**:
– connection code 86D
Between the injection computer, **component code 120** and the clutch pedal switch, **component code 675**.

AFTER REPAIR	Carry out a check using the **diagnostic tool**. Deal with any other faults.

GETtheMANUALS.org

ALP3 CONTINUED	

2. Scénic II:
Check **the continuity and absence of interference resistance on the following connection**:
– connection code H51.
Between the injection computer, **component code 120** and the clutch pedal switch, **component code 675**.
If there is a repair procedure (**see Technical Note 6015A, Repairing electrical wiring, Wiring: Precautions for repair**), repair the wiring, otherwise replace the wiring.
Reposition it, if necessary.
Replace the clutch sensor if necessary (see **MR405 (Espace IV) or MR395 (Laguna II) or MR370 (Scénic), Mechanical, 37A, Mechanical component controls, Clutch pedal position sensor: Removal - Refitting or MR353 (Vel Satis ph 1), Mechanical, 37A, Mechanical component controls, Clutch pedal or MR402 (Vel Satis ph 2), Mechanical, 37A, Mechanical component controls, Clutch pedal switch: Removal - Refitting**).

Reconfigure the vehicle clutch curve by applying the special command **SC006 Enter clutch pedal programming**.
Test the assisted brake release.

Check the condition of the clutch system (wear of the different components, possible build-up of grease on surfaces in friction).
Repair if necessary.
Carry out a multiplex network test (see **88B, Multiplexing**) and check for any potential faults on the injection computer (see **13B, Diesel injection or 17B, Petrol injection**), the automatic gearbox computer (see **23A, Automatic gearbox**) and the UCH computer (see **87B, Passenger compartment connection unit**).

If the fault is still present, contact the Techline.

AFTER REPAIR	Carry out a check using the **diagnostic tool**. Deal with any other faults.

GETtheMANUALS.org

ALP4	Assisted braking fault (when the engine is stopped)

NOTES	Only consult this customer complaint after a **full check using the diagnostic tool** (no present or stored faults). **(see the wiring diagrams technical note for the vehicle concerned).**

Check for any potential faults in the ABS computer (see **38C, Anti-lock braking system**), the UCH computer (see **87B, Passenger compartment connection unit**) and the injection computer (see **13B, Diesel injection or 17B, Petrol injection**) to ensure that they have actually received a request to stop the engine. Test the application of the electronic parking brake with the engine switched off.
Incorrect signal faults on the multiplex line. Run a multiplex network test (see **88B, Multiplex**).
When the engine stalls, the automatic brake application function is not active.
Check the **+ 12 V** supply, the **insulation, continuity and the absence of interference resistance** on the following connection: **– connection code BP2** Between the electronic parking brake computer, **component code 1217** and the battery, **component code 107**. If the continuity is correct, test the charging circuit (see **Technical Note 6014A, Checking the charging circuit**). Repair if necessary.
If the fault is still present, contact the Techline.

AFTER REPAIR	Carry out a check using the **diagnostic tool**. Deal with any other faults.

GETtheMANUALS.org

ALP5	**Impossible to manually release electronic parking brake**

NOTES	Only consult this customer complaint after a **full check using the diagnostic tool** (no present or stored faults). **(see the wiring diagrams technical note for the vehicle concerned).**

Check any incorrect signals on the multiplex line. Run a multiplex network test (see **88B, Multiplex**).
Check that the card is correctly inserted for a card reader, scenario 1 (not hands-free). If not, refer to the fault finding procedure for the UCH (see **87B, Passenger compartment connection unit**). Reposition it, if necessary.
Check that the steering column is unlocked.
Check the **+ 12 V** supply, the **insulation, continuity and the absence of interference resistance** on the following connection: **– connection code BP2** Between the electronic parking brake computer, **component code 1217** and the battery, **component code 107**. If the continuity is correct, test the charging circuit (see **Technical Note 6014A, Checking the charging circuit**). Repair if necessary.
Check the operation of the release switch. Check the continuity of the following connection codes: **– connection code 150P,** **– connection code 150N,** **– connection code 150B,** **– connection code 150G,** Between the control unit of the electronic parking brake lever, **component code 1216** and the electronic parking brake computer, **component code 1217**. Repair if necessary.
If the fault is still present, contact the Techline.

AFTER REPAIR	Carry out a check using the **diagnostic tool**. Deal with any other faults.

GETtheMANUALS.org

ALP6	**Impossible to release with the emergency brake**

NOTES	Only consult this customer complaint after a **full check using the diagnostic tool** (no present or stored faults).

Check that the electronic parking brake is not already released.
Check that the force is sufficient to release the emergency brake. Reduce the emergency brake cable voltage, if necessary.
If the fault is still present, contact the Techline.

AFTER REPAIR	Carry out a check using the **diagnostic tool**. Deal with any other faults.

GETtheMANUALS.org

ALP7	**The electronic parking brake seems to apply whilst driving**

NOTES	Only consult this customer complaint after a **full check using the diagnostic tool** (no present or stored faults).

Check that the engine has not stalled whilst driving.
Check that the electronic parking brake is actually released.
Check that the injection control system is not in defect mode (engine Limp Home). Run a multiplex network test (see **88B, Multiplex**). Check for any potential faults in the injection computer (see **13B, Diesel injection or 17B, Petrol injection**). If the fault is still present, contact the Techline.

AFTER REPAIR	Carry out a check using the **diagnostic tool**. Deal with any other faults.

GETtheMANUALS.org

ALP8	**The electronic parking brake does not apply correctly on a slope**

NOTES	Only consult this customer complaint after a **full check using the diagnostic tool** (no present or stored faults). **(see the wiring diagrams technical note for the vehicle concerned).**

Check that the vehicle is correctly gripping the ground.
Check that the vehicle is not outside the limits.
Check the **+ 12 V** supply, the **insulation, continuity and the absence of interference resistance** on the following connection: **– connection code BP2** Between the electronic parking brake computer, **component code 1217** and the battery, **component code 107**. If the continuity is correct, test the charging circuit (see **Technical Note 6014A, Checking the charging circuit**). Repair if necessary.
Check the condition of the brake pads (wear, fitting, insufficient running in, etc.). Replace if necessary.
Check the condition of the brake callipers. Repair if necessary.
Check the fitting of the pressure plate between the electronic parking brake and the brake calliper. Refit if necessary.
If the fault is still present, contact the Techline.

AFTER REPAIR	Carry out a check using the **diagnostic tool**. Deal with any other faults.

GETtheMANUALS.org

VEL SATIS

3 Chassis

38C ANTI-LOCK BRAKING SYSTEM

Fault finding - Introduction	38C - 1
Fault finding - Allocation of computer tracks	38C - 8
Fault finding - Summary table of faults	38C - 10
Fault finding - Conformity check	38C - 72
Fault finding - Help	38C - 73
Fault finding - Interpretation of statuses	38C - 76
Fault finding - Customer complaints	38C - 78
Fault finding - ALP	38C - 79

JANUARY 2006 **EDITION ANGLAISE**

"The repair procedures given by the manufacturer in this document are based on the technical specifications current when it was prepared.

The methods may be modified as a result of changes introduced by the manufacturer in the production of the various component units and accessories from which its vehicles are constructed."

All rights reserved by Renault s.a.s.

Copying or translating, in part or in full, of this document or use of the service part reference numbering system is forbidden without the prior written authority of Renault s.a.s.

© Renault s.a.s. 2006

ANTI-LOCK BRAKING SYSTEM
Fault finding - Introduction

GETtheMANUALS.org

1. SCOPE OF THIS DOCUMENT

This Technical Note **ABS/ESP MK60** should only be applied when performing fault finding on the affected vehicle.

Vehicle(s): ***Vel Satis Phase II*** *Function concerned:* ***MK60 ABS/ESP***	*Computer name:* ***MK60 ABS/ESP***

2. PREREQUISITES FOR FAULT FINDING

Documentation type

Fault finding procedure (this document):
– Assisted fault finding (integrated to diagnostic tool), Dialogys.

Wiring diagrams:
– Visu-Schéma (CD-ROM), paper.

Type of diagnostic tools

– **CLIP**

Special tooling required

Special tooling required
Multimeter

GETtheMANUALS.org

Faults

Faults are declared either present or stored (depending on whether they appeared in a certain situation and have disappeared since, or whether they remain but have not been diagnosed within the current context).

Consider the fault status, **present** or **stored** when the diagnostic tool is used after the + after ignition feed (without operating the system components).

For a **present fault**, apply the procedure described in the **Interpretation of faults** section.

For a **stored fault**, note the faults displayed and apply the **Notes** section.

If the fault is **confirmed** when the Notes are applied, the fault is present. Deal with the fault

If the fault is **not confirmed**, check:
- the electrical lines corresponding with the faulty part,
- the connectors on these lines (corrosion, bent pins, etc.),
- the resistance of the faulty component,
- the condition of the wires (melted or cut insulation, wear),
- or use the fault finding procedure to check the circuit of the faulty component.

Conformity check

The conformity check is designed to check the statuses and parameters which do not display any faults on the diagnostic tool when not operating consistently. Therefore, this phase allows us to:
- perform fault finding for faults that do not have a fault display, and which may correspond to a customer complaint.
- check that the system is operating correctly and that there is no risk of a fault reappearing after repairs.

This section gives the fault finding procedures for statuses and parameters and the conditions for checking them.

If a status is not behaving normally or a parameter is outside permitted tolerance values, you should consult the corresponding fault finding page.

Customer complaints - Fault finding chart

If the diagnostic tool check is correct, but the customer complaint is still present, the fault should be dealt with according to the **customer complaint**.

A summary of the overall procedure to follow is provided on the following page in the form of a flow chart.

GETtheMANUALS.org

4. FAULT FINDING PROCEDURE (continued)

Wiring check:

Fault finding problems:
Disconnecting the connectors and/or manipulating the wiring may temporarily clear the cause of a fault.
Electrical measurements of the voltage, resistance and insulation are generally correct, especially if the fault is not present when the measurements are being taken (stored fault).

Visual inspection:
Look for any damage under the bonnet and in the passenger compartment.
Carefully check the protective parts, insulators and wiring harness routing.
Look for signs of oxidation.

Touch inspection:
While manipulating the wiring, use the diagnostic tool to detect any changes in fault status from stored to present.
Make sure that the connectors are firmly secured.
Apply light pressure to the connectors,
Twist the wiring harness.
If there is a change in status, try to locate the source of the fault.

Inspection of each component:
Disconnect the connectors and check the appearance of the clips and tabs and their crimping (no crimping on the insulating section).
Make sure that the clips and tabs are properly locked in the sockets.
Check that no clips or tabs have been dislodged during connection.
Check the clip contact pressure using the appropriate type of tab.

Resistance check:
Check the continuity of the entire lines, then section by section. Look for a short circuit to earth, to the + 12 V feed or with another wire.

If a fault is detected, repair or replace the wiring harness.

GETtheMANUALS.org

4. FAULT FINDING PROCEDURE

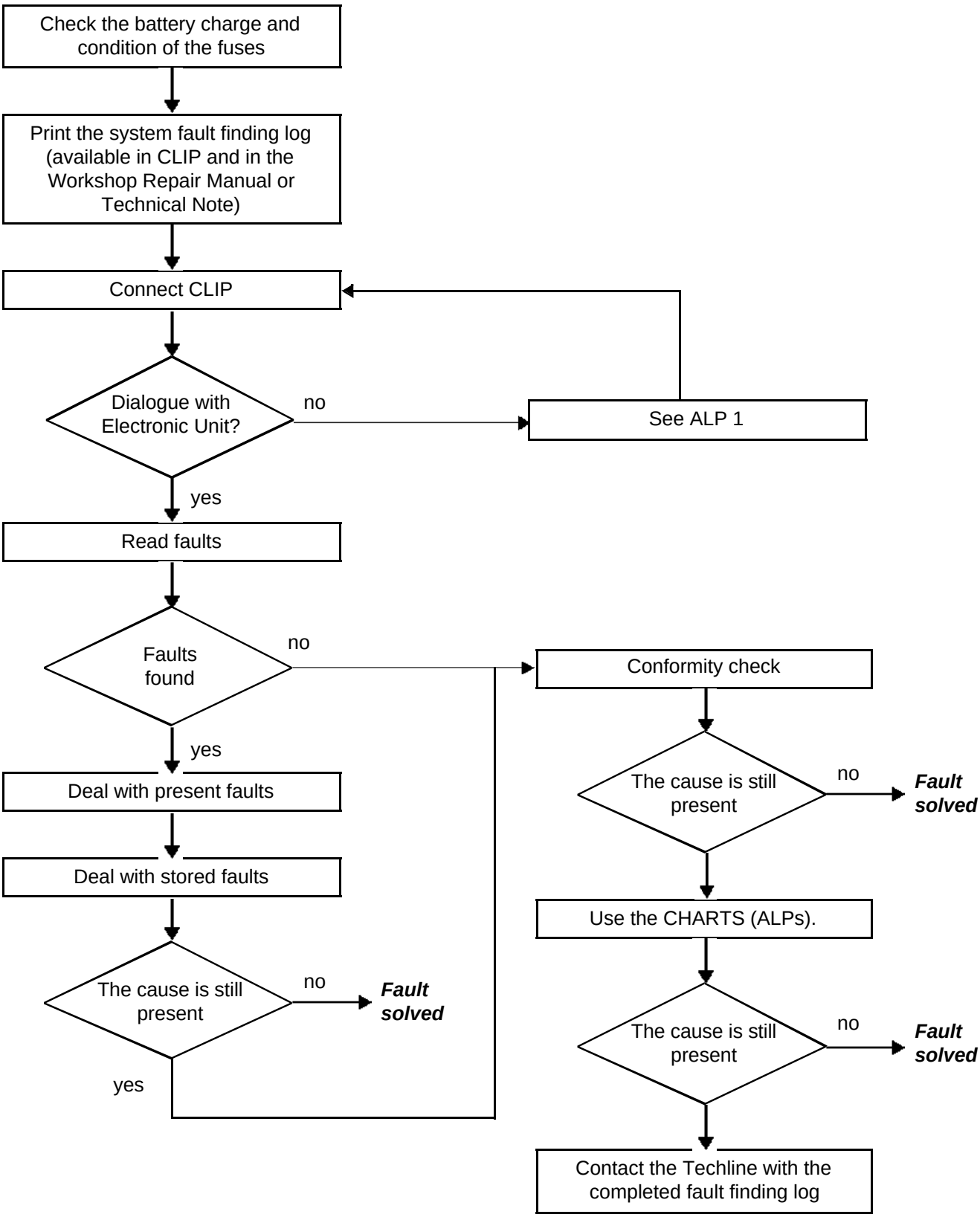

GETtheMANUALS.org

5. FAULT FINDING LOG

WARNING!

WARNING:
Any fault on a complex system call for thorough fault finding with the appropriate tools. The FAULT FINDING LOG, which should be completed during the fault finding procedure, ensures a record is kept of the procedure carried out. It is an essential component when consulting the manufacturer.

IT IS THEREFORE MANDATORY TO FILL OUT A FAULT FINDING LOG EACH TIME FAULT FINDING IS CARRIED OUT.

You will always be asked for this report:

- When requesting technical assistance from the Techline.
- For certification requests when replacing parts that must be certified.
- To be enclosed when returning monitored parts on request. The sheet is needed for warranty compensation, and enables better analysis of the removed parts.

6. SAFETY ADVICE

All work on components requires obeying safety rules to prevent damage or injury:

– Make sure that the battery is properly charged to avoid damaging the computers with a low load.

– Use the appropriate tools.

– **It is forbidden to carry out a road test while dialogue is still established between the diagnostic tool and the computer, as the ABS and Electric Braking Distribution (EBD) functions are deactivated. Braking pressure is identical on both vehicle axles (risk of a spin under heavy braking).**

GETtheMANUALS.org

FAULT FINDING LOG

System: anti-lock braking system and ESP (Electronic Stability program)

List of monitored parts: ***Computer***

Administrative identification

Date	2 0
Log completed by	
VIN	
Engine	
Diagnostic tool	CLIP
Update version	

Customer complaint

	1786	Anti-lock braking system not triggered		1787	Accidental triggering of anti-lock braking system		1790	Warning lights come on
	1788	ESP not triggered		1789	Accidental triggering of ESP			

Other — Please specify:

Conditions under which the customer complaint occurs

	004	Intermittently		005	While driving		011	When ignition is switched on
	009	Sudden fault						

Other — Please specify:

Documentation used in fault finding

Fault finding procedure used	
Type of diagnostic manual:	Workshop Repair Manual ❑ Technical Note ❑ Assisted fault finding ❑
Fault finding manual no.:	
Wiring diagram used	
Wiring Diagram Technical Note No.:	
Other documentation	
Title and/or part number:	

RENAULT

page to print or photocopy - page to print or photocopy - page to print or photocopy

GETtheMANUALS.org

FAULT FINDING LOG

System: anti-lock braking system and ESP (Electronic Stability program)

Computer identification and system parts exchanged

Part 1 part no.	
Part 2 part no.	
Part 3 part no.	
Part 4 part no.	
Part 5 part no.	

To be read with the Diagnostic tool (Identification screen):

Computer part no.	
Supplier no.	
Program no.	
Software version	
Calibration no.	
VDIAG	

Faults found with the diagnostic tool

Fault no.	Present	Stored	Fault name	Characterisation

Conditions under which fault occurs

Status or parameter no.	Parameter name	Value	Unit

System specific information

Description:

Additional information

What factors led you to replace the computer? What other parts were replaced?	
Other faulty functions?	
Please specify:	

RENAULT

FD 02
Fault finding log

GETtheMANUALS.org

47-TRACK CONNECTOR

Track	Allocation	Sensor/actuator tracks
1	Pump motor power supply	
2	K line	
3	Brake pedal travel sensor signal (A0, B0)	Track 3 brake pedal travel sensor
4	+ after ignition feed.	
5	Brake pedal travel sensor earth (A0, B0)	Track 2 brake pedal travel sensor
6	Transverse acceleration signal (B0) or cluster feed (C1, E0, E1)	Track 3 combined sensor
7	+ 5 V brake pedal travel sensor earth	Track 1 pedal travel sensor
8	Not used	
9	Not used	
10	Not used	
11	CAN H	
12	CAN H track to cruise control with distance limiter	
13	Relay control for turning off brake lights (C1)	
14	CAN L track to cruise control with distance limiter	
15	CAN L	
16	Earth	Track 4 servo microswitch
17	Brake servo solenoid valve feed (C1)	Track 3 brake pressure sensor
18	+ 5 V brake pressure sensor feed	Track 1 brake pressure sensor
19	Brake pressure sensor earth	Track 2 brake pressure sensor
20	Brake pressure sensor earth	
21	Not used	
22	Not used	
23	Not used	Track 5 combined sensor
24	Earth cluster sensor (C1, E0, E1)	
25	CAN L (only for ESP	
26	Not used	Track 1 servo microswitch
27	Brake servo microswitch signal normally open (C1)	Track 5 servo microswitch
28	Brake servo microswitch feedC1	
29	CAN L (only for ESP	Track 2 servo microswitch
30	Servo microswitch signal normally closed (C1)	Track 3 servo microswitch
31	Servo solenoid valve control (C1)	
32	Solenoid valve supply	Track 1 front right-hand wheel sensor
33	Front right-hand speed sensor earth	Track 2 front right-hand wheel sensor
34	Front right-hand speed sensor signal and feed	
35	Brake lights off (C1) or on(C1,E1) relay control	Track 2 rear left-hand wheel sensor
36	Rear left-hand speed sensor signal and feed	Track 1 rear left-hand wheel sensor
37	Rear left-hand sensor earth	
38	ASR/ESP disconnection input	
39	Vehicle speed wire connection	Track 1 yaw speed sensor
40	Yaw speed sensor signal (B0)	
41	Brake pedal close contact	Track 1 rear right-hand wheel sensor
42	Rear right-hand speed sensor earth	Track 2 rear right-hand wheel sensor
43	Rear right-hand speed sensor signal and feed	
44	Not used	Track 2 front left-hand wheel sensor
45	Front left-hand speed sensor signal and feed	Track 1 rear left-hand wheel sensor
46	Front left-hand speed sensor earth	
47	Earth	

GETtheMANUALS.org

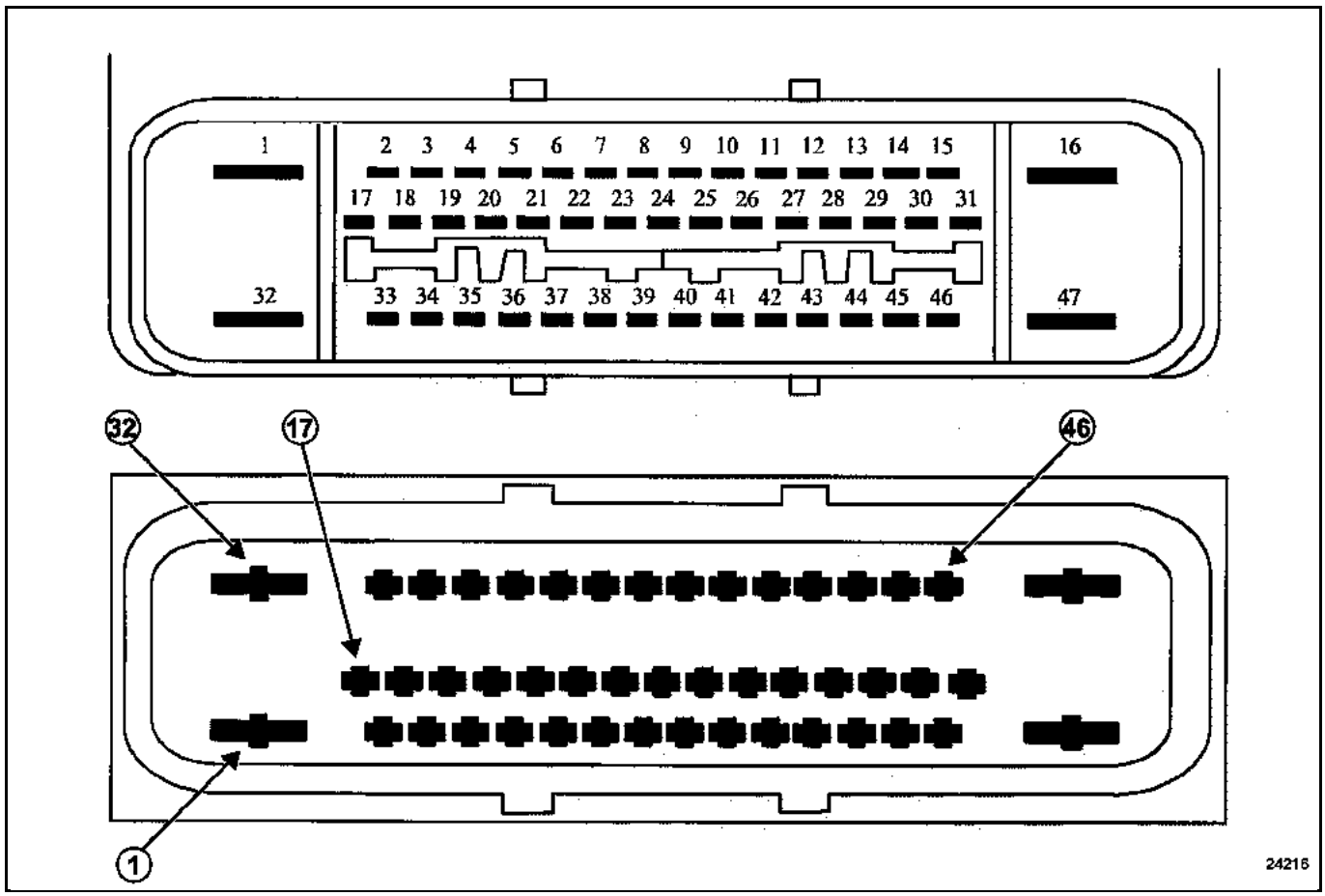

GETtheMANUALS.org

Tool fault	Associated DTC	Diagnostic tool title
DF006	5015	Front left-hand wheel speed sensor circuit
DF007	5035	Rear left-hand wheel speed sensor circuit
DF008	5016	Front left-hand wheel speed sensor signal
DF009	5036	Rear left-hand wheel speed sensor signal
DF010	50D3	Pump motor circuit
DF017	50C3	Computer
DF020	5140	Tachometric index programming
DF026	5005	Front right-hand wheel speed sensor circuit
DF027	5025	Rear right-hand wheel speed sensor circuit
DF028	5006	Front right-hand wheel speed sensor signal
DF029	5026	Rear right-hand wheel speed sensor signal
DF047	50E1	Multiplex network
DF056	50C6	Brake pedal switch consistency
DF066	50E2	No injection multiplex signal
DF075	5111	Steering wheel angle sensor signal
DF088	5120	Pressure sensor circuit
DF090	5041	Front right-hand wheel target
DF091	5042	Front left-hand wheel target
DF092	5043	Rear right-hand wheel target
DF093	5044	Rear left-hand wheel target
DF094	50C1	Computer supply voltage too high
DF095	50C0	Computer supply voltage too low
DF096	50CA	Computer internal electronic fault
DF097	50E3	No automatic gearbox multiplex signal
DF098	50E4	No UCH multiplex signal
DF099	50E7	ABS private multiplex network
DF100	50E8	No steering wheel angle multiplex signal

GETtheMANUALS.org

Tool fault	ASSOCIATED DTC	Diagnostic tool title
DF101	50E9	No combined sensor multiplex signal
DF102	5148	Save sensor calibrations.
DF103	50EA	No ACC multiplex signal
DF104	5100	Combined sensor internal electronic fault
DF107	5112	Steering wheel angle sensor identifier
DF108	5110	Steering wheel angle sensor
DF109	5122	Brake pressure sensor signal.
DF110	5123	Sensor feed
DF111	5130	Brake pedal travel sensor circuit
DF112	5133	Brake pedal travel consistency
DF114	5132	Brake servo microswitch circuit
DF115	5134	Brake servo microswitch status consistency.
DF116	5141	Vehicle configuration programming
DF117	5143	ABS/ESP calibration programming
DF118	5142	Vehicle options programming
DF119	5150	Gearbox type configuration
DF120	5151	Injection multiplex signal consistency
DF121	5153	Torque requested not available
DF122	5152	No injection multiplex signal
DF125	5108	Combined sensor supply
DF126	5109	Combined sensor signal plausibility
DF127	5135	Temperature sensor circuit
DF155	5107	Integrated chassis control function
DF171	5154	Adaptive cruise control
DF172	5155	Distance limiter deceleration control
DF173	5136	Brake servo solenoid valve
DF174	50D7	Distance limiter brake servo solenoid valve
DF176	5007	Front right-hand wheel speed sensor frequency
DF177	5017	Front left-hand wheel speed sensor frequency
DF178	5037	Rear left-hand wheel speed sensor frequency
DF179	5027	Rear right-hand wheel speed sensor frequency
DF185	5131	Brake servo solenoid valve circuit / internal supply

GETtheMANUALS.org

DF006 PRESENT OR STORED	FRONT LEFT-HAND WHEEL SPEED SENSOR CIRCUIT

NOTES	**Special notes:** None.
	Conditions for applying fault finding procedure to a stored fault: Apply the fault finding procedure described below in **DF006 stored**.

DF006 present	***NOTES***	**Special notes:** None.

Check the connection and condition of the sensor and the computer.
Disconnect the sensor and check that a voltage of approximately **12 V** is present **under + after ignition feed** at the sensor connector terminals on the computer side.
Is the voltage measured correct?

YES	Swap the two front wheel speed sensors over. Clear the computer memory. Switch off the ignition. Switch on the ignition again. If the fault initially declared **DF006 Front left-hand wheel speed sensor circuit** has become **DF026 Front right-hand wheel speed sensor circuit**, replace the wheel speed sensor. If the fault remains on the same side, the wiring between the computer and the sensor is faulty. Check and ensure the continuity of the following connections: Sensor connector **track 1** → **track 46** Computer connector Sensor connector **track 2** → **track 45** Computer connector Also check the insulation between these two connections.
NO	Check and ensure the continuity of the following connections: Sensor connector **track 1** → **track 46** Computer connector Sensor connector **track 2** → **track 45** Computer connector Also check the insulation between these two connections. Carry out a visual inspection of the sensor wiring. If all the checks are correct, contact your Techline.

AFTER REPAIR	Clear the computer memory. Carry out a road test followed by another check with the diagnostic tool.

GETtheMANUALS.org

DF006 CONTINUED	

DF006 stored	*NOTES*	**Special notes:** None.

Check the connection and condition of the sensor and the computer.
Swap the two front wheel speed sensors over.
Clear the computer memory.
Carry out a road test and then recheck with the diagnostic tool.

If the fault initially declared **DF006 Front left-hand wheel speed sensor circuit** has become **DF026 Front right-hand wheel speed sensor circuit**, replace the wheel speed sensor.

If the fault remains on the same side, the wiring between the computer and the sensor is faulty.

Check and ensure the continuity of the following connections:

Sensor connector **track 1** ⟶ **track 46** Computer connector
Sensor connector **track 2** ⟶ **track 45** Computer connector

Also check the insulation between these two connections.

AFTER REPAIR	Clear the computer memory. Carry out a road test followed by another check with the diagnostic tool.

GETtheMANUALS.org

DF007 PRESENT OR STORED	REAR LEFT-HAND WHEEL SPEED SENSOR CIRCUIT

NOTES	**Special notes:** None.
	Conditions for applying fault finding procedure to a stored fault: Apply the fault finding procedure described below in **DF007 stored**.

DF007 present	***NOTES***	**Special notes:** None.

Check the connection and condition of the sensor and the computer.
Disconnect the sensor and check that a voltage of approximately **12 V** is present **under + after ignition feed** at the sensor connector terminals on the computer side.

Is the voltage measured correct?

YES

Swap the two rear wheel speed sensors. Clear the computer memory.

Switch off the ignition. Switch on the ignition again.

If the fault initially declared **DF007 Rear left-hand wheel speed sensor circuit** has become **DF027 Rear right-hand wheel speed sensor circuit**, replace the wheel speed sensor.

If the fault remains on the same side, the wiring between the computer and the sensor is faulty.

Check and ensure the continuity of the following connections:

Sensor connector **track 1** → **track 37** Computer connector
Sensor connector **track 2** → **track 36** Computer connector

Also check the insulation between these two connections.

NO

Check and ensure the continuity of the following connections:

Sensor connector **track 1** → **track 37**Computer connector
Sensor connector **track 2** → **track 36** Computer connector

Also check the insulation between these two connections.

Carry out a visual inspection of the sensor wiring.

If all the checks are correct, contact your Techline.

AFTER REPAIR	Clear the computer memory. Carry out a road test followed by another check with the diagnostic tool.

GETtheMANUALS.org

DF007 CONTINUED	

DF007 stored	***NOTES***	Special notes: None.

Check the connection and condition of the sensor and the computer.
Swap the two rear wheel speed sensors.
Clear the computer memory.
Carry out a road test and then recheck with the diagnostic tool.

– If the fault initially declared **DF007 Rear left-hand wheel speed sensor circuit** has become **DF027 Rear right-hand wheel speed sensor circuit**, replace the wheel speed sensor.
– If the fault remains on the same side, the wiring between the computer and the sensor is faulty.

Check and ensure the continuity of the following connections:

Sensor connector **track 1** ⟶ **track 37** Computer connector
Sensor connector **track 2** ⟶ **track 36** Computer connector

Also check the insulation between these two connections.

AFTER REPAIR	Clear the computer memory. Carry out a road test followed by another check with the diagnostic tool.

GETtheMANUALS.org

DF008 STORED	FRONT LEFT-HAND WHEEL SPEED SENSOR SIGNAL

NOTES	**Priorities when dealing with a number of faults:** Deal with fault **DF006 Front left-hand wheel speed sensor circuit** first if it is present.
	Conditions for applying the fault finding procedure to stored faults: The fault is present during: road test (in excess of **12 mph (20 km/h)** for **2 minutes**).

Check that the wheel speed sensor mounting is in good condition (correct clipping).
Check the sensor / target air gap over one wheel revolution: **0.1 mm < front wheel air gap < 1.1 mm**.
Check the conformity of the target: condition, **number of teeth = 48** (using special command **SC001 Check target teeth**).

Check the connection and the condition of the sensor connectors.
Carry out a visual inspection of the sensor wiring and check the condition of the connections on the **47-track computer connector**.

If the results of the checks are correct, reconnect the computer and the wheel speed sensor and clear the computer memory.
Exit the fault finding procedure and carry out a road test. Replace the sensor if the fault recurs.

AFTER REPAIR	Clear the computer memory. Carry out a road test followed by another check with the diagnostic tool.

GETtheMANUALS.org

DF009 **STORED**	REAR LEFT-HAND WHEEL SPEED SENSOR SIGNAL

NOTES	**Priorities when dealing with a number of faults:** Deal with fault **DF001 Rear left-hand wheel speed sensor circuit** first if it is present.
	Conditions for applying the fault finding procedure to stored faults: The fault is present during: road test (in excess of **12 mph (20 km/h)** for **2 minutes**).

Check that the wheel speed sensor mounting is in good condition (correct clipping).
Check the sensor / target air gap over one wheel revolution: **0.3 mm < rear wheel air gap < 1.3 mm**.
Check the conformity of the target: condition, **number of teeth = 48** (using special command **SC001 Check target teeth**).

Check the connection and the condition of the sensor connectors.
Carry out a visual inspection of the sensor wiring and check the condition of the connections on the **47-track computer connector**.

If the results of the checks are correct, reconnect the computer and the wheel speed sensor and clear the computer memory.
Exit the fault finding procedure and carry out a road test. Replace the sensor if the fault recurs.

AFTER REPAIR	Clear the computer memory. Carry out a road test followed by another check with the diagnostic tool.

GETtheMANUALS.org

DF010 PRESENT OR STORED	PUMP MOTOR CIRCUIT

NOTES	**Conditions for applying the fault finding procedure to stored faults:** The fault is declared present after the pedal has been held down **+ AC016 Test pump motor actuator command**.

Check the **ABS earths** (tightening of the terminal on the earth bolt above the hydraulic assembly).
Check the continuity between the **ABS earth** and **tracks 47 and 16** of the computer connector.
Check the **+ before ignition feed** on **track 1** on the **47-track** connector. Check the condition and position of the **40A** fuse in the engine fuse box.

If the fault appears after the computer has been removed or replaced, remove the computer and check the condition and presence of the internal connections (2 tracks) across the hydraulic assembly.

If the fault recurs, replace the hydraulic assembly (mechanical locking of the pump, etc.).

AFTER REPAIR	Clear the computer memory. Carry out a road test followed by another check with the diagnostic tool.

GETtheMANUALS.org

DF017 PRESENT OR STORED	COMPUTER

NOTES	**Conditions for applying the fault finding procedure to stored faults:** Apply the fault finding procedure whether the fault is present or stored.

Check the connections on the **47-track connector** of the ABS computer.
Check that there are no traces of oxidisation.
If traces of oxidisation are found, you must replace the ABS wiring and the computer. If not, replace only the computer.

Clear the computer memory, exit the diagnostic and switch off the ignition.
Perform a new check using the diagnostic tool. If the fault is still present, contact your Techline.

AFTER REPAIR	Clear the computer memory. Carry out a road test followed by another check with the diagnostic tool.

GETtheMANUALS.org

DF020 PRESENT	TACHOMETRIC INDEX PROGRAMMING

NOTES	**Special notes:** None.

The TEVES MK60 ABS/ESP computer with the tachometry function transmits the vehicle speed signal to all subscribers using this signal (instrument panel, engine management, etc.).
This vehicle speed signal replaces the one supplied by the speed sensor located on the gearbox.
The ABS/ESP computer calculates the vehicle speed from the wheel speed and the tyre circumference.

The tyre circumference must be programmed into the memory of a new computer. This involves entering an "X" index using command VP007 Tachometric index on the diagnostic tool.

Once the index has been entered using the **VP007** command, clear the computer memory and then switch off the ignition. Use the parameter **PR030** to check that the index entered has been stored correctly.

If the fault is still present, contact your Techline.

AFTER REPAIR	Clear the computer memory. Carry out a road test followed by another check with the diagnostic tool.

GETtheMANUALS.org

DF026 PRESENT OR STORED	FRONT RIGHT-HAND WHEEL SPEED SENSOR CIRCUIT

NOTES	**Special notes:** None.
	Conditions for applying fault finding procedure to a stored fault: Apply the fault finding procedure described below in **DF026 stored**.

DF026 present	***NOTES***	**Special notes:** None.

Check the connection and condition of the sensor and computer connections.
Check the connector on the intermediary connections under the body on the front left-hand upper wing section (**R183**). Disconnect the sensor and check that a voltage of approximately **12 V** is present **under + after ignition feed** at the sensor connector terminals on the computer side.
Is the voltage measured correct?

YES

Swap the 2 front wheel speed sensors over. Clear the computer memory.

Switch off the ignition. Switch on the ignition again.

If the fault initially declared **DF026 Front right-hand wheel speed sensor circuit** has become **DF006 Front left-hand wheel speed sensor circuit**, replace the wheel speed sensor.

If the fault remains on the same side, the wiring between the computer and the sensor is faulty.

Check and ensure the continuity of the following connections:

Sensor connector **track 1** → **track 33** Computer connector
Sensor connector **track 2** → **track 34** Computer connector

If the connection is faulty:
Disconnect the intermediate **2-track R183** connector on the front left-hand upper wing section and check the condition of the connections.

Check and ensure the continuity of the connections between:

Sensor connector **track 1** → **track B** Intermediate connector
Sensor connector **track 2** → **track A** Intermediate connector

Also check the insulation between these connections.

Check and ensure the continuity of the connections between:

Sensor connector **track 33** → **track B** Intermediate connector
Sensor connector **track 34** → **track A** Intermediate connector

Also check the insulation between these connections.

AFTER REPAIR	Clear the computer memory. Carry out a road test followed by another check with the diagnostic tool.

GETtheMANUALS.org

DF026 CONTINUED 1	

NO

Check and ensure the continuity of the following connections:

Sensor connector **track 1** → **track 33** Computer connector
Sensor connector **track 2** → **track 34** Computer connector

If the connection is faulty:

Disconnect the intermediate **2-track R183** connector on the front left-hand upper wing section and check the condition of the connections.

Check and ensure the continuity of the connections between:

Sensor connector **track 1** → **track B** Intermediate connector
Sensor connector **track 2** → **track A** Intermediate connector

Also check the insulation between these connections.

Check and ensure the continuity of the connections between:

Sensor connector **track 33** → **track B** Intermediate connector
Sensor connector **track 34** → **track A** Intermediate connector

Also check the insulation between these connections.

Carry out a visual inspection of the sensor wiring.

If all the checks are correct, contact your Techline.

AFTER REPAIR	Clear the computer memory. Carry out a road test followed by another check with the diagnostic tool.

GETtheMANUALS.org

DF026 CONTINUED 2	

DF026 stored	*NOTES*	**Special notes:** None.

Check the connection and condition of the sensor and computer connections.
Check the connector on the intermediary connections under the body on the front left-hand upper wing section (**R183**).
Swap the two front wheel speed sensors over.
Clear the computer memory.
Carry out a road test and then recheck with the diagnostic tool.

If the fault initially declared **DF026 Front right-hand wheel speed sensor circuit** has become **DF006 Front left-hand wheel speed sensor circuit**, replace the wheel speed sensor.

If the fault remains on the same side, the wiring between the computer and the sensor is faulty.

Check and ensure the continuity of the following connections:

Sensor connector **track 1** ⟶ **track 33** Computer connector
Sensor connector **track 2** ⟶ **track 34** Computer connector

If the connection is faulty:

Disconnect the intermediate **2-track R183** connector on the front left-hand upper wing section and check the condition of the connections.

Check and ensure the continuity of the connections between:

Sensor connector **track 1** ⟶ **track B** Intermediate connector
Sensor connector **track 2** ⟶ **track A** Intermediate connector

Also check the insulation between these connections.

Check and ensure the continuity of the connections between:

Sensor connector **track 33** ⟶ **track B** Intermediate connector
Sensor connector **track 34** ⟶ **track A** Intermediate connector

Also check the insulation between these connections.

AFTER REPAIR	Clear the computer memory. Carry out a road test followed by another check with the diagnostic tool.

GETtheMANUALS.org

DF027 PRESENT OR STORED	REAR RIGHT-HAND WHEEL SPEED SENSOR CIRCUIT

NOTES	**Special notes:** None.
	Conditions for applying fault finding procedure to a stored fault: Apply the fault finding procedure described below in **DF027 stored**.

DF027 present	***NOTES***	**Special notes:** None.

Check the connection and condition of the sensor and the computer.
Disconnect the sensor and check that a voltage of approximately **12 V** is present **under + after ignition feed** at the sensor connector terminals on the computer side.
Is the voltage measured correct?

YES

Swap the two rear wheel speed sensors. Clear the computer memory.

Switch off the ignition. Switch on the ignition again.

If the fault initially declared **DF027 Rear right-hand wheel speed sensor circuit** has become **DF027 Rear left-hand wheel speed sensor circuit**, replace the wheel speed sensor.

If the fault remains on the same side, the wiring between the computer and the sensor is faulty.

Check and ensure the continuity of the following connections:

Sensor connector **track 1** → **track 42** Computer connector
Sensor connector **track 2** → **track 43** Computer connector

Also check the insulation between these two connections.

NO

Check and ensure the continuity of the following connections:

Sensor connector **track 1** → **track 42** Computer connector
Sensor connector **track 2** → **track 43** Computer connector

Also check the insulation between these two connections.

Carry out a visual inspection of the sensor wiring.

If all the checks are correct, contact your Techline.

AFTER REPAIR	Clear the computer memory. Carry out a road test followed by another check with the diagnostic tool.

GETtheMANUALS.org

DF027 CONTINUED	

DF027 stored	*NOTES*	**Special notes:** None.

Check the connection and condition of the sensor and computer connections.
Swap the two rear wheel speed sensors.
Clear the computer memory.
Carry out a road test and then recheck with the diagnostic tool.

If the fault initially declared **DF027 Rear right-hand wheel speed sensor circuit** has become **DF007 Rear left-hand wheel speed sensor circuit present**, replace the wheel speed sensor.

If the fault remains on the same side, the wiring between the computer and the sensor is faulty.

Check and ensure the continuity of the following connections:

Sensor connector **track 1** → **track 42** Computer connector
Sensor connector **track 2** → **track 43** Computer connector

Also check the insulation between these two connections.

AFTER REPAIR	Clear the computer memory. Carry out a road test followed by another check with the diagnostic tool.

GETtheMANUALS.org

DF028 **STORED**	FRONT RIGHT-HAND WHEEL SPEED SENSOR SIGNAL

NOTES	**Priorities when dealing with a number of faults:** Deal with fault **DF026 Front right-hand wheel speed sensor circuit** first if it is present.
	Conditions for applying the fault finding procedure to stored faults: The fault is present during: road test (in excess of **12 mph (20 km/h)** for **2 minutes**).

Check that the wheel speed sensor mounting is in good condition (correct clipping).
Check the sensor/target air gap over one wheel revolution: **0.1 mm < front wheel air gap < 1.1 mm**.
Check the conformity of the target: condition, **number of teeth = 48** (using special command **SC001 Check target teeth**).

Check the connection and the condition of the sensor connectors.
Check the connector on the intermediary connections under the body on the front left-hand upper wing section (**R183**).

Carry out a visual inspection of the sensor wiring and check the condition of the connection on the **47-track computer connector**.

If the results of the checks are correct, reconnect the computer and the wheel speed sensor and clear the computer memory.
Exit the fault finding procedure and carry out a road test. Replace the sensor if the fault recurs.

AFTER REPAIR	Clear the computer memory. Carry out a road test followed by another check with the diagnostic tool.

GETtheMANUALS.org

DF029 **STORED**	REAR RIGHT-HAND WHEEL SPEED SENSOR SIGNAL

NOTES	**Priorities when dealing with a number of faults:** Deal with fault **DF027 Rear right-hand wheel speed sensor circuit** first if it is present.
	Conditions for applying the fault finding procedure to stored faults: The fault is present during: road test (in excess of **12 mph (20 km/h)** for **2 minutes**).

Check that the wheel speed sensor mounting is in good condition (correct clipping).
Check the sensor/target air gap over one wheel revolution: **0.3 mm < rear wheel air gap < 1.3**
Check the conformity of the target: condition, **number of teeth = 48** (using special command **SC001 Check target teeth**).

Check the connection and the condition of the sensor connectors.
Carry out a visual inspection of the sensor wiring and check the condition of the connection on the **47-track computer connector**.

If the results of the checks are correct, reconnect the computer and the wheel speed sensor and clear the computer memory.
Exit the fault finding procedure and carry out a road test. Replace the sensor if the fault recurs.

AFTER REPAIR	Clear the computer memory. Carry out a road test followed by another check with the diagnostic tool.

GETtheMANUALS.org

DF047 PRESENT	MULTIPLEX NETWORK (bus off)

NOTES	**Special notes:** None.

Carry out the multiplex network test.

AFTER REPAIR	Clear the computer memory. Carry out a road test followed by another check with the diagnostic tool.

GETtheMANUALS.org

DF056 PRESENT OR STORED	BRAKE PEDAL CONTACT CONSISTENCY

NOTES	**Conditions for applying the fault finding procedure to stored faults:** The fault is recorded as present when: the brake pedal is depressed.

Depress the brake pedal observing the **ET017 BRAKE PEDAL** status.

Check that the pedal released and pedal depressed positions are registered.

YES	Apply the fault finding procedure described in the interpretation of the **ET017 BRAKE PEDAL** status.
NO	Check the two brake light bulbs and the earth of the rear light units (no earthing of **track 41** across the bulbs when the pedal is not depressed).

AFTER REPAIR	Clear the computer memory. Carry out a road test followed by another check with the diagnostic tool.

GETtheMANUALS.org

DF066 PRESENT	NO MULTIPLEX TRANSMISSION FROM INJECTION

NOTES	**Special notes:** None.

Carry out the multiplex network test.
If the fault is still present, contact your Techline.

AFTER REPAIR	Clear the computer memory. Carry out a road test followed by another check with the diagnostic tool.

GETtheMANUALS.org

DF075 **STORED**	STEERING WHEEL ANGLE SENSOR SIGNAL

NOTES	**Conditions for applying the fault finding procedure to stored faults:** The fault is recorded as present following: steering from lock to lock and road test.

After replacing a sensor, program the steering wheel angle sensor using the diagnostic tool by selecting the configuration **VP003 Steering wheel angle sensor**.

Ensure that the steering wheel angle sensor is correctly installed and positioned on the steering column.

(With the wheels straight, check that the yellow marker on the steering wheel angle sensor is visible in the centre of the window and check that the connector is correctly connected to the sensor and not to the inert mounting next to the sensor.)

Position the wheels straight and use a diagnostic tool in the parameter category to check that **PR033** is between **- 15° and + 15°**: if not, check that the yellow marker on the steering wheel angle sensor is visible in the centre of the window.

Program the steering wheel angle using the diagnostic tool by selecting the configuration **VP003 Steering wheel angle sensor**.

Exit the fault finding procedure and carry out a road test.
Replace the sensor if the fault recurs.

AFTER REPAIR	Clear the computer memory. Carry out a road test followed by another check with the diagnostic tool.

GETtheMANUALS.org

DF088 PRESENT	BRAKE PRESSURE SENSOR CIRCUIT

NOTES	**Special notes:** None.

Check the condition and correct connection of the brake pressure sensor.

Check the connection and the condition of the computer connectors.

Check and ensure the continuity of the following connections:

Sensor connector **track 1** → **track 19** Computer connector
Sensor connector **track 2** → **track 20** Computer connector
Sensor connector **track 3** → **track 18** Computer connector

Also check the insulation between these connections.

Carry out a visual inspection of the sensor wiring.

Disconnect the pressure sensor and check the presence of a voltage of approximately **5 V** under **+ after ignition feed** between **tracks 1 and 3** of the sensor connector (ignore any new faults caused by this inspection).

If the voltage is approximately **0 V**, contact your Techline.

If the results of the checks are correct, reconnect the computer and the brake pressure sensor and clear the computer memory.

Exit fault finding mode and switch off the ignition.

Switch the ignition on and replace the sensor if the fault recurs.

IMPORTANT

Whenever a brake pressure sensor is replaced, it is essential to calibrate the sensor using the diagnostic tool. Carry out the following operations.
– **Do not depress the brake pedal for the entire duration of the operation.**
– **Configure VP026 Pressure sensor using the diagnostic tool.**

AFTER REPAIR	Clear the computer memory. Carry out a road test followed by another check with the diagnostic tool.

GETtheMANUALS.org

DF090 **STORED**	FRONT RIGHT-HAND WHEEL TARGET

NOTES	**Conditions for applying the fault finding procedure to stored faults:** The fault is recorded as present during: road test.

Check that the sensor casing is absent when rotating.
Check that the wheel speed sensor mounting is in good condition (clipping).
Check the conformity of the targets: condition, **number of teeth = 48** (using special command **SC001 Check target teeth**).

If the checks reveal no faults, clear the fault memory.

Exit the fault finding procedure and carry out a road test.

Replace the instrumented bearing if the fault recurs.

AFTER REPAIR	Clear the computer memory. Carry out a road test followed by another check with the diagnostic tool.

GETtheMANUALS.org

DF091 **STORED**	FRONT LEFT-HAND WHEEL TARGET

NOTES	**Conditions for applying the fault finding procedure to stored faults:** The fault is recorded as present during: road test.

Check that the sensor casing is absent when rotating.
Check that the wheel speed sensors mounting is correct (clipping).
Check the conformity of the targets: condition, **number of teeth = 48** (using special command **SC001 Check target teeth**).

If the checks reveal no faults, clear the fault memory.

Exit the fault finding procedure and carry out a road test.

Replace the instrumented bearing if the fault recurs.

AFTER REPAIR	Clear the computer memory. Carry out a road test followed by another check with the diagnostic tool.

GETtheMANUALS.org

DF092 **STORED**	RIGHT-HAND REAR WHEEL TARGET

NOTES	**Conditions for applying the fault finding procedure to stored faults:** The fault is recorded as present after: road test.

Check that the sensor casing is absent when rotating.
Check that the wheel speed sensors mounting is correct (clipping).
Check the conformity of the targets: condition, **number of teeth = 48** (using special command **SC001 Check target teeth**).

If the checks reveal no faults, clear the fault memory.

Exit the fault finding procedure and carry out a road test.

Replace the instrumented bearing if the fault recurs.

AFTER REPAIR	Clear the computer memory. Carry out a road test followed by another check with the diagnostic tool.

GETtheMANUALS.org

DF093 **STORED**	LEFT-HAND REAR WHEEL TARGET

NOTES	**Conditions for applying the fault finding procedure to stored faults:** The fault is recorded as present during: road test.

Check that the sensor casing is absent when rotating.
Check that the wheel speed sensors mounting is correct (clipping).
Check the conformity of the targets: condition, **number of teeth = 48** (using special command **SC001 Check target teeth**).

If the checks reveal no faults, clear the fault memory.

Exit the fault finding procedure and carry out a road test.

Replace the instrumented bearing if the fault recurs.

AFTER REPAIR	Clear the computer memory. Carry out a road test followed by another check with the diagnostic tool.

GETtheMANUALS.org

DF094 / DF095 PRESENT OR STORED	COMPUTER SUPPLY VOLTAGE

NOTES	**Special notes:** Apply the fault finding procedure below, whether the fault is indicated as present or stored. This fault appears when the engine is started with a battery charger or a **24-volt** battery. The undervoltage fault is not stored unless the vehicle speed is above **12 mph (20 km/h)**.
	Conditions for applying the fault finding procedure to stored faults: Apply the fault finding procedure whether the fault is present or stored.

Check for the presence of **+ 12 before ignition feed** on **track 32** of the **47-track** computer connector.
Perform the operations necessary to obtain the correct **+ after ignition feed** voltage supply to the computer:

10 V < correct voltage < 17 V

– Battery charge check.
– Charging circuit check.
– Check the tightness and condition of the battery terminals.

Check the presence of **+ after ignition feed** on **track 4** of the **47-track** computer connector (**5A** fuse).
Check for the presence of **+ before ignition feed** on **track 1** and **32** of the **47-track** connector (fuses **30A** and **40A** located in the engine fuse box).
Check the earths are in good condition (properly tightened, not oxidised etc.), check the tightness of the terminal on the earth bolt located above the hydraulic power unit.

AFTER REPAIR	Clear the computer memory. Carry out a road test followed by another check with the diagnostic tool.

GETtheMANUALS.org

DF096 PRESENT	COMPUTER INTERNAL ELECTRICAL FAULT

NOTES	**Special notes:** None.

Using the diagnostic tool, check the **FUNCTION CODE NUMBER** (CLIP: identification screen and NXR: parameter screen **PR041**).

– If the **function code number is C1** (the system is fitted with electric emergency braking assistance), start the engine and use command **AC161 Brake servo solenoid valve**.

If **DF185 Brake servo / internal feed circuit** appears, apply the fault finding procedure associated with this fault.

If **DF185** does not appear, check with your Techline.

– If the **function code number is E0 or E1** (the system is fitted with manual emergency brake assist), contact your Techline.

AFTER REPAIR	Clear the computer memory. Carry out a road test followed by another check with the diagnostic tool.

GETtheMANUALS.org

DF097 PRESENT	NO AUTOMATIC GEARBOX MULTIPLEX SIGNAL

NOTES	**Special notes:** None.

Carry out the multiplex network test.
If the fault is still present, contact your Techline.

AFTER REPAIR	Clear the computer memory. Carry out a road test followed by another check with the diagnostic tool.

GETtheMANUALS.org

DF098 PRESENT	NO UCH MULTIPLEX SIGNAL

NOTES	**Special notes:** None.

Carry out the multiplex network test.
If the fault is still present, contact your Techline.

AFTER REPAIR	Clear the computer memory. Carry out a road test followed by another check with the diagnostic tool.

GETtheMANUALS.org

DF099 PRESENT	ABS PRIVATE MULTIPLEX NETWORK (bus off)

NOTES	**Special notes:** None.

Ensure that the connections and the position of any special equipment, such as CB, car phone, amplifier, etc. are not preventing the ABS from working correctly.

Using the diagnostic tool, check the **FUNCTION CODE NUMBER** (CLIP: identification screen and NXR: parameter screen PR041).

– **E0, C1, E1** indicates that the system is fitted with a combined sensor.

Check the connection and condition of the combined sensor connectors and the steering wheel angle sensor.

– Check the continuity and insulation of the connections between:

Computer connector **Track 29** → **Track 3** Steering wheel angle sensor + feed
→ **Track 2** combined sensor

Computer connector **Track 25** → **Track 2** Steering wheel angle sensor
→ **Track 1** Combined sensor

– If the fault is still present, switch off the ignition, disconnect the combined sensor, and then switch the ignition back on.
Replace the combined sensor if **DF099** is stored. Ignore any new faults that appear during the operation.

– If **DF099** remains present, switch off the ignition, reconnect the combined sensor and disconnect the steering wheel angle sensor. Switch ignition back on.
Replace the steering wheel angle sensor if **DF099** is stored. Ignore any new faults that appear during the operation.

If the checks are correct, contact your Techline.

AFTER REPAIR	Clear the computer memory. Carry out a road test followed by another check with the diagnostic tool.

GETtheMANUALS.org

DF100 PRESENT	NO STEERING WHEEL ANGLE MULTIPLEX SIGNAL

NOTES	**Special notes:** None.

Check the connection and condition of the steering wheel angle sensor and computer connectors.

Check the continuity of the following connections:

Computer connector **Track 25** → **Track 2** of the steering wheel angle sensor
Computer connector **Track 29** → **Track 3** of the steering wheel angle sensor

Check for the presence of **+ 12 before ignition feed** between **tracks 1 and 5** of the steering wheel angle sensor.

If the fault is still present, replace the steering wheel angle sensor.

AFTER REPAIR	Clear the computer memory. Carry out a road test followed by another check with the diagnostic tool.

GETtheMANUALS.org

DF101 PRESENT	NO COMBINED SENSOR MULTIPLEX SIGNAL

NOTES	**Special notes:** None.

Check the connection and condition of the combined sensor and computer connectors.
Carry out a visual inspection of the sensor wiring.

Check the continuity and the insulation of the connections between:

Sensor connector **track 1** → **track 25** computer connector
Sensor connector **track 2** → **track 29** computer connector
Sensor connector **track 3** → **track 6** computer connector
Sensor connector **track 5** → **track 24** computer connector

Also check the insulation between these connections.

Measure the voltage across **tracks 5 and 3** of the combined sensor connector under **+ after ignition feed**.
Replace the computer if the voltage is not approximately the same as the **+ after ignition feed**.

If the results of the checks are correct, reconnect the computer and the combined sensor and clear the computer memory.

Exit fault finding mode and switch off the ignition.

Switch the ignition on and replace the sensor if the fault recurs.

AFTER REPAIR	Clear the computer memory. Carry out a road test followed by another check with the diagnostic tool.

GETtheMANUALS.org

DF102 PRESENT	SAVE CALIBRATION (Computer configuration and sensor calibration)

NOTES	**Special notes:** None.

Using the diagnostic tool, run the following configuration commands:

– **CF077** ABS/ESP calibration.
Calibration is performed by selecting the engine type fitted to the vehicle.

– Adaptive cruise control:
Select command **CF078** on the diagnostic tool.

– Gearbox type:
Select command **CF079** on the diagnostic tool.

– Vehicle parameters (drive torque index configuration + brake type):
Select command **CF080** on the diagnostic tool.

– To program the steering wheel angle:
Select command **VP003** on the diagnostic tool.

– To program the tachometric index:
Select command **VP007** on the diagnostic tool.

If the calibration attempt fails, contact your Techline.

AFTER REPAIR	Clear the computer memory. Carry out a road test followed by another check with the diagnostic tool.

GETtheMANUALS.org

DF103 PRESENT	NO MULTIPLEX ACC SIGNAL

NOTES	**Special notes:** None.

Carry out the multiplex network test.

AFTER REPAIR	Clear the computer memory. Carry out a road test followed by another check with the diagnostic tool.

GETtheMANUALS.org

DF104 PRESENT	COMBINED SENSOR INTERNAL ELECTRICAL FAULT

NOTES	**Special notes:** None.

Replace the combined sensor.

IMPORTANT

Each time a combined pressure sensor is replaced, it is essential to calibrate the sensor using the diagnostic tool. Carry out the following operations.
– Position the vehicle on a flat, horizontal surface.
– Configure parameter VP025 Transverse acceleration sensor using the diagnostic tool.

AFTER REPAIR	Clear the computer memory. Carry out a road test followed by another check with the diagnostic tool.

GETtheMANUALS.org

DF107 PRESENT	STEERING WHEEL ANGLE SENSOR IDENTIFIER

NOTES	**Special notes:** None.

Program the steering wheel angle sensor using the diagnostic tool by selecting the configuration **VP003 Steering wheel angle sensor**.

If attempts to program fail, replace the steering wheel angle sensor.

AFTER REPAIR	Clear the computer memory. Carry out a road test followed by another check with the diagnostic tool.

GETtheMANUALS.org

DF108 PRESENT OR STORED	STEERING WHEEL ANGLE SENSOR

NOTES	**Special notes:** Ignore this fault if the vehicle is on the dynamometer or if a jack has been placed underneath the vehicle and has not had an effect on the steering wheel angle though it has generated a vehicle speed.
	Conditions for applying the fault finding procedure to stored faults: Apply the fault finding procedure whether the fault is present or stored.

Check the connection and condition of the steering wheel angle sensor and computer connectors.

Using the diagnostic tool, check the **FUNCTION CODE NUMBER** (CLIP: identification screen and NXR: parameter screen **PR041**).

If the function code number is E0, C1, E1:
– Check the continuity of the connections between:
Computer connector **Track 25** → **Track 2** steering wheel angle sensor
Computer connector **Track 29** → **Track 3** steering wheel angle sensor

Check the presence of **+ 12 after ignition feed** between **tracks 1 and 5** of the steering wheel angle sensor connector.

If the results of the checks are correct, reconnect the computer and the steering wheel angle sensor and clear the computer memory.
Exit the fault finding procedure and carry out a road test. Replace the sensor if the fault recurs.

AFTER REPAIR	Clear the computer memory. Carry out a road test followed by another check with the diagnostic tool.

GETtheMANUALS.org

DF109 PRESENT OR STORED	BRAKE PRESSURE SENSOR SIGNAL (consistency)

NOTES	**Special notes:** Deal with these faults first **DF088 Brake pressure sensor circuit** and **DF056 Brake pedal switch consistency**, if they are present.
	Conditions for applying the fault finding procedure to stored faults: Apply the fault finding procedure whether the fault is present or stored.

Ensure that there are no leaks in the hydraulic circuit.

When the engine is switched off, depress the brake pedal several times. After this has been performed, the pedal should remain hard.

If the pressure sensor has been removed or refitted, an air bubble may have become trapped in the pressure sensor thus altering the reading issued by the sensor. Remove the sensor and refill with brake fluid before refitting.

If the fault is still present, replace the brake pressure sensor.

If the checks reveal no faults, clear the computer memory.
Exit the fault finding procedure and carry out a road test.
Replace the sensor if the fault recurs.

AFTER REPAIR	Clear the computer memory. Carry out a road test followed by another check with the diagnostic tool.

GETtheMANUALS.org

DF110 PRESENT OR STORED	SENSOR SUPPLY (brake pressure sensor)

NOTES	**Special notes:** Check the **FUNCTION CODE NUMBER** (CLIP: identification screen and NXR: parameter screen **PR041**).
	Conditions for applying the fault finding procedure to stored faults: Apply the fault finding procedure whether the fault is present or stored.

If the function code number is: E0, C1, E1

Check the presence of **+ 5 Volts** under **after ignition feed** between **tracks 1 and 3** of the brake pressure sensor.

If the voltage is incorrect, check the wiring harness.

Ensure that the computer and the brake pressure sensor connectors are in good condition and correctly connected.
Check and ensure the continuity of the following connections:

Sensor connector track 1 → track 19 Computer connector
Sensor connector track 2 → track 20 computer connector
Sensor connector track 3 → track 18 computer connector

Also check the insulation between these connections.

If the checks show no faults, replace the brake pressure sensor.

Clear the computer memory and road test the vehicle then recheck with the diagnostic tool.

If the fault is still present, contact your Techline.

AFTER REPAIR	Clear the computer memory. Carry out a road test followed by another check with the diagnostic tool.

GETtheMANUALS.org

DF111 PRESENT	BRAKE PEDAL TRAVEL SENSOR CIRCUIT

NOTES	**Special notes:** Deal with fault **DF110 Sensor supply** first if it is present.

Check the condition and connection of the brake pedal travel sensor connector.

Check the connection and the condition of the computer connectors.
Check and ensure the continuity of the following connections:

Sensor connector **track 1** → **track 7** Computer connector
Sensor connector **track 2** → **track 5** Computer connector
Sensor connector **track 3** → **track 3** computer connector

Also check the insulation between these connections.

Carry out a visual inspection of the sensor wiring.

If the results of the checks are correct, reconnect the computer and the brake pedal travel sensor and clear the computer memory.
Carry out a road test and then recheck with the diagnostic tool.
Replace the sensor if the fault recurs.

AFTER REPAIR	Clear the computer memory. Carry out a road test followed by another check with the diagnostic tool.

GETtheMANUALS.org

DF112 **PRESENT**	BRAKE PEDAL TRAVEL CONSISTENCY

NOTES	**Special notes:** None.

Using the diagnostic tool, check on the statuses screen that **ET017** recognises the depressed and released positions of the brake pedal. If they are not detected, use the fault finding procedure for **ET017**.
Check the brake pedal position using **PR039** on the diagnostic tool. – Pedal released: **PR039** < 5.5 mm. If the value is different, replace the sensor.

AFTER REPAIR	Clear the computer memory. Carry out a road test followed by another check with the diagnostic tool.

GETtheMANUALS.org

DF114 PRESENT	BRAKE SERVO MICROSWITCH CIRCUIT

NOTES	**Special notes:** None.

Check the condition and connection of the brake servo connector.

Check the presence of **+ 12 Volts after ignition feed** on the disconnected brake servo connector between **track 5** and the vehicle **earth**.

If the voltage is incorrect, check the wiring loom.

Check the continuity and insulation of the connection between:

Servo connector **track 5** ⟶ **track 28** Computer connector

If the continuity and insulation have been checked and the voltage remains incorrect, replace the ABS/ESP computer.

Check that the computer connections and the **6 tracks** of the brake servo are correctly connected and in good condition.
Check and ensure the continuity of the following connections:

Servo connector **track 2** ⟶ **track 30** Computer connector
Servo connector **track 1** ⟶ **track 27** Computer connector

Also check the insulation between these connections.

If the results of the checks are correct, reconnect the computer and the brake servo and then clear the computer memory.
Replace the sensor if the fault recurs.

AFTER REPAIR	Clear the computer memory. Carry out a road test followed by another check with the diagnostic tool.

GETtheMANUALS.org

DF115 PRESENT	BRAKE SERVO MICROSWITCH STATUS CONSISTENCY

NOTES	**Special notes:** None.

Ensure that the brake switch is in correct working order by carrying out the **ET017** (interpretation of statuses) procedure.
Check the condition and connection of the brake servo connector. Check the continuity between **tracks 30 and 28** of the computer connector with the brake pedal released. Check the continuity between **tracks 27 and 28** of the computer connector with the brake pedal depressed.
Check the brake pedal position using **PR039** on the diagnostic tool. – Pedal released: **PR039** < 5.5 mm. If the value is different, replace the sensor.

AFTER REPAIR	Clear the computer memory. Carry out a road test followed by another check with the diagnostic tool.

GETtheMANUALS.org

DF116 PRESENT	VEHICLE CONFIGURATION PROGRAMMING

NOTES	**Special notes:** None.

Run the configuration command **CF080 Vehicle parameters** in order to define the engine type fitted to the vehicle.

If configuration attempts fail, contact your Techline.

AFTER REPAIR	Clear the computer memory. Carry out a road test followed by another check with the diagnostic tool.

GETtheMANUALS.org

DF117 PRESENT	ABS/ESP CALIBRATION PROGRAMMING

NOTES	**Special notes:** None.

Run the configuration command **CF077 ABS/ESP CALIBRATION**.

Calibration is performed by selecting the engine type fitted to the vehicle.

If the computer configuration fails, contact your Techline.

AFTER REPAIR	Clear the computer memory. Carry out a road test followed by another check with the diagnostic tool.

GETtheMANUALS.org

DF118 PRESENT	VEHICLE OPTIONS PROGRAMMING

NOTES	**Special notes:** None.

Run the configuration commands **CF078 Cruise control distance control** and **CF079 Gearbox type** to define the vehicle equipment.

If the computer configuration fails, contact your Techline.

AFTER REPAIR	Clear the computer memory. Carry out a road test followed by another check with the diagnostic tool.

GETtheMANUALS.org

DF119 PRESENT	GEARBOX TYPE CONFIGURATION (consistency between computer configuration and multiplex network frames)

NOTES	**Priorities when dealing with a number of faults:** Deal with fault **DF097 No automatic gearbox multiplex signal** if it is present.

Run the configuration command **CF079 Gearbox type** to reconfigure the gearbox type.

If the computer configuration fails, contact your Techline.

AFTER REPAIR	Clear the computer memory. Carry out a road test followed by another check with the diagnostic tool.

GETtheMANUALS.org

DF120 PRESENT OR STORED	INJECTION MULTIPLEX SIGNALS CONSISTENCY

NOTES	**Special note:** Although stored in the computer, this fault is caused by the injection system rather than ABS/ESP components. It is therefore necessary to perform fault finding on the injection. **Note:** The injection computer does not always store these transient faults as quickly as the ABS/ESP computer. If no fault is stored in the injection computer, start the engine; if there is no fault present, contact your Techline. Once the fault in the injection system has been remedied, clear the ABS/ESP computer memories. The injection multiplex signal is transmitted to the ABS/ESP computer via the Protection and Switching Unit.

Consult the fault finding procedure for the injection.
If the fault is still present, contact your Techline.

AFTER REPAIR	Clear the computer memory. Carry out a road test followed by another check with the diagnostic tool.

GETtheMANUALS.org

DF121 PRESENT OR STORED	TORQUE REQUESTED CANNOT BE SUPPLIED

NOTES	**Special note:** Although stored in the computer, this fault is caused by the injection system rather than ABS/ESP components. It is therefore necessary to perform fault finding on the injection. **Note:** The injection computer does not always store these transient faults as quickly as the ABS/ESP computer. If no fault is stored in the injection computer, start the engine; if there is no fault present, contact your Techline. Once the fault in the injection system has been remedied, clear the ABS/ESP computer memories. The injection multiplex signal is transmitted to the ABS/ESP computer via the Protection and Switching Unit.

Consult the fault finding procedure for the injection.
If the fault is still present, contact your Techline.

AFTER REPAIR	Clear the computer memory. Carry out a road test followed by another check with the diagnostic tool.

GETtheMANUALS.org

DF122 PRESENT OR STORED	NO INJECTION MULTIPLEX SIGNALS

NOTES	**Special note:** Although stored in the computer, this fault is caused by the injection system rather than ABS/ESP components. It is therefore necessary to perform fault finding on the injection. **Note:** The injection computer does not always store these transient faults as quickly as the ABS/ESP computer. If no fault is stored in the injection computer, start the engine; if there is no fault present, contact your Techline. Once the fault in the injection system has been remedied, clear the ABS/ESP computer memories. The injection multiplex signal is transmitted to the ABS/ESP computer via the Protection and Switching Unit.

Consult the fault finding procedure for the injection.
If the fault is still present, contact your Techline.

AFTER REPAIR	Clear the computer memory. Carry out a road test followed by another check with the diagnostic tool.

GETtheMANUALS.org

DF125 PRESENT	COMBINED SENSOR SUPPLY VOLTAGE

NOTES	**Priorities when dealing with a number of faults:** Deal with fault **DF094/095 Computer supply voltage** first if it is present.

Check the connection and condition of the combined sensor and computer connectors.

Switch the ignition on and check the presence of the + after ignition feed between **tracks 3 and 5** of the sensor connector.

If the voltage is correct, replace the combined sensor.

Check the continuity and insulation of the following connections:

Sensor connector **Track 3** → **Track 6** computer connector

Sensor connector **Track 5** → **Track 24** computer connector

Also check the insulation between these connections.

If these checks are correct, contact your Techline.

AFTER REPAIR	Clear the computer memory. Carry out a road test followed by another check with the diagnostic tool.

GETtheMANUALS.org

DF126 PRESENT OR STORED	COMBINED SENSOR SIGNAL PLAUSIBILITY

NOTES	**Conditions for applying the fault finding procedure to stored faults:** Apply the fault finding procedure whether the fault is present or stored.

Check that the combined sensor is fitted in the right direction, is in good condition and correctly tightened to **8 Nm** (the combined sensor is located under the central console between the gear lever and rear heater).

Check the connection and condition of the combined sensor connector.
Ensure that the connections, approval and position of any special equipment such as CB, car phone, amplifier, bass speaker (subwoofer type), etc. are not preventing the ABS from working correctly.

If the results of the checks are correct, reconnect the combined sensor and clear the computer memory.

Replace the combined sensor if the fault recurs.

AFTER REPAIR	Clear the computer memory. Carry out a road test followed by another check with the diagnostic tool.

GETtheMANUALS.org

DF127 PRESENT	TEMPERATURE SENSOR CIRCUIT

NOTES	**Special notes:** None.

Contact your Techline.

AFTER REPAIR	Clear the computer memory. Carry out a road test followed by another check with the diagnostic tool.

GETtheMANUALS.org

DF155 PRESENT	ELECTRONIC STABILITY PROGRAM FUNCTION

NOTES	**Special notes:** It is normal for this fault to occur after the vehicle has been driven on a race track (involving high transverse acceleration and without a steering angle value). Ensure that the fault does not occur after the vehicle has been driven at low speed.

Ensure that the transverse acceleration sensors/yaw angle or combined sensor are correctly fixed to the board and that the whole is fixed to the floor.

Check **PR033 Steering wheel angle** with the wheels straight.

Program the steering wheel angle sensor using the diagnostic tool by selecting the configuration **VP003 Wheel angle sensor**.
Replace the steering wheel angle sensor if the calibration has failed or if the angular value is not between **±15°**.

AFTER REPAIR	Clear the computer memory. Carry out a road test followed by another check with the diagnostic tool.

GETtheMANUALS.org

DF171 PRESENT OR STORED	ADAPTIVE CRUISE CONTROL

NOTES	**Conditions for applying the fault finding procedure to stored faults:** The fault is declared present when: a road test is carried out with the adaptive cruise control operational.

This fault appears when a multiplex connection fault arises between the ESP computer and the adaptive cruise control computer.

Apply the fault finding procedure for the multiplex network.

If the fault is still present, consult the fault finding procedure for the adaptive cruise control

AFTER REPAIR	Clear the computer memory. Carry out a road test with the adaptive cruise control operational then test it again with the diagnostic tool.

GETtheMANUALS.org

DF172 **PRESENT**	DISTANCE LIMITER DECELERATION CONTROL

NOTES	**Special notes:** None.

Apply the fault finding procedure for the multiplex network.

If the fault is still present, test the adative cruise control system using the diagnostic tool.

If the fault is still present, consult the fault finding procedure for the adaptive cruise control

AFTER REPAIR	Clear the computer memory. Carry out a road test with the adaptive cruise control operational then test it again with the diagnostic tool.

GETtheMANUALS.org

DF173 **STORED**	BRAKE SERVO SOLENOID VALVE

NOTES	**Conditions for applying the fault finding procedure to stored faults:** The fault is declared present when: the driver requests adaptive cruise control.

Check the condition and connection of the brake servo connector.

Check that the **47-track** computer connections and the **6 tracks** of the brake servo are correctly connected and in good condition.
Check and ensure the continuity of the following connections:

Servo connector **track 4** → **track 17** Computer connector
Servo connector **track 3** → **track 31** Computer connector

Also check the insulation between these connections.

Visually inspect the brake servo wiring.

Check the resistance of the brake servo **R = 2 Ω**. If the resistance is incorrect, replace the brake servo.

Check for the presence of approximately **+ 12 Volts after ignition feed** on the brake servo connector (connected) between **track 4** and **earth**.

If the voltage is incorrect, contact your Techline.

If the results of the checks are correct, reconnect the computer and the brake servo and then clear the computer memory.
If the fault is still present, consult the fault finding procedure for adaptive cruise control.
If the fault reappears, contact your Techline.

AFTER REPAIR	Clear the computer memory. Carry out a road test with the cruise control with distance limiter working then test it again with the diagnostic tool.

GETtheMANUALS.org

DF174 **STORED**	DISTANCE LIMITER BRAKE SERVO SOLENOID VALVE

NOTES	**Conditions for applying the fault finding procedure to stored faults:** The fault is declared present when: the driver requests adaptive cruise control.

Check the condition and connection of the brake servo connector.

Check that the **47-track** computer connections and the **6 tracks** of the brake servo are correctly connected and in good condition.
Check and ensure the continuity of the following connections:

Servo connector **track 4** → **track 17** Computer connector
Servo connector **track 3** → **track 31** Computer connector

Also check the insulation between these connections.

Visually inspect the brake servo wiring.

Check the resistance of the brake servo **R = 2 Ω**. If the resistance is incorrect, replace the brake servo.

Check for the presence of approximately **+ 12 Volts after ignition feed** on the brake servo connector (connected) between **track 4** and **earth**.

If the voltage is incorrect, contact your Techline.

If the results of the checks are correct, reconnect the computer and the brake servo and then clear the computer memory.
If the fault is still present, consult the fault finding procedure for adaptive cruise control.
If the fault reappears, contact your Techline.

AFTER REPAIR	Clear the computer memory. Carry out a road test with the adaptive cruise control operational and then test it again with the diagnostic tool.

GETtheMANUALS.org

DF176 **DF177** **DF178** **DF179** **STORED**	WHEEL SENSOR FREQUENCY

NOTES	**Priority in the event of a number of faults:** Deal with the wheel speed sensor circuit fault first, if there are two faults on a single sensor.
	Conditions for applying the fault finding procedure to stored faults: The fault is present during: road test (in excess of **12 mph (20 km/h) for 2 minutes**).

Check that the wheel speed sensor mounting is in good condition (correct clipping).
Check the sensor/target air gap over one wheel revolution: **0.1 mm < front wheel air gap < 1.1 mm**.
0.3 mm < rear wheel air gap < 1.3 mm.

Check the conformity of the target: condition, **number of teeth = 48** (using special command **SC001 Check target teeth**).

Check the connection and the condition of the sensor connectors.

Check the connector on the intermediary connections under the body on the front left-hand wing upper section (**R183**).

Carry out a visual inspection of the sensor wiring and check the condition of the connections on the **47-track computer connector**.

If the results of the checks are correct, reconnect the computer and the wheel speed sensor and clear the computer memory.
Exit the fault finding procedure and carry out a road test. Replace the sensor if the fault recurs.

AFTER REPAIR	Clear the computer memory. Carry out a road test over **12 mph (20 km/h)** for **2 minutes** then carry out a new test with the diagnostic tool.

GETtheMANUALS.org

DF185 PRESENT OR STORED	BRAKE SERVO SOLENOID VALVE CIRCUIT / INTERNAL SUPPLY

NOTES	**Special notes:** Check the **FUNCTION CODE NUMBER** (CLIP: identification screen and NXR: parameter screen PR041).
	Conditions for applying the fault finding procedure to stored faults: Apply the fault finding procedure whether the fault is present or stored.

If the function code number is: C1

Check the condition and connection of the brake servo connector.

Check that the computer connections and the 6 tracks of the brake servo are correctly connected and in good condition.
Check and ensure the continuity of the following connections:

- Servo connector **track 4** → **track 17** Computer connector
- Servo connector **track 3** → **track 31** Computer connector

Also check the insulation between these connections.

Visually inspect the brake servo wiring.

Check the resistance of the brake servo **R = 2 Ω**. If the resistance is incorrect, replace the brake servo.

Check the presence of **+ 12 Volts after ignition feed** on the brake servo connector between **track 4** and the **earth**.
If the voltage is incorrect, contact your Techline.

If the results of the checks are correct, reconnect the computer and the brake servo and then clear the computer memory.
Replace the brake servo if the fault recurs.

If the function code number is: E0 or E1

Contact your Techline.

AFTER REPAIR	Clear the computer memory. Carry out a road test followed by another check with the diagnostic tool.

GETtheMANUALS.org

NOTES	Only carry out conformity check after a full check using the diagnostic tool.

Order	Function	Parameter or status Check or action	Display and notes	Fault finding
1	Diagnostic tool dialogue	-	**ABS/ESP MK60**	**ALP 1**
2	Computer configuration	**PR030:** TACHOMETRIC INDEX	Check that the index entered corresponds to the tyres fitted to the vehicle (refer to the Help section)	None
3	Detection that brake pedal is not depressed	**ET017:** BRAKE PEDAL	Released status confirmed, brake pedal not depressed	**ET017**
4	Detection that brake pedal is depressed	**ET017:** BRAKE PEDAL	Depressed status confirmed; brake pedal fully depressed	**ET017**
5	Detection of Electronic Stability Program activation	**ET023:** ESP start/stop button	Depressed status confirmed when button is pressed	**ET023**
6	Detection of Electronic Stability Program activation	**ET023:** ESP start/stop button	Released status confirmed when button is released	**ET023**

GETtheMANUALS.org

Use of command modes:

Before using the command modes, check that the battery charge is sufficient

Control of the wheel solenoid valves in order to check the hydraulic system:

Raise the vehicle in order to be able to rotate the wheels, and check that they rotate freely.
Keep the brake pedal depressed to prevent the wheel being tested from being turned by hand (do not brake so firmly that full brake power is reached).

Select and confirm the command of the wheel being examined (Front left-hand wheel solenoid valves, etc.)

⟶ Turn the wheel in question by hand; five locking/unlocking cycles should be detected.

Pump motor control:

Select the Test pump motor command.

⟶ Confirm motor operation for 5 seconds

Bleeding the hydraulic circuits:

Apply the procedure described in the Bleeding the circuits section of the repair procedure Technical Note.

Summary of the FUNCTION CODES:

- **C1:** Electronic ABS + EBA + ESP for ACC + CLUSTER + UNDER-STEERING CONTROL
- **E0:** Mechanical ABS + EBA + ESP + CLUSTER
- **E1:** Mechanical ABS + EBA + ESP + CLUSTER + UNDER-STEERING CONTROL

Electrical EBA: System equipped with electrical emergency brake assist.

Mechanical EBA: System equipped with mechanical emergency brake assist.

ESP: Electronic Stability Program.

CLUSTER (combined sensor): a single sensor combining the yaw sensor and transverse acceleration sensor functions.

ACC: Adaptive cruise control.

CSV: Under-steer control.

What is the difference between an ABS/ESP system with mechanical EBA or electrical EBA?

Electrical EBA has extra components which do not feature in mechanical EBA, such as:
- A brake light cut-off relay.
- A brake servo solenoid valve.
- A brake potentiometer (brake pedal travel).

Depending on the function code, certain statuses or parameters on the diagnostic tool will not function.

GETtheMANUALS.org

REPLACING THE COMPUTER:

After replacing a computer, configure as follows:

– **tachometric index configuration.**

The TEVES MK60 ABS computer with the tachometry function supplies the vehicle speed signal to all subscribers in the vehicle using this information (instrument panel, engine management, etc.).
This vehicle speed signal replaces the one supplied by the speed sensor located on the gearbox.
The ABS computer calculates the vehicle speed from the speed of the wheels and the circumference of the tyres fitted on the vehicle.

The tyre circumference must be programmed into the memory of a new computer. This involves entering an "X" index using command VP007 Tachometric index on the diagnostic tool.

Once the index has been entered using the **VP007** command, clear the computer memory and then switch off the ignition. Use the **PR030** parameter to check that the index has been stored correctly.

– ABS/ESP calibration:

Select command **CF077** on the diagnostic tool.

– Adaptive cruise control:

Select command **CF078** on the diagnostic tool.

– Gearbox type:

Select command **CF079** on the diagnostic tool.

– Vehicle parameters (drive torque index configuration + brake type):

Select command **CF080** on the diagnostic tool.

– To program the steering wheel angle:

Select command **VP003** on the diagnostic tool.

GETtheMANUALS.org

BRAKE LIGHT COATED WIRING CONNECTED TO UNDERSTEER CONTROL (E1, C1 FUNCTION CODE) + LIGHTING SWITCH OFF in adaptive cruise control function (C1 FUNCTION CODE).

The **function code** is available on the **PARAMETERS (PR041)** screen or the **IDENTIFICATION** screen on the diagnostic tool.

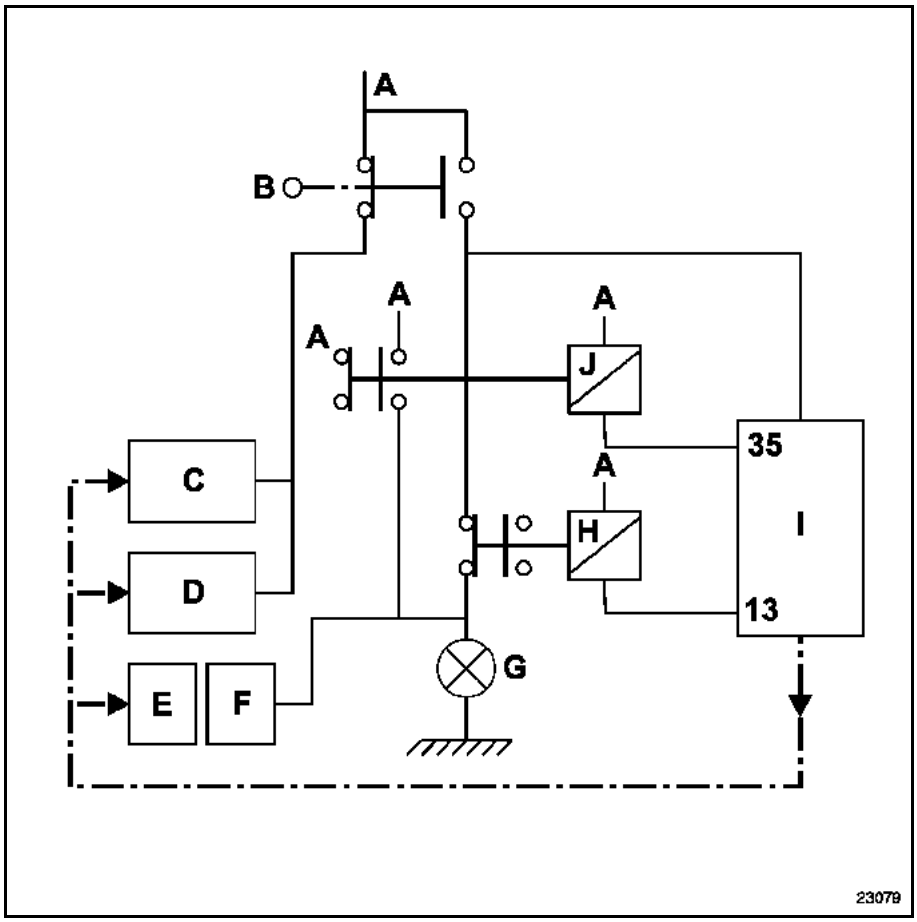

- **A + after ignition feed.**
- **B Brake lights switch.**
- **C Injection computer.**
- **D Automatic transmission computer.**
- **E UCH.**
- **F Passenger compartment relay and fuse box.**
- **G Brake lights.**
- **H Lights off relay.**
- **I ABS / ESP computer.**
- **J Ignition relay.**
- **Track 35 of the 35-track ABS/ESP computer connector.**
- **Track 13 of the 13-track ABS/ESP computer (not connected if mechanical EBA).**

GETtheMANUALS.org

ET017	BRAKE PEDAL

NOTES	**Special notes:** Only perform the checks if the depressed and released statuses are not consistent with the position of the pedal. Refer to the diagrams in the **Help** section.

STATUS Released brake pedal depressed.

If brake lights operate:

– Check the continuity of the connection between **track A3** of the brake light switch connector and **track 41** of the computer connector.

If the brake lights do not operate:

– Check the condition and fitting of the brake light switch and brake lights fuse.
– Check that there is **+ after ignition feed** on **tracks A1 and B1** of the brake switch connector.
– Remove the brake light switch and check that it is operating correctly:

	Continuity between tracks	Insulation between tracks
Switch depressed (Brake pedal released)	**A1 and B3**	**A3 and B1**
Switch released (Brake pedal depressed)	**A3 and B1**	**A1 and B3**

– Replace the switch if necessary. Check the continuity of the connection between **track A3** of the brake light switch connector and **track 41** of the computer connector.
– Check the condition and ensure the continuity of the connection between **track A3** of the brake switch connector and the brake lights.

Depressed STATUS brake pedal released.

– Check the condition and fitting of the brake light switch and brake lights fuse.
– Remove the brake light switch and check that it is operating correctly:

	Continuity between tracks	Insulation between tracks
Switch depressed (Brake pedal released)	**A1 and B3**	**A3 and B1**
Switch released (Brake pedal depressed)	**A3 and B1**	**A1 and B3**

– Replace the switch if necessary.
– Check the insulation against **12 V** of the connection between **track A3** of the brake switch connector and **track 41** of the computer connector.
– If the switch works correctly and **PR041** is **E1** or **C1**, check that the ignition relay is working (contact sticking, permanent command. Check if the status works normally when the relay is removed).

AFTER REPAIR	Carry out a road test and then a test with the diagnostic tool.

GETtheMANUALS.org

ET023	ESP start/stop button

NOTES	**Special notes:** Only perform the checks if the pressed and released statuses are not consistent with the position of the button.

STATUS Button released

Ensure that the ESP on/off switch connector is in good condition and correctly connected.

Repair if necessary.

Check there is no continuity between **tracks A2 and B1** in the released position of the switch. If there is continuity, replace the switch.

Check the insulation against earth of the connection between:

Switch connector **Track B1** ⟶ **Track 38** computer connector

STATUS Button pressed

Ensure that the ESP on/off switch connector is in good condition and correctly connected.
Repair if necessary.

Check that there is continuity between **tracks A2 and B1** in the pressed position of the switch. If there is no continuity, replace the switch.

Check that there is earth on **track A2** of the switch connector.

AFTER REPAIR	Carry out a road test and then a test with the diagnostic tool.

ANTI-LOCK BRAKING SYSTEM
Fault finding - Customer complaints

GETtheMANUALS.org

NOTES	Only consult the customer complaints section after a complete check using the diagnostic tool.

FAULTS DETECTED ON BRAKING WITH ABS/BRAKING REGULATION

- **Locking of one or more wheels.** — **ALP 2**
- **Pulling.** — **ALP 3**
- **Drift.** — **ALP 4**
- **Unexpected ABS operation at low speed with light pedal pressure.** — **ALP 5**
- **Unexpected ABS operation on poor road surfaces.** — **ALP 6**
- **Unexpected ABS operation with use of accessories (car phone, CB etc.)** — **ALP 7**
- **Extension of brake pedal travel following ABS regulation (with an irregular pedal when entering ABS regulation).** — **ALP 8**
- **Spongy pedal.** — **ALP 9**
- **Brake pedal vibration.** — **ALP 10**
- **Noises from the pump, the pipes or the hydraulic unit.** — **ALP 11**

OTHER CASES

- **No dialogue with the ABS computer.** — **ALP 1**
- **Brake lights do not light up go out (E1/C1 function code)** — **ALP 12**

GETtheMANUALS.org

ALP 1	No dialogue with the ABS computer

NOTES	None

Try to establish dialogue with a computer on another vehicle to make sure that the diagnostic tool is not faulty.
If the tool is not causing the fault and dialogue cannot be established with any other computer on the same vehicle, it may be that a faulty computer is disrupting the **K** diagnostic line.
Proceed by successive disconnections to locate this computer.
Check the voltage of the battery and perform the operations necessary to obtain a voltage which conforms to specification (**9.5 Volts** < battery voltage < **17.5 Volts**).

Check that the ABS fuses on the passenger compartment fuse board (**5A**) and two in the engine compartment (**30A and 40A**) are present and sound.
Check that the computer connector is properly connected and check the condition of its connections.
Check the ABS earths (good quality, not oxidised, sheath sealing ring (on the earth terminal), tightness of the earth bolt located above the ABS assembly).
Check that the computer is correctly supplied:

- **Earth on tracks 16 and 47** of the **47-track connector**
- **+ before ignition feed on tracks 1 and 32** of the **47-track** connector.
- **+ after ignition feed on track 4** of the **47-track** connector.

Check that the power supply to the diagnostic socket is correct:

- **+ before ignition on track 16**.
- **+ after ignition on track 1**
- **Earth on track 5**.

Check the continuity and insulation of the connection between:

Computer connector **track 2** ⟶ **track 7** diagnostic socket.

Contact your Techline if dialogue has still not been established after these various checks.

AFTER REPAIR	Clear the computer memory. Carry out a road test followed by another check with the diagnostic tool.

GETtheMANUALS.org

ALP 2	Locking of one or more wheels

NOTES	Only consult this customer complaint after a complete check using the diagnostic tool.

Reminder: The wheels locking on a vehicle fitted with ABS, or the tyres grating, which feels like locking to the customer, may be linked to normal operation of the system and should not always be considered as a fault:
- Locking is allowed below **4 mph (6 km/h)** (the system will not provide regulation).
- Braking with ABS intervention on very poor roads (significant squealing).

However, if the wheels are actually locking, lift the vehicle in order to be able to turn the wheels and check:

- Possible inversion of the speed sensor connection.
  Using parameters **PR001, PR002, PR003 and PR004**, rotate the wheels slowly and check the consistency of the results obtained.
  If the value measured is zero, rotate the other wheels to confirm an electrical inversion of the sensors and repair the wiring harness.

- Possible inversion of pipes on the hydraulic unit.
  Use the Front left-hand wheel solenoid valves, Front right-hand wheel solenoid valves, Rear left-hand wheel solenoid valves and Rear right-hand wheel solenoid valves commands while depressing the brake pedal and check for the occurrence of ten locking/unlocking cycles on the relevant wheel (see the Help section). If the ten cycles do not occur on the wheel tested, (wheel remains locked), see if they occur on another wheel (if a bad connection is confirmed: repair).
  If the ten cycles do not occur on a wheel and the pipes are correctly connected, replace the hydraulic unit.

Check that the sensor casing is secured when rotating.
Check that the wheel speed sensors mounting is correct (clipping).
Check the conformity of the targets: condition, **number of teeth = 48 (using the SC001 Check target teeth command)**.

If the fault is still present following these checks, replace the hydraulic unit.

AFTER REPAIR	Carry out a road test followed by a diagnostic tool check.

GETtheMANUALS.org

ALP 3	**Pull**

NOTES	Only consult this customer complaint after a complete check using the diagnostic tool.

Disconnect one wheel speed sensor.
Start the engine and ensure that only the ABS fault warning light comes on. Do not drive the vehicle if the brake fault warning light also lights up, as the brake limiter function is no longer guaranteed.
Carry out a road test with the ABS deactivated.

Is the fault still present under these conditions?

yes →

If the brake pedal travel is relatively long, bleed the brake circuit.
If the travel is normal, check the tyre pressures, the front axle, or for any leaks in the circuit.

no ↓

Raise the vehicle so that you can rotate the wheels and check:

– Possible inversion of the speed sensor connection.
– Possible inversion of pipes on the hydraulic unit.
To perform these tests, refer to and apply the procedures defined in **ALP 2**.
Check the condition of the ABS targets and that they conform to specifications.
Also check the sensor/target air gap by rotating each front and rear wheel one revolution.
If the fault is still present, replace the hydraulic unit.

AFTER REPAIR	Carry out a road test followed by a diagnostic tool check.

GETtheMANUALS.org

ALP 4	Wandering

NOTES	Only consult this customer complaint after a complete check using the diagnostic tool.

Disconnect one wheel speed sensor.
Start the engine and ensure that only the ABS fault warning light comes on. Do not drive the vehicle if the brake fault warning light also lights up, as the brake limiter function is no longer guaranteed.
Carry out a road test with the ABS deactivated.

Is the fault still present under these conditions?

yes →

Road handling fault not connected with the ABS.
Check the condition of the brake linings and that they are to specification and check the tyre pressures, the front axle, etc.

no ↓

Normal behaviour linked to the system operation during the intervention phase, mainly on surfaces with uneven grip or which are poorly laid.

AFTER REPAIR	Carry out a road test followed by a diagnostic tool check.

GETtheMANUALS.org

ALP 5	**Unexpected ABS operation at low speed and with light pedal pressure**

NOTES	Only consult this customer complaint after a complete check using the diagnostic tool. Warning: ABS regulation may be unresponsive when vehicle is driven on surfaces such as icy roads, cobbled streets, etc.

Brake pedal vibrations may be felt which are connected to the reactions of the system in particular situations:
- Crossing speed bumps.
- Tight cornering with lifting of the inside rear wheel.

These vibrations may be linked to simple brake limiter activation, when the pressure on the rear axle is limited.

If the fault is different, check the speed sensor connectors (micro-breaks) as well as the targets.

AFTER REPAIR	Carry out a road test followed by a diagnostic tool check.

GETtheMANUALS.org

ALP 6	**Unexpected ABS system intervention on a poor road surface**

NOTES	Only consult this customer complaint after a complete check using the diagnostic tool.

On poor road surfaces it is normal to feel bucking and vibration of the pedal as well as more significant tyre squealing than on good surfaces.
This gives the impression of a variation in efficiency, but this should be considered normal.

AFTER REPAIR	Carry out a road test followed by a diagnostic tool check.

GETtheMANUALS.org

ALP 7	**Unexpected ABS operation with use of accessories** (car phone, CB, etc.)

NOTES	Only consult this customer complaint after a complete check using the diagnostic tool.

Check that the equipment which is causing the fault is approved.
Check that the equipment has been correctly installed with no alteration to the original wiring, in particular that of the ABS (unauthorised connections to earth and **+ after ignition feed/before ignition feed** of the ABS).

AFTER REPAIR	Carry out a road test followed by a diagnostic tool check.

GETtheMANUALS.org

ALP 8	**Extension of brake pedal travel following regulation** (with an irregular pedal when entering regulation).

NOTES	Only consult this customer complaint after a complete check using the diagnostic tool.

Air transit from the hydraulic unit regulation channels to the brake circuits.
Bleed the circuits in accordance with the procedure recommended in the Workshop Repair Manual (use the command modes on the diagnostic tool).
Following the operation, carry out a road test with ABS regulation.

If the fault is still present, perform the above operation once or twice more.
If the customer complaint is particularly serious, and bleeding the circuit does not improve matters, replace the hydraulic unit.

AFTER REPAIR	Carry out a road test followed by a diagnostic tool check.

GETtheMANUALS.org

ALP 9	**Spongy pedal.**

NOTES	Only consult this customer complaint after a complete check using the diagnostic tool.

Air in the brake circuits.
Bleed the circuits in the conventional way starting with the rear right-hand brake, followed by rear left, front left and finally front right. **Repeat the operation if necessary.**

AFTER REPAIR	Carry out a road test followed by a diagnostic tool check.

GETtheMANUALS.org

ALP 10	**Brake pedal vibration.**

NOTES	Only consult this customer complaint after a complete check using the diagnostic tool.

Normal reaction of the brake pedal during an **ABS** operation or of limitation of pressure on the rear axle (brake compensator function).

AFTER REPAIR	Carry out a road test followed by a diagnostic tool check.

GETtheMANUALS.org

ALP 11	**Noise from pump, pipes or hydraulic assembly.**

NOTES	Only consult this customer complaint after a complete check using the diagnostic tool.

– Vibration of the assembly: check the presence and the condition of the assembly bracket insulating rubber mounting fittings.
– - Vibration of the pipes: check that all of the pipes are correctly engaged in their securing clips and that there is no contact between the pipes or between the pipes and the body.

The front left-hand wheel solenoid valves, front right-hand wheel solenoid valves, rear left-hand wheel solenoid valves and rear right-hand wheel solenoid valves control commands may be used while depressing the brake pedal to determine where the noise is coming from.

AFTER REPAIR	Carry out a road test followed by a diagnostic tool check.

GETtheMANUALS.org

ALP 12	**Brake lights will not light up or go out.**

NOTES	Only consult this customer complaint after a complete check using the diagnostic tool.

Using the diagnostic tool, check that **ET017** is functioning correctly.
If not, apply the fault finding procedure described above for **ET017**.

Using the diagnostic tool, check that the **FUNCTION CODE NUMBER** (CLIP: identification screen and NXR: parameter screen **PR041**) is **E1 or C1**.

– Check that the earths are present on the rear lights.
– Check that there is continuity on the relay mounting (relay fitted) between tracks **C3 and C4**.

If the continuity is incorrect, replace the lights out relay.

If the brake lights still do not light up under **+ after ignition feed**.

Check the insulation in relation to the earth of the connection between **track 13** of the computer connector and **track C2** of the brake light cut-off relay.

if the fault is still present, check the continuity between **tracks A3** of the brake light connector and the **rear lights connector**.

AFTER REPAIR	Carry out a road test followed by a diagnostic tool check.

GETtheMANUALS.org

VEL SATIS

3 Chassis

38C ANTI-LOCK BRAKING SYSTEM

ESP TEVES
Vdiag No.: 10 and 11

Fault finding - Introduction	38C - 1
Fault finding - System operation	38C - 8
Fault finding - Allocation of computer tracks	38C - 10
Diagnostics - Replacing parts	38C - 12
Diagnostics - Configuration and Programming	38C - 13
Fault finding - Fault summary table	38C - 15
Fault finding - Interpretation of faults	38C - 17
Fault finding - Conformity check	38C - 79
Fault finding - Status and parameter summary table	38C - 81
Fault finding - Interpretation of statuses	38C - 82
Fault finding - Dealing with statuses and parameters	38C - 84
Fault finding - Dealing with computer statuses and parameters	38C - 85
Fault finding - Dealing with command modes	38C - 86
Fault finding - Customer complaints	38C - 88
Fault finding - Fault Finding Chart	38C - 89

JANUARY 2006 **EDITION ANGLAISE**

"The repair procedures given by the manufacturer in this document are based on the technical specifications current when it was prepared.

The methods may be modified as a result of changes introduced by the manufacturer in the production of the various component units and accessories from which its vehicles are constructed."

All rights reserved by Renault s.a.s.

Copying or translating, in part or in full, of this document or use of the service part reference numbering system is forbidden without the prior written authority of Renault s.a.s.

© Renault s.a.s. 2006

ANTI-LOCK BRAKING SYSTEM
Fault finding - Introduction

GETtheMANUALS.org

1. SCOPE OF THIS DOCUMENT

This document presents the fault finding procedure applicable to all computers with the following specifications:

Vehicle(s): **VELSATIS**	*Computer name:* **TEVES ESP**
Function concerned: **TEVES MK60P ESP**	*Vdiag No.:* **10, 11**

2. PREREQUISITES FOR FAULT FINDING

Documentation type

Fault finding procedures (this manual):
– Assisted fault finding (integrated into the diagnostic tool), Dialogys.
Wiring Diagrams:
– Visu-Schéma (CD-ROM), paper version.

Type of diagnostic tools

– CLIP

Special tooling required

Special tooling required	
	Multimeter
Elé. 1681	Universal bornier

3. RECAP

Procedure

In order to save energy, the Velsatis UCH cuts off the **+ after ignition feed** after **3 minutes**.
To run fault finding on a computer, it is possible to force the **+ after ignition feed** on for **1 hour** by applying the following procedure:

Press the unlocking button on the card,
insert the card in the card reader,
press the Start button (cutting off **+ After Ignition Feed** timed mode),
hold the Start button for over 5 seconds until the immobiliser warning light starts flashing rapidly (**4 Hz**).

This "**forced + after ignition feed**" mode remains active for **1 hour**.
Pressing the Start button or removing the card from the card reader cuts off the **+ after ignition feed** but does not cut off the **forced after ignition feed** timed mode. Until one hour has elapsed, activating the **+ after ignition feed** will restart **forced + after ignition feed** for the remaining time.

GETtheMANUALS.org

Faults

Faults are declared as either present or stored (depending on whether they appeared in a certain context and have disappeared since, or whether they remain present but have not been diagnosed within the current context).

The **present** or **stored** status of faults should be taken into consideration when the diagnostic tool is switched on after the + after ignition feed (without any system components being active).

For a **present fault**, apply the procedure described in the **Interpretation of faults** section.

For a **stored fault**, note the faults displayed and apply the instructions in the **Notes** section.

If the fault is **confirmed** when the instructions in the Notes section are applied, the fault is present. Deal with the fault

If the fault is **not confirmed**, check:
- the electrical lines which correspond to the fault,
- the connectors for these lines (for oxidation, bent pins, etc.),
- the resistance of the component detected as faulty,
- the condition of the wires (melted or split insulation, wear).

Conformity check

The aim of the conformity check is to check data that does not produce a fault on the diagnostic tool because the data is inconsistent. Therefore, this stage is used to:
- carry out fault finding on faults that do not have a fault display, and which may correspond to a customer complaint.
- check that the system is operating correctly and that there is no risk of a fault recurring after repairs.

This section gives the fault finding procedures for statuses and parameters and the conditions for checking them.

If a status is not behaving normally or a parameter is outside the permitted tolerance values, consult the corresponding fault finding page.

Customer complaints - Fault finding chart

If the test with the diagnostic tool is OK but the customer complaint is still present, the fault should be processed by **customer complaints**.

A synopsis of the general procedure to follow is provided on the following page in the form of a flow chart

GETtheMANUALS.org

4. FAULT FINDING PROCEDURE (continued)

Wiring check

Fault finding problems
Disconnecting the connectors and/or manipulating the wiring harness may temporarily remove the cause of a fault.
Electrical measurements of voltage, resistance and insulation are generally correct, especially if the fault is not present when the analysis is made (stored fault).

Visual inspection
Look for damage under the bonnet and in the passenger compartment.
Carefully check the fuses, insulators and wiring harness routing.
Look for signs of oxidation.

Tactile inspection
While manipulating the wiring harness, use the diagnostic tool to note any change in fault status from stored to present.
Make sure that the connectors are properly locked.
Apply light pressure to the connectors.
Twist the wiring harness.
If there is a change in status, try to locate the source of the fault.

Inspection of each component
Disconnect the connectors and check the appearance of the clips and tabs, as well as the crimping (no crimping on the insulating section).
Make sure that the clips and tabs are properly locked in the sockets.
Check that no clips or tabs have been dislodged during connection.
Check the clip contact pressure using an appropriate model of tab.

Resistance check
Check the continuity of entire lines, then section by section.
Look for a short circuit to earth, to **+ 12 V** or to another wire.

If a fault is detected, repair or replace the wiring harness.

GETtheMANUALS.org

4. FAULT FINDING PROCEDURE

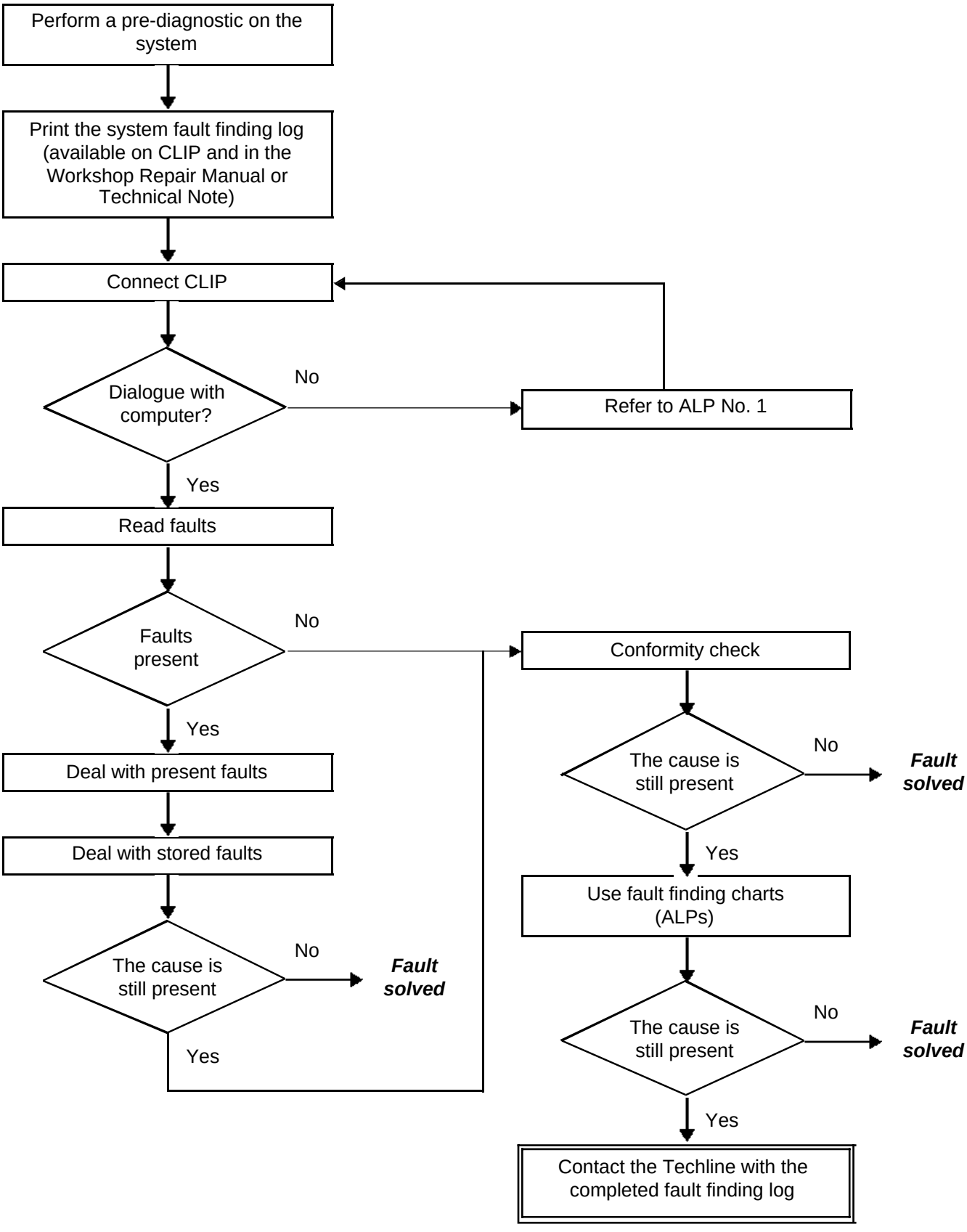

GETtheMANUALS.org

5. FAULT FINDING LOG

IMPORTANT!

IMPORTANT
Any fault on a complex system requires thorough fault finding with the appropriate tools. The FAULT FINDING LOG, which should be completed during the procedure, enables you to keep track of the procedure which is carried out. It is an essential document when consulting the manufacturer.

IT IS THEREFORE COMPULSORY TO COMPLETE A FAULT FINDING LOG EVERY TIME A FAULT FINDING PROCEDURE IS PERFORMED

You will always be asked for this log:

- when requesting technical assistance from Techline,
- for approval requests when replacing parts for which approval is mandatory,
- to be attached to monitored parts for which reimbursement is requested. The log is needed for warranty reimbursement, and enables better analysis of the parts removed.

6. SAFETY ADVICE

Safety rules must be observed during any work on a component to prevent any damage or injury:

- make sure that the battery is properly charged to avoid damaging the computers with a low load,
- use the appropriate tools.

GETtheMANUALS.org

FAULT FINDING LOG

System: anti-lock braking system and ESP (Electronic Stability program)

List of monitored parts: ***Computer***

Administrative identification

Date	2 0
Log completed by	
VIN	
Engine	
Diagnostic tool	CLIP
Revision	

Customer complaint

	1786	Anti-lock braking system not triggered		1787	Accidental triggering of anti-lock braking system		1790	Warning lights come on
	1788	ESP not triggered		1789	Accidental triggering of ESP			

Other — Your comments:

Conditions under which the customer complaint occurs

	004	Intermittently		005	While driving		011	When the ignition is switched on
	009	Sudden fault						

Other — Your comments:

Documentation used in fault finding

Fault finding procedure used	
Type of diagnostic manual:	MR ❑ Technical Note ❑ Assisted fault finding ❑
Fault finding manual No.:	
Wiring diagram used	
Wiring Diagram Technical Note No.:	
Other documentation	
Title and/or part number:	

RENAULT

FD 02
Fault finding log

GETtheMANUALS.org

FAULT FINDING LOG

System: anti-lock braking system and ESP (Electronic Stability program)

Computer identification and parts exchanged for the system

Part 1 part no.	
Part 2 part no.	
Part 3 part no.	
Part 4 part no.	
Part 5 part no.	

To be read with the Diagnostic tool (Identification screen):

Computer part no.	
Supplier No.	
Program No.	
Software version	
Calibration No.	
VDIAG	

Faults found with the diagnostic tool

Fault no.	Present	Stored	Fault name	Specification

Conditions under which fault occurs

Status or parameter no.	Parameter name	Value	Unit

System-specific information

Description:

Additional information

What factors led you to replace the computer? What other parts were replaced?	
Other defective functions?	
Your comments:	

RENAULT

FD 02
Fault finding log

page can be printed or photocopied - page can be printed or photocopied - page can be printed or photocopied

GETtheMANUALS.org

The **ESP** system on this vehicle incorporates the following functions:

- **ABS** (anti-lock braking system). The main functions of the **ABS** system are the electronic braking distribution (**EBD**) between the front and the rear through the regulation of rear wheel skidding, and anti-lock braking through the regulation of skidding on all four wheels.
- **MSR** (modulate system regulation). Traction control on the driven wheels under no load by limiting the engine braking.
- **ASR** (traction control). Limits skidding of the drive wheels during starting or acceleration phases by limiting the engine torque and braking the spinning wheel(s).
- **ESP** (electronic stability program). Electronic stability program limiting oversteer or understeer by braking certain wheels and controlling the engine torque.
- **CSV** (understeer control). Specific control of situations involving pronounced understeer by significant vehicle braking in conjunction with a specific dynamic stability program.
- **AFU** (emergency brake assist). This function is not connected to the ABS/ESP electronic system. It is provided mechanically in braking assistance.
- **HBA** (hydraulic brake assist). This function is used to compensate for lack of vacuum pressure on the brake servo. This vacuum pressure is generally generated by the engine. The ESP system detects a lack of braking efficiency by means of the pressure sensor and wheel speed sensor (deceleration). In this case the HBA system supports the driver's actions by actuating the hydraulic assembly pump and compensating for the lack of braking efficiency (emergency brake assist).
- **ASTM** (autoadaptive single track model). This function enables the computer to allow for dynamic chassis modifications during the lifetime of the vehicle (compensating for chassis ageing). The ESP can be restored to its initial configuration by disabling this function.
- **AUTOMATIC LIGHTING UP OF BRAKE LIGHTS.** In the event of understeer control (**CSV** only), the **ESP** computer controls the lighting of the brake lights, via a relay, to give warning of a severe deceleration as generated by the system (depending on national legislation).

The system also supplies the other computers with the vehicle speed via a wire connection for the radio and electric sunroof, and via the multiplex network for the rest of the computers. The **ESP** computer provides the odometry for the instrument panel and navigation aid over the multiplex network.

GETtheMANUALS.org

Fault finding warning lights programming

Instrument panel warning light				Instrument panel message	Meaning
Brake faults	ESP	SERVICE	STOP		
Brake faults	ESP		STOP		No computer
	ESP flashing at **8 Hz**				Tachometric index not programmed.
	ESP flashing at **8 Hz**	SERVICE			Tachometric and variant index not programmed.
Brake faults flashing at **2 Hz**	ESP flashing at **2 Hz**				ESP computer in fault finding mode.
	ESP	SERVICE		**Check the ESP**	ESP faulty.
Brake faults	ESP	SERVICE	STOP	**Braking system fault**	Electronic braking compensation faulty.
		SERVICE		**Check the ESP**	ESP faulty.
				ESP off	ESP off
				ESP (ESP regulation)	ESP active
		SERVICE		**ESP (ESP regulation)**	ESP being regulated. with fault

Note:
The STOP warning light is always accompanied by a single audible warning (1 beep).

GETtheMANUALS.org

26-TRACK CONNECTOR

Track	Allocation	Sensor / Actuator track
1	**+ Before Ignition Feed** solenoid valves and computer	Engine fuse and relay box 20A fuse
2	Rear left-hand speed sensor signal and earth	Track 1 rear left-hand wheel sensor
3	Rear left-hand speed sensor supply	Track 2 rear left-hand wheel sensor
4	Combined sensor supply	Track 3 combined sensor
5	Front right-hand speed sensor supply	Track 2 front right-hand wheel sensor
6	Front right-hand speed sensor signal and earth	Track 1 front right-hand wheel sensor
7	ESP On/Off switch (switch pressed signal)	Track B1 ESP On/Off Button
8	Front left-hand speed sensor signal and earth	Track 1 front left-hand wheel sensor
9	Front left-hand speed sensor supply	Track 2 front left-hand wheel sensor
10	Combined sensor earth	Track 5 combined sensor
11	Rear right-hand speed sensor supply	Track 2 rear right-hand wheel sensor
12	Rear right-hand speed sensor signal and earth	Track 1 rear right-hand wheel sensor
13	Earth (solenoid valves and computer)	Bodywork earth
14	Pump motor **+ before ignition feed**	Engine fuse and relay box 40A fuse
15	ESP private multiplex line L	Track 2 steering wheel angle sensor and track 1 combined sensor
16	Brake light switch signal	Brake light switch track A1
17	ESP private multiplex line H	Track 3 steering wheel angle sensor and track 2 combined sensor
18	K fault finding line	Diagnostic socket track A7
19	Not used	
20	**+ after ignition feed**	Passenger compartment fuse and relay box 5A fuse
21	Multiplex line L	Diagnostic socket track A14
22	Brake light activation control relay (earth)	Passenger compartment fuse and relay box white connector track C2
23	Multiplex line H	Diagnostic socket track A6
24	Vehicle speed signal output (by wire)	Navigation aid, xenon bulb, radio, proximity sensor and sunroof if fitted
25	Not used	
26	Pump earth	Bodywork earth

GETtheMANUALS.org

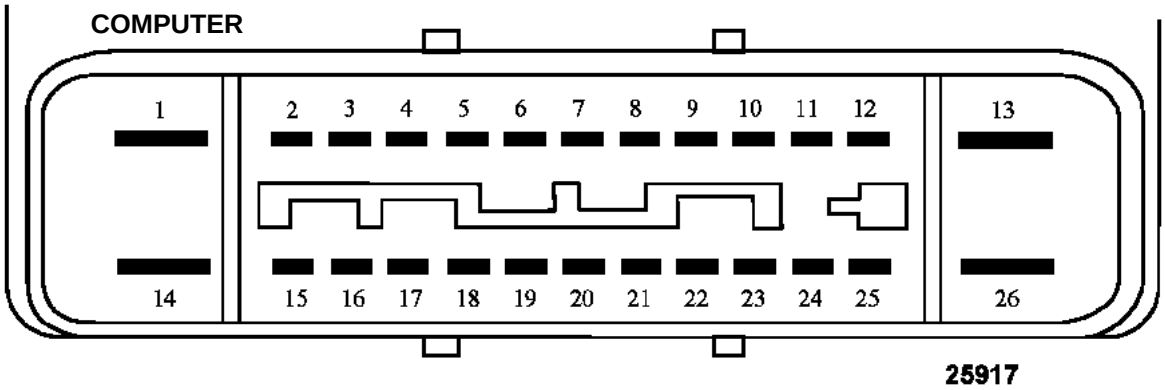

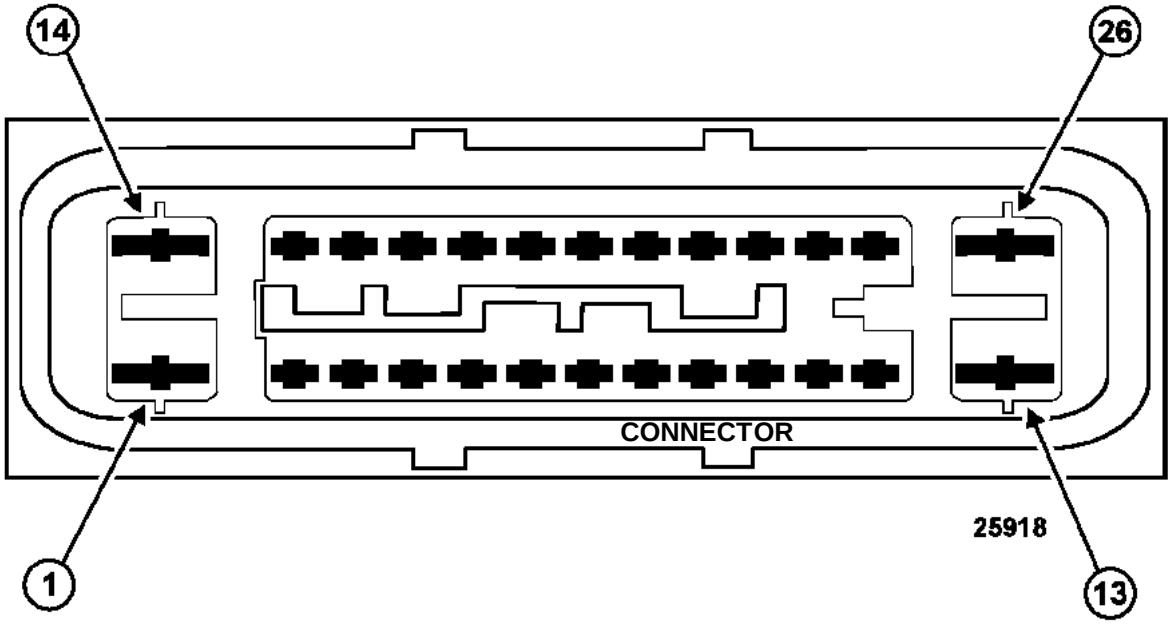

GETtheMANUALS.org

REPLACING THE ESP COMPUTER

Apply the following procedure when replacing the computer:
- **switch off the ignition;**
- **replace the computer (see MR 355 Mechanical, 38C, Anti-lock braking system),**
- **enter the VIN using command VP001,**
- **configure the tachometric index using command VP007,**
- **configure the vehicle parameters with command VP004,**
- **configure the gearbox type fitted on the vehicle using command CF079,**
- **inhibit or authorise the automatic lighting of the brake lights** (in accordance with national legislation) **using commands VP021 or VP022,**
- **for vehicles with F4R turbo or V4Y engines, use command VP031 Hydraulic braking compensation to activate the function;**
- **enter the most recent After Sales operation date using command VP006;**
- **perform a road test followed by a fault reading to confirm that the system is operating correctly.**

IMPORTANT
You must ensure that the variants selected correspond correctly with the vehicle type.

REPLACING THE COMBINED SENSOR

After replacing the combined sensor, **be sure to clear the offset using command RZ008 Lateral acceleration sensor offset**.

REPLACING THE STEERING WHEEL ANGLE SENSOR

Two types of steering wheel angle sensor are fitted to the Vel Satis:
- **1 multi-turn steering wheel sensor on Vel Satis Phase 1,**
- **1 single-turn steering wheel sensor on Vel Satis Phase 2.**

The multiturn sensor can be identified if, when the vehicle wheels are straight, there is a yellow patch opposite the window on the sensor (blue background when turning).

On the single-turn sensor nothing appears in the window (no coloured parts moving).

Note:
After replacing the steering wheel angle sensor, it is imperative to clear the offset using command RZ007 Steering wheel angle sensor offset.

GETtheMANUALS.org

SETTINGS

VP001: Write VIN.
This command allows the **vehicle identification number** to be entered into the computer. Use this command each time the computer is replaced. The VIN (**VF** ...) is etched on the manufacturer's plate on the front right-hand door pillar and stamped on the body under the windscreen to the left-hand side.

VP004: Vehicle parameters.

This command allows the configuration of the engine type + braking definition + body type.
Select command VP004 on the diagnostic tool.
You must ensure that the variants selected correspond correctly with the vehicle type.

VP006: Enter last After-Sales operation date.
Whenever the **ESP** is worked on in the shop, the date must be entered.

Select command VP006 on the diagnostic tool.
Enter the operation date with the tool keyboard.

VP007: Tachometric index.
This command is used to program the computer memory with the index required to calculate vehicle speed from the speed at which the wheels turn.

The **ESP MK60P** computer supplies the vehicle speed signal to all vehicle components that use this data (instrument panel, engine management, etc.). This vehicle speed signal replaces the one supplied by the speed sensor located on the gearbox.

The ESP computer calculates the vehicle speed from the wheel speed and the tyre circumference.

Note:
The vehicle speed is sent by wire (**track 24**) to the navigation assistance computer, radio and electric sunroof, and via the multiplex network to the other computers.

The tyre circumference must be programmed into the memory of a new computer. This consists of entering a number X using the VP007 "Tachometric index" command on the diagnostic tool.

Once the number has been entered using the **VP007** command, delete the fault in the computer memory and then switch off the ignition. Use the **PR030** parameter to check that the index has been stored correctly.

GETtheMANUALS.org

SETTINGS (continued)

VP021: Automatic brake lights deactivation.
Use this command only in those countries where legislation prohibits the brake lights lighting automatically without the brake pedal being depressed. The control of the brake lights is not authorised by **ESP** regulation (according to the legislation of the country).

VP022: Automatic brake lights authorisation.
This command is used to reactivate automatic lighting of the brake lights by **ESP** intervention after it has been inhibited by command **VP021** (in accordance with national legislation).

VP030: Chassis wear programming.
This programming should be **ACTIVE**. This command should only be used when applying a Technical Note.

VP031: Hydraulic braking compensation.
This function should be **ACTIVE** only on **F4R turbo and V4Y** engines.

CONFIGURATIONS

CF079: Gearbox type.
Use this command to configure the gearbox type fitted on the vehicle.

OTHER COMMANDS

LC008: Gearbox type.
This command tells you the gearbox type configured on the vehicle.

LC016: Chassis wear programming.
This command tells you whether the chassis wear function has been activated on the vehicle.

LC017: Hydraulic braking compensation.
This command tells you whether the hydraulic brake limiting function has been activated on the vehicle.

GETtheMANUALS.org

Tool fault	Associated DTC	Diagnostic tool title
DF001	**50CC**	Computer supply
DF006	**5015**	Front left-hand wheel speed sensor circuit
DF007	**5035**	Rear left-hand wheel speed sensor circuit
DF008	**501F**	Front left-hand wheel speed sensor signal
DF009	**503F**	Left-hand rear wheel speed sensor signal
DF010	**50D3**	Pump motor circuit
DF017	**50C3**	Computer
DF020	**5140**	Tachometric index programming
DF026	**5005**	Front right-hand wheel speed sensor circuit
DF027	**5025**	Rear right-hand wheel speed sensor circuit
DF028	**500F**	Right-hand front wheel speed sensor signal
DF029	**502F**	Right-hand rear wheel speed sensor signal
DF066	**50E2**	No injection multiplex signal
DF075	**5111**	Steering wheel angle sensor signal
DF080	**50F2**	Yaw rate sensor circuit
DF084	**50F1**	Lateral acceleration sensor circuit
DF088	**5124**	Pressure sensor circuit
DF090	**5041**	Front right-hand wheel target
DF091	**5042**	Front left-hand wheel target
DF092	**5043**	Rear right-hand wheel target
DF093	**5044**	Rear left-hand wheel target
DF096	**5148**	Computer internal electronic irregularity
DF097	**50E3**	No automatic transmission multiplex signal
DF098	**50E4**	No UCH multiplex signal
DF099	**50E7**	Private multiplex network
DF104	**5100**	Combined sensor internal electronic irregularity
DF108	**5110**	Steering wheel angle sensor
DF116	**5143**	Vehicle configuration programming
DF119	**5150**	Gearbox type configuration

GETtheMANUALS.org

Tool fault	Associated DTC	Diagnostic tool title
DF121	**D11D**	Torque requested not available
DF125	**5108**	Combined sensor supply
DF152	**50E6**	Multiplex network
DF155	**5107**	ESP function
DF188	**50C6**	Brake light switch circuit
DF191	**50CF**	ESP on/off button circuit
DF203	**50E9**	Combined sensor multiplex signals
DF215	**510F**	Lateral acceleration programming offset
DF216	**5113**	Steering wheel angle programming offset
DF218	**5125**	Pressure sensor programming offset
DF219	**D132**	ABS multiplex signal consistency
DF220	**5137**	Hydraulic unit temperature sensor circuit
DF221	**50E8**	Steering wheel angle sensor multiplex signals
DF224	**51C0**	ESP function deactivated
DF225	**51C1**	ESP and traction control functions deactivated
DF226	**510E**	Steering wheel angle sensor initialisation
DF227	**50F4**	Combined sensor initialisation
DF229	**5002**	Front right-hand wheel speed
DF230	**5011**	Front left-hand wheel speed
DF231	**5021**	Rear right-hand wheel speed
DF232	**5031**	Rear left-hand wheel speed
DF248	**51C2**	Chassis wear compensation function inhibited
DF250	**D117**	Engine speed multiplex signal
DF251	**D118**	Effective engine torque multiplex signal
DF252	**D119**	Torque request multiplex feedback signal
DF253	**D120**	Calculated torque multiplex signal
DF254	**D12F**	Resisting torque multiplex signal

GETtheMANUALS.org

DF001 PRESENT OR STORED	COMPUTER SUPPLY VOLTAGE 1.DEF: Battery undervoltage 2.DEF: Battery voltage too high

NOTES	**Conditions for applying the fault finding procedure to stored faults:** Apply the fault finding procedure whether the fault is present or stored.

1.DEF	***NOTES***	**Special notes:** this fault will appear during a road test (in excess of **12 mph (20 km/h)**) if the computer feed voltage is below the minimum operating voltage (**9.4 V** < min. battery voltage < **10 V**).

Check the tightness and the condition of the battery terminals.
Check the battery voltage and carry out the operations necessary to obtain a correct voltage (**10 V < battery voltage < 17 V**).

Check the connections on the **ESP** computer **26-track connector**.
Check the condition of the **ESP earths on tracks 13 and 26** (tightness, corrosion, etc.) and check the tightness of the terminal on the earth bolt on top of the hydraulic unit.
Visually check all the **ESP** wiring.

Check the condition and positioning of the **ESP fuses** in the **engine fuse and relay box**.
Check the **40A** and **20A** fuses in the **engine fuse and relay box**.
Check the **5A fuse (passenger compartment fuse and relay box)**.
Check for the **+ after ignition feed** on **track 20** of the computer's **26 track** connector.
Check for the **+ before ignition feed** on **tracks 1 and 14** of the computer's **26 track** connector.

If all the checks are in order, reconnect the computer and clear the computer fault memory.
Exit the fault finding procedure and carry out a road test.
If the fault is still present, contact the Techline.

AFTER REPAIR	Clear the computer fault memory. Carry out a road test followed by another check with the diagnostic tool.

GETtheMANUALS.org

DF001 **CONTINUED**	

2.DEF	***NOTES***	**Special notes:** This fault will appear in a road test (in excess of **12 mph (20 km/h)**) if the computer supply voltage is above the maximum operating voltage (**17.5 V** < max battery voltage < **19 V**). This fault may appear when starting using a charger or a **24 V** battery.

Check the tightness and the condition of the battery terminals. Check the battery voltage and carry out the operations necessary to obtain a correct voltage (**10 V < battery voltage < 17 V**).
If all the checks are in order, reconnect the computer and clear the computer fault memory. Exit the fault finding procedure and carry out a road test. If the fault is still present, contact the Techline.

AFTER REPAIR	Clear the computer fault memory. Carry out a road test followed by another check with the diagnostic tool.

GETtheMANUALS.org

DF006 PRESENT OR STORED	FRONT LEFT-HAND WHEEL SPEED SENSOR CIRCUIT

NOTES	**Conditions for applying the fault finding procedure to stored faults:** Apply the fault finding procedure described below in **DF006 stored**.

DF006 PRESENT	***NOTES***	None

Check the connection and condition of the sensor and computer connectors.
Disconnect the sensor and check **under + after ignition feed** that there is a voltage of approximately **12 V** on the sensor connector terminals on the computer side.
Is the voltage measured correct?

YES

Swap the 2 front wheel speed sensors over. Clear the computer fault memory.
Switch off the ignition. Switch on the ignition again.
If the fault initially declared **DF006 Front left-hand wheel speed sensor circuit** has become **DF026 Front right-hand wheel speed sensor circuit**, replace the wheel speed sensor.
If the fault is still on the same side, the wiring between the computer and the sensor is faulty.
Check and ensure the continuity of the following connections:

Sensor connector **track 1** → **track 8** Computer connector

Sensor connector **track 2** → **track 9** Computer connector

Also check the insulation between these 2 connections.

NO

Check and ensure the continuity of the following connections:

Sensor connector **track 1** → **track 8** Computer connector

Sensor connector **track 2** → **track 9** Computer connector

Also check the insulation between these 2 connections.
Carry out a visual inspection of the sensor wiring.
If the fault is still present, contact the Techline.

AFTER REPAIR	Clear the computer fault memory. Carry out a road test followed by another check with the diagnostic tool.

GETtheMANUALS.org

DF006 **CONTINUED**	

DF006 STORED	*NOTES*	None

Check the connection and condition of the sensor and computer connectors.
Swap the 2 front wheel speed sensors over.
Clear the computer fault memory.
Carry out a road test followed by another check with the diagnostic tool.

– If the fault initially declared **DF006 Front left-hand wheel speed sensor circuit** has become **DF026 Front right-hand wheel speed sensor circuit**, replace the wheel speed sensor.
– If the fault remains on the same side, the wiring between the computer and the sensor is faulty.
Check and ensure the continuity of the following connections:

Sensor connector **track 1** ⟶ **track 8** Computer connector

Sensor connector **track 2** ⟶ **track 9** Computer connector

Also check the insulation between these 2 connections.

AFTER REPAIR	Clear the computer fault memory. Carry out a road test followed by another check with the diagnostic tool.

GETtheMANUALS.org

DF007 PRESENT OR STORED	REAR LEFT-HAND WHEEL SPEED SENSOR CIRCUIT

NOTES	**Conditions for applying the fault finding procedure to stored faults:** Follow the fault finding procedure described below for **DF007 stored**.

DF007 PRESENT	***NOTES***	None

Check the connection and condition of the sensor and computer connectors.
Disconnect the sensor and check **under + after ignition feed** that there is a voltage of approximately **12 V** on the sensor connector terminals on the computer side.
Is the voltage measured correct?

YES

Swap the 2 rear wheel speed sensors. Clear the computer fault memory.
Switch off the ignition. Switch on the ignition again.
If the fault initially declared **DF007 "Rear left-hand wheel speed sensor circuit"** has become a **DF027 "Rear right-hand wheel speed sensor circuit" present fault**, replace the wheel speed sensor.
If the fault is still on the same side, the wiring between the computer and the sensor is faulty.
Check and ensure the continuity of the following connections:

Sensor connector **track 1** → **Track 2** Computer connector

Sensor connector **track 2** → **Track 3** Computer connector

Also check the insulation between these 2 connections.

NO

Check and ensure the continuity of the following connections:

Sensor connector **track 1** → **Track 2** Computer connector

Sensor connector **track 2** → **Track 3** Computer connector

Also check the insulation between these 2 connections.
Carry out a visual inspection of the sensor wiring.
If all the checks are in order, contact Techline.

AFTER REPAIR	Clear the computer fault memory. Carry out a road test followed by another check with the diagnostic tool.

GETtheMANUALS.org

DF007 **CONTINUED**	

DF007 STORED	*NOTES*	None

Check the connection and condition of the sensor and computer connectors.
Swap the 2 rear wheel speed sensors.
Clear the computer fault memory.
Carry out a road test followed by another check with the diagnostic tool.

– If the fault initially declared **DF007 "Rear left-hand wheel speed sensor circuit"** has become a **DF027 "Rear right-hand wheel speed sensor circuit" present fault**, replace the wheel speed sensor.
– If the fault remains on the same side, the wiring between the computer and the sensor is faulty.
Check and ensure the continuity of the following connections:

Sensor connector **track 1** → **Track 2** Computer connector

Sensor connector **track 2** → **Track 3** Computer connector

Also check the insulation between these 2 connections.

AFTER REPAIR	Clear the computer fault memory. Carry out a road test followed by another check with the diagnostic tool.

GETtheMANUALS.org

DF008 STORED	FRONT LEFT WHEEL SPEED SENSOR SIGNAL

NOTES	**Priorities when dealing with a number of faults:** Deal with fault **DF006 Front left wheel speed sensor circuit** first if it is present.
	Conditions for applying the fault finding procedure to stored faults: The fault is declared present during a road test (in excess of **12 mph (20 km/h)** for **2 minutes**).

Check the condition of the axles (impacts, damage, etc.) and the conformity and good condition of the tyres.
Check that the braking system (condition of brake pads, sealing, sticking, bleed, bearing clearance, etc.) is in good condition.

Visually inspect the condition of the target (for clogging, metallic contamination, bearing grease, etc.) and clean using compressed air if necessary.
If there is a lot of grease on the target, contact the Techline.
Check the quality of the mounting of the wheel speed sensor (correct clipping without excessive play).
Check the conformity of the target (condition, number of teeth = **48**) using the special command **SC001 Check target teeth**.

Check the connection and the condition of the sensor connectors.
Visually inspect the sensor wiring and check the quality of the connections on the **26 track** computer connector.

If all the checks are in order, swap the 2 front wheel speed sensors. Clear the computer fault memory.
Switch off the ignition. Switch the ignition back on and carry out a road test.
If the fault initially declared **DF008 "Front left-hand wheel speed sensor signal"** has become a **DF028 "Front right-hand wheel speed sensor signal" present fault**, replace the wheel speed sensor.
If the fault stays on the same side, the target is faulty, replace the active sensor bearing.

AFTER REPAIR	Clear the computer fault memory. Carry out a road test followed by another check with the diagnostic tool.

GETtheMANUALS.org

DF009 STORED	REAR LEFT-HAND WHEEL SPEED SENSOR SIGNAL

NOTES	**Priorities when dealing with a number of faults:** Deal with fault **DF007 "Rear left-hand wheel speed sensor circuit"** first if it is present.
	Conditions for applying the fault finding procedure to stored faults: The fault is declared present during a road test (in excess of **12 mph (20 km/h)** for **2 minutes**).

Check the condition of the axles (impacts, damage, etc.) and the conformity and good condition of the tyres.
Check that the braking system (condition of brake pads, sealing, sticking, bleed, bearing clearance, etc.) is in good condition.

Visually inspect the condition of the target (for clogging, metallic contamination, bearing grease, etc.) and clean using compressed air if necessary.
If there is a lot of grease on the target, contact the Techline.
Check that the wheel speed sensor mounting is in good condition.
Check the sensor/target air gap through one revolution of the wheel: **0.3 mm < rear wheel air gap < 1.3 mm**.
Check the conformity of the target (condition, number of teeth = **48**) using the special command **SC001 Check target teeth**.

Check the connection and the condition of the sensor connectors.
Carry out a visual check of the sensor wiring and check that the connections on the **26-track computer connector** are in good condition.

If all the checks are in order, swap the 2 rear wheel speed sensors. Clear the computer fault memory.
Switch off the ignition. Switch the ignition back on and carry out a road test.
If fault **DF009 Rear left-hand wheel speed sensor signal** initially displayed has changed to **DF029 Rear right-hand wheel speed sensor signal** present, replace the wheel speed sensor.
If the fault remains on the same side, the target is defective, replace the rear left-hand "disk-hub-bearing" assembly (see **MR353 Mechanical, 33A, Rear axle components**).

AFTER REPAIR	Clear the computer fault memory. Carry out a road test followed by another check with the diagnostic tool.

GETtheMANUALS.org

DF010 PRESENT OR STORED	PUMP MOTOR CIRCUIT

NOTES	**Special note: if this fault appears after replacing the computer, the pump motor connection is twisted. Separate the hydraulic unit from the computer and restore the connection to working order.**
	Conditions for applying the fault finding procedure to stored faults: The fault appears after: Brake pedal held down + actuator command **AC016 Pump motor test**.

Check the tightness and the condition of the battery terminals.
Check the condition and positioning of the **ESP fuses** in the **engine fuse and relay box**.
Check the **40A and 20A** fuses in the **engine fuse and relay box**.
Check the **5A fuse (passenger compartment fuse and relay box)**.

Check the connections on the **ESP** computer **26-track connector**.
Check for the **+ after ignition feed** on **track 20** of the computer's **26 track** connector.
Check for the **+ before ignition feed** on **tracks 1 and 14** of the computer's **26 track** connector.

Check the condition of the **ESP earths on tracks 13 and 26** (tightness, corrosion, etc.) and check the tightness of the terminal on the earth bolt on top of the hydraulic unit.
Visually check all the **ESP** wiring.

Run actuator command **AC016 Pump motor test**. If the fault is still present (no sound of the pump turning or loss of communication with the computer), replace the hydraulic unit (pump mechanically seized, pump short circuited, etc.).

AFTER REPAIR	Clear the computer fault memory. Carry out a road test (in excess of **24 mph (40 km/h)**, then carry out another check with the diagnostic tool.

GETtheMANUALS.org

DF017 PRESENT OR STORED	COMPUTER 1.DEF: Internal electronic fault

NOTES	**Conditions for applying the fault finding procedure to stored faults:** Apply the fault finding procedure whether the fault is present or stored.

Check the connections on the **ESP computer** 26-track connector.
Check that there are no traces of oxidisation.
If signs of oxidation are found, the ESP wiring and the computer must be replaced. If not, replace only the computer.

Clear the computer fault memory, exit the diagnostic and switch off the ignition.
Carry out another check using the diagnostic tool. If the fault is still present, contact the Techline.

AFTER REPAIR	Clear the computer fault memory. Carry out a road test followed by another check with the diagnostic tool.

GETtheMANUALS.org

DF020 PRESENT	TACHOMETRIC INDEX PROGRAMMING

NOTES	None

The **ESP MK60P** computer with tachometric function transmits the vehicle speed signal to all vehicle components that use this data (instrument panel, engine management, etc.).
This vehicle speed signal replaces the one supplied by the speed sensor located on the gearbox.
The **ESP** computer calculates the vehicle speed from the wheel speed and the tyre circumference.

The tyre circumference must be programmed into the memory of a new computer. This consists of entering an index X using the VP007 TACHOMETRIC INDEX command on the diagnostic tool.
Once the index has been entered using the **VP007** command, clear the computer fault memory and switch off the ignition.
Use the **PR030** parameter to check that the index has been stored correctly.

If the fault is still present, contact the Techline.

AFTER REPAIR	Clear the computer fault memory. Carry out a road test followed by another check with the diagnostic tool.

GETtheMANUALS.org

DF026 PRESENT OR STORED	FRONT RIGHT-HAND WHEEL SPEED SENSOR CIRCUIT

NOTES	**Conditions for applying the fault finding procedure to stored faults:** Follow the fault finding procedure described below for **DF026 stored**.

DF026 PRESENT	***NOTES***	None

Check the connection and condition of the sensor and computer connectors.
Check the connector on the intermediate connections under the body on the front left-hand wing upper section (**R183**).
Disconnect the sensor and check **under + after ignition feed** that there is a voltage of approximately **12 V** on the sensor connector terminals on the computer side.
Is the voltage measured correct?

YES

Swap the 2 front wheel speed sensors over. Clear the computer fault memory.
Switch off the ignition. Switch on the ignition again.
If the fault initially declared **DF026 "Front right-hand wheel speed sensor circuit"** has become a **DF006 "Front left-hand wheel speed sensor circuit" present fault**, replace the wheel speed sensor.
If the fault remains on the same side, the wiring between the computer and the sensor is faulty.
Check and ensure the continuity of the following connections:

Sensor connector **track 1** ⟶ **track 6** Computer connector

Sensor connector **track 2** ⟶ **track 5** Computer connector

If the connection is faulty:
Disconnect **2-track intermediate R183 connector** mounted in the upper section of the front left-hand wing and check the condition of the connections.
Check and ensure the continuity of the connections between:

Sensor connector **track 1** ⟶ **track B** Intermediate connector

Sensor connector **track 2** ⟶ **track A** Intermediate connector

Also check the insulation between these connections.

Check and ensure the continuity of the connections between:

Sensor connector **track 5** ⟶ **track A** Intermediate connector

Sensor connector **track 6** ⟶ **track B** Intermediate connector

Also check the insulation between these connections.

AFTER REPAIR	Clear the computer fault memory. Carry out a road test followed by another check with the diagnostic tool.

GETtheMANUALS.org

DF026 **CONTINUED 1**	

NO

Check and ensure the continuity of the following connections:

Sensor connector **track 1** → **track 6** Computer connector

Sensor connector **track 2** → **track 5** Computer connector

If the connection is faulty:
Disconnect **2-track intermediate R183 connector** mounted in the upper section of the front left-hand wing and check the condition of the connections.
Check and ensure the continuity of the connections between:

Sensor connector **track 1** → **track B** Intermediate connector

Sensor connector **track 2** → **track A** Intermediate connector

Also check the insulation between these connections.

Check and ensure the continuity of the connections between:

Sensor connector **track 5** → **track A** Intermediate connector

Sensor connector **track 6** → **track B** Intermediate connector

Also check the insulation between these connections.
Visually inspect the sensor wiring.
If all the checks are in order, contact Techline.

AFTER REPAIR	Clear the computer fault memory. Carry out a road test followed by another check with the diagnostic tool.

GETtheMANUALS.org

DF026 **CONTINUED 2**	

DF026 STORED	*NOTES*	None

Check the connection and condition of the sensor and computer connectors.
Check the connector on the intermediate connections under the body on the front left-hand wing upper section (**R183**).
Swap the 2 front wheel speed sensors over.
Clear the computer fault memory.
Carry out a road test followed by another check with the diagnostic tool.

– If the fault initially declared **DF026 "Front right-hand wheel speed sensor circuit"** has become a **DF006 "Front left-hand wheel speed sensor circuit" present fault**, replace the wheel speed sensor.
– If the fault remains on the same side, the wiring between the computer and the sensor is faulty.
Check and ensure the continuity of the following connections:

Sensor connector **track 1** → **track 6** Computer connector

Sensor connector **track 2** → **track 5** Computer connector

If the connection is faulty:
Disconnect **2-track intermediate R183 connector** mounted in the upper section of the front left-hand wing and check the condition of the connections.
Check and ensure the continuity of the connections between:

Sensor connector **track 1** → **track B** Intermediate connector

Sensor connector **track 2** → **track A** Intermediate connector

Also check the insulation between these connections.

Check and ensure the continuity of the connections between:

Computer connector **track 5** → **track A** Intermediate connector

Computer connector **track 6** → **track B** Intermediate connector

Also check the insulation between these connections.

AFTER REPAIR	Clear the computer fault memory. Carry out a road test followed by another check with the diagnostic tool.

GETtheMANUALS.org

DF027 PRESENT OR STORED	REAR RIGHT-HAND WHEEL SPEED SENSOR CIRCUIT

NOTES	**Conditions for applying the fault finding procedure to stored faults:** Follow the fault finding procedure described below for **DF027 stored**.

DF027 PRESENT	***NOTES***	None

Check the connection and condition of the sensor and computer connectors.
Disconnect the sensor and check **under + after ignition feed** that there is a voltage of approximately **12 V** on the sensor connector terminals on the computer side.
Is the voltage measured correct?

YES

Swap the 2 rear wheel speed sensors. Clear the computer fault memory.
Switch off the ignition. Switch on the ignition again.
If the fault initially declared **DF027 "Rear right-hand wheel speed sensor circuit"** has become a **DF007 "Rear left-hand wheel speed sensor circuit" present fault**, replace the wheel speed sensor.
If the fault remains on the same side, the wiring between the computer and the sensor is faulty.
Check and ensure the continuity of the following connections:

Sensor connector **track 1** → **track 12** Computer connector

Sensor connector **track 2** → **track 11** Computer connector

Also check the insulation between these 2 connections.

NO

Check and ensure the continuity of the following connections:

Sensor connector **track 1** → **track 12** Computer connector

Sensor connector **track 2** → **track 11** Computer connector

Also check the insulation between these 2 connections.
Visually inspect the sensor wiring.
If all the checks are in order, contact Techline.

AFTER REPAIR	Clear the computer fault memory. Carry out a road test followed by another check with the diagnostic tool.

GETtheMANUALS.org

DF027 **CONTINUED**	

DF027 STORED	*NOTES*	None

Check the connection and condition of the sensor and computer connectors.
Swap the 2 rear wheel speed sensors.
Clear the computer fault memory.
Carry out a road test followed by another check with the diagnostic tool.

– If the fault initially declared **DF027 "Rear right-hand wheel speed sensor circuit"** has become a **DF007 "Rear left-hand wheel speed sensor circuit" present fault**, replace the wheel speed sensor.
– If the fault remains on the same side, the wiring between the computer and the sensor is faulty.
Check and ensure the continuity of the following connections:

Sensor connector **track 1** → **track 12** Computer connector

Sensor connector **track 2** → **track 11** Computer connector

Also check the insulation between these 2 connections.

AFTER REPAIR	Clear the computer fault memory. Carry out a road test followed by another check with the diagnostic tool.

GETtheMANUALS.org

DF028 STORED	FRONT RIGHT-HAND WHEEL SPEED SENSOR SIGNAL

NOTES	**Priorities when dealing with a number of faults:** Deal with fault **DF026 Front right wheel speed sensor circuit** first if it is present.
	Conditions for applying the fault finding procedure to stored faults: The fault is declared present during a road test (in excess of **12 mph (20 km/h)** for **2 minutes**).

Check the condition of the axles (impacts, damage, etc.) and the conformity and good condition of the tyres.
Check that the braking system (condition of brake pads, sealing, sticking, bleed, bearing clearance, etc.) is in good condition.

Visually inspect the condition of the target (for clogging, metallic contamination, bearing grease, etc.) and clean using compressed air if necessary.
If there is a lot of grease on the target, contact the Techline.
Check the quality of the mounting of the wheel speed sensor (correct clipping without excessive play).
Check the conformity of the target (condition, number of teeth = **48**) using the special command **SC001 Check target teeth**.

Check the connection and the condition of the sensor connectors.
Carry out a visual check of the sensor wiring and check that the connections on the **26-track computer connector** are in good condition.

If all the checks are in order, swap the 2 front wheel speed sensors. Clear the computer fault memory.
Switch off the ignition. Switch the ignition back on and carry out a road test.
If the fault initially declared **DF028 "Front right-hand wheel speed sensor signal"** has become a **DF008 "Front left-hand wheel speed sensor signal" present fault**, replace the wheel speed sensor.
If the fault stays on the same side, the target is faulty, replace the active sensor bearing.

AFTER REPAIR	Clear the computer fault memory. Carry out a road test followed by another check with the diagnostic tool.

GETtheMANUALS.org

DF029 STORED	REAR RIGHT-HAND WHEEL SPEED SENSOR SIGNAL

NOTES	**Priorities when dealing with a number of faults:** Deal with fault **DF027 right rear wheel speed sensor circuit** first if it is present.
	Conditions for applying the fault finding procedure to stored faults: The fault is declared present during a road test (in excess of **12 mph (20 km/h)** for **2 minutes**).

Check the condition of the axles (impacts, damage, etc.) and the conformity and good condition of the tyres.
Check that the braking system (condition of brake pads, sealing, sticking, bleed, bearing clearance, etc.) is in good condition.

Visually inspect the condition of the target (for clogging, metallic contamination, bearing grease, etc.) and clean using compressed air if necessary.
If there is a lot of grease on the target, contact the Techline.
Check that the wheel speed sensor mounting is in good condition.
Check the sensor/target air gap through one revolution of the wheel: **0.3 mm < rear wheel air gap < 1.3 mm**.
Check the conformity of the target (condition, number of teeth = **48**) using the special command **SC001 Check target teeth**.

Check the connection and the condition of the sensor connectors.
Carry out a visual check of the sensor wiring and check that the connections on the **26-track computer connector** are in good condition.

If all the checks are in order, swap the 2 rear wheel speed sensors. Clear the computer fault memory.
Switch off the ignition. Switch the ignition back on and carry out a road test.
If the fault initially declared as **DF029 Rear right wheel speed sensor circuit signal** has become a present **DF009 Rear left wheel speed sensor circuit signal**, replace the wheel speed sensor.
If the fault remains on the same side, the target is defective; replace the rear right-hand disk-hub-bearing assembly (see **MR353 Mechanical, 33A, Rear axle components**).

AFTER REPAIR	Clear the computer fault memory. Carry out a road test followed by another check with the diagnostic tool.

GETtheMANUALS.org

DF066 PRESENT OR STORED	NO INJECTION MULTIPLEX SIGNAL

NOTES	**Special note:** although stored in the computer, the **ESP** system is not defective. The **ESP** is deactivated due to unusable injection signals. Perform fault finding on the injection system using the diagnostic tool. Note: The injection does not always store these transient faults as quickly as the **ESP system**. If no fault is stored in the injection computer, start the engine; if there is no fault present, contact the Techline. **Once the fault in the injection system has been repaired, clear the ESP computer fault memory.**
	Conditions for applying the fault finding procedure to stored faults: The fault is declared present when the engine is started up.

Carry out a multiplex network test and check the injection system with the diagnostic tool.
If the fault is still present, contact the Techline.

AFTER REPAIR	Clear the computer fault memory. Carry out a road test followed by another check with the diagnostic tool.

GETtheMANUALS.org

DF075 STORED	STEERING WHEEL ANGLE SENSOR SIGNAL

NOTES	**Conditions for applying the fault finding procedure to stored faults:** The fault is declared as present following after turning from lock to lock and a road test.

Check that the connector is correctly connected to the sensor and not to the inert headlight switch support next to the sensor.
Check that the steering wheel angle sensor is correctly fitted and positioned on the steering column.
Set the wheels straight ahead and check in the diagnostic tool parameter section that **PR033** is between **- 15**° **and + 15**° inclusive.
If **PR033** is incorrect, carry out a complete axle geometry check.
Use the diagnostic tool to clear the sensor offset with the clear command **RZ007 Steering wheel angle sensor offset**.

Clear the computer fault memory, exit the diagnostic and switch off the ignition.
Carry out a road test on a perfectly straight road.

If the fault recurs replace the steering wheel angle sensor (**see Replacement of components**) and clear the offset using command **RZ007**.

AFTER REPAIR	**after replacing the steering wheel angle sensor, it is imperative to clear the offset using command RZ007 Steering wheel angle sensor offset.** Clear the computer fault memory. Carry out a road test followed by another check with the diagnostic tool.

GETtheMANUALS.org

DF080 PRESENT	YAW RATE SENSOR CIRCUIT 1.DEF: Signal inconsistent 2.DEF: Sensor internal electronic fault 3.DEF: Offset too high

NOTES	**Priorities when dealing with a number of faults:** Deal first with fault **DF104 Combined sensor internal electronic fault** if it is present.

1.DEF	***NOTES***	**Special notes:** The signal supplied by the yaw sensor is not consistent with the yaw rate recalculated using the wheel speeds, the steering wheel angle and lateral acceleration. This fault only appears at speeds above **6 mph (10 km/h)**.

Check that the combined sensor is fitted the right way round on its plate, is in good condition and correctly tightened to 8 Nm and check the mounting of the plate on the floor (under the centre console behind the gear lever).
Switch on the ignition and check for the **+ after ignition feed** between **tracks 3 and 5** of the combined sensor connector:
– If the voltage is incorrect:
Check and ensure continuity and insulation of the following connections:

Sensor connector Track 3 → **Track 4 computer connector**

Sensor connector Track 5 → **Track 10 computer connector**

Also check the insulation between these connections.
If the wiring is in order, contact Techline.

– If the voltage is correct but the fault is still present after clearing the computer's fault memory:
Check for and ensure continuity and insulation from the vehicle earth on the following connections:

Sensor connector Track 3 → **Track 4 computer connector**

Sensor connector Track 5 → **Track 10 computer connector**

Also check the insulation between these connections.
If all the checks are in order, replace the combined sensor (**see Replacement of components**) and clear the offset using command **RZ008 Lateral acceleration sensor offset**.

AFTER REPAIR	**After replacing the combined sensor, it is imperative to clear the offset using command RZ008 Lateral acceleration sensor offset.** Clear the computer fault memory. Carry out a road test followed by another check with the diagnostic tool.

GETtheMANUALS.org

DF080 **CONTINUED**	

2.DEF	***NOTES***	**Special notes:** The signal supplied by the sensing element inside the yaw sensor is outside the ranges specified, or defective temperature compensation mechanism. This fault may be the result of an impact on the sensor (or on the vehicle), or an excessive temperature in the area where the sensor is fitted.

Check that the combined sensor is fitted the right way round on its plate, is in good condition and correctly tightened to **8 Nm** and check the mounting of the plate on the floor (under the centre console behind the gear lever).
Clear the computer fault memory.
Check that the temperature in the area where the sensor is mounted is < **80 °C**.
If the fault recurs, replace the combined sensor (**see Replacement of components**) and clear the offset using command **RZ008 Lateral acceleration sensor offset**.

3.DEF	***NOTES***	**Special notes:** The signal offset is too high.

Check that the combined sensor is fitted the right way round on its plate, is in good condition and correctly tightened to **8 Nm** and check the mounting of the plate on the floor (under the centre console behind the gear lever).
Check that the connections, type and location of any special equipment (CB, Car phone, Amplifier, Bass loudspeaker (subwoofer type), etc.) do not disturb ESP operation.
Clear the computer fault memory.
Carry out a road test followed by another check with the diagnostic tool.
If the fault recurs, replace the combined sensor (**see Replacement of components**) and clear the offset using command **RZ008 Lateral acceleration sensor offset**.

AFTER REPAIR	**After replacing the combined sensor, it is imperative to clear the offset using command RZ008 Lateral acceleration sensor offset.** Clear the computer fault memory. Carry out a road test followed by another check with the diagnostic tool.

GETtheMANUALS.org

DF084 PRESENT	LATERAL ACCELERATION SENSOR CIRCUIT 1.DEF: Signal inconsistent 2.DEF: Sensor internal electronic fault

NOTES	**Priorities when dealing with a number of faults:** Deal first with fault **DF104 Combined sensor internal electronic fault** if it is present.

1.DEF	***NOTES***	**Special notes:** The lateral acceleration signal supplied by the combined sensor is not consistent with lateral acceleration recalculated using the wheel speeds, the steering wheel angle and yaw rate. This fault only appears at speeds above **6 mph (10 km/h)**.

Check that the combined sensor is fitted the right way round on its plate, is in good condition and correctly tightened to **8 Nm** and check the mounting of the plate on the floor (under the centre console behind the gear lever).
Switch on the ignition and check for the **+ after ignition feed** between **tracks 3 and 5** of the combined sensor connector:
– If the voltage is incorrect:
Check and ensure continuity and insulation of the following connections:

Sensor connector Track 3 ⟶ **Track 4 computer connector**

Sensor connector Track 5 ⟶ **Track 10 computer connector**

Also check the insulation between these connections.
If the wiring is in order, contact Techline.

– If the voltage is correct but the fault is still present after clearing the computer's fault memory:
Check for and ensure continuity and insulation from the vehicle earth on the following connections:

Sensor connector Track 3 ⟶ **Track 4 computer connector**

Sensor connector Track 5 ⟶ **Track 10 computer connector**

Also check the insulation between these connections.
If all the checks are in order, replace the combined sensor (**see Replacement of components**) and clear the offset using command **RZ008 Lateral acceleration sensor offset**.

AFTER REPAIR	**After replacing the combined sensor, it is imperative to clear the offset using command RZ008 Lateral acceleration sensor offset.** Clear the computer fault memory. Carry out a road test followed by another check with the diagnostic tool.

GETtheMANUALS.org

DF084 **CONTINUED**	

2.DEF	***NOTES***	**Special notes:** The lateral acceleration sensor has an internal self-test function that can fully check the signal pathway; from the physical sensor to the combined sensor processor. The fault is stored in the event of an error during the self-test.

Check that the combined sensor is fitted the right way round on its plate, is in good condition and correctly tightened to **8 Nm** and check the mounting of the plate on the floor (under the centre console behind the gear lever).
Clear the computer fault memory.

If the fault recurs, replace the combined sensor (see **Replacement of components**) and clear the offset using command **RZ008 Lateral acceleration sensor offset**.

AFTER REPAIR	**After replacing the combined sensor, it is imperative to clear the offset using command RZ008 Lateral acceleration sensor offset.** Clear the computer fault memory. Carry out a road test followed by another check with the diagnostic tool.

GETtheMANUALS.org

DF088 **PRESENT**	PRESSURE SENSOR CIRCUIT 1.DEF: Signal inconsistent 2.DEF: Sensor internal electronic fault

NOTES	**Special notes:** The signal supplied by one of the 2 pressure sensors (inside the hydraulic unit) is outside the specified ranges.

Clear the computer fault memory.
With the engine running, read the brake pressure value **PR035 using the diagnostic tool** and depress the brake pedal hard; the pressure should reach approximately **100 to 150 bar**.
Separate the computer from the hydraulic unit to check the cleanliness of the contacts: the 4 springs on the computer side and the 4 studs opposite them on the pressure sensor.
Repair if necessary.

If the fault recurs, replace the entire hydraulic unit.

AFTER REPAIR	**The pressure sensor is incorporated in the computer. If the pressure sensor is defective: change the complete hydraulic unit.** Clear the computer fault memory. Carry out a road test followed by another check with the diagnostic tool.

GETtheMANUALS.org

DF090 STORED	FRONT RIGHT-HAND WHEEL TARGET

NOTES	**Priorities when dealing with a number of faults:** Deal with fault **DF026 Front right wheel speed sensor circuit** first if it is present.
	Conditions for applying the fault finding procedure to stored faults: The fault is declared present during a road test (in excess of **12 mph (20 km/h)** for **2 minutes**).

Check the condition of the axles (impacts, damage, etc.) and the conformity and good condition of the tyres.
Check that the braking system (condition of brake pads, sealing, sticking, bleed, bearing clearance, etc.) is in good condition.

Visually inspect the condition of the target (for clogging, metallic contamination, bearing grease, etc.) and clean using compressed air if necessary.
If there is a lot of grease on the target, contact the Techline.
Check the quality of the mounting of the wheel speed sensor (correct clipping without excessive play).
Check the conformity of the target (condition, number of teeth = **48**) using the special command **SC001 Check target teeth**.

Check the connection and the condition of the sensor connectors.
Carry out a visual check of the sensor wiring and check that the connections on the **26-track computer connector** are in good condition.

If all the checks are in order, swap the 2 front wheel speed sensors. Clear the computer fault memory.
Switch off the ignition. Switch the ignition back on and carry out a road test.
If the fault initially declared **DF090 "Front right wheel target"** has become a present **DF091 "Left front wheel target"**, replace the wheel speed sensor.
If the fault stays on the same side, the target is faulty, replace the active sensor bearing.

AFTER REPAIR	Clear the computer fault memory. Carry out a road test followed by another check with the diagnostic tool.

GETtheMANUALS.org

DF091 STORED	FRONT LEFT-HAND WHEEL TARGET

NOTES	**Priorities when dealing with a number of faults:** Deal with fault **DF006 Front left wheel speed sensor circuit** first if it is present.
	Conditions for applying the fault finding procedure to stored faults: The fault is declared present during a road test (in excess of **12 mph (20 km/h)** for **2 minutes**).

Check the condition of the axles (impacts, damage, etc.) and the conformity and good condition of the tyres.
Check that the braking system (condition of brake pads, sealing, sticking, bleed, bearing clearance, etc.) is in good condition.

Visually inspect the condition of the target (for clogging, metallic contamination, bearing grease, etc.) and clean using compressed air if necessary.
If there is a lot of grease on the target, contact the Techline.
Check the quality of the mounting of the wheel speed sensor (correct clipping without excessive play).
Check the conformity of the target (condition, number of teeth = **48**) using the special command **SC001 Check target teeth**.

Check the connection and the condition of the sensor connectors.
Carry out a visual check of the sensor wiring and check that the connections on the **26-track computer connector** are in good condition.

If all the checks are in order, swap the 2 front wheel speed sensors. Clear the computer fault memory.
Switch off the ignition. Switch the ignition back on and carry out a road test.
If the fault initially declared **DF091 "Left front wheel target"** has become a present **DF090 "Front right wheel target"**, replace the wheel speed sensor.
If the fault stays on the same side, the target is faulty, replace the active sensor bearing.

AFTER REPAIR	Clear the computer fault memory. Carry out a road test followed by another check with the diagnostic tool.

GETtheMANUALS.org

DF092 **STORED**	REAR RIGHT-HAND WHEEL TARGET

NOTES	**Priorities when dealing with a number of faults:** Deal with fault **DF027 right rear wheel speed sensor circuit** first if it is present.
	Conditions for applying the fault finding procedure to stored faults: The fault is declared present during a road test (in excess of **12 mph (20 km/h)** for **2 minutes**).

Check the condition of the axles (impacts, damage, etc.) and the conformity and good condition of the tyres.
Check that the braking system (condition of brake pads, sealing, sticking, bleed, bearing clearance, etc.) is in good condition.

Visually inspect the condition of the target (for clogging, metallic contamination, bearing grease, etc.) and clean using compressed air if necessary.
If there is a lot of grease on the target, contact the Techline.
Check that the wheel speed sensor mounting is in good condition.
Check the sensor/target air gap through one revolution of the wheel: **0.3 mm < rear wheel air gap < 1.3 mm**.
Check the conformity of the target (condition, number of teeth = **48**) using the special command **SC001 Check target teeth**.

Check the connection and the condition of the sensor connectors.
Carry out a visual check of the sensor wiring and check that the connections on the **26-track computer connector** are in good condition.

If all the checks are in order, swap the 2 rear wheel speed sensors. Clear the computer fault memory.
Switch off the ignition. Switch the ignition back on and carry out a road test.
If the fault initially declared **DF092 "Offside rear wheel target"** has become a present **DF093 "Nearside rear wheel target"**, replace the wheel speed sensor.
If the fault remains on the same side, the target is defective; replace the rear right-hand disk-hub-bearing assembly (see **MR353 Mechanical, 33A, Rear axle components**).

AFTER REPAIR	Clear the computer fault memory. Carry out a road test followed by another check with the diagnostic tool.

GETtheMANUALS.org

DF093 STORED	REAR LEFT-HAND WHEEL TARGET

NOTES	**Priorities when dealing with a number of faults:** Deal with fault **DF007 "Rear left-hand wheel speed sensor circuit"** first if it is present.
	Conditions for applying the fault finding procedure to stored faults: The fault is declared present during a road test (in excess of **12 mph (20 km/h)** for **2 minutes**).

Check the condition of the axles (impacts, damage, etc.) and the conformity and good condition of the tyres.
Check that the braking system (condition of brake pads, sealing, sticking, bleed, bearing clearance, etc.) is in good condition.

Visually inspect the condition of the target (for clogging, metallic contamination, bearing grease, etc.) and clean using compressed air if necessary.
If there is a lot of grease on the target, contact the Techline.
Check that the wheel speed sensor mounting is in good condition.
Check the sensor/target air gap through one revolution of the wheel: **0.3 mm < rear wheel air gap < 1.3 mm**.
Check the conformity of the target (condition, number of teeth = **48**) using the special command **SC001 Check target teeth**.

Check the connection and the condition of the sensor connectors.
Carry out a visual check of the sensor wiring and check that the connections on the **26-track computer connector** are in good condition.

If all the checks are in order, swap the 2 rear wheel speed sensors. Clear the computer fault memory.
Switch off the ignition. Switch the ignition back on and carry out a road test.
If the fault initially declared **DF093 "Nearside rear wheel target"** has become a present **DF092 "Offside rear wheel target"**, replace the wheel speed sensor.
If the fault remains on the same side, the target is defective; replace the rear left-hand disk-hub-bearing assembly (see **MR353 Mechanical, 33A, Rear axle components**).

AFTER REPAIR	Clear the computer fault memory. Carry out a road test followed by another check with the diagnostic tool.

GETtheMANUALS.org

DF096 PRESENT	COMPUTER INTERNAL ELECTRONIC IRREGULARITY

NOTES	None

Clear the fault memory using the diagnostic tool and switch off the ignition.
If the fault is still present, contact the Techline.

AFTER REPAIR	Clear the computer fault memory. Carry out a road test followed by another check with the diagnostic tool.

GETtheMANUALS.org

DF097 PRESENT OR STORED	NO AUTOMATIC TRANSMISSION MULTIPLEX SIGNAL

NOTES	**Special note:** although it is stored in the computer's memory, this fault does not cause warning lights to illuminate or generate a fault message because the **ESP** system is not defective. Perform fault finding on the **automatic transmission** using the diagnostic tool. Note: **When the fault in the automatic transmission system is repaired, clear the ESP system fault memory.**
	Order of priority when dealing with a combination of faults: deal first with fault **DF152 Multiplex network (BUS OFF)** if it is present or stored.
	Conditions for applying the fault finding procedure to stored faults: The fault is declared present when the engine is started up.

Check the gearbox type configuration with the diagnostic tool, using command **LC008 Gearbox type**.
If the configuration is not correct, configure the gearbox type present on the vehicle using configuration command **CF079 Gearbox type**.

Carry out a multiplex network test and check the **automatic transmission** with the diagnostic tool.
If the fault is still present, contact the Techline.

AFTER REPAIR	Clear the computer fault memory. Carry out a road test followed by another check with the diagnostic tool.

GETtheMANUALS.org

DF098 PRESENT OR STORED	NO UCH MULTIPLEX SIGNAL

NOTES	**Special note:** although it is stored in the computer's memory, this fault does not cause warning lights to illuminate or generate a fault message because the **ESP** system is not defective. Perform fault finding on the **UCH** with the diagnostic tool. Note: **When the fault in the UCH is repaired, clear the ESP system fault memory.**
	Order of priority when dealing with a combination of faults: deal first with fault **DF152 Multiplex network (BUS OFF)** if it is present or stored.
	Conditions for applying the fault finding procedure to stored faults: The fault is declared present when the engine is started up.

Carry out a multiplex network test and check the **UCH** with the diagnostic tool.
If the fault is still present, contact the Techline.

AFTER REPAIR	Clear the computer fault memory. Carry out a road test followed by another check with the diagnostic tool.

GETtheMANUALS.org

DF099 PRESENT	PRIVATE MULTIPLEX NETWORK

NOTES	**Special note:** the computer has detected more than 15 error frames on the private multiplex network.

Measure the resistance of the private multiplex network between **tracks 2 and 3** on the steering wheel angle sensor connector.
Is the resistance 60 Ω ± 10 Ω?

NO

120 Ω

Check the condition and connections of the ESP computer and combined sensor connectors.
Check the continuity of the connections between:

ESP computer connector **track 15**	→	**track 2** steering wheel angle sensor connector
ESP computer connector **track 17**	→	**track 3** steering wheel angle sensor connector
Steering wheel angle sensor connector **track 2**	→	**track 1** combined sensor connector
Steering wheel angle sensor connector **track 3**	→	**track 2** combined sensor connector

Also check the insulation between these connections. Repair if necessary.

The multiplex network terminating resistance of the ESP computer or combined sensor is faulty.
– Measure the terminating resistance of the ESP computer between **tracks 15 and 17** on the computer.
Replace the ESP computer if the resistance is not **120 Ω ± 10 Ω**.
If the resistance is correct, reconnect the ESP computer and disconnect the combined sensor.
– Measure the resistance between **tracks 1 and 2** on the combined sensor.
Replace the combined sensor (see **Replacement of components**) if the resistance is not **120 Ω ± 10 Ω**.

AFTER REPAIR	**After replacing the combined sensor or steering wheel angle sensor, it is imperative to clear the offsets using command RZ008 or RZ007.** Clear the computer fault memory. Carry out a road test followed by another check with the diagnostic tool.

GETtheMANUALS.org

DF099 **CONTINUED 1**	

0 Ω or INFINITE

Check the condition and connections of the ESP computer and combined sensor connectors.
Check the continuity and insulation of the connections between:

ESP computer connector **track 15**	→	**track 2** steering wheel angle sensor connector
ESP computer connector **track 17**	→	**track 3** steering wheel angle sensor connector
Steering wheel angle sensor connector **track 2**	→	**track 1** combined sensor connector
Steering wheel angle sensor connector **track 3**	→	**track 2** combined sensor connector

Also check the insulation between these connections. Repair if necessary.

AFTER REPAIR	**After replacing the combined sensor or steering wheel angle sensor, it is imperative to clear the offsets using command RZ008 or RZ007.** Clear the computer fault memory. Carry out a road test followed by another check with the diagnostic tool.

GETtheMANUALS.org

DF099 **CONTINUED 2**	

YES

This may be a fault inside the ESP computer, combined sensor or steering wheel angle sensor.
To determine which component is at fault, carry out the following tests:

1. Switch off the ignition, disconnect the ESP computer and combined sensor, and switch on the ignition. Using the oscilloscope on Clip technic (procedure as below), measure the signal between **track 15** (**CAN L**, taken as earth reference) and **track 17 (CAN H)** on the **ESP wiring harness** connector.

Note:
If the computer is disconnected, the supply to the combined sensor is off, so it cannot generate multiplex signals.

- **If there is no signal**, replace the steering wheel angle sensor (**see Replacement of components**).
- **If there is a signal**, (**see Fig. 1**, series of signals with an amplitude of **3 V ± 0.5 V**), the steering wheel angle sensor is not defective. Carry out **test 2** on the next page.

AFTER REPAIR	**After replacing the combined sensor or steering wheel angle sensor, it is imperative to clear the offsets using command RZ008 or RZ007.** Clear the computer fault memory. Carry out a road test followed by another check with the diagnostic tool.

GETtheMANUALS.org

DF099 **CONTINUED 3**	

Procedure:
Select the Oscilloscope function.
AUTO regulation.
Time base: 10 ms/div.
Calibre (signal amplitude): 1 V/div.

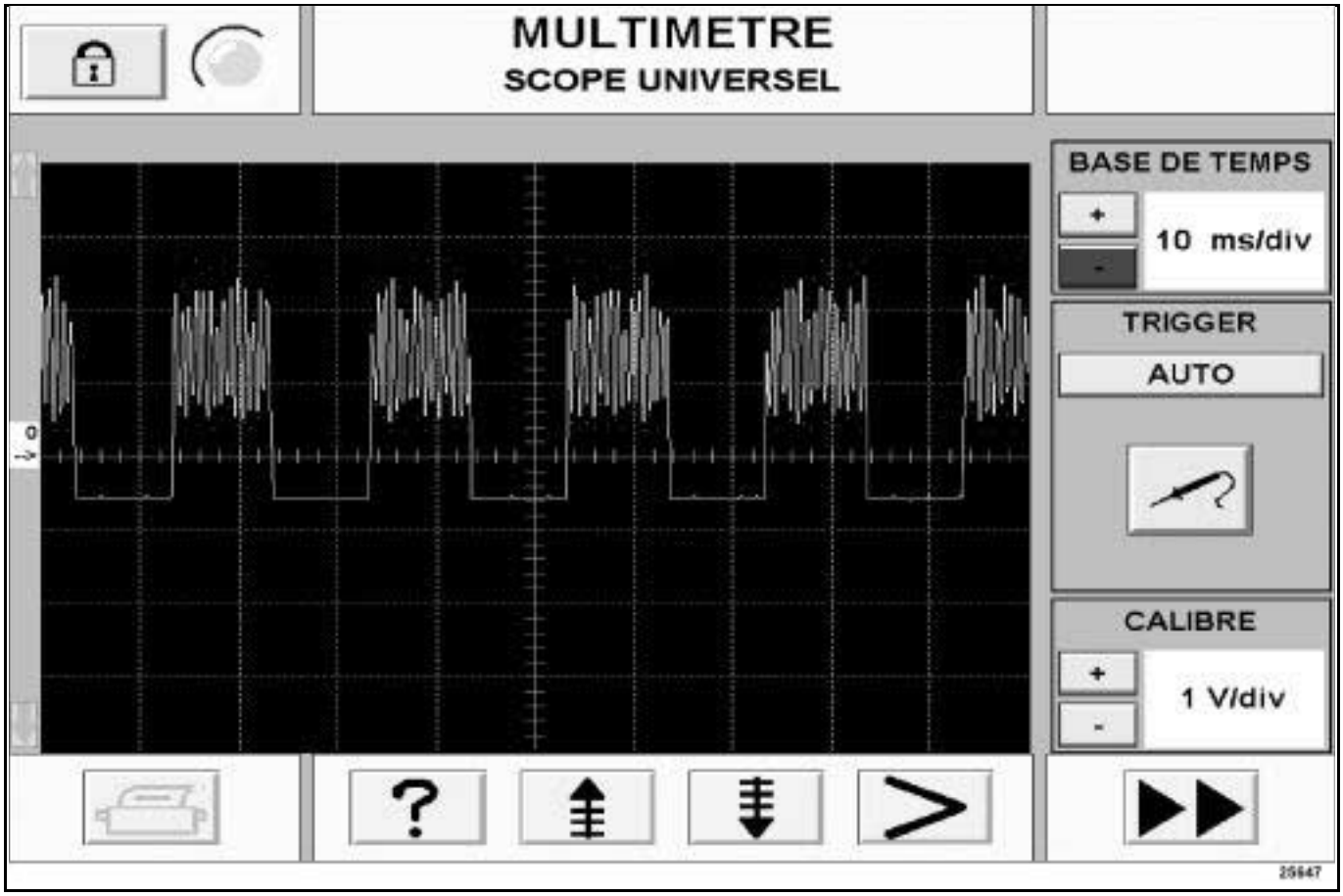

FIG. 1

AFTER REPAIR	**After replacing the combined sensor or steering wheel angle sensor, be sure to clear the offsets using command RZ008 or RZ007.** Clear the computer fault memory. Carry out a road test followed by another check with the diagnostic tool.

GETtheMANUALS.org

DF099 **CONTINUED 4**	

2. Switch off the ignition, reconnect the ESP computer and disconnect the combined sensor and steering wheel angle sensor, then switch on the ignition. Using the oscilloscope on the Clip technic (procedure below), measure the signal between **track 2** (**CAN L**, taken as earth reference) and **track 3 (CAN H)** on the steering wheel angle sensor connector.

- **If there is no signal**, replace the ESP computer.
- **If there is a signal**, (**See Fig 2**, sequence of signals with amplitude **2 V ± 0.3 V**), the ESP computer is not defective; replace the combined sensor (**see Replacement of components**) and carry out **TEST 3**.

Procedure:
Select the Oscilloscope function.
AUTO regulation.
Time base: 500 µs/div.
Calibre (signal amplitude): 1 V/div.

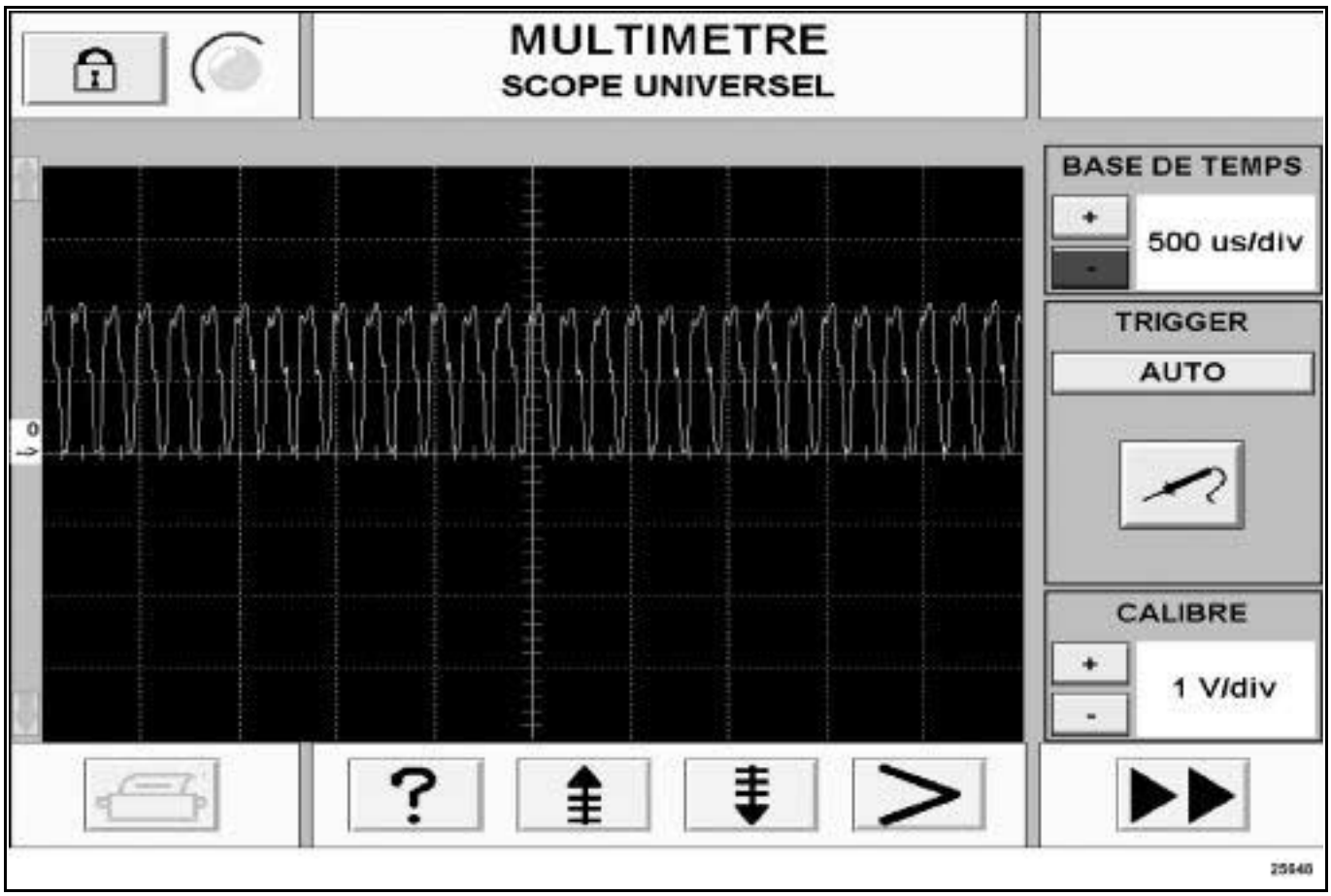

FIG. 2

AFTER REPAIR	**After replacing the combined sensor or steering wheel angle sensor, be sure to clear the offsets using command RZ008 or RZ007.** Clear the computer fault memory. Carry out a road test followed by another check with the diagnostic tool.

GETtheMANUALS.org

DF099 **CONTINUED 5**	

3. To confirm system repair, switch off the ignition, reconnect the combined sensor and disconnect the steering wheel angle sensor then switch on the ignition.
Using the oscilloscope on the Clip technic (procedure below), measure the signal between **track 2** (**CAN L**, taken as earth reference) and **track 3 (CAN H)** on the steering wheel angle sensor connector.

– **See the correct signal in FIGURE 3**

Procedure:
Select the Oscilloscope function.
AUTO regulation.
Time base: 5 ms/div.
Calibre (signal amplitude): 1 V/div.

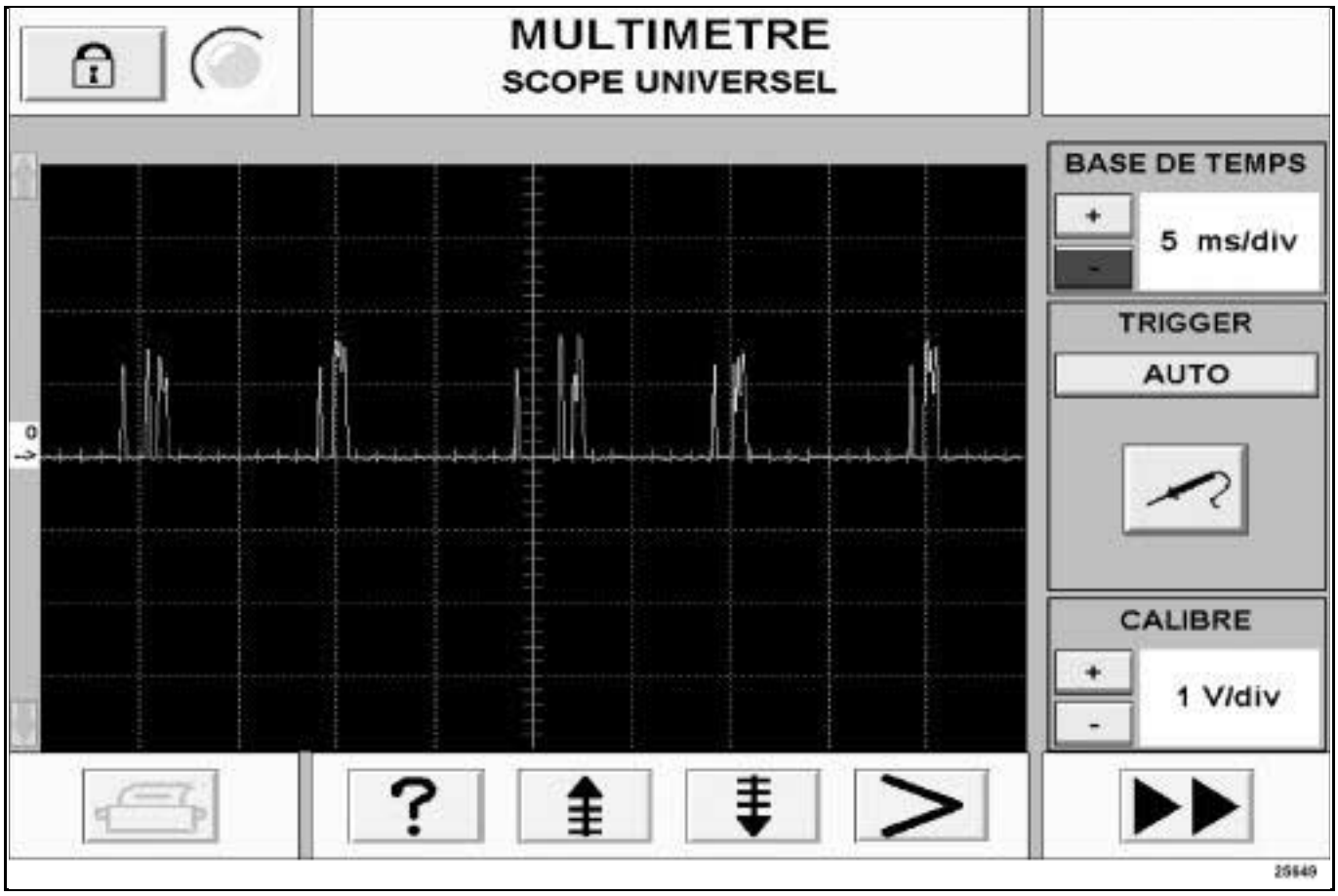

FIG. 3

AFTER REPAIR	**After replacing the combined sensor or steering wheel angle sensor, be sure to clear the offsets using command RZ008 or RZ007.** Clear the computer fault memory. Carry out a road test followed by another check with the diagnostic tool.

GETtheMANUALS.org

DF104 PRESENT	COMBINED SENSOR INTERNAL ELECTRONIC IRREGULARITY

NOTES	None

Clear the computer fault memory.
If the fault recurs, replace the combined sensor (**see Replacement of components**) and clear the offset using command **RZ008 Lateral acceleration sensor offset**.

AFTER REPAIR	**After replacing the combined sensor, be sure to clear the offset using command RZ008 "Lateral acceleration sensor offset".** Clear the computer fault memory. Carry out a road test followed by another check with the diagnostic tool.

GETtheMANUALS.org

DF108 PRESENT OR STORED	STEERING WHEEL ANGLE SENSOR 1.DEF: Internal electronic fault

NOTES	**Special note:** Ignore this fault if the vehicle has been on the dynamometer or if a jack has been placed underneath the vehicle without affecting the steering wheel angle although it has generated a vehicle speed. The steering wheel angle sensor tells the computer, via the private CAN, that there is an internal fault.
	Conditions for applying the fault finding procedure to stored faults: Apply the fault finding procedure whether the fault is present or stored.

Make sure that the connector is correctly plugged into the sensor rather than the inert headlight switch support next to the sensor).
Check the condition and correct connection of the steering wheel angle sensor and computer connectors.
Check for **+ After Ignition Feed** on **track 5** and for **earth** on **track 1** of the steering wheel angle sensor connector.
Repair if necessary.

If all the checks are in order, reconnect the computer and the steering wheel angle sensor, then clear the computer fault memory.
Exit the fault finding procedure and carry out a road test.
Replace the sensor (**see Replacement of components**) if the fault recurs and clear the offset using command **RZ007 Steering wheel angle sensor offset**.

AFTER REPAIR	**After replacing the steering wheel angle sensor, be sure to clear the offset using command RZ007 Steering wheel angle sensor offset.** Clear the computer fault memory. Carry out a road test followed by another check with the diagnostic tool.

GETtheMANUALS.org

DF116 PRESENT	VEHICLE CONFIGURATION PROGRAMMING

NOTES	None

Use command **VP004 "Vehicle parameters"** to define the appropriate vehicle type variant.
Clear the computer fault memory, exit the diagnostic and switch off the ignition.
Switch on the ignition again and carry out a new check using the diagnostic tool.
If the fault is still present, contact the Techline.

AFTER REPAIR	Clear the computer fault memory. Carry out a road test followed by another check with the diagnostic tool.

GETtheMANUALS.org

DF119 PRESENT	GEARBOX TYPE CONFIGURATION (consistency between computer configuration and multiplex network signals)

NOTES	**Priorities when dealing with a number of faults:** Deal with fault **DF097 "No automatic transmission multiplex signal"** first if it is present.

Read **LC008 Gearbox type**, and use command **CF079 Gearbox type** to define the gearbox type present on the vehicle.
Clear the computer fault memory, exit the diagnostic and switch off the ignition.
Switch on the ignition again and carry out a new check using the diagnostic tool.
If the fault is still present, contact the Techline.

AFTER REPAIR	Clear the computer fault memory. Carry out a road test followed by another check with the diagnostic tool.

GETtheMANUALS.org

DF121 PRESENT OR STORED	TORQUE REQUESTED NOT AVAILABLE

NOTES	**Special note:** although stored in the ESP computer, this fault is caused by injection components, not ESP components. Run fault finding on the injection system. **Note:** the injection computer does not always store these transient faults as quickly as the ESP computer. If there are no stored faults in the injection computer memory, start the engine; if no present faults appear, contact your Techline. Once the fault in the injection system has been repaired, clear the ESP computer fault memory. The injection computer cannot achieve the torque setting requested by the ESP.
	Conditions for applying the fault finding procedure to stored faults: The fault is declared present during a road test.

Run fault finding on the injection system.
If the fault is still present, contact the Techline.

AFTER REPAIR	Clear the computer fault memory. Carry out a road test followed by another check with the diagnostic tool.

GETtheMANUALS.org

DF125 PRESENT	COMBINED SENSOR SUPPLY 1.DEF: Feed voltage too low 2.DEF: Feed voltage too high 3.DEF: Voltage outside tolerance

NOTES	**Priorities when dealing with a number of faults:** Deal first with fault **DF104 Combined sensor internal electronic fault** if it is present.

Check the connection and condition of the combined sensor and computer connectors.
Switch on the ignition and check for the **+ after ignition feed** between **tracks 3 and 5** of the sensor connector.
– If the voltage is correct, replace the combined sensor (**see Replacement of components**) and clear the offset using command **RZ008 Lateral acceleration sensor offset**.

Check and ensure continuity and the insulation of the connections between:

Sensor connector Track 3 ⟶ **Track 4 computer connector**

Sensor connector Track 5 ⟶ **Track 10 computer connector**

Also check the insulation between these connections.

If the fault is still present, contact the Techline.

AFTER REPAIR	**After replacing the combined sensor, it is imperative to clear the offset using command RZ008 Lateral acceleration sensor offset.** Clear the computer fault memory. Carry out a road test followed by another check with the diagnostic tool.

GETtheMANUALS.org

DF152 **STORED**	MULTIPLEX NETWORK. (BUS OFF)

NOTES	**Special instructions:** If several computers are affected by a similar multiplex network fault, contact the Techline first to check previously reported cases.
	Conditions for applying the fault finding procedure to stored faults: Apply the fault finding procedure as below.

If no other computer has detected a fault on the multiplex network, but only the absence of **ESP** frames, carry out the following checks:
– check the connection and condition (oxidisation, bent terminal, crimping, etc.) of the computer connectors (**tracks 21 and 23**).
Repair if necessary.

Check the continuity, insulation and absence of interference resistance between:

Computer connector **track 21** → **Track 14** of the **diagnostic socket** connector

Computer connector **track 23** → **Track 6** of the **diagnostic socket** connector

Also check the insulation between these 2 connections. Repair or replace the wiring if necessary.
If the fault is still present, run fault finding on the multiplex network.

AFTER REPAIR	Clear the computer fault memory. Carry out a road test followed by another check with the diagnostic tool.

GETtheMANUALS.org

DF155 PRESENT OR STORED	ELECTRONIC STABILITY PROGRAM FUNCTION

NOTES	**Special notes:** The fault is stored if an ESP regulation with the brakes applied lasts over **15 seconds** without trajectory correction. This fault may appear if the vehicle is driven on a speed circuit with banking turns. Major modification of the vehicle chassis may result in unwanted long ESP regulations leading to this fault.
	Conditions for applying the fault finding procedure to stored faults: Apply the fault finding procedure as below.

Check that the combined sensor is fitted the right way round on its plate, is in good condition and correctly tightened to 8 Nm and check the mounting of the plate on the floor (under the centre console behind the gear lever).
Check the connection and condition of the combined sensor connector.
Check that the connections, type and location of any special equipment (CB, Car phone, Amplifier, Bass loudspeaker (subwoofer type), etc.) do not disturb ESP operation.

Check the condition of the axles (impacts, deformations, clearances etc.), and the conformity and condition of the tyre fitting.
Check the vehicle chassis (wheel alignment, shock absorbers, etc.).

– Check the connection and condition of the steering wheel angle sensor, combined sensor and computer connectors.
– Check for continuity and insulation on the wiring between the computer, the steering wheel angle sensor and the combined sensor.
– Check **PR033 "Steering wheel angle"** with the wheels straight.

Clear the steering wheel angle sensor and lateral acceleration sensor offsets using commands **RZ007 Steering wheel angle sensor offset and RZ008 Lateral acceleration sensor offset**.

AFTER REPAIR	Clear the computer fault memory. Carry out a road test followed by another check with the diagnostic tool.

GETtheMANUALS.org

DF188 PRESENT OR STORED	BRAKE LIGHT SWITCH CIRCUIT 1.DEF: Signal inconsistent

NOTES	**Conditions for applying the fault finding procedure to stored faults:** Clear the stored fault, carry out a road test at a speed of > **36 mph (60 km/h)** and test the brakes using **ABS**. Use the interpretation of the fault if it recurs.
	Special note: the fault is detected if the computer does not detect a brake lights switch status change in 4 acceleration/braking cycles, and/or if the contact is closed for more than 6 minutes with the vehicle speed above 24 mph (40 km/h).

Using the diagnostic tool, check on the statuses screen that **ET017 Brake pedal** recognises the depressed and released positions of the brake pedal.
If the pedal position is not detected, use the interpretation of **ET017**.

If the fault is still present, contact the Techline.

AFTER REPAIR	Clear the computer fault memory. Carry out a road test followed by another check with the diagnostic tool.

GETtheMANUALS.org

DF191 PRESENT	ESP ON/OFF BUTTON CIRCUIT

NOTES	None

Apply the interpretation of status **ET023 ESP on/off button**.

AFTER REPAIR	Clear the computer fault memory. Carry out a road test followed by another check with the diagnostic tool.

GETtheMANUALS.org

DF203 PRESENT OR STORED	COMBINED SENSOR MULTIPLEX SIGNALS 1.DEF: Signal not available

NOTES	**Priorities when dealing with a number of faults:** If faults **DF203 and DF099** are combined, deal first with fault **DF099 Private multiplex network**. If faults **DF203 and DF125** are combined, deal first with fault **DF125 Combined sensor supply**. If faults **DF203 and DF104** are combined, deal first with fault **DF104 Combined sensor internal electronic fault**.
	Special note: The computer has detected over 15 error frames on the private multiplex network.
	Conditions for applying the fault finding procedure to stored faults: The fault is declared present when the engine is started up.

Check that the combined sensor is fitted the right way round on its plate, is in good condition and correctly tightened to 8 Nm and check the mounting of the plate on the floor (under the centre console behind the gear lever).
Check the connection and condition of the combined sensor connector.
Check that the connections, type and location of any special equipment (CB, Car phone, Amplifier, Bass loudspeaker (subwoofer type), etc.) do not disturb ESP operation.

Apply the fault finding procedure described in **DF099 Private multiplex network**.
If the fault recurs, contact the Techline.

AFTER REPAIR	**After replacing the combined sensor, it is imperative to clear the offset using command RZ008 Lateral acceleration sensor offset.** Clear the computer fault memory. Carry out a road test followed by another check with the diagnostic tool.

GETtheMANUALS.org

DF215 PRESENT OR STORED	LATERAL ACCELERATION PROGRAMMING OFFSET

NOTES	**Priorities when dealing with a number of faults:** If faults **DF215 and DF104** are combined, deal first with fault **DF104 Combined sensor internal electronic fault**.
	Conditions for applying the fault finding procedure to stored faults: The fault is stored if the calculated offset exceeds **1.7 m/s^2**.

Check that the combined sensor is fitted the right way round on its plate, is in good condition and correctly tightened to 8 Nm and check the mounting of the plate on the floor (under the centre console behind the gear lever).
Check the connection and condition of the combined sensor connector.
Check that the connections, type and location of any special equipment (CB, Car phone, Amplifier, Bass loudspeaker (subwoofer type), etc.) do not disturb ESP operation.

– Read the lateral acceleration sensor offset value **PR016 Lateral acceleration programming offset"**.
If the value is over 1.7 m/s^2, replace the combined sensor (**see Replacement of components**) and clear the offset using command **RZ008 "Lateral acceleration sensor offset"**.
If the value is below 1.7 m/s^2, clear the lateral acceleration offset using command **RZ008 Lateral acceleration sensor offset**.
Switch off the ignition, then switch it on again and carry out a road test followed by another check with the diagnostic tool.
If the fault recurs, contact the Techline.

AFTER REPAIR	**After replacing the combined sensor, it is imperative to clear the offset using command RZ008 Lateral acceleration sensor offset.** Clear the computer fault memory. Carry out a road test followed by another check with the diagnostic tool.

GETtheMANUALS.org

DF216 PRESENT OR STORED	STEERING WHEEL ANGLE PROGRAMMING OFFSET

NOTES	**Special notes:** The signal supplied by the steering wheel angle sensor is not consistent with the steering wheel angle recalculated using the wheel speeds, the lateral acceleration and yaw rate. **This fault can be recognised with the ignition on by manipulating the sensor without it being mounted on the steering column (value in excess of ± 720°)**.
	Conditions for applying the fault finding procedure to stored faults: Apply the fault finding procedure whether the fault is present or stored.

Set the wheels straight ahead and in the **Electronic stability program** function on the diagnostic tool, read **PR033 Steering wheel angle**.

– **If, - 10° < PR033 < 10°**, use the diagnostic tool to clear the sensor offset with clear command **RZ007 Steering wheel angle sensor offset**.

Switch off the ignition and carry out a road test followed by another check with the diagnostic tool.

– If **PR033** is outside **- 10° < PR033 < 10°**, check that the steering wheel angle sensor is correctly fitted and positioned on the steering column and carry out a complete axle geometry check.

Use the diagnostic tool to clear the sensor offset with the clear command **RZ007 Steering wheel angle sensor offset**.
Switch off the ignition and carry out a road test followed by another check with the diagnostic tool.

If the fault is still present replace the steering wheel angle sensor (**see Replacement of components**) and clear the offset using clear command **RZ007 Steering wheel angle sensor offset**.

AFTER REPAIR	**After replacing the steering wheel angle sensor, be sure to clear the offset using command RZ007 Steering wheel angle sensor offset.** Clear the computer fault memory. Carry out a road test followed by another check with the diagnostic tool.

GETtheMANUALS.org

DF218 PRESENT OR STORED	PRESSURE SENSOR PROGRAMMING OFFSET

NOTES	**Conditions for applying the fault finding procedure to stored faults:** The fault is declared present when the engine is started up.

Clear the computer fault memory.
– Read the brake pressure sensor offset value **PR017 Pressure sensor programming offset**.
If the value is above **15 bar**, clear the offset using command **RZ009 Brake pressure sensor offset**.
If the value is between **11 bar and 15 bar**, separate the computer from the hydraulic unit to check the cleanliness of the contacts: the 4 springs on the computer side and the 4 contacts facing them on the pressure sensor.
Repair if necessary.

Reread the value of **PR017**.
If the value is still between **11 bar and 15 bar** inclusive, replace the entire hydraulic unit.

AFTER REPAIR	**The pressure sensor is incorporated in the computer. If the pressure sensor is defective: change the complete hydraulic unit.** Clear the computer fault memory. Carry out a road test followed by another check with the diagnostic tool.

GETtheMANUALS.org

DF219 PRESENT OR STORED	ABS MULTIPLEX SIGNALS CONSISTENCY

NOTES	**Special note:** although stored in the computer, the **ESP** system is not defective. The **ESP** is deactivated due to unusable injection signals. Perform fault finding on the injection system using the diagnostic tool. Note: The injection does not always store these transient faults as quickly as the **ESP system**. If no fault is stored in the injection computer, start the engine; if there is no fault present, contact the Techline. **Once the fault in the injection system has been repaired, clear the ESP computer fault memory.**
	Conditions for applying the fault finding procedure to stored faults: The fault is declared present when the engine is started up.

Run fault finding on the injection system.
If the fault is still present, contact the Techline.

AFTER REPAIR	Clear the computer fault memory. Carry out a road test followed by another check with the diagnostic tool.

GETtheMANUALS.org

DF220 PRESENT	HYDRAULIC UNIT TEMPERATURE SENSOR CIRCUIT 1.DEF: Signal inconsistent

NOTES	**Special note:** The computer has detected a discrepancy between 2 temperature measurements of over **6 °C in 1 second**.

Clear the computer fault memory.
– Separate the computer from the hydraulic unit to check the cleanliness of the contacts: the 4 springs on the computer side and the 4 contacts facing them on the pressure sensor.

If the fault recurs, replace the entire hydraulic unit.

AFTER REPAIR	Clear the computer fault memory. Carry out a road test followed by another check with the diagnostic tool.

GETtheMANUALS.org

DF221 PRESENT	STEERING WHEEL ANGLE SENSOR MULTIPLEX SIGNALS 1.DEF: Signal not available

NOTES	**Priorities when dealing with a number of faults:** If there is a combination of faults **DF221 and DF099**, deal with fault **DF099** first.
	Special note: the computer has received invalid multiplex frames from the steering wheel angle sensor.

Check that the connector is correctly connected to the sensor and not to the inert headlight switch support next to the sensor. Check the condition and correct connection of the steering wheel angle sensor and computer connectors. Check for **+ After Ignition Feed** on **track 5** and for **earth** on **track 1** of the steering wheel angle sensor connector. Repair if necessary.
Use the interpretation of **DF099 Private multiplex network**. If the fault recurs, contact the Techline.

AFTER REPAIR	Clear the computer fault memory. Carry out a road test followed by another check with the diagnostic tool.

GETtheMANUALS.org

DF224 PRESENT	ESP FUNCTION DEACTIVATED

NOTES	**Conditions for applying the fault finding procedure to stored faults:** The fault is declared present when the ignition is switched on.
	Special note: This fault is stored only if the "**Electronic stability program**" functions are deliberately disconnected using the diagnostic.

If this fault appears contact Techline.

AFTER REPAIR	Clear the computer fault memory. Carry out a road test followed by another check with the diagnostic tool.

GETtheMANUALS.org

DF225 PRESENT	ESP AND TRACTION CONTROL FUNCTIONS DEACTIVATED

NOTES	**Special note:** This fault is stored only if the "**Electronic stability program**" functions are deliberately disconnected using the diagnostic.

If this fault appears contact Techline.

AFTER REPAIR	Clear the computer fault memory. Carry out a road test followed by another check with the diagnostic tool.

GETtheMANUALS.org

DF226 STORED	STEERING WHEEL ANGLE SENSOR INITIALISATION

NOTES	**Priorities when dealing with a number of faults:** Deal with faults **DF080, DF084, DF104, DF125, DF203, DF215, DF227** first if they are present (combined sensor faults). **Conditions for applying the fault finding procedure to stored faults:** The fault is declared as present following a road test at a vehicle speed greater than **60 mph (100 km/h)**. **Special notes:** The steering wheel angle sensor needs to be initialised (woken) each time the **+ After Ignition Feed** is activated. Initialisation involves turning the steering wheel through at least **4**°. This fault may appear if this initialisation has not been carried out, and the vehicle has been driven at over **60 mph (100 km/h)** or after a micro-break on the supply when driving. Due to a local micro-break, the sensor alters its function. This causes "non-initialisation" of the steering wheel angle sensor.

Check that the steering wheel angle sensor is correctly fitted on the steering column control unit.
Check that the connector is correctly connected to the sensor and not to the inert headlight switch support next to the sensor.
Check the condition and correct connection of the steering wheel angle sensor and computer connectors.
Switch on the ignition and check for the **+ After ignition feed** between **tracks 5 and 1** of the steering wheel angle sensor connector:
– If the voltage is incorrect:
Check the condition and positioning of the steering wheel angle sensor **5A** supply fuse in the Passenger Compartment Fuse and Relay Box.
Check and ensure continuity and insulation of the following connections:

Sensor connector Track 1	→	**Vehicle earth**
Sensor connector Track 5	→	**Track 4 (5A sensor feed fuse) passenger compartment fuse and relay box black connector**

Also check the insulation between these connections.

– If the voltage is correct but the fault is still present after clearing the computer's fault memory:
Replace the steering wheel angle sensor (**see Replacement of components**) and clear the sensor offset using clear command **RZ007 Steering wheel angle sensor offset**.

AFTER REPAIR	**After replacing the steering wheel angle sensor, be sure to clear the offset using command RZ007 Steering wheel angle sensor offset.** Clear the computer fault memory. Carry out a road test followed by another check with the diagnostic tool.

GETtheMANUALS.org

DF227 PRESENT	COMBINED SENSOR INITIALISATION

NOTES	**Priorities when dealing with a number of faults:** If faults **DF227 and DF104** are combined, deal first with fault **DF104 Combined sensor internal electronic fault**.

Check the connection and condition of the combined sensor and computer connectors.
Switch on the ignition and check for the **+ after ignition feed** between **tracks 3 and 5** of the sensor connector.

– If the voltage is correct, replace the combined sensor (**see Replacement of components**) and clear the offset using command **RZ008 Lateral acceleration sensor offset**.

Check and ensure continuity and the insulation of the connections between:

Sensor connector Track 3 ⟶ **Track 4 computer connector**

Sensor connector Track 5 ⟶ **Track 10 computer connector**

Also check the insulation between these connections.

If the fault is still present, contact the Techline.

AFTER REPAIR	**After replacing the combined sensor, be sure to clear the offset using command RZ008 "Lateral acceleration sensor offset".** Clear the computer fault memory. Carry out a road test followed by another check with the diagnostic tool.

GETtheMANUALS.org

DF229 to DF232 PRESENT OR STORED	WHEEL SPEEDS

NOTES	**Conditions for applying the fault finding procedure to stored faults:** The fault is declared present during a road test (in excess of **12 mph (20 km/h)** for **2 minutes**).

Check the condition of the axles (impacts, damage, etc.) and the conformity and good condition of the tyres.
Check that the braking system (condition of brake pads, sealing, sticking, bleed, bearing clearance, etc.) is in good condition.

Visually inspect the condition of the target (for clogging, metallic contamination, bearing grease, etc.) and clean using compressed air if necessary.
If there is a lot of grease on the target, contact the Techline.
Check the quality of the wheel speed sensor mounting (for the front wheels: correct clipping without excessive play).
Check the sensor/target air gap through one revolution of the rear wheels: **0.3 mm < rear wheel air gap < 1.3 mm**.
Check the conformity of the target (condition, number of teeth = **48**) using the special command **SC001 Check target teeth**.

Check the connection and the condition of the sensor connectors.
Visually inspect the sensor wiring and check the quality of the connections on the **26 track** computer connector.

AFTER REPAIR	Clear the computer fault memory. Carry out a road test followed by another check with the diagnostic tool.

GETtheMANUALS.org

DF248 PRESENT	CHASSIS WEAR COMPENSATION FUNCTION INHIBITED

NOTES	**Stored fault fault finding conditions:** this fault appears after deliberate inhibition of the function by **VP030 Chassis wear programming**.

The Chassis wear compensation function must be active.
The function must only be inhibited according to an instruction in a Technical Note.
Check the configuration using **LC016 Chassis wear programming**.
If **LC016 Chassis wear programming** is **INACTIVE**, use the **VP030 Chassis wear programming** setting to activate the function.

If the fault is still present, contact the Techline.

AFTER REPAIR	Clear the computer fault memory. Carry out a road test followed by another check with the diagnostic tool.

GETtheMANUALS.org

DF250 **DF251** **DF252** **DF253** **DF254** **PRESENT** **OR** **STORED**	ENGINE SPEED MULTIPLEX SIGNAL EFFECTIVE ENGINE TORQUE MULTIPLEX SIGNAL TORQUE REQUEST MULTIPLEX FEEDBACK SIGNAL CALCULATED TORQUE MULTIPLEX SIGNAL RESISTING TORQUE MULTIPLEX SIGNAL

NOTES	**Special note:** although stored in the computer, the **ESP** system is not defective. The **ESP** is deactivated due to unusable injection signals. Perform fault finding on the injection system using the diagnostic tool. Note: The injection does not always store these transient faults as quickly as the **ESP system**. If no fault is stored in the injection computer, start the engine; if there is no fault present, contact the Techline. **Once the fault in the injection system has been repaired, clear the ESP computer fault memory.** **Conditions for applying the fault finding procedure to stored faults:** The fault is declared present when the engine is started up.

Run fault finding on the injection system.
If the fault is still present, contact the Techline.

AFTER REPAIR	Clear the computer fault memory. Carry out a road test followed by another check with the diagnostic tool.

GETtheMANUALS.org

NOTES	Only check conformity after a complete check using the diagnostic tool.

Order	Function	Parameter or Status checked or Action	Display and Notes	Fault finding
1	Diagnostic tool dialogue		**ABS/ESP**	**Apply ALP1**
2	Computer configuration	**PR030:** TACHOMETRIC INDEX	Check that the index entered corresponds to the tyres fitted to the vehicle (see **Clip Help**).	**See Configurations and Programming (VP007).**
3	Brake pedal not depressed detection	**ET017:** BRAKE PEDAL	**Released** status confirmed, brake pedal not depressed	**In the event of a fault, apply interpretation of ET017.**
4	Depressed brake pedal detection	**ET017:** BRAKE PEDAL	**Depressed** status confirmed, depressed brake pedal	**In the event of a fault, apply interpretation of ET017.**

GETtheMANUALS.org

NOTES	Only check conformity after a complete check using the diagnostic tool.

Order	Function	Parameter or Status checked or Action	Display and Notes	Fault finding
5	Detection of Electronic Stability Program activation	**ET023:** ESP on/off BUTTON	**Released** status confirmed, button not pressed	**In the event of a fault, apply interpretation of ET023.**
6	Detection of Electronic Stability Program activation	**ET023:** ESP on/off BUTTON	**Pressed** status confirmed, button pressed and held	**In the event of a fault, apply interpretation of ET023.**
7	Vehicle parameter reading	**PR063:** VEHICLE PARAMETERS	Ensure that the variants match the vehicle undergoing diagnostics. (see **CLIP help**)	**See Configurations and programming (VP004).**
8	Gearbox type reading	**LC008:** GEARBOX TYPE	Check that the gearbox selected corresponds to that fitted on the vehicle.	**See Configurations and programming (CF079).**
9	Hydraulic brake limiting configuration	**LC017:** HYDRAULIC BRAKE LIMITING	Check that the configuration is **only** activated for **F4R turbo and V4Y** engines.	**See Configurations and programming (VP031).**

GETtheMANUALS.org

SUMMARY TABLE OF STATUSES

Tool status	Diagnostic tool title
ET017	Brake pedal
ET023	ESP on/off button
ET030	Automatic brake light lighting

PARAMETER SUMMARY TABLE

Tool parameter	Diagnostic tool title
PR001	Front right-hand wheel speed
PR002	Front left-hand wheel speed
PR003	Rear right-hand wheel speed
PR004	Rear left-hand wheel speed
PR005	Computer feed voltage
PR016	Lateral acceleration programming offset
PR017	Pressure sensor programming offset
PR018	Hydraulic unit temperature
PR030	Tachometric index
PR033	Steering wheel angle
PR034	Yaw angle
PR035	Brake fluid pressure
PR036	Transverse acceleration
PR038	Vehicle speed
PR063	Vehicle parameters
PR066	Steering wheel angle programming offset

GETtheMANUALS.org

ET017	BRAKE PEDAL

NOTES	**Special notes:** Only carry out the checks if the **depressed** and **released** statuses are not consistent with the position of the pedal.

Released STATUS Brake pedal depressed.

If the brake lights are working:
– Check for and ensure continuity on the connection between **track 1** of the brake light switch connector and **track 16** of the computer connector.
If the brake lights are not working:
– Check the condition, mounting and adjustment of the brake light switch. Check the conformity of the fuse and bulbs.
– Check for **+ after ignition feed** on **tracks 2 and 4** on the brake light switch connector.
– Remove the brake light switch and check that it is operating correctly:

	Continuity between tracks	Insulation between tracks
Switch pressed (Brake pedal released)	3 and 4	1 and 2
Switch released (Brake pedal depressed)	1 and 2	3 and 4

– Replace the switch if necessary.

Depressed STATUS brake pedal released.

– Check the condition, mounting and adjustment of the brake light switch. Check the conformity of the fuse and bulbs.
– Remove the brake light switch and check that it is operating correctly:

	Continuity between tracks	Insulation between tracks
Switch pressed (Brake pedal released)	3 and 4	1 and 2
Switch released (Brake pedal depressed)	1 and 2	3 and 4

– Replace the switch if necessary.
– Check for **insulation from 12 V** on the connection between **track 1** of the brake light switch connector and **track 16** of the computer connector.

AFTER REPAIR	Carry out a road test, followed by a check with the diagnostic tool.

GETtheMANUALS.org

ET023	ESP ON/OFF BUTTON

NOTES	**Special notes:** Only carry out the checks if the **pressed** and **released** statuses are not consistent with the position of the button.

button Released STATUS

Check the connection and condition of the ESP on/off button connectors. Repair if necessary.
Check there is no continuity between switch **tracks A2 and B1** in the released position. If there is continuity, replace the switch.
Ensure insulation against earth of the connection between:

Button connector **Track B1** ⟶ **Track 7** computer connector

button Pressed STATUS

Check the connection and condition of the ESP on/off button connectors. Repair if necessary.
Check the continuity between button **tracks A2 and B1** in the pressed position. If there is no continuity, replace the switch.
Check that **Track A2** of the button connector is connected to earth.

AFTER REPAIR	Carry out a road test, followed by a check with the diagnostic tool.

GETtheMANUALS.org

PARAMETERS

PR001: Front right-hand wheel speed.

PR002: Front left-hand wheel speed.

PR003: Rear right-hand wheel speed.

PR004: Rear left-hand wheel speed
These parameters indicate the speed **in mph (km/h)** of each wheel on the vehicle.

PR005: Computer supply.
This parameter indicates in **Volts** only the computer's **+ after ignition feed** supply voltage, rather **than the hydraulic unit power supply.**

PR016: Lateral acceleration programming offset.
This parameter gives the correction made by the ESP on the gross value of the lateral acceleration sensor.

PR017: Pressure sensor programming offset.
This parameter indicates the correction applied by the ESP to the pressure sensor gross value.

PR018: Hydraulic unit temperature.
This parameter indicates the temperature in **°C** of the hydraulic unit.

PR030: Tachometric index.
This parameter specifies the tachometric index entered in the computer for the tyres fitted to the vehicle.

PR033: Steering wheel angle.
This parameter gives the steering wheel angle in **degrees**.

PR034: Yaw angle.
This parameter indicates the yaw angle in **°/s** supplied by the combined sensor. It should be 0 when the vehicle is stationary.

PR035: Brake fluid pressure.
This parameter indicates the brake fluid pressure in the hydraulic unit.

PR036: Transverse acceleration.
This parameter indicates the lateral acceleration in **g** supplied by the combined sensor.
It should be 0 when the vehicle is stationary.

PR038: Vehicle speed.
This parameter indicates the vehicle speed in **mph (km/h)**.

PR063: Vehicle parameters.
This parameter shows whether the configuration (**VP004**) matches the vehicle undergoing fault finding.

PR066: Steering wheel angle programming offset.
This parameter indicates the correction made by the **ESP** to the steering wheel angle sensor gross value.

GETtheMANUALS.org

STATUSES

ET017: Brake pedal.
This status gives the position (depressed or released) of the brake pedal

ET023: ESP On/Off button
This status enables you to check whether the **ESP** On/Off button works. This (**depressed or released**) status is checked by keeping the button pressed.

ET030: Automatic brake light illumination.
This status shows whether automatic brake light illumination is authorised or inhibited with **CSV** (understeer control). The parameters of this status can be modified using commands **VP021** and **VP022** according to the legislation in force in the country concerned.

GETtheMANUALS.org

CLEARING

RZ001: Fault memory.
This command is used for clearing the computer's stored faults.

RZ007: Steering wheel angle sensor offset.
This command reinitialises the steering wheel angle sensor offset. Use this command when replacing the steering wheel angle sensor or after any operation on the axles.

RZ008: Lateral acceleration sensor offset.
This command reinitialises the lateral acceleration sensor offset. Use this command when replacing the combined sensor.

RZ009: Brake pressure sensor offset.
This command reinitialises the brake pressure sensor offset. Use this command only if specified in the fault interpretation or on request by Techline.

ACTIVATION

Using the commands
Before using the commands, check that the battery is well charged.

AC003: Front left-hand wheel solenoid valves.
AC004: Front right-hand wheel solenoid valves.
AC005: Rear left-hand wheel solenoid valves.
AC006: Rear right-hand wheel solenoid valves.
These commands permit a check on the hydraulics of each wheel.

Position the vehicle on a 2-post lift so that the free rotation of the wheels can be checked.
Keep the brake pedal depressed enough to prevent the wheel being tested from being turned by hand (do not brake so hard that the anti-lock function operates).
Select and confirm the command for the wheel in question (e.g. Front left-hand wheel solenoid valve, etc.).
Turn the wheel concerned by hand: 5 braking/releasing cycles should be detected.

AC016: Pump motor test.
This command is used to test the pump motor control circuit.

Select command **AC016 Pump Motor Test**.
The motor must run for **5 seconds**.

GETtheMANUALS.org

ACTUATION (continued)

AC153: Bleed front left-hand wheel.
AC154: Bleed front right-hand wheel.
AC155: Bleed rear left-hand wheel.
AC156: Bleed rear right-hand wheel.
This command must be used only if an extension of brake pedal travel is noted during a road test with **ABS** regulation (the system must have been bled beforehand by the usual procedure).

Follow the procedure described in **MR 355 Mechanical, 38C, Anti-lock braking system**.

AC187: Brake light on relay.
This command is for testing brake light activation by the **ESP** when controlling understeering with sharp deceleration.

AC195: Vehicle speed signal.
This command generates a speed other than **0 mph** on the computer's vehicle speed wire output (**Track 24**) for users of that signal (navigation aid, car radio, sunroof).

Note:
This command has no visible effect on the dashboard speedometer needle.

– **Radio:** Turn on the radio and make sure that the Adjust volume as a function of speed function is active. Run command **AC195**. Check that the volume of the sound increases and then decreases while the command is running.

– **Sunroof:** This command has no visible effect on the sunroof. This command changes the activation threshold of the anti-pinch system (the force required to close the sunroof varies with vehicle speed due to aerodynamic constraints).

AC196: Request to switch on hazard warning lights.
This command sends the **UCH** a request to switch on the hazard warning lights to test their functioning during emergency braking (depending on **UCH** configuration).

SPECIAL COMMANDS

SC001: Check target teeth.
This command tests the integrity of the teeth on each wheel.

Select command **SC001 Check target teeth** and follow the instructions.
The test result should indicate **48 sprockets**.

GETtheMANUALS.org

NOTES	Only refer to these customer complaints after performing a complete check with the diagnostic tool.

FAULTS DETECTED ON BRAKING WITH ABS/BRAKING REGULATION

LOCKING OF ONE OR MORE WHEELS	**ALP2**
PULLING	**ALP3**
WANDERING	**ALP4**
UNEXPECTED ABS OPERATION AT LOW SPEEDS AND SLIGHT PEDAL PRESSURE	**ALP5**
UNEXPECTED ABS OPERATION ON A POOR ROAD SURFACE	**ALP6**
UNEXPECTED ABS OPERATION WHEN SPECIAL FEATURES USED (CAR PHONE, CB, etc.)	**ALP7**
LENGTHENING OF BRAKE PEDAL TRAVEL FOLLOWING ABS (WITH PEDAL RECEDING WHEN ENTERING ABS)	**ALP8**
SPONGY PEDAL	**ALP9**
BRAKE PEDAL VIBRATION	**ALP10**
NOISES FROM THE PUMP, PIPES OR HYDRAULIC UNIT	**ALP11**

OTHER CASES

NO COMMUNICATION WITH THE ABS COMPUTER	**ALP1**

GETtheMANUALS.org

ALP1	No dialogue with the ABS computer

NOTES	**Special note: To run fault finding on the vehicle computers, switch on the ignition in fault finding mode (forced + after ignition feed, see introduction).**

Check that the diagnostic tool is not causing the fault by trying to establish dialogue with a computer on another vehicle. If the tool is not at fault, and dialogue cannot be established with any other computer on the same vehicle, the cause could be a faulty computer interfering on the multiplex network.
Check the battery voltage and carry out the operations necessary to obtain the correct voltage (**9.5 V < battery voltage < 17.5 V**).

Perform fault finding on the multiplex network using the diagnostic tool.

Check that the ABS/ESP fuses are in place (**5 A** fuse on the passenger compartment fuse board) and in the engine compartment (**20 A and 40 A**) and in good condition.
Check that the computer connector is properly connected and check the condition of its connections.
Check the ABS/ESP earths (quality, oxidation, sealing of sheath on the earth bolt terminal above the ABS/ESP assembly).
Check that the supply to the computer is correct:

- **Earth on tracks 13 and 26** of the 26 track connector.
- **+ before ignition feed on tracks 1 and 14** of the 26 track connector.
- **+ after ignition feed on track 20** of the 26 track connector.

Ensure that the supply to the diagnostic socket is correct:

- **+ before ignition feed on track 16.**
- **+ after ignition feed on track 1.**
- **Earth connection on tracks 4 and 5.**

If dialogue has still not been established after these checks, contact Techline.

AFTER REPAIR	Clear the computer memory. Carry out a road test followed by another check with the diagnostic tool.

GETtheMANUALS.org

ALP2	Locking of one or more wheels

NOTES	Only consult this customer complaint after a complete check with the diagnostic tool.

Reminder: Locking of wheels on a vehicle fitted with ABS, or squealing of the tyres, which feels like locking to the customer, may be linked to normal operation of the system and should not always be considered a fault:
- Locking is allowed below **4 mph (6 km/h)** (system regulation will not be activated).
- Braking with ABS on very poor roads (significant squealing).
- ----------

However, if there is actually wheel locking, lift the vehicle in order to be able to rotate the wheels and check:
- Possible inversion when connecting the speed sensors.
  Using parameters **PR001, PR002, PR003 and PR004**, rotate the wheels slowly and check the consistency of the results obtained.
  If the value measured is zero, rotate the other wheels to confirm an electrical inversion of the sensors and repair the wiring harness.
- Possible inversion of pipes on the hydraulic unit.
  Use commands Front left-hand wheel solenoid valves, Front right-hand wheel solenoid valves, Rear left-hand wheel solenoid valves and Rear right-hand wheel solenoid valves while depressing the brake pedal and check for 10 unlocking/locking cycles on the wheel concerned (see **dealing with command modes**). If the 10 cycles are not completed on the wheel being tested (wheel still locked), check whether they are completed on another wheel (if inversion is confirmed: repair).
  If the 10 cycles are not completed on a wheel and the pipes have not been reversed, replace the hydraulic unit.

Check that the sensor holder does not rotate (depending on fitting).
Check the quality of the mounting of the wheel speed sensors (correct clipping for the front wheels).
Check the conformity of the targets: condition, **number of teeth = 48 (using command SC001 Check target teeth)**.
If the fault is still present after these checks, replace the hydraulic unit.

AFTER REPAIR	Clear the computer memory. Carry out a road test followed by another check with the diagnostic tool.

GETtheMANUALS.org

ALP3	Pull

NOTES	Only consult this customer complaint after a complete check with the diagnostic tool.

Disconnect one wheel speed sensor.
Start the engine and check that only the ABS fault warning light comes on. Do not drive the vehicle if the brake fault warning light is also lit, as the brake limiter function is no longer guaranteed to operate correctly.
Carry out a road test with the ABS deactivated.
Is the fault still present under these conditions?

YES →

If the brake pedal travel is relatively long, bleed the brake circuit.
If the travel is normal, check the tyre pressures, the front axle, or for any leaks in the circuit.

NO ↓

Raise the vehicle so that you can rotate the wheels and check:
– Possible inversion when connecting the speed sensors.
– Possible inversion of pipes on the hydraulic unit.
To perform these tests, refer to and apply the procedures defined in **ALP 2**.
Check the condition of the ABS targets and that they conform to specifications.
Also check the sensor/target air gap by rotating each rear wheel through one revolution.
If the fault is still present replace the hydraulic unit.

AFTER REPAIR	Clear the computer memory. Carry out a road test followed by another check with the diagnostic tool.

GETtheMANUALS.org

ALP4	Drift

NOTES	Only consult this customer complaint after a complete check with the diagnostic tool.

Disconnect one wheel speed sensor.
Start the engine and check that only the ABS fault warning light is lit. Do not drive the vehicle if the brake fault warning light is also lit, as the brake limiter function is no longer guaranteed to operate correctly.
Carry out a road test with the ABS deactivated.
Is the fault still present under these conditions?

YES →

Road handling fault not connected with the ABS.
Check the condition of the brake linings and that they are to specification and check the tyre pressures, the front axle, etc.

NO ↓

Normal behaviour linked to the system operation during the regulation phase, mainly on surfaces with uneven grip or which are poorly laid.

AFTER REPAIR	Clear the computer memory. Carry out a road test followed by another check with the diagnostic tool.

GETtheMANUALS.org

ALP5	**Unexpected ABS operation at low speed and with slight pedal pressure**

NOTES	Only consult this customer complaint after a complete check using the diagnostic tool. Warning: ABS regulation may be "unresponsive" when the vehicle is driven on very low grip surfaces (icy roads, wet cobbles, etc.).

Brake pedal vibrations may be felt which are connected to the system behaviour in particular situations:
- Crossing speed bumps.
- Tight cornering with lifting of the inside rear wheel.

These vibrations may be linked to simple brake limiter activation, when the pressure on the rear axle is limited.
If the fault relates to something else, check the speed sensor connectors (micro-breaks) as well as the targets.

AFTER REPAIR	Clear the computer memory. Carry out a road test followed by another check with the diagnostic tool.

GETtheMANUALS.org

ALP6	Unexpected ABS system intervention on a poor road surface

NOTES	Only consult this customer complaint after a complete check with the diagnostic tool.

On poor road surfaces it is normal to feel bucking and vibration of the pedal as well as more significant tyre squealing than on good surfaces.
This gives the impression of a variation in efficiency, but this should be considered normal.

AFTER REPAIR	Clear the computer memory. Carry out a road test followed by another check with the diagnostic tool.

GETtheMANUALS.org

ALP7	**Unexpected ABS operation when use special features used** (car phone, CB, etc.)

NOTES	Only consult this customer complaint after a complete check with the diagnostic tool.

Check that the equipment which is causing the fault is approved.
Check that this equipment has been correctly installed without modification to the original wiring, in particular, that of the ABS (unauthorised ABS connections to earth and **+ after ignition/+ before ignition**).

AFTER REPAIR	Clear the computer memory. Carry out a road test followed by another check with the diagnostic tool.

GETtheMANUALS.org

ALP8	**Lengthening of the brake pedal travel following a regulation phase** (with an irregular pedal when entering the regulation phase)

NOTES	Only consult this customer complaint after a complete check with the diagnostic tool.

Air transit from the hydraulic unit regulation channels to the brake circuits.
Bleed the circuits according to the recommended procedure in **MR 355 Mechanical, 38C, Anti-lock braking system** (using the diagnostic tool command modes).
Following the operation, carry out a road test with ABS regulation.

If the customer complaint is still present, carry out the above operation again once or twice.
If the customer complaint is particularly serious, and bleeding the circuit does not improve matters, replace the hydraulic unit.

AFTER REPAIR	Clear the computer memory. Carry out a road test followed by another check with the diagnostic tool.

GETtheMANUALS.org

ALP9	Spongy pedal

NOTES	Only consult this customer complaint after a complete check with the diagnostic tool.

Air in the brake circuits.
Bleed the circuits in the conventional way starting with the rear right-hand brake, followed by rear left, front left and finally front right. Repeat the operation if necessary.

AFTER REPAIR	Clear the computer memory. Carry out a road test followed by another check with the diagnostic tool.

GETtheMANUALS.org

ALP10	Brake pedal vibration

NOTES	Only consult this customer complaint after a complete check with the diagnostic tool.

Normal reaction of the brake pedal during ABS regulation or of limitation of pressure on the rear axle (brake limiter function).

AFTER REPAIR	Clear the computer memory. Carry out a road test followed by another check with the diagnostic tool.

GETtheMANUALS.org

ALP11	Noise from the pump, pipes or hydraulic unit

NOTES	Only consult this customer complaint after a complete check with the diagnostic tool.

– Vibration of the unit: Check that the unit support insulating rubber mounting bushes are in place and in good condition.
– Vibration of pipes: check that all the pipes are secure in their mounting clips and there is no contact between pipes or between pipes and bodywork.

The "Front left-hand wheel solenoid valves", "Front right-hand wheel solenoid valves", "Rear left-hand wheel solenoid valves" and "Rear right-hand wheel solenoid valves" actuating commands may be used while depressing the brake pedal to determine where the noise is coming from.

AFTER REPAIR	Clear the computer memory. Carry out a road test followed by another check with the diagnostic tool.

GETtheMANUALS.org

VEL SATIS

6 Air conditioning

61B SELF-CONTAINED HEATER

ABBREVIATIONS	61B - 2
Fault finding - Introduction	61B - 3
Fault finding - Fault Interpretation	61B - 4
Fault finding - Conformity check	61B - 18
Fault finding - Command interpretation	61B - 20
Fault finding - Status interpretation	61B - 21
Fault finding - Parameter interpretation	61B - 24
Fault finding - Customer complaints	61B - 25
Fault finding - Fault Finding Chart	61B - 26

V1 **Edition Anglaise**

"The repair procedures given by the manufacturer in this document are based on the technical specifications current when it was prepared.

The procedures may be modified as a result of changes introduced by the manufacturer in the production of the various component units and accessories from which his vehicles are constructed."

All rights reserved by Renault s.a.s.

Copying or translating, in part or in full, of this document or use of the service part reference numbering system is forbidden without the prior written authority of Renault s.a.s.

© Renault s.a.s. 2007

SELF-CONTAINED HEATER
ABBREVIATIONS

GETtheMANUALS.org

ABBREVIATIONS	MEANING OF ABBREVIATION
ABS	Anti-lock braking system
ALP	Fault Finding Chart
APC	After ignition
AVC	Before ignition feed
BVA	Automatic gearbox
BVM	Manual gearbox
BVR	Sequential gearbox
CAN	Controller Area Network
AC	Air conditioning
CD	Compact disc
PAS	Power assisted steering (hydraulic)
DAE	Electric power assisted steering
DVD	Digital versatile disc
DTC	Fault finding code
EGR	Exhaust gas recirculation
ESP	Electronic Stability Program
GMV	Fan assembly
CNG	Compressed natural gas
LPG	Liquefied petroleum gas
HLE	High yield strength
MAG	Metal active gas (for welding steel)
MIG	Metal inert gas (for welding aluminium)
MR	Workshop repair manual
TN	Technical Note
OBD	On board diagnostics
SER	Resistance spot welding
SSPP	Tyre pressure monitoring system
THLE	Very high-tensile strength
TM	Labour time
UCH	UCH
UPC	Protection and switching unit
UCT	Roof control unit
UHLE	Ultra high yield strength
VIN	Vehicle identification number

SELF-CONTAINED HEATER
Fault finding - Introduction

GETtheMANUALS.org

This document explains the generic fault finding procedure for the additional heater function on VEL SATIS phase 1 and 2 vehicles, with diesel engines.
A "Fault Finding Special Features" Technical Note is available for each vehicle fitted with this computer/ function. It covers all the fault finding special features in this document for the vehicle concerned. This Special notes Note complements or replaces the information provided in the Generic fault finding document.

To carry out fault finding on this system, it is essential to have the following items:

- the Workshop Repair Manual for the vehicle concerned,
- the wiring diagram of the function for the vehicle concerned,
- the tools listed in Special tooling required.

GENERAL APPROACH TO FAULT FINDING

- Use one of the diagnostic tools to identify the system fitted to the vehicle (to read the computer group, the program number, the Vdiag, etc.).

- Search for fault finding documents corresponding to the system identified.

- Take note of information contained in the introductory sections.

- Read the faults stored in the computer memory and use the Interpretation of Faults section of the documents.

  REMINDER: each fault is interpreted for a given type of storage (fault present, fault stored, fault present or stored). The checks defined for dealing with each fault are therefore only to be performed on the vehicle if the fault declared by the diagnostic tool is interpreted in the document for its type of storage. The storage type should be considered when using the diagnostic tool after the ignition has been switched off and switched back on.
  If a fault is interpreted when it is declared as stored, the conditions for applying fault finding appear in the Notes box. If the conditions are not met, use the fault finding procedure to check the circuit of the component concerned, since the fault is no longer present on the vehicle. Carry out the same procedure when a fault is declared as stored by the diagnostic tool but is only interpreted in the documentation as a present fault.

- Carry out the conformity check (appearance of possible faults not yet identified by the system's self-test procedure) and implement the associated fault finding procedures according to the results.

- Confirm the repair (customer complaint disappears).

- Use the fault finding procedure for each Customer complaint if the fault persists.

SPECIAL TOOLING REQUIRED:

- diagnostic tool (except XR25),
- multimeter.

GETtheMANUALS.org

DF001 present or stored	PRE-HEATER PLUG CC.0 : Short circuit to earth CO : Open circuit

NOTES	It is a condition of application of the diagnostic to the stored fault that only one fault can be declared present at a time. **The fault is declared present after ignition of the spark plug and with no other fault declared present.**

Remove the blower cover and disconnect connector B2 from the control unit.
Check the condition of the connector and replace it if necessary.

Check the **insulation, continuity and absence of interference resistance of the connectors:**

connector B2 **track 9** → **+** Spark plug
connector B2 **track 12** → **earth** spark plug

Repair if necessary.

If the fault persists, change the spark plug.

AFTER REPAIR	Apply the reference value to confirm that the repair is successful. Deal with any other possible faults. Clear the stored faults and check that no other fault appears.

GETtheMANUALS.org

DF002 present or stored	FUEL METERING PUMP CC.0 : Short circuit to earth CO : Open circuit

NOTES	It is a condition of application of the diagnostic to the stored fault that only one fault can be declared present at a time. **The fault is declared present after the metering pump has been switched on and with no other fault declared present.**

Check the condition of the 8-track connector and replace it if necessary.
Check the **insulation, continuity and absence of interference resistance of the connectors:** 8-track connector **track 4** → **track 2** connector **ST2** metering pump 8-track connector **track 2** → **track 1** connector **ST2** metering pump Repair if necessary.
Measure the resistance at the meter pump terminals.If it is not approximately **10 ohms** replace the meter pump.
Replace the metering pump if the fault persists.

AFTER REPAIR	Apply the reference value to confirm that the repair is successful. Deal with any other possible faults. Clear the stored faults and check that no other fault appears.

GETtheMANUALS.org

DF003 present or stored	COOLANT TEMPERATURE SENSOR CIRCUIT CC.0 : Short circuit to earth CO : Open circuit

NOTES	It is a condition of application of the diagnostic to the stored fault that only one fault can be declared present at a time. **The fault is declared present after the boiler has been ignited and with no other fault declared present.**

Remove the blower cover and disconnect connector B2 from the control unit. Check the condition of the connector and replace it if necessary.
Check the **insulation, continuity and absence of interference resistance of the connectors:** connector B2 **track 3** ⟶ temperature sensor connector B2 **track 4** ⟶ temperature sensor Repair if necessary.
Measure the resistance at the sensor terminals.If it is not **12 KΩ ± 5% at 20˚C** replace the internal wiring of the boiler
Replace the boiler if the fault persists.

AFTER REPAIR	Apply the reference value to confirm that the repair is successful. Deal with any other possible faults. Clear the stored faults and check that no other fault appears.

GETtheMANUALS.org

DF004 present or stored	COMBUSTION AIR FAN CC.0 : Short circuit to earth CO : Open circuit DEF : Blocked

NOTES	It is a condition of application of the diagnostic to the stored fault that only one fault can be declared as present at a time. **The fault is declared present after the boiler has been ignited and with no other fault declared present.**

Remove the blower cover and disconnect connector B2 from the control unit.
Check the condition of the connector and replace it if necessary.

Check the **insulation, continuity and absence of interference resistance of the connectors:**

connector B2 **track 14** → **earth** combustion air fan
connector B2 **track 13** → **+** combustion air fan

Repair if necessary.

Using a multimeter, check that the coil of the fan has not been cut.

Replace the boiler if necessary.

AFTER REPAIR	Apply the reference value to confirm that the repair is successful. Deal with any other possible faults. Delete the stored faults and check that no other fault appears.

GETtheMANUALS.org

DF005 present or stored	OVERHEATING SWITCH CC.0 : Short circuit to earth CO : Open circuit

NOTES	It is a condition of application of the diagnostic to the stored fault that only one fault can be declared as present at a time. **The fault is declared present after the boiler has been ignited and with no other fault declared present.**

Remove the blower cover and disconnect connector B2 from the control unit. Check the condition of the connector and replace it if necessary.
Check the **insulation, continuity and absence of interference resistance of the connectors:** connector B2 **track 6** ⟶ overheating switch connector B2 **track 5** ⟶ overheating switch Repair if necessary.
Measure the resistance at switch terminals.If it is not **12 KΩ ± 5 % at 20˚C** replace the internal wiring of the boiler (the overheating switch is connected to the internal wiring).
Replace the boiler if the fault persists.

AFTER REPAIR	Apply the reference value to confirm that the repair is successful. Deal with any other possible faults. Clear the stored faults and check that no other fault appears.

GETtheMANUALS.org

DF006 present or stored	FLAME DETECTOR CC.0 : Short circuit to earth CO : Open circuit

NOTES	It is a condition of application of the diagnostic to the stored fault that only one fault can be declared present at a time. **The fault is declared present after the boiler has been ignited and with no other fault declared present.**

Remove the blower cover and disconnect connector B2 from the control unit.
Check the condition of the connector and replace it if necessary.

Check the **insulation, continuity and absence of interference resistance of the connectors:**

connector B2 **track 1** → flame detector
connector B2 **track 2** → flame detector

Repair if necessary.

Measure the resistance at the flame detector terminals. If it is not **1200 KΩ ± 5% at 50˚C** replace the internal wiring (the flame detector is connected to the internal wiring).

Replace the **boiler** if the fault persists.

AFTER REPAIR	Apply the reference value to confirm that the repair is successful. Deal with any other possible faults. Delete the stored faults and check that no other fault appears.

GETtheMANUALS.org

DF008 present or stored	BOILER MALFUNCTION 1.DEF : Excess voltage 2.DEF : Not enough voltage

NOTES	It is a condition of application of the diagnostic to the stored fault that only one fault can be declared present at a time. **The fault is declared present after the boiler has been ignited and with no other fault declared present.**

Check the voltage between **tracks 1and 2** of the 8-track connector. This should be between: **10.2 V < X < 16 V.**

Check the **insulation, continuity and absence of interference resistance of the connectors:**

8-track connector **track 1** → **+ battery**
8-track connector **track 2** → **battery earth**

Repair if necessary.

Check the battery and charge circuit if the problem persists.

AFTER REPAIR	Apply the reference value to confirm that the repair is successful. Deal with any other possible faults. Clear the stored faults and check that no other fault appears.

GETtheMANUALS.org

DF010 present or stored	EXCEEDING START UP TIME 1.DEF

NOTES	It is a condition of application of the diagnostic to the stored fault that only one fault can be declared as present at a time. **The fault is declared present if two unsucessful attempts have been made to ignite the boiler in 180 seconds and no other fault is declared present.**

Check the **air inlet and exhaust ducts.** Repair if necessary.
Check the **diesel supply pipes for bubbles.** Check the condition of the metering pump filter Repair if necessary.
Measure the resistance at the filter pump terminals.If it is not **10 Ω ± 5%** replace the metering pump.
Check the condition of the **spark plug.** Replace if necessary.
Replace the **boiler** if the fault persists.

AFTER REPAIR	Apply the reference value to confirm that the repair is successful. Deal with any other possible faults. Delete the stored faults and check that no other fault appears.

GETtheMANUALS.org

DF011 present or stored	EXCEEDING THE COOLING FAN TIME 1.DEF : if flame detector **> 70˚C** the engine cooling fan is activated for **four minutes**

NOTES	It is a condition of application of the diagnostic to the stored fault that only one fault can be declared present at a time. **The fault is declared present after the boiler has been ignited and with no other fault declared present.**

Check the exhaust gas and the combustion air ducts.
Repair if necessary.

Remove the blower cover and disconnect connector B2 from the control unit.
Check the condition of the connector and replace it if necessary.

Check the **insulation, continuity and absence of interference resistance of the connectors:**

connector B2 **track 1** → flame detector
connector B2 **track 2** → flame detector

Repair if necessary.

Measure the resistance at the flame detector terminals.If it is not **1200 KΩ ± 5% at 50˚C** replace the internal wiring of the boiler (the overheating switch is connected to the wiring).

Replace the **boiler** if the fault persists.

AFTER REPAIR	Apply the reference value to confirm that the repair is successful. Deal with any other possible faults. Delete the stored faults and check that no other fault appears.

GETtheMANUALS.org

DF012 present or stored	CONTROL UNIT 1.DEF: Unidentified electrical fault

NOTES	It is a condition of application of the diagnostic to the stored fault that only one fault can be declared as present at a time. **The fault is declared present after the boiler has been ignited and with no other fault declared present.**

Replace the **control unit**.

AFTER REPAIR	Apply the reference value to confirm that the repair is successful. Deal with any other possible faults. Delete the stored faults and check that no other fault appears.

GETtheMANUALS.org

DF013 DF014 DF015 present or stored	MINIMUM FLAME EXTINGUISHER OUTPUT AVERAGE FLAME EXTINCTION OUTPUT MAXIMUM FLAME EXTINGUISHER OUTPUT DEF : Unidentified electrical fault

NOTES	It is a condition of application of the diagnostic to the stored fault that only one fault can be declared present at a time. **The fault is declared present after the boiler has been ignited and with no other fault declared present.**

Check the exhaust gas duct and the combustion air duct. Repair if necessary.
Check the diesel supply pipes to the boiler for air bubbles. Repair if necessary.
Check the condition of connector B2 in the control unit and replace it if necessary.
Check the **insulation, continuity and absence of interference resistance of the connectors:** connector B2 **track 9** → **+** Spark plug connector B2 **track 12** → **earth** spark plug Repair if necessary.
If the fault persists, change the **spark plug.**

AFTER REPAIR	Apply the reference value to confirm that the repair is successful. Deal with any other possible faults. Delete the stored faults and check that no other fault appears.

GETtheMANUALS.org

DF016 DF017 DF018 present or stored	DETECTION OF OVERHEATING: LOW PROBABILITY DETECTION OF OVERHEATING: PROBABLE DETECTION OF OVERHEATING: CONFIRMED DEF : Unidentified electrical fault

NOTES	It is a condition of application of the diagnostic to the stored fault that only one fault can be declared as present at a time. **The fault is declared present after the boiler has been ignited and with no other fault declared present.**
	Special notes **probability:** temperature difference of **15˚C between the sensor and the overheating switch** **confirmed:** temperature at the sensor or switch **> 125˚C** **low probability:** material temperature threshold exceeded, sensor or switch **> 130˚C.**

Check the circulation of water through the system. Check that it has been degassed.
Remove the blower cover and disconnect connector B2 from the control unit. Check the condition of the connector and replace it if necessary.
Check the **insulation, continuity and absence of interference resistance of the connectors:** connector B2 **track 3** → temperature sensor connector B2 **track 4** → temperature sensor connector B2 **track 5** → overheating switch connector B2 **track 6** → overheating switch Repair if necessary.
Measure the resistance at the sensor terminals. If it is not **12 KΩ ± 5% at 20˚C** replace the internal wiring of the boiler Measure the resistance at switch terminal. If it is not **12 KΩ ± 5% at 20˚C** replace the internal wiring of the boiler
Replace the **boiler if the fault persists.**

AFTER REPAIR	Apply the reference value to confirm that the repair is successful. Deal with any other possible faults. Clear the stored faults and check that no other fault appears.

GETtheMANUALS.org

DF019 present or stored	BLOCK: TOO MANY CONSECUTIVE START UP ATTEMPTS DEF : Unidentified electrical fault

NOTES	Priority in dealing with a number of faults: If more than one of the faults **DF019** and **DF001, DF002** are stored, treat as a priority faults **DF001 pre-heater plug and DF002 metering pump.** It is a condition of application of the diagnostic to the stored fault that only one fault can be declared as present at a time. **The fault is declared present following ten failed attempts to start the boiler and with no other faults declared present**

Clear **bad start up counter** using the delete commandl **RZ002.**

AFTER REPAIR	Apply the reference value to confirm that the repair is successful. Deal with any other possible faults. Delete the stored faults and check that no other fault appears.

GETtheMANUALS.org

DF020 present or stored	BLOCK: SUCCESSIVE OVERHEATING DEF : Unidentified electrical fault

NOTES	It is a condition of application of the diagnostic to the stored fault that only one fault can be declared present at a time. **The fault is declared present after the boiler overheats ten times in succession and with no other fault declared present.**

Delete **overheating meter** using the clear control **RZ001.**

AFTER REPAIR	Apply the reference value to confirm that the repair is successful. Deal with any other possible faults. Clear the stored faults and check that no other fault appears.

GETtheMANUALS.org

NOTES	Only check the conformity after performing a **complete check** with the diagnostic tool. The values indicated in this conformity check are given as examples. Condition for performing check: **engine temperature below 81˚C and external temperature below 5˚C**

Order	Function	Parameter or state Check or action	Display and notes	Fault finding
1	+ After ignition present	**ET001:** + After ignition present	**YES**	If there is a problem refer to fault finding state **ET001.**
2	Engine running	**ET007:** Engine running	**YES** **NO** if check **AC002** is activated, light boiler	If there is a problem refer to fault finding state **ET007.**
3	Boiler ventilation	**ET002:** Combustion air ventilation fan	**IGNITE**	**In the event of a problem,** perform the **fault finding procedure** for the combustion air fan **DF004**
		PR014: Engine cooling fan voltage	**0 to 7 volts**	
4	Flame detected	**ET003:** Flame detected	**YES**	**In the event of a problem,** perform the **fault finding procedure** for the flame detector **DF006**
5	System blocked	**ET004:** System blocked	**NO**	**In the event of a problem,** perform the **fault finding procedure** for block due to too many consecutive starts **DF019 and** block due to successive overheating **DF020**
6	Boiler output	**ET005:** Boiler output	**MIN OR AVERAGE**	In the event of a problem, refer to the fault finding procedure for state **ET005**.

SELF-CONTAINED HEATER
Fault finding - Conformity check

GETtheMANUALS.org

NOTES	Only check the conformity after performing a **complete check** with the diagnostic tool. The values indicated in this conformity check are given as examples. Condition for performing check: **engine temperature below 81˚C and external temperature below 5˚C**

Order	Function	Parameter or state Check or action	Display and notes	Fault finding
7	Overheating switch	**PR008:** Overheating switch value measured	**Overheating if temperature is above 125˚C**	**If there is a problem,** perform the **fault finding procedure** on the overheating switch **DF005.**
8	Coolant temperature sensor	**PR010:** Coolant temperature sensor value measured	**X = engine temperature ± 5ºC**	**If there is a problem,** perform the fault finding procedure on the coolant temperature sensor circuit. **DF003.**
9	Flame detector	**PR013:** Flame detector value measured	**X = boiler temperature ± 20˚C**	**If there is a problem,** perform the **fault finding procedure** on the flame detector DF006.
10	Computer supply voltage	**PR108:** Computer supply voltage	**10.2 V < X < 16 V**	If there is a problem check the fault finding of parameter **PR108**
11	Spark plug feed instruction	**PR016:** Spark plug feed instruction	**None.**	**If there is a problem,** perform the **fault finding procedure DF001 on the faulty pre-heater plug.**
12	Fuel pump control frequency	**PR017:** Fuel pump control frequency	**X = frequency in Hertz ± 5%**	**If there is a problem,** perform the **fault finding procedure** on the fuel metering pump **DF002.**

GETtheMANUALS.org

AC002 AC003	BOILER CONTROL AC002 : Ignite the boiler AC003 : Extinguish the boiler

NOTES	**Important : During boiler control, it is essential that the engine is running to avoid any overheating due to non-circulation of water.**

The command menu on the diagnostic tool can be used to stop or start the boiler.If it fails to start check the following:

– there is fuel in the tank,
– the fuses are intact
– the combustion air inlet and outlet ducts are not blocked.

Repair if necessary.

Check **the connection and the condition of the intermediary 5-track connector** between the vehicle wiring and the boiler and replace if necessary.

Check the **insulation, continuity and absence of interference resistance** of the connections between:

+ battery	→	**Track A** 5 track connector
Earth	→	**Track D** 5 track connector
+12V After contact	→	**Track E** 5-track connector
HK7 diagnostic socket	→	**Track B** 5 track connector

Repair if necessary.

Replace the **boiler if the fault persists.**

GETtheMANUALS.org

ET001	+APC PRESENT

NOTES	None.

If the state **INACTIVE is displayed** check that the battery charge is above **10.2 volts,** otherwise repair the vehicle charge circuit.
Check **the connection of the intermediary 5 track connector** between the vehicle wiring and the boiler and replace if necessary. Check **the connection and condition of the intermediary 8-track connector located on the boiler mounting.**
Check the **insulation, continuity and absence of interference resistance** of the connections between: **+ battery** → **Track 1** 8 track connector **Earth** → **Track 2** 8 track connector **+12 V After connector** → **Track 7** 8 track connector Repair if necessary.
Replace the boiler **control unit** if the problem persists.

GETtheMANUALS.org

ET005	BOILER OUTPUT

NOTES	None

OFF	State normal **if engine** off. The state of the boiler is **OFF** if the external air temperature is **above 5˚C.** The boiler is also **OFF** when the engine temperature is above **82˚C.**

MIN	The state of the boiler is **MINIMUM OUTPUT** when the engine temperature is between **77˚C and 82˚C and is increasing, and** the external air temperature is below **5˚C.** The state of the boiler is **MINIMUM OUTPUT** when the engine temperature is between **82˚C and 73˚C and is decreasing, and** the external air temperature is below **5˚C.**

AVERAGE	The state of the boiler is **AVERAGE OUTPUT** when the outside air temperature is below **5˚C** and the coolant temperature is below **73˚C**. It will function at this level of output until the coolant temperature reaches **77˚C.**

GETtheMANUALS.org

ET007	ENGINE RUNNING

NOTES	None.

Check **the connection and condition of the connector** on the alternator and the vehicle charge circuit. Repair if necessary.
Check the **insulation, the continuity and absence of interference resistance** on the connection between: **Alternator track L** ⟶ **Track C** 5 track connector Repair if necessary.
Check the **insulation, continuity and absence of interference resistance** of the connections between: **Track C** ST1 5 track connector ⟶ **Track 1** ST3 bimetallic strip connector **Track 2** ST3 bimetallic strip connector ⟶ **Track 6** 8 track connector Repair if necessary. If the continuity is poor between **tracks 1 and 2 of the ST3 connector,** replace **the bimetallic strip with a schunt** and test the continuity between **tracks 1 and 2.** Replace the bimetallic strip if necessary.
Replace the **boiler control unit** if the problem persists.

GETtheMANUALS.org

PR108	COMPUTER SUPPLY VOLTAGE

NOTES	None.

Check **the connection of the intermediary 5-track connector** between the vehicle wiring and the boiler and replace if necessary.

Check the **insulation, continuity and absence of interference resistance** of the connections between:

+ Battery	→	**Track A** 5-track connector
Earth	→	**Track D** 5-track connector
+12V After ignition	→	**Track E** 5-track connector

Repair if necessary.

Check the **insulation, continuity and absence of interference resistance** of the connections between:

Track A 5 track connector	→	**Track 1** 8 track connector
Track D 5-track connector	→	**Track 2** 8-track connector
Track E 5 track connector	→	**Track 7** 8 track connector

Repair if necessary.

Replace the **boiler control unit** if the problem persists.

GETtheMANUALS.org

NO DIALOGUE WITH THE COMPUTER	CHART 1
NO HEATING OR INADEQUATE HEATING	CHART 2

GETtheMANUALS.org

ALP 1	No dialogue with the computer

NOTES	None.

Try the diagnostic tool on another vehicle.

Check:
– the connection between the diagnostic tool and the diagnostic socket (lead in good condition),
– the engine fuses.

Check for the presence of **+ 12 volts before ignition feed** on **track 16**, **+ 12 volts after ignition feed** on **track 1** and an **earth** on **tracks 4 and 5** of the diagnostic socket.

Repair if necessary.

Check **the insulation, continuity and the absence of interference resistance** on the connections between:

connector **ST1 track A**	→	**V battery** (fuse box)
connector **ST1 track E**	→	**+ after ignition feed** (fuse box)
connector **ST1 track D**	→	**earth**
connector **ST1 track B**	→	**track 7** of the diagnostic socket (line K)

Repair if necessary.

AFTER REPAIR	Check that the system is operating correctly.

GETtheMANUALS.org

ALP 2	No heating or inadequate heating

NOTES	Only check the customer complaint after performing a **complete check** with the **diagnostic tool**.

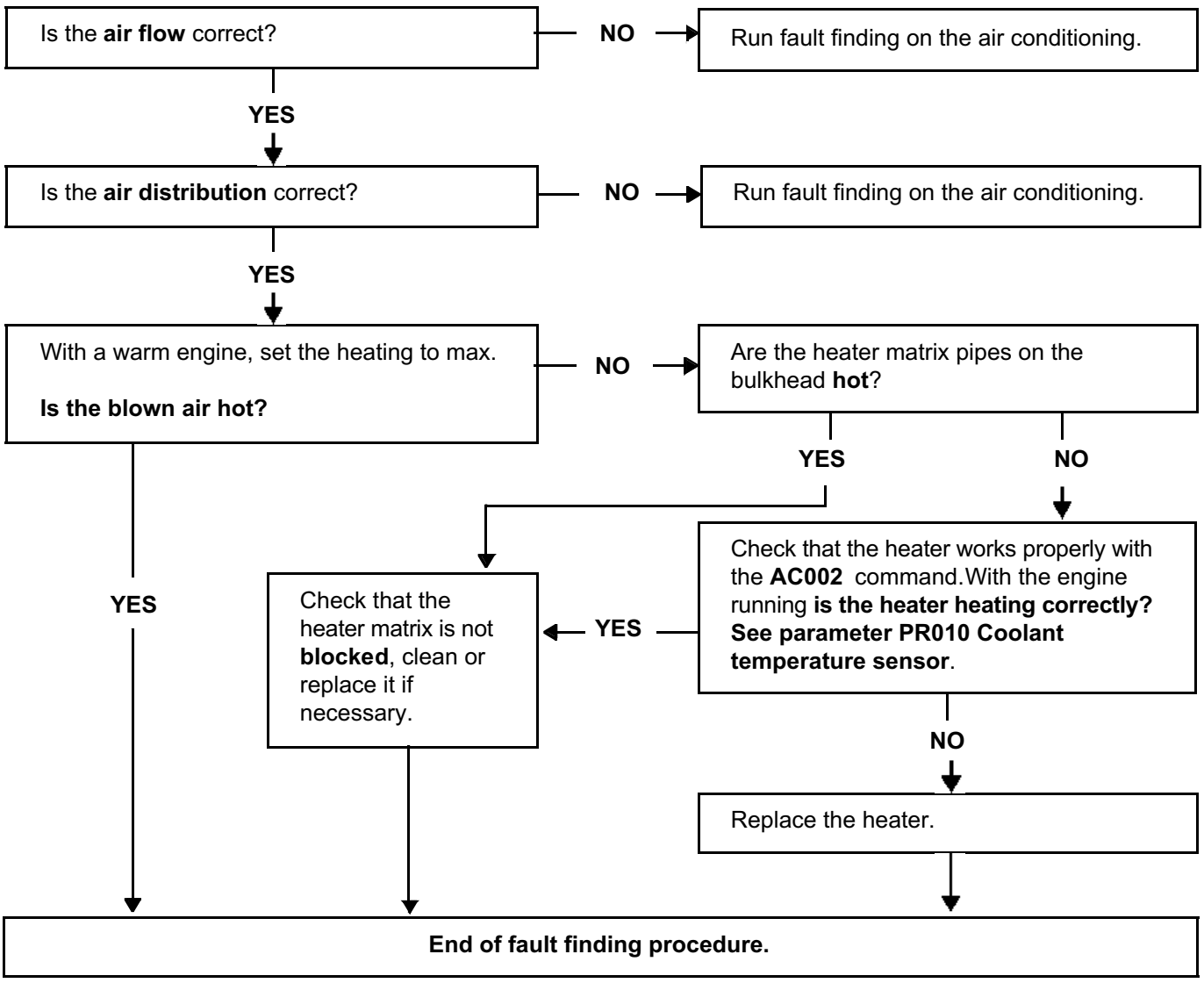

AFTER REPAIR	Check that the system is operating correctly.

independent heating 1.0

GETtheMANUALS.org

VEL SATIS

6 Air conditioning

62B CLIMATE CONTROL

Program No.: 20
Vdiag No.: 09

Fault finding - Introduction	62B - 2
Fault finding - Allocation of computer tracks	62B - 7
Fault finding - Replacement of components	62B - 9
Fault finding - Configurations and programming	62B - 10
Fault finding - Fault summary table	62B - 11
Fault finding - Interpretation of faults	62B - 12
Fault finding - Conformity check	62B - 30
Fault finding - Status summary table	62B - 50
Fault finding - Interpretation of statuses	62B - 51
Fault finding - Parameter summary table	62B - 60
Fault finding - Interpretation of parameters	62B - 61
Fault finding - Help	62B - 67
Fault finding - Customer complaints	62B - 72
Fault finding charts (ALP)	62B - 73

V4 **Edition Anglaise**

"The repair procedures given by the manufacturer in this document are based on the technical specifications current when it was prepared.

The procedures may be modified as a result of changes introduced by the manufacturer in the production of the various component units and accessories from which his vehicles are constructed."

All rights reserved by Renault s.a.s.

Copying or translating, in part or in full, of this document or use of the service part reference numbering system is forbidden without the prior written authority of Renault s.a.s.

© Renault s.a.s. 2008

GETtheMANUALS.org

1. SCOPE OF THIS DOCUMENT

This document presents the fault finding procedure applicable to all computers with the following specifications:

Vehicle: **Vel Satis Phase 1 and Phase 2**	*Computer name:* **Climate control**
Function concerned: **Climate control**	*Program No.:* **20**
	Vdiag No.: **09**

2. PREREQUISITES FOR FAULT FINDING

Documentation type:

Fault finding procedures (this manual):
– Assisted fault finding (integrated into the **diagnostic tool**), Dialogys.
Wiring Diagrams:
– Visu-Schéma (CD-ROM), paper.

Type of diagnostic tools:

– **CLIP**

Special tooling required:

Special tooling required	
	Multimeter
Elé. 1681	Computer connection bornier

3. RECAP

Procedure

To save energy, the Vel Satis Phase 1 and Phase 2 UCH interrupts the + after ignition feed after **3 minutes** have elapsed.

To run fault finding on a computer, it is possible to force the + after ignition feed on for **1 hour** by applying the following procedure:
– Press the card unlocking button,
– insert the card in the reader,
– press the Start button (interrupting the timed + after ignition feed mode),
– press and hold the start button for over **5 seconds** until the engine immobiliser warning light starts to flash rapidly (4 Hz).

This forced + after ignition feed mode remains on for **1 hour**.

Pressing the start button or removing the card from the card reader cuts off the forced + after ignition feed, but does not interrupt the forced + after ignition feed mode timing. As long as the full time has not elapsed, switching on the + after ignition feed reactivates the forced + after ignition feed for the remaining time.

GETtheMANUALS.org

Faults

Faults are declared as either present or stored (depending on whether they appeared in a certain context and have disappeared since, or whether they remain present but have not been diagnosed within the current context).

The **present** or **stored** status of faults should be taken into consideration when the diagnostic tool is switched on after the + after ignition feed (without any system components being active).

For a **present fault**, apply the procedure described in the **Interpretation of faults** section.

For a **stored fault**, note the faults displayed and apply the instructions in the **Notes** section.

If the fault is **confirmed** when the instructions in the Notes section are applied, the fault is present. Deal with the fault

If the fault is **not confirmed**, check:
- the electrical lines which correspond to the fault,
- the connectors on these lines (corrosion, bent pins, etc.),
- the resistance of the component detected as faulty,
- the condition of the wires (melted or split insulation, wear).

Conformity check

The aim of the conformity check is to check data that does not produce a fault on the diagnostic tool because the data is inconsistent. Therefore, this stage is used to:
- carry out fault finding on faults that do not have a fault display, and which may correspond to a customer complaint.
- check that the system is operating correctly and that there is no risk of a fault recurring after repairs.

This section gives the fault finding procedures for statuses and parameters and the conditions for checking them.

If a status is not behaving normally or a parameter is outside the permitted tolerance values, consult the corresponding fault finding page.

Customer complaints - Fault finding chart

If the test with the diagnostic tool is OK but the customer complaint is still present, the fault should be processed by **customer complaint**.

A synopsis of the general procedure to follow is provided on the following page in the form of a flow chart.

GETtheMANUALS.org

4. FAULT FINDING PROCEDURE

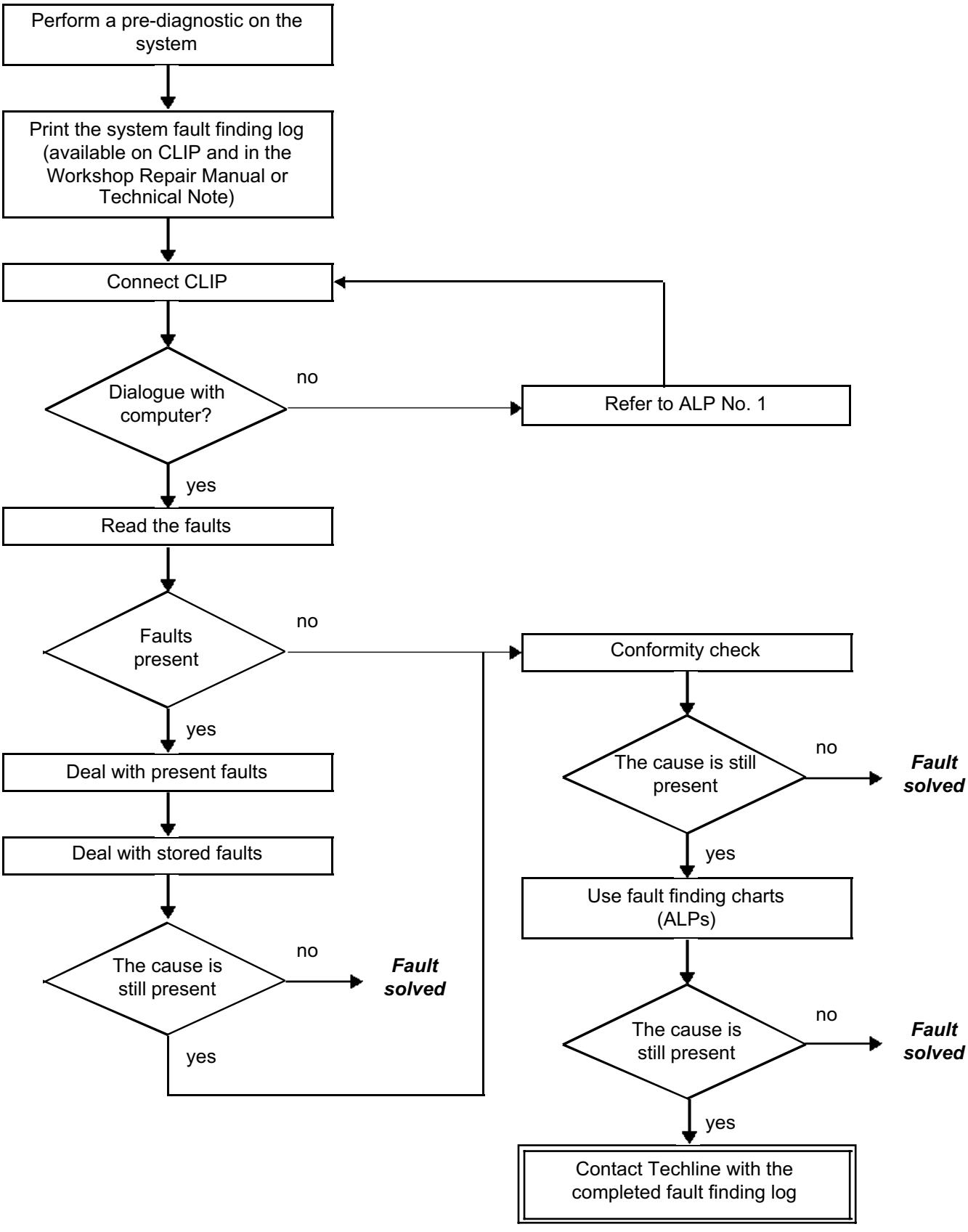

GETtheMANUALS.org

4. FAULT FINDING PROCEDURE (continued)

Wiring check

Fault finding problems
Disconnecting the connectors and/or manipulating the wiring harness may temporarily remove the cause of a fault.
Electrical voltage, resistance and insulation measurements are generally correct, especially if the fault is not present when the analysis is made (stored fault).

Visual inspection
Look for damage under the bonnet and in the passenger compartment.
Carefully check the fuses, insulators and wiring harness routing.
Look for signs of oxidation.

Tactile inspection
While manipulating the wiring harness, use the diagnostic tool to note any change in fault status from stored to present.
Make sure that the connectors are properly locked.
Apply light pressure to the connectors.
Twist the wiring harness.
If there is a change in status, try to locate the source of the fault.

Inspection of each component
Disconnect the connectors and check the appearance of the clips and tabs, as well as the crimping (no crimping on the insulating section).
Make sure that the clips and tabs are properly locked in the sockets.
Check that no clips or tabs have been dislodged during connection.
Check the clip contact pressure using an appropriate model of tab.

Continuity and insulation check
Check the continuity of entire lines, then section by section.
Look for a short circuit to earth, to **+ 12 V** or to another wire.

If a fault is detected, repair or replace the wiring harness.

GETtheMANUALS.org

5. FAULT FINDING LOG

IMPORTANT

IMPORTANT
Any fault on a complex system requires a full fault finding procedure with the appropriate tools. The FAULT FINDING LOG, which should be completed during the procedure, enables you to keep track of the procedure which is carried out. It is an essential document when consulting the manufacturer.

IT IS THEREFORE MANDATORY TO FILL OUT A FAULT FINDING LOG EACH TIME FAULT FINDING IS CARRIED OUT.

You will always be asked for this log:

- when requesting technical assistance from Techline,
- for approval requests when replacing parts for which approval is mandatory,
- to be attached to monitored parts for which reimbursement is requested. The log is needed for warranty reimbursement, and enables better analysis of the parts removed.

6. SAFETY ADVICE

Safety rules must be observed during any work on a component to prevent any damage or injury:

– check the battery voltage to avoid incorrect operation of computer functions,
– Use the proper tools.

GETtheMANUALS.org

CLIMATE CONTROL computer 30-track connector A

Computer track	Description
1	0 Volts
2	+ 12 V SIDE LIGHTS FEED
3	Cold loop pressure sensor signal
4	**Electrical windscreen command**
5	Diagnostic line K
6	**+ 12 V** after ignition feed
7	**Controlled capacity command**
8	0 V cold loop pressure signal
9	**CAN L**
10	Multiplex line H
11	**Cold loop pressure sensor feed**
12	Heated rear window control
13	Blower speed feedback signal
14	**0 V dimmer controlled**
15	Clutch compressor control
16	0 Volts
17	Power-Relay (engine running)
18	+ 12 Volts electronic BATT feed
19	Solar radiation sensor signal
20	Rear blower signal
21	+ 12 V side lights feed
22	Humidity sensor signal
23	Not used
24	Not used
25	Not used
26	0 V from humidity/temperature/solar radiation sensors
27	Blower speed setting
28	LED lighting command output
29	Interior temperature sensor signal
30	0 Volts

GETtheMANUALS.org

CLIMATE CONTROL computer 30-track B connector (tracks 1 to 14 are not used)

Computer track	Description
15	0 V evaporator sensor
16	Toxicity sensor feed
17	Toxicity sensor signal - NOX
18	Toxicity sensor signal - COX
19	0 V toxicity sensor
20	De-icing distribution actuator a
21	De-icing distribution actuator b
22	Left-hand mixing motor actuator a
23	Left-hand mixing motor actuator b
24	Footwell/ventilation distribution actuator a
25	Footwell/ventilation distribution actuator b
26	Right-hand mixing motor actuator a
27	Right-hand mixing motor actuator b
28	Evaporator sensor signal
29	Recirculation actuator a
30	Recirculation actuator b

New CLIMATE CONTROL Redesign 2005 computer 15-track connector B

Computer track	Description
1	Toxicity sensor feed
2	Toxicity sensor signal - NOX
3	Toxicity sensor signal - COX
4	0 V toxicity sensor
5	0 V evaporator sensor
6	Not used
7	Left-hand mixing motor actuator a
8	Left-hand mixing motor actuator b
9	Footwell/ventilation distribution actuator a
10	Footwell/ventilation distribution actuator b
11	Right-hand mixing motor actuator a
12	Right-hand mixing motor actuator b
13	Evaporator sensor signal
14	Recirculation actuator a
15	Recirculation actuator b

GETtheMANUALS.org

REPLACING THE CLIMATE CONTROL COMPUTER:

WARNING
Before replacing the climate control computer, check that it is faulty (read faults, conformity of variables, read customer complaints). Techline will authorise replacement of the computer after completion of a fault finding log (available in this manual and the diagnostic tool).

– Note the computer configuration according to the optional equipment fitted on the vehicle.
– Ensure that the ignition is switched off.
– After approval from the **Techline,** replace the computer.
– Switch on the ignition and carry out a check using the diagnostic tool.
– Configure the computer according to the vehicle specifications.
– Switch off the ignition and then back on for the configurations to register.
– Go to the Read configuration menu and confirm that the configurations have been stored.
– Check for faults and carry out the fault finding procedure corresponding to the possible faults shown on the diagnostic tool.
– Clear any stored faults.
– Start the engine, switch on the air conditioning and ensure that it is working correctly.

GETtheMANUALS.org

CLIMATE CONTROL COMPUTER CONFIGURATION: The climate control computer has several configurations. These configurations need to be set after replacing the computer.
These configurations are important as they ensure optimal air conditioning inside the vehicle (improved control of the climate control). If they are not entered correctly, cold air and warm air production will be severely affected.
Take configuration readings to ensure that the configurations have taken effect.

CONFIGURATION		CONFIGURATION READING	
CF044	VEHICLE TYPE	**LC013**	VEHICLE TYPE
CF111	TYPE OF POWER ASSISTED STEERING	**LC037**	TYPE OF POWER ASSISTED STEERING
CF112	EVAPORATOR TEMPERATURE SENSOR	**LC038**	EVAPORATOR TEMPERATURE SENSOR
CF050	ELECTRIC HEATED WINDSCREEN	**LC005**	ELECTRIC HEATED WINDSCREEN
CF076	Type of compressor	**LC012**	Type of compressor
CF110	DRIVE RATIO	**LC036**	DRIVE RATIO
		LC025	ENGINE MODEL
		LC045	COOLING FAN UNIT SIGNAL THROUGH INJECTION

GETtheMANUALS.org

Tool fault	Diagnostic tool title
DF001	Computer
DF002	Refrigerant pressure sensor circuit
DF007	Solar radiation sensor circuit
DF018	Right-hand mixing motor circuit
DF019	Left-hand mixing motor circuit
DF020	Evaporator temperature sensor circuit
DF021	Air recirculation motor circuit
DF026	Solar radiation sensor circuit
DF027	Humidity sensor circuit
DF028	Footwell/ventilation distribution motor circuit
DF030	Compressor output control circuit
DF033	Refrigerant charge
DF043	Multiplex network
DF082	Passenger compartment ventilation motor circuit
DF090	Compressor control
DF092	No injection multiplex signal
DF093	No UCH multiplex signal
DF094	No ABS system multiplex signal

GETtheMANUALS.org

DF001 PRESENT	COMPUTER

NOTES	None.

Check **the connection and condition** of the climate control control panel connectors.
Repair if necessary.

Connect the universal bornier in place of the computer and check the **insulation, continuity and the absence of interference resistance** on the following connections:

- computer connector A **track 1** → **earth**
- computer connector A **track 16** → **earth**
- computer connector A **track 30** → **earth**
- computer connector A **track 6** → **+ after ignition**
- computer connector A **track 18** → **+ after ignition**

Repair if necessary.

If the fault is still present, **replace the control panel** for the climate control system (before carrying out the replacement, record the configuration to program the new computer).

AFTER REPAIR	Reconfigure the computer (see the help section). Clear the stored faults. Deal with any other faults.

GETtheMANUALS.org

DF002 PRESENT	REFRIGERANT PRESSURE SENSOR CIRCUIT CO : open circuit CC : short circuit

NOTES	**Special notes:** The air conditioning compressor disengages if the condenser outlet pressure is below 2 bar or above 27 bar (relative).

Check the **connection and condition** of the refrigerant pressure sensor connector.
Replace the connector if necessary.

use the universal bornier to check the **insulation, continuity and the absence of interference resistance** on the following connections:

computer connector A **track 8** → **track A** of the pressure sensor
computer connector A **track 11** → **track B** of the pressure sensor
computer connector A **track 3** → **track C** of the pressure sensor

Repair if necessary.

With the ignition switched on, check that the sensor is correctly supplied by the computer by measuring between: **track A** and **track B** of the sensor.
If there is no **5 V**, replace the climate control computer.

If the fault is still present, **replace** the pressure sensor.

AFTER REPAIR	Clear the stored faults. Deal with any other faults.

GETtheMANUALS.org

DF007 PRESENT	INTERIOR TEMPERATURE SENSOR CIRCUIT CO : open circuit CC : short circuit

NOTES	**Special notes:** The interior temperature sensor is attached to a printed circuit with the humidity sensor. This component is located in the fixed casing below the interior rear-view mirror.

Check **the connection and condition** of the interior temperature sensor connector. Replace the connector if necessary.
With the ignition on, check that the temperature sensor fan **is operating correctly**. If it is not working, check for **+12 V** on **track 1** of the temperature sensor connector and **earth** on **track 3**. If the fan feed is correct and the fault is still present, replace the **sensors/fan** (the fan is not available separately).
Connect the universal bornier in place of the computer and check the **insulation, continuity and the absence of interference resistance** of the following connections: computer connector A **track 29** ⟶ **track 4** of the temperature sensor computer connector A **track 26** ⟶ **track 5** of the temperature sensor Repair if necessary.
Check **the resistance value** of the sensor across: **Track 4** and **track 5** of the internal temperature sensor connector and replace the sensor if the resistance is not approximately: **10 kΩ at 25°C**.
If the fault is still present, **replace** the internal temperature sensor.

AFTER REPAIR	Clear the stored faults. Deal with any other faults.

GETtheMANUALS.org

DF018 PRESENT OR STORED	RIGHT-HAND MIXING MOTOR CIRCUIT

NOTES	**Conditions for applying the fault finding procedure to stored faults:** The fault is declared present after the air conditioning has been switched on and the right-hand temperature control has been operated.
	Special notes: The dashboard must be removed to allow access to check the mixer motor.

Connect the universal bornier in place of the computer and check the **resistance value** of the motor as well as the **insulation against earth and against + 12 V** of the connections between:
Track 26 and **track 27** of computer connector B or **tracks 11** and **12** of the new 2005 computer connector B.
The motor should have a resistance of approximately: **36** Ω at 20˚C.

If the value is incorrect, or if the fault is still present due to a poor or loose connection: **remove the dashboard** to gain access to the right-hand mixing motor.

Check **the connection and condition of the** right-hand mixing motor.
Replace the connector if necessary.

Check that the mixing motor flap is not **jammed**.
Repair if necessary.

Connect the universal bornier in place of the computer and check the **insulation, continuity and the absence of interference resistance** of the following connections:

computer connector B **track 26** ⟶ **track 5** of the right-hand mixing motor
computer connector B **track 27** ⟶ **track 6** of the right-hand mixing motor

or:

computer connector B **track 11** ⟶ **track 5** of the right-hand mixing motor
computer connector B **track 12** ⟶ **track 6** of the right-hand mixing motor

For the new redesign 2005 computer.
Repair if necessary.

Check the resistance value of the right-hand mixing motor by measuring between:
track 5 and **track 6** of the mixing motor connector; replace the motor if the resistance is not approximately: **36 Ω** at 20˚C.

If the fault is still present, **replace** the right-hand mixing motor.

AFTER REPAIR	Follow the instructions to confirm repair. Clear the stored faults. Deal with any other faults.

GETtheMANUALS.org

DF019 PRESENT OR STORED	LEFT-HAND MIXING MOTOR CIRCUIT

NOTES	**Conditions for applying the fault finding procedure to stored faults:** The fault is declared present after the climate control system has been switched on and the left-hand side temperature control has been operated.
	Special notes: The dashboard must be removed to allow access to check the mixer motor.

Connect the universal bornier in place of the computer and check the **resistance value** of the motor as well as the **insulation against earth and against + 12 V** of the connections by measuring between:
Track 22 and **track 23** of computer connector B or **tracks 7** and **8** of the new 2005 redesign computer connector B.
The motor should have a resistance of approximately: **36** Ω at 20˚C.

If the value is incorrect, or if the fault is still present due to a poor or loose connection: **remove the dashboard** to gain access to the left-hand mixing motor.

Check **the connection and condition of the** left-hand mixing motor.
Replace the connector if necessary.

Check that the mixing motor flap is not **jammed**.
Repair if necessary.

Connect the universal bornier in place of the computer and check the **insulation, continuity and the absence of interference resistance** of the following connections:

computer connector B **track 22** ⟶ **track 5** of the left-hand mixing motor
computer connector B **track 23** ⟶ **track 6** of the left-hand mixing motor

or:

computer connector B **track 7** ⟶ **track 5** of the left-hand mixing motor
computer connector B **track 8** ⟶ **track 6** of the left-hand mixing motor

For the new redesign 2005 computer.
Repair if necessary.

Check the resistance value of the left-hand mixing motor by measuring between:
track 5 and **track 6** of the mixing motor connector; replace the motor if the resistance is not approximately: **36 Ω** at 20˚C.

If the fault is still present, **replace** the left-hand mixing motor.

AFTER REPAIR	Follow the instructions to confirm repair. Clear the stored faults. Deal with any other faults.

GETtheMANUALS.org

DF020 PRESENT	EVAPORATOR TEMPERATURE SENSOR CIRCUIT CO : open circuit CC : short circuit

NOTES	None.

Check **the connection and condition** of the evaporator temperature sensor connector.
Replace the connector if necessary.

Connect the universal bornier in place of the computer and check the **insulation, continuity and the absence of interference resistance** of the following connections:

computer connector B **track 28** → **track 1** of the temperature sensor
computer connector B **track 15** → **track 2** of the temperature sensor

or:

computer connector B **track 13** → **track 1** of the temperature sensor
computer connector B **track 5** → **track 2** of the temperature sensor

For the new redesign 2005 computer.
Repair if necessary.

Check the resistance value of the evaporator temperature sensor by measuring between:
track 1 and the **track 2** of the evaporator temperature sensor connector and replace the sensor if the resistance is not approximately: **30 kΩ** at 25˚C.

If the fault is still present, **replace** the evaporator temperature sensor.

AFTER REPAIR	Clear the stored faults. Deal with any other faults.

GETtheMANUALS.org

DF021 PRESENT OR STORED	RECIRCULATION MOTOR CIRCUIT

NOTES	**Conditions for applying the fault finding procedure to stored faults:** The fault is declared present after the climate control system has been switched on and the recirculation control has been operated.
	Special notes: The air recirculation motor is located beneath the particle filter and the base of the glove compartment must be removed to gain access to it.

Check **the connection and condition** of the air recirculation motor.
Replace the connector if necessary.

Check that the recirculation motor flap is not **jammed**.
Repair if necessary.

Connect the universal bornier in place of the computer and check the **insulation, continuity and the absence of interference resistance** of the following connections:

computer connector B **track 29** → **track A** of the air recirculation motor
computer connector B **track 30** → **track B** of the air recirculation motor

or:

computer connector B **track 14** → **track A** of the air recirculation motor
computer connector B **track 15** → **track B** of the air recirculation motor

For the new redesign 2005 computer.
Repair if necessary.

Check the resistance value of the recirculation motor by measuring between:
track A and **track B** of the recirculation motor connector and replace the motor if the resistance is not approximately: **36** Ω at 20˚C.

If the fault is still present, **replace** the recirculation motor.

AFTER REPAIR	Follow the instructions to confirm repair. Clear the stored faults. Deal with any other faults.

GETtheMANUALS.org

DF026 PRESENT	SOLAR RADIATION SENSOR CIRCUIT CO : open circuit CC : short circuit

NOTES	**Special notes:** The sunlight sensor (a little black button) is located on top of the instrument panel, on the windscreen side.

Check that the solar radiation sensor is not hidden under something (nothing should be placed on top of the sensor).

Check **the connection and condition of the** solar radiation sensor connector.
Replace the connector if necessary.

Connect the universal bornier in place of the computer and check the **insulation, continuity and the absence of interference resistance** of the following connections:
computer connector A **track 26** ⟶ **track 1** of the solar radiation sensor
computer connector A **track 19** ⟶ **track 2** of the solar radiation sensor
Repair if necessary.

If the fault is still present, **replace** the solar radiation sensor.

AFTER REPAIR	Clear the stored faults. Deal with any other faults.

GETtheMANUALS.org

DF027 PRESENT	HUMIDITY SENSOR CIRCUIT

NOTES	**Special notes:** The humidity sensor is attached to a printed circuit with the interior temperature sensor. This component is located in the fixed casing below the interior rear-view mirror.

Check **the connection and condition** of the humidity sensor connector.
Replace the connector if necessary.

With the ignition on, check that the humidity sensor fan **is operating correctly**.
If not, check for **+12 V** on **track 1** of the humidity sensor connector and an **earth** on **track 3**.
If the fan feed is correct and the fault is still present, replace the **sensors/fan** (the fan is not available separately).

Connect the universal bornier in place of the computer and check the **insulation, continuity and the absence of interference resistance** of the following connections:
computer connector A **track 26** ⟶ **track 5** of the humidity sensor
computer connector A **track 22** ⟶ **track 6** of the humidity sensor
Repair if necessary.

If the fault is still present, **replace** the humidity sensor.

AFTER REPAIR	Clear the stored faults. Deal with any other faults.

GETtheMANUALS.org

DF028 PRESENT OR STORED	FOOTWELL/VENTILATION DISTRIBUTION MOTOR CIRCUIT

NOTES	**Conditions for applying the fault finding procedure to stored faults:** The fault is declared present after the climate control has been activated and the air distribution control has been operated.

Connect the universal bornier in place of the computer and check the **resistance value** of the motor as well as the **insulation against earth and against + 12 V** of the connections by measuring between:
Track 24 and **track 25** of computer connector B or **tracks 9** and **10** of the new 2005 computer connector B.
The motor should have a resistance of approximately: **36** Ω at 20˚C.

If the value is incorrect, or if the fault is still present due to a poor or loose connection: **remove the dashboard** to gain access to the footwell/ventilation distribution motor.

Check **the connection and condition** of the footwell distribution motor connector.
Replace the connector if necessary.

Check that the distribution motor flap is not **jammed**.
Repair if necessary.

Connect the universal bornier in place of the computer and check the **insulation, continuity and the absence of interference resistance** of the following connections:

computer connector B **track 24** ⟶ **track A** of the footwell distribution motor
computer connector B **track 25** ⟶ **track B** of the footwell distribution motor

or:

computer connector B **track 9** ⟶ **track A** of the footwell distribution motor
computer connector B **track 10** ⟶ **track B** of the footwell distribution motor

For the new redesign 2005 computer.
Repair if necessary.

Check the resistance value of the distribution motor by measuring between:
track A and **track B** of the distribution motor connector and replace the motor if the resistance is not approximately: **36** Ω at 20˚C.

If the fault is still present, **replace** the footwell distribution motor.

AFTER REPAIR	Follow the instructions to confirm repair. Clear the stored faults. Deal with any other faults.

GETtheMANUALS.org

DF030 PRESENT	COMPRESSOR OUTPUT CONTROL CIRCUIT CO : open circuit CC : short circuit

NOTES	**Special notes:** The capacity of the compressor is electrically controlled by a control valve on the F4R, G9T, and M9R engines. V4Y and P9X engines are not fitted with this valve, the capacity is pneumatically controlled (CALSONIC V6 and Denso 7SBU16 compressors). This fault finding procedure **can therefore not be carried out on vehicles fitted with** V4Y and P9X engines.

Check **the connection and condition** of the compressor capacity control connector. Repair if necessary.
With the ignition on, check for **+ 12 V** on **track B** of the compressor output control connector. Repair if necessary.
Connect the universal bornier in place of the computer and check the **insulation, continuity and the absence of interference resistance** on the following connection: Computer connector A **track 7** ⟶ Output control solenoid valve **track A** Repair if necessary.
Measure the resistance between: **track A** and **track B** of the compressor output control solenoid valve; replace the compressor if the resistance is not approximately: **18.5 Ω** ± 0.5% at 25˚C.
If the fault is still present, the climate control computer may be damaged, contact Techline.

AFTER REPAIR	Clear the stored faults. Deal with any other faults.

GETtheMANUALS.org

DF033 PRESENT OR STORED	REFRIGERANT FLUID CHARGE

NOTES	**Conditions for applying the fault finding procedure to stored faults:** Once the fault is stored, it is difficult to reproduce (**6** consecutive journeys required); the fault finding procedure should be applied even if the fault is only stored.
	Special notes: The refrigerant fill is measured following road tests at 54 mph (90 km/h) (maximum capacity). The fault will be confirmed after the 6th test, if the above conditions are observed. This fault only concerns compressors with electrical capacity control. In vehicles with pneumatically controlled compressors, the compressor compensates for the loss of refrigerant by reducing its capacity. Consequently, the air conditioning becomes less efficient.
	Priorities when dealing with a number of faults: – Deal with fault **DF002 REFRIGERANT PRESSURE SENSOR CIRCUIT** first, if it is present or stored.

Then check for refrigerant leaks. Repair if necessary.
Check the **level of refrigerant** (for reference, the amount of refrigerant to use is 650 g ± 25 g).
Clear the refrigerant charge fault before starting the engine and carrying out any tests.

AFTER REPAIR	Clear the stored faults. Deal with any other faults.

GETtheMANUALS.org

DF043 PRESENT	MULTIPLEX NETWORK DEF : apply the multiplex network fault finding procedure 1.DEF: apply the multiplex network fault finding procedure

NOTES	None.

Check **the connection and condition** of the climate control control panel connectors.
Repair if necessary.

Connect the universal bornier in place of the computer and check the **insulation, continuity and the absence of interference resistance** of the following connections:

computer connector A **track 9** ⟶ **track CAN L** of the UCH
computer connector A **track 10** ⟶ **track CAN H** of the UCH
(refer to diagrams for the vehicle and model year concerned).

Repair if necessary.

If the fault is still present, **carry out fault finding** on the multiplex network.

AFTER REPAIR	Clear the stored faults. Deal with any other faults.

GETtheMANUALS.org

DF082 PRESENT OR STORED	PASSENGER COMPARTMENT BLOWER MOTOR CIRCUIT

NOTES	**Conditions for applying the fault finding procedure to stored faults:** The fault is declared present after: the ventilation is switched on.
	Special notes: An open circuit on track 27 (passenger compartment fan unit power module control) will not be detected by the diagnostic tool but will result in customer complaints (**ALP 6** and **ALP 9**) as the passenger compartment climate control will no longer work.

Check **the connection and condition** of the black 2 ∞ 5-track connector bolted underneath the glove compartment as well as **the connection and condition** of the following three connectors:
– the blue 2-track connector and the black 4-track connector of the fan unit power module.
– the black 2-track connector of the fan.
Repair if necessary.

With the ignition on, check for **+12 V** on **track B5** and an earth on **track B4** of the black 2 x 5-track connector of the passenger compartment fan unit.

Connect the universal bornier in place of the computer and check the **insulation, continuity and the absence of interference resistance** of the following connections:
computer connector A **track 13** ⟶ **track A2** of the power module
computer connector A **track 27** ⟶ **track A3** of the power module
Repair if necessary (refer to the diagram in the HELP section).

Disconnect the black 2-track blower connector and **measure the resistance** of the blower between track A and track B.
Replace the fan if its resistance is zero or infinite.

If the fault is still present, **replace** the fan unit power module.

AFTER REPAIR	Clear the stored faults. Follow the instructions to confirm repair. Deal with any other faults.

GETtheMANUALS.org

DF090 PRESENT	COMPRESSOR CONTROL CO : open circuit CC : short circuit

NOTES	**Conditions for applying the fault finding procedure to stored faults:** The fault is declared present after the ventilation is switched on.

Check **the connection and condition** of the compressor clutch connector. Repair if necessary.
With the ignition on, check for **+ 12 V** on **track B** of the compressor clutch connector.
Connect the universal bornier in place of the computer and check the **insulation, continuity and the absence of interference resistance** on the following connection: computer connector A **track 15** ⟶ **track A** of the compressor clutch Repair if necessary.
Measure the resistance between: **track A** and **track B** of the compressor clutch and replace the compressor if the resistance is not between 3 and 4 Ω.

AFTER REPAIR	Clear the stored faults. Deal with any other faults.

GETtheMANUALS.org

DF092 PRESENT	INJECTION MULTIPLEX SIGNAL ABSENT DEF : apply the multiplex network fault finding procedure 1.DEF: apply the multiplex network fault finding procedure

NOTES	None.

Check **the connection and condition** of the climate control control panel connectors.
Repair if necessary.

Connect the universal bornier in place of the computer and check the **insulation, continuity and the absence of interference resistance** on the following connections:

computer connector A **track 9** ⟶ **track CAN L** of the injection computer
computer connector A **track 10** ⟶ **track CAN H** of the injection computer
(refer to diagrams for the vehicle and model year in question).

Repair if necessary.

If the fault is still present, **perform fault finding** on the multiplex network and the injection system.

AFTER REPAIR	Clear the stored faults. Deal with any other faults.

GETtheMANUALS.org

DF093 PRESENT	NO UCH MULTIPLEX SIGNAL DEF : apply the multiplex network fault finding procedure 1.DEF: apply the multiplex network fault finding procedure

NOTES	None.

Check **the connection and condition** of the air conditioning control panel connectors.
Repair if necessary.

Connect the universal bornier in place of the computer and check the **insulation, continuity and the absence of interference resistance** on the following connections:

computer connector A **track 9** → **track CAN L** of the UCH
computer connector A **track 10** → **track CAN H** of the UCH
(refer to diagrams for the vehicle and model year in question).

Repair if necessary.

If the fault is still present, **carry out fault finding** on the multiplex network.

AFTER REPAIR	Clear the stored faults. Deal with any other faults.

GETtheMANUALS.org

DF094 PRESENT	NO ABS MULTIPLEX SIGNAL DEF : apply the multiplex network fault finding procedure 1.DEF: apply the multiplex network fault finding procedure

NOTES	None.

Check **the connection and condition** of the air conditioning control panel connectors.
Repair if necessary.

Connect the universal bornier in place of the computer and check the **insulation, continuity and the absence of interference resistance** of the following connections:

computer connector A **track 9** ⟶ **track CAN L** of the ABS computer
computer connector A **track 10** ⟶ **track CAN H** of the ABS computer
(refer to diagrams for the vehicle and model year in question).

Repair if necessary.

If the fault is still present, **carry out fault finding** on the multiplex network.

AFTER REPAIR	Clear the stored faults. Deal with any other faults.

GETtheMANUALS.org

NOTES	Only carry out this conformity check after a **full check** with the diagnostic tool (the values shown in this conformity check are given as a guide only). **Test conditions:** engine off, ignition on, **climate control switched off**.

Main screen

Order	Function	Parameter or Status checked or Action		Display and Notes	Fault finding
1	Air conditioning	**ET001:**	+ 12 V accessories feed	**PRESENT**	None
2		**ET007:**	Computer + after ignition feed	**PRESENT**	Check the **insulation, continuity and absence of interference resistance** on the computer earths and feeds:
3		**ET034:**	+ 12 V battery feed	**PRESENT**	**None.**
4		**ET035:**	heated rear screen through injection	NO	**This status is only for the Particle Filter (FAP) function.**
5		**ET036:**	with the engine running	NO	**None.**
6		**PR014:**	computer feed voltage	11 V < PR014 < 15 V	**None.**
7		**PR015:**	Engine speed	0 rpm	**None.**
8		**PR095:**	Vehicle speed	0 mph or km/h	**None.**

GETtheMANUALS.org

NOTES	Only carry out this conformity check after a **full check** with the diagnostic tool (the values shown in this conformity check are given as a guide only). **Test conditions:** engine off, ignition on, **climate control switched off**.

Function: Air conditioning
Sub-function: User selection

Order	Function	Parameter or Status checked or Action		Display and Notes	Fault finding
1	Air conditioning	**ET002:**	+ 12 V side lights feed	**PRESENT** when the lights are lit and **ABSENT** if not	In the event of a lighting fault, see **ALP 13**.
2		**ET007:**	Computer + after ignition feed	**PRESENT**	Check the **insulation, continuity and absence of interference resistance** on the computer earths and feeds
3		**ET022:**	heated rear screen command	**INACTIVE** (the control is only authorised when the engine is running)	In the event of a fault, refer to the interpretation of this status.
4		**ET028:**	electric heated windscreen control	**INACTIVE** (the control is only authorised when the engine is running)	In the event of a fault, consult the interpretation for this status.
5		**ET033:**	automatic mode	**YES** if climate control requested in automatic mode (**AUTO** pressed). **NO** if not.	In the event of a fault, consult the interpretation for this status.
6		**ET050:**	air conditioning mode	**YES** if climate control requested in manual mode (**AC** button pressed). **NO** if not.	In the event of a fault, refer to the interpretation of this status.

GETtheMANUALS.org

NOTES	Only carry out this conformity check after a **full check** with the diagnostic tool (the values shown in this conformity check are given as a guide only). **Test conditions:** engine off, ignition on, **climate control switched off**.

Function: Air conditioning
Sub-function: User selection (continued)

Order	Function	Parameter or Status checked or Action	Display and Notes	Fault finding
1	Air conditioning	**PR102:** LEDs lighting up	**Lights off: 100 %** **Lights on:** **1 %** ± 5 % with dim lighting **100 %** ± 5 % with full lighting	In the event of a lighting fault, see **ALP 13**.
2		**PR103:** 0 V controlled by dimmer	**Lights off: 0 V.** **Lights on:** **8 V + 1 V** minimum lighting **0 V** maximum lighting	In the event of a lighting fault, see **ALP 13**.

GETtheMANUALS.org

NOTES	Only carry out this conformity check after a **full check** with the diagnostic tool (the values shown in this conformity check are given as a guide only). **Test conditions:** engine off, ignition on, **climate control switched off**.

Function: Air conditioning
Sub-function: Passenger compartment fan

Order	Function	Parameter or Status checked or Action		Display and Notes	Fault finding
1	Air conditioning	**PR008:**	Fan speed	**from 4 % to 95 %**	In the event of a fault **apply the fault finding procedure** for fault: **DF082** Passenger compartment ventilation motor circuit. Note: To check the consistency of these signals, refer to the fault finding procedure for parameters **PR008** and **PR019**.
2		**PR019:**	PWM value Passenger compartment fan unit (PWM: modulated control voltage)	**0 to 100 %**	
3		**ET021:**	recirculation motor command	**STATUS 1** recirculation motor: recirculation or **STATUS 2** recirculation motor: external air	In the event of a fault **apply the fault finding procedure** for fault: **DF021** Recirculation motor circuit.
4		**PR023:**	position of footwell/ ventilation distribution flaps	**0 %** closed to **100 %** open	In the event of a fault **apply the fault finding procedure** for faults: **DF028** Footwell/ ventilation distribution motor circuit and **DF029**, Distribution/de-icing motor circuit.

GETtheMANUALS.org

NOTES	Only carry out this conformity check after a **full check** with the diagnostic tool (the values shown in this conformity check are given as a guide only). **Test conditions:** engine off, ignition on, **climate control switched off**.

Function: Air conditioning
Sub-function: Cold loop

Order	Function	Parameter or Status checked or Action	Display and Notes	Fault finding
1	Air conditioning	**ET003:** AC inhibited by injection computer	YES	YES normal when engine not running
2		**ET005:** refrigerant under-pressure	**NO**	If the status displays YES, consult the fault finding procedure for status **ET005**.
3		**ET006:** refrigerant over-pressure	**NO**	If the status displays YES, consult the fault finding procedure for status **ET006**.
4		**ET020:** compressor control	**INACTIVE**	Compressor control inactive when engine not running (inhibited).
5		**ET023:** Low-speed fan assembly	**INACTIVE**	**None.**
6		**ET024:** High-speed fan assembly	**INACTIVE**	**None.**
7		**ET027:** fast idle speed control	**INACTIVE**	**None.**
8		**ET037:** cooling fan assembly request by injection	**NO**	**None.**
9		**ET140:** air conditioning request	**INACTIVE**	**None.**

GETtheMANUALS.org

NOTES	Only carry out this conformity check after a **full check** with the diagnostic tool (the values shown in this conformity check are given as a guide only). **Test conditions:** engine off, ignition on, **climate control switched off**.

Function: Air conditioning
Sub-function: Cold loop (continued)

Order	Function	Parameter or Status checked or Action	Display and Notes	Fault finding
10	Air conditioning	**PR001:** internal temperature	**interior temperature ± 5 °C**	In the event of a fault **apply the fault finding procedure** for fault: **DF007** Internal temperature sensor circuit.
11		**PR002:** external temperature	**external temperature ± 5 °C**	In the event of a fault, run **fault finding on the multiplex network**.
12		**PR003:** evaporator temperature	**0 < X < 5 °C** if the engine is cold and: **- 10 < X < 15 °C** if the engine has been running.	In the event of a fault **apply the fault finding procedure** for fault: **DF020** Evaporator temperature sensor circuit.
13		**PR004:** coolant temperature	**engine coolant temperature ± 5 °C**	In the event of a fault, perform **fault finding on the injection system** (which is producing the signal).
14		**PR005:** power absorbed signal	**0 W < X < 300 W** (ambient temperature 23 °C)	For more information, refer to the fault finding procedure for parameter **PR005**.
15		**PR006:** solar radiation	from **0 W** for zero solar radiation to **500 W** for maximum solar radiation.	In the event of a fault **apply the fault finding procedure** for fault: **DF026** Solar radiation sensor circuit.
16		**PR007:** humidity	**0 to 100 %**	In the event of a fault **apply the fault finding procedure** for fault: **DF027** Humidity sensor circuit.

GETtheMANUALS.org

NOTES	Only carry out this conformity check after a **full check** with the diagnostic tool (the values shown in this conformity check are given as a guide only). **Test conditions:** engine off, ignition on, **climate control switched off**.

Function: Air conditioning
Sub-function: Cold loop (continued)

Order	Function	Parameter or Status checked or Action	Display and Notes	Fault finding
17	Air conditioning	**PR016:** refrigerant pressure	**1 bar < X < 15 bar**	In the event of a fault **apply the fault finding procedure** for fault: **DF002** Refrigerant pressure sensor circuit.
18		**PR017:** **CO** inlet toxicity	**0 to 100 %** Note: **If there is a fault with the sensor, the value displayed is 0 %**	In the event of a fault, **apply the procedure for this parameter**. **Special note:** The toxicity sensor may be fitted on the vehicle, depending on the equipment level.
19		**PR018:** **NO** inlet toxicity	**0 to 100 %** Note: **If there is a fault with the sensor, the value displayed is 0 %**	In the event of a fault, **apply the procedure for this parameter**. **Special note:** The toxicity sensor may be fitted on the vehicle, depending on the equipment level.
20		**PR020:** position of left-hand mixing flap	**0 %** maximum cold to **100 %** maximum heat	In the event of a fault **apply the fault finding procedure** for fault: **DF019** left-hand side mixing motor circuit.

GETtheMANUALS.org

NOTES	Only carry out this conformity check after a **full check** with the diagnostic tool (the values shown in this conformity check are given as a guide only). **Test conditions:** engine off, ignition on, **climate control switched off**.

Function: Air conditioning
Sub-function: Cold loop (continued)

Order	Function	Parameter or Status checked or Action	Display and Notes	Fault finding
21	Air conditioning	**PR021:** position of right-hand mixing flap	**0 %** maximum cold to **100 %** maximum heat	In the event of a fault **apply the fault finding procedure** for fault: **DF018** Right-hand mixing motor circuit.
22		**PR104:** compressor output control	**0 %** (no capacity control when the engine is stopped).	**None.**

GETtheMANUALS.org

NOTES	Only carry out this conformity check after a **full check** with the diagnostic tool (the values shown in this conformity check are given as a guide only). **Test conditions:** engine off, ignition on, **climate control switched off**.

Function: Air conditioning
Sub-function: Heating

Order	Function	Parameter or Status checked or Action	Display and Notes	Fault finding
1	Air conditioning	**PR001:** internal temperature	**interior temperature ± 5 °C**	In the event of a fault **apply the fault finding procedure** for fault: **DF007** Internal temperature sensor circuit.
2		**PR002:** external temperature	**external temperature ± 5 °C**	In the event of a fault, run **fault finding on the multiplex network**.
3		**PR003:** evaporator temperature	**0 < X < 5 °C** if the engine is cold and: **- 10 < X < 15 °C** if the engine has been running.	In the event of a fault **apply the fault finding procedure** for fault: **DF020** Evaporator temperature sensor circuit.
4		**PR004:** coolant temperature	**engine coolant temperature ± 5 °C**	In the event of a fault, perform **fault finding on the injection system** (which is producing the signal).
5		**PR020:** position of left-hand mixing flap	**0 %** maximum cold to **100 %** maximum heat	In the event of a fault **apply the fault finding procedure** for fault: **DF019** left-hand side mixing motor circuit.
6		**PR021:** position of right-hand mixing flap	**0 %** maximum cold to **100 %** maximum heat	In the event of a fault **apply the fault finding procedure** for fault: **DF018** Right-hand mixing motor circuit.

GETtheMANUALS.org

NOTES	Only carry out this conformity check after a **full check** with the diagnostic tool (the values shown in this conformity check are given as a guide only). **Test conditions:** engine off, ignition on, **climate control switched off**.

Function: Air conditioning
Sub-function: Heating (continued)

Order	Function	Parameter or Status checked or Action		Display and Notes	Fault finding
7	Air conditioning	**PR023:**	position of footwell/ ventilation distribution flaps	**0 %** closed to **100 %** open	In the event of a fault **apply the fault finding procedure** for faults: **DF028** Footwell/ ventilation distribution motor circuit and **DF029**, Distribution/de-icing motor circuit.
8		**ET021:**	recirculation motor command	**STATUS 1** recirculation motor: recirculation or **STATUS 2** air recirculation motor: external air	In the event of a fault **apply the fault finding procedure** for fault: **DF021** Recirculation motor circuit.
9		**ET022:**	heated rear screen command	**INACTIVE** (the control is only authorised when the engine is running)	In the event of a fault, consult the interpretation for this status.

GETtheMANUALS.org

NOTES	Only carry out this conformity check after a **full check** with the diagnostic tool (the values shown in this conformity check are given as a guide only). **Test conditions:** engine at idle speed, **air conditioning switched on**.

Main screen

Order	Function	Parameter or Status checked or Action		Display and Notes	Fault finding
1	Air conditioning	**ET001:**	+ 12 V accessories feed	**PRESENT**	None
2		**ET007:**	Computer + after ignition feed	**PRESENT**	Check the **insulation, continuity and absence of interference resistance** on the computer earths and feeds:
3		**ET034:**	+ 12 V battery feed	**PRESENT**	**None.**
4		**ET035:**	heated rear screen through injection	NO	**This status is only for the Particle Filter (FAP) function.**
5		**ET036:**	with the engine running	YES	**None.**
6		**PR014:**	computer feed voltage	11 V < PR014 < 15 V	**None.**
7		**PR015:**	Engine speed	Indicates the idle speed	**None.**
8		**PR095:**	Vehicle speed	0 mph or km/h	**None.**

GETtheMANUALS.org

NOTES	Only carry out this conformity check after a **full check** with the diagnostic tool (the values shown in this conformity check are given as a guide only). **Test conditions:** engine at idle speed, **air conditioning switched on**.

Function: Air conditioning
Sub-function: User selection

Order	Function	Parameter or Status checked or Action		Display and Notes	Fault finding
1	Air conditioning	**ET002:**	+ 12 V side lights feed	**PRESENT** when the lights are lit and **ABSENT** if not	In the event of a lighting fault, see **ALP 13**.
2		**ET007:**	Computer + after ignition feed	**PRESENT**	Check the **insulation, continuity and absence of interference resistance** on the computer earths and feeds:
3		**ET022:**	heated rear screen command	**ACTIVE** when a key is pressed and the engine running, **INACTIVE** otherwise	In the event of a fault, consult the interpretation for this status.
4		**ET028:**	electric heated windscreen control	**ACTIVE** when a key is pressed and the engine running, **INACTIVE** otherwise	In the event of a fault, refer to the interpretation of this status.
5		**ET033:**	automatic mode	**YES** if climate control requested in automatic mode (**AUTO** pressed). **NO** if not.	In the event of a fault, consult the interpretation for this status.
6		**ET050:**	air conditioning mode	**YES** if climate control requested in manual mode (**AC** button pressed). **NO** if not.	In the event of a fault, consult the interpretation for this status.

GETtheMANUALS.org

NOTES	Only carry out this conformity check after a **full check** with the diagnostic tool (the values shown in this conformity check are given as a guide only). **Test conditions:** engine at idle speed, **air conditioning switched on**.

Function: Air conditioning
Sub-function: User selection (continued)

Order	Function	Parameter or Status checked or Action	Display and Notes	Fault finding
1	Air conditioning	**PR102:** LEDs lighting up	**Lights off: 100 %** **Lights on:** **1 %** ± 5 % with dim lighting **100 %** ± 5 % with full lighting	In the event of a lighting fault, see **ALP 13**.
2		**PR103:** 0 volts controlled by dimmer	**Lights off: 0 V.** **Lights on:** **8 V + 1 V** minimum lighting **0 V** maximum lighting	In the event of a lighting fault, see **ALP 13**.

GETtheMANUALS.org

NOTES	Only carry out this conformity check after a **full check** with the diagnostic tool (the values shown in this conformity check are given as a guide only). **Test conditions:** engine at idle speed, **air conditioning switched on**.

Function: Air conditioning
Sub-function: Passenger compartment fan

Order	Function	Parameter or Status checked or Action	Display and Notes	Fault finding
1	Air conditioning	**PR008:** Fan speed	from **4 %** to **95 %**	In the event of a fault **apply the fault finding procedure** for fault: **DF082** Passenger compartment ventilation motor circuit. Note: To check the consistency of these signals, refer to the fault finding procedure for parameters **PR008** and **PR019**.
2		**PR019:** Passenger compartment blower unit PWM setpoint (PWM: pulse wave modulation)	**0** to **100 %**	
3		**ET021:** recirculation motor command	**STATUS 1** recirculation motor: recirculation or **STATUS 2** recirculation motor: external air	In the event of a fault **apply the fault finding procedure** for fault: **DF021** Recirculation motor circuit.
4		**PR023:** position of footwell/ ventilation distribution flaps	**0 %** closed to **100 %** open	In the event of a fault **apply the fault finding procedure** for faults: **DF028** Footwell/ ventilation distribution motor circuit and **DF029**, Distribution/de-icing motor circuit.

GETtheMANUALS.org

NOTES	Only carry out this conformity check after a **full check** with the diagnostic tool (the values shown in this conformity check are given as a guide only). **Test conditions:** engine at idle speed, **air conditioning switched on**.

Function: Air conditioning
Sub-function: Cold loop

Order	Function	Parameter or Status checked or Action		Display and Notes	Fault finding
1	Air conditioning	**ET003:**	AC inhibited by injection computer	NO	"NO" normal when engine not running.
2		**ET005:**	refrigerant under-pressure	**NO**	If the status displays YES, consult the fault finding procedure for status **ET005**.
3		**ET006:**	refrigerant over-pressure	**NO**	If the status displays YES, consult the fault finding procedure for status **ET006**.
4		**ET020:**	compressor control	**ACTIVE**	Compressor control inactive when engine not running (inhibited).
5		**ET023:**	Low-speed fan assembly	**ACTIVE or INACTIVE**	**None.**
6		**ET024:**	High-speed fan assembly	**ACTIVE or INACTIVE**	**None.**
7		**ET027:**	fast idle speed control	**ACTIVE or INACTIVE**	**None.**
8		**ET037:**	cooling fan assembly request by injection	**YES**	**None.**
9		**ET140:**	air conditioning request	**ACTIVE**	**None.**

GETtheMANUALS.org

NOTES	Only carry out this conformity check after a **full check** with the diagnostic tool (the values shown in this conformity check are given as a guide only). **Test conditions:** engine at idle speed, **air conditioning switched on**.

Function: Air conditioning
Sub-function: Cold loop (continued)

Order	Function	Parameter or Status checked or Action	Display and Notes	Fault finding
10	Air conditioning	**PR001:** internal temperature	**interior temperature ± 5 °C**	In the event of a fault **apply the fault finding procedure** for fault: **DF007** Internal temperature sensor circuit.
11		**PR002:** external temperature	**external temperature ± 5 °C**	In the event of a fault, run **fault finding on the multiplex network**.
12		**PR003:** evaporator temperature	**- 5 < X < 25 °C** after operating for a few minutes.	In the event of a fault **apply the fault finding procedure** for fault: **DF020** Evaporator temperature sensor circuit.
13		**PR004:** coolant temperature	**engine coolant temperature ± 5 °C**	In the event of a fault, perform **fault finding on the injection system** (which is producing the signal).
14		**PR005:** power absorbed signal	**100 W < X < 1700 W** (ambient temperature 23 °C)	For more information, refer to the fault finding procedure for parameter **PR005**.
15		**PR006:** solar radiation	From **0 W** for zero solar radiation to **500 W** for maximum solar radiation.	In the event of a fault **apply the fault finding procedure** for fault: **DF026** Solar radiation sensor circuit.
16		**PR007:** humidity	**0** to **100 %**	In the event of a fault **apply the fault finding procedure** for fault: **DF027** Humidity sensor circuit.

GETtheMANUALS.org

NOTES	Only carry out this conformity check after a **full check** with the diagnostic tool (the values shown in this conformity check are given as a guide only). **Test conditions:** engine at idle speed, **air conditioning switched on**.

Function: Air conditioning
Sub-function: Cold loop (continued)

Order	Function	Parameter or Status checked or Action	Display and Notes	Fault finding
17	Air conditioning	**PR016:** refrigerant pressure	**3 bar < X < 25 bar**	In the event of a fault **apply the fault finding procedure** for fault: **DF002** Refrigerant pressure sensor circuit.
18		**PR017:** **CO** inlet toxicity	**0 to 100 %** Note: **If there is a fault with the sensor, the value displayed is 0 %**	In the event of a fault, **apply the procedure for this parameter**. **Special note:** The toxicity sensor may be fitted on the vehicle, depending on the equipment level.
19		**PR018:** **NO** inlet toxicity	**0 to 100 %** Note: **If there is a fault with the sensor, the value displayed is 0 %**	In the event of a fault, **apply the procedure for this parameter**. **Special note:** The toxicity sensor may be fitted on the vehicle, depending on the equipment level.
20		**PR020:** position of left-hand mixing flap	**0 %** maximum cold to **100 %** maximum heat	In the event of a fault **apply the fault finding procedure for fault DF019** Left-hand mixing motor circuit.

GETtheMANUALS.org

NOTES	Only carry out this conformity check after a **full check** with the diagnostic tool (the values shown in this conformity check are given as a guide only). **Test conditions:** engine at idle speed, **air conditioning switched on**.

Function: Air conditioning
Sub-function: Cold loop (continued)

Order	Function	Parameter or Status checked or Action	Display and Notes	Fault finding
21	Air conditioning	**PR021:** position of right-hand mixing flap	**0 %** maximum cold to **100 %** maximum heat	In the event of a fault **apply the fault finding procedure** for fault: **DF018** Right-hand mixing motor circuit.
22		**PR104:** compressor output control	**0 to 100 %** for compressors controlled by solenoid valve. **0 %** for pneumatically controlled compressors.	**None.**

GETtheMANUALS.org

NOTES	Only carry out this conformity check after a **full check** with the diagnostic tool (the values shown in this conformity check are given as a guide only). **Test conditions:** engine at idle speed, **air conditioning switched on**.

Function: Air conditioning
Sub-function: Heating

Order	Function	Parameter or Status checked or Action	Display and Notes	Fault finding
1	Air conditioning	**PR001:** internal temperature	**interior temperature ± 5 °C**	In the event of a fault **apply the fault finding procedure** for fault: **DF007** Internal temperature sensor circuit.
2		**PR002:** external temperature	**interior temperature ± 5 °C**	In the event of a fault, run **fault finding on the multiplex network**.
3		**PR003:** evaporator temperature	**- 5 < X < 25 °C** after operating for a few minutes.	In the event of a fault **apply the fault finding procedure** for fault: **DF020** Evaporator temperature sensor circuit.
4		**PR004:** coolant temperature	**engine coolant temperature ± 5 °C**	In the event of a fault, perform **fault finding on the injection system** (which is producing the signal).
5		**PR020:** position of left-hand mixing flap	**0 %** maximum cold to **100 %** maximum heat	In the event of a fault **apply the fault finding procedure** for fault: **DF019** left-hand side mixing motor circuit.
6		**PR021:** position of right-hand mixing flap	**0 %** maximum cold to **100 %** maximum heat	In the event of a fault **apply the fault finding procedure** for fault: **DF018** Right-hand mixing motor circuit.

GETtheMANUALS.org

NOTES	Only carry out this conformity check after a **full check** with the diagnostic tool (the values shown in this conformity check are given as a guide only). **Test conditions:** engine at idle speed, **air conditioning switched on**.

Function: Air conditioning
Sub-function: Heating (continued)

Order	Function	Parameter or Status checked or Action		Display and Notes	Fault finding
7	Air conditioning	**PR023:**	position of footwell/ ventilation distribution flaps	**0 %** closed to **100 %** open	In the event of a fault **apply the fault finding procedure** for faults **DF028** Footwell/ ventilation distribution motor circuit and **DF029**, Distribution/de-icing motor circuit.
8		**ET021:**	recirculation motor command	**STATUS 1** recirculation motor: recirculation or **STATUS 2** air recirculation motor: external air	In the event of a fault **apply the fault finding procedure** for fault: **DF021** Recirculation motor circuit.
9		**ET022:**	heated rear screen command	**ACTIVE** when a key is pressed and the engine running, **INACTIVE** otherwise	In the event of a fault, consult the interpretation for this status.

GETtheMANUALS.org

Index	Diagnostic tool title
ET001	+ 12 V accessories feed
ET002	+ 12 V side lights feed
ET003	AC inhibited by injection computer
ET005	Refrigerant: underpressure
ET006	Refrigerant: over-pressure
ET007	+ after ignition computer feed
ET020	Compressor control
ET021	Air recirculation motor control
ET022	Heated rear screen switch
ET023	Low-speed fan assembly
ET024	High-speed fan assembly
ET027	Fast idle speed control
ET028	Electrically heated windscreen command
ET033	Automatic mode
ET034	+ 12 V battery feed
ET035	Heated rear screen through injection
ET036	Engine running
ET037	Cooling fan unit request through injection
ET050	Air conditioning mode
ET140	Air conditioning request

GETtheMANUALS.org

ET005	REFRIGERANT: UNDERPRESSURE

NOTES	The under-pressure status rises if the pressure reading taken by the sensor is **below 2 bar**.
	There must be no present or stored faults. (in particular, faults: **DF033** Refrigerant load and **DF002** Refrigerant pressure sensor circuit).
	Special note: The underpressure status **inhibits** air conditioning operation.

Check the **connection and condition** of the refrigerant fluid pressure sensor connector. Replace the connector if necessary.
Connect the bornier in place of the computer and check the **insulation, continuity and the absence of interference resistance** on the following connections: computer connector A **track 8** ⟶ **track A** of the pressure sensor computer connector A **track 11** ⟶ **track B** of the pressure sensor computer connector A **track 3** ⟶ **track C** of the pressure sensor Repair if necessary.
With the ignition switched on, check that the sensor is correctly supplied by the computer across: **track A** and **track B** of the sensor. If the voltage is not **5 V**, replace the climate control computer.
Ensure that there are no refrigerant fluid **leaks** in the climate control system.
If the fault is still present, **check the refrigerant fluid (650 g ± 25 g)**. Refill if necessary.
If the refrigerant level is correct, there are no leaks in the climate control system and the pressure sensor connections checks are correct: **replace** the pressure sensor.

AFTER REPAIR	Repeat the conformity check from the start.

GETtheMANUALS.org

ET006	REFRIGERANT: OVERPRESSURE

NOTES	The overpressure status is set if the pressure reading taken by the sensor is **above 27 bar (relative)**.
	There must be no present or stored faults. (in particular faults: **DF033** Refrigerant charge, **DF030** Compressor capacity control circuit and **DF002** Refrigerant pressure circuit).
	Special note: The overpressure status **inhibits** air conditioning operation.

For electrically controlled capacity:
Check the **connection and condition** of the refrigerant fluid pressure sensor connector.
Replace the connector if necessary.

Connect the bornier in place of the computer and check the **insulation, continuity and the absence of interference resistance** of the following connections:

computer connector A **track 8** ⟶ **track A** of the pressure sensor
computer connector A **track 11** ⟶ **track B** of the pressure sensor
computer connector A **track 3** ⟶ **track C** of the pressure sensor

Repair if necessary.

Display parameter: **PR016** Refrigerant pressure, and check that the pressure readings drop sharply (the parameter should not remain static) after the climate control has been turned off.
If the pressure does not fall, **replace** the refrigerant pressure sensor.

Check that **the capacity control is being correctly carried out** by displaying parameter **PR104** Compressor capacity control:
– With the engine off, this parameter should display 0 % (maximum capacity).
– With the engine running and the air conditioning switched on, this parameter should display a value between 0 and 100 % (there is no standard control case because there are multiple conditions for this case).

AFTER REPAIR	Repeat the conformity check from the start.

GETtheMANUALS.org

ET006 **CONTINUED 1**	

If the capacity does not vary and the control solenoid valve is not faulty:
With the ignition on, check for **12 V feed** on **track B** of the capacity control solenoid valve.
Repair if necessary.

If the capacity still does not vary: **check the refrigerant level** (650 g ± 25 g) as a shortage of refrigerant may be corrected by the climate control system, which will raise the compressor capacity (in order to maintain climate control efficiency).
Refill if necessary.

If the refrigerant fluid level is correct and the capacity control is operating correctly (feed on track B of the solenoid valve and an earth control on track A) there may be a mechanical fault on the compressor capacity control card.
If this is the case **replace the air conditioning compressor**.

For pneumatically controlled capacity:
Check the **connection and condition** of the refrigerant pressure sensor connector.
Replace the connector if necessary.

Connect the bornier in place of the computer and check **the insulation, continuity and absence of interference resistance** on the following connections:

computer connector A **track 8** → **track A** of the pressure sensor
computer connector A **track 11** → **track B** of the pressure sensor
computer connector A **track 3** → **track C** of the pressure sensor

Repair if necessary.

Display parameter: **PR016** Refrigerant pressure, and check that the pressure readings drop sharply (the parameter should not remain static) after the climate control has been turned off.
If the pressure does not fall, **replace** the refrigerant pressure sensor.

If the refrigerant pressure is correct, there may be a mechanical fault on the compressor capacity control card.
If this is the case **replace the air conditioning compressor**.

AFTER REPAIR	Repeat the conformity check from the start.

GETtheMANUALS.org

ET022	HEATED REAR SCREEN CONTROL

NOTES	If the active/inactive status is inconsistent, apply the interpretation of this status.

Check for the **presence** of the heated rear screen relay.
Check **the condition of the clips** on the heated rear screen relay, located on the relay plate. Replace the clips if necessary.
With the ignition on, check for **+ 12 V** on **track 1** of the relay.
Connect the universal bornier in place of the computer and check the **insulation, continuity and the absence of interference resistance** on the following connection: computer connector A **track 12** ⟶ **track 2** of the heated rear screen relay Repair if necessary.
Measure **the resistance** of the relay between: **track 1** and **track 2** of the heated rear screen relay and replace the relay if the resistance is not approximately: **60 Ω** at 20 ˚C.

AFTER REPAIR	Follow the instructions to confirm repair. Clear the stored faults. Deal with any other faults.

GETtheMANUALS.org

ET023	LOW-SPEED FAN ASSEMBLY

NOTES	If the fan unit is not operating as normal, carry out a complete check on the fan unit circuit (details under fault finding - injection).

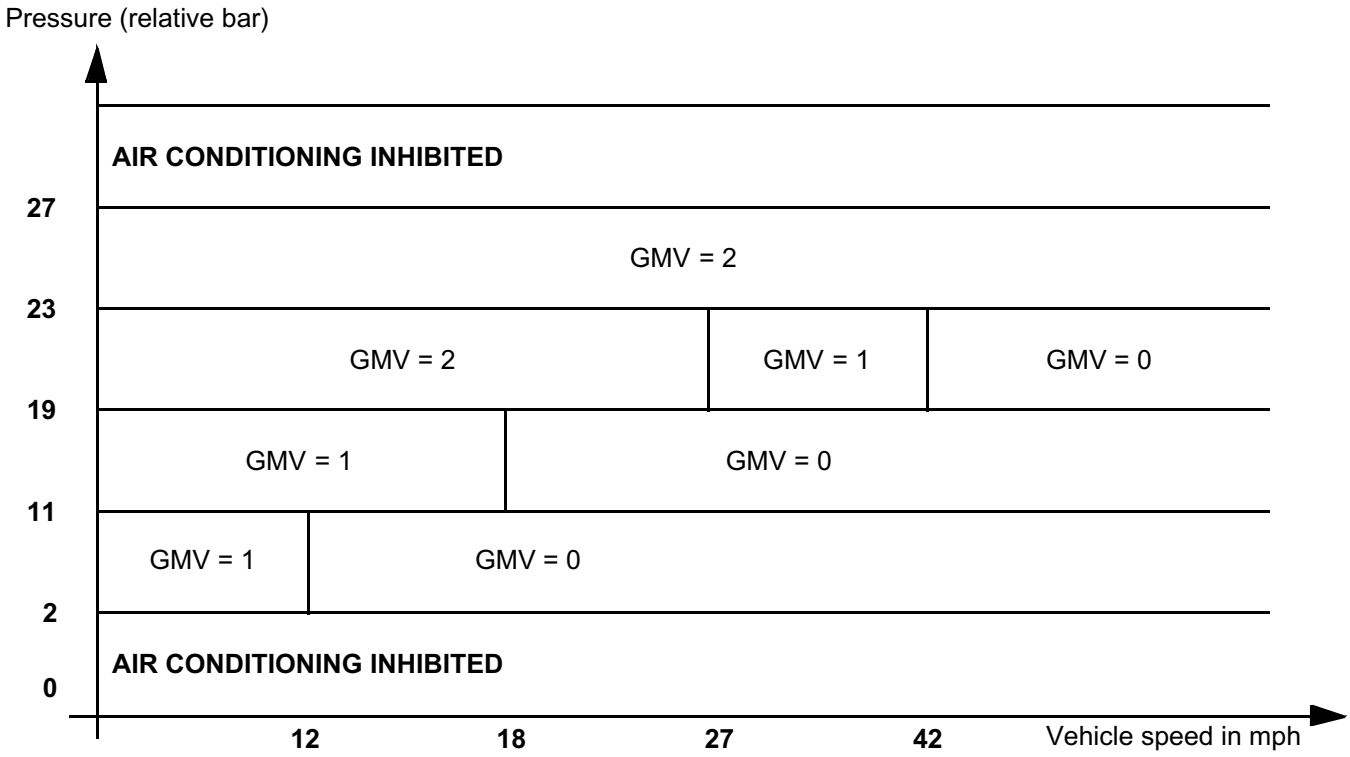

GMV = 1 Low-speed engine cooling fan
GMV = 2 High-speed engine cooling fan
GMV = 0 Cooling fan off

The fan unit is not used for vehicle speeds above 42 mph (70 km/h).
Except in rare cases, or despite the above speed being reached, the pressure is greater than 23 bar e.g.: (when driving behind a lorry).
When the vehicle is stationary, the fan unit is always used, and runs at low speed when the high pressure is lower than 19 bar (relative), and at high speed if not.
When the vehicle is being driven, the fan unit may either not operate or operate at high or low speed depending on the condenser outlet pressure and the vehicle speed.

AFTER REPAIR	Repeat the conformity check from the start.

GETtheMANUALS.org

ET024	HIGH-SPEED FAN ASSEMBLY

NOTES	If the fan unit is not operating as normal, carry out a complete check on the fan unit circuit (details under fault finding - injection).

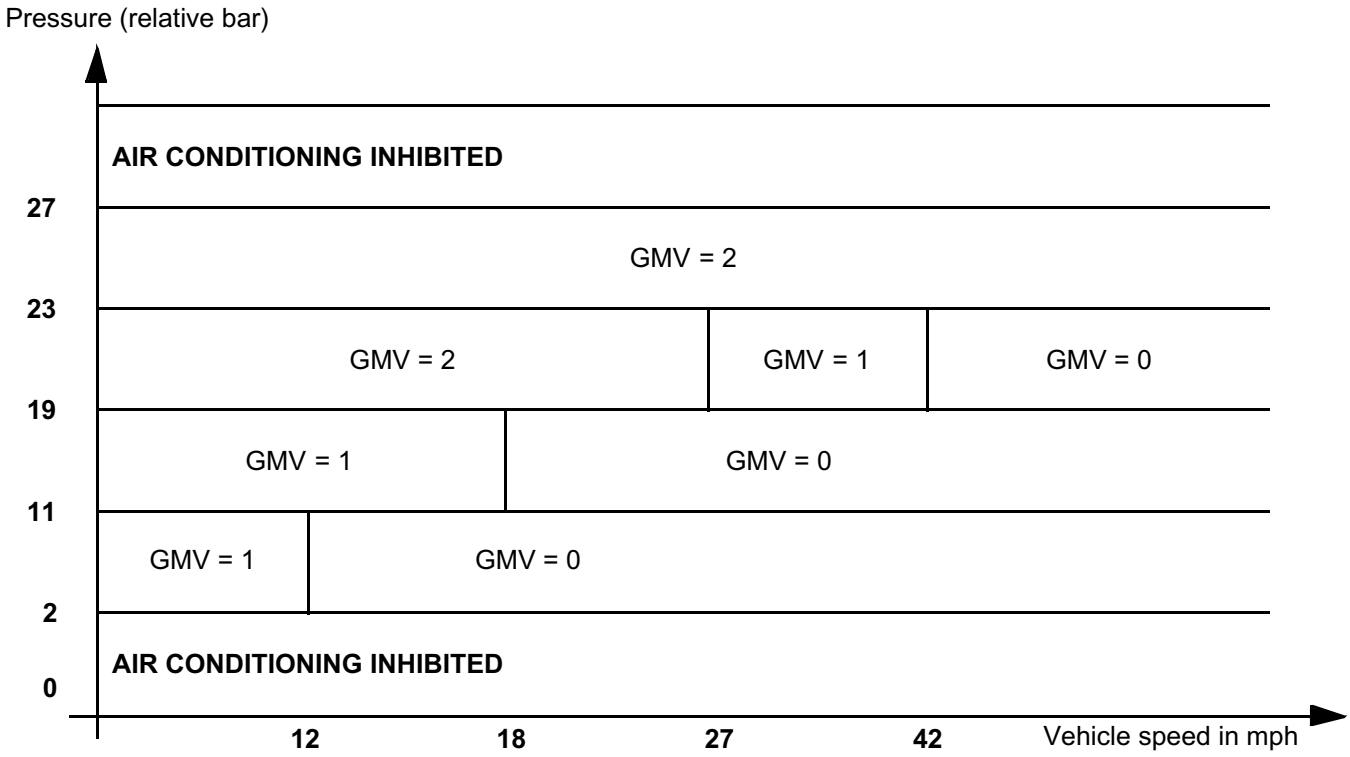

GMV = 1 Low-speed engine cooling fan
GMV = 2 High-speed engine cooling fan
GMV = 0 Cooling fan off

The fan unit is not used for vehicle speeds above 42 mph (70 km/h).
Except in rare cases, or despite the above speed being reached, the pressure is greater than 23 bar e.g.: (when driving behind a lorry).
When the vehicle is stationary, the fan unit always operates, and runs at low speed if the high pressure is lower than 19 bar (relative), and at high speed if not.
When the vehicle is being driven, the fan unit may either not operate or operate at high or low speed depending on the condenser outlet pressure and the vehicle speed.

AFTER REPAIR	Repeat the conformity check from the start.

GETtheMANUALS.org

ET028	HEATED WINDSCREEN COMMAND

NOTES	If the active/inactive status is inconsistent, apply the interpretation of this status.

Check for the **presence** of the heated windscreen relay.
Check **the condition of the clips** on the heated windscreen relay, located on the relay plate. Replace the clips if necessary.
With the ignition on, check for **+ 12 V** on **track 1** of the relay.
Connect the bornier in place of the computer and check **the insulation, continuity and absence of interference resistance** on the following connection: computer connector A **track 4** ⟶ **track 2** of the heated windscreen relay Repair if necessary.
Measure **the resistance** of the relay across **track 1** and **track 2** of the heated windscreen relay. Replace the relay if its resistance is zero or infinity (on average, the resistance should be between 60 to 90 Ω depending on the type of relay).

AFTER REPAIR	Follow the instructions to confirm repair. Clear the stored faults. Deal with any other faults.

GETtheMANUALS.org

ET033	AUTOMATIC MODE

NOTES	None

ET033 AUTOMATIC MODE:

The automatic mode is activated by pressing the **AUTO** button on the control panel. This mode comprises automatic operation of the air distribution, passenger compartment ventilation and compressor engagement functions according to the temperature requested. Only the temperature setpoint (left-hand and right-hand) is made manually.
After the **AUTO** button on the control panel is pressed, status **ET033** should display **YES**. If the status does not display this, check that the warning light on the **AUTO** button lights up at the same time as the **AC** button. If the warning lights do not light up, take a fault reading and carry out a conformity check to verify system conformity. If the fault is still present, contact your **Techline**.

AFTER REPAIR	Repeat the conformity check from the start.

GETtheMANUALS.org

ET050	AIR CONDITIONING MODE

NOTES	None

ET050 AIR CONDITIONING MODE:

The air conditioning mode corresponds to the climate control manual mode. This mode is activated by pressing the **AUTO** button on the control panel. This mode comprises engagement of the compressor (according to the temperature requested). Adjustments to the left-hand and right-hand temperature setpoints, air distribution, passenger compartment ventilation and compressor engagement functions are made manually.
After the **AC** button on the control panel is pressed, status **ET050** should display **YES**. If the status does not display this, check that the warning light on the **AC** button lights up. If the warning light does not light up, take a fault reading and carry out a conformity check to verify system conformity.
If the fault is still present, contact your **Techline**.

AFTER REPAIR	Repeat the conformity check from the start.

GETtheMANUALS.org

Tool parameter	Diagnostic tool title
PR001	Interior temperature
PR002	External temperature
PR003	Evaporator temperature
PR004	Coolant temperature
PR005	Power absorbed signal
PR006	Solar radiation
PR007	Humidity
PR008	Fan unit speed
PR014	Computer feed voltage
PR015	Engine speed
PR016	Refrigerant pressure
PR017	CO input toxicity
PR018	NO input toxicity
PR019	Passenger compartment fan PWM setting
PR020	Position of left-hand mixing flap
PR021	Position of right-hand mixing flap
PR023	Position of footwell/ventilation distribution flap.
PR095	Vehicle speed
PR102	LEDs lighting up
PR103	0 V controlled by dimmer
PR104	Compressor output control

GETtheMANUALS.org

PR005	POWER ABSORBED SIGNAL

NOTES	The values listed below are examples only.

Whether the variable capacity compressor is "pneumatic" or electrically controlled, the power absorbed by the compressor can be anything from several hundred watts to approximately 6 kW depending on weather conditions, vehicle speed and compressor rotation speed.

The power absorbed signal is a function of two parameters:
– The continuous high pressure readings.
– The compressor rotation speed.

The power consumed value calculated by the climate control computer is transmitted to the engine computer. This allows the engine computer to anticipate the effect that the load variations induced by the compressor will have on the vehicle at idle speed and when in motion.

GETtheMANUALS.org

PR008	FAN SPEED

NOTES	The values listed below are examples only.

Controlled values with engine stopped and engine running (tolerance ± 15 %).

Blower speed	SPEED 0	SPEED 1	SPEED 2	SPEED 3	SPEED 4	SPEED 5	SPEED 6	SPEED 7	SPEED 8
Passenger compartment fan PWM setting	**0 %**	**10 %**	**20 %**	**30 %**	**43 %**	**55 %**	**69 %**	**82 %**	**100 %**
Fan unit speed	**4 %**	**15 %**	**27 %**	**38 %**	**52 %**	**68 %**	**82 %**	**95 %**	**95 %**

GETtheMANUALS.org

PR017	CO INPUT TOXICITY

NOTES	**If the CO input toxicity sensor is faulty, the parameter value displayed is 0 %. Fault finding cannot be carried out on this sensor and therefore no fault is associated with it.**

Check the **connection and condition** of the CO input toxicity sensor
Replace the connector if necessary.

Use the universal bornier to check the **insulation, continuity and the absence of interference resistance** of the following connections:

computer connector B **track 16** → **track 5** of the sensor
computer connector B **track 18** → **track 7** of the sensor
computer connector B **track 19** → **track 10** of the sensor

or:

computer connector B **track 1** → **track 5** of the sensor
computer connector B **track 3** → **track 7** of the sensor
computer connector B **track 4** → **track 10** of the sensor

For the new redesign 2005 computer.
Repair if necessary.

If the fault is still present, **replace** the CO input toxicity sensor.

GETtheMANUALS.org

PR018	NO INPUT TOXICITY

NOTES	**If the NO input toxicity sensor is faulty, the parameter value displayed is 0 %. Fault finding cannot be performed on this sensor and therefore there is no associated fault.**

Check the **connection and condition** of the NO input toxicity sensor connector.
Replace the connector if necessary.

Use the universal bornier to check the **insulation, continuity and the absence of interference resistance** of the following connections:

computer connector B **track 16** → **track 5** of the sensor
computer connector B **track 17** → **track 6** of the sensor
computer connector B **track 19** → **track 10** of the sensor

or:

computer connector B **track 1** → **track 5** of the sensor
computer connector B **track 2** → **track 6** of the sensor
computer connector B **track 4** → **track 10** of the sensor

For the new redesign 2005 computer.
Repair if necessary.

If the fault is still present, **replace** the NO input toxicity sensor

GETtheMANUALS.org

PR019	PASSENGER COMPARTMENT FAN PWM SETTING

NOTES	The values listed below are examples only.

Controlled values with engine stopped and engine running (tolerance ± 15 %).

Blower speed	SPEED 0	SPEED 1	SPEED 2	SPEED 3	SPEED 4	SPEED 5	SPEED 6	SPEED 7	SPEED 8
Passenger compartment fan PWM setting	**0 %**	**10 %**	**20 %**	**30 %**	**43 %**	**55 %**	**69 %**	**82 %**	**100 %**
Fan unit speed	**4 %**	**15 %**	**27 %**	**38 %**	**52 %**	**68 %**	**82 %**	**95 %**	**95 %**

GETtheMANUALS.org

PR023	POSITION OF FOOTWELL/VENTILATION DISTRIBUTION FLAP.

NOTES	The values listed below are examples only (they depend on which way the flap is being moved).

Values checked with the engine stopped and engine running and climate control in manual mode (tolerance ± 15 %).

Position of flap controls		Position of de-icing distribution flap	Position of footwell ventilation flap
Demisting		**100 %**	**100 %**
Dashboard air vent		**6 %**	**6 %**
Footwell ventilation		**6 %**	**55 %**
Demisting + footwell ventilation		**100 %**	**55 %**
Footwell ventilation + dashboard air vent		**6 %**	**21 %**
Surround mode		**100 %**	**31 %**

GETtheMANUALS.org

LEFT-HAND MIXING MOTOR CONNECTOR (VIEW FROM REAR)

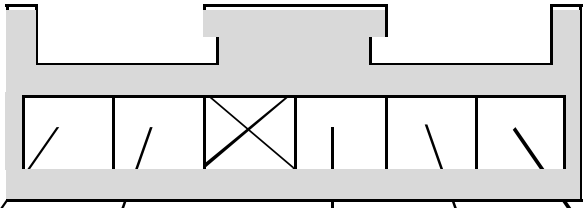

Control 1 of the left-hand mixing motor (computer connector **B track 22** or connector **B track 7** of the new redesign 2005 computer)

Potentiometer **5 V feed** (computer connector **B, track 14**).

Potentiometer earth (computer connector **B track 15** or connector **B track 5** of the new redesign 2005 computer).

Control 2 of the left-hand mixing motor (computer connector **B track 23** or connector **B track 8** of the new redesign 2005 computer)

Left-hand mixing flap position **feedback signal** (computer connector **B, track 4**).

RIGHT-HAND MIXING MOTOR CONNECTOR (VIEW FROM REAR)

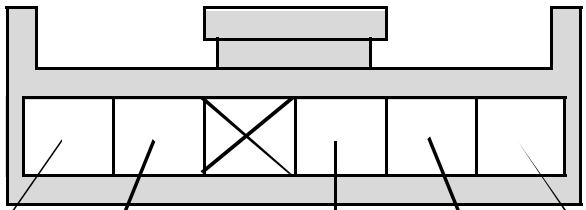

Control 1 of the right-hand mixing motor (computer connector **B track 26** or connector **B track 11** of new redesign 2005 computer)

Potentiometer **5 V feed** (computer connector **B, track 14**).

Potentiometer earth (computer connector **B track 15** or connector **B track 5** of the new redesign 2005 computer).

Control 2 of the right-hand mixing motor (computer connector **B track 27** or connector **B track 12** of the new redesign 2005 computer)

Right-hand mixing flap position **feedback signal** (computer connector **B, track 5**).

GETtheMANUALS.org

FAN POWER MODULE BLACK 4-TRACK CONNECTOR (VIEW FROM THE REAR)

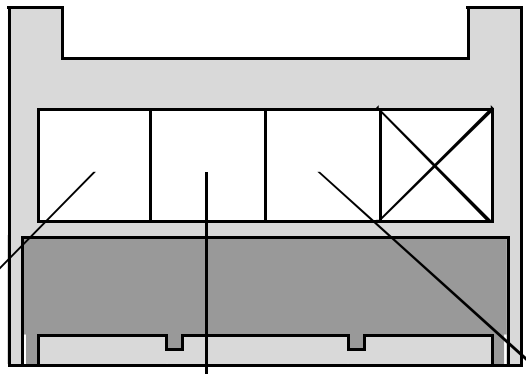

+ 12 V feed

Fan unit speed feedback signal (computer connector **A, track 13**)

Fan unit control (computer connector **A, track 27**)

TOXICITY SENSOR CONNECTOR (VIEW FROM REAR)

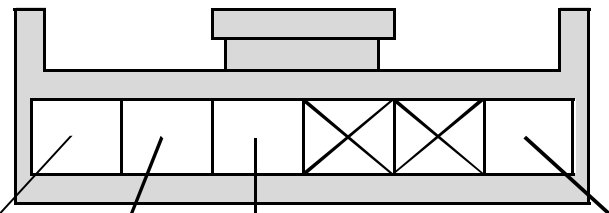

+ 5 V feed (computer connector **B track 16** or connector **B track 1** of the new redesign 2005 computer).

COX signal (computer connector **B track 18** or connector **B track 3** of the new redesign 2005 computer).

Earth (computer connector **B track 19** or connector **B track 4** of the new redesign 2005 computer)

NOx signal (computer connector **B track 17** or connector **B track 2** of the new design 2005 computer)

GETtheMANUALS.org

Passenger compartment fan unit sub-harness (beneath glove compartment)

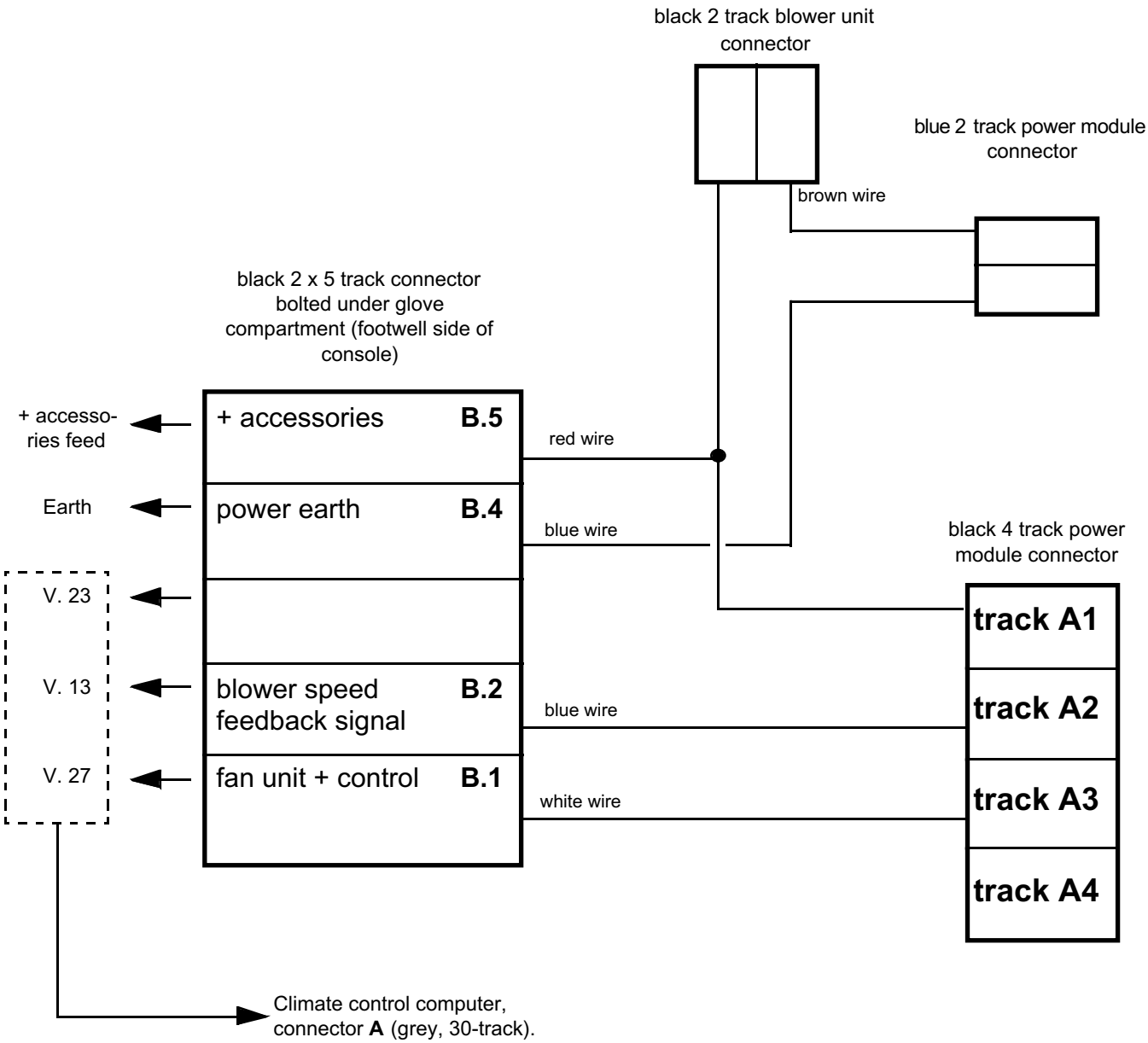

GETtheMANUALS.org

REPLACING THE CLIMATE CONTROL COMPUTER:

– Note the computer configuration according to the optional equipment fitted on the vehicle.

– Ensure that the ignition is switched off.

– Replace the computer (control panel).

– Switch on the ignition and carry out a check using the diagnostic tool.

– Configure the computer according to the optional equipment fitted on the vehicle (see Introduction).

– Go to the read configuration menu and confirm that the configurations have been stored.

– Check for faults and carry out fault finding procedures on any faults that have recurred.

– Clear any stored faults.

– Start the engine, switch on the air conditioning and ensure that it is working correctly.

COLOUR CODING OF COMPUTER CONNECTORS:
– The **grey 30 track** climate control computer connector is referred to in this note as: **connector A**.
– The **green 30 track** climate control computer connector is referred to in this note as: **connector B**.

– The green 15-track connector of the new 2005 redesign climate control computer is also connector B of the new redesign 2005 computer.

Method of recognising the 2005 redesign computer:
– From software 523C31 soft/calibration part no. **8 200 487 008**.
– Visually, you can recognise this computer by looking at the rear side of the control panel: there should be a green 15-track connector, not a 30-track connector.

GETtheMANUALS.org

MEASURING THE CONTROL VOLTAGE OF THE PASSENGER COMPARTMENT FAN UNIT POWER MODULE

There are two ways to measure the control voltage of the passenger compartment fan power module:

1 / Measuring with a multimeter (in voltmeter position):
With the power module connector connected, measure across **track 3** of the module and the earth.
At speed 0, the voltage measured should be approximately 6 V.
At maximum speed (8), the voltage should be zero (± 0.5 V).
The voltage varies between 0 and 6 V for the seven intermediate speeds.

Theoretical values:

speed **0**	6 V
speed **1**	5.1 V
speed **2**	4.75 V
speed **3**	4.3 V
speed **4**	3.9 V

speed **5**	3.5 V
speed **6**	3 V
speed **7**	2.6 V
speed **8**	0 V

2 / Measuring using an oscilloscope (Optima 5800, technical Clip or NXR):
The fan power module is controlled by pulse width modulated control voltage (PWM).
This control voltage is always **6 V**, whereas the control signal (square pulse signal) varies: the amplitude and frequency do not move but the **high status (6 V)** varies in relation to the **low status (0 V)**.
To measure, connect the oscilloscope earth lead to the battery earth and the oscilloscope measuring lead to **track 3** of the power module (module connector connected).
Adjust the time base on the oscilloscope to **2 ms** divisions with a gauge of **5 V** divisions.
The signals obtained should be: a high status of 6 V at 7.6 ms and a low status of 0 V at 0.4 ms for speed 0 and a straight line at 0 V for speed 8.
Example of measurements for the seven speeds in between (for information only):

Blower unit speed	Duration of high state	Duration of low state
speed **1**	7.2 ms	0.8 ms
speed **2**	6.4 ms	1.6 ms
speed **3**	6 ms	2 ms
speed **4**	5.4 ms	2.4 ms
speed **5**	4.8 ms	3.2 ms
speed **6**	4 ms	4 ms
speed **7**	3.6 ms	4.4 ms

GETtheMANUALS.org

NOTES	Only consult this customer complaint after a complete check with the diagnostic tool.

COMMUNICATION FAULT

- NO DIALOGUE WITH THE COMPUTER — ALP 0

AIR DISTRIBUTION FAULT

- AIR DISTRIBUTION FAULT — ALP 1
- FRONT AIR FLOW PROBLEM — ALP 2
- REAR AIR FLOW PROBLEM — ALP 3
- INEFFICIENT WINDSCREEN DEMISTING — ALP 4
- INEFFICIENT REAR SCREEN DE-ICING/DEMISTING — ALP 5
- INEFFICIENT VENTILATION — ALP 6
- NO FRONT PASSENGER COMPARTMENT VENTILATION — ALP 7
- NO REAR PASSENGER COMPARTMENT VENTILATION — ALP 8

HEATING FAULT

- NO HEATING OR INADEQUATE HEATING — ALP 9
- TOO MUCH HOT AIR — ALP 10
- NO COLD AIR — ALP 11
- TOO MUCH COLD AIR — ALP 12

ODOUR PROBLEM IN PASSENGER COMPARTMENT

- UNPLEASANT ODOURS IN PASSENGER COMPARTMENT — ALP 13

WATER IN PASSENGER COMPARTMENT

- WATER IS PRESENT IN PASSENGER COMPARTMENT — ALP 14

CONTROL PANEL FAULT

- NO FRONT CONTROL PANEL LIGHTING — ALP 15
- NO REAR CONTROL PANEL LIGHTING — ALP 16

COMPRESSOR NOISES

- NOISY COMPRESSOR — ALP 17

GETtheMANUALS.org

ALP 0	No dialogue with the computer

NOTES	**None.**

Try the diagnostic tool on another vehicle.

Check:
– The connection between the diagnostic tool and the diagnostic socket (lead in good condition).
– That the fuses are in good condition.

Check for a **+ 12 V battery feed** on **track 16**, and a **+ 12 V after ignition supply** on **track 1** and an **earth** on **track 5** and on **track 4** of the diagnostic socket.
Repair if necessary.

Disconnect **connector A** from the climate control computer to check the **conformity of the computer feeds** and the **insulation, continuity and absence of interference resistance** on the following connections:
Air conditioning connector A (grey, 30-track)

track 6 → **+ after ignition feed**
track 18 → **+ before ignition feed**
track 1 → **earth**
track 16 → **earth**
track 30 → **earth**
track 5 → **track 7** of the diagnostic socket (line K)

Repair if necessary (see the vehicle wiring diagram).

AFTER REPAIR	Check that the system is operating correctly.

GETtheMANUALS.org

ALP 1	Air distribution fault

NOTES	Only consult this customer complaint after a **complete check with the diagnostic tool**.
	Special notes: Adjusting the air distribution or ventilation controls switches off automatic air conditioning mode.

Make sure that **the air circuit** (**cabin filter**, scuttle panel grille, air ducts etc.) is not blocked.
Ensure that the blower blades are in good condition.
If necessary, repair, clean or replace the cabin filter.

Check that the blower unit **has no leaks**.
Repair if necessary.

↓

Switch the passenger compartment fan to full, the temperature control to maximum heat or maximum cold, and vary the air distribution.
Check that the air outlet is the one selected.

Is the **air distribution** correct?

YES → The air distribution is operating correctly. If necessary, explain how the system works to the customer again.

NO

↓

Using the diagnostic tool, check the air distribution control by checking the distribution motor parameters.
PR023 position of footwell/ventilation distribution flaps

Do the flaps open 100 %?

NO → Refer to the interpretation of parameter **PR023 Position of footwell/ventilation distribution flap**, and check how far the flap opens.
In the event of a fault, refer to the Technical Note for fault finding procedures for distribution motors.

YES

↓

(A)

AFTER REPAIR	Check that the system is operating correctly.

GETtheMANUALS.org

ALP 1 CONTINUED	

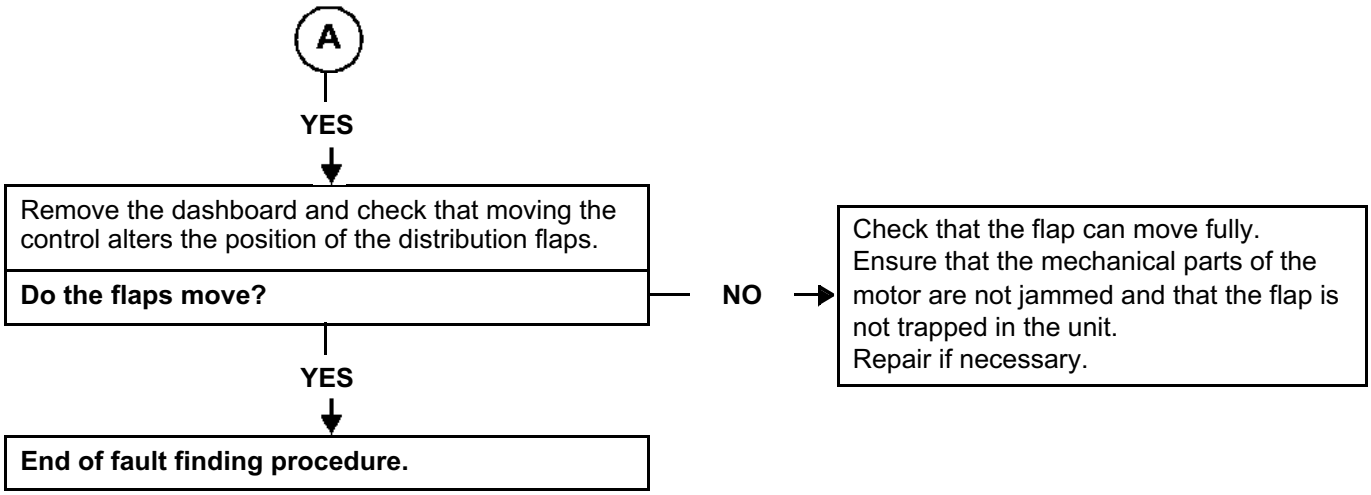

AFTER REPAIR	Check that the system is operating correctly.

GETtheMANUALS.org

ALP 2	Front air flow fault

NOTES	Only check the customer complaint after **a complete check with the diagnostic tool**. Check that the customer knows how to operate the air conditioning system properly.

Does the front passenger compartment fan **work**? — **NO** → Repair, see **ALP 7**.

YES

↓

Make sure that **the air circuit** (**cabin filter**, scuttle panel grille, air vents and extractors, etc.) is not blocked. Ensure that the blower blades are in good condition.
If necessary, repair, clean or replace the cabin filter.

↓

Ensure that the front fan unit is properly **airtight**.
Repair if necessary.

↓

Using the diagnostic tool, check that the recirculation flap is not closed in the recirculation position by checking status **ET021 Recirculation motor control**.
Repair if necessary.

↓

Does the fault disappear when the **air distribution** is changed? — **YES** → Ensure that all the air vents are open.
If the fault is still present, refer to **ALP 1**.

NO

↓

Run a **conformity check** as the problem may arise from a faulty signal from one of the sensors (temperature/ humidity, etc.).
Check that the interior air temperature sensor micro-turbine is in correct working order (if it is faulty it may falsify the measurement).
Replace any faulty components.

↓

(A)

AFTER REPAIR	Check that the system is operating correctly.

GETtheMANUALS.org

ALP 2

CONTINUED

(A)

Using the diagnostic tool, check that the fan speed corresponds to computer specifications (tolerance of ± 15 %) by checking parameters:
PR019 passenger compartment fan assembly PWM setpoint (modulated control voltage).
PR008 Fan unit speed
(fan unit speed return signal).
Refer to the Interpretation of parameters **PR019** and **PR008** table to ensure that the values obtained are consistent.

Does the speed comply with specifications?

YES → **End of fault finding procedure.**

NO

Check that the **PWM modulated control** (modulated control voltage) of the passenger compartment fan unit power module varies between 0 and 6 V (from 0 to 100 %) by measuring between track A3 of the module and earth (connector connected).
Note:
for a greater degree of precision, refer to the HELP section when taking the measurement.

Does the voltage vary correctly?

YES

Replace the power module.

NO

Check the **continuity and absence of interference resistance** of the following connection:
computer connector B **track 27** → **track A3** of the module
or
redesign 2005 computer connector B **track 12** → **track A3** of the module
Repair if necessary.

Is the fault still present?

NO

YES

Replace the control panel.

End of fault finding procedure.

AFTER REPAIR Check that the system is operating correctly.

GETtheMANUALS.org

ALP 3	Rear air flow problem

NOTES	Only check the customer complaint after **a complete check with the diagnostic tool**. Check that the customer knows how to operate the air conditioning system properly.

Does the rear passenger compartment fan **work**? — **NO** → Repair; refer to **ALP 8**.

YES ↓

Make sure that **the air circuit** (**cabin filter**, scuttle panel grille, air vents and extractors etc.) is not blocked.
Ensure that the blower blades are in good condition.
If necessary, repair, clean or replace the cabin filter.

↓

Ensure that the rear fan unit is properly **airtight**.
Repair if necessary.

↓

Check the resistance of the rear blower: **0.95 Ω**.
Replace the rear blower if necessary.

↓

Does the fault disappear when the **air distribution** is changed? — **YES** → Ensure that all the air vents are open.
If the fault is still present, refer to **ALP 1**.

NO ↓

Using the diagnostic tool, check that the fan speed corresponds to the computer signal (tolerance of ± 5 %) by checking parameters:
PR024 Rear fan speed (fan speed feedback signal).
Consult the interpretation of parameter **PR024**, to make sure that the values obtained are consistent.

Does the speed comply with specifications? — **YES** → **End of fault finding procedure.**

NO ↓

(A)

AFTER REPAIR	Check that the system is operating correctly.

GETtheMANUALS.org

ALP 3

CONTINUED

(A)

Check the resistances of the rear fan resistor unit.
Replace the resistor unit if the resistances are not as follows (**± 0.5 Ω**):
- V1: **5.0 Ω** (tracks C and B)
- V2: **2.4 Ω** (tracks A and B)
- V3: **0.8 Ω** (tracks D and B)

Are the resistances correct?

NO → **Replace** the resistor unit.

YES

Check the continuity and absence of interference resistance on the following connections:
- Rear control unit **Track B3** → **Track D** of the resistor unit
- Rear control unit **Track B2** → **Track A** of the control unit
- Rear control unit **Track A1** → **Track C** of the resistor unit

Is the fault still present?

NO

YES

Using an ohmmeter, check that the rear fan control unit is operating correctly.
Replace the unit if necessary.

End of fault finding procedure.

AFTER REPAIR	Check that the system is operating correctly.

GETtheMANUALS.org

ALP 4	Inefficient windscreen demisting

NOTES	Only check the customer complaint after **a complete check with the diagnostic tool**.
	Special notes: Check that the inside of the windows are not dirty, as this reduces the efficiency of the demister.

If the vehicle is fitted with a heated windscreen, use the diagnostic tool to check that the **computer is configured correctly** by reading configuration: **LC005 Heated windscreen**. Reconfigure the computer if necessary and check that the heated windscreen is working correctly (see Introduction).

↓

Check that the air extraction vents are not blocked.
Repair if necessary.

Is the fault still present?

NO → **End of fault finding procedure.**

YES

↓

Ensure that there are no **water leaks** in the passenger compartment which would significantly increase the moisture and reduce the effectiveness of the demisting function.
Repair if necessary (see **ALP 14**).

Is the fault still present?

NO → **End of fault finding procedure.**

YES

↓

Check that the compressor is in **correct working order** by using command: **AC021 Compressor clutch** or by switching on the climate control.
Repair if necessary.

↓

(A)

AFTER REPAIR	Check that the system is operating correctly.

GETtheMANUALS.org

ALP 4

CONTINUED

(A)

Check that the condensation outlet (water from the evaporator) is not blocked.
Repair if necessary

Is it an **air distribution** fault? — **YES** → See **ALP 1**.

NO

Is it an **air flow** fault? — **YES** → See **ALP 2**

NO

Is it a **heater performance** fault? — **YES** → See **ALP 9**

NO

Using the diagnostic tool, check that the recirculation flap is in the **external air** position by checking status **ET021 Recirculation motor command**.
Repair if necessary.

Is the fault still present?

YES

Run a **conformity check** as the fault may arise from a faulty signal from one of the sensors (temperature/humidity, etc.).
Check that the interior air temperature sensor micro-turbine is in correct working order (if it is faulty it may falsify the measurement).
Replace any faulty components.

NO

End of fault finding procedure.

AFTER REPAIR	Check that the system is operating correctly.

GETtheMANUALS.org

ALP 5	Inefficient rear screen de-icing/demisting

NOTES	Only consult this customer complaint after a **complete check with the diagnostic tool**.
	Special notes: – Check that the inside of the windows are not **dirty** as this reduces the efficiency of the de-icing function. – **The de-icing control is only authorised when the engine is running to save power.** **Rear screen de-icing can be activated in two ways:** – Pressing the lower part of the de-icing switch on the control panel activates the heated rear screen and the door mirrors. – Pressing the upper part of the heating switch on the control panel operates the See clear function (heated rear screen and door mirrors, ventilated windscreen and electrically heated windscreen, if fitted to the vehicle). Note: **In both instances de-icing activation is only authorised with the engine running.**

Ensure that there are no water leaks in the passenger compartment which would significantly increase the moisture and reduce the effectiveness of the demisting function.
Repair if necessary (see **ALP 14**).

Is the fault still present?

NO → **End of fault finding procedure.**

YES

↓

Use the diagnostic tool to check the heated rear screen relay control, by checking status **ET022 Heated rear screen control**.
Repair if necessary (see **ET022**).

↓

(A)

AFTER REPAIR	Check that the system is operating correctly.

GETtheMANUALS.org

ALP 5 CONTINUED	

(A)

Remove the plastic pillars from the rear screen and check that **the heating wires have not been cut** by measuring their resistance (**0.5 to 1Ω**).
Repair if necessary.

Check for an **earth** on the terminal located on the right-hand side of the heated rear screen and **+ 12 V** (when the de-icing is switched on) on the left-hand side terminal.
If there is no supply to the screen, check **the continuity and absence of interference resistance** of the connection between:

Rear screen relay **track 5** → heated rear screen left-hand terminal connector

Repair if necessary.
If the fault is still present, **apply the fault finding procedure** for fault **ET022 Heated rear screen control**.

Is the fault still present?

YES

Carry out a **conformity check** as the fault may result from an incorrect signal from the external temperature sensor.
Check that the interior air temperature sensor micro-turbine is in correct working order (if it is faulty it may falsify the measurement).
Replace any faulty components.

NO

End of fault finding procedure.

AFTER REPAIR	Check that the system is operating correctly.

GETtheMANUALS.org

ALP 6	Inefficient ventilation

NOTES	Only check the customer complaint after **a complete check with the diagnostic tool**.

Is the **air flow** correct?
— **NO** → See **ALP 2** and **ALP 3**.

YES ↓

Is the **air distribution** correct?
— **NO** → See **ALP 1**.

YES ↓

End of fault finding procedure.

AFTER REPAIR	Check that the system is operating correctly.

GETtheMANUALS.org

ALP 7	No front passenger compartment fan

NOTES	Only consult this customer complaint after **a complete check with the diagnostic tool**.

Check that the **fuses** are in good condition.

↓

Using the diagnostic tool, check that the fan unit control setpoint given by the computer varies from 0 to 100 % by checking parameter **PR019 Passenger compartment fan PWM setpoint**.

Does the value vary? — **NO** → Replace the control panel.

YES

↓

Check that the **PWM modulated control** (modulated control voltage) of the passenger compartment fan unit power module varies between 0 and 6 V (from 0 to 100 %) by measuring between track A3 of the module and earth (connector connected).
Note:
For a greater degree of accuracy, refer to the HELP section when taking the measurement.

Does the voltage vary correctly? — **YES** → (A)

NO

↓

Connect the bornier in place of the computer and check the **insulation, continuity and absence of interference resistance** of the following connections:

computer connector A **track 27** → **track A3** of the front fan unit power module
computer connector A **track 13** → **track A2** of the front fan unit power module

Repair if necessary.

↓

With the ignition on, check for **+ 12 V** on track **B5** and **earth** on track **B4** of the black 2 x 5 track connector of the blower unit (screwed under the glove compartment on the console base side).
Repair if necessary.

↓

(A)

AFTER REPAIR	Check that the system is operating correctly.

GETtheMANUALS.org

ALP 7 CONTINUED	

(A)

Check the **insulation, continuity and interference resistance** on the following connections:

black 2 x 5-track connector	**black 4-track connector of the power module**
track B1	**track A3**
track B2	**track A2**
track B3	**track A4**
track B5	**track A1**
track B4	**black 2-track fan connector**
	track A
	track B
	blue 2-track connector of the power module
	track A
	track B

Repair if necessary.

Check that the passenger compartment fan blades have not **broken or come away** from their shaft. Ensure that there are no foreign bodies blocking the fan.
Repair or replace the passenger compartment fan if necessary.

Disconnect the fan unit black 2-track connector and **check the resistance of the motor** across tracks A and B. Replace the fan unit if there is zero or infinite resistance.

Is the fault still present?

NO → End of fault finding procedure.

YES

Replace the power module.

AFTER REPAIR	Check that the system is operating correctly.

GETtheMANUALS.org

ALP 8	No rear passenger compartment fan

NOTES	Only check the customer complaint after **a complete check with the diagnostic tool**.

Check that the **fuses** are in good condition.

With the ignition on, check for 12 V feed on **track B1** of the rear fan control unit.

Is there a feed? — **YES**

NO

Check the **insulation, continuity and absence of interference resistance** on the following connection:

Rear control unit — **Track B1** → **Rear fan unit relay** — **Track A5**

Repair if necessary.

With the ignition on, check for + 12 volts feed on **track A1** and **A3** of the rear fan unit relay and an earth on **track A2**.
Repair if necessary (see wiring diagram).

Check that the rear fan unit relay is in correct working order.
Replace the relay if necessary.

Using an ohmmeter, check that the rear fan control unit is operating correctly:
Speed 1: Continuity between **track B1** and **track A1**.
Speed 2: Continuity between **track B1** and **track B2**.
Speed 3: Continuity between **track B1** and **track B3**.
Replace the rear fan unit control unit if necessary.

(A)

AFTER REPAIR	Check that the system is operating correctly.

GETtheMANUALS.org

ALP 8 CONTINUED 1	

(A)

Check the **insulation, continuity and absence of interference resistance** of the following connections:

Rear control unit **Track D** → **Track B3** of the resistor unit
Rear control unit **Track A** → **Track B2** of the resistor unit
Rear control unit **Track C** → **Track A1** of the resistor unit

Repair if necessary.

Check the resistances of the rear fan resistor unit (**± 0.5 Ω**):

– V1: **5.0 Ω** (tracks C and B) – V2: **2.4 Ω** (tracks A and B) – V3: **0.8 Ω** (tracks D and B)

Replace the resistor unit if the values measured do not correspond to those given above.

Check the consistency of the rear fan unit control voltages according to the 3 control speeds: Measure between **track 2** of the black 6-track intermediary connector and **earth** (refer to the HELP section for information on taking the measurement).

Are the voltages correct?

YES → (B)

NO

Check the **insulation, continuity and absence of interference resistance** on the following connection:

Resistor unit	Black 6-track intermediary connector	Climate control computer connector A (grey, 30-track)
	Track 2 →	Track 20
Track B →		

Repair if necessary.
If the connection is correct (or after adjusting it), disconnect the connector from **track A** of the fan unit and repeat the previous test.

Are the voltages correct?

NO → **Replace** the resistor unit.

YES → (B)

AFTER REPAIR	Check that the system is operating correctly.

GETtheMANUALS.org

ALP 8 CONTINUED 2	

B

Check for an **earth** on **track 3** of the black 6-track intermediary connector.
Repair if necessary.

Check the **insulation, continuity and absence of interference resistance** of the following connection:
Black 6-track intermediary connector

Track 3 → **Track 2** of the rear fan unit relay
→ **Track A2** of the rear control panel
→ **Track B** of the rear fan unit

Repair if necessary.

Check that the rear fan unit blades have not **broken or come away** from their shaft.
Ensure that there are no foreign bodies blocking the fan.
Repair or replace the passenger compartment fan if necessary.

Disconnect the black 2-track connector from the rear fan and **check the resistance of the motor** across **tracks A** and **B**.
Replace the fan if the resistance is zero or infinite.

End of fault finding procedure.

AFTER REPAIR	Check that the system is operating correctly.

GETtheMANUALS.org

ALP 9	No heating or inadequate heating

NOTES	Only check the customer complaint after **a complete check with the diagnostic tool**.

Is the **air flow** correct?
- **NO** → See **ALP 2**, air flow fault.
- **YES** ↓

Is the **air distribution** correct?
- **NO** → See **ALP 1**, air distribution fault.
- **YES** ↓

With a warm engine, set the heating to max.
Is the air supplied hot?
- **YES** → If necessary, explain how the system works to the customer again.
- **NO** ↓

Using the diagnostic tool, check the air mixing control by checking the mixing motor parameters.
PR020 Left-hand mixing flap position
PR021 Right-hand mixing flap position

Do the flaps open fully? (maximum heat position: 100 % displayed on tool)
- **NO** → Run **a conformity check** on the mixing motors.
  In the event of a fault, refer to the mixing motor diagnostic procedures in the Technical Note (**DF018** and **DF019**).

  Is the fault still present?
  - **YES** → Run a **conformity check** on the sensors as the problem may arise from a faulty signal from one of the sensors (temperature/humidity, etc.). Check that the interior air temperature sensor micro-turbine is in correct working order (if it is faulty it may falsify the measurement). Replace any faulty components.
  - **NO** → **End of fault finding procedure.**
- **YES** ↓

Run a **conformity check** on the sensors as the problem may arise from a faulty signal from one of the sensors (temperature/humidity, etc.). Check that the interior air temperature sensor micro-turbine is in correct working order (if it is faulty it may falsify the measurement). Replace any faulty components.

↓ (A)

AFTER REPAIR	Check that the system is operating correctly.

GETtheMANUALS.org

ALP 9 CONTINUED	

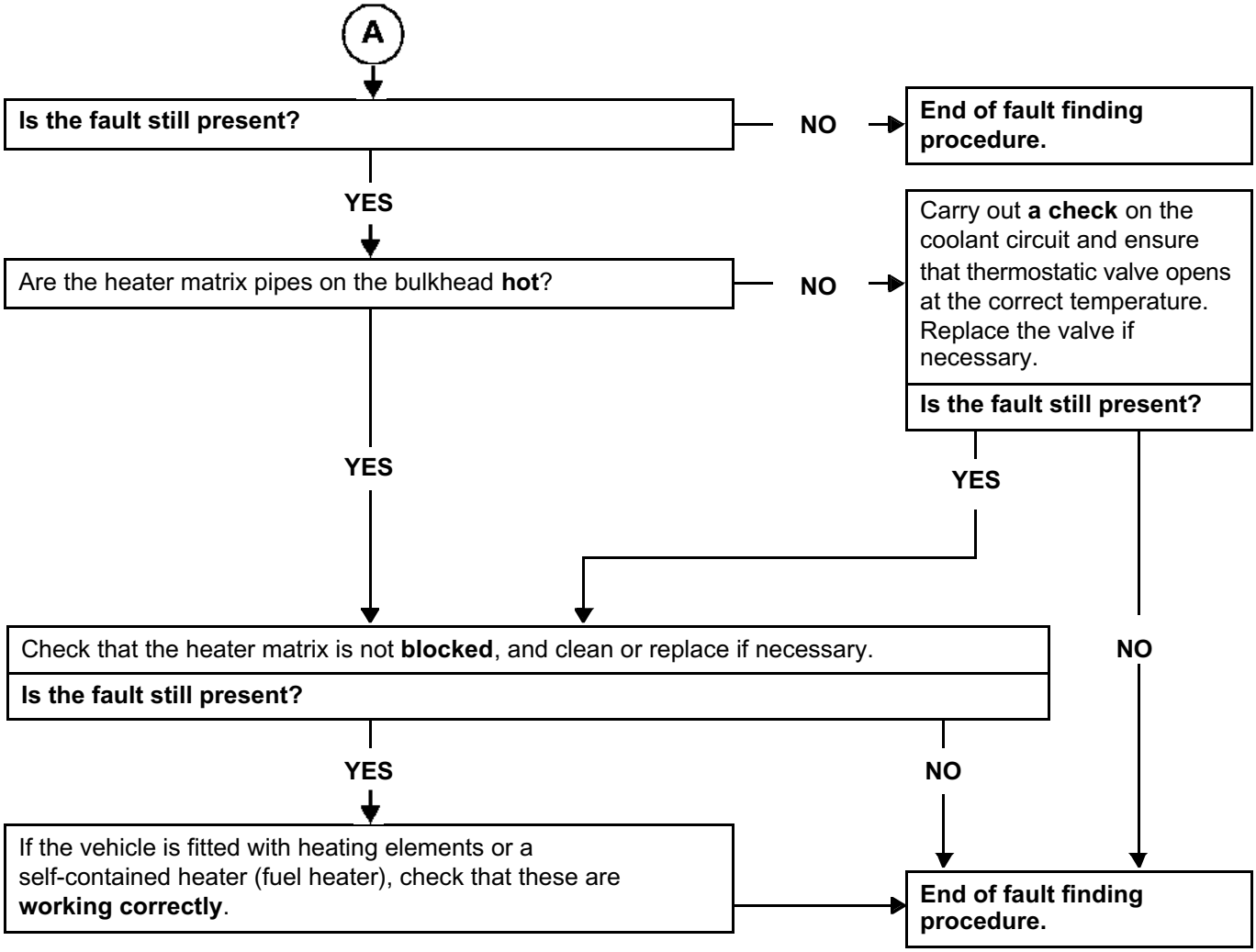

AFTER REPAIR	Check that the system is operating correctly.

GETtheMANUALS.org

ALP 10	Too much hot air

NOTES	Only check the customer complaint after **a complete check with the diagnostic tool**.

Is the **air flow** correct?

- NO → See **ALP 2**, Air flow problem
- YES ↓

Is the **air distribution** correct?

- NO → See **ALP 1**, air distribution fault.
- YES ↓

Using the diagnostic tool, check the air mixing control by checking the mixing motor parameters.

PR020 → **Position of left-hand mixing flap**
PR021 → **Position of right-hand mixing flap**

Do the flaps open fully? (maximum heat position: 100 % displayed on tool)

- NO → Run **a conformity check** on the mixing motors. In the event of a fault, refer to the mixing motor diagnostic procedures in the Technical Note (**DF018** and **DF019**).

Is the fault still present?

- YES → Run a **conformity check** on the sensors as the problem may arise from a faulty signal from one of the sensors (temperature/humidity, etc.). Check that the interior air temperature sensor micro-turbine is in correct working order (if it is faulty it may falsify the measurement). Replace any faulty components.
- NO → **End of fault finding procedure.**

YES ↓

A

AFTER REPAIR	Check that the system is operating correctly.

GETtheMANUALS.org

ALP 10 CONTINUED	

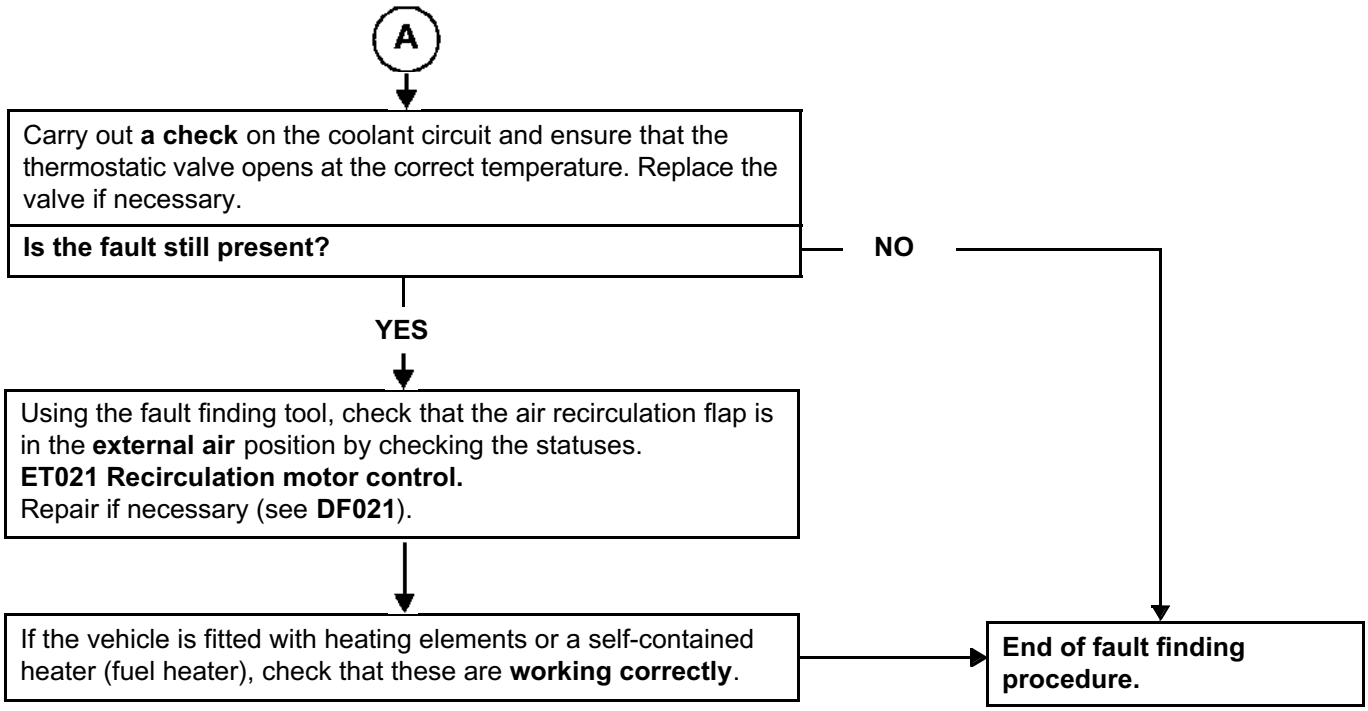

AFTER REPAIR	Check that the system is operating correctly.

GETtheMANUALS.org

ALP 11	No cold air

NOTES	Only refer to this customer complaint after a **complete check using the diagnostic tool**

Start the engine, switch on the climate control (compressor engaged by pressing and holding AC button) with a very cold temperature request (minimum position on the left and right). Using the fault finding tool, display status **ET140 Air conditioning request**; this status should display **YES**.

Is the status YES?

NO → Carry out **a conformity check**, referring mainly to the sensor temperature values (evaporator temperature, interior air temperature, the refrigerant fluid pressure, etc.)

YES ↓

Using the diagnostic tool and with the engine at idle speed, check that the injection computer authorises air conditioning.
The status **ET003 AC inhibited by the injection computer** should display **NO**.

Is the correct status displayed?

NO → Carry out **fault finding on the injection** (faulty injection leading to a substandard performance may prevent the climate control from functioning). Ensure that the fan unit motor is in correct working order. Repair if necessary.

YES ↓

Check the condition of the **climate control compressor belt**.
Replace it if necessary and check the **tension**.

Is the tension correct?

NO → **Replace** the belt (refer to the repair procedures).

YES ↓

(A)

AFTER REPAIR	Check that the system is operating correctly.

GETtheMANUALS.org

ALP 11 CONTINUED 1	

(A)

Using the diagnostic tool, select command **AC021 Compressor clutch**.

Does the compressor clutch stick? — **YES** →

NO ↓

Check for **+ 12 V** on **track B** (**track 2** on the V4Y engine) of the compressor clutch and on **track B** of the variable capacity control solenoid valve (not the electric control solenoid valve on the V4Y and P9X engines).
Repair if necessary.

↓

Connect the bornier in place of the computer and check the **insulation, continuity and the absence of interference resistance** on the following connections:

computer connector A **track 15** → **track A** of the compressor clutch
computer connector A **track 7** → **track A** of the variable capacity control solenoid valve.

Repair if necessary

↓

Vary the position of the left-hand and right-hand mixing flaps from very cold to very hot (from minimum temperature position to maximum temperature position) and check subjectively whether there is a difference in temperature.

Can you feel the difference in temperature? — **NO** → Run **a conformity check** on the mixing motors. In the event of a fault, refer to the mixing motor diagnostic procedures in the Technical Note (**DF018** and **DF019**).

YES ↓

(B)

AFTER REPAIR	Check that the system is operating correctly.

GETtheMANUALS.org

ALP 11

CONTINUED 2

B

Check the cold loop by examining the condition of the pipes and ensuring that the climate control system is not **leaking refrigerant** (carry out the check with the engine cold and then hot, using the electronic buzzer or a leak detecting product to avoid charging the climate control system twice in succession).
Repair if necessary.

Check that the condenser is clean (no leaves, mud, etc.).
Clean the condenser if necessary.

With the climate control switched on (on a very cold setting), touch the refrigerant pipe between the calibrated choke and the evaporator to make sure that it is **very cold**.

Is the refrigerant pipe cold?

NO → Check that there is a **calibrated jet**.

Is the calibrated jet present?

YES → **Replace the calibrated choke**

NO → **Replace the pipe** (between the condenser outlet and the evaporator inlet).

YES →

Top up the refrigerant, referring to the Workshop Repair Manual (650 g ± 25 g).

Is the fault still present?

YES → Replace the compressor

NO → **End of fault finding procedure.**

AFTER REPAIR	Check that the system is operating correctly.

GETtheMANUALS.org

ALP 12	Too much cold air

NOTES	Only consult this customer complaint after a **complete check with the diagnostic tool**.

Start the engine and switch on the climate control system (engage the compressor by pressing the AC button):
Does the compressor operate?

YES

NO

Use the diagnostic tool to display the evaporator temperature (**PR003**), with the climate control operational. Does the temperature drop below 0 ˚C (the point at which the compressor clutch is disengaged)?

YES

Does the compressor clutch disengage when the temperature is below 0 ˚C? (1 minute delay).

YES

NO

If the compressor is not faulty and there are no mechanical faults on the compressor clutch, replace the climate control computer.

NO

Ensure that **the evaporator temperature sensor** is in the correct position (it is inserted approximately 20 mm into the evaporator air outlet).

Check **the resistance** of the evaporator sensor between **track 1** and **track 2** of the sensor.
Replace the sensor if the resistance is not approximately:
30 KΩ at 25 ˚C.

Is the fault still present?

NO

End of fault finding procedure.

A

AFTER REPAIR	Check that the system is operating correctly.

GETtheMANUALS.org

ALP 12 CONTINUED	

(A)

Run a **conformity check** on the sensors as the problem may arise from a faulty signal from one of the sensors (interior temperature, external temperature, engine coolant temperature, evaporator temperature, etc.). Check that the interior air temperature sensor micro-turbine is in correct working order (if it is faulty it may falsify the measurement).
Replace any faulty components.

↓

Using the fault finding tool, examine the air mixer control by checking the mixing motor parameters.
PR020 Left-hand mixing flap position
PR021 Right-hand mixing flap position

Is the mixing correct?
(0 % maximum cold, 100 % maximum heat)

NO → Run **a conformity check** on the mixing motors.
In the event of a fault, refer to the mixing motor diagnostic procedures in the Technical Note (**DF018** and **DF019**).

YES

↓

Check the refrigerant level.

AFTER REPAIR	Check that the system is operating correctly.

GETtheMANUALS.org

ALP 13	Unpleasant odours in the passenger compartment

NOTES	Only check the customer complaint after a complete check with the diagnostic tool.

Check that the cabin filter is not blocked or damaged.
Replace it if necessary.

Is the fault still present?

NO → **End of fault finding procedure.**

YES ↓

Check that the condensate **drain pipe** (water from the evaporator) is not blocked.
Repair if necessary.

Is the fault still present?

NO → **End of fault finding procedure.**

YES ↓

Check that **the heating unit is completely sealed and there are no leaks** into the engine compartment.
Repair if necessary.

Is the fault still present?

NO → **End of fault finding procedure.**

YES ↓

Place the vehicle on a lift.
Apply the climate control cleaning product using the extension piece through the condensation (evaporator water evacuation pipe) outlet pipe.
Spray the entire contents of the aerosol.
Leave the product to work for **15 minutes**.

AFTER REPAIR	Check that the system is operating correctly.

GETtheMANUALS.org

ALP 14	Water is present in the passenger compartment

NOTES	Only refer to this customer complaint section after a complete check using the diagnostic tool.

Pressurize the cooling circuit.

Is there any coolant leaking into the vehicle? — **YES** → **Repair.**

NO ↓

Check that the condensation **evacuation pipe** (water from the evaporator) is not blocked.
Repair if necessary.

Is the fault still present? — **NO** → **End of fault finding procedure.**

YES ↓

The fault may be caused by **ice** in the evaporator.
Does the customer complain of water droplets coming out of the air vents? — **NO** → The leak is not coming from the air conditioning system.

YES ↓

Use the diagnostic tool to display the evaporator temperature (**PR003**). Does it seem consistent? (in normal operation, temperature should be > **0 °C**, and the compressor should disengage for one minute when it falls below this value). — **YES** → Run a **conformity check** as the fault may arise from a faulty signal from one of the sensors (temperature/ humidity, etc.).
Replace any faulty components.

NO ↓

Ensure that **the evaporator temperature sensor** is in the correct position (it is inserted approximately 20 mm into the evaporator air output).

→ **End of fault finding procedure.**

AFTER REPAIR	Check that the system is operating correctly.

GETtheMANUALS.org

ALP 15	No front control panel lighting

NOTES	Only follow up this customer complaint after a full check of the multiplex network and the air conditioning with the diagnostic tool.
	Special notes: The control panel is permanently lit but the buttons only light up when the side lights are switched on.
	Note: A delay in the climate control panel lighting could be due to an external temperature sensor malfunction.

Check the **connection and condition** of the computer output connectors.
Connect the bornier in place of the computer and check **the insulation, continuity and absence of interference resistance** of the following connections:

computer connector A **track 14** → **track 2** of the lighting dimmer

earth → **track 3** of the dimmer

Repair if necessary.

Is the fault still present?

NO → **End of fault finding procedure.**

YES

Check the **resistance** value of the dimmer by measuring across: **track 2** and **track 3** of the dimmer connector.
When the dimmer is operated, its resistance should vary between **0 and 1000 Ω** ± 5 %.
Replace the lighting dimmer if this is not the case.

Is the fault still present?

NO → **End of fault finding procedure.**

YES

(A)

AFTER REPAIR	Check that the system is operating correctly.

GETtheMANUALS.org

ALP 15 CONTINUED	

(A)

Connect the bornier in place of the computer and check the **insulation, continuity and absence of interference resistance** of the connection:

computer connector A **track 2** → **+ side lights feed (see diagram for the vehicle and model year concerned)**

Repair if necessary.

Is the fault still present?

YES

Check the passenger compartment connection unit with the diagnostic tool.
Check that the side light command status changes to active when the lights switch on.
If this does not occur, refer to the **UCH fault finding** procedure, or run **fault finding on the multiplex network**.

Is the fault still present?

NO → **End of fault finding procedure.**

YES

Replace the computer (control panel).

NO

AFTER REPAIR	Check that the system is operating correctly.

GETtheMANUALS.org

ALP 16	No rear control panel lighting

NOTES	**Special notes:** The control panel only lights up when the side lights are switched on.

Check the condition of the fuses.
Repair if necessary.

↓

Check the condition of the bulb.
Repair if necessary.

↓

Check the **connection and condition** of the rear fan control unit connector. Check the **insulation, continuity and absence of interference resistance** of the following connections:

track A3 of the control unit → **UCH** (see diagram)
track A2 of the control unit → **earth**

Repair if necessary.

↓

Check for 12 V feed on **track A3** of the rear fan control unit.

Is there a 12 V supply? — **YES** → **End of fault finding procedure.**

NO

↓

Carry out fault finding on the UCH.

AFTER REPAIR	Check that the system is operating correctly.

GETtheMANUALS.org

ALP 17	Noisy compressor

NOTES	Only consult this customer complaint after a complete check with the diagnostic tool.

Using the screen for reading configurations on the diagnostic tool, check that **the drive ratio and compressor type match the vehicle equipment** by displaying the following information:
The **LC036 Read drive ratio** information should indicate the type of engine fitted to the vehicle (the engine is associated with a drive ratio).
The information **LC012 Compressor type** information should indicate the type of compressor fitted to the vehicle.
Reconfigure the climate control computer if necessary.

↓

Check that the compressor **belt is in good condition** and **check its tension** (for engines without automatic tensioner).
Replace the belt if necessary.

↓

Check that the compressor is **correctly mounted**.
Repair if necessary.

↓

Check **the refrigerant level** and look for leaks as the compressor may become noisy if a significant volume of fluid is lost.
Refill if necessary.

↓

For compressors fitted with an electric compressor capacity control valve (except V4Y and P9X engines), connect the bornier in place of the computer and check the **insulation, continuity and absence of interference resistance** of the following connection:
computer connector A **track 7** ⟶ **track A** of the variable capacity control solenoid valve.
Repair if necessary.

↓

If the fault is still present, **replace** the air conditioning compressor.

AFTER REPAIR	Check that the system is operating correctly.

GETtheMANUALS.org

VEL SATIS

8 Electrical equipment

80A BATTERY

Battery – Initialisation	80A - 2
Battery – Specifications	80A - 3
Battery – Advice	80A - 4
Battery – Check	80A - 5
Battery – Test	80A - 7

V3 **Edition Anglaise**

"The repair procedures given by the manufacturer in this document are based on the technical specifications current when it was prepared.

The procedures may be modified as a result of changes introduced by the manufacturer in the production of the various component units and accessories from which his vehicles are constructed."

All rights reserved by Renault s.a.s.

Copying or translating, in part or in full, of this document or use of the service part reference numbering system is forbidden without the prior written authority of Renault s.a.s.

© Renault s.a.s. 2008

GETtheMANUALS.org

When removing or disconnecting the battery, check that the battery is working correctly by performing a number of initialisations on different vehicle functions.
These initialisations do not require a tool of any kind.

Anti-theft code:
– Entering a 4-digit radio or radio navigation code (see **86A, Radio, Radio: Anti-theft code**).
– Setting the time on the radio or the radio navigation system:
To set the radio navigation system time, enter the four digit code. Insert the navigation CD-ROM then drive the vehicle to pick up the satellite signals. It is now possible to set the time (see **86A, Radio, Radio: Setting the time**).

Initialisation of the window winders:
– Check that the electric windows are still initialised. The windows should open and close when the switch is pressed. If this does not happen, re-initialise (see **87D, Electric windows - sunroof, Electric windows: Initialisation**).

Initialising the sunroof:
– Check that the sunroof is still initialised. The sunroof should open or close to the requested position without stopping. If this does not happen, re-initialise (see **87D, Electric windows - Sunroof, Electric sunroof: Initialisation**).

Initialising the computers:
-The other computers are automatically initialised when the vehicle is being driven. Drive the vehicle for at least **1 minute** at a speed greater than **18 mph (30 km/h)** so that the tyre pressures are displayed again.

GETtheMANUALS.org

Battery specifications:
Always replace a battery with one that has the same electrical and dimensional specifications.

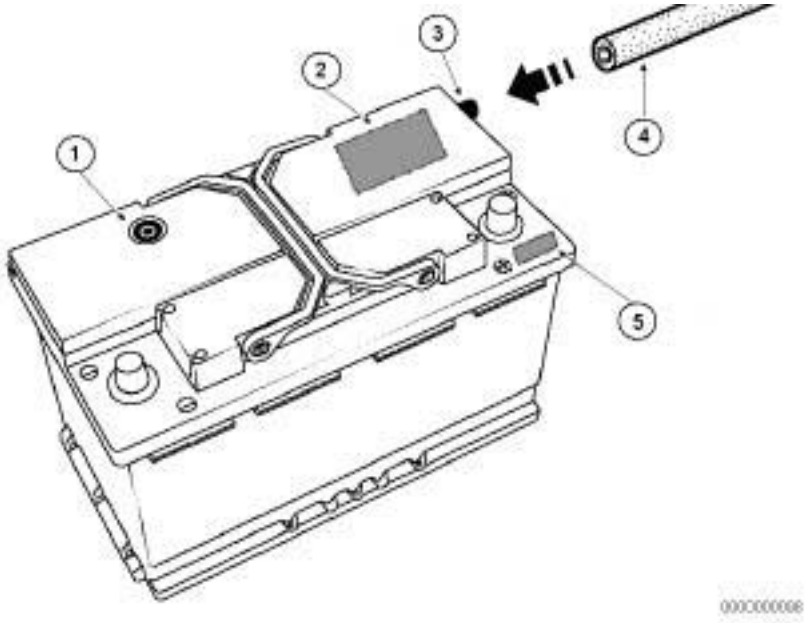

1	Hydrometer (magic eye)
2	Battery label example: L5 12V 95AH Test 850A EN 82 00 000 000
	L5: dimensions Letter L = height 190 mm Letters LB = height 175 mm Figure 5 = length 352 mm (if 4 = 314 mm, etc.) The width is always 175 mm 12V: nominal voltage 95Ah: nominal capacity 850A: starting current EN: complies with European standards 82 00 000 000: part number (maybe 24 41 000 01R new number system)
3	Degassing vent
4	Degassing pipe
5	Date of manufacture format: DD/MM/YYYY

Visual inspection of the battery
Make sure there are no cracks or breakages, traces of acid, or creepage (sulphation) on the terminals. If any of the above are present, replace the battery and clean the surrounding area.
Check that the degassing pipe is properly connected to the battery vent

Check that the degassing pipe (4) is correctly positioned.

GETtheMANUALS.org

IMPORTANT
- All vehicles are equipped with low water consumption batteries. Opening the battery and topping up the electrolyte level are PROHIBITED.
- Batteries contain sulphuric acid, which is a hazardous chemical.
- Battery charging produces hydrogen and oxygen, which are very flammable gases and thus there is a risk of explosion.
- Any batteries with filling plugs must not be opened under any circumstances but replaced immediately with Renault approved batteries.

Battery recharging:

When parked, vehicles consume power through their permanent consumers and through any accessories fitted as After-Sales options. To keep battery discharging to a minimum, limit the number of times the vehicle is started, periods with the ignition on, doors open, etc., as much as possible.
A discharged battery must be recharged using a Renault-approved battery charger (see **Technical Note 6512A, Battery charging**)

IMPORTANT
- Simultaneous recharging of several batteries in series or in parallel is forbidden.
- A battery charger used on a battery connected to a vehicle can irreparably damage the vehicle computers due to the high voltages created when charging.
- The location of the charger must take this into account (ventilation).
- A battery charger or a booster not approved by Renault can damage the electrical components.

Battery storage:

Even when stored off the vehicle, a battery gradually discharges, and more rapidly if the ambient temperature is high.
In order that a battery remains operational for a long time, it must be stored at a temperature of around **15 ˚C** and protected from humidity. To retain a good level of charge, it is recommended that a battery is completely recharged after it has been stored for 3 months.
A new battery that has been stored for more than one year must not be fitted to a vehicle.

GETtheMANUALS.org

Test procedure using the MIDTRONICS tool

Special tooling required	
Elé. 1593	Battery tester MIDTRONICS R330

Test conditions

The measurement must be taken when the vehicle is stationary and the ignition is off.

If the engine has been run in the last hour, switch the battery status to test and carry out the following operations:
– engine switched off,
– switch on the main beam headlights for **2 minutes**,
– switch off the main beam headlights,
– wait for **2 minutes**,
– switch off the ignition.

Equipment to be used:
– Tester approved by the Service Department: MIDTRONICS MICRO R330.
– Tool available as part no.: Elé. 1593.
– Equipment available in France from the Parts Department.
– Tool available in 6 languages.
– For other countries, consult your contact in your country.

WARNING
Failure to observe the procedure or poorly maintained equipment may result in incorrect measurements, which could be:
– detrimental to the customer (the battery is not sound),
– detrimental to RENAULT (unnecessary replacement of a sound or rechargeable battery),
– detrimental to the dealership (if the battery is tested as sound or rechargeable for a part return under warranty, the warranty reimbursement request will be cancelled).

GETtheMANUALS.org

Mode (test on vehicle)

– Connect the tool directly to the battery terminals, without disconnecting the vehicle battery, as close as possible to the battery terminal but ensuring it is not after the fuse (on-vehicle test) or carry out the battery test after disconnecting the two terminals if necessary**,**
– check that the vehicle ignition is switched off,
– select the "battery connected to the vehicle" or "battery disconnected" test type using buttons [△] and [▽] Confirm using the green button [↵]
– The test is carried out to the EN standard by default. Confirm using the green button [↵].
– Select the starting power on the battery label (see page 3) using buttons [△] and [▽].

– Confirm using the green button [↵].
– The tool displays: **TEST IN PROGRESS**.
– The MIDTRONICS tool carries out the test and gives the results of the fault finding procedure.

To set the tool language, carry out the following operations:
– before connecting the tool, simultaneously press buttons [△] and [▽]
– connect the device to the battery,
– release the buttons,
– scroll through the languages using buttons [△] and [▽],
– confirm using the green button [↵].

Note:
The battery must always be disconnected in the following order:
– Wait for at least **1 minute** between switching the ignition off and disconnecting the battery, to enable the computer systems to go on standby.
– Wait for the engine cooling fan to stop completely.
– Disconnect the negative terminal first.

GETtheMANUALS.org

NOTES	None

CHECKING THE BATTERY	→	TEST1

GETtheMANUALS.org

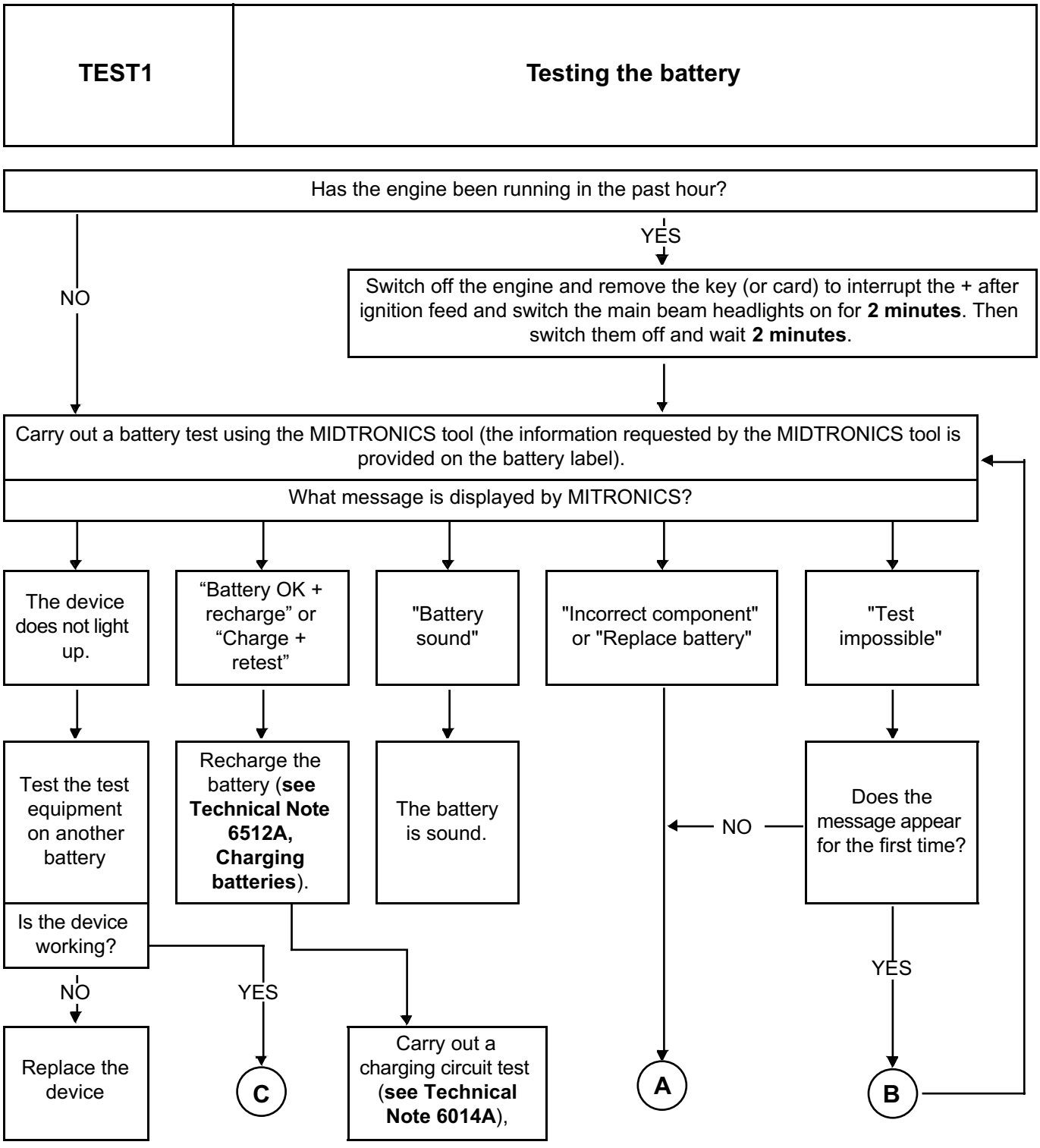

GETtheMANUALS.org

TEST1 CONTINUED

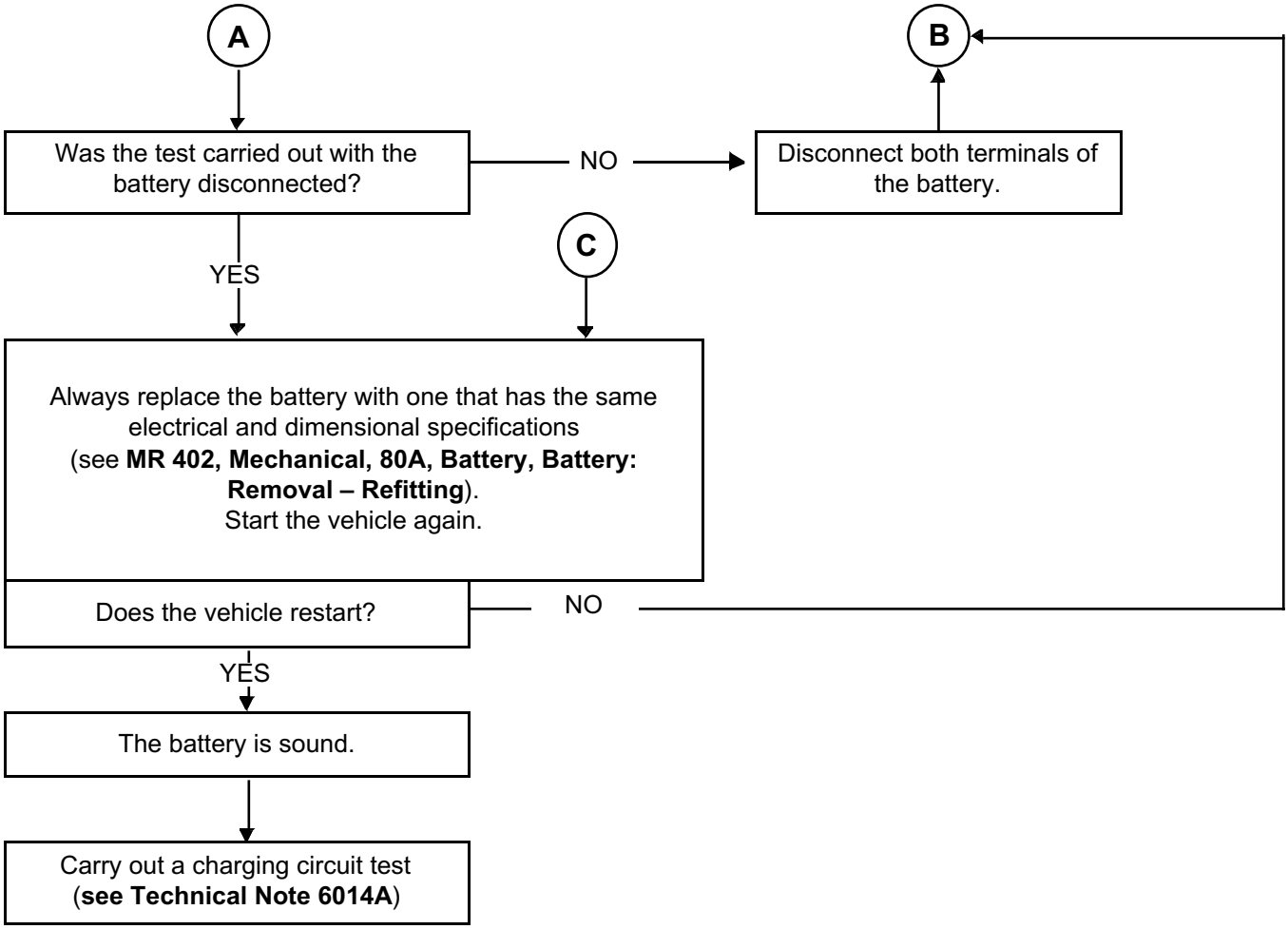

GETtheMANUALS.org

VEL SATIS

8 Electrical equipment

80B HEADLIGHTS

LAD
Vdiag No.: 44

Fault finding - Introduction	80B - 1
Fault finding - System operation	80B - 6
Fault finding - Allocation of computer tracks	80B - 8
Fault finding - Replacement of components	80B - 9
Fault finding - Configurations and programming	80B - 10
Fault finding - Summary table of faults	80B - 12
Fault finding - Interpretation of faults	80B - 13
Fault finding - Conformity check	80B - 29
Fault finding - Summary table of statuses	80B - 35
Fault finding - Interpretation of statuses	80B - 36
Fault finding - Parameter summary table	80B - 49
Fault finding - Summary table of controls	80B - 50
Fault finding - Interpretation of commands	80B - 51
Fault finding - Customer complaints	80B - 52
Diagnostic - Fault finding chart	80B - 53

FEBRUARY 2006 **EDITION ANGLAISE**

"The repair procedures given by the manufacturer in this document are based on the technical specifications current when it was prepared.

The methods may be modified as a result of changes introduced by the manufacturer in the production of the various component units and accessories from which his vehicles are constructed."

All rights reserved by Renault s.a.s.

Copying or translating, in part or in full, of this document or use of the service part reference numbering system is forbidden without the prior written authority of Renault s.a.s.

© Renault s.a.s. 2006

GETtheMANUALS.org

1. SCOPE OF THIS DOCUMENT

This document presents the fault finding procedure applicable to all computers with the following specifications:

Vehicle(s): **VelSatis Phase 2** *Function concerned:* **xenon bulb**	*Name of computer:* **LAD** *VDIAG No.:* **44**

2. PREREQUISITES FOR FAULT FINDING

Documentation type

Fault finding procedures (this manual):
– Assisted fault finding (integrated into the diagnostic tool), Dialogys.

Wiring diagrams:
– Visu-Schéma (CD-ROM), paper version.

Type of diagnostic tools

CLIP + CAN probe

Special tooling required

Special tooling required	
	Multimeter
Elé. 1674	Clip + CAN probe

GETtheMANUALS.org

3. RECAP

Faults:

Faults are declared as either present or stored (depending on whether they appeared in a certain context and have disappeared since, or whether they remain present but have not been diagnosed within the current context).

The **present** or **stored** status of faults should be taken into consideration when the diagnostic tool is used after the + after ignition supply is switched on (without acting on the system components).

For a **present fault**, apply the procedure described in the **Interpretation of faults** section.

For a **stored fault**, note the faults displayed and apply the instructions in the **Notes** section.

If the fault is **confirmed** when the instructions in the Notes section are applied, the fault is present. Deal with the fault

If the fault is **not confirmed**, check:
- the electrical lines which correspond to the fault,
- the connectors on these lines (corrosion, bent pins, etc.),
- the resistance of the component detected as faulty,
- the condition of the wires (melted or split insulation, wear).

Conformity check:

The aim of the conformity check is to check data that does not produce a fault display on the diagnostic tool when it is inconsistent. Therefore, this phase is used to:
- carry out fault finding on faults that do not have a fault display, and which may correspond to a customer complaint.
- check that the system is operating correctly and that there is no risk of a fault recurring after repair.

This section provides the fault finding procedures for statuses and parameters and the conditions for testing them.

If a status is not behaving normally or a parameter is outside the permitted tolerance values, consult the corresponding fault finding page.

Customer complaints - Fault finding chart

If the test with the diagnostic tool is OK but the customer complaint is still present, the fault should be treated by **Customer Complaints**.

A synopsis of the general procedure to follow is provided on the following page in the form of a flow chart.

GETtheMANUALS.org

4. FAULT FINDING PROCEDURE

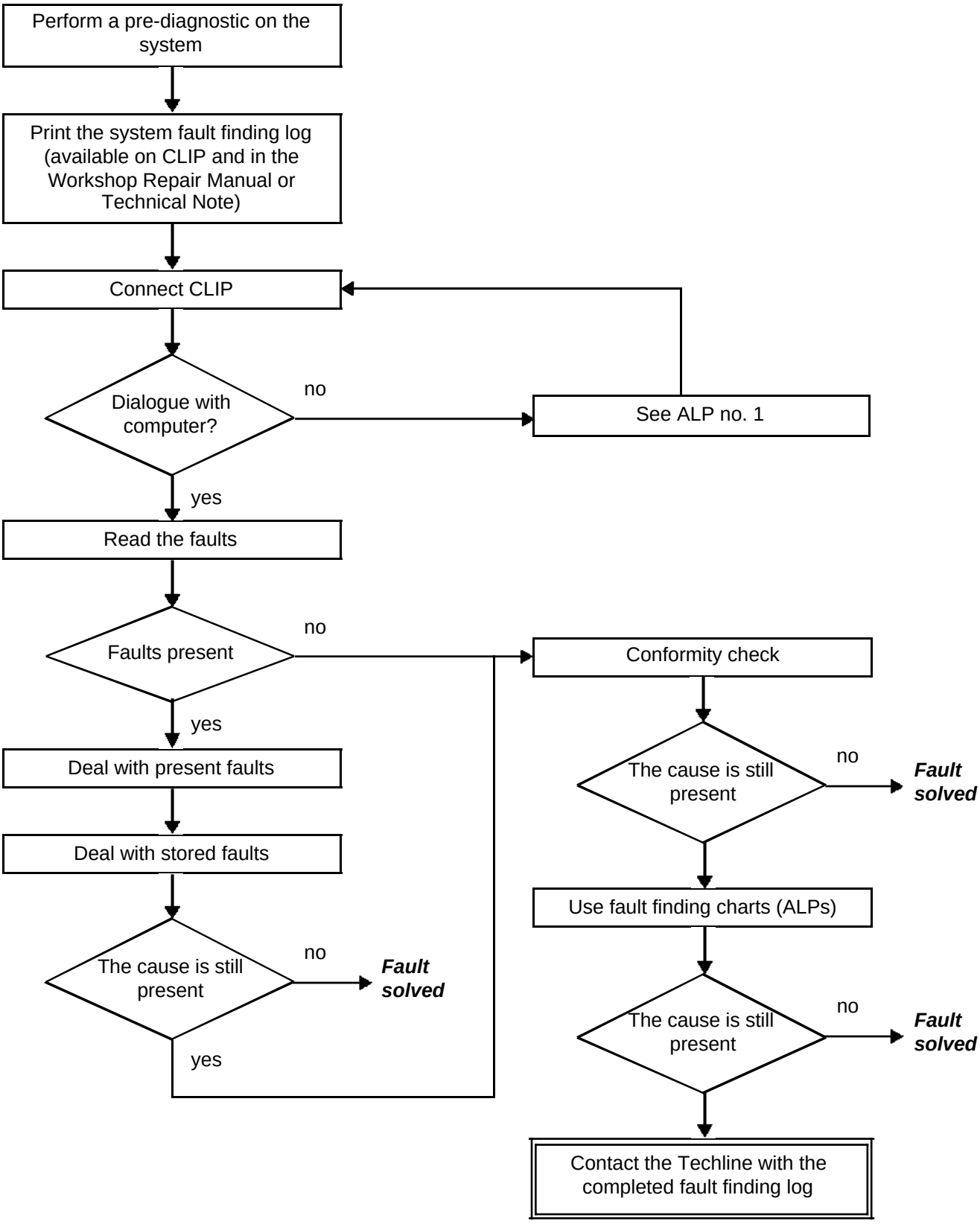

GETtheMANUALS.org

4. FAULT FINDING PROCEDURE (continued)

Wiring check:

Fault finding problems:
Disconnecting the connectors and/or manipulating the wiring harness may temporarily remove the cause of a fault.
Electrical measurements of voltage, resistance and insulation are generally correct, especially if the fault is not present when the analysis is made (stored fault).

Visual inspection:
Look for damage under the bonnet and in the passenger compartment.
Carefully check the fuses, insulators and wiring harness routing.
Look for signs of oxidation.

Tactile inspection:
While manipulating the wiring harness, use the diagnostic tool to note any change in fault status from stored to present.
Make sure that the connectors are properly locked.
Apply light pressure to the connectors.
Twist the wiring harness.
If there is a change in status, try to locate the source of the fault.

Inspection of each component:
Disconnect the connectors and check the appearance of the clips and tabs, as well as their crimping (no crimping on the insulating section).
Make sure that the clips and tabs are properly locked in the sockets.
Make sure that no clips or tabs have been dislodged during connection.
Check the clip contact pressure using an appropriate model of tab.

Resistance check:
Check the continuity of entire lines, then section by section.
Look for a short circuit to earth, to **+12 V** feed or to another wire.

If a fault is detected, repair or replace the wiring harness.

GETtheMANUALS.org

5. FAULT FINDING LOG

WARNING:

IMPORTANT
Any fault on a complex system requires thorough fault finding with the appropriate tools. The FAULT FINDING LOG, which should be completed during the procedure, enables you to keep track of the procedure which is carried out. It is an essential document when consulting the manufacturer.

IT IS THEREFORE MANDATORY TO FILL OUT A FAULT FINDING LOG EACH TIME FAULT FINDING IS CARRIED OUT.

You are always asked for this log:

- when requesting technical assistance from the Techline,
- for approval requests when replacing parts for which approval is obligatory,
- and it should be enclosed when returning monitored parts on request. The log is needed for warranty compensation, and enables better analysis of the parts removed.

6. SAFETY ADVICE

Safety rules must be observed during any work on a component to prevent any damage or injury:

– make sure that the battery is properly charged to avoid damaging the computers with a low load,
– do not smoke,
– use the appropriate tools,
– Do not touch the xenon bulbs, and do not work on the COSLAD system when it is in operation, as the voltage can be more than 20,000 V.

GETtheMANUALS.org

1. System description:

The vehicle on which a fault finding is being performed is fitted with a xenon bulb system.
This system allows:

- Dynamic correction of headlights (**LAD function**)

2. System layout:

Xenon bulb function:

The system comprises:

- a computer to manage information and control the actuators,
- a front height sensor mounted on the front axle to measure vehicle body height variations,
- a rear height sensor mounted on the rear axle to measure vehicle body height variations,
- two adjustment motors mounted inside the headlights,
- two voltage transformers (ballast) which cannot be diagnosed,
- two xenon bulbs located inside the headlights and which cannot be diagnosed.

3. Operation programming

Xenon bulb function:

The user requests that the dipped headlights are switched on by pressing on the control stalk.
The driver request is received by the UCH which sends it to the computer via the vehicle multiplex network.

The xenon bulb computer operates the headlight adjustment motors.

Signature:

When the xenon bulbs come on, the headlights run through the signature.
This function consists of operating the actuators to three different beam heights.
The driver is notified that the system is operating correctly.

Is the computer is faulty, the signature is not performed when the bulbs are switched on.

The signature is performed if the following conditions are fulfilled:

- stalk in dipped headlights position.
- system initialised,
- vehicle stationary or speed of **< 6 mph (10 km/h)**.

GETtheMANUALS.org

Dynamic correction:

This function allows correction of the xenon bulb beam height as a function of variations in vehicle body height and vehicle speed.

This information is provided by:
- the front and rear body sensors,
- the ABS computer (speed signal via the CAN network),
- the longitudinal acceleration sensor.

The xenon bulb computer operates the adjustment motors according to the information received, thereby obtaining optimal beam characteristics under all driving conditions.

Raise/lower according to speed:

This function allows operation of the adjustment motors to elevate the beam at a speed of more than **18 mph (30 km/h)**, to optimise driving comfort. The beam is adjusted as a function of the vehicle speed.

If the vehicle speed is **< 18 mph (30 km/h)**, the adjustment motors lower the beam.

Raised dipped beam function:

This function raises the beam of the dipped beam headlights when the main beam function is activated.
If an actuator is faulty, the raised dipped beam function is disabled. The fault information is sent to the CAN network which results in the faulty bulb being switched off. A warning message is sent by the UCH to the instrument panel, and the front fog lights are lit.

GETtheMANUALS.org

a) 12-track black connector

Track	Description
1	Not used
2	CAN H signal
3	Not used
4	CAN L signal
5	Rear sensor analogue signal
6	Sensor + supply
7	+ after ignition supply
8	Earth
9	Not used
10	Not used
11	Front sensor analogue signal
12	Sensor earth

b) 10-track black connector

Track	Description
1	Left-hand adjustment motor track 2
2	Left-hand adjustment motor track 4
3	Left-hand adjustment motor track 1
4	Left-hand adjustment motor track 3
5	Not used
6	Right-hand adjustment motor track 3
7	Right-hand adjustment motor track 1
8	Right-hand adjustment motor track 4
9	Right-hand adjustment motor track 2
10	Not used

GETtheMANUALS.org

a) Instructions to be followed after replacing the xenon bulb computer:

The following actions must be taken after replacing the xenon bulb computer:

- Allocate the computer to the vehicle by using configuration **CF001 Vehicle type**.
- Initialise the system using the **VP002 System initialisation** configuration.

b) Instructions to be followed after replacing one or both adjustment motors:

Replacement of an adjustment motor requires the manual adjustment of the headlights (see **MR 405 Mechanical, 80C, Xenon Headlights: Adjustment**).

c) Instructions to be followed after replacement of a height sensor:

Replacement of a height sensor requires initialisation of the system operating parameters.

Use the **VP002 System initialisation configuration** after each replacement of a height sensor.

GETtheMANUALS.org

Summary of configurations and system configuration readings:

CF001 and LC001 Vehicle type:

VelSatis ph2
Modus
Laguna II ph2
X 85

Use this configuration when the xenon bulb computer is replaced.
Select the vehicle on which fault finding is being run and confirm.
Switch off the ignition and wait for the immobiliser warning light to flash.
Switch on the ignition again and check configuration reading **LC001 Vehicle type**.
If you do not have the correct vehicle type, restart the configuration.

IMPORTANT
The system must be initialised after each configuration of the vehicle type.
Use the VP002 System initialisation configuration.

CF002 Dynamic correction: **WITH**

This configuration is used to activate beam adjustment according to the movements of the vehicle body recorded by the front and rear height sensors.
Select **WITH** to activate this feature.
Once the configuration is complete, switch off the ignition, and wait for the immobiliser warning light to flash.
Switch the ignition on again and check the **LC002 Dynamic correction** configuration reading.

LC002 Dynamic correction:

WITH
WITHOUT

This configuration reading should be **WITH** by default.
If **LC002 = WITHOUT** following replacement of the xenon bulb computer, use configuration **CF002 Dynamic correction**.

CF003 Automatic dipping of the headlights: **WITH**

This configuration is used to change the direction of the beam as a function of vehicle speed in order to improve driving comfort.
Select **WITH** to activate this feature.
Once the configuration is complete, switch off the ignition, and wait for the immobiliser warning light to flash.
Switch the ignition on again and verify the **LC003 Automatic dipping of the headlights** configuration reading.

LC003 Automatic dipping of the headlights:

WITH
WITHOUT

This configuration reading should be **WITH** by default.
If **LC003 = WITHOUT** following replacement of the xenon bulb computer, use configuration CF003 **Automatic dipping of the headlights**.

GETtheMANUALS.org

CF004 Raised dipped function: **WITH**

This configuration is used to raise the dipped headlights when the driver requests the main beam function.
Select **WITH** to activate this feature.
Once the configuration is complete, switch off the ignition, and wait for the immobiliser warning light to flash.
Switch the ignition on again and check the **LC004 Raised dip** configuration reading.

LC004 Raised dipped beam: **WITH**
WITHOUT

This configuration reading should be **WITH** by default.
If **LC004 = WITHOUT** following replacement of the xenon bulb computer, use configuration **CF004 Dynamic correction**.

CF005 Initialisation: **WITH**

This configuration is used to operate the adjustment motors when the xenon bulbs are switched on.
It tells the driver the system is operating correctly and there are no faults.
Select **WITH** to activate this feature.
Once the configuration is complete, switch off the ignition, and wait for the immobiliser warning light to flash.
Switch the ignition on again and check the **LC005 Initialisation** configuration reading.

LC005 Initialisation: **WITH**
WITHOUT

This configuration reading should be **WITH** by default.
If **LC005 = WITHOUT** following replacement of the xenon bulb computer, use configuration **CF005 Dynamic correction**.

VP002: System initialisation

This configuration must be used when replacing the xenon bulb computer or a body height sensor.
It is used to assign the operating values of the body height sensors in their initial position.

Run this command under the following conditions:
– vehicle stopped,
– + after ignition supply,
– no fault present in the computer,
– vehicle unladen,
– handbrake off,
– vehicle on horizontal flat ground,
– gearbox in neutral.

When the command is completed, switch off the ignition and wait for the immobiliser warning light to flash.

Switch the ignition on again and consult interpretation of status **ET002 Computer initialisation**.

If the status **ET002** does not become **COMPLETED**, carry out the configuration again.

GETtheMANUALS.org

Tool fault	Associated DTC	Diagnostic tool title
DF001	**9C05**	Computer
DF002	**9C01**	Front height sensor circuit
DF003	**9C00**	Rear height sensor circuit
DF004	**D200**	Vehicle speed signal
DF005	**9C0A**	Computer initialisation
DF009	**9C04**	Left-hand adjustment motor circuit
DF010	**9C03**	Right-hand adjustment motor circuit
DF11	**DC15**	Steering wheel position signal
DF013	**9C08**	Computer supply voltage
DF014	**9C0B**	Computer configuration

GETtheMANUALS.org

DF001 PRESENT OR STORED	COMPUTER 1.DEF : internal electronic fault

NOTES	**None.**

Disconnect the xenon bulb computer **12-track** black connector. Check the condition of the connections for corrosion, damage, etc. Repair if necessary.
If the fault is still present, contact the Techline.

AFTER REPAIR	Deal with any faults detected by the diagnostic tool. Clear the computer memory. Carry out a road test followed by another check with the diagnostic tool.

GETtheMANUALS.org

DF002 PRESENT OR STORED	FRONT HEIGHT SENSOR CIRCUIT CC.1 : short circuit to +12 V C0.0 : open circuit or short circuit to earth 1.DEF : values out of range

NOTES	**Conditions for applying the fault finding procedure to stored faults:** The fault is declared as present following a road test or a system initialisation.

CC.1	***NOTES***	**None.**

Manipulate the wiring harness between the xenon bulb computer and the front height sensor in order to produce a change in status (Present ↔ Stored).
Look for possible damage to the harness, and check the **connection and condition** of the front height sensor and its connection.
Repair if necessary.

Disconnect the front height sensor and check the condition of the connections (damage, corrosion, etc.).
Repair if necessary.

Check the continuity and insulation against +12 V of the following connections:

- black 12-track connector on the xenon bulb computer **track 11** → **track 4** of the front height sensor black connector
- black 12-track connector on the xenon bulb computer **track 6** → **track 5** of the front height sensor black connector
- black 12-track connector on the xenon bulb computer **track 12** → **track 1** of the front height sensor black connector

If the fault is still present, check the **intermediate connector R265** at **tracks A2, A3, A4**.
Repair if necessary.

If all the checks are OK, replace the front height sensor.

AFTER REPAIR	Deal with any faults detected by the diagnostic tool. Clear the computer memory. Carry out a road test followed by another check with the diagnostic tool.

GETtheMANUALS.org

DF002 **CONTINUED 1**	

C0.0	***NOTES***	**None.**

Manipulate the wiring harness between the instrument panel and the oil level sensor in order to produce a change in fault status (Present ↔ Stored).
Look for possible damage to the harness, and check the **connection and condition** of the height sensor and its connectors.
Repair if necessary.

Disconnect the front height sensor and check the condition of the connections (damage, corrosion, etc.).
Repair if necessary.

Check **the continuity and the absence of interference resistance** on the following connections:

- black 12-track connector on the xenon bulb computer **track 11** → **track 4** of the front height sensor black connector
- black 12-track connector on the xenon bulb computer **track 6** → **track 5** of the front height sensor black connector
- black 12-track connector on the xenon bulb computer **track 12** → **track 1** of the front height sensor black connector

Check the insulation against earth of the following connections:

- black 12-track connector on the xenon bulb computer **Track 11** → **track 4** of the front height sensor black connector
- black 12-track connector on the xenon bulb computer **Track 6** → **track 5** of the front height sensor black connector

If the fault is still present, check the **intermediate connector R265** at **tracks A2, A3, A4**.
Repair if necessary.

If all the checks are OK, replace the front height sensor.

AFTER REPAIR	Deal with any faults detected by the diagnostic tool. Clear the computer memory. Carry out a road test followed by another check with the diagnostic tool.

GETtheMANUALS.org

DF002 **CONTINUED 2**	

1.DEF	***NOTES***	**None.**

Check the condition of the sensor linkage rod. Replace if necessary.
Disconnect the front height sensor and check the condition of the connections (oxidation, damage, etc.). Repair if necessary.
Manipulate the harness between the height sensor and the computer in order to produce a fault status change (Present ↔ Stored). Look for possible damage to the harness, and check the **connection and condition** of the height sensor and its connectors. Repair if necessary.
Check **the continuity and the absence of interference resistance** on the following connections: black 12-track connector on the xenon bulb computer **track 11** → **track 4** of the front height sensor black connector black 12-track connector on the xenon bulb computer **track 6** → **track 5** of the front height sensor black connector black 12-track connector on the xenon bulb computer **track 12** → **track 1** of the front height sensor black connector If the fault is still present, check the **intermediate connector R2625** at **tracks A2, A3, A4**. Repair if necessary.
If all the checks are OK, replace the front height sensor.

AFTER REPAIR	Deal with any faults detected by the diagnostic tool. Clear the computer memory. Carry out a road test followed by another check with the diagnostic tool.

GETtheMANUALS.org

DF003 PRESENT OR STORED	REAR HEIGHT SENSOR CIRCUIT CC.1 : short circuit to +12 V CC.0 : short circuit to earth 1.DEF: values out of range

NOTES	**Conditions for applying the fault finding procedure to stored faults:** The fault is declared as present following a road test or a system initialisation.

CC.1	***NOTES***	**None.**

Manipulate the harness between the xenon bulb computer and the rear height sensor in order to produce a change in status (Present ↔ Stored).
Look for possible damage to the harness, and check the **connection and condition** of the rear height sensor and its connectors.
Repair if necessary.

Disconnect the front height sensor and check the condition of the connections (damage, corrosion, etc.).
Repair if necessary.

Check **the continuity and insulation against +12 V** of the following connections:

- black 12-track connector on the xenon bulb computer **track 5** → **track 4** of the front height sensor black connector
- black 12-track connector on the xenon bulb computer **track 6** → **track 5** of the front height sensor black connector
- black 12-track connector on the xenon bulb computer **track 12** → **track 1** of the front height sensor black connector

If the fault is still present, check the **intermediate connector R2625** at **tracks A2, A3, A5**.
Repair if necessary.

If all the checks are OK, replace the front height sensor.

AFTER REPAIR	Deal with any faults detected by the diagnostic tool. Clear the computer memory. Carry out a road test followed by another check with the diagnostic tool.

GETtheMANUALS.org

DF003 **CONTINUED 1**	

CO.0	***NOTES***	**None.**

Manipulate the harness between the instrument panel and the oil level sensor in order to produce a fault status change (Present ↔ Stored).
Look for possible damage to the harness, and check **the connection and condition** of the oil level sensor and its connections.
Repair if necessary.

Disconnect the front height sensor and check the condition of the connections (damage, corrosion, etc.).
Repair if necessary.

Check **the continuity and the absence of interference resistance** on the following connections:

- 12-track black connector of the xenon bulb computer **track 5** → **track 4** of the front height sensor black connector
- 12-track black connector of the xenon bulb computer **track 6** → **track 5** of the front height sensor black connector
- 12-track black connector of the xenon bulb computer **track 12** → **track 1** of the front height sensor black connector

Check the insulation against earth of the following connections:

- 12-track black connector of the xenon bulb computer **track 5** → **track 4** of the front height sensor black connector
- 12-track black connector of the xenon bulb computer **track 6** → **track 5** of the front height sensor black connector

If the fault is still present, check the **intermediate connector R2625** on **tracks A2, A3, A5**.
Repair if necessary.

If all the checks are OK, replace the front height sensor.

AFTER REPAIR	Deal with any faults detected by the diagnostic tool. Clear the computer memory. Carry out a road test followed by another check with the diagnostic tool.

GETtheMANUALS.org

DF003 **CONTINUED 2**	

1.DEF	***NOTES***	**None.**

Check the condition of the sensor linkage rod. Replace if necessary.
Manipulate the harness between the height sensor and the computer in order to produce a fault status change (Present ↔ Stored). Look for possible damage to the harness, and check the **connection and condition** of the height sensor and its connectors. Repair if necessary.
Disconnect the front height sensor and check the condition of the connections (damage, corrosion, etc.). Repair if necessary.
Check **the continuity and the absence of interference resistance** on the following connections: 12-track black connector of the xenon bulb computer **track 5** → **track 4** of the front height sensor black connector 12-track black connector of the xenon bulb computer **track 6** → **track 5** of the front height sensor black connector 12-track black connector of the xenon bulb computer **track 12** → **track 1** of the front height sensor black connector If the fault is still present, check the **intermediate connector R2625** on **tracks A2, A3, A5**. Repair if necessary.
If all the checks are OK, replace the front height sensor.

AFTER REPAIR	Deal with any faults detected by the diagnostic tool. Clear the computer memory. Carry out a road test followed by another check with the diagnostic tool.

GETtheMANUALS.org

DF004 PRESENT OR STORED	VEHICLE SPEED SIGNAL 1.DEF: vehicle speed signal error

NOTES	**Conditions for applying the fault finding procedure to stored faults:** The fault is declared present after a road test.

Test the multiplex network (see **88B, Multiplexing**) and interpret any faults present. Test the ABS computer (see **38C, Anti-lock braking system**).
If the fault is still present, contact the Techline.

AFTER REPAIR	Deal with any faults detected by the diagnostic tool. Clear the computer memory. Carry out a road test followed by another check with the diagnostic tool.

GETtheMANUALS.org

DF005 PRESENT	COMPUTER INITIALISATION 1.DEF: computer initialisation not performed

NOTES	**None.**

Fault **DF005** is directly associated with the status **ET002 Computer initialisation**.
If the computer initialisation has not been performed, run command **VP002 System initialisation**.
Follow the procedure described in the **Configurations and programming** section.
When the command has been completed, clear the faults and check that the **DF005** fault is absent.

If the fault is still present, contact the Techline.

AFTER REPAIR	Deal with any faults detected by the diagnostic tool. Clear the computer memory. Carry out a road test followed by another check with the diagnostic tool.

GETtheMANUALS.org

DF009 PRESENT OR STORED	LEFT-HAND ADJUSTMENT MOTOR CIRCUIT 1.DEF: unidentified electrical fault

NOTES	**Conditions for applying the fault finding procedure to stored faults:** The fault is declared present after: – the dipped headlights are switched on, – command **AC001 Adjustment motors** is run.

Special notes:
If the fault has appeared in the dipped headlights position:
- the left-hand adjustment motor will remain immobile,
- the left and right-hand adjustment motors will no longer be operated.

If the fault has appeared in the main beam headlights position:
- the left-hand adjustment motor will remain immobile,
- the right-hand adjustment motor will be pointing downwards,
- the left-hand dipped beam bulb will be off,
- the front fog lights will be lit,
- an instrument panel warning message will be sent.

AFTER REPAIR	Deal with any faults detected by the diagnostic tool. Clear the computer memory. Carry out a road test followed by another check with the diagnostic tool.

GETtheMANUALS.org

DF009 **CONTINUED**	

The **DF009** fault appears following:
- **an open circuit** on the left-hand adjustment motor control lines,
- **a short circuit to +12 V** on one of the left-hand adjustment motor control lines,
- **a short circuit between 2 control lines** of the left-hand adjustment motor,
- **a short circuit to earth** on one of the left-hand adjustment motor control lines.

Disconnect the black **4-track** left-hand adjustment motor connector.
Check the condition of the connections (oxidation, damage, etc).
Repair if necessary.

Check the **continuity, absence of interference resistance and insulation against +12 V, and the insulation against earth** on the following connections:

Xenon bulb computer, black 10-track connector, **track 2** → **track 4** of the left-hand adjustment motor black 4-track connector

Xenon bulb computer, black 10-track connector, **track 4** → **track 3** of the left-hand adjustment motor 4-track black connector

Xenon bulb computer, 10-track black connector, **track 1** → **track 2** of the left-hand adjustment motor 4-track black connector

Xenon bulb computer, 10-track black connector, **track 3** → **track 1** of the left-hand adjustment motor 4-track black connector

Repair if necessary.

With the connectors disconnected, check the insulation between each control wire.
If two wires are in short-circuit, repair the relevant connections.

If the fault is still present, replace the left-hand adjustment motor.

AFTER REPAIR	Deal with any faults detected by the diagnostic tool. Clear the computer memory. Carry out a road test followed by another check with the diagnostic tool.

GETtheMANUALS.org

DF010 **PRESENT**	RIGHT-HAND ADJUSTMENT MOTOR CIRCUIT 1.DEF: unidentified electrical fault

NOTES	**Conditions for applying the fault finding procedure to stored faults:** The fault is declared present after: – the dipped headlights are switched on, – command **AC001 Adjustment motors** is run.

Special notes:
If the fault has appeared in the dipped headlights position:
- the right-hand adjustment motor will remain immobile,
- the left and right-hand adjustment motors will no longer be operated.

If the fault has appeared in the main beam headlights position:
- the right-hand adjustment motor will remain immobile,
- the left-hand adjustment motor will be pointed pointed downwards,
- the right-hand dipped beam bulb will be off,
- the front fog lights will be lit,
- an instrument panel warning message will be sent.

AFTER REPAIR	Deal with any faults detected by the diagnostic tool. Clear the computer memory. Carry out a road test followed by another check with the diagnostic tool.

GETtheMANUALS.org

DF010 **CONTINUED**	

Fault **DF010** appears following:
- **an open circuit** on the right-hand adjustment motor control lines,
- **a short circuit to +12 V** on one of the right-hand adjustment motor control lines,
- **a short circuit between 2 control lines** of the right-hand adjustment motor,
- **a short circuit to earth** on one of the right-hand adjustment motor control lines,

Disconnect the black **4-track** right-hand adjustment motor connector
Check the condition of the connections (oxidation, damage, etc).
Repair if necessary.

Check the **continuity, absence of interference resistance and insulation against +12 V, and the insulation against earth** on the following connections:

Xenon bulb computer, 10-track black connector, **track 8** → **track 4** of the right-hand adjustment motor 4-track black connector
Xenon bulb computer, 10-track black connector, **track 6** → **track 3** of the right-hand adjustment motor 4-track black connector
Xenon bulb computer, 10-track black connector, **track 9** → **track 2** of the right-hand adjustment motor 4-track black connector
Xenon bulb computer, 10-track black connector, **track 7** → **track 1** of the right-hand adjustment motor 4-track black connector

Repair if necessary.

With the connectors disconnected, check the insulation between each control wire.
If two wires are in short circuit, repair the relevant connections.

If the fault is still present, replace the right-hand adjustment motor.

AFTER REPAIR	Deal with any faults detected by the diagnostic tool. Clear the computer memory. Carry out a road test followed by another check with the diagnostic tool.

GETtheMANUALS.org

DF011 PRESENT OR STORED	STEERING WHEEL POSITION SIGNAL 1.DEF: producer computer multiplex signals invalid

NOTES	**Conditions for applying the fault finding procedure to stored faults:** The fault is declared present after: – the steering wheel is turned to full lock, – a road test.

1.DEF	***NOTES***	This fault is outside the xenon bulb system. Fault present on the vehicle CAN network.

Test the electric power assisted steering (see MR 405 Mechanical, 36B, Interpretation of faults).

AFTER REPAIR	Deal with any faults detected by the diagnostic tool. Clear the computer memory. Carry out a road test followed by another check with the diagnostic tool.

GETtheMANUALS.org

DF013 PRESENT OR STORED	COMPUTER SUPPLY VOLTAGE 1.DEF : feed voltage too low 2.DEF : feed voltage too high

NOTES	**Conditions for applying the fault finding procedure to stored faults:** If the fault is declared present following: – engine start, – battery replacement.

1.DEF	***NOTES***	**None.**

Check the condition of the battery and the vehicle charge circuit.

2.DEF	***NOTES***	**None.**

Check for **+12 V** on **track 7** of the xenon bulb computer 12-track connector.
Repair if necessary.

If the fault is still present, check the condition of fuse: **F27 (10A)**.
Repair if necessary.

Check the following connection for continuity and make sure that there is no interference resistance:

Passenger compartment relay and fuse box, green connector, **track 1** → **Track 1** of the xenon bulb computer 5-track black connector

Vehicle earth → **Track 8** of the xenon bulb computer black 12-track connector.

Repair if necessary.

AFTER REPAIR	Deal with any faults detected by the diagnostic tool. Clear the computer memory. Carry out a road test followed by another check with the diagnostic tool.

GETtheMANUALS.org

DF014 **PRESENT**	COMPUTER CONFIGURATION 1.DEF: vehicle configuration not performed

NOTES	**None.**

If the **DF014** fault is present, the vehicle has not been configured.
Use the **CF001 Vehicle type** configuration (see **Configurations and programming**).

Once the procedure is completed, check for system faults.

AFTER REPAIR	Deal with any faults detected by the diagnostic tool. Clear the computer memory. Carry out a road test followed by another check with the diagnostic tool.

HEADLIGHTS
Fault finding - Conformity check

GETtheMANUALS.org

NOTES	Only check the conformity after a complete check with the diagnostic tool. **Operating conditions: Vehicle with the ignition and dipped headlights lit.**

MAIN SCREEN

Order	Function	Parameter or Status checked or Action	Display and Notes	Fault finding
1	Computer	**ET001:** Computer configuration	**COMPLETED**	If the **ET001** status remains **Not completed**, refer to interpretation of the **CF001 Vehicle type** configuration (see **Configurations and programming**).
		ET002: Computer initialisation	**NOT COMPLETED**	If the **ET002** status remains **Not completed**, consult the interpretation of the **VP002 Vehicle type** configuration (see **Configurations and programming**).
2	Supply voltages	**PR016:** Computer supply voltage	**10 V < PR016 < 15.5 V**	If one of the voltages does not comply with the operating values, consult the interpretation of faults: **DF013 Computer supply voltage, DF002 Front height sensor circuit and DF003 Rear height sensor circuit**.
		PR013: Height sensor supply voltage	**4.8 V < PR013 < 5.2 V**	
3	Engine	**ET018:** Engine	**RUNNING** **STOPPED**	**In the event of a fault**, test the multiplex network and deal with any faults present.
4	Reverse gear	**ET021:** Reverse gear signal	**PRESENT** **ABSENT**	**In the event of a fault**, test the multiplex network and deal with any faults present.

GETtheMANUALS.org

NOTES	Only check the conformity after a complete check with the diagnostic tool. **Operating conditions: Vehicle with the ignition and dipped headlights lit.**

MAIN SCREEN (CONTINUED)

Order	Function	Parameter or Status checked or Action	Display and Notes	Fault finding
5	Vehicle speed	**PR006:** Vehicle speed	**0 mph or km/h**	If the **PR006** parameter is not consistent, perform a multiplex network test and run fault finding on the **ABS** circuit to check the conformity of the vehicle speed signal.
6	Dipped headlights	**ET016:** Dipped headlights	**LIT** **OFF**	**In the event of a fault**, perform a test on the multiplex network and perform fault finding on the UCH (see **87C, Interpretation of faults**).
7	Main beam headlights	**ET017:** Main beam headlights	**LIT** **OFF**	**In the event of a fault**, perform a test on the multiplex network and perform fault finding on the UCH (see **87C, Interpretation of faults**).

GETtheMANUALS.org

NOTES	Only check the conformity after a complete check with the diagnostic tool. **Operating conditions: Vehicle with the ignition and dipped headlights lit.**

Sub-function: LIGHTING POSITION:

Order	Function	Parameter or Status checked or Action	Display and Notes	Fault finding
1	Height sensor feed voltage	**PR013:** Height sensor feed voltage	**4.8 V < PR013 < 5.2 V**	If the supply voltage is not within the operating range, check the charging circuit and the condition of the battery. If the fault is still present, consult the interpretation of faults: **DF002 Front height sensor circuit and DF003 Rear height sensor circuit**.
2	Sensor position signal	**PR011:** Front height sensor signal **PR012:** Rear height sensor signal	**12.5 % < X < 87.5 %**	If the height sensor operating values are out of range, consult the interpretation of faults: **DF002 Front height sensor circuit and DF003 Rear height sensor circuit**
3	Adjustment motor position	**PR008:** Right-hand adjustment motor position **PR009:** Left-hand adjustment motor position **PR021:** Left-hand adjustment motor position set point **PR022:** Right-hand adjustment motor position set point	**PR008 = PR022 ± 3 steps** **PR009 = PR021 ± 3 steps** **0 steps < X < 260 steps**	If the adjustment motor operating values are out of range, consult the interpretation of faults **DF009 Left-hand adjustment motor** and **DF010 Right-hand adjustment motor**
4	Actuator control	**AC001:** Adjustment motors	This command is for testing the operation of the adjustment motors.	If the adjustment motors do not move when the **AC001** command is executed, refer to interpretation of the **AC001** command.

GETtheMANUALS.org

NOTES	Only check the conformity after a complete check with the diagnostic tool. **Operating conditions: Vehicle with the ignition on and dipped headlights lit.**

Sub function: LIGHTING MANAGEMENT

Order	Function	Parameter or Status checked or Action	Display and Notes	Fault finding
1	Computer configuration	**ET002:** Computer initialisation	The **ET002** status should be **PERFORMED**	If status **ET002** is **NOT PERFORMED**, use command **VP002 System initialisation** (see **Configurations and Programming**).
		ET001: Computer configuration	The **ET001** status should be **PERFORMED**	If status **ET001** is **NOT PERFORMED**, use command **CF001 Vehicle type** (see **Configurations and Programming**).
2	Supply voltages	**PR016:** Computer supply voltage	**10 V < PR016 < 15.5 V**	If one of the voltages does not comply with the operating values, consult the interpretation of fault **DF013 Computer feed voltage**.
		PR013: Height sensor supply voltage	**4.8 V < PR013 < 5.2 V**	
3	Raised dip	**ET010:** Right-hand raised dipped beam **ET009:** Left-hand raised dipped beam	Statuses **ET010** and **ET009** should be **STATUS3** when the vehicle is stationary.	If status **ET010** or **ET009** is other than **STATUS3**, refer to interpretation of statuses **ET010** and **ET009** to find the strategy of the raised dipped beam.

GETtheMANUALS.org

NOTES	Only check the conformity after a complete check with the diagnostic tool. **Operating conditions: Vehicle with the ignition on and dipped headlights lit.**

Sub-function: LIGHTING MANAGEMENT (CONTINUED)

Order	Function	Parameter or Status checked or Action	Display and Notes	Fault finding
4	Dynamic correction	**ET005:** Right-hand adjustment **ET004:** Left-hand adjustment	Statuses **ET005** and **ET004** should be **ACTIVE** when the vehicle is stationary.	If status **ET005** or **ET004** is other than **ACTIVE**, refer to interpretation of statuses **ET004** and **ET005** to find the strategy for dynamic correction.
5	Vehicle speed	**PR006:** Vehicle speed	**0 mph or km/h**	If **PR006** parameter is inconsistent, test the multiplex network (see **88B, Multiplexing**), and perform fault finding on the **ABS** circuit to check the conformity of the vehicle speed signal (see **38C, Anti-lock braking system**).

GETtheMANUALS.org

NOTES	Only check the conformity after a complete check with the diagnostic tool. **Operating conditions: Vehicle with the ignition on and dipped headlights lit.**

Sub-function: LIGHTING CONTROL

Order	Function	Parameter or Status checked or Action	Display and Notes	Fault finding
1	Dipped headlights	**ET016:** Dipped headlights	**LIT**	**In the event of a fault**, test the multiplex network (see **88B, Multiplexing**), and perform fault finding on the UCH (see **87C, Interpretation of faults**).
		ET008: Request to turn off dipped headlights	**NO** **STATUS1** **STATUS2** **STATUS3**	**If an adjustment motor is faulty in the main beam position**, the computer cuts the power feed to the bulb associated with the faulty motor. **In the event of a fault**, refer to the interpretation of status **ET008**.
2	Main beam headlights	**ET017:** Main beam headlights	**LIT** **OFF**	**In the event of a fault**, test the multiplex network (see **88B, Multiplexing**), and perform fault finding on the UCH (see **87C, Interpretation of faults**).

GETtheMANUALS.org

Tool status	Tool name
ET001	Computer configuration
ET002	Computer initialisation
ET004	Left-hand adjustment
ET005	Right-hand adjustment
ET008	Request to turn off dipped headlights
ET009	Left-hand raised dipped beam
ET010	Right-hand raised dipped beam
ET016	Dipped headlights
ET017	Main beam headlights
ET021	Reverse gear signal

GETtheMANUALS.org

ET001	COMPUTER CONFIGURATION

NOTES	Status **ET001 COMPUTER CONFIGURATION** shows the system operation and authorises computer initialisation.

INHIBITED

If status **ET001** is **INHIBITED**, the computer cannot be initialised.

Possible causes:
- configuration not performed when configuration attempted,
- speed is not zero when configuration attempted,
- sensor fault or value out of range when configuration attempted.

Check height sensors.
Check vehicle configuration.

After repair, initialise the system using the **VP002** command.

When this procedure has finished, the **ET001** status should be **AUTHORISED**.

AUTHORISED

If status **ET001** is **AUTHORISED**, system initialisation is possible.

AFTER REPAIR	Carry out another fault finding check on the system. Deal with any other faults. Clear the stored faults.

GETtheMANUALS.org

ET002	COMPUTER INITIALISATION

NOTES	If status **ET002 COMPUTER INITIALISATION COMPUTER** is **INHIBITED**, system initialisation is impossible.

NOT COMPLETED

If status **ET002** is **NOT COMPLETED**, the computer is not initialised.
Fault **DF014 Computer configuration** is present, and the system functions are inhibited.
Use configuration **CF001 Vehicle type** by following the procedure given in the **Configuration and programming** section.
When this procedure has finished, the **ET002** status should be **COMPLETED**.

COMPLETED

If status **ET002** is **COMPLETED**, computer initialisation has been performed and the system is operating normally.

AFTER REPAIR	Carry out another fault finding check on the system. Deal with any other faults. Clear the stored faults.

GETtheMANUALS.org

ET004	LEFT-HAND ADJUSTMENT

NOTES	These checks are carried out only if the status is inconsistent with the system operating conditions.

ACTIVE

Status **ET004** is **ACTIVE** when the left-hand adjustment motor is operated by the computer:
- on switching on the dipped beam headlights
- during adjustment of the beam.

STATUS1: INITIALISATION

Status **ET004** is **STATUS1** when the system is in the initialisation phase.
The computer is informed of the initial positions of the adjustment motors and the height sensors.

STATUS2: DIPPED HEADLIGHT STANDBY

Status **ET004** is **STATUS2** when the dipped headlights are off.
The adjustment system is in standby mode.
The computer is informed of the initial positions of the adjustment motors and the height sensors.

AFTER REPAIR	Carry out another fault finding check on the system. Deal with any other faults. Clear the stored faults.

GETtheMANUALS.org

ET004 **CONTINUED 1**	

STATUS3: REFERENCING PHASE

Status **ET004** is **STATUS3** when the computer authorises the system signature.
The status is only visible for a brief moment.

STATUS4: SIGNATURE PHASE

Status **ET004** is **STATUS4** during the signature operation. The signature operation consists of operating the adjustment actuators at three different beam heights when the dipped headlights are switched on.
This action verifies correct operation of the system and checks for possible faults (see System Operation).

STATUS5: DELAY POWER FEED FREEZE WAITING

If a fault is present on the adjustment motors, the power supply to the motors is cut, and their position is locked.
Status **ET004** becomes **STATUS5**. No command is performed on the left-hand adjustment motor.

STATUS6: POWER SUPPLY FREEZE EXPIRED

The command lock is terminated, the system changes to defect mode.

AFTER REPAIR	Carry out another fault finding check on the system. Deal with any other faults. Clear the stored faults.

GETtheMANUALS.org

ET004 **CONTINUED 2**	

STATUS7: DEFECT MODE

Status **ET004** is **STATUS7** when:
- the left-hand adjustment motor is faulty,
- the rear height sensor is faulty,
- the computer feed voltage is **< 10 V for 10 seconds**.

Consult the relevant fault finding pages, and refer to their interpretation if necessary.
If there are no faults affecting the system, consult interpretation of the **AC001 Adjustment motors** command.

STATUS8: RAISED DIPPED FREEZE

Status **ET004** is **STATUS8**, when:
- the system is in raised dipped phase,
- a fault in the left-hand adjustment motor has been detected in the main beam position.

The raised dipped function is disabled until a repair is carried out.
The opposite adjustment motor is moved to the low position.
The system changes to defect mode.

STATUS9: RAISED DIPPED DEFECT MODE

The raised dipped function is no longer available on the left-hand adjustment motor.
The adjustment motor will no longer be operated whatever the operating conditions.
The motor will remain locked in one position.
The power supply to the left-hand bulb of the dipped headlights is cut.
The front fog lights have a power supply.

AFTER REPAIR	Carry out another fault finding check on the system. Deal with any other faults. Clear the stored faults.

GETtheMANUALS.org

ET005	RIGHT-HAND ADJUSTMENT

NOTES	These checks are carried out only if the status is inconsistent with the system operating conditions.

ACTIVE

Status **ET005** is **ACTIVE** when the left-hand adjustment motor is operated by the computer:
- on switching on the dipped beam headlights
- during adjustment of the beam.

STATUS1: INITIALISATION

Status **ET005** is **STATUS1** when the system is in the initialisation phase.
The computer is informed of the initial positions of the adjustment motors and the height sensors.

STATUS2: DIPPED HEADLIGHT STANDBY

Status **ET005** is **STATUS2** when the dipped headlights are off.
The adjustment system is in standby mode.
The computer is informed of the initial positions of the adjustment motors and the height sensors.

AFTER REPAIR	Carry out another fault finding check on the system. Deal with any other faults. Clear the stored faults.

GETtheMANUALS.org

ET005 **CONTINUED 1**	

STATUS3: REFERENCING PHASE

Status **ET005** is **STATUS3** when the computer authorises the system signature.
The status is only visible for a brief moment.

STATUS4: SIGNATURE PHASE

Status **ET005** is **STATUS4** during the signature operation. The signature operation consists of operating the adjustment actuators at three different beam heights when the dipped headlights are switched on.
This action verifies correct operation of the system and checks for possible faults (see System Operation).

STATUS5: DELAY POWER FEED FREEZE WAITING

If a fault is present on the adjustment motors, the power supply to the motors is cut, and their position is locked.
Status **ET005** becomes **STATUS5**. No command is performed on the left-hand adjustment motor.

STATUS6: POWER SUPPLY FREEZE EXPIRED

The command lock is terminated, the system changes to defect mode.

AFTER REPAIR	Carry out another fault finding check on the system. Deal with any other faults. Clear the stored faults.

GETtheMANUALS.org

ET005 **CONTINUED 2**	

STATUS7: DEFECT MODE

Status **ET005** is **STATUS7** when:
- the left-hand adjustment motor is faulty,
- the rear height sensor is faulty,
- the computer feed voltage is **< 10 V for 10 seconds**.

Consult the relevant fault finding pages, and refer to their interpretation if necessary.
If there are no faults affecting the system, consult interpretation of the **AC001 Adjustment motors** command.

STATUS8: RAISED DIPPED FREEZE

Status **ET005** is **STATUS8**, when:
- the system is in raised dipped phase,
- a fault in the left-hand adjustment motor has been detected in the main beam position.

The raised dipped function is disabled until a repair is carried out.
The opposite adjustment motor is moved to the low position.
The system changes to defect mode.

STATUS9: RAISED DIPPED DEFECT MODE

The raised dipped function is no longer available on the left-hand adjustment motor.
The adjustment motor will no longer be operated whatever the operating conditions.
The motor will remain locked in one position.
The power supply to the left-hand bulb of the dipped headlights is cut.
The front fog lights have a power supply.

AFTER REPAIR	Carry out another fault finding check on the system. Deal with any other faults. Clear the stored faults.

GETtheMANUALS.org

ET008	REQUEST TO TURN OFF DIPPED HEADLIGHTS

NOTES	These checks are carried out only if the status is inconsistent with the system operating conditions.

NO

Status **ET008** is **NO** during normal operation of the system.
There is no fault present in the system.

STATUS1: LEFT-HAND SIDE

Status **ET008** is **STATUS1** when a fault is detected in the main beam position on the left-hand adjustment motor circuit.
The computer cuts the power supply to the left-hand bulb of the dipped headlights.
The system is then in defect mode, the computer requests activation of the front fog lights.

STATUS2: RIGHT-HAND SIDE

Status **ET008** is **STATUS2** when a fault is detected in the main beam position on the right-hand adjustment motor circuit.
The computer cuts the power supply to the right-hand bulb of the dipped headlights.
The system is then in defect mode, the computer requests activation of the front fog lights.

STATUS3: BOTH SIDES

Status **ET008** is **STATUS3** when a fault is detected in the main beam position on both adjustment motor circuits.
The computer cuts the power supply to the right-hand bulb of the dipped headlights.
The system is then in defect mode, the computer requests activation of the front fog lights.

AFTER REPAIR	Carry out another fault finding check on the system. Deal with any other faults. Clear the stored faults.

GETtheMANUALS.org

ET009	LEFT-HAND RAISED DIPPED BEAM

NOTES	These checks are carried out only if the status is inconsistent with the system operating conditions.

DEACTIVATED

Status **ET009** is **DEACTIVATED** when the driver switches off the main beam headlight function.

ACTIVE

Status **ET009** is **ACTIVE** when the system is in the initialisation phase.
The computer is informed of the operating positions of the adjustment motors and the system sensors.

STATUS1: DRIVING MODE

Status **ET009** is **STATUS1 when the raised dipped beam function is activated and when the vehicle speed is > 6 mph (10 km/h)**.
The dipped beam is raised when the driver changes to main beam and dynamic correction is activated.

AFTER REPAIR	Carry out another fault finding check on the system. Deal with any other faults. Clear the stored faults.

GETtheMANUALS.org

ET009 **CONTINUED**	

STATUS2: STOP MODE

Status **ET009** is **STATUS2** when the raised beam function is not activated:
- Vehicle speed < 6 mph (10 km/h),
- Main beam headlights off.

Dynamic correction is activated and the beam is slightly raised.

STATUS3: EEPROM WRITE MODE

Status **ET009** is **STATUS3** when the xenon bulb computer is being configured.
This status is not visible in fault finding mode.

STATUS4: DEFECT MODE

Status **ET009** is **STATUS4** when a fault is detected on the left-hand adjustment motor in the main beam position.
The power feed to the right-hand dipped beam bulb is then cut and then the front fog lights power feed is activated.

AFTER REPAIR	Carry out another fault finding check on the system. Deal with any other faults. Clear the stored faults.

GETtheMANUALS.org

ET010	RIGHT-HAND RAISED DIPPED BEAM

NOTES	These checks are carried out only if the status is inconsistent with the system operating conditions.

DEACTIVATED

Status **ET010** is **DEACTIVATED** when the driver switches off the main beam headlight function.

ACTIVE

Status **ET010** is **ACTIVE** when the system is in the initialisation phase.
The computer is informed of the operating positions of the adjustment motors and the system sensors.

STATUS1: DRIVING MODE

Status **ET010** is **STATUS1 when the raised dipped beam function is activated and when the vehicle speed is > 6 mph (10 km/h)**.
The dipped beam is raised when the driver changes to main beam and dynamic correction is activated.

AFTER REPAIR	Carry out another fault finding check on the system. Deal with any other faults. Clear the stored faults.

GETtheMANUALS.org

ET010 **CONTINUED**	

STATUS2: STOP MODE

Status **ET010** is **STATUS2** when the raised beam function is not activated:
- Vehicle speed < 6 mph (10 km/h),
- If the main beam headlights are switched off, dynamic correction is activated and the dipped beam headlights are slowly raised.

STATUS3: EEPROM WRITE MODE

Status **ET010** is **STATUS3** when the xenon bulb computer is being configured.
This status is not visible in fault finding mode.

STATUS4: DEFECT MODE

Status **ET010** is **STATUS4** when a fault is detected on the left-hand adjustment motor in the main beam position. The power feed to the right-hand dipped beam bulb is then cut and then the front fog lights power feed is activated.

AFTER REPAIR	Carry out another fault finding check on the system. Deal with any other faults. Clear the stored faults.

GETtheMANUALS.org

Tool parameter	Tool name
PR004	Rear reference height
PR005	Front reference height
PR006	Vehicle speed
PR008	Right-hand adjustment motor position
PR009	Left-hand adjustment motor position
PR011	Front height sensor signal
PR012	Rear height sensor signal
PR013	Height sensor feed voltage
PR014	Raise/lower offset as a function of speed
PR016	Computer supply voltage
PR021	Left-hand adjustment motor position set point
PR022	Right-hand adjustment motor position set point

GETtheMANUALS.org

Tool command	Diagnostic tool title
RZ001	Fault memory.
AC001	Adjustment motors
VP001	Write VIN
VP002	System initialisation

GETtheMANUALS.org

AC001	ADJUSTMENT MOTORS

This command is for testing the control circuit of the adjustment motors. Select the actuators tab of the diagnostic tool. Select the command **AC001**. The adjustment motors should move while the command is executing.
Switch the lights on if necessary to verify the beam height variation.
If one or both of the motors do not move, consult the following fault codes: **DF009 Left-hand adjustment motor circuit,** **DF010 Right-hand adjustment motor control circuit.**

AFTER REPAIR	Deal with any faults detected by the diagnostic tool. Clear the computer memory. Carry out a road test followed by another check with the diagnostic tool.

HEADLIGHTS
Fault finding - Customer complaints

GETtheMANUALS.org

NOTES	**Only consult the customer complaints after performing a complete check with the diagnostic tool.**

NO DIALOGUE WITH THE XENON BULB COMPUTER	**ALP 1**
NO HEIGHT ADJUSTMENT ON EITHER OR BOTH HEADLIGHTS, REGARDLESS OF VEHICLE LOAD	**ALP 2**
DAZZLING OR LACK OF POWER OF ONE OR BOTH HEADLIGHTS	**ALP 3**

GETtheMANUALS.org

ALP 1	No dialogue with the xenon bulb computer

NOTES	Only consult this customer complaint after a complete check with the diagnostic tool.

Disconnect the xenon bulb computer black 12-track connector.
Check the condition of the connections: no corrosion, damaged contacts, etc.
Repair if necessary.

Check the battery voltage and carry out the operations required to obtain the correct voltage (**9.5 V < battery voltage < 16 V**).

Check for the presence and condition of fuse **F27 10A**.
Replace it if necessary.

Check **the continuity and the absence of interference resistance** on the following connections:
- black 12-track connector of the xenon bulb computer **track 7** → **track 1** of the fuse box black 6-track connector
- Xenon bulb computer black connector **track 8** → **Vehicle earth**

If the fault is still present, check the **R265 intermediate connector on track A6**.
Repair if necessary.

Check the **continuity of the CAN H and CAN L connections**:
- black 12-track connector of the xenon bulb computer **track 2** → **track 11** of the brown 20-track UCH connector
- black 12-track connector of the xenon bulb computer **track 4** → **track 1** of the brown 20-track UCH connector

Repair if necessary.

Check the power supply and earths of the diagnostic socket:
- presence of **+12 V before ignition** on **track 16**
- presence of **+12 V after ignition** on **track 1**
- presence of an earth on **tracks 4 and 5**.

If all the checks are OK, replace the front height sensor.

AFTER REPAIR	Deal with any faults detected by the diagnostic tool. Clear the computer memory. Carry out a road test followed by another check with the diagnostic tool.

GETtheMANUALS.org

ALP 2	No height adjustment on either or both headlights, regardless of vehicle load

NOTES	Only consult this customer complaint after a complete check with the diagnostic tool.

Verify the signature when the dipped headlights are switched on **with the vehicle stationary**. If the signature is not performed, the adjustment motors or one of the system components could be faulty.
Check the conformity and condition of fuse **F106 15A**. Replace it if necessary.
Use the **AC001 Adjustment motors** command to check the operation of the adjustment motors. If nothing happens when the command is run, refer to interpretation of the **AC001 Adjustment motors** command.
Check the conformity of the parameters **PR011** and **PR012 Front and rear height sensor signals**.
Check the conditions of the height sensor linkage rods: sticking, ball joint disconnected, damage to the sensor and electrical connections. Repair if necessary.
If the fault is still present, contact the Techline.

AFTER REPAIR	Deal with any faults detected by the diagnostic tool. Clear the computer memory. Carry out a road test followed by another check with the diagnostic tool.

GETtheMANUALS.org

ALP 3	Dazzling or lack of power in one or both headlights

NOTES	Only consult this customer complaint after a complete check with the diagnostic tool.

Check that headlights are properly mounted.
Check that the front right-hand and front left-hand lens units project their beams at the same level. If the heights of the units are different, adjust the headlights manually.
Check the mechanical components of the system (sensor mountings, linkage rods). Repair if necessary.
Perform an initialisation of the system using the **VP002** command (see procedure described in the Configurations and programming section).
Switch on the dipped beam headlights and use the **AC001 Adjustment motors** command. If the adjustment motors are actuated but the direction of the beam does change, check the condition of the adjustment motor/headlight linkage rods. Replace the faulty adjustment motor(s).
If the adjustment motors fail to move, replace the faulty adjustment motor(s). If the adjustment motors move and the direction of the beam changes, adjust the headlights manually.

AFTER REPAIR	Deal with any faults detected by the diagnostic tool. Clear the computer memory. Carry out a road test followed by another check with the diagnostic tool.

GETtheMANUALS.org

VEL SATIS

8 Electrical equipment

83A INSTRUMENT PANEL

Vdiag No.: 11

Fault finding - Introduction	83A - 2
Fault finding - System operation	83A - 7
Fault finding - Allocation of instrument panel tracks	83A - 10
Fault finding - Replacement of components	83A - 12
Fault finding - Configurations and programming	83A - 13
Fault finding - Fault summary table	83A - 19
Fault finding - Interpretation of faults	83A - 20
Fault finding - Conformity check	83A - 26
Fault finding - Status summary table	83A - 33
Fault finding - Interpretation of statuses	83A - 34
Fault finding - Parameter summary table	83A - 49
Fault finding - Interpretation of parameters	83A - 50
Fault finding - Command summary table	83A - 52
Fault finding - Interpretation of commands	83A - 53
Fault finding - Customer complaints	83A - 55
Diagnostic - Fault finding chart	83A - 57

V3 **Edition Anglaise**

"The repair procedures given by the manufacturer in this document are based on the technical specifications current when it was prepared.

The procedures may be modified as a result of changes introduced by the manufacturer in the production of the various component units and accessories from which his vehicles are constructed."

All rights reserved by Renault s.a.s.

Copying or translating, in part or in full, of this document or use of the service part reference numbering system is forbidden without the prior written authority of Renault s.a.s.

© Renault s.a.s.

GETtheMANUALS.org

1. SCOPE OF THIS DOCUMENT

This document presents the fault finding procedure applicable to all computers with the following specifications:

Vehicle(s): **VEL SATIS** *Function concerned:* **Instrument panel**	*Name of computer:* **Instrument panel** *Vdiag No.:* **11**

2. PREREQUISITES FOR FAULT FINDING

Documentation type

Fault finding procedures (this manual):
– Assisted fault finding (integrated into the diagnostic tool), Dialogys.
Wiring Diagrams:
– Visu-Schéma (CD-ROM), paper.

Type of diagnostic tools

CLIP + CAN probe

Special tooling required

Special tooling required	
	Multimeter
Elé. 1681	Universal bornier

3. RECAP

Procedure

In order to save energy, the Laguna II Phase 2 UCH cuts off the + after ignition feed after 3 minutes.

To perform fault finding on a computer, it is possible to force the + after ignition feed for 1 hour by applying the following procedure:
– press the card unlocking button,
– insert the card in the reader,
– if the ignition is switched on, press the Start button (interruption of timed + after ignition feed),
– press and hold the Start button for over 5 seconds until the engine immobiliser warning light starts to flash rapidly (4 Hz).

This forced + after ignition feed mode remains active for 1 hour.

Pressing the Start button or removing the card from the reader cuts off the forced + after ignition feed but does not cut off the timed forced + after ignition feed mode. As long as one hour has not elapsed the + after ignition feed function restarts the forced + after ignition feed for the remaining time.

GETtheMANUALS.org

Faults

Faults are declared as either present or stored (depending on whether they appeared in a certain context and have disappeared since, or whether they remain present but have not been diagnosed within the current context).

The **present** or **stored** status of faults should be taken into consideration when the diagnostic tool is used following the + after ignition supply being switched on (without acting on the system components).

For a **present fault**, apply the procedure described in the **Interpretation of faults** section.

For a **stored fault**, note the faults displayed and apply the instructions in the **Notes** section.

If the fault is **confirmed** when the instructions in the Notes section are applied, the fault is present. Deal with the fault.

If the fault is **not confirmed**, check:
- the electrical lines which correspond to the fault,
- the connectors on these lines (corrosion, bent pins, etc.),
- the resistance of the component detected as faulty,
- the condition of the wires (melted or split insulation, wear).

Conformity check

The aim of the conformity check is to check data that does not produce a fault display on the diagnostic tool when it is inconsistent. Therefore, this stage is used to:
- carry out fault finding on faults that do not have a fault display, and which may correspond to a customer complaint.
- check that the system is operating correctly and that there is no risk of a fault recurring after repair.

This section provides the fault finding procedures for statuses and parameters and the conditions for testing them.

If a status is not behaving normally or a parameter is outside the permitted tolerance values, consult the corresponding fault finding page.

Customer complaints - Fault finding chart

If the test with the diagnostic tool is OK but the customer complaint is still present, the fault should be treated by **Customer complaints**.

A summary of the overall procedure to follow is provided on the following page in the form of a flow chart

GETtheMANUALS.org

4. FAULT FINDING PROCEDURE

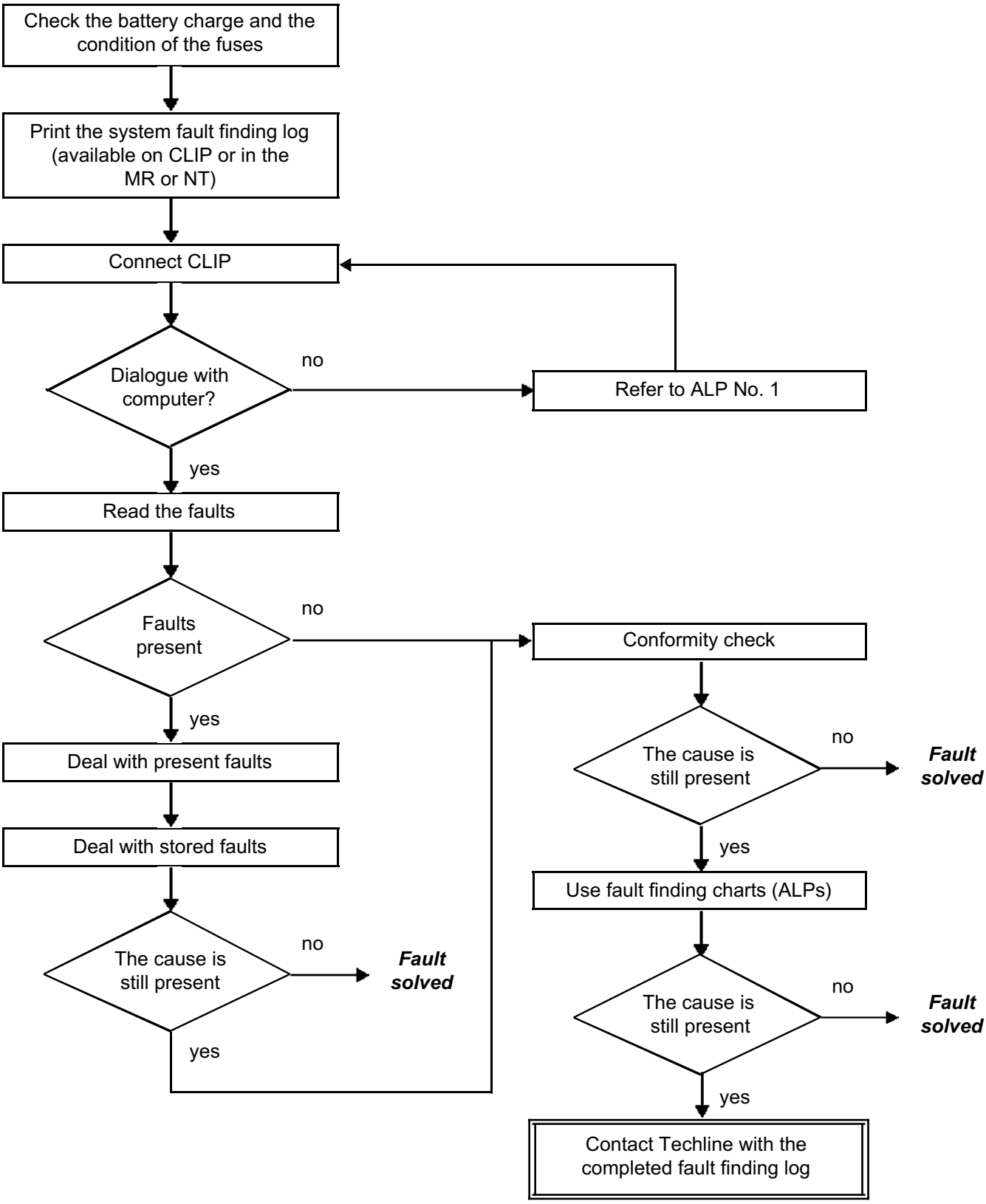

GETtheMANUALS.org

4. FAULT FINDING PROCEDURE (continued)

Wiring check

Fault finding problems

Disconnecting the connectors and/or manipulating the wiring harness may temporarily remove the cause of a fault.
Electrical measurements of voltage, resistance and insulation are generally correct, especially if the fault is not present when the analysis is made (stored fault).

Visual inspection

Look for damage under the bonnet and in the passenger compartment.
Carefully check the fuses, insulators and wiring harness routing.
Look for signs of oxidation.

Tactile inspection

While manipulating the wiring harness, use the diagnostic tool to note any change in fault status from stored to present.
Make sure that the connectors are properly locked.
Apply light pressure to the connectors.
Twist the wiring harness.
If there is a change in status, try to locate the source of the fault.

Inspection of each component

Disconnect the connectors and check the appearance of the clips and tabs, as well as their crimping (no crimping on the insulating section).
Make sure that the clips and tabs are properly locked in the sockets.
Make sure that no clips or tabs have been dislodged during connection.
Check the clip contact pressure using an appropriate model of tab.

Resistance check

Check the continuity of entire lines, then section by section.
Look for a short circuit to earth, to **+ 12 V** or to another wire.

If a fault is detected, repair or replace the wiring harness.

GETtheMANUALS.org

5. FAULT FINDING LOG

IMPORTANT

IMPORTANT
Any fault on a complex system requires thorough fault finding with the appropriate tools. The FAULT FINDING LOG, which should be completed during the fault finding procedure, ensures a record is kept of the procedure carried out. It is an essential document when consulting the manufacturer.

IT IS THEREFORE ESSENTIAL THAT THE FAULT FINDING LOG IS FILLED OUT EVERY TIME IT IS REQUESTED BY TECHLINE OR THE WARRANT RETURNS DEPARTMENT.

You will always be asked for this log:
- when requesting technical assistance from the Techline.
- for approval requests when replacing parts for which approval is obligatory.
- to be attached to monitored parts for which reimbursement is requested. The log is needed for warranty reimbursement, and enables better analysis of the parts removed.

6. SAFETY GUIDELINES

Safety rules must be observed during any work on a component to prevent any damage or injury:
- Check that the battery is properly charged to avoid damaging the computers in the event of a low load,
- Do not smoke,
- Use the appropriate tools.

GETtheMANUALS.org

1. Instrument panel functions:

– Features on petrol versions:
  - gas (LPG) indicator light,
  - rev counter up to **7125 rpm**.

– Features on diesel versions:
  - Exhaust particle filter indicator light,
  - rev counter up to **5000 rpm**.

– Needle gauge displays:
  - vehicle speed,
  - rev counter,
  - fuel level (petrol, diesel or gas),
  - engine coolant temperature.

– LCD displays:
  - mileometer and trip mileometer: ABS/ESP signal via the CAN,
  - oil level,
  - Trip Computer:
    - fuel consumed (petrol or diesel),
    - average consumption (petrol or diesel),
    - instantaneous consumption (petrol or diesel),
    - fuel range (petrol or diesel),
    - gas consumed,
    - average gas consumption,
    - fuel range,
    - distance travelled,
    - average speed,
    - mileage before oil change.

– Display on a single-colour dot matrix display informing the driver of the operating status of the vehicle using a system of colours:
  – white: status message (cruise control, keyless vehicle, etc.),
  – amber: hazard warning (tyre pressure monitor sensor not operational, etc.),
  – red: danger warning (coolant temperature, etc.).

– The information display is used for the following functions:
  - keyless vehicle,
  - tyre pressure monitor,
  - opening element statuses,
  - Automatic transmission indicator (option),
  - etc. (approximately 70 messages per language - 4 lines of 13 characters).

Notes
It is possible to enter instrument panel **self-test mode.** To do this, it is necessary to **switch on the ignition** while pressing the **trip computer scroll button** on the end of the wiper stalk.

GETtheMANUALS.org

– Management of a multifunction buzzer:
  The audible alert is used for the following functions:
  - indicating the operation of the direction indicator,
  - indicating that the lights have been left on accidentally,
  - indicating to the driver the activation/deactivation of automatic locking when driving,
  - indicating the failure of the childproof lock system,
  - indicating that the driver's position is stored,
  - indicating that the parking brake is not applied,
  - indicating that the driver's or passenger's seat belts are not fastened when driving,
  - signalling the start of the display of all the level 1 warnings (associated with the STOP warning light):
    – severe injection failure,
    – brake circuit or Electronic Braking Distribution fault,
    – battery charge circuit fault,
    – oil pressure fault,
    – engine coolant temperature warning,
    – immobiliser system fault,
    – lock fault,
    – parking brake fault,
  - indicating a first level tyre pressure monitor fault: major air leak or puncture,
  - low fuel warning,
  - indicating that a door or the tailgate is not correctly closed,
  - indicating that the handbrake is applied while the vehicle is being driven,
  - indicating a request to manage the cruise control,
  - indicating activation or deactivation of the cruise control,
  - indicating that a speed has been exceeded, for Arabian versions, where an overspeed warning is legally required.

  The audible alert is operational as soon as the instrument panel is started.
  The following buzzers can sound:
  - lights on,
  - direction indicators,
  - card left in reader,
  - automatic parking brake.

– Instrument panel dimmer: the instrument panel brightness can be adjusted using a button when the side lights are switched on.
– Certain functions or configurations are set by programming with the diagnostic tool.

– The oil level is measured after a set period; the voltage difference being measured across the terminals of the oil level sensor. This difference in voltage is processed by a circuit board, which sends this signal to the level indicator.

– For the "Change oil" and "Change oil as soon as possible" messages:
  The oil service interval distance and time values and the mileage before oil change are reinitialised after an oil change in accordance with two parameters: "Initial mileage before oil change and "Initial time before oil change".

  Reaching the 1st warning level: Oil change required soon
  When the mileage before oil change falls to 9,000 miles (1,500 km) OR the time interval falls to 2 months, the first warning level is reached: "Oil change required soon".

  Reaching the 2nd warning level: Change oil as soon as possible
  When the mileage before oil change OR the time before oil change to 0, the second warning level is reached and "Change oil as soon as possible" is displayed (with the SERVICE warning light coming on)

GETtheMANUALS.org

2. Display following defect mode

Trip Computer parameters	Fuel consumed fault present	ABS stored fault present	ECU stored fault present	LPG/CNG stored absence fault	petrol/ diesel sender stored fault present	Gas sender fault	fault(s) Currently being detected
Petrol/diesel consumed	dashes flashing at 2 Hz	no effect	dashes flashing at 2 Hz	no effect	no effect	no effect	Value remains unchanged
Petrol/diesel average consumption	dashes flashing at 2 Hz	dashes flashing at 2 Hz	dashes flashing at 2 Hz	no effect	no effect	no effect	Value remains unchanged
Petrol/diesel instantaneous consumption	dashes flashing at 2 Hz	dashes flashing at 2 Hz	dashes flashing at 2 Hz	no effect	no effect	no effect	Value remains unchanged
Petrol/diesel fuel range	dashes flashing at 2 Hz	dashes flashing at 2 Hz	dashes flashing at 2 Hz	no effect	dashes flashing at 2 Hz	no effect	Value remains unchanged
Gas consumed	dashes flashing at 2 Hz	no effect	dashes flashing at 2 Hz	dashes flashing at 2 Hz	no effect	no effect	Value remains unchanged
Average gas consumption	dashes flashing at 2 Hz	dashes flashing at 2 Hz	dashes flashing at 2 Hz	dashes flashing at 2 Hz	no effect	no effect	Value remains unchanged
Gas fuel range	dashes flashing at 2 Hz	dashes flashing at 2 Hz	dashes flashing at 2 Hz	dashes flashing at 2 Hz	no effect	dashes flashing at 2 Hz	Value remains unchanged
Distance travelled	no effect	dashes flashing at 2 Hz	no effect	no effect	no effect	no effect	Value remains unchanged
Average speed	no effect	dashes flashing at 2 Hz	no effect	no effect	no effect	no effect	Value remains unchanged
Oil service interval	no effect	dashes flashing at 2 Hz	no effect	no effect	no effect	no effect	Value remains unchanged
Miscellaneous	Letter "d" displayed on the 3rd digital line in Test mode	no effect	no effect	no effect	Letter "j" displayed on the 2nd digital line in test mode	no effect	no effect

GETtheMANUALS.org

Instrument panel computer, 30-track connector:

Tracks	Description
1	Driver's door
2	Right-hand direction indicator
3	Left-hand direction indicator
4	+ battery feed
5	Verlog Led control
6	Driver's seat belt
7	Safety Line output
8	Dipped headlights
9	Main beam headlights
10	Seat belt warning light supply
11	Rear fog lights
12	Front fog lights
13	Minimum washer fluid
14	Battery charge
15	Heated seats
16	+ After ignition feed
17	**RESERVE PHASE 1**
18	Oil pressure
19	Bonnet input
20	Not used
21	+ Oil level sensor
22	+ Fuel sender feed
23	Not used
24	Earth
25	- Fuel sender
26	- Oil level sensor
27	+ Side light feed
28	Repeat button
29	Parking brake input
30	Nivocode input

GETtheMANUALS.org

Instrument panel computer, 15-track connector:

Tracks	Description
1	Opening element indicator light output
2	Mute button
3	Negative seat belt warning light output
4	Not used
5	Dimmer
6	Odometer/trip computer scroll
7	Not used
8	Vehicle CAN_H copy output
9	Not used
10	Vehicle CAN_H
11	Vehicle CAN_L
12	**RESERVE PHASE 1**
13	Vehicle CAN_L copy output
14	Negative AIRBAG OFF warning light output
15	Positive AIRBAG OFF warning light feed

GETtheMANUALS.org

1. REPLACING, PROGRAMMING OR REPROGRAMMING THE INSTRUMENT PANEL:

For any operation involving the replacement of the instrument panel, follow the procedure described in the following paragraph (see **Configuration and programming**).

NOTE
After programming, reprogramming or replacing the instrument panel, it is essential to run the command **VP011 Fuel sender calibration**.

GETtheMANUALS.org

1. CONFIGURATIONS:

If the instrument panel has never been configured, the **NO PROG** message appears on the display when the ignition is switched on.

WARNING
It is necessary to take into account the configurations, in order that the new configuration values are used by the system.

CF or LC No.	Configuration	Note:
CF018 or LC001	**Reserve tank capacity**	
	→ LAGUNA II phase 2 (and phase 1)	= 6 l
	→ VELSATIS phase 2 (and phase 1)	= 9 l
CF019 or LC003	**Trip Computer display type**	
	→ Europe (l/100 km) → GB (miles/gallon) → Brazil (km/l)	Check the presence or absence of the instantaneous consumption trip computer screen
CF035 or LC006	**Tank capacity**	
	→ LAGUNA II phase 2 (phase 1)	= 70 l
	→ VELSATIS phase 2 (phase 1)	= 80 l
CF039 or LC065	**UCH**	
	→ VELSATIS → VELSATIS phase 2	
CF040 or LC066	**Particle filters**	
	→ None → With	If the vehicle is a VELSATIS phase 1, always configure CF040 to WITHOUT even if the vehicle is fitted with a particle filter.
CF049 or LC070	**Oil pressure warning threshold**	
	→ P9X/V4Y → Others	

GETtheMANUALS.org

CF050 or LC071	**Oil measurement temperature threshold**		
	→	V4Y	
	→	Others	
CF053 or LC072	**Oil measurement delay**		
	→	V4Y	
	→	Others	
CF054 or LC073	**Parking distance control function**		
	→	None	Front parking distance control configuration.
	→	With	
CF125 or LC002	**Language version**		
	→	French	
	→	English	
	→	Italian	
	→	German	
	→	Spanish	
	→	Dutch	
	→	Portuguese	
	→	Turkish	
	→	Japanese	
	→	Russian	
CF136 or LC047	**Tyre pressure units**		
	→	Bar	To select the unit of measurement that the tyre pressures will be displayed in.
	→	Psi	
CF137 or LC030	**Vehicle type**		
	→	VELSATIS	To select the vehicle in which the instrument panel is to be installed.

GETtheMANUALS.org

CF138 or LC049	**Type of fuel**	
	→ Petrol → Diesel	Petrol: Check that the rev counter indicates the scale to a maximum of 7000 rpm. Diesel: Check that the rev counter indicates the scale to a maximum of 6000 rpm, and that the preheating warning light comes on when the ignition is switched on. **IMPORTANT** **This check is important, because it also determines the correct operation of the gauges.**
CF139 or LC050	**Voice synthesiser**	
	→ None → With	**(VELSATIS only)**
CF140 or LC051	**Unit of distance**	
	→ Km → Miles	
CF141 or LC052	**Overspeed function - Arabia**	
	→ None → With	Driving **at more than 78 mph (130 km/h)**, you should hear a warning
CF142 or LC053	**Electronic stability program (ESP)**	
	→ With	If the vehicle is equipped with ESP: check, by pushing on the ESP OFF button, that "ESP deactivated" message definitely appears.
CF145 or LC056	**Tyre pressure monitor**	
	→ None → With	If the vehicle is equipped with a tyre pressure monitoring system: check that the vehicle profile does not remain displayed without the wheels and that there is no "Pressure not monitored" message (message indicating the absence of the tyre pressure monitoring system packets).

GETtheMANUALS.org

CF146 or LC057	**Automatic parking brake**		
	→	With	**IMPORTANT** If the instrument panel is configured **without automatic parking brake** and the vehicle is equipped with this function, the instrument panel displays **NO PROG** on the matrix display.
CF148 or LC059	**Automatic headlighting**		
	→	With → None	Disconnect the automatic headlights, and check that the "Auto Headlights Off" message is displayed.
CF149 or LC029	**Gearbox type**		
	→	Automatic gearbox connection → Sequential gearbox → Manual gearbox	If the vehicle has an automatic transmission or sequential gearbox, check that the instrument panel shows the gear selected. If the vehicle is not equipped with an automatic transmission or sequential gearbox, check that there is no "Check gearbox" message (this message indicates the absence of the automatic transmission frames if the instrument panel has been configured for an automatic transmission or sequential gearbox).
CF150 or LC061	**Cruise control/speed limiter**		
	→	With → None → Distance control/speed limiter (automatic)	If the vehicle is equipped with a Cruise Control - Speed Limiter function: check that the cruise control or speed limiter warning light comes on when the cruise control/ speed limiter button is pressed.
CF158 or LC064	**Seat belt reminder buzzer**		
	→	With → None	
CF196 or LC101	**Forward strategy on cruise control/speed limiter**		
	→	With → None	For vehicles fitted with cruise control: If this has been incorrectly configured, a difference in speed will appear between the regulator speed setpoint and the vehicle speed displayed by the instrument panel.

GETtheMANUALS.org

Oil service interval:

– The time and mileage before oil change displayed need to be reinitialised after the oil is changed in accordance with the two parameters which can be configured with the CLIP tool, **VP008 Distance before oil change: current in km** and **VP009 Time before oil change: current value in months**.

Reaching the 1st warning level: Oil change required soon

– When the mileage before oil change falls to 900 miles (1,500 km) OR the time before next oil change falls to **2 months** the first warning level is reached **Oil change A**

Reaching the 2nd warning level: Change oil as soon as possible

– When the mileage before oil change OR oil change interval reaches zero, the second warning level is reached and "Change oil as soon as possible" is displayed (with the **SERVICE** warning light coming on)

Oil change frequency:

This configuration must only be used if the instrument panel is **new**.
This configuration updates the new instrument panel, in accordance with two parameters which can be configured by the CLIP tool, **VP006 Oil change frequency in KM** and **VP007 Oil change frequency in months** from the old instrument panel.
Refer the driver's handbook for the vehicle for the mileage and time interval for the vehicle according to the country.
Ignition on, engine off. Run command **VP006 Oil change frequency in KM**.
Enter the Oil service interval in km.

Example of entry:
Using the Clip numeric keypad, type 20 to display 20,000 kilometres
or
enter 30 to display 30,000 kilometres

Special features of UK versions:
The new instrument panel is supplied configured, by default, in kilometres.
In addition to the language configuration **CF125 "Language version" (KM → Miles**), carry out the calculation below to allow the instrument panel to display consistent values between the **distance** before next oil change and the desired **oil service interval frequency**.
To display the oil service intervals in **Miles, multiply** the value in miles indicated in the maintenance service booklet by **10** then **divide** by **6**, to find the exact figure in **kilometres**.
After the value has been entered, the computer automatically performs the conversion into **miles** for the **oil change frequency**.
It is imperative to use the following procedure for correct functioning of the range and oil change frequency.

Example:
18,000 miles x 10 = 180,000 miles, then divide by 6 = 30,000 Km (**Enter 30**)

GETtheMANUALS.org

Odometer

This configuration must only be used if the instrument panel is **new**.
This configuration updates the mileometer on the new instrument panel, in accordance with a parameter configured by the CLIP tool, **VP010 Update mileometer**.
The update counter increments every time the instrument panel mileage is updated (maximum 15). This update counter is in the EEPROM and can only be reinitialised by the production or After-Sales services. The value of the update counter corresponds to a reset EEPROM value.

Calibration of the fuel sender

This configuration must only be used if the instrument panel is **new**.
This configuration reinitialises the measurement of the fuel level on the new instrument panel, in accordance with a parameter configured by the CLIP tool **VP011 Fuel sender calibration**.
Ignition on, engine off. Run command **VP011 Fuel sender calibration**.
The range of the nominal measurement is from **15 Ω** to **320 Ω** and the instrument panel converts the resistance value into litres.

2. PROGRAMMING:

None concerned.

GETtheMANUALS.org

Tool fault	Associated DTC	Diagnostic tool title
DF007	**9402**	Fuel sender circuit
DF009	**9407**	Oil pressure sensor circuit
DF016	**9401**	Oil level sensor circuit
DF018	**9405**	Instrument panel
DF019	**9404**	Battery voltage
DF020	**9406**	Steering column lock circuit

GETtheMANUALS.org

DF007 PRESENT OR STORED	FUEL SENDER CIRCUIT CO : Open circuit CC : Short circuit 1.DEF: Internal electronic fault 2.DEF: Voltage outside tolerance range

NOTES	**Conditions for applying the fault finding procedure to stored faults:** The fault is declared present when the ignition is switched on. Wait **2 minutes** to confirm the fault.

Manipulate the wiring harness between the fuel sender and the instrument panel until a change in fault status is produced. (Present ↔ Stored).
Look for possible damage to the harness, and check the **connection and condition** of the fuel sender unit and its connections.
Repair if necessary.

Check the **continuity and insulation** of the following connections:
Fuel sender unit **track A1** ⟶ **track 22 of the 30-track** instrument panel connector
Fuel sender unit **track B1** ⟶ **track 25 of the 30-track** instrument panel connector
Repair if necessary.

Measure the **resistance** between **tracks A1 and B1** of the fuel sender unit.
Replace the fuel sender unit if the **resistance** value is not: **350 Ω fuel tank in reserve**
10 Ω full tank

If the fault is still present, **contact Techline**.

AFTER REPAIR	Clear the computer memory. Carry out a road test and then recheck with the diagnostic tool.

GETtheMANUALS.org

DF009 PRESENT OR STORED	OIL PRESSURE SENSOR CIRCUIT 1.DEF: Signal incoherence

NOTES	**Conditions for applying the fault finding procedure to stored faults:** Switch on the ignition, start the engine (the speed should be above **500 rpm**); the status should be inactive if the indicator light is not lit.

Manipulate the wiring harness between the instrument panel and the oil level sensor in order to produce a change in fault status (Present ↔ Stored).
Look for possible damage to the harness, and check **the connection and condition** of the oil level sensor and its connections.
Repair if necessary.

Check **the condition and connection** of the instrument panel 30-track connector, bent tabs, oxidised, broken, etc.
Repair if necessary.

Check the **insulation** and **continuity** of the following connections:

Pressure switch, transparent connector, **track 1** ⟶ **track 18 on the 30-track** instrument panel connector

Pressure switch, grey connector, **track 2** ⟶ **track 18 on the 30-track** instrument panel connector

If the fault is still present, check the **R262 intermediate connector** on **track C5**.
Repair if necessary.

Check that the pressure switch is correctly fitted and check if there are any leaks (see **MR 353 or 402 Mechanical, 10A, Engine and peripherals**).

If the fault is still present, **contact Techline**.

AFTER REPAIR	Clear the computer memory. Carry out a road test followed by another check with the diagnostic tool.

GETtheMANUALS.org

DF016 PRESENT OR STORED	OIL LEVEL SENSOR CIRCUIT CO : Open circuit CC : Short circuit 1.DEF: Inconsistent current value 2.DEF: Internal electronic fault 3.DEF: Battery voltage out of range

NOTES	**Conditions for applying the fault finding procedure to stored faults:** The fault is declared present when the ignition is switched on. Wait **2 minutes** to confirm the fault.

Manipulate the wiring harness between the instrument panel and the oil level sensor in order to produce a change in fault status (Present ↔ Stored).
Look for possible damage to the harness, and check **the connection and condition** of the oil level sensor and its connections.
Repair if necessary.

Check **the condition and connection** of the instrument panel 30-track connector, bent tabs, oxidised, broken, etc.
Repair if necessary.

Check the **insulation and continuity** of the connections:
Oil level sensor **track 2** ⟶ **track 26** of the 30-track instrument panel connector
Oil level sensor **track 1** ⟶ **track 21** of the 30-track instrument panel connector
If the fault is still present, check the **R262 intermediate connector** on **tracks C6** and **C7**.
Repair if necessary.

Measure the resistance between the **tracks 3** and **4** of the oil level sensor.
Replace the oil level sensor if the **resistance** is not between **7** and **20 Ω**.

If the fault is still present, **contact Techline**.

AFTER REPAIR	Clear the computer memory. Carry out a road test and then recheck with the diagnostic tool.

GETtheMANUALS.org

DF018 PRESENT OR STORED	INSTRUMENT PANEL 1.DEF : EEPROM fault 2.DEF : Battery voltage too low

NOTES	**Special notes:** An EEPROM fault is declared when the instrument panel has detected an anomaly in the odometer control in EEPROM*. The mileage is no longer guaranteed to be correct. **Conditions for applying the fault finding procedure to stored faults:** The fault is declared present after the ignition is switched on if the battery voltage is below **5 V** or above **12 V**.

1.DEF	***NOTES***	None

If the fault is still present, contact Techline.

2.DEF	***NOTES***	None

Manipulate the wiring harness between the instrument panel and the battery until a change in fault status is produced (Present ↔ Stored).
Look for any damage to the wiring and check the **connection and condition** of the battery and its connections.
Repair if necessary.

Check **the condition and connection** of the instrument panel 30-track connector, bent tabs, oxidised, broken, etc.
Repair if necessary.

Check **the condition of the battery** and **the charge circuit**.
Check the **condition** of the vehicle **earths**.

Check for **+ 12 V** on **track 4 of the 30-track** instrument panel connector.
Repair if necessary.
With the ignition on, check for **+ 12 V** on **track 16 of the 30-track** instrument panel connector.
Repair if necessary.
Check for an **earth** on **track 24** of the **30-track** instrument panel connector.
Repair if necessary.

* EEPROM = Computer memory.

AFTER REPAIR	Clear the computer memory. Carry out a road test and then recheck with the diagnostic tool.

GETtheMANUALS.org

DF019 PRESENT OR STORED	BATTERY VOLTAGE 1.DEF: Voltage too weak 7 V 2.DEF: Feed voltage too high (between 16 and 18 volts) 3.DEF: Feed voltage too high (above 18 V) 4.DEF: Internal electronic fault

NOTES	**Special note:** If the battery voltage is greater than **18 V** due to a polarity inversion, check that the instrument panel is not damaged.

Manipulate the wiring harness between the instrument panel and the battery until a change in fault status is produced (Present ↔ Stored). Look for any damage to the wiring and check the **connection and condition** of the battery and its connections. Repair if necessary.
Check **the condition and connection** of the instrument panel 30-track connector, bent tabs, oxidised, broken, etc. Repair if necessary.
Check **the condition of the battery** and **the charge circuit**. Check the **condition** of the vehicle **earths**.
Check for **+ 12 V** on **track 4 of the 30-track** instrument panel connector. Repair if necessary. With the ignition on, check for **+ 12 V** on **track 16 of the 30-track** instrument panel connector. Repair if necessary. Check for an **earth** on **track 24** of the **30-track** instrument panel connector. Repair if necessary.
If the fault is still present, contact Techline.

AFTER REPAIR	Clear the computer memory. Carry out a road test followed by another check with the diagnostic tool.

GETtheMANUALS.org

DF020 PRESENT OR STORED	STEERING LOCK CIRCUIT CC.0 : Short circuit to earth

NOTES	**Conditions for applying the fault finding procedure to stored faults:** The fault is declared present after the ignition has been switched on.

Manipulate the wiring harness between the instrument panel and the electric steering lock in order to produce a change in fault status (Present ⇔ Stored).
Look for possible damage to the harness, and check the **condition and connection** of the electric steering column lock and its connections.
Repair if necessary.

Check the **insulation** and **continuity** of the connection:
Instrument panel, **30-track connector, track 7** ⟶ **track 5** of the electric steering column lock
Repair if necessary.

If the fault is still present, contact Techline.

AFTER REPAIR	Clear the computer memory. Carry out a road test and then recheck with the diagnostic tool.

GETtheMANUALS.org

NOTES	Only check the conformity after a **complete check** with the diagnostic tool. The values indicated in this conformity check are given as examples. **Application condition:** Engine **stopped, ignition on**.

MAIN COMPUTER STATUSES AND PARAMETERS

Order	Function	Parameter, Status checked or Action		Display and Notes	Fault finding
1	Power supply	**ET002:**	+ 12 V after ignition feed	**With the ignition on, the status should be PRESENT**	In the event of a fault, refer to the interpretation of status **ET002 + 12 V after ignition feed**.
2	Battery voltage	**PR110:**	Battery voltage	**8 V < PR110 < 16 V**	If there is a fault, consult the interpretation of fault **DF019 Battery voltage**.
3		**ET058:**	Battery charge	**OK**	In the event of a fault, refer to the interpretation of status **ET058 Battery charge**.
4	Vehicle speed	**ET008:**	Vehicle speed signal < 9 mph (15 km/h)	**YES**	In the event of a fault, refer to the interpretation of status **ET008 Vehicle speed signal < 9 mph (15 km/h)**.
5	Temperature	**ET056:**	Coolant temperature: no signal	**NO**	In the event of a fault consult the interpretation for status **ET056 Coolant temperature: no signal**.

GETtheMANUALS.org

NOTES	Only check the conformity after a **complete check** with the diagnostic tool. The values indicated in this conformity check are given as examples. **Application condition:** Engine **stopped, ignition on**.

TRIP COMPUTER

Order	Function	Parameter, Status checked or Action	Display and Notes	Fault finding
1	Radio	**ET030:** Trip computer scroll button	**DEPRESSED** **RELEASED**	In the event of a fault, consult the interpretation of status **ET030 Trip computer scroll button**.
2		**ET034:** Trip Computer reset button	**DEPRESSED** **RELEASED**	If the fault is still present, contact Techline.
3		**ET031:** Mute button	**DEPRESSED** **RELEASED**	In the event of a fault, refer to the interpretation of status **ET031 Mute button**.
4		**ET033:** Repeat button	**DEPRESSED** **RELEASED**	In the event of a fault, refer to the interpretation of status **ET033 Repeat button**.
5	Fuel	**PR003:** Fuel consumption.	**Indicates the fuel consumption.**	If there is a fault, consult the interpretation for fault **DF007 Fuel sender unit circuit**.
6		**PR004:** LPG fuel consumption	**Indicates the LPG fuel consumption.,**	
7		**PR112:** Fuel flow	**Indicates fuel flow.**	
8	Instrument panel	**AC011:** Symbol display	**This command allows the matrix information display to be viewed in three colours.**	If the fault is still present, contact Techline.
9		**AC015:** Voice synthesiser	**With the ignition on and engine stopped, the voice synthesiser emits a message.**	

GETtheMANUALS.org

NOTES	Only check the conformity after a **complete check** with the diagnostic tool. The values indicated in this conformity check are given as examples. **Application condition:** Engine **stopped, ignition on**.

DISPLAY

Order	Function	Parameter, Status checked or Action		Display and Notes	Fault finding
1	Vehicle speed	**ET008:**	Vehicle speed signal < 9 mph (15 km/h)	**YES**	In the event of a fault, refer to the interpretation of status **ET008 Vehicle speed signal < 9 mph (15 km/h)**.
2	Washer fluid	**ET014:**	minimum washer fluid level	**Indicates the screen washer fluid level.** **YES:** Level too low **NO:** Level sufficient	In the event of a fault consult the interpretation of status **ET014 Minimum washer fluid level**.
3	Central door locking	**ET016:**	Driver's door open	**YES:** Door open **NO:** Door closed	In the event of a fault, refer to the interpretation of status **ET016 Driver's door open**.
4		**ET018:**	Bonnet open	**YES:** Bonnet open **NO:** Bonnet closed	In the event of a fault, refer to the interpretation of status **ET018 Bonnet open**.
5	Brake fluid level light	**ET019:**	minimum brake fluid level	**Indicates the brake fluid level.** **YES:** Level too low **NO:** Level sufficient	In the event of a fault, consult the interpretation of status **ET019 Minimum brake fluid level**.
6	Heated seat	**ET055:**	Heated seat	**Turn on the heated seat function, the status should be ACTIVE.**	In the event of a fault, refer to the interpretation of status **ET055 Heated seat**.
7	Oil pressure	**ET096:**	Oil pressure contact	**CLOSED** **OPEN**	If the event of a fault, consult the interpretation for fault **DF009 Oil pressure sensor circuit**.

GETtheMANUALS.org

NOTES	Only check the conformity after a **complete check** with the diagnostic tool. The values indicated in this conformity check are given as examples. **Application condition:** Engine **stopped, ignition on**.

DISPLAY (continued 1)

Order	Function	Parameter, Status checked or Action		Display and Notes	Fault finding
8	Parking brake	**ET097:**	Parking brake	**Indicates parking brake position (APPLIED/RELEASE) except for automatic parking brakes; in which case the status is INACTIVE**	In the event of a fault, refer to the interpretation of status **ET097 Parking brake**.
9	Seat belt	**ET098:**	Driver's seat belt contact	**With the ignition on, trigger the driver's seat belt, the status should be OPEN.**	In the event of a fault, refer to the interpretation of status **ET098 Driver's seat belt contact**.
10		**ET156:**	Passenger seat belt contact	**With the ignition on, trigger the passenger seat belt, the status should be OPEN.**	In the event of a fault, perform fault finding on the airbag and pretensioner computer (see **38C, ABS**).
11	Exterior lighting	**ET157:**	Dipped headlights signal	**PRESENT**	In the event of a fault, perform fault finding on the UCH (see **87B, Passenger compartment connection unit**).
12		**ET158:**	Side lights signal		
13		**ET159:**	Front fog light signal		
14		**ET160:**	Rear fog light signal		
15	Instrument panel lighting	**ET107:**	Lighting dimmer wheel	**With the ignition on, dipped headlights lit, the brightness will vary, the status should be CONNECTED.**	In the event of a fault contact Techline.

GETtheMANUALS.org

NOTES	Only check the conformity after a **complete check** with the diagnostic tool. The values indicated in this conformity check are given as examples. **Application condition:** Engine **stopped, ignition on**.

DISPLAY (continued 2)

Order	Function	Parameter, Status checked or Action		Display and Notes	Fault finding
16		**AC009:**	Instrument panel warning lights	**The instrument panel warning lights are activated in several stages. The warning lights are lit one after another, then the command lights all the warning lights.**	If the fault is still present, contact Techline.
17		**AC008:**	Instrument panel needle gauges	**With the ignition switched on and the engine stopped, the needles should move.**	
18		**AC005:**	Display test	**With the ignition switched on and the engine stopped, all the displays on the instrument panel light up.**	
19		**AC010:**	Lighting	**Following activation of all the instrument panel warning lights, the brightness will vary between 25 %, 50 %, 75 % then 100 % of the maximum brightness for 4 seconds each time.**	
20		**AC004:**	Seat belt warning light	**Seat belt warning light lighting.**	
21		**AC003:**	Opening element indicator light	**Opening element indicator light lighting.**	
22	Buzzer	**AC006:**	Buzzer	**With the ignition on and engine off, the buzzer should sound.**	

GETtheMANUALS.org

NOTES	Only check the conformity after a **complete check** with the diagnostic tool. The values indicated in this conformity check are given as examples. **Application condition:** Engine **stopped, ignition on**.

GAUGES

Order	Function	Parameter, Status checked or Action	Display and Notes	Fault finding
1	Fuel	**ET110:** Fuel sender defect mode	**NO** **Warns of a fuel level fault**	In the event of a fault, apply the fault finding procedure **DF007 Fuel sender circuit**.
2		**PR002:** Fuel sender resistance	**PR002 empty = 5 Ω** **PR002 full = 350 Ω**	
3		**PR010:** Tank capacity	**Indicates the volume of fuel contained in the tank.** **0 < PR010 < 80 l**	In the event of a fault, check that configuration **LC006 Fuel tank capacity** has been performed. If the fault is still present, contact the Techline.
4	Oil level	**PR011:** Oil level sensor voltage	**Maximum oil level:** **≤ 190 mV** **Minimum oil level:** **≥ 440 mV**	If there is a fault, consult the interpretation for fault **DF016 Oil level sensor circuit**.

GETtheMANUALS.org

NOTES	Only check the conformity after a **complete check** with the diagnostic tool. The values indicated in this conformity check are given as examples. **Application condition:** Engine **stopped, ignition on**.

MILEOMETER

Order	Function	Parameter, Status checked or Action		Display and Notes	Fault finding
1	Oil change frequency	**PR005:**	Oil change frequency in km	**Indicates the oil change frequency in km.**	If the fault is still present, contact Techline.
2		**PR006:**	Oil change frequency in months	**Indicates the oil change frequency in months.**	
3	Oil service interval	**PR007:**	Oil service interval: current value in km	**Indicates the distance remaining to the oil service in km. (this value should be equal to or below the frequency). PR005 - PR009 = PR007**	
4		**PR008:**	Oil service interval: actual value in months	**Indicates the oil service interval in months. (this value should be equal to or below the frequency).**	
5	Odometer	**PR009:**	Odometer	**Indicates the counter value in km.**	

GETtheMANUALS.org

Tool status	Diagnostic tool title
ET002	+ 12 V after ignition feed
ET008	Vehicle speed signal < 9 mph (15 km/h)
ET014	Minimum washer fluid level
ET016	Driver's door open
ET018	Bonnet open
ET019	Minimum brake fluid level
ET030	Trip computer scroll button
ET031	Mute button
ET033	Repeat button
ET034	Trip Computer reset button
ET055	Heated seats
ET056	Coolant temperature: no signal
ET058	Battery charge
ET096	Oil pressure contact
ET097	Parking brake
ET098	Driver's seat belt contact
ET107	Lighting dimmer wheel
ET110	Fuel sender defect mode
ET156	Passenger seat belt contact
ET157	Dipped headlights signal
ET158	Side lights signal
ET159	Front fog light signal
ET160	Rear fog light signal

GETtheMANUALS.org

ET002	+ 12 V AFTER IGNITION FEED

NOTES	There must be no present or stored faults. Switch on the ignition, status **ET002** should be **PRESENT**.

Check instrument panel fuse **F11 (20A)** on the Passenger Compartment Fuse and Relay Board.
Check the passenger compartment fuse and relay box connectors.

Check **the insulation and continuity** of the wiring between:

Fuse and relay box, **green connector, track 1** → **Track B9, black connector,** passenger compartment fuse and relay box

Passenger compartment fuse and relay box, **black connector, track J5** → **Track 4** of the instrument panel **30-track connector**

Observe the Verlog diode.
Repair if necessary.

AFTER REPAIR	Carry out another fault finding check on the system. Deal with any other faults. Clear the stored faults.

GETtheMANUALS.org

ET008	VEHICLE SPEED SIGNAL < 9 MPH (15 KM/H)

NOTES	There must be no present or stored faults. Switch on the ignition and carry out a road test.

In the event of a fault, **carry out a fault finding procedure on the multiplex network** and the **ABS** (see **88B, Multiplex network** and **38C, ABS**).

AFTER REPAIR	Carry out another fault finding check on the system. Deal with any other faults. Clear the stored faults.

GETtheMANUALS.org

ET014	SCREEN WASH LEVEL MINIMUM

NOTES	There must be no present or stored faults. Switch on the ignition, fill the washer fluid reservoir: status **ET014** should be **YES**.

Check the instrument panel connector and the washer fluid reservoir connector.
Check that the **earth** is properly connected to the reservoir on **track 2**. Repair if necessary.
Check **the insulation and continuity** of the connection: Instrument panel, **30-track connector, track 13** ⟶ **track 1** of the washer fluid reservoir If the fault is still present, check **intermediate connector R265** on **track C7**. Repair if necessary.
Check that the reservoir's two tracks are not short-circuiting. If necessary, replace the reservoir.

IMPORTANT
The warning message is only displayed for 30 seconds on activation of the after ignition feed if the fault is already present, otherwise 8 seconds in fault finding.
The fault is confirmed after 30 seconds.

AFTER REPAIR	Carry out another fault finding check on the system. Deal with any other faults. Clear the stored faults.

GETtheMANUALS.org

ET016	DRIVER'S DOOR OPEN

NOTES	There must be no present or stored faults. Switch on the ignition, open the door, status **ET016** should be **YES**.

Check the driver's door wiring harness connector.
Check the **earth** on **track D** of the lock.
IMPORTANT
There are several locks (see **Wiring Diagram Technical Note, Velsatis**).

Check **the continuity and insulation** between:
Instrument panel, **30-track connector, track 1** ⟶ **Track C** of the driver's door locking function
If the fault is still present, check **intermediate connector R153** on **track B10**.
Repair if necessary.

Check that the lock is working and in particular that it engages properly in the striker.

AFTER REPAIR	Carry out another fault finding check on the system. Deal with any other faults. Clear the stored faults.

GETtheMANUALS.org

ET018	BONNET OPEN

NOTES	There must be no present or stored faults. Switch on the ignition, open the bonnet, status **ET018** should be **YES**.

Check the instrument panel connector and the bonnet connector. Check that the bonnet switch is firmly attached to the bodywork and that it operates properly.
Check **the insulation and continuity** of the wiring between: Instrument panel **30-track connector, track 19** ⟶ **Track 2** of the bonnet switch Repair if necessary.
Check **the insulation and continuity** of the wiring between: Bonnet switch **track 1** ⟶ Vehicle earth If the fault is still present, check **intermediate connector R265** on **track B1**. Repair if necessary.

AFTER REPAIR	Carry out another fault finding check on the system. Deal with any other faults. Clear the stored faults.

GETtheMANUALS.org

ET019	MINIMUM BRAKE FLUID LEVEL

NOTES	There must be no present or stored faults. Switch on the ignition, check the brake fluid level in the reservoir.

Check the instrument panel connector and the reservoir connector.
Check **the insulation and continuity** of the wiring between: Instrument panel **30-track connector, track 30** ⟶ **track 2** of the brake fluid reservoir Repair if necessary.
Check that the earth is properly connected to **track 1** of the brake fluid reservoir level sensor. If necessary, replace the reservoir.

AFTER REPAIR	Carry out another fault finding check on the system. Deal with any other faults. Clear the stored faults.

GETtheMANUALS.org

ET030	TRIP COMPUTER SCROLL BUTTON

NOTES	There must be no present or stored faults. Switch on the ignition, press the button: status **ET030** should be **PRESSED**.

Check the instrument panel connector and the wiper stalk connector.
Check **the insulation and continuity** of the wiring between: Instrument panel, **15-track connector, track 6** ⟶ **track B7** of the windscreen wiper stalk Repair if necessary.
Check that the **earth** on **track B5** is properly connected to the stalk. If necessary, replace the stalk.

AFTER REPAIR	Carry out another fault finding check on the system. Deal with any other faults. Clear the stored faults.

GETtheMANUALS.org

ET031	MUTE BUTTON

NOTES	There must be no present or stored faults. The vehicle must be equipped with a voice synthesiser. Switch on the ignition, press the button: status **ET031** should be **PRESSED**.

Manipulate the wiring harness between the instrument panel connector and the voice synthesis control connector, to produce a change in fault status.
Look for any damage to the wiring harness, check the **connection and condition** of the voice synthesis computer and its connections.
Repair if necessary.

Carry out a fault finding procedure on the multiplex network (see **88B Multiplex network**).

Check **the insulation and continuity** of the wiring between:
Instrument panel, **15-track connector, track 2** ⟶ **track A3** of the voice synthesis control
Repair if necessary.

Check that the **earth** is properly connected to control **track A2**.
If necessary, change the set of buttons.

AFTER REPAIR	Carry out another fault finding check on the system. Deal with any other faults. Clear the stored faults.

GETtheMANUALS.org

ET033	REPEAT BUTTON

NOTES	There must be no present or stored faults. The vehicle must be equipped with a voice synthesiser. Switch on the ignition, press the button: status **ET033** should be **PRESSED**.

Manipulate the wiring harness between the instrument panel connector and the voice synthesis control connector, to produce a change in fault status.
Look for any damage to the wiring harness, check the **connection and condition** of the voice synthesis computer and its connections.
Repair if necessary.

Carry out a fault finding procedure on the multiplex network (see **88B Multiplex network**).

Check **the insulation and continuity** of the wiring between:
Instrument panel, **30-track connector, track 28** ⟶ **track A1** of the voice synthesis control
Repair if necessary.

Check that the earth is properly connected to control on **track A2**.
If necessary, change the set of buttons.

AFTER REPAIR	Carry out another fault finding check on the system. Deal with any other faults. Clear the stored faults.

GETtheMANUALS.org

ET055	HEATED SEAT

NOTES	There must be no present or stored faults. Switch on the ignition, press the heated seat button: status **ET031** should be **ACTIVE**.

Check the instrument panel connection and the connectors.
Check **the continuity and insulation** between: Instrument panel, **30-track connector, track 15** ⟶ **Track A1** of the heated seat switches (driver's and passenger) If the fault is still present, check the **R334** and **R335 intermediate connectors** on **track 16**. Repair if necessary.
Check that the seats are properly installed and that the automatic connectors (**R334** and **R335**) between the seat wiring harness and the passenger compartment wiring harness are correctly locked.
Also check that the **earth** on **track B1** is connected to these switches.

AFTER REPAIR	Carry out another fault finding check on the system. Deal with any other faults. Clear the stored faults.

GETtheMANUALS.org

ET056	COOLANT TEMPERATURE SIGNAL ABSENT

NOTES	There must be no present or stored faults. Switch on the ignition, start the engine.

Perform fault finding on the **multiplex network** and the **injection** (see **88B, Multiplex network** and **17B, Petrol injection** or **13B, Diesel injection**).

AFTER REPAIR	Carry out another fault finding check on the system. Deal with any other faults. Clear the stored faults.

GETtheMANUALS.org

ET058	BATTERY CHARGE

NOTES	There must be no present or stored faults. Switch on the ignition, start the engine (the speed should be above **1000 rpm**); status **ET058** should be **OK** if the warning light is not lit. Check that the speed is above **400 rpm** for more than **10 seconds** before registering a possible fault.

Manipulate the wiring harness between the instrument panel connector and the alternator connector, in order to produce a change in status.
Look for any harness damage, and check **the condition and connection** of the alternator and its connections.
Repair if necessary.

Check the alternator installation and mountings.
Check that the alternator is recharging the battery.

Check **the insulation and continuity** of the wiring between:
Instrument panel, **30-track connector, track 14** ⟶ **track 1** of the alternator black connector
If the fault is still present, check **intermediate connector R262** on **track C4**.
Repair if necessary.

If status **ET058** does not change to "**INACTIVE**", check the operation signals of the alternator (see **MR 355 or 402 Mechanical, 16A, Starting - Charging**).

AFTER REPAIR	Carry out another fault finding check on the system. Deal with any other faults. Clear the stored faults.

GETtheMANUALS.org

ET097	PARKING BRAKE

NOTES	There must be no present or stored faults. Switch on the ignition, apply the brake: status **ET097** should be **APPLIED**.
	Special Note Check whether the vehicle is fitted with an automatic parking brake by referring to configuration **LC057 Automatic parking brake**. If it does have this function, status **ET097** is **RELEASED**.

Manipulate the wiring harness between the instrument panel connector and the handbrake connector in order to produce a change in status.
Look for possible damage to the harness, and check the **connection and condition** of the handbrake and its connections.
Repair if necessary.

Check that the handbrake is firmly attached to the bodywork and that it operates correctly.

Check **the insulation and continuity** of the wiring between:
Instrument panel, **30-track connector, track 29** ⟶ **Track 1** of the handbrake
Repair if necessary.

AFTER REPAIR	Carry out another fault finding check on the system. Deal with any other faults. Clear the stored faults.

GETtheMANUALS.org

ET098	DRIVER'S SEAT BELT CONTACT

NOTES	There must be no present or stored faults. Switch on the ignition, fasten the seat belt: status **ET098** should be **OPEN**.

Check the instrument panel connector and the seat belt anchorage stirrup connector.
Manipulate the wiring harness between the instrument panel connector and the stirrup/seat belt anchorage, to produce a change in fault status.
Look for possible damage to the harness, and check **the connection and the condition** of the stirrup/seat belt anchorage and its connections.
Repair if necessary.

Check **the insulation and continuity** of the wiring between:
Instrument panel, **30-track connector, track 6** ⟶ **track A2** of the driver's seat belt clamp
If the fault is still present, check the **R335 intermediate connector** on **track 2**.
Repair if necessary.

Check that there is an earth connection on the seat belt anchorage/stirrup (**track A1**).
If necessary, change the seat belt anchorage stirrup.

AFTER REPAIR	Carry out another fault finding check on the system. Deal with any other faults. Clear the stored faults.

GETtheMANUALS.org

ET110	DRIVER'S SEAT BELT CONTACT

NOTES	If in short circuit for over 100 seconds, the needle fluctuates between full and half-full. If in open circuit for over 100 seconds, the needle fluctuates between half-full and 0.

Check the **insulation and continuity** of the connections:
Instrument panel, **30-track connector, track 22** ⟶ track A1 of the fuel sender
Instrument panel, **30-track connector, track 25** ⟶ track B1 of the fuel sender
Repair if necessary.

AFTER REPAIR	Carry out another fault finding check on the system. Deal with any other faults. Clear the stored faults.

GETtheMANUALS.org

Tool parameter	Diagnostic tool title
PR002	Fuel sender unit resistance
PR003	Fuel consumption
PR004	LPG fuel consumption
PR005	Oil change frequency in km
PR006	Oil change frequency in months
PR007	Distance to next oil service: current value in km
PR008	Time to next oil service: current value in months
PR009	Odometer
PR010	Fuel tank capacity
PR011	Oil level sensor voltage
PR110	Battery voltage
PR112	Fuel flow

GETtheMANUALS.org

PR110	BATTERY VOLTAGE

NOTES	None

Check that there are no faults.
If the voltage is at minimum:
Check the battery and the charge circuit.
If the voltage is at maximum:
Check that the charging voltage is correct with and without electrical consumers switched on.

Check the **insulation, continuity and the absence of interference resistance** on the following connection:
Instrument panel, **30-track connector, track 04** ⟶ **+ battery feed**
Repair if necessary.

GETtheMANUALS.org

PR112	FUEL FLOW

NOTES	With the engine idling, the flow should be around **0**. Vary the engine speed to confirm the increase in flow.
	Note: A fuel flow signal fault causes an inconsistency in trip computer operation.

Perform a **multiplex network** and **injection test** (see **88B, Multiplex network** and **17B, Petrol injection** or **13B, Diesel injection**).

GETtheMANUALS.org

Tool commands	Diagnostic tool title
SC001	Oil service interval
RZ001	Fault memory
AC003	Opening element indicator light
AC004	Seat belt warning light
AC005	Display test
AC006	Audible Alert (Buzzer)
AC008	Instrument panel needle gauges
AC009	Instrument panel warning lights
AC010	Lighting
AC011	Symbol display
AC015	Voice synthesiser
VP002	Enter VIN
VP006	Oil change frequency in km
VP007	Oil change frequency in months
VP008	Distance to next oil service: current value in km
VP009	Time to next oil service: current value in months
VP010	Mileometer updating
VP011	Fuel tank sender unit calibration

GETtheMANUALS.org

CLEARING

RZ001: Fault memory
This command is used for clearing the computer's stored faults.

ACTIVATION

AC003: Opening element indicator light
This command enables the opening element indicator lights to be tested.

Switch on the ignition and run command **AC003**.
The buzzer should be heard.

AC004: Seatbelt warning light
This command enables the seat belt warning light to be tested.

Switch on the ignition and run command **AC004**.
The buzzer should be heard.

AC005: Display test
This command enables the entire display assembly to be tested.

Switch on the ignition and run command **AC005**.
All the display elements on the instrument panel should light up.

AC006: Audible warning (Buzzer)
This command is for testing the buzzer function.

Switch on the ignition and run command **AC006**.
The buzzer should be heard.

AC008: Instrument panel needles
This command enables the needles to be tested (rev counter, speedometer, oil and coolant temperature).

Switch on the ignition and run command **AC008**.
The buzzer should be heard.

AC009: Instrument panel indicator/ warning lights
This command enables the all the instrument panel warning lights to be tested.

The warning lights come on and then go out:
– make sure that lighting of one warning light does not cause the lighting, even partially, of another warning light.
The indicator lights are all lit:
– make that sure the lighting is correct.

GETtheMANUALS.org

ACTUATION (continued)

AC010: Lighting
This command enables the instrument panel lighting to be tested.

Switch on the ignition and run command **AC010**.
The instrument panel lights up; change the lighting brightness.

AC011: Symbol display
This command enables the matrix display to be tested.

Switch on the ignition and run command **AC011**.
All the matrix display pixels should be red.

AC015: Voice synthesiser
This command enables the voice synthesiser to be tested.

Switch on the ignition and run command **AC015**.
A voice synthesis message should be heard.

GETtheMANUALS.org

NOTES	**Only consult the customer complaints after a complete check using the diagnostic tool.** **Run fault finding on the multiplex network.** **Run fault finding on the instrument panel.** **In the case of a top of the range instrument panel (with central display), run fault finding on the function.**

ONE OR MORE OF THE NEEDLES DOES/DO NOT MOVE	**ALP 1**
ONE OR MORE OF THE NEEDLES DOES/DO NOT MOVE IN ACCORDANCE WITH THE SCALE DIVISIONS	**ALP 1**
THE DISPLAY ON THE TRIP COMPUTER OR CENTRAL DISPLAY IS INCOMPLETE OR BLURRED	**ALP 1**
SOME OF THE TRIP COMPUTER DATA IS INCORRECT	**ALP 1**
SOME OF THE TRIP COMPUTER DATA HAS BEEN REPLACED WITH DASHES	**ALP 1**
THE FUEL SENDER (APART FROM LPG) DISPLAYS AN IMPLAUSIBLE VALUE	**ALP 1**
THE OIL GAUGE DISPLAYS AN INCORRECT READING	**ALP 1**
THE TRIP COMPUTER DOES NOT WORK WHEN THE BUTTON IS PRESSED	**ALP 2**
THE WARNING LIGHTS DO NOT COME ON OR MESSAGES ARE NOT DISPLAYED WHEN THERE IS A FAULT	**ALP 3**
THE WARNING LIGHTS COME ON WHEN THERE IS NO FAULT	**ALP 3**
THE VOICE SYNTHESISER DOES NOT WORK	**ALP 4**
THE RADIO DOES NOT CUT OUT WHEN THE VOICE SYNTHESISER IS DELIVERING A MESSAGE	**ALP 5**
THE VOICE MESSAGES CANNOT BE UNDERSTOOD (DIFFERENT LANGUAGE, ETC.)	**ALP 6**

GETtheMANUALS.org

MESSAGES ARE ISSUED WHEN THEY SHOULD NOT BE	ALP 7
THE INSTRUMENT PANEL BACKLIGHTING DOES NOT WORK	ALP 8
THE INSTRUMENT PANEL DOES NOT LIGHT UP WHEN THE SIDE LIGHTS ARE ON	ALP 8
INSTRUMENT PANEL SELF-TEST PROCEDURE	PRO 1

GETtheMANUALS.org

ALP 1	**One or more of the needles does/do not move** **One or more of the needles does/do not move in accordance with the scale divisions** **The display on the on trip computer or central display is incomplete or blurred** **Some of the trip computer data is incorrect** **Some of the trip computer data has been replaced with dashes** **The fuel gauge (apart from LPG) displays an implausible value** **The oil gauge displays an incorrect measurement**

NOTES	None.

Run the instrument panel self-test procedure (**PRO 1**).

AFTER REPAIR	If an instrument panel has been replaced: Remember to run a self-test and clear the faults. Remember to configure the instrument panel.

GETtheMANUALS.org

ALP 2	The trip computer does not work when the button is pressed

NOTES	Carry out a fault finding procedure on the multiplex network (see **88B Multiplex network**). Switch on the ignition.

Run the instrument panel self-test procedure (**PRO 1**).
Check the **insulation and continuity** of the connection between: Instrument panel, **15-track connector, track 6** ⟶ **track B7** of the windscreen wiper stalk Repair if necessary.
Check the **earth** on **track B5** of the wiper stalk connector.
Check that the voltage on **track 6** is zero when the button is pressed. If necessary, repair the wiring or replace the windscreen wiper control.
Replace the instrument panel.

AFTER REPAIR	If an instrument panel has been replaced: Remember to run a self-test and clear the faults. Remember to configure the instrument panel.

GETtheMANUALS.org

ALP 3	The warning lights do not come on or messages are not displayed when there is a fault The warning lights come on although there is no fault

NOTES	Carry out a fault finding procedure on the multiplex network (see **88B Multiplex network**). Carry out a fault finding procedure on the system that controls the warning light / message. Switch on the ignition.

List of warning/indicator lights lit up by a wire connection and not via the multiplex network:
- brake fluid fault,
- dipped headlights on,
- main beam headlights on,
- front fog lights on,
- rear fog lights on,
- direction indicators,
- heated seat indicator light,
- immobiliser warning light,
- parking brake,
- driver's seat belt.

If these warning/indicator lights do not come on or come on when they should not:
- check the continuity of the wiring between the warning/indicator light control (sensor, lighting stalk, alternator, etc.) and the instrument panel,
- check that the control system is working properly, that there is a feed to it and that there are no short-circuits on the connection.

The UCH detects if there is a bulb failure and transmits the bulb status on the multiplex network.

Replace the instrument panel.

AFTER REPAIR	If an instrument panel has been replaced: Remember to run a self-test and clear the faults. Remember to configure the instrument panel.

GETtheMANUALS.org

ALP 4	Voice synthesiser does not work

NOTES	Switch on the ignition. Press the repeat button, check if a message is issued. Carry out a fault finding procedure on the multiplex network, in particular check that the network linking the instrument panel to the voice synthesiser is correct). Carry out fault finding on the instrument panel. Check the (language) configurations. Check that the presses on the repeat and mute buttons have been detected.

Check the feed (+ battery feed, earth and + ignition feed) to the instrument panel and the voice synthesiser.

If the radio does not mute, check the multiplex network.
Switch off the ignition, disconnect and reconnect the battery. Switch the ignition back on so that the instrument panel is reconfigured correctly.

Check the **continuity and insulation** of the following connections:
Voice synthesiser **track 14** ⟶ **track A1** of the speaker
Voice synthesiser **track 15** ⟶ **track A2** of the speaker
Check the speaker.
Repair if necessary.

Replace the voice synthesiser computer.
If the fault persists, replace the instrument panel.

AFTER REPAIR	If an instrument panel has been replaced: Remember to run a self-test and clear the faults. Remember to configure the instrument panel.

GETtheMANUALS.org

ALP 5	**The radio does not cut out when the voice synthesiser is issuing a message**

NOTES	Check that the radio is working correctly. Switch on the ignition.

Check **the continuity and insulation** of the following connection:
Voice synthesiser **track 10** ⟶ **Track 3, black connector** for the radio
Repair if necessary.

Disconnect the voice synthesiser.
Connect **track 10** of the connector to earth.
If the radio mutes, replace the voice synthesiser; if not, replace the radio.

AFTER REPAIR	If an instrument panel has been replaced: Remember to run a self-test and clear the faults. Remember to configure the instrument panel.

GETtheMANUALS.org

ALP 6	The voice synthesiser messages are inconsistent (different language...)

NOTES	Carry out a fault finding procedure on the multiplex network (see **88B Multiplex network**). Carry out fault finding on the instrument panel. Carry out a fault finding procedure on the systems that the messages refer to. Switch on the ignition.

Replace the voice synthesiser computer.
If the fault is still present, replace the instrument panel.

AFTER REPAIR	If an instrument panel has been replaced: Remember to run a self-test and clear the faults. Remember to configure the instrument panel.

GETtheMANUALS.org

ALP 7	Messages are issued when they should not be

NOTES	Carry out a fault finding procedure on the multiplex network (see **88B Multiplex network**). Carry out a fault finding procedure on the system that the message refers to.

Replace the instrument panel.
If the fault is still present, replace the voice synthesiser.

AFTER REPAIR	If an instrument panel has been replaced: Remember to run a self-test and clear the faults. Remember to configure the instrument panel.

GETtheMANUALS.org

ALP 8	**The lighting dimmer on the instrument panel does not work** **The panel does not light up when the side lights are on**

NOTES	Switch on the ignition. Switch on the side lights. Carry out a fault finding procedure on the instrument panel (check that the side lights are active).

Check that the voltage on **track 27 of the 30-track** instrument panel connector is **12 V** when the side lights are switched.

Check **the continuity and insulation** of the connections between:

Instrument panel, **15-track connector, track 5** ⟶ **track 2** of the dimmer

Dimmer **track 3** ⟶ Earth

Repair if necessary.

Check that the resistance of the dimmer varies between **0** and **1000 Ω** when the wheel is moved.
If not, check that the climate control varies and refer to the fault finding procedure for the climate control (see **62B, Regulated air conditioning**).

AFTER REPAIR	If an instrument panel has been replaced: Remember to run a self-test and clear the faults. Remember to configure the instrument panel.

GETtheMANUALS.org

PRO 1	Instrument panel self-test procedure

NOTES	There must be no present or stored faults. The warning lights run by the instrument panel should be lit. Press the button of the trip computer (trip computer scroll button on the windscreen wiper stalk). Holding the button down, switch on the ignition (card inserted into the reader up to the stop). As soon as the needles begin to move, the test mode runs for **5 minutes**. Release the button. To skip from one screen to another on the trip computer, briefly press the trip computer scroll button again. Press the km reset button to exit from the mode and **clear the faults**.

Check that the rev counter, speedometer, coolant temperature gauge and fuel level gauge needles are moving properly and following all the scale divisions. If not, replace the instrument panel.
Check that all the digits on the trip computer are lit up. If not, replace the instrument panel.
Each time the Trip computer scroll button is pressed, the image on the central display changes. Replace the instrument panel if some images are unclear.

AFTER REPAIR	If an instrument panel has been replaced: Remember to run a self-test and clear the faults. Remember to configure the instrument panel.

GETtheMANUALS.org

VEL SATIS

8 Electrical equipment

83A INSTRUMENT PANEL

Vdiag No.: 11

Fault finding - Introduction	83A - 1
Fault finding - System operation	83A - 8
Fault finding - Allocation of instrument panel tracks	83A - 11
Fault finding - Replacement of components	83A - 13
Fault finding - Configurations and programming	83A - 14
Fault finding - Fault summary table	83A - 20
Fault finding - Interpretation of faults	83A - 21
Fault finding - Conformity check	83A - 27
Fault finding - Status summary table	83A - 34
Fault finding - Interpretation of statuses	83A - 35
Fault finding - Parameter summary table	83A - 50
Fault finding - Interpretation of parameters	83A - 51
Fault finding - Command summary table	83A - 53
Fault finding - Interpretation of commands	83A - 54
Fault finding - Customer complaints	83A - 56
Diagnostic - Fault finding chart	83A - 58

FEBRUARY 2006 **EDITION ANGLAISE**

"The repair procedures given by the manufacturer in this document are based on the technical specifications current when it was prepared.

The methods may be modified as a result of changes introduced by the manufacturer in the production of the various component units and accessories from which his vehicles are constructed."

All rights reserved by Renault s.a.s.

Copying or translating, in part or in full, of this document or use of the service part reference numbering system is forbidden without the prior written authority of Renault s.a.s.

© Renault s.a.s. 2006

INSTRUMENT PANEL
Fault finding - Introduction

GETtheMANUALS.org

1. SCOPE OF THIS DOCUMENT

This document presents the fault finding procedure applicable to all computers with the following specifications:

Vehicle(s): **VEL SATIS** *Function concerned:* **Instrument panel**	*Name of computer:* **Instrument panel** *Vdiag No.:* **11**

2. PREREQUISITES FOR FAULT FINDING

Documentation type

Fault finding procedures (this manual):
– Assisted fault finding (integrated into the diagnostic tool), Dialogys.
Wiring Diagrams:
– Visu-Schéma (CD-ROM), paper version.

Type of diagnostic tools

CLIP + CAN probe

Special tooling required

Special tooling required	
	Multimeter
Elé. 1681	Universal bornier

3. RECAP

Procedure

In order to save energy, the Laguna II Phase 2 UCH cuts off the + after ignition feed after 3 minutes.

To perform fault finding on a computer, it is possible to force the + after ignition feed for 1 hour by applying the following procedure:
– Press the card unlocking button,
– insert the card in the reader,
– if the ignition is switched on, press the Start button (interruption of timed + after ignition feed),
– press and hold the Start button for over 5 seconds until the engine immobiliser warning light starts to flash rapidly (4 Hz).

This forced + after ignition feed mode remains active for 1 hour.

Pressing the Start button or removing the card from the reader cuts off the forced + after ignition feed but does not cut off the timed forced + after ignition feed mode. As long as one hour has not elapsed the + after ignition feed function restarts the forced + after ignition feed for the remaining time.

GETtheMANUALS.org

Faults

Faults are declared as either present or stored (depending on whether they appeared in a certain context and have disappeared since, or whether they remain present but have not been diagnosed within the current context).

The **present** or **stored** status of faults should be taken into consideration when the diagnostic tool is used following the + after ignition supply being switched on (without acting on the system components).

For a **present fault**, apply the procedure described in the **Interpretation of faults** section.

For a **stored fault**, note the faults displayed and apply the instructions in the **Notes** section.

If the fault is **confirmed** when the instructions in the Notes section are applied, the fault is present. Deal with the fault

If the fault is **not confirmed**, check:
- the electrical lines which correspond to the fault,
- the connectors on these lines (corrosion, bent pins, etc.),
- the resistance of the component detected as faulty,
- the condition of the wires (melted or split insulation, wear).

Conformity check

The aim of the conformity check is to check data that does not produce a fault display on the diagnostic tool when it is inconsistent. Therefore, this stage is used to:
- carry out fault finding on faults that do not have a fault display, and which may correspond to a customer complaint,
- check that the system is operating correctly and that there is no risk of a fault recurring after repair.

This section provides the fault finding procedures for statuses and parameters and the conditions for testing them.

If a status is not behaving normally or a parameter is outside the permitted tolerance values, consult the corresponding fault finding page.

Customer complaints - Fault finding chart

If the test with the diagnostic tool is OK but the customer complaint is still present, the fault should be treated by **Customer complaints**.

A summary of the general procedure is provided in the form of a flow chart on the following page

GETtheMANUALS.org

4. FAULT FINDING PROCEDURE

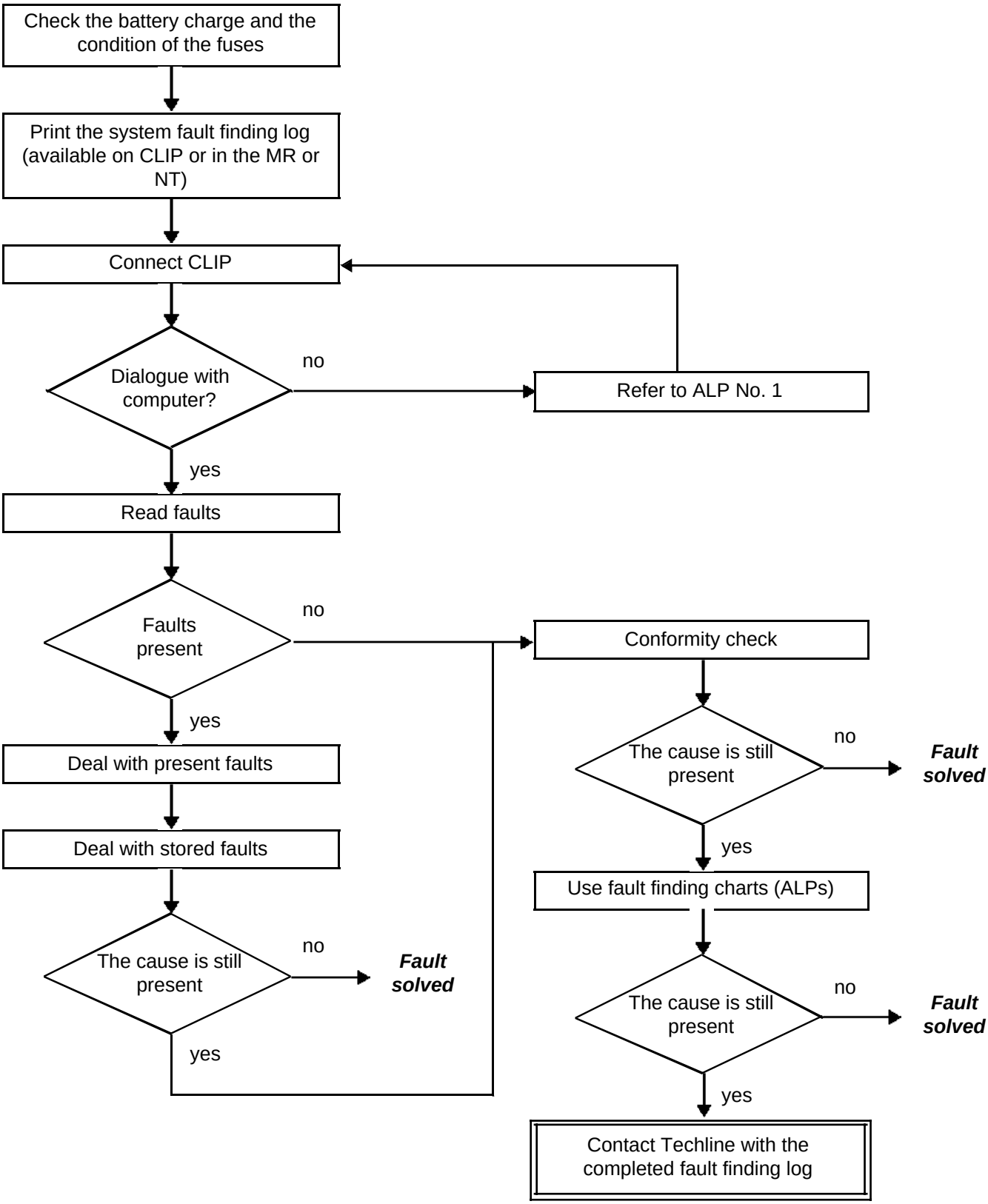

GETtheMANUALS.org

4. FAULT FINDING PROCEDURE (continued)

Wiring check

Fault finding problems

Disconnecting the connectors and/or manipulating the wiring harness may temporarily remove the cause of a fault.
Electrical measurements of voltage, resistance and insulation are generally correct, especially if the fault is not present when the analysis is made (stored fault).

Visual inspection

Look for damage under the bonnet and in the passenger compartment.
Carefully check the fuses, insulators and wiring harness routing.
Look for signs of oxidation.

Tactile inspection

While manipulating the wiring harness, use the diagnostic tool to note any change in fault status from stored to present.
Check that the connectors are properly locked.
Apply light pressure to the connectors.
Twist the wiring harness.
If there is a change in status, try to locate the source of the fault.

Inspection of each component

Disconnect the connectors and check the appearance of the clips and tabs, as well as their crimping (no crimping on the insulating section).
Make sure that the clips and tabs are properly locked in the sockets.
Make sure that no clips or tabs have been dislodged during connection.
Check the clip contact pressure using an appropriate model of tab.

Resistance check

Check the continuity of entire lines, then section by section.
Look for a short circuit to earth, to **+ 12 V** or to another wire.

If a fault is detected, repair or replace the wiring harness.

GETtheMANUALS.org

5. FAULT FINDING LOG

IMPORTANT!

IMPORTANT
Any fault on a complex system requires thorough fault finding with the appropriate tools. The FAULT FINDING LOG, which should be completed during the fault finding procedure, ensures a record is kept of the procedure carried out. It is an essential document when consulting the manufacturer.

IT IS THEREFORE MANDATORY TO FILL OUT A FAULT FINDING LOG FOR EACH FAULT FINDING PROCEDURE.

You will always be asked for this sheet:
- when requesting technical assistance from the Techline.
- for approval requests when replacing parts for which approval is obligatory.
- to be attached to monitored parts for which reimbursement is requested. The log is needed for warranty reimbursement, and enables better analysis of the parts removed.

6. SAFETY GUIDELINES

All work on components requires the observation of safety rules to prevent damage or injury:
- Check that the battery is properly charged to avoid damaging the computers in the event of a low load,
- Do not smoke,
- Use the appropriate tools.

GETtheMANUALS.org

FAULT FINDING LOG

System: Instrument panel

List of monitored parts: ***Computer***

Administrative identification

Date	2 0
Log completed by	
VIN	
Engine	
Diagnostic tool	CLIP
Update version	

Customer complaint

	1188	Faulty fuel level display		1156	Faulty coolant temperature display		1187	Digital display: faulty text/image
	1185	Faulty speedometer		1157	Warning lights fail to come on			
	1186	Faulty tachometer		1190	Faulty trip computer displays			

Other Your comments

Conditions under which the customer complaint occurs

	011	When the ignition is switched on		005	While driving		004	Intermittently
	009	Sudden fault		010	Gradual deterioration			

Other Your comments

Documentation used for fault finding

Fault finding procedure used	
Type of diagnostic manual:	Workshop Repair Manual ❑ Technical Note ❑ Assisted fault finding ❑
Fault finding manual no:	
Wiring diagram used	
Wiring Diagram Technical Note No:	
Other documentation	
Title and/or part number:	

RENAULT

FD 10
Fault finding log

FAULT FINDING LOG

System: Instrument panel

GETtheMANUALS.org

● Identification of computer and system parts exchanged

Part 1 part no.	
Part 2 part no.	
Part 3 part no.	
Part 4 part no.	
Part 5 part no.	

To be read with the diagnostic tool (Identification screen):

Computer part no.	
Supplier no.	
Program no.	
Software version	
Calibration number	
VDIAG	

● Faults found with the diagnostic tool

Fault no.	Present	Stored	Fault name	Specification

● Conditions under which fault occurs

Status or parameter no.	Parameter name	Value	Unit

● System-specific information

Description:

● Additional information

What factors led you to replace the computer? What other parts were replaced?	
Other defective functions?	
Your comments:	

RENAULT

FD 10
Fault finding log

GETtheMANUALS.org

1. Instrument panel functions:

– Features on petrol versions:
  - gas (LPG) indicator light,
  - rev counter up to **7125 rpm**.

– Features on diesel versions:
  - Exhaust particle filter indicator light,
  - rev counter up to **5000 rpm**.

– Needle gauge displays:
  - vehicle speed,
  - rev counter,
  - fuel level (petrol, diesel or gas),
  - engine coolant temperature.

– LCD displays:
  - mileometer and trip mileometer: ABS/ESP signal via the CAN,
  - oil level,
  - Trip Computer:
    - fuel consumed (petrol or diesel),
    - average consumption (petrol or diesel),
    - instantaneous consumption (petrol or diesel),
    - fuel range (petrol or diesel),
    - gas consumed,
    - average gas consumption,
    - fuel range,
    - distance travelled,
    - average speed,
    - mileage before oil change.

– Display on a single-colour dot matrix display informing the driver of the operating status of the vehicle using a system of colours:
  – white: status message (cruise control, keyless vehicle, etc.),
  – amber: hazard warning (tyre pressure monitor sensor not operational, etc.),
  – red: danger warning (coolant temperature, etc.).

– The information display is used for the following functions:
  - keyless vehicle,
  - tyre pressure monitor,
  - opening element statuses,
  - Automatic transmission indicator (option),
  - etc. (approximately 70 messages per language - 4 lines of 13 characters).

Notes
It is possible to enter instrument panel **self-test mode.** To do this, it is necessary to **switch on the ignition** while pressing the **trip computer scroll button** on the end of the wiper stalk.

GETtheMANUALS.org

– Management of a multifunction buzzer:
  The audible alert is used for the following functions:
  - indicating the operation of the direction indicator,
  - indicating that the lights have been left on accidentally,
  - indicating to the driver the activation/deactivation of automatic locking when driving,
  - indicating the failure of the childproof lock system,
  - indicating that the driver's position is stored,
  - indicating that the parking brake is not applied,
  - indicating that the driver's or passenger's seat belts are not fastened when driving,
  - signalling the start of the display of all the level 1 warnings (associated with the STOP warning light):
    – severe injection failure,
    – brake circuit or Electronic Braking Distribution fault,
    – battery charge circuit fault,
    – oil pressure fault,
    – engine coolant temperature warning,
    – immobiliser system fault,
    – lock fault,
    – parking brake fault,
  - indicating a first level tyre pressure monitor fault: major air leak or puncture,
  - low fuel warning,
  - indicating that a door or the tailgate is not correctly closed,
  - indicating that the handbrake is applied while the vehicle is being driven,
  - indicating a request to manage the cruise control,
  - indicating activation or deactivation of the cruise control,
  - indicating that a speed has been exceeded, for Arabian versions, where an overspeed warning is legally required.

  The audible alert is operational as soon as the instrument panel is started.
  The following buzzers can sound:
  - lights on,
  - direction indicators,
  - card left in reader,
  - automatic parking brake.

– Instrument panel dimmer: the instrument panel brightness can be adjusted using a button when the side lights are switched on.
– Certain functions or configurations are set by programming with the diagnostic tool.

– The oil level is measured after a set period; the voltage difference being measured across the terminals of the oil level sensor. This difference in voltage is processed by a circuit board, which sends this signal to the level indicator.

– For the "Change oil" and "Change oil as soon as possible" messages:
  The oil service interval distance and time values and the mileage before oil change are reinitialised after an oil change in accordance with two parameters: "Initial mileage before oil change and "Initial time before oil change".

  Reaching the 1st warning level: Oil change required soon
  When the mileage before oil change falls to 9,000 miles (1,500 km) OR the time interval falls to 2 months, the first warning level is reached: "Oil change required soon".

  Reaching the 2nd warning level: Change oil as soon as possible
  When the mileage before oil change OR the time before oil change to 0, the second warning level is reached and "Change oil as soon as possible" is displayed (with the SERVICE warning light coming on)

GETtheMANUALS.org

2. Display following defect mode

Trip Computer parameters	Fuel consumed fault present	ABS stored fault present	ECU stored fault present	LPG/CNG stored absence fault	petrol/ diesel sender stored fault present	Gas sender fault	fault(s) Currently being detected
Petrol/diesel consumed	dashes flashing at 2 Hz	no effect	dashes flashing at 2 Hz	no effect	no effect	no effect	Value remains unchanged
Petrol/diesel average consumption	dashes flashing at 2 Hz	dashes flashing at 2 Hz	dashes flashing at 2 Hz	no effect	no effect	no effect	Value remains unchanged
Petrol/diesel instantaneous consumption	dashes flashing at 2 Hz	dashes flashing at 2 Hz	dashes flashing at 2 Hz	no effect	no effect	no effect	Value remains unchanged
Petrol/diesel fuel range	dashes flashing at 2 Hz	dashes flashing at 2 Hz	dashes flashing at 2 Hz	no effect	dashes flashing at 2 Hz	no effect	Value remains unchanged
Gas consumed	dashes flashing at 2 Hz	no effect	dashes flashing at 2 Hz	dashes flashing at 2 Hz	no effect	no effect	Value remains unchanged
Average gas consumption	dashes flashing at 2 Hz	dashes flashing at 2 Hz	dashes flashing at 2 Hz	dashes flashing at 2 Hz	no effect	no effect	Value remains unchanged
Gas fuel range	dashes flashing at 2 Hz	dashes flashing at 2 Hz	dashes flashing at 2 Hz	dashes flashing at 2 Hz	no effect	dashes flashing at 2 Hz	Value remains unchanged
Distance travelled	no effect	dashes flashing at 2 Hz	no effect	no effect	no effect	no effect	Value remains unchanged
Average speed	no effect	dashes flashing at 2 Hz	no effect	no effect	no effect	no effect	Value remains unchanged
Oil service interval	no effect	dashes flashing at 2 Hz	no effect	no effect	no effect	no effect	Value remains unchanged
Miscellaneous	Letter "d" displayed on the 3rd digital line in Test mode	no effect	no effect	no effect	Letter "j" displayed on the 2nd digital line in test mode	no effect	no effect

GETtheMANUALS.org

Instrument panel computer, 30-track connector:

Tracks	Description
1	Driver's door
2	Right-hand direction indicator
3	Left-hand direction indicator
4	+ battery feed
5	Verlog Led control
6	Driver's seat belt
7	Safety Line output
8	Dipped headlights
9	Main beam headlights
10	Seat belt warning light supply
11	Rear fog lights
12	Front fog lights
13	Minimum washer fluid
14	Battery charge
15	Heated seats
16	+ After ignition feed
17	**RESERVE PHASE 1**
18	Oil pressure
19	Bonnet input
20	Not used
21	+ Oil level sensor
22	+ Fuel sender feed
23	Not used
24	Earth
25	- Fuel sender
26	- Oil level sensor
27	+ Side light feed
28	Repeat button
29	Parking brake input
30	Nivocode input

GETtheMANUALS.org

Instrument panel computer, 15-track connector:

Tracks	Description
1	Opening element indicator light output
2	Mute button
3	Negative seat belt warning light output
4	Not used
5	Dimmer
6	Odometer/trip computer scroll
7	Not used
8	Vehicle CAN_H copy output
9	Not used
10	Vehicle CAN_H
11	Vehicle CAN_L
12	**RESERVE PHASE 1**
13	Vehicle CAN_L copy output
14	Negative AIRBAG OFF warning light output
15	Positive AIRBAG OFF warning light feed

GETtheMANUALS.org

1. REPLACING, PROGRAMMING OR REPROGRAMMING THE INSTRUMENT PANEL:

For any operation involving the replacement of the instrument panel, follow the procedure described in the following paragraph (see **Configuration and programming**).

NOTE
After programming, reprogramming or replacing the instrument panel, it is essential to run the command **VP011 Fuel sender calibration**.

GETtheMANUALS.org

1. CONFIGURATIONS:

If the instrument panel has never been configured, the **NO PROG** message appears on the display when the ignition is switched on.

WARNING
It is necessary to take into account the configurations, in order that the new configuration values are used by the system.

CF or LC No.	Configuration	Note:
CF018 or LC001	**Reserve tank capacity**	
	→ LAGUNA II phase 2 (and phase 1)	= 6 l
	→ VELSATIS phase 2 (and phase 1)	= 9 l
CF019 or LC003	**Trip Computer display type**	
	→ Europe (l/100 km) → GB (miles/gallon) → Brazil (km/l)	Check the presence or absence of the instantaneous consumption trip computer screen.
CF035 or LC006	**Fuel tank capacity**	
	→ LAGUNA II phase 2 (phase 1)	= 70 l
	→ VELSATIS phase 2 (phase 1)	= 80 l
CF039 or LC065	**UCH**	
	→ VELSATIS → VELSATIS phase 2	
CF040 or LC066	**Particle filters**	
	→ None → With	If the vehicle is a VELSATIS phase 1, always configure CF040 to WITHOUT even if the vehicle is fitted with a particle filter.
CF049 or LC070	**Oil pressure warning threshold**	
	→ P9X/V4Y → Others	

GETtheMANUALS.org

CF050 or LC071	**Oil measurement temperature threshold**		
	→	V4Y	
	→	Others	
CF053 or LC072	**Oil measurement delay**		
	→	V4Y	
	→	Others	
CF054 or LC071	**Parking proximity sensor function**		
	→	None	
	→	With	
CF125 or LC002	**Language version**		
	→	French	
	→	English	
	→	Italian	
	→	German	
	→	Spanish	
	→	Dutch	
	→	Portuguese	
	→	Turkish	
	→	Japanese	
	→	Russian	
CF136 or LC047	**Tyre pressure units**		
	→	Bar	To select the unit of measurement that the tyre pressures will be displayed in.
	→	Psi	
CF137 or LC030	**Vehicle type**		
	→	VELSATIS	To select the vehicle in which the instrument panel is to be installed.

GETtheMANUALS.org

CF138 or LC049	**Type of fuel**	
	→ Petrol → Diesel	Petrol: Check that the rev counter indicates the scale to a maximum of 7000 rpm. Diesel: Check that the rev counter indicates the scale to a maximum of 6000 rpm, and that the preheating warning light comes on when the ignition is switched on. **IMPORTANT** **This check is essential, because it also sets the correct operation of the gauge.**
CF139 or LC050	**Voice synthesiser**	
	→ None → With	**(VELSATIS only)**
CF140 or LC051	**Unit of distance**	
	→ Km → Miles	
CF141 or LC052	**Overspeed function - Arabia**	
	→ None → With	Driving **at more than 78 mph (130 km/h)**, you should hear a warning.
CF142 or LC053	**Electronic stability program (ESP)**	
	→ With	If the vehicle is equipped with ESP: check, by pushing on the ESP OFF button, that "ESP deactivated" message definitely appears.
CF145 or LC056	**Tyre pressure monitor**	
	→ None → With	If the vehicle is equipped with a tyre pressure monitoring system: check that the vehicle profile does not remain displayed without the wheels and that there is no "Pressure not monitored" message (message indicating the absence of the tyre pressure monitoring system packets).

GETtheMANUALS.org

CF146 or LC057	**Automatic parking brake**	
	→ With	**IMPORTANT** If the instrument panel is configured **without automatic parking brake** and the vehicle is equipped with this function, the instrument panel displays **NO PROG** on the matrix display.
CF148 or LC059	**Automatic lights activation**	
	→ With → None	Disconnect the automatic headlights, and check that the "Auto Headlights Off" message is displayed.
CF149 or LC029	**Gearbox type**	
	→ Automatic gearbox → Sequential gearbox → Manual gearbox	If the vehicle has an automatic transmission or sequential gearbox, check that the instrument panel shows the gear selected. If the vehicle is not equipped with an automatic transmission or sequential gearbox, check that there is no "Check gearbox" message (this message indicates the absence of the automatic transmission frames if the instrument panel has been configured for an automatic transmission or sequential gearbox).
CF150 or LC061	**Cruise control/Speed limiter**	
	→ With → None → Distance control/speed limiter (automatic)	If the vehicle is equipped with a Cruise Control - Speed Limiter function: check that the cruise control or speed limiter warning light comes on when the cruise control/ speed limiter button is pressed.
CF158 or LC064	**Seat belt reminder buzzer**	
	→ With → None	
CF196 or LC101	**Forward strategy on cruise control/speed limiter**	
	→ With → None	For vehicles fitted with cruise control: If this has been incorrectly configured, a difference in speed will appear between the regulator speed setpoint and the vehicle speed displayed by the instrument panel.

GETtheMANUALS.org

Oil service interval:

– The time and mileage before oil change displayed need to be reinitialised after the oil is changed in accordance with the two parameters which can be configured with the CLIP tool, **VP008 Distance before oil change: current in km** and **VP009 Time before oil change: current value in months**.

Reaching the 1st warning level: Oil change required soon

– When the mileage before oil change falls to 9000 miles (1, 500 km) OR the time before next oil change falls to **2 months** the first warning level is reached **Oil change A**.

Reaching the 2nd warning level: Change oil as soon as possible

– When the mileage before oil change OR oil change interval reaches zero, the second warning level is reached and "Change oil as soon as possible" is displayed (with the **SERVICE** warning light coming on).

Oil change frequency:

This configuration must only be used if the instrument panel is **new**.
This configuration updates the new instrument panel, in accordance with two parameters which can be configured by the CLIP tool, **VP006 Oil change frequency in KM** and **VP007 Oil change frequency in months** from the old instrument panel.
Refer to the vehicle handbook for the mileage and frequency for the vehicle according to the country.
Ignition on, engine off. Run command **VP006 Oil change frequency in KM**.
Enter the Oil service interval in km.

Example of entry:
Using the Clip numeric keypad, type 20 to display 20,000 kilometres
or
enter 30 to display 30,000 kilometres

Special features of UK versions:
The new instrument panel is supplied configured, by default, in kilometres.
Carry out, in addition to the language configuration **CF125 Language version (KM → Miles)**, the calculation below to allow the instrument panel to display consistent values between the **distance** before next oil change and the desired oil service interval **frequency**.
To display the oil service intervals in **Miles, multiply** the value in miles indicated in the maintenance service booklet by **10** then **divide** by **6**, to find the exact figure in **kilometres**.
After the value has been entered, the computer automatically performs the conversion into **miles** for the **oil change frequency**.
It is imperative to use the following procedure for correct functioning of the range and frequency of oil change.

Example:
18,000 miles x 10 = 180,000 miles, then divide by 6 = 30,000 Km (**Enter 30**)

GETtheMANUALS.org

Odometer

This configuration must only be used if the instrument panel is **new**.
This configuration updates the mileometer on the new instrument panel, in accordance with a parameter configured by the CLIP tool, **VP010 Update mileometer**.
The update counter increments every time the instrument panel mileage is updated (maximum 15). This update counter is in the EEPROM and can only be reinitialised by the production or After-Sales services. The value of the update counter corresponds to a reset EEPROM value.

Calibration of the fuel sender

This configuration must only be used if the instrument panel is **new**.
This configuration reinitialises the measurement of the fuel level on the new instrument panel, in accordance with a parameter configured by the CLIP tool **VP011 Fuel sender calibration**.
Ignition on, engine off. Run command **VP011 Fuel sender calibration**.
The range of the nominal measurement is from **15 Ω** to **320 Ω** and the instrument panel converts the resistance value into litres.

2. PROGRAMMING:

None concerned.

GETtheMANUALS.org

Tool fault	Associated DTC	Diagnostic tool title
DF007	**9402**	Fuel sender circuit
DF009	**9407**	Oil pressure sensor circuit
DF016	**9401**	Oil level sensor circuit
DF018	**9405**	Instrument panel
DF019	**9404**	Battery voltage
DF020	**9406**	Steering column lock circuit

GETtheMANUALS.org

DF007 PRESENT OR STORED	FUEL SENDER CIRCUIT CO : Open circuit CC : Short circuit 1.DEF: Internal electronic fault 2.DEF: Voltage outside tolerance range

NOTES	**Conditions for applying the fault finding procedure to stored faults:** The fault is declared present when the ignition is switched on. Wait **2 minutes** to confirm the fault.

Manipulate the wiring harness between the fuel sender and the instrument panel until a change in fault status is produced (Present ↔ Stored).
Look for possible damage to the harness, and check the **connection and condition** of the fuel sender unit and its connections.
Repair if necessary.

Check the **continuity and insulation** of the following connections:
Fuel sender **track A1** → **track 22, 30-track connector**, instrument panel
Fuel sender **track B1** → **track 25, 30-track connector**, instrument panel
Repair if necessary.

Measure the **resistance** between **tracks A1 and B1** of the fuel sender unit.
Replace the fuel sender unit if the **resistance** value is not: **350 Ω fuel tank in reserve**
10 Ω full tank

If the fault is still present, **contact Techline**.

AFTER REPAIR	Clear the computer memory. Carry out a road test followed by another check with the diagnostic tool.

GETtheMANUALS.org

DF009 PRESENT OR STORED	OIL PRESSURE SENSOR CIRCUIT 1.DEF: Signal incoherence

NOTES	**Conditions for applying the fault finding procedure to stored faults:** Switch on the ignition, start the engine (the speed should be above **500 rpm**); the status should be inactive if the indicator light is not lit.

Manipulate the wiring harness between the instrument panel and the oil level sensor in order to produce a change in fault status (Present ↔ Stored).
Look for possible damage to the harness, and check **the connection and condition** of the oil level sensor and its connections.
Repair if necessary.

Check **the condition and connection** of the instrument panel 30-track connector, bent tabs, oxidised, broken, etc.
Repair if necessary.

Check the **insulation** and **continuity** of the connection:
Pressure switch, transparent connector, **track 1** ⟶ **track 18, 30-track connector**, instrument panel
Pressure switch, grey connector, **track 2** ⟶ **track 18, 30-track connector**, instrument panel
If the fault is still present, check the **R262 intermediate connector** on **track C5**.
Repair if necessary.

Check that the pressure switch is correctly fitted and check if there are any oil leaks (see **MR 395 Mechanical, 10A, Engine and peripherals**).

If the fault is still present, **contact Techline**.

AFTER REPAIR	Clear the computer memory. Carry out a road test followed by another check with the diagnostic tool.

GETtheMANUALS.org

DF016 PRESENT OR STORED	OIL LEVEL SENSOR CIRCUIT CO : Open circuit CC : Short circuit 1.DEF: Inconsistent current value 2.DEF: Internal electronic fault 3.DEF: Battery voltage out of range

NOTES	**Conditions for applying the fault finding procedure to stored faults:** The fault is declared present when the ignition is switched on. Wait **2 minutes** to confirm the fault.

Manipulate the wiring harness between the instrument panel and the oil level sensor in order to produce a change in fault status (Present ↔ Stored).
Look for possible damage to the harness, and check **the connection and condition** of the oil level sensor and its connections.
Repair if necessary.

Check **the condition and connection** of the instrument panel 30-track connector, bent tabs, oxidised, broken, etc.
Repair if necessary.

Check the **insulation and continuity** of the connections:
Oil level sensor **track 2** ⟶ t**rack 26** of the 30-track instrument panel connector
Oil level sensor **track 1** ⟶ t**rack 21** of the 30-track instrument panel connector
If the fault is still present, check the **R262 intermediate connector** on **tracks C6** and **C7**.
Repair if necessary.

Measure the resistance between the **tracks 3** and **4** of the oil level sensor.
Replace the oil level sensor if the **resistance** is not between **7** and **20** Ω.

If the fault is still present, **contact Techline**.

AFTER REPAIR	Clear the computer memory. Carry out a road test followed by another check with the diagnostic tool.

GETtheMANUALS.org

DF018 PRESENT OR STORED	INSTRUMENT PANEL 1.DEF: Fault in EEPROM 2.DEF: Battery voltage too low

NOTES	**Special notes:** An EEPROM fault is declared when the instrument panel has detected a fault in the management of the mileometer in the EEPROM*. The mileage is no longer guaranteed.
	Conditions for applying the fault finding procedure to stored faults: The fault is declared present after the ignition is switched on if the battery voltage is below **5 V** or above **12 V**.

1.DEF	***NOTES***	None.

If the fault is still present, contact the Techline.

2.DEF	***NOTES***	None.

Manipulate the wiring harness between the instrument panel and the battery until a change in fault status is produced (Present ↔ Stored).
Look for any harness damage, and check **the connection and condition** of the battery and its connections.
Repair if necessary.

Check **the condition and connection** of the instrument panel 30-track connector, bent tabs, oxidised, broken, etc.
Repair if necessary.

Check **the condition of the battery** and **the charge circuit**.
Check the **condition** of the vehicle **earths**.

Check for **+ 12 V** on **track 4 of the 30-track** instrument panel connector.
Repair if necessary.
With the ignition on, check for **+ 12 V** on **track 16 of the 30-track** instrument panel connector.
Repair if necessary.
Check for an **earth** on **track 24** of the **30-track** instrument panel connector.
Repair if necessary.

* EEPROM = Computer memory.

AFTER REPAIR	Clear the computer memory. Carry out a road test followed by another check with the diagnostic tool.

GETtheMANUALS.org

DF019 PRESENT OR STORED	BATTERY VOLTAGE 1.DEF: Voltage too weak 7V 2.DEF: Feed voltage too high (between 16 and 18 V) 3.DEF: Feed voltage too high (above 18 V) 4.DEF : Internal electronic fault.

NOTES	**Special note:** If the battery voltage is greater than **18 V** due to a polarity inversion, check that the instrument panel is not damaged.

Manipulate the wiring harness between the instrument panel and the battery until a change in fault status is produced (Present ↔ Stored). Look for any harness damage, and check **the connection and condition** of the battery and its connections. Repair if necessary.
Check **the condition and connection** of the instrument panel 30-track connector, bent tabs, oxidised, broken, etc. Repair if necessary.
Check **the condition of the battery** and **the charge circuit**. Check the **condition** of the vehicle **earths**.
Check for **+ 12 V** on **track 4 of the 30-track** instrument panel connector. Repair if necessary. With the ignition on, check for **+ 12 V** on **track 16 of the 30-track** instrument panel connector. Repair if necessary. Check for an **earth** on **track 24** of the **30-track** instrument panel connector. Repair if necessary.
If the fault is still present, contact the Techline.

AFTER REPAIR	Clear the computer memory. Carry out a road test followed by another check with the diagnostic tool.

GETtheMANUALS.org

DF020 PRESENT OR STORED	STEERING LOCK CIRCUIT CC.0 : Short circuit to earth

NOTES	**Conditions for applying the fault finding procedure to stored faults:** The fault is declared present after the ignition has been switched on.

Manipulate the wiring harness between the instrument panel and the electric steering lock in order to produce a change in fault status (Present ⇔ Stored).
Look for possible damage to the harness, and check the **condition and connection** of the electric steering column lock and its connections
Repair if necessary.

Check the **insulation** and **continuity** of the connection:
Instrument panel, **30-track connector, track 7** ⟶ **track 5** of the electric steering column lock
Repair if necessary.

If the fault is still present, contact the Techline.

AFTER REPAIR	Clear the computer memory. Carry out a road test followed by another check with the diagnostic tool.

GETtheMANUALS.org

NOTES	Only check the conformity after a **complete check** with the diagnostic tool. The values indicated in this conformity check are given as examples. **Application condition:** Engine **stopped, ignition on**.

MAIN COMPUTER STATUSES AND PARAMETERS

Order	Function	Parameter, Status checked or Action		Display and Notes	Fault finding
1	Power supply	**ET002:**	+ 12 V after ignition feed	**With the ignition on, the status should be PRESENT**	In the event of a fault, refer to the interpretation of status **ET002 + 12 V after ignition feed**.
2	Battery voltage	**PR110:**	Battery voltage	**8 V < PR110 < 16 V**	If there is a fault, consult the interpretation of fault **DF019 Battery voltage**.
3		**ET058:**	Battery charge	**OK**	In the event of a fault, refer to the interpretation of status **ET058 Battery charge**.
4	Vehicle speed	**ET008:**	Vehicle speed signal < 9 mph (15 km/h)	**YES**	In the event of a fault, refer to the interpretation of status **ET008 Vehicle speed signal < 9 mph (15 km/h)**.
5	Temperature	**ET056:**	Coolant temperature: no signal	**NO**	In the event of a fault consult the interpretation for status **ET056 Coolant temperature: no signal**.

GETtheMANUALS.org

NOTES	Only check the conformity after a **complete check** with the diagnostic tool. The values indicated in this conformity check are given as examples. **Application condition:** Engine **stopped, ignition on**.

TRIP COMPUTER

Order	Function	Parameter, Status checked or Action		Display and Notes	Fault finding
1	Radio	**ET030:**	Trip computer scroll button	**DEPRESSED RELEASED**	In the event of a fault, consult the interpretation of status **ET030 Trip computer scroll button**.
2		**ET034:**	Trip Computer reset button	**DEPRESSED RELEASED**	If the fault is still present, contact Techline.
3		**ET031:**	Mute button	**DEPRESSED RELEASED**	In the event of a fault, refer to the interpretation of status **ET031 Mute button**.
4		**ET033:**	Repeat button	**DEPRESSED RELEASED**	In the event of a fault, refer to the interpretation of status **ET033 Repeat button**.
5	Fuel	**PR003:**	Fuel consumption.	**Indicates the fuel consumption.**	If there is a fault, consult the interpretation for fault **DF007 Fuel sender unit circuit**.
6		**PR004:**	LPG fuel consumption	**Indicates the LPG fuel consumption.,**	
7		**PR112:**	Fuel flow	**Indicates fuel flow.**	
8	Instrument panel	**AC011:**	Symbol display	**This command allows the matrix information display to be viewed in three colours.**	If the fault is still present, contact Techline.
9		**AC015:**	Voice synthesiser	**With the ignition on and engine stopped, the voice synthesiser emits a message.**	

GETtheMANUALS.org

NOTES	Only check the conformity after a **complete check** with the diagnostic tool. The values indicated in this conformity check are given as examples. **Application condition:** Engine **stopped, ignition on**.

DISPLAY

Order	Function	Parameter, Status checked or Action		Display and Notes	Fault finding
1	Vehicle speed	**ET008:**	Vehicle speed signal < 9 mph (15 km/h)	**YES**	In the event of a fault, refer to the interpretation of status **ET008 Vehicle speed signal < 9 mph (15 km/h)**.
2	Washer fluid	**ET014:**	minimum washer fluid level	**Indicates the screen washer fluid level.** **YES:** Level too low **NO:** Level sufficient	In the event of a fault consult the interpretation of status **ET014 Minimum washer fluid level**.
3	Central door locking	**ET016:**	Driver's door open	**YES:** Door open **NO:** Door closed	In the event of a fault, refer to the interpretation of status **ET016 Driver's door open**.
4		**ET018:**	Bonnet open	**YES:** Bonnet open **NO:** Bonnet closed	In the event of a fault, refer to the interpretation of status **ET018 Bonnet open**.
5	Brake fluid level light	**ET019:**	minimum brake fluid level	**Indicates the brake fluid level.** **YES:** Level too low **NO:** Level sufficient	In the event of a fault, consult the interpretation of status **ET019 Minimum brake fluid level**.
6	Heated seat	**ET055:**	Heated seat	**Turn on the heated seat function, the status should be ACTIVE.**	In the event of a fault, refer to the interpretation of status **ET055 Heated seat**.
7	Oil pressure	**ET096:**	Oil pressure contact	**CLOSED** **OPEN**	If the event of a fault, consult the interpretation for fault **DF009 Oil pressure sensor circuit**.

GETtheMANUALS.org

NOTES	Only check the conformity after a **complete check** with the diagnostic tool. The values indicated in this conformity check are given as examples. **Application condition:** Engine **stopped, ignition on**.

DISPLAY (continued 1)

Order	Function	Parameter, Status checked or Action	Display and Notes	Fault finding
8	Parking brake	**ET097:** Parking brake	**Indicates parking brake position (APPLIED/RELEASE) except for automatic parking brakes; in which case the status is INACTIVE**	In the event of a fault, refer to the interpretation of status **ET097 Parking brake**.
9	Seat belt	**ET098:** Driver's seat belt contact	**With the ignition on, trigger the driver's seat belt, the status should be OPEN.**	In the event of a fault, refer to the interpretation of status **ET098 Driver's seat belt contact**.
10		**ET156:** Passenger seat belt contact	**With the ignition on, trigger the passenger seat belt, the status should be OPEN.**	In the event of a fault, perform fault finding on the airbag and pretensioner computer (see **38C, ABS**).
11	Exterior lighting	**ET157:** Dipped headlights signal	**PRESENT**	In the event of a fault, perform fault finding on the UCH (see **87B, Passenger compartment connection unit**).
12		**ET158:** Side lights signal		
13		**ET159:** Front fog light signal		
14		**ET160:** Rear fog light signal		
15	Instrument panel lighting	**ET107:** Lighting dimmer wheel	**With the ignition on, dipped headlights lit, the brightness will vary, the status should be CONNECTED.**	In the event of a fault contact Techline.

GETtheMANUALS.org

NOTES	Only check the conformity after a **complete check** with the diagnostic tool. The values indicated in this conformity check are given as examples. **Application condition:** Engine **stopped, ignition on**.

DISPLAY (continued 2)

Order	Function	Parameter, Status checked or Action		Display and Notes	Fault finding
16		**AC009:**	Instrument panel warning lights	**The instrument panel warning lights are activated in several stages. The warning lights are lit one after another, then the command lights all the warning lights.**	If the fault is still present, contact Techline.
17		**AC008:**	Instrument panel needle gauges	**With the ignition switched on and the engine stopped, the needles should move.**	
18		**AC005:**	Display test	**With the ignition switched on and the engine stopped, all the displays on the instrument panel light up.**	
19		**AC010:**	Lighting	**Following activation of all the instrument panel warning lights, the brightness will vary between 25 %, 50 %, 75 % then 100 % of the maximum brightness for 4 seconds each time.**	
20		**AC004:**	Seat belt warning light	**Seat belt warning light lighting.**	
21		**AC003:**	Opening element indicator light	**Opening element indicator light lighting.**	
22	Buzzer	**AC006:**	Buzzer	**With the ignition on and engine off, the buzzer should sound.**	

GETtheMANUALS.org

NOTES	Only check the conformity after a **complete check** with the diagnostic tool. The values indicated in this conformity check are given as examples. **Application condition:** Engine **stopped, ignition on**.

GAUGES

Order	Function	Parameter, Status checked or Action	Display and Notes	Fault finding
1	Fuel	**ET110:** Fuel sender defect mode	**NO** **Warns of a fuel level fault**	In the event of a fault, apply the fault finding procedure **DF007 Fuel sender circuit**.
2		**PR002:** Fuel sender resistance	**PR002 empty = 5 Ω** **PR002 full = 350 Ω**	
3		**PR010:** Tank capacity	**Indicates the volume of fuel contained in the tank.** **0 < PR010 < 80 l**	In the event of a fault, check that configuration **LC006 Fuel tank capacity** has been performed. If the fault is still present, contact the Techline.
4	Oil level	**PR011:** Oil level sensor voltage	**Maximum oil level:** **≤ 190 mV** **Minimum oil level:** **≥ 440 mV**	If there is a fault, consult the interpretation for fault **DF016 Oil level sensor circuit**.

GETtheMANUALS.org

NOTES	Only check the conformity after a **complete check** with the diagnostic tool. The values indicated in this conformity check are given as examples. **Application condition:** Engine **stopped, ignition on**.

MILEOMETER

Order	Function	Parameter, Status checked or Action		Display and Notes	Fault finding
1	Oil change frequency	**PR005:**	Oil change frequency in km	**Indicates the oil change frequency in km.**	If the fault is still present, contact Techline.
2		**PR006:**	Oil change frequency in months	**Indicates the oil change frequency in months.**	
3	Oil service interval	**PR007:**	Oil service interval: current value in km	**Indicates the distance remaining to the oil service in km. (this value should be equal to or below the frequency). PR005 - PR009 = PR007**	
4		**PR008:**	Oil service interval: actual value in months	**Indicates the oil service interval in months. (this value should be equal to or below the frequency).**	
5	Odometer	**PR009:**	Odometer	**Indicates the counter value in km.**	

GETtheMANUALS.org

Tool status	Diagnostic tool title
ET002	+ 12 V after ignition feed
ET008	Vehicle speed signal < 9 mph (15 km/h)
ET014	Minimum washer fluid level
ET016	Driver's door open
ET018	Bonnet open
ET019	Minimum brake fluid level
ET030	Trip computer scroll button
ET031	Mute button
ET033	Repeat button
ET034	Trip Computer reset button
ET055	Heated seats
ET056	Coolant temperature: no signal
ET058	Battery charge
ET096	Oil pressure contact
ET097	Parking brake
ET098	Driver's seat belt contact
ET107	Lighting dimmer wheel
ET110	Fuel sender defect mode
ET156	Passenger seat belt contact
ET157	Dipped headlights signal
ET158	Side lights signal
ET159	Front fog light signal
ET160	Rear fog light signal

GETtheMANUALS.org

ET002	+ 12 V AFTER IGNITION FEED

NOTES	There must be no present or stored faults. Switch on the ignition, status **ET002** should be **PRESENT**.

Check instrument panel fuse **F11 (20A)** on the Passenger Compartment Fuse and Relay Board.
Check the passenger compartment fuse and relay box connectors.

Check **the insulation and continuity** of the wiring between:

Fuse and relay box, **green connector, track 1** → **Track B9, black connector**, passenger compartment fuse and relay box

Passenger compartment fuse and relay box, **black connector, track J5** → **Track 4, 30-track connector**, instrument panel

Observe the Verlog diode.
Repair if necessary.

AFTER REPAIR	Carry out another fault finding check on the system. Deal with any other faults. Clear the stored faults.

GETtheMANUALS.org

ET008	VEHICLE SPEED SIGNAL < 9 MPH (15 KM/H)

NOTES	There must be no present or stored faults. Switch on the ignition and carry out a road test.

In the event of a fault, **carry out a fault finding procedure on the multiplex network** and the **ABS** (see **88B, Multiplex network** and **38C, ABS**).

AFTER REPAIR	Carry out another fault finding check on the system. Deal with any other faults. Clear the stored faults.

GETtheMANUALS.org

ET014	SCREEN WASH LEVEL MINIMUM

NOTES	There must be no present or stored faults. Switch on the ignition, fill the washer fluid reservoir: status **ET014** should be **YES**.

Check the instrument panel connector and the washer fluid reservoir connector.
Check that the **earth** is properly connected to the reservoir on **track 2**. Repair if necessary.
Check **the insulation and continuity** of the connection: Instrument panel, **30-track connector, track 13** ⟶ **track 1** of the washer fluid reservoir If the fault is still present, check **intermediate connector R265** on **track C7**. Repair if necessary.
Check that the reservoir's two tracks are not short-circuiting. If necessary, replace the reservoir.

IMPORTANT
The warning message is only displayed for 30 seconds on activation of the after ignition feed if the fault is already present, otherwise 8 seconds in fault finding.
The fault is confirmed after 30 seconds.

AFTER REPAIR	Carry out another fault finding check on the system. Deal with any other faults. Clear the stored faults.

GETtheMANUALS.org

ET016	DRIVER'S DOOR OPEN

NOTES	There must be no present or stored faults. Switch on the ignition, open the door, status **ET016** should be **YES**.

Check the driver's door wiring harness connector.
Check the **earth** on **track D** of the lock.
IMPORTANT
There are several locks (see **Technical Note XXX, Wiring diagrams, 140**).

Check **the continuity and insulation** between:
Instrument panel, **30-track connector, track 1** ⟶ **Track C** of the driver's door locking function
If the fault is still present, check **intermediate connector R153** on **track B10**.
Repair if necessary.

Check that the lock is working and in particular that it engages properly into the striker.

AFTER REPAIR	Carry out another fault finding check on the system. Deal with any other faults. Clear the stored faults.

GETtheMANUALS.org

ET018	BONNET OPEN

NOTES	There must be no present or stored faults. Switch on the ignition, open the bonnet, status **ET018** should be **YES**.

Check the instrument panel connector and the bonnet connector.
Check that the bonnet switch is firmly attached to the bodywork and that it operates properly.

Check **the insulation and continuity** of the wiring between:
Instrument panel **30-track connector, track 19** ⟶ **Track 2** of the bonnet switch
Repair if necessary.

Check **the insulation and continuity** of the wiring between:
Bonnet switch **track 1** ⟶ Vehicle earth
If the fault is still present, check **intermediate connector R265** on **track B1**.
Repair if necessary.

AFTER REPAIR	Carry out another fault finding check on the system. Deal with any other faults. Clear the stored faults.

GETtheMANUALS.org

ET019	MINIMUM BRAKE FLUID LEVEL

NOTES	There must be no present or stored faults. Switch on the ignition, check the brake fluid level in the reservoir.

Check the instrument panel connector and the reservoir connector.
Check **the insulation and continuity** of the wiring between: Instrument panel **30-track connector, track 30** ⟶ **track 2** of the brake fluid reservoir Repair if necessary.
Check that the earth is properly connected to **track 1** of the brake fluid reservoir level sensor. If necessary, replace the reservoir.

AFTER REPAIR	Carry out another fault finding check on the system. Deal with any other faults. Clear the stored faults.

GETtheMANUALS.org

ET030	TRIP COMPUTER SCROLL BUTTON

NOTES	There must be no present or stored faults. Switch on the ignition, press the button: status **ET030** should be **PRESSED**.

Check the instrument panel connector and the wiper stalk connector.
Check **the insulation and continuity** of the wiring between: Instrument panel, **15-track connector, track 6** ⟶ **track B7** of the windscreen wiper stalk Repair if necessary.
Check that the **earth** on **track B5** is properly connected to the stalk. If necessary, replace the stalk.

AFTER REPAIR	Carry out another fault finding check on the system. Deal with any other faults. Clear the stored faults.

GETtheMANUALS.org

ET031	MUTE BUTTON

NOTES	There must be no present or stored faults. The vehicle must be equipped with a voice synthesiser. Switch on the ignition, press the button: status **ET031** should be **PRESSED**.

Manipulate the wiring harness between the instrument panel connector and the voice synthesis control connector, to produce a change in fault status.
Look for any damage to the wiring harness, check the **connection and condition** of the voice synthesis computer and its connections.
Repair if necessary.

Carry out a fault finding procedure on the multiplex network (see **88B Multiplex network**).

Check **the insulation and continuity** of the wiring between:
Instrument panel, **15-track connector, track 2** ⟶ **track A3** of the voice synthesiser control
Repair if necessary.

Check that the **earth** is properly connected to control **track A2**.
If necessary, change the set of buttons.

AFTER REPAIR	Carry out another fault finding check on the system. Deal with any other faults. Clear the stored faults.

GETtheMANUALS.org

ET033	REPEAT BUTTON

NOTES	There must be no present or stored faults. The vehicle must be equipped with a voice synthesiser. Switch on the ignition, press the button: status **ET033** should be **PRESSED**.

Manipulate the wiring harness between the instrument panel connector and the voice synthesis control connector, to produce a change in fault status.
Look for any damage to the wiring harness, check the **connection and condition** of the voice synthesis computer and its connections.
Repair if necessary.

Carry out a fault finding procedure on the multiplex network (see **88B Multiplex network**).

Check **the insulation and continuity** of the wiring between:
Instrument panel, **30-track connector, track 28** ⟶ **track A1** of the voice synthesiser control
Repair if necessary.

Check that the earth is properly connected to control on **track A2**.
If necessary, change the set of buttons.

AFTER REPAIR	Carry out another fault finding check on the system. Deal with any other faults. Clear the stored faults.

GETtheMANUALS.org

ET055	HEATED SEAT

NOTES	There must be no present or stored faults. Switch on the ignition, press the heated seat button: status **ET031** should be **ACTIVE**.

Check the instrument panel connection and the connectors.
Check **the continuity and insulation** between: Instrument panel, **30-track connector, track 15** ⟶ **Track A1** of the heated seat switches (driver and passenger) If the fault is still present, check the **R334** and **R335 intermediate connectors** on **track 16**. Repair if necessary.
Check that the seats are properly installed and that the automatic connectors (**R334** and **R335**) between the seat wiring harness and the passenger compartment wiring harness are correctly locked.
Also check that the **earth** on **track B1** is connected to these switches.

AFTER REPAIR	Carry out another fault finding check on the system. Deal with any other faults. Clear the stored faults.

GETtheMANUALS.org

ET056	COOLANT TEMPERATURE SIGNAL ABSENT

NOTES	There must be no present or stored faults. Switch on the ignition, start the engine.

Perform fault finding on the **multiplex network** and the **injection** (see **88B, Multiplex network** and **17B, Petrol injection** or **13B, Diesel injection**).

AFTER REPAIR	Carry out another fault finding check on the system. Deal with any other faults. Clear the stored faults.

GETtheMANUALS.org

ET058	BATTERY CHARGE

NOTES	There must be no present or stored faults. Switch on the ignition, start the engine (the speed should be above **1000 rpm**); status **ET058** should be **OK** if the warning light is not lit. Ensure that the speed is above 400 rpm for more than 10 seconds before registering a possible fault.

Manipulate the wiring harness between the instrument panel connector and the alternator connector, in order to produce a change in status.
Look for any harness damage, and check **the condition and connection** of the alternator and its connections.
Repair if necessary.

Check the alternator installation and mountings.
Check that the alternator is recharging the battery.

Check **the insulation and continuity** of the wiring between:
Instrument panel, **30-track connector, track 14** ⟶ **track 1** of the alternator black connector
If the fault is still present, check **intermediate connector R262** on **track C4**.
Repair if necessary.

If status **ET058** does not change to **INACTIVE**, check the alternator operating signals (see **MR 405 Mechanical, 16A, Starting - Charging**).

AFTER REPAIR	Carry out another fault finding check on the system. Deal with any other faults. Clear the stored faults.

GETtheMANUALS.org

ET097	PARKING BRAKE

NOTES	There must be no present or stored faults. Switch on the ignition, apply the brake: status **ET097** should be **APPLIED**.
	Special Note Check whether the vehicle is fitted with an automatic parking brake by referring to configuration **LC057 Automatic parking brake**. If it does have this function, status **ET097** is **RELEASED**.

Manipulate the wiring harness between the instrument panel connector and the handbrake connector in order to produce a change in status.
Look for possible damage to the harness, and check the **connection and condition** of the handbrake and its connections.
Repair if necessary.

Check that the handbrake is firmly attached to the bodywork and that it operates correctly.

Check **the insulation and continuity** of the wiring between:
Instrument panel, **30-track connector, track 29** ⟶ **Track 1** of the handbrake
Repair if necessary.

AFTER REPAIR	Carry out another fault finding check on the system. Deal with any other faults. Clear the stored faults.

GETtheMANUALS.org

ET098	DRIVER'S SEAT BELT CONTACT

NOTES	There must be no present or stored faults. Switch on the ignition, fasten the seat belt: status **ET098** should be **OPEN**.

Check the instrument panel connector and the seat belt anchorage stirrup connector.
Manipulate the wiring harness between the instrument panel connector and the stirrup/seat belt anchorage, to produce a change in fault status.
Look for possible damage to the harness, and check **the connection and the condition** of the stirrup/seat belt anchorage and its connections.
Repair if necessary.

Check **the insulation and continuity** of the wiring between:
Instrument panel, **30-track connector, track 6** ⟶ **track A2** of the driver's seat belt clamp
If the fault is still present, check the **R335 intermediate connector** on **track 2**.
Repair if necessary.

Check that there is an earth connection on the seat belt anchorage/stirrup (**track A1**).
If necessary, change the seat belt anchorage stirrup.

AFTER REPAIR	Carry out another fault finding check on the system. Deal with any other faults. Clear the stored faults.

GETtheMANUALS.org

ET110	DRIVER'S SEAT BELT CONTACT

NOTES	If in short circuit for over 100 seconds, the needle fluctuates between full and half-full. If in open circuit for over 100 seconds, the needle fluctuates between half-full and 0.

Check the **insulation and continuity** of the connections:

Instrument panel, **30-track connector, track 22** → track A1 of the fuel sender

Instrument panel, **30-track connector, track 25** → track B1 of the fuel sender

Repair if necessary.

AFTER REPAIR	Carry out another fault finding check on the system. Deal with any other faults. Clear the stored faults.

GETtheMANUALS.org

Tool parameter	Diagnostic tool title
PR002	Fuel sender unit resistance
PR003	Fuel consumption
PR004	LPG fuel consumption
PR005	Oil change frequency in km
PR006	Oil change frequency in months
PR007	Distance to next oil service: current value in km
PR008	Time to next oil service: current value in months
PR009	Odometer
PR010	Fuel tank capacity
PR011	Oil level sensor voltage
PR110	Battery voltage
PR112	Fuel flow

GETtheMANUALS.org

PR110	BATTERY VOLTAGE

NOTES	None.

Check that there are no faults.
If the voltage is at minimum:
Check the battery and the charge circuit.
If the voltage is at maximum:
Check that the charging voltage is correct with and without electrical consumers switched on.

Check the **insulation, continuity and the absence of interference resistance** on the following connection:
Instrument panel, **30-track connector, track 04** ⟶ **+ battery feed**
Repair if necessary.

GETtheMANUALS.org

PR112	FUEL FLOW

NOTES	With the engine idling, the flow should be around **0**. Vary the engine speed to confirm the increase in flow.
	Note: A fuel flow signal fault causes an inconsistency in trip computer operation.

Perform a **multiplex network** and **injection test** (see **88B, Multiplex network** and **13B, Petrol injection** or **17B, Diesel injection**).

GETtheMANUALS.org

Tool commands	Diagnostic tool title
SC001	Oil service interval
RZ001	Fault memory
AC003	Opening element indicator light
AC004	Seat belt warning light
AC005	Display test
AC006	Audible Alert (Buzzer)
AC008	Instrument panel needle gauges
AC009	Instrument panel warning lights
AC010	Lighting
AC011	Symbol display
AC015	Voice synthesiser
VP002	Enter VIN
VP006	Oil change frequency in km
VP007	Oil change frequency in months
VP008	Distance to next oil service: current value in km
VP009	Time to next oil service: current value in months
VP010	Mileometer updating
VP011	Fuel tank sender unit calibration

GETtheMANUALS.org

CLEARING

RZ001: Fault memory
This command is used for clearing the computer's stored faults.

ACTIVATION

AC003: Opening element indicator light
This command enables the opening element indicator lights to be tested.

Switch on the ignition and run command **AC003**.
The buzzer should be heard.

AC004: Seatbelt warning light
This command enables the seat belt warning light to be tested.

Switch on the ignition and run command **AC004**.
The buzzer should be heard.

AC005: Display test
This command enables the entire display assembly to be tested.

Switch on the ignition and run command **AC005**.
All the display elements on the instrument panel should light up.

AC006: Audible warning (Buzzer)
This command is for testing the buzzer function.

Switch on the ignition and run command **AC006**.
The buzzer should be heard.

AC008: Instrument panel needles
This command enables the needles to be tested (rev counter, speedometer, oil and coolant temperature).

Switch on the ignition and run command **AC008**.
The buzzer should be heard.

AC009: Instrument panel indicator/ warning lights
This command enables the all the instrument panel warning lights to be tested.

The warning lights come on and then go out:
– make sure that lighting of one warning light does not cause the lighting, even partially, of another warning light.
The indicator lights are all lit:
– make that sure the lighting is correct.

GETtheMANUALS.org

ACTUATION (continued)

AC010: Lighting
This command enables the instrument panel lighting to be tested.

Switch on the ignition and run command **AC010**.
The instrument panel lights up; change the lighting brightness.

AC011: Symbol display
This command enables the matrix display to be tested.

Switch on the ignition and run command **AC011**.
All the matrix display pixels should be red.

AC015: Voice synthesiser
This command enables the voice synthesiser to be tested.

Switch on the ignition and run command **AC015**.
A voice synthesis message should be heard.

GETtheMANUALS.org

NOTES	**Only consult the customer complaints after a complete check using the diagnostic tool.** **Run fault finding on the multiplex network.** **Run fault finding on the instrument panel.** **In the case of a top of the range instrument panel (with central display), run fault finding on the function.**

ONE OR MORE OF THE NEEDLES DOES/DO NOT MOVE	**ALP 1**
ONE OR MORE OF THE NEEDLES DOES/DO NOT MOVE IN ACCORDANCE WITH THE SCALE DIVISIONS	**ALP 1**
THE DISPLAY ON THE TRIP COMPUTER OR CENTRAL DISPLAY IS INCOMPLETE OR BLURRED	**ALP 1**
SOME OF THE TRIP COMPUTER DATA IS INCORRECT	**ALP 1**
SOME OF THE TRIP COMPUTER DATA HAS BEEN REPLACED WITH DASHES	**ALP 1**
THE FUEL SENDER (APART FROM LPG) DISPLAYS AN IMPLAUSIBLE VALUE	**ALP 1**
THE OIL GAUGE DISPLAYS AN INCORRECT READING	**ALP 1**
THE TRIP COMPUTER DOES NOT WORK WHEN THE BUTTON IS PRESSED	**ALP 2**
THE WARNING LIGHTS DO NOT COME ON OR MESSAGES ARE NOT DISPLAYED WHEN THERE IS A FAULT	**ALP 3**
THE WARNING LIGHTS COME ON WHEN THERE IS NO FAULT	**ALP 3**
THE VOICE SYNTHESISER DOES NOT WORK	**ALP 4**
THE RADIO DOES NOT CUT OUT WHEN THE VOICE SYNTHESISER IS DELIVERING A MESSAGE	**ALP 5**
THE VOICE MESSAGES CANNOT BE UNDERSTOOD (DIFFERENT LANGUAGE, ETC.)	**ALP 6**

GETtheMANUALS.org

MESSAGES ARE ISSUED WHEN THEY SHOULD NOT BE	ALP 7
THE INSTRUMENT PANEL BACKLIGHTING DOES NOT WORK	ALP 8
THE INSTRUMENT PANEL DOES NOT LIGHT UP WHEN THE SIDE LIGHTS ARE ON	ALP 8
INSTRUMENT PANEL SELF-TEST PROCEDURE	PRO 1

GETtheMANUALS.org

ALP 1	**One or more of the needles does/do not move** **One or more of the needles does/do not move in accordance with the scale divisions** **The display on the on trip computer or central display is incomplete or blurred** **Some of the trip computer data is incorrect** **Some of the trip computer data has been replaced with dashes** **The fuel gauge (apart from LPG) displays an implausible value** **The oil gauge displays an incorrect measurement**

NOTES	None.

Run the instrument panel self-test procedure (**PRO 1**).

AFTER REPAIR	If an instrument panel has been replaced: Remember to run a self-test and clear the faults. Remember to configure the instrument panel.

GETtheMANUALS.org

ALP 2	The trip computer does not work when the button is pressed

NOTES	Carry out a fault finding procedure on the multiplex network (see **88B Multiplex network**). Switch on the ignition.

Run the instrument panel self-test procedure (**PRO 1**).
Check the **insulation and continuity** of the connection between: Instrument panel, **15-track connector, track 6** ⟶ **track B7** of the windscreen wiper stalk Repair if necessary.
Check the **earth** on **track B5** of the wiper stalk connector.
Check that the voltage on **track 6** is zero when the button is pressed. If necessary, repair the wiring or replace the windscreen wiper control.
Replace the instrument panel.

AFTER REPAIR	If an instrument panel has been replaced: Remember to run a self-test and clear the faults. Remember to configure the instrument panel.

GETtheMANUALS.org

ALP 3	The warning lights do not come on or messages are not displayed when there is a fault The warning lights come on although there is no fault

NOTES	Carry out a fault finding procedure on the multiplex network (see **88B Multiplex network**). Carry out a fault finding procedure on the system that controls the warning light / message. Switch on the ignition.

List of warning/indicator lights lit up by a wire connection and not via the multiplex network:
– brake fluid fault,
– dipped headlights on,
– main beam headlights on,
– front fog lights on,
– rear fog lights on,
– direction indicators,
– heated seat indicator light,
– immobiliser warning light,
– parking brake,
– driver's seat belt.

If these warning/indicator lights do not come on or come on when they should not:
– check the continuity of the wiring between the warning/indicator light control (sensor, lighting stalk, alternator, etc.) and the instrument panel,
– check that the control system is working properly, that there is a feed to it and that there are no short-circuits on the connection.

The UCH detects if there is a bulb failure and transmits the bulb status on the multiplex network.

Replace the instrument panel.

AFTER REPAIR	If an instrument panel has been replaced: Remember to run a self-test and clear the faults. Remember to configure the instrument panel.

GETtheMANUALS.org

ALP 4	Voice synthesiser does not work

NOTES	Switch on the ignition. Press the repeat button, check if a message is issued. Carry out a fault finding procedure on the multiplex network, in particular check that the network linking the instrument panel to the voice synthesiser is correct). Carry out fault finding on the instrument panel. Check the (language) configurations. Check that the presses on the repeat and mute buttons have been detected.

Check the feed (+ battery feed, earth and + ignition feed) to the instrument panel and the voice synthesiser.
If the radio does not mute, check the multiplex network. Switch off the ignition, disconnect and reconnect the battery. Switch the ignition back on so that the instrument panel is reconfigured correctly.
Check the **continuity and insulation** of the following connections: Voice synthesiser **track 14** ⟶ **track A1** of the speaker Voice synthesiser **track 15** ⟶ **track A2** of the speaker Check the speaker. Repair if necessary.
Replace the voice synthesiser computer. If the fault persists, replace the instrument panel.

AFTER REPAIR	If an instrument panel has been replaced: Remember to run a self-test and clear the faults. Remember to configure the instrument panel.

GETtheMANUALS.org

ALP 5	**The radio does not cut out when the voice synthesiser is issuing a message**

NOTES	Check that the radio is working correctly. Switch on the ignition.

Check **the continuity and insulation** of the following connection:
Voice synthesiser **track 10** ⟶ **Track 3, black connector** for the radio
Repair if necessary.

Disconnect the voice synthesiser.
Connect **track 10** of the connector to earth.
If the radio mutes, replace the voice synthesiser; if not, replace the radio.

AFTER REPAIR	If an instrument panel has been replaced: Remember to run a self-test and clear the faults. Remember to configure the instrument panel.

GETtheMANUALS.org

ALP 6	The voice synthesiser messages are inconsistent (different language...)

NOTES	Carry out a fault finding procedure on the multiplex network (see **88B Multiplex network**). Carry out fault finding on the instrument panel. Carry out a fault finding procedure on the systems that the messages refer to. Switch on the ignition.

Replace the voice synthesiser computer.
If the fault is still present, replace the instrument panel.

AFTER REPAIR	If an instrument panel has been replaced: Remember to run a self-test and clear the faults. Remember to configure the instrument panel.

GETtheMANUALS.org

ALP 7	Messages are issued when they should not be

NOTES	Carry out a fault finding procedure on the multiplex network (see **88B Multiplex network**). Carry out a fault finding procedure on the system that the message refers to.

Replace the instrument panel.
If the fault is still present, replace the voice synthesiser.

AFTER REPAIR	If an instrument panel has been replaced: Remember to run a self-test and clear the faults. Remember to configure the instrument panel.

GETtheMANUALS.org

ALP 8	**The lighting dimmer on the instrument panel does not work** **The panel does not light up when the side lights are on**

NOTES	Switch on the ignition. Switch on the side lights. Carry out a fault finding procedure on the instrument panel (check that the side lights are active).

Check that the voltage on **track 27 of the 30-track** instrument panel connector is **12 V** when the side lights are switched.

Check **the continuity and insulation** of the connections between:

Instrument panel, **15-track connector, track 5** ⟶ **track 2** of the dimmer

Dimmer **track 3** ⟶ Earth

Repair if necessary.

Check that the resistance of the dimmer varies between **0** and **1000** Ω when the wheel is moved.
If not, check that the climate control varies and refer to the fault finding procedure for the climate control (see **62B, Regulated air conditioning**).

AFTER REPAIR	If an instrument panel has been replaced: Remember to run a self-test and clear the faults. Remember to configure the instrument panel.

GETtheMANUALS.org

PRO 1	Instrument panel self-test procedure

NOTES	There must be no present or stored faults. The warning lights run by the instrument panel should be lit. Press the button of the trip computer (trip computer scroll button on the windscreen wiper stalk). Holding the button down, switch on the ignition (card inserted into the reader up to the stop). As soon as the needles begin to move, the test mode runs for **5 minutes**. Release the button. To skip from one screen to another on the trip computer, briefly press the trip computer scroll button again. Press the km reset button to exit from the mode and **clear the faults**.

Check that the rev counter, speedometer, coolant temperature gauge and fuel level gauge needles are moving properly and following all the scale divisions. If not, replace the instrument panel.
Check that all the digits on the trip computer are lit up. If not, replace the instrument panel.
Each time the Trip computer scroll button is pressed, the image on the central display changes. Replace the instrument panel if some images are unclear.

AFTER REPAIR	If an instrument panel has been replaced: Remember to run a self-test and clear the faults. Remember to configure the instrument panel.

GETtheMANUALS.org

VEL SATIS

8 Electrical equipment

86A RADIO

General Information	86A - 2
Security code recovery procedure	86A - 6
Anti-theft code	86A - 7
Configuration - Settings	86A - 10
Connections	86A - 11
Self-test procedure	86A - 12
Radio fault finding: Customer complaints	86A - 13
Fault finding chart	86A - 14
Recovering a jammed CD	86A - 28

V1 **Edition Anglaise**

"The repair procedures given by the manufacturer in this document are based on the technical specifications current when it was prepared.

The procedures may be modified as a result of changes introduced by the manufacturer in the production of the various component units and accessories from which his vehicles are constructed."

All rights reserved by Renault s.a.s.

Copying or translating, in part or in full, of this document or use of the service part reference numbering system is forbidden without the prior written authority of Renault s.a.s.

© Renault s.a.s.

GETtheMANUALS.org

The tuner-amplifier has a test menu (see radio self-test procedure) to carry out repair operations or fault finding.

The radio will operate for approximately 20 minutes without the ignition being switched to the accessories position. The radio beeps then switches off.

Diagram:

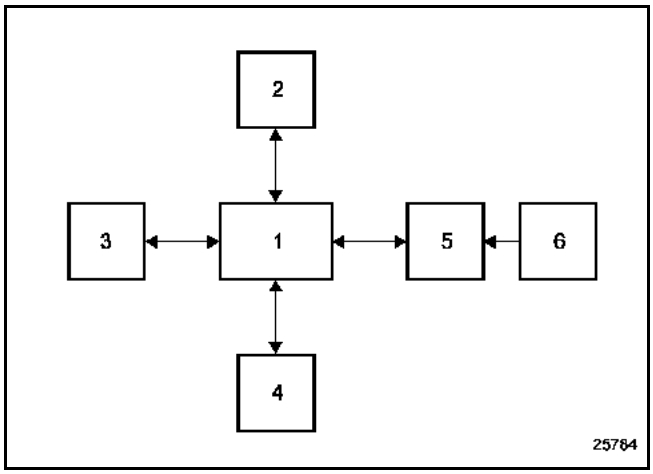

1 Radio
2 Aerial
3 CD changer
4 Speakers/tweeter speakers
5 Display
6 Steering wheel controls

GETtheMANUALS.org

Special features of radios in the PN range:
PN0: radio with built-in display.
PN1: radio with remote display.
PN2: radio and cassette player with built-in display.
PN3: radio and cassette player with remote display.
PN4: radio and CD player with built-in display.
PN5: radio and CD player with remote display.

Notes:
- All radios are designed to control a CD changer.
- There is a special procedure for replacing the CD changer located in the dashboard front panel.
- According to the vehicle version, the remote displays may have a 24 or 30-track connector or two 15-track connectors. This display may be built into the instrument panel.

GETtheMANUALS.org

The radio features allow you to:
– listen to the radio (four geographical zones can be programmed for FM radio)
– display the name of the station using RDS which automatically switches to the best transmitter (AF function),
– receive traffic news (**I Traffic** function),
– receive news flashes and emergency bulletins (**I News** function).
– receive public safety emergency bulletins (**PTY 31**).

RADIO FUNCTION

The tuner has three selection modes displayed on the screen and accessible from the radio front panel:
– manual mode (MANU),
– preset mode (PRESET),
– alphabetical mode (LIST).

CASSETTE FUNCTION

The cassette plays automatically once cassette mode has been selected using the steering wheel control or the front panel.

Only the Dolby fast-forward and rewind with search controls can be selected by specific buttons.

Note:
The Mute function, accessed via the voice synthesiser or the steering wheel control, stops the cassette playing.

CD FUNCTION

The CD player can play conventional discs and any audio tracks on a CD-ROM.

CDs can be played in order or tracks can be chosen at random.

If a CD changer is being used, random play is possible on only one of the possible 6 compact discs.

THERMAL PROTECTION

If the radio temperature is too high for it to function properly, the volume is automatically reduced (without changing the volume shown in the display).

Should one of the speaker tracks short circuit, the supply to the amplifier will be cut off.

GETtheMANUALS.org

VOLUME CONTROL

The volume can be increased according to the vehicle speed. To operate this function:
select the desired volume adjustment curve by using the **Expert** mode (press and hold the **Source** button until a bleep is heard): **SPEED 5** for maximum increase, **0** to cancel the increase.

GETtheMANUALS.org

2 methods for recovering the pre-code (1 letter and 3 digits):

1 For **PN** type radios:
The pre-code is recovered by removing the **RECEIVER** and noting the four characters on the barcode that follow the letter T (see photo no. 114936).
On older versions, note the series number at (**B**) and the pre-code after the letter T at (**C**).
2 For **NR** type radios
The pre-code is recovered **without removal**, by applying the following procedure:
- Switch on the radio.
- Press buttons 1 and 6 simultaneously for approximately 2 seconds.
- The pre-code appears on the display.

Note: on NR type radios, the pre-code remains visible at (A) on the radio (see photo no. 114937).

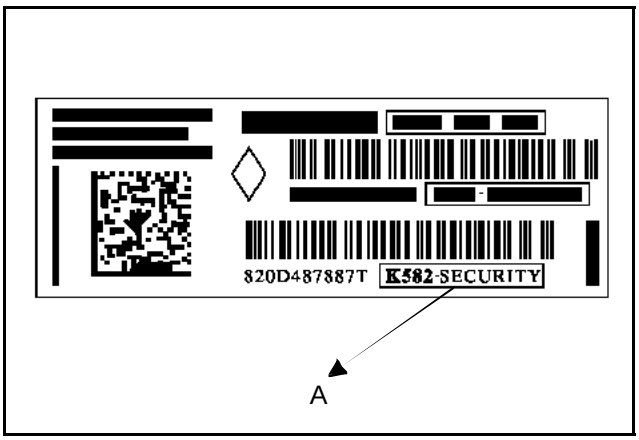

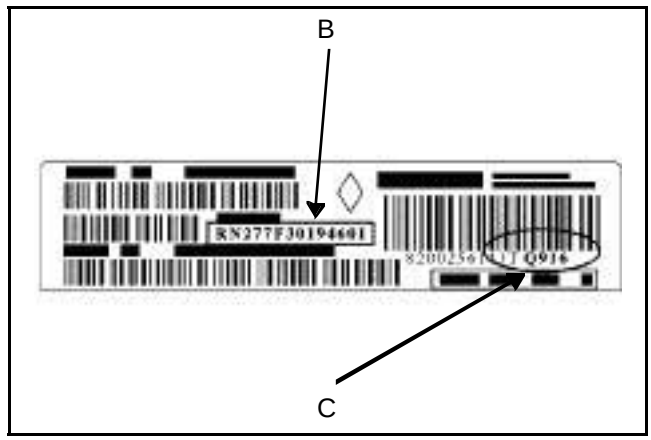

THE VIN MUST BE ENTERED IN ALL 4 SOLUTIONS

4 methods for recovering the radio code (4 digits):

1 **Only the VIN is available**: connect to code management on Renault.Net and enter the VIN. The code server gives the original radio code entered in the World Vehicle Database (BVM).

If the code has not been entered in the World Vehicle Database or is incorrect when the code is entered in the radio, follow the procedure below:
2 **The pre-code is available**: go back to code management on Renault.Net, enter the pre-code and obtain the radio code.
3 For older vehicles which do not have a radio pre-code, enter the series number of the radio again. For example, for Philips radio, this code starts with RN. In the photo of the radio, this code is RN277F30194601.

If this code is correct, the radio will operate again; if not, follow the procedure below:
4 On Renault.Net, write a help message to be sent to the assistance unit.

WHEN REPLACING PARTS, OR FOR AN UNKNOWN VIN, WRITE A HELP MESSAGE IN CODE MANAGEMENT ON RENAULT.NET TO UPDATE THE DATABASE.

GETtheMANUALS.org

The radio is protected by a four digit code. This code must be entered via the control satellite or the radio keypad each time the battery is disconnected.

Entering the code with the control on the steering wheel:
Press the lower button on the control to confirm an entry.

Entry via the radio:
Enter the digits using buttons 1, 2, 3 and 4, and then confirm with button 6.

If the code is entered incorrectly, the radio will be locked (1 minute for the first error, 2 minutes for the second error, 4 minutes for the third error, etc. 32 minutes maximum).

Some configurations must be set after the code has been entered for the first time (see the **Configuration** Section). These settings are stored when the battery is disconnected.

Reminder:
The radio will operate for approximately 2 minutes in scrambled mode without the code having been entered (with regular warning beeps).

If the vehicle is equipped with a CD changer in the front panel, a code is exchanged between the CD changer and the radio.
– If a new CD changer is fitted, the radio code is programmed when the battery or CD changer is connected.
– If the radio is replaced, enter the security code of the old radio connected to the CD changer. The CD changer is programmed with the code for the new radio.
– If the old radio code is lost, the changer code can be cleared using the clearing code. The clearing code is issued by the Techline, server, etc.

Note:
If there is a configuration error, you can return to scrambled mode by pressing the 2 and 5 buttons at the same time as switching the power on. Then wait 2 minutes.

Note:
The CD changer is supplied uncoded. When it is installed in the vehicle, the CD changer is programmed with the radio supply code.

Reminder:
The radio will operate for approximately 2 minutes in scrambled mode without the code having been entered (with regular warning beeps).

IMPORTANT
If the vehicle is fitted with a top of the range navigation system (ITS), enter the radio code in the following way:
1. switch on the system by activating the vehicle's + after ignition feed,
2. wait 2 minutes: scrambled mode with beeps from the speakers, then code request screen appears,
3. enter the radio code using the ITS keypad: move the cursor with the central control and press to confirm.
4. switch off the ignition.

GETtheMANUALS.org

THE DISPLAY SHOWS 'CODE' OR '0000'

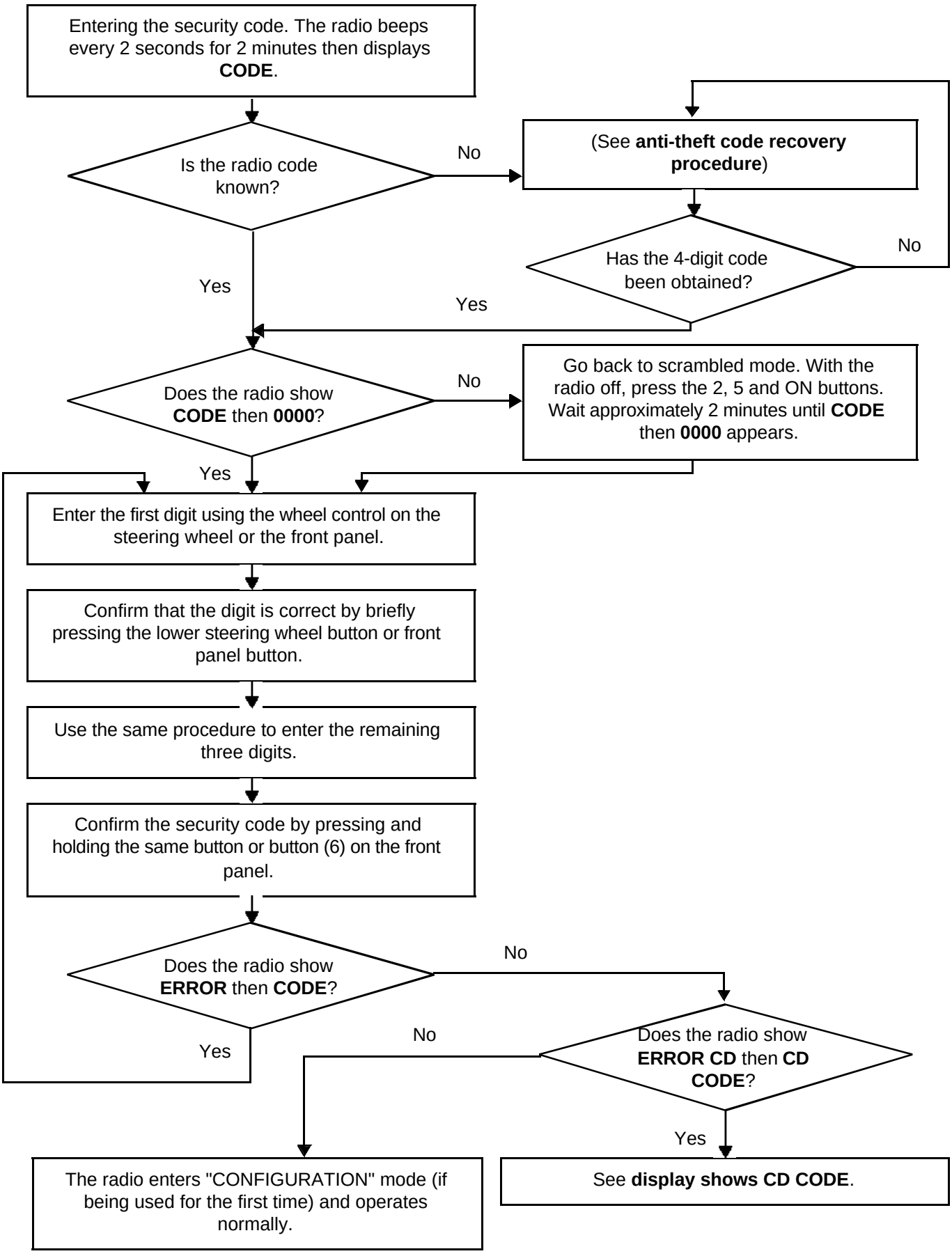

GETtheMANUALS.org

THE DISPLAY SHOWS "CD CODE"

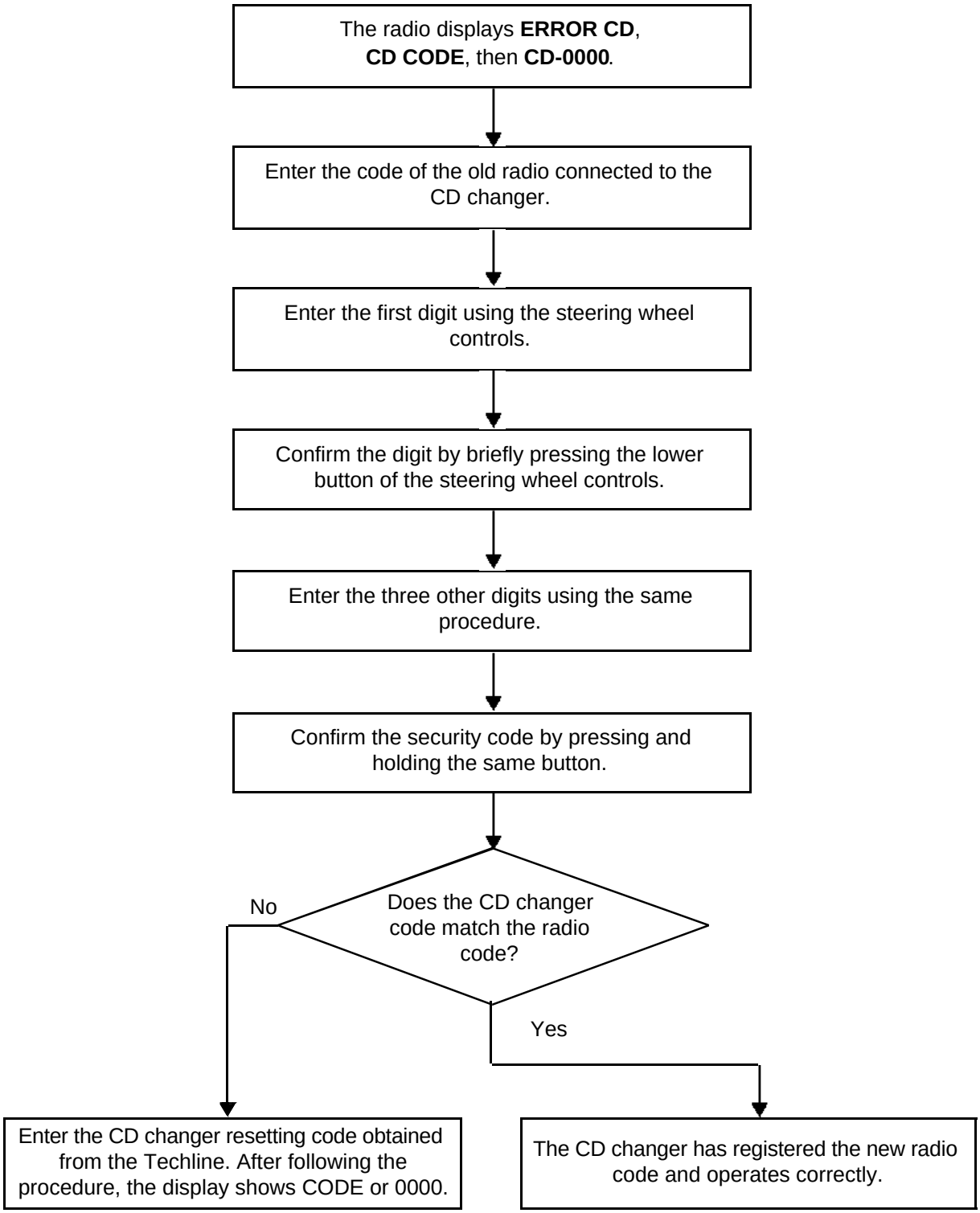

GETtheMANUALS.org

CONFIGURATIONS

NOTE:
To select the zone in which the radio is to be used, press the buttons **2** and **5** while switching the power on. Then wait approximately 2 min. Enter the four digit code and then:

- select the tone curve appropriate for the vehicle
  - 0: no regulation
  - 1: Twingo
  - 2: Clio
  - 3: Mégane / Scénic
  - 4: Laguna
  - 5: Vel Satis - Espace

- select the relevant zone:
  - **America**
  - **Japan**
  - **Asia**
  - **Arabia**
  - **Others** (Europe, Africa, other)

Note:
These configurations are not required when the secret code is entered after the power supply has been cut.

SETTINGS

To enter configuration mode (**Expert** mode), press and hold the **Source** button (4 seconds) until you hear a bleep. This allows you to adjust the following functions:

NR range:
- AF mode activation (automatic retuning),
- vehicle speed-dependent volume control (5 for maximum regulation, 0 to cancel regulation),
- **Loudness** mode activation.

PN range:
- AF mode activation (automatic retuning),
- vehicle speed-dependent volume control (5 for maximum regulation, 0 to cancel regulation),
- **Loudness** mode activation,
- **Assisted tuner** mode activation,
- configuration of the number of **speakers** (2 or 4),
- manual or dynamic list selection.

PN6 radio:
- AF mode activation (automatic retuning),
- vehicle speed-dependent volume control (5 for maximum regulation, 0 to cancel regulation),
- **Loudness** mode activation,
- **Assisted tuner** mode activation,
- configuration of the number of **speakers** (2 or 4),
- manual or dynamic list selection.
- activation of data storage in accordance with the RENAULT Card: **CARD ON/OFF**. To operate, the radio must be accompanied by the navigation system.

GETtheMANUALS.org

To allocate the tracks for the different functions that are connected to the radio (CD changer, steering wheel control, display, aerial), refer to the Wiring Diagrams Technical Note corresponding to the vehicle.

Radio: see Wiring diagrams Technical Note, vehicle, code **261**

CD changer: see Wiring diagrams Technical Note, vehicle, code **1272**

Display: see Wiring diagrams Technical Note, vehicle, code **1127**
For displays which are connected to the instrument panel, the code is **247**

Steering wheel control: see Wiring diagrams Technical Note, vehicle, code **325**

Aerial: see Wiring diagrams Technical Note, vehicle, code **886**

GETtheMANUALS.org

The self-test procedure mode of the previous generation radios (PN0-6) allows certain main functions to be tested:

- by pressing buttons 2 and 4 at the same time, the speakers can be tested. They are supplied one by one; the display enables the connections and signals from each speaker to be checked,
- by pressing buttons 1 and 6 at the same time, the reception level can be tested (after frequency is displayed),
  - 9 or letter: good reception,
  - less than 3: poor reception,
  - if 2: total loss of stereo.

The self-test procedure mode of the new generation radios (NR4/5) enables certain main functions to be tested using the combination of buttons 1, 6 and i. The messages will be displayed in the following way:

- **Radio pre-code displays one letter and 3 digits to avoid removal of the radio**,
- speaker test with two bleeps (bass - treble) from the speakers, with the tested speakers shown on the display (front left-hand H01, front right-hand H02, rear right-hand H03, rear left-hand H04),
- displays the frequencies and levels of the tuner sensors,
- software version displayed, displays fault finding for the connected aerial if the aerial is supplied by a coaxial cable; in this case, the display shows H15 with X = 0, 1 or 2 depending on the aerial status (0: open circuit, 1: short circuit to earth, 2: power consumption),
- audio test loudness OFF (H08), cuts any loudness for an audio test.

Note:
Also displays source use time and total time in 10 minute slots (Tuner (H09)/CD (H10)/cassette (H11)/CD changer (H12)/auxiliary (13)/MP (H14)/Total (H15)).

GETtheMANUALS.org

THE RADIO BEEPS APPROXIMATELY EVERY 2 SECONDS	ALP 1
THE RADIO DOES NOT WORK (NO SOUND) WHEN THE RADIO ON BUTTON IS PRESSED	ALP 2
THE RADIO DOES NOT SWITCH ON AUTOMATICALLY WHEN + ACCESSORIES FEED IS SWITCHED ON OR SWITCHES OFF AFTER 20 MINUTES	ALP 3
THE RADIO IS SWITCHED ON, BUT THE DISPLAY AND SATELLITE CONTROLS DO NOT WORK	ALP 4
THE PLANET WHEEL CONTROLS DO NOT WORK	ALP 5
RADIO RECEPTION FAULTS	ALP 6
THE VOLUME DOES NOT INCREASE WITH THE VEHICLE SPEED	ALP 7
LIGHTING DOES NOT CHANGE WHEN THE VEHICLE LIGHTS ARE SWITCHED ON	ALP 8
NO SOUND CUT-OUT DURING CARMINAT OR HANDS-FREE KIT MESSAGES	ALP 9
THE INFRARED REMOTE CONTROL DOES NOT WORK	ALP 10

GETtheMANUALS.org

ALP 1	The radio beeps approximately every 2 seconds

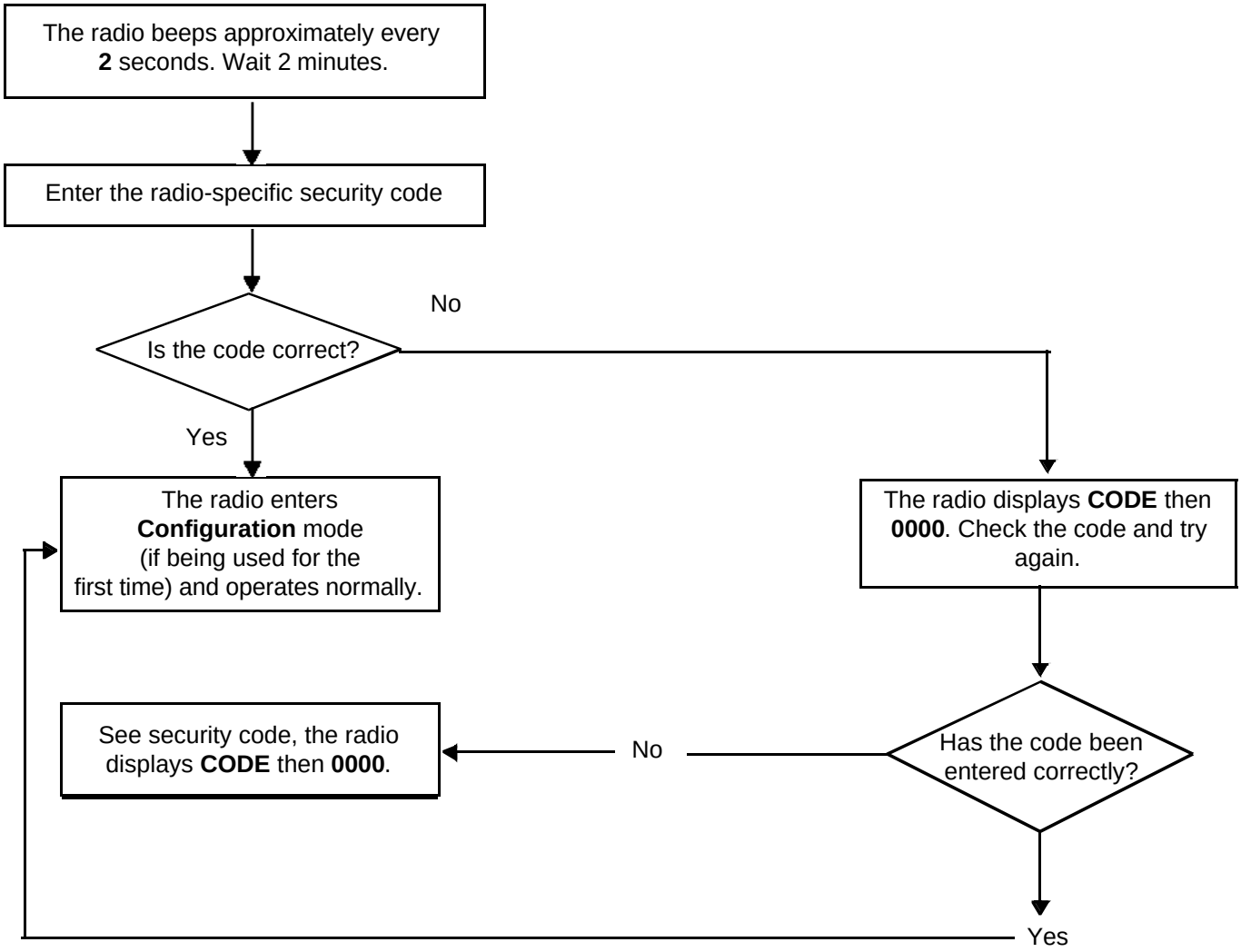

GETtheMANUALS.org

ALP 2	The radio does not operate when the ON button is pressed

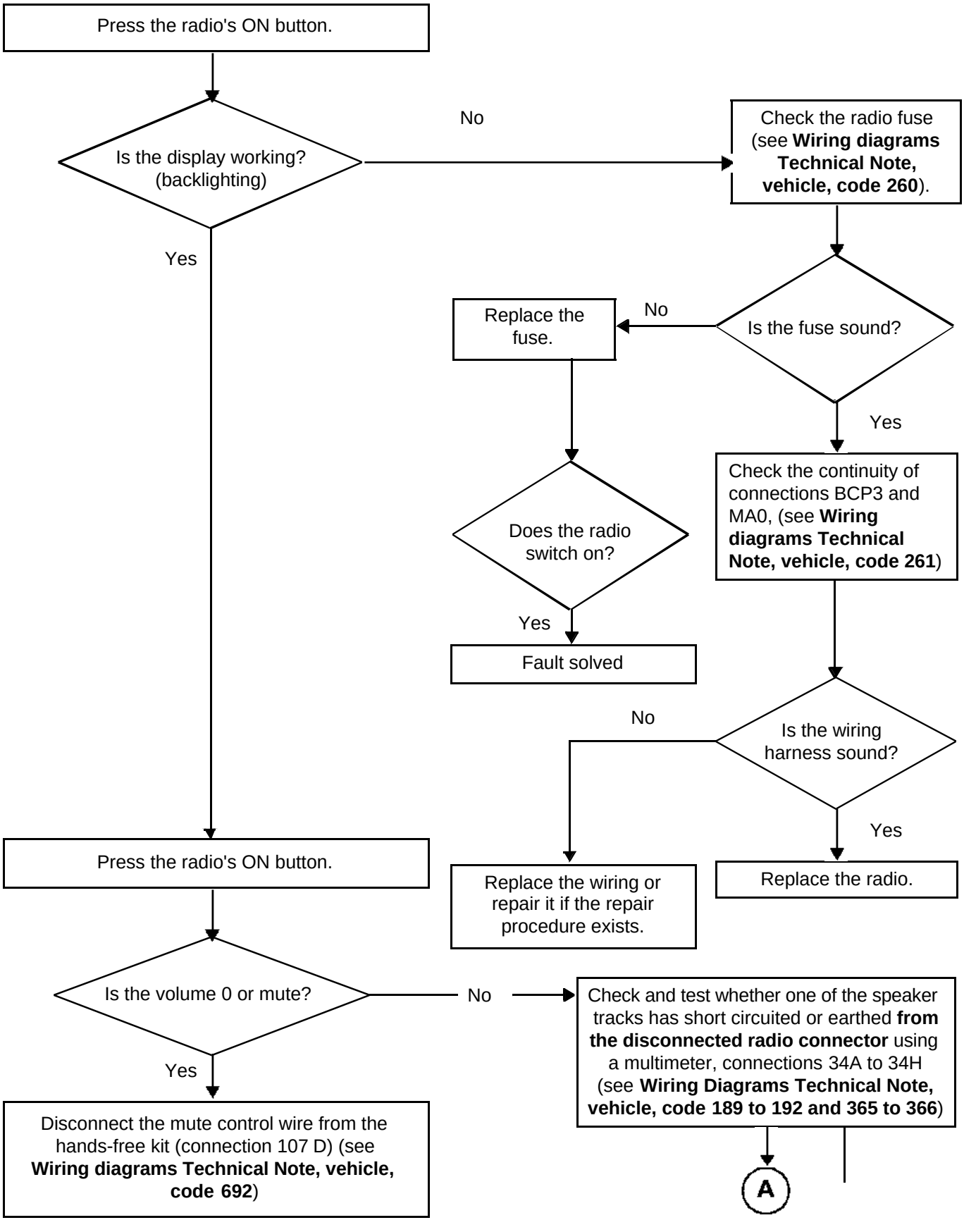

GETtheMANUALS.org

ALP 2 CONTINUED	

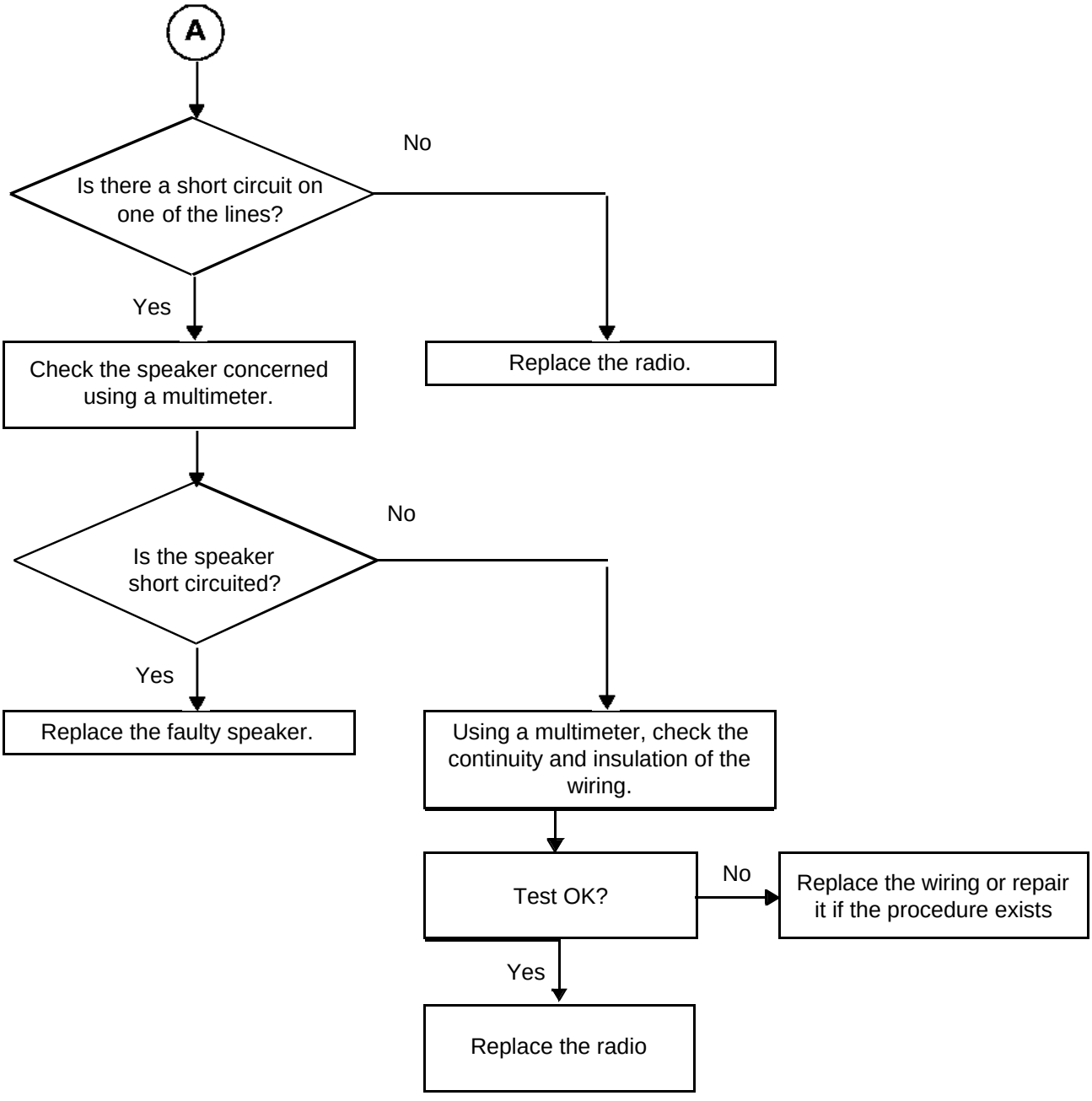

GETtheMANUALS.org

ALP 3	The radio does not switch on automatically or switches off after 20 minutes

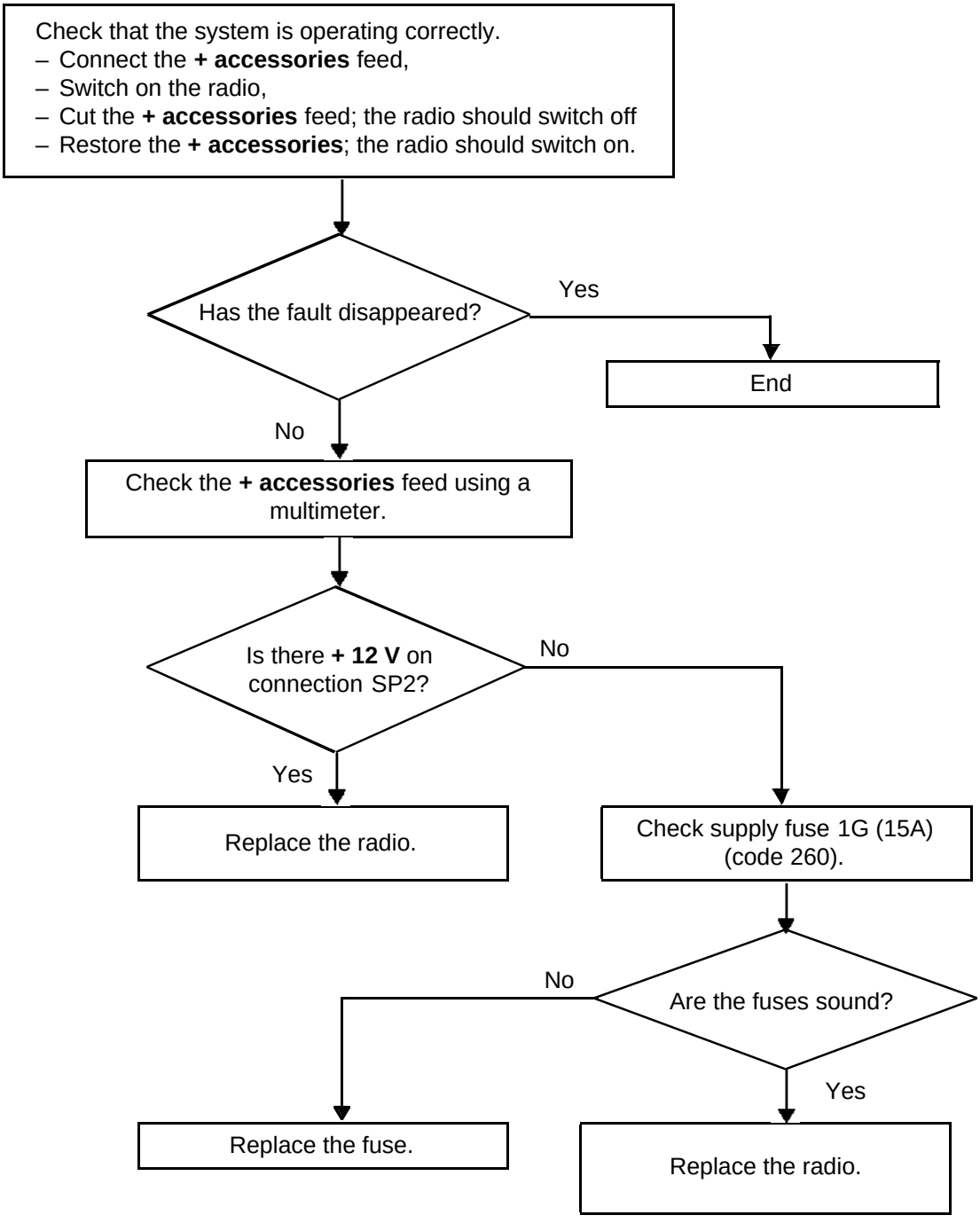

GETtheMANUALS.org

EXCEPT ESPACE IV, SCENIC II

ALP 4	**The radio is switched on, but the display and control satellite do not operate**

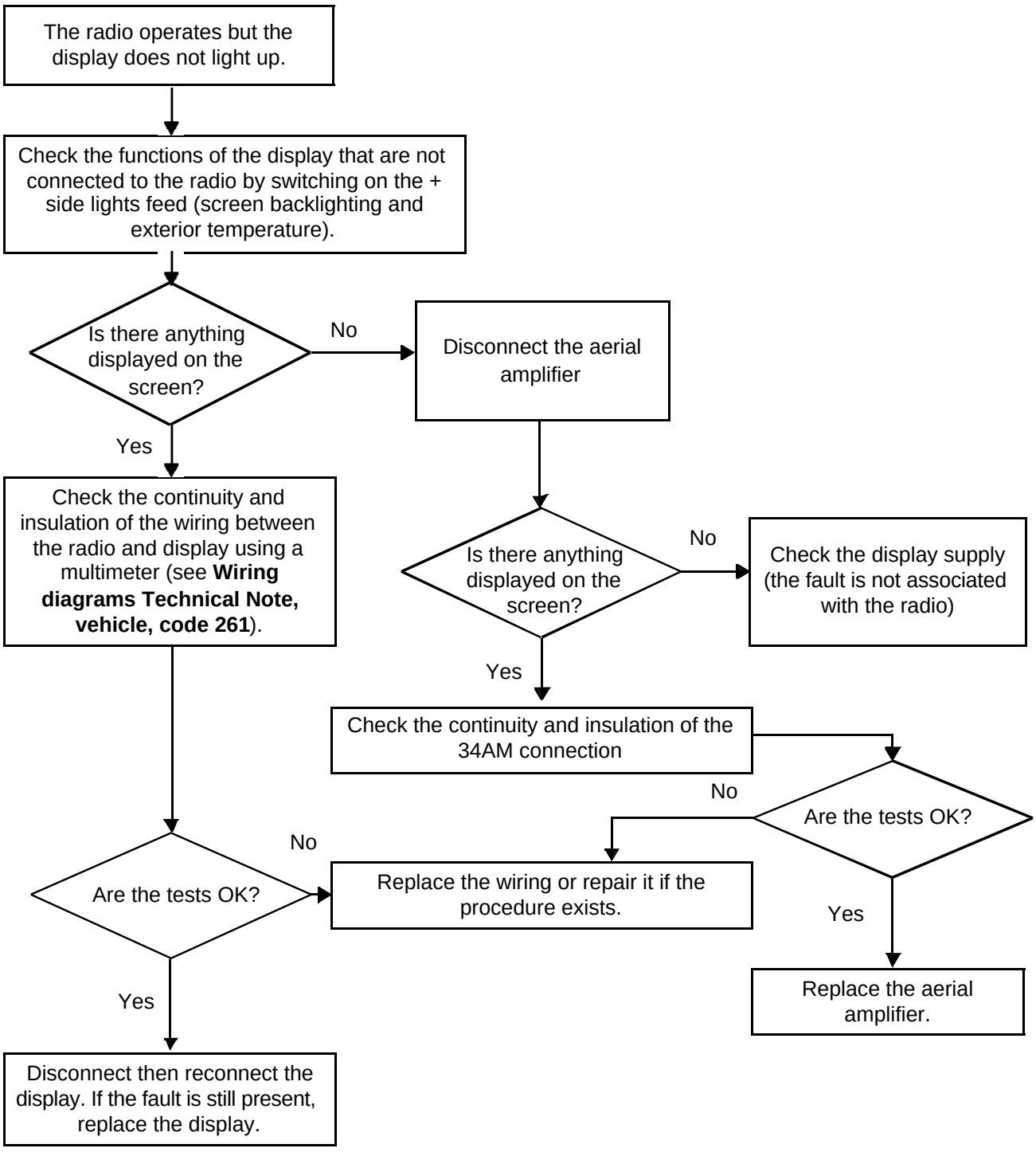

GETtheMANUALS.org

ESPACE IV, SCENIC II

ALP 4	The radio is switched on, but the display and control satellite do not operate

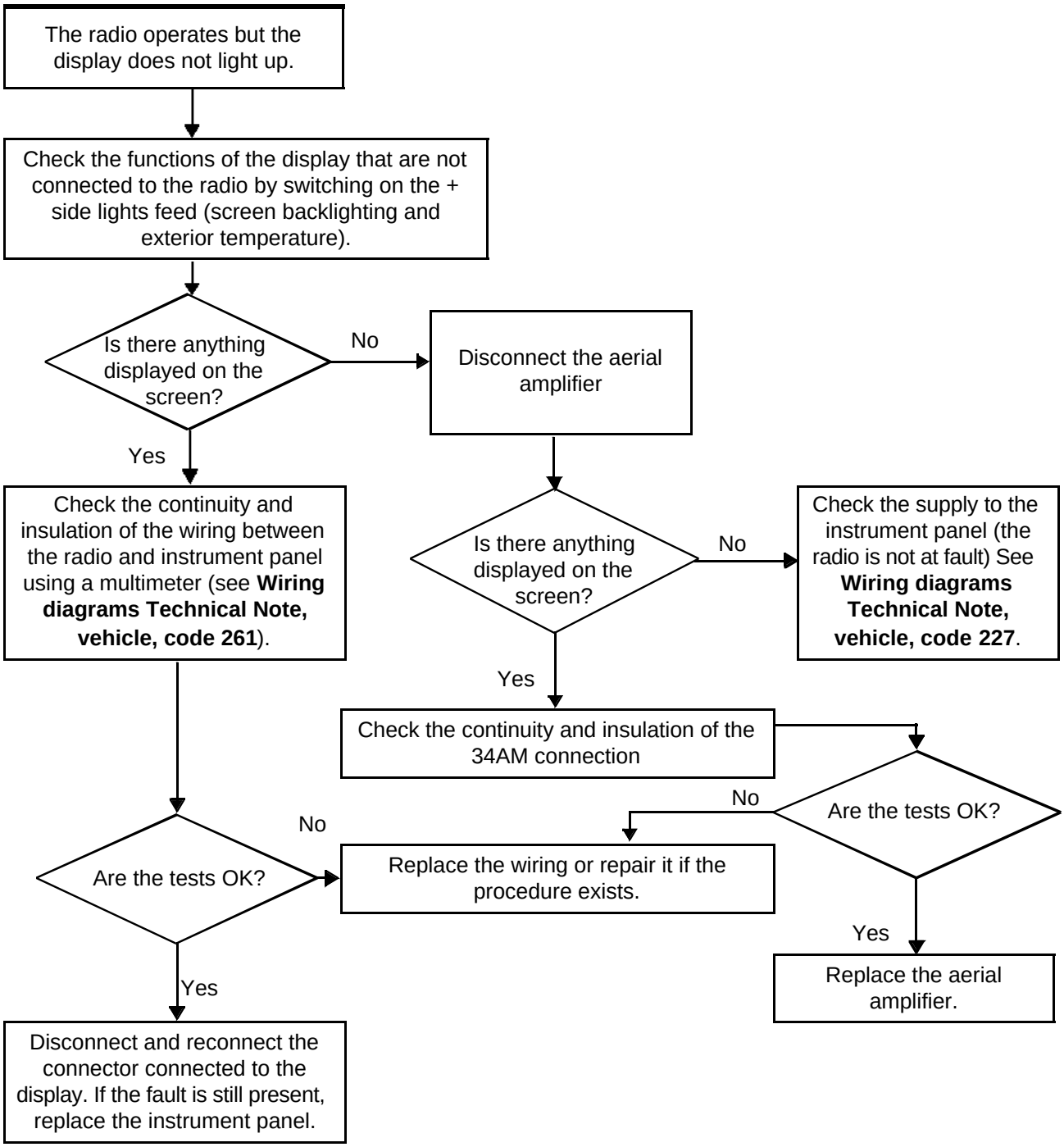

GETtheMANUALS.org

ALP 5	The satellite controls do not work

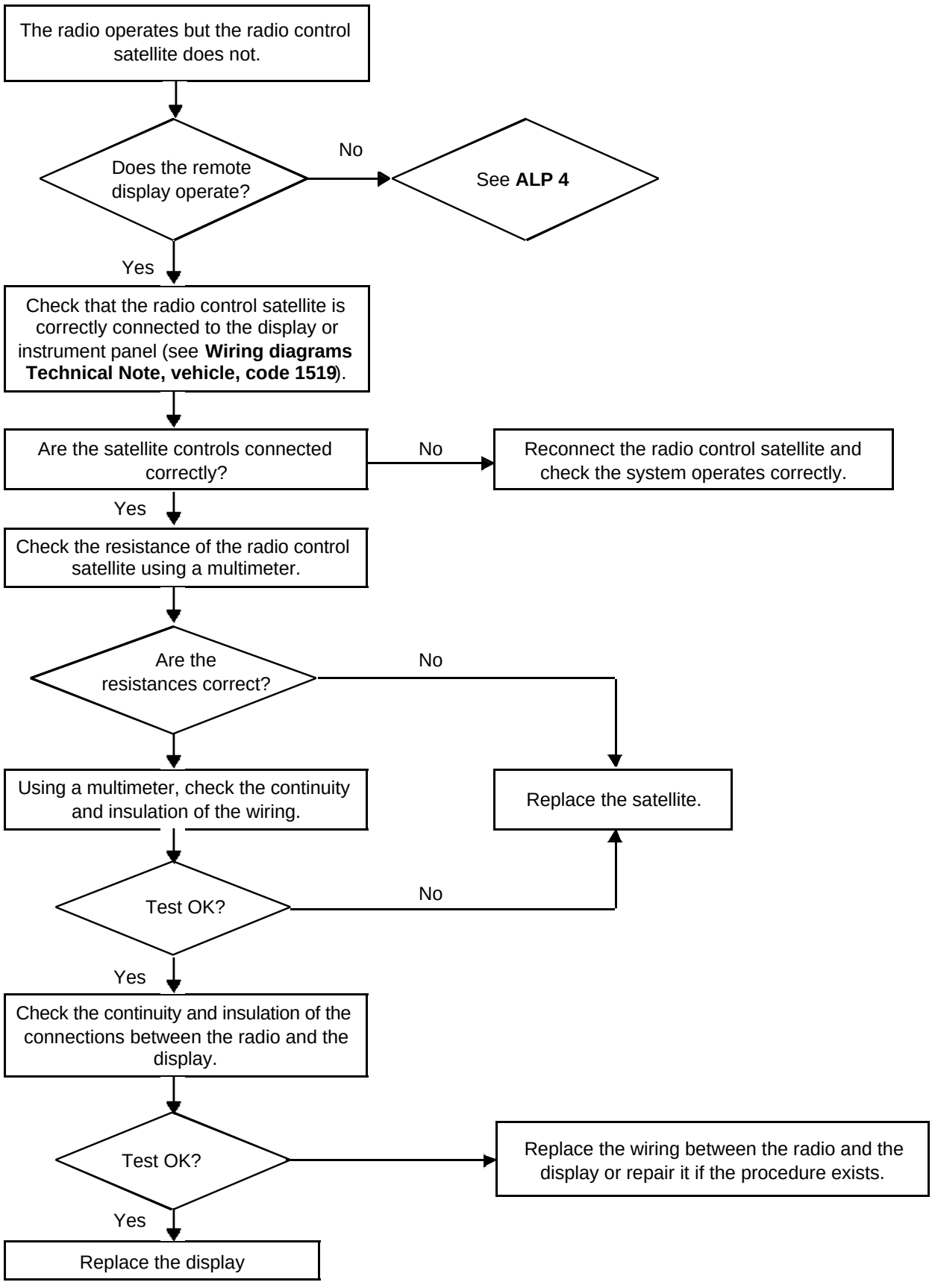

GETtheMANUALS.org

ALP 6	Radio reception faults

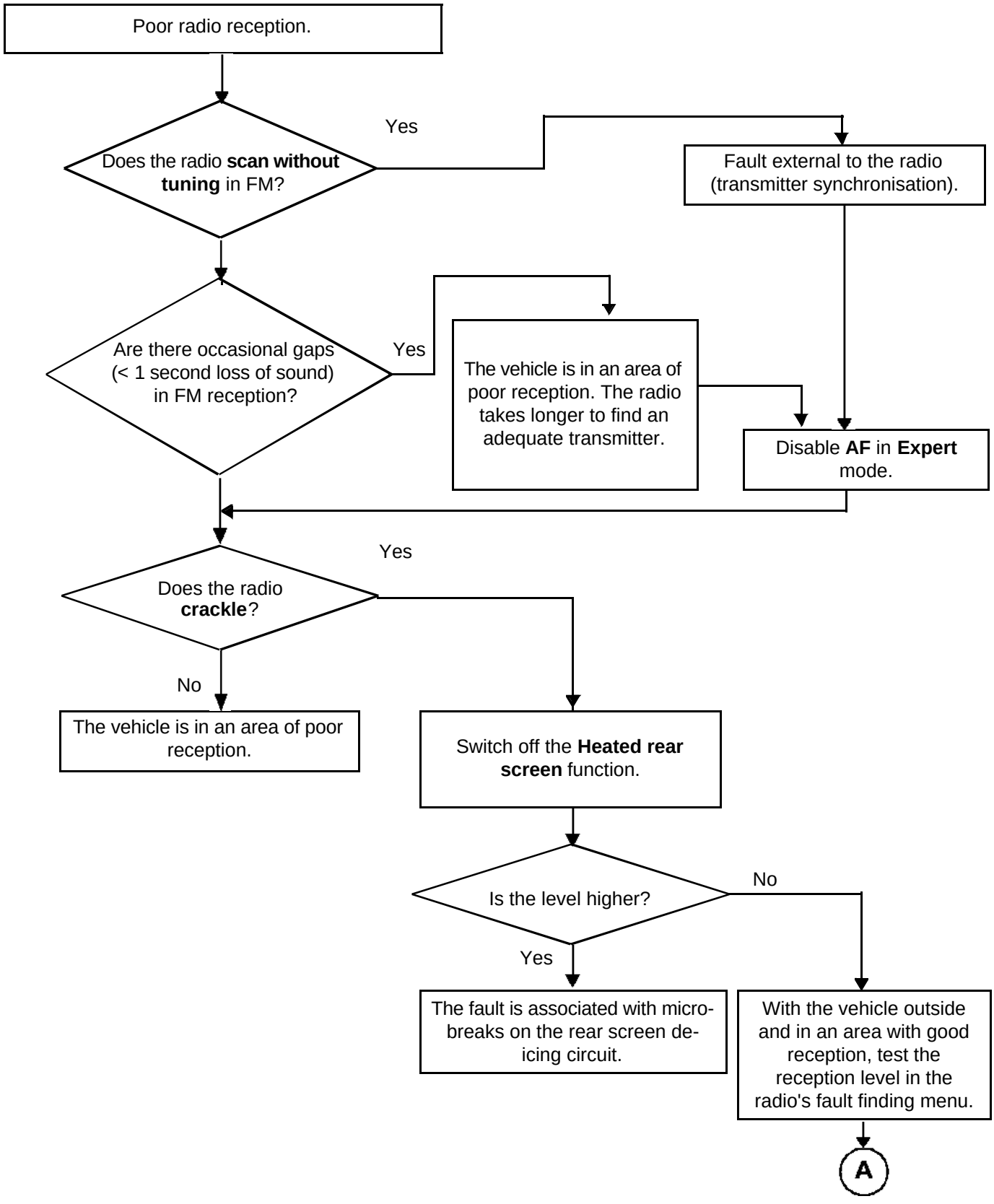

GETtheMANUALS.org

ALP 6 CONTINUED 1	

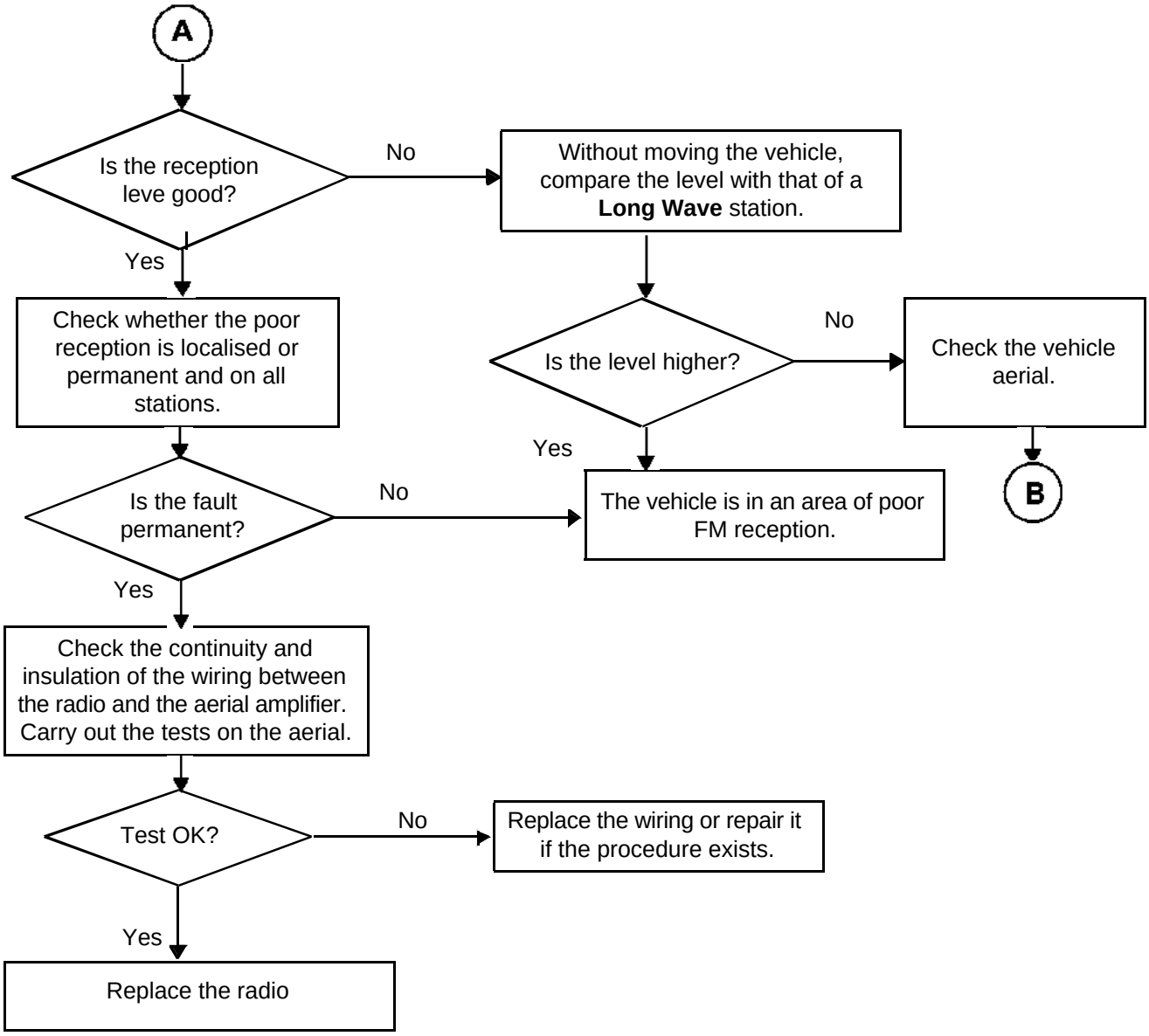

GETtheMANUALS.org

ALP 6
CONTINUED 2

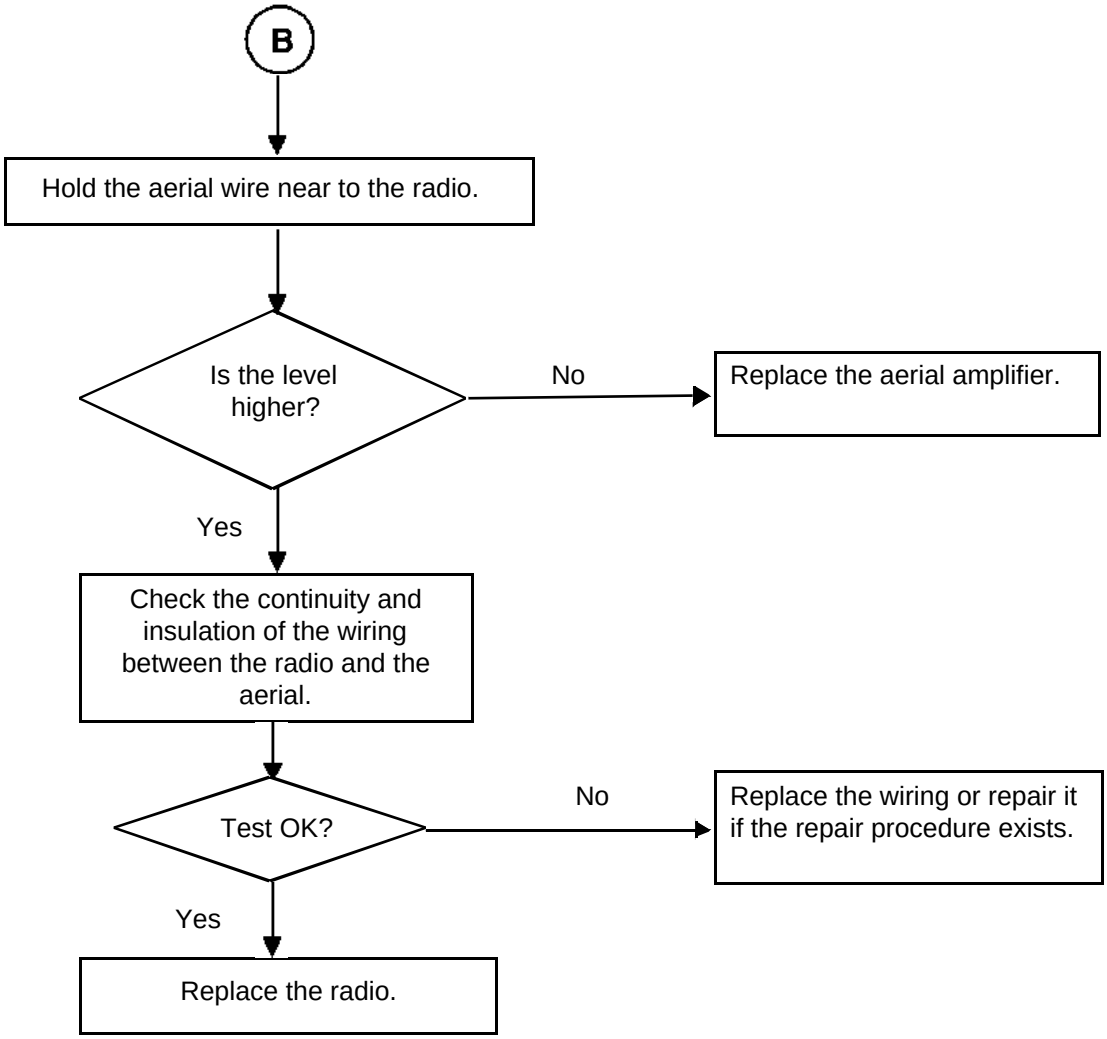

GETtheMANUALS.org

ALP 7	**The volume does not increase with the vehicle speed**.

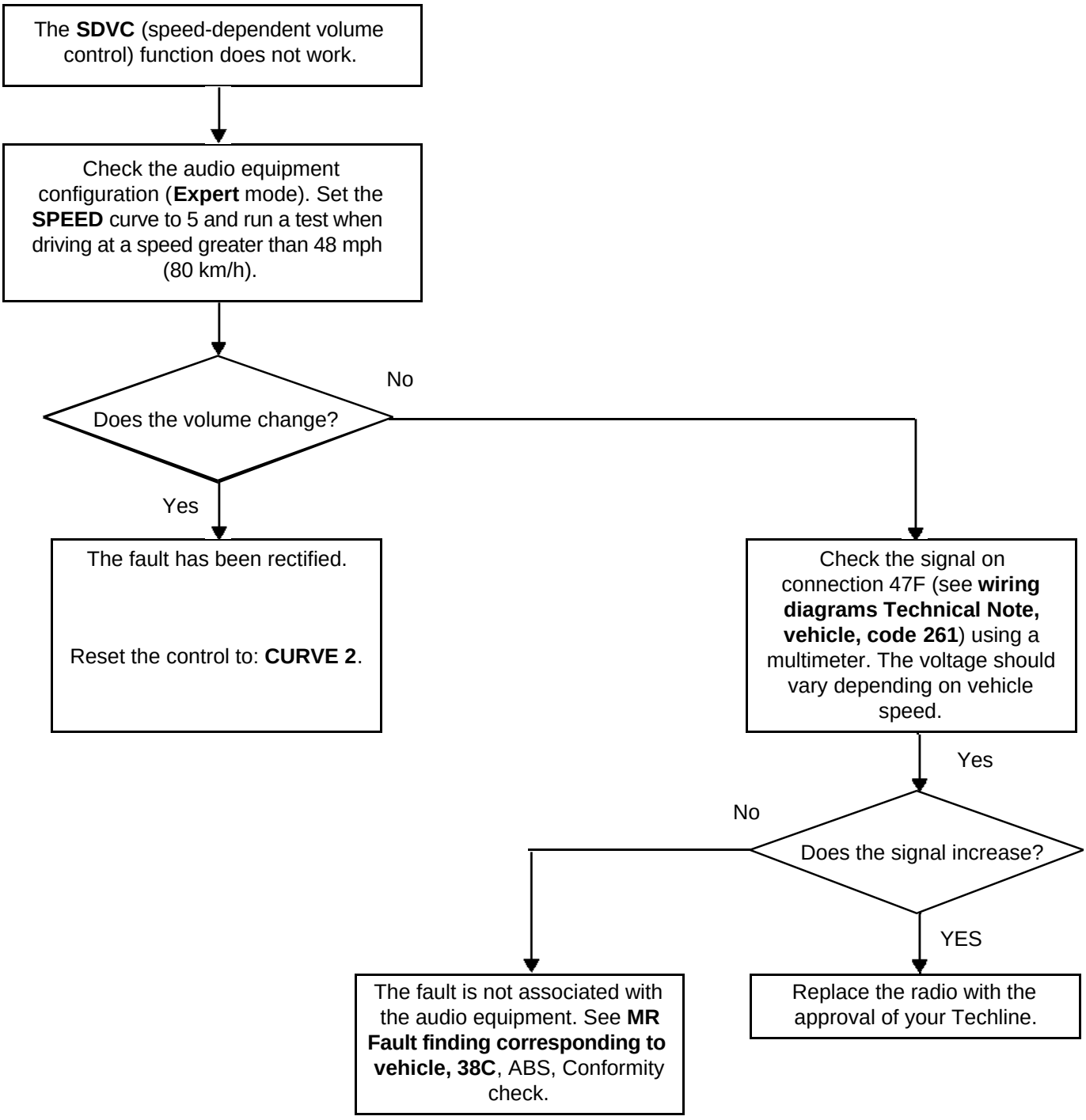

GETtheMANUALS.org

ALP 8	Lighting does not change when the vehicle lights are switched on

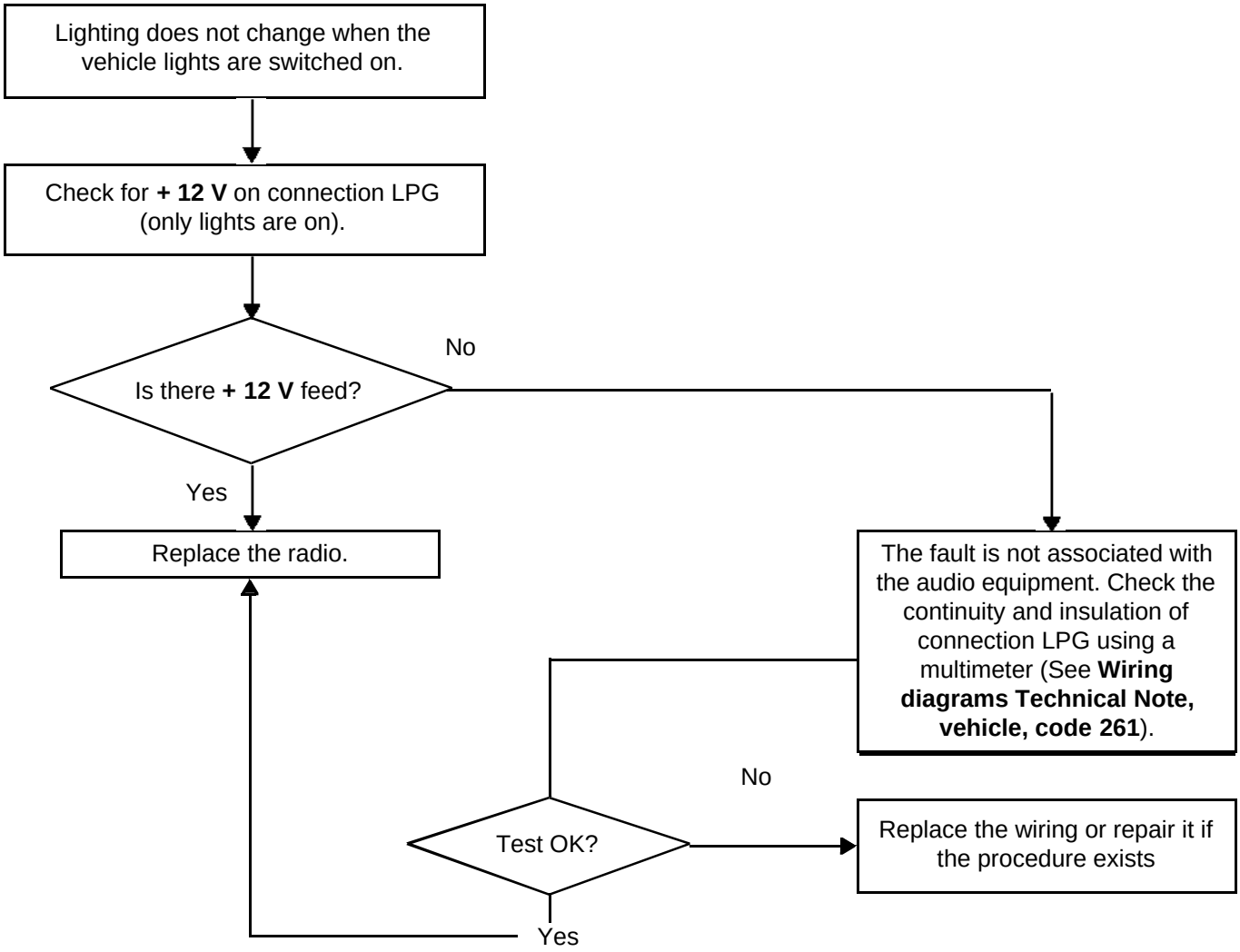

GETtheMANUALS.org

ALP 9	No sound muting during Carminat messages, voice synthesiser or hands-free kit

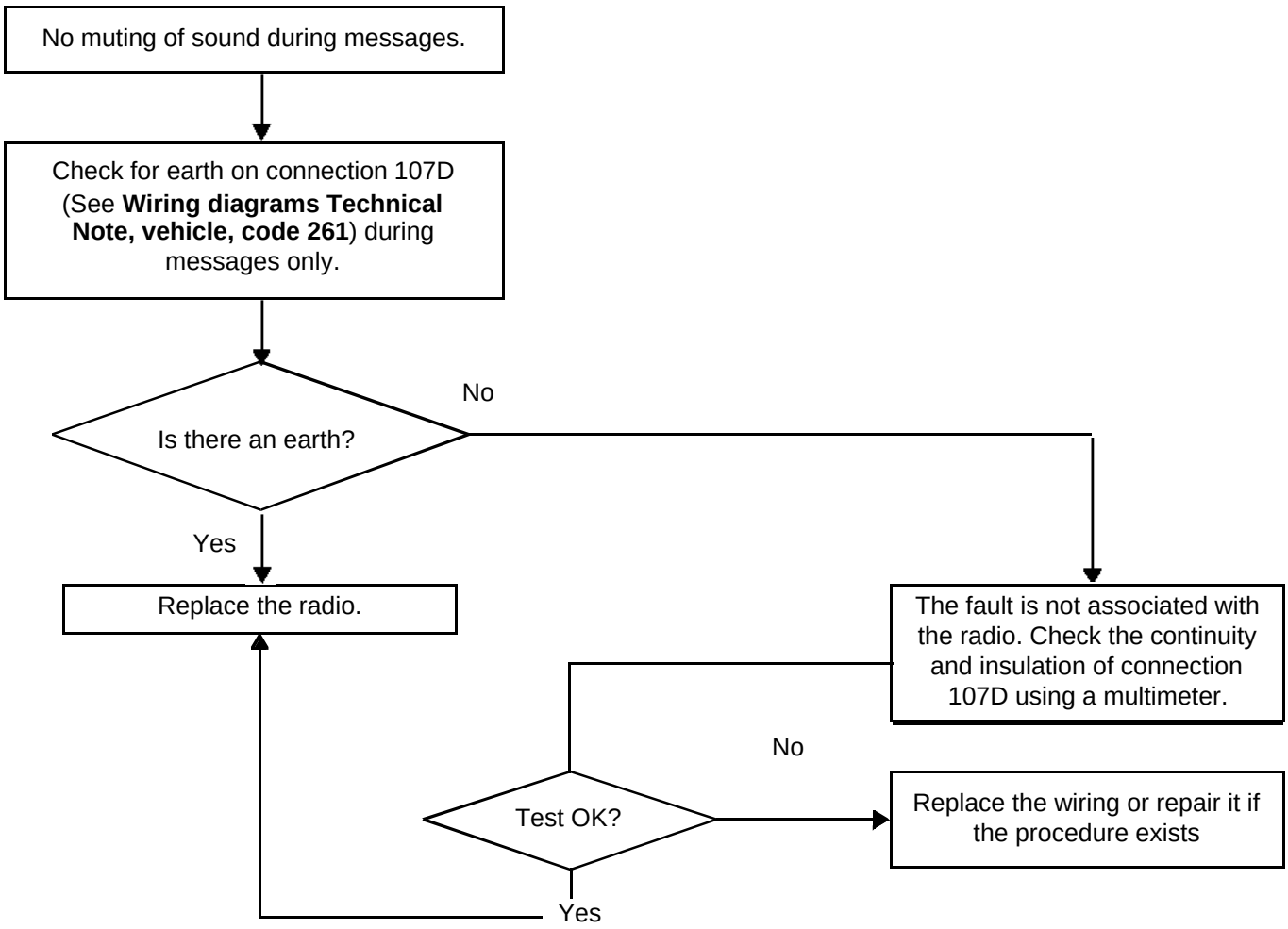

GETtheMANUALS.org

ALP 10	The infrared remote control does not operate (PN6)

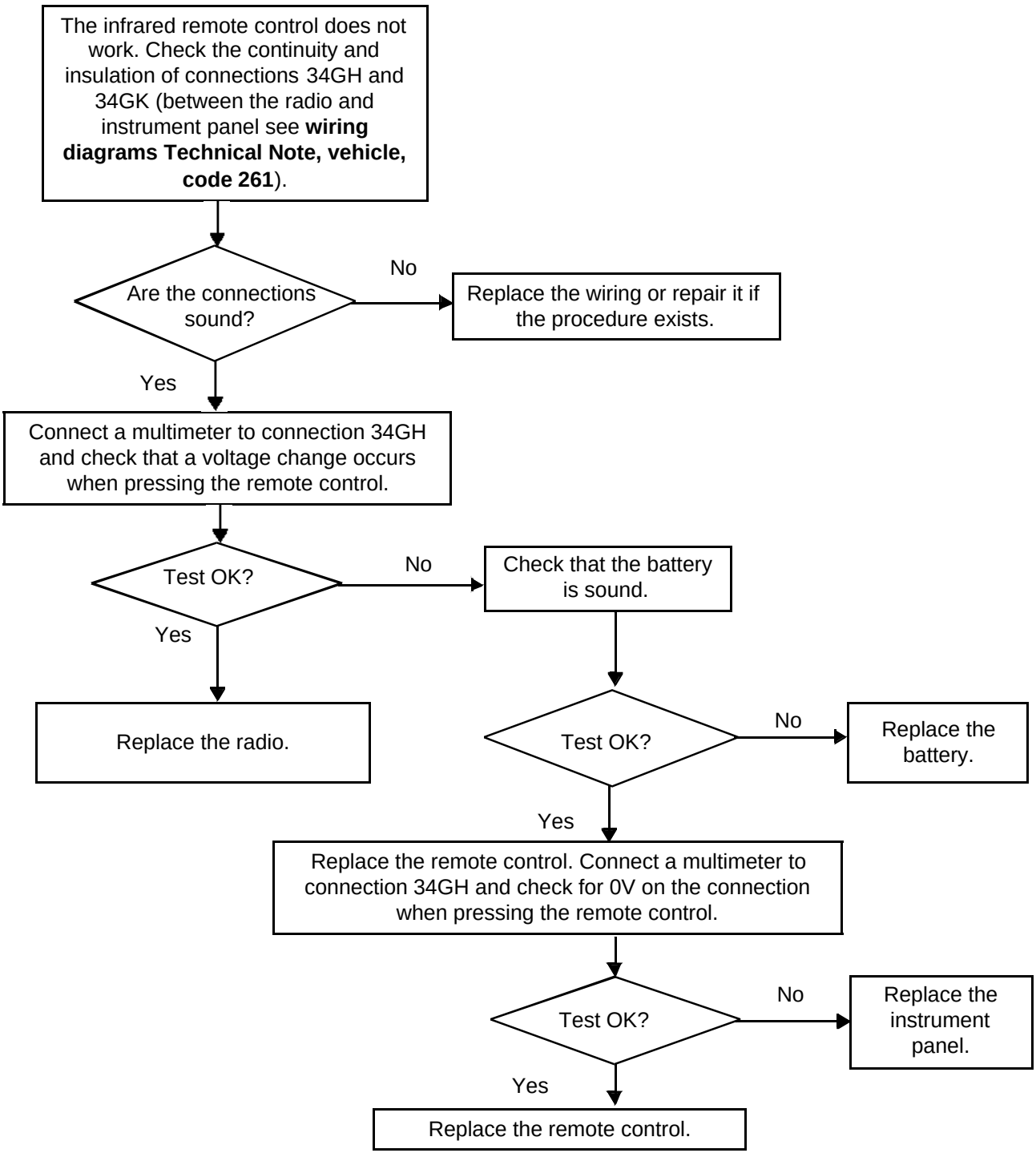

GETtheMANUALS.org

RADIO

First solution

If the electric ejector motor is operational, eject the CD using a **4.5 V** battery to supply the electric motor (**B**) (attach the + wire to contact (**1**) and the - wire to contact (**2**) when ejecting the CD).

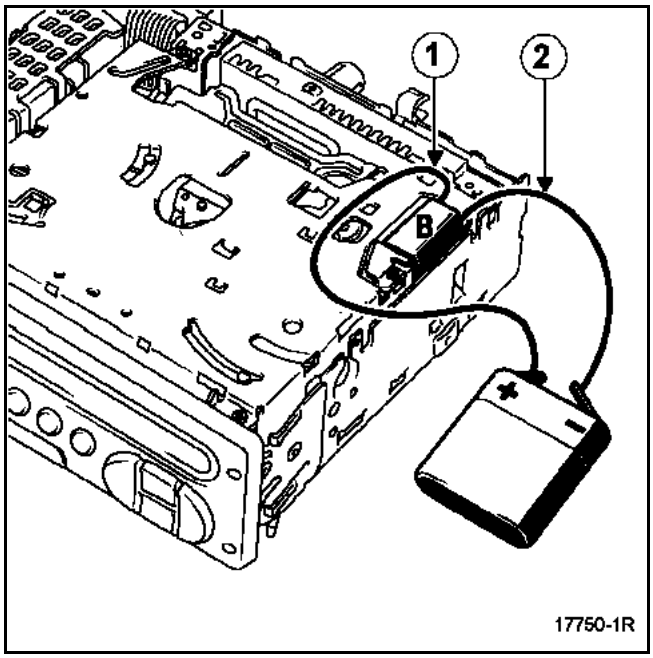

GETtheMANUALS.org

RADIO

Second solution

If the electric ejector motor is not operational, remove the bolt (**C**) and release the electric motor (**B**).

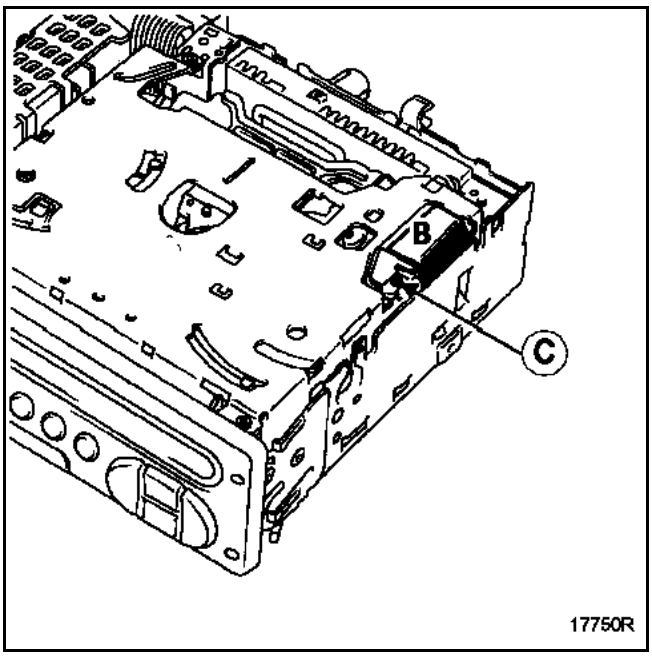

Turn toothed wheel (**D**) by hand in a clockwise direction until the CD is ejected.

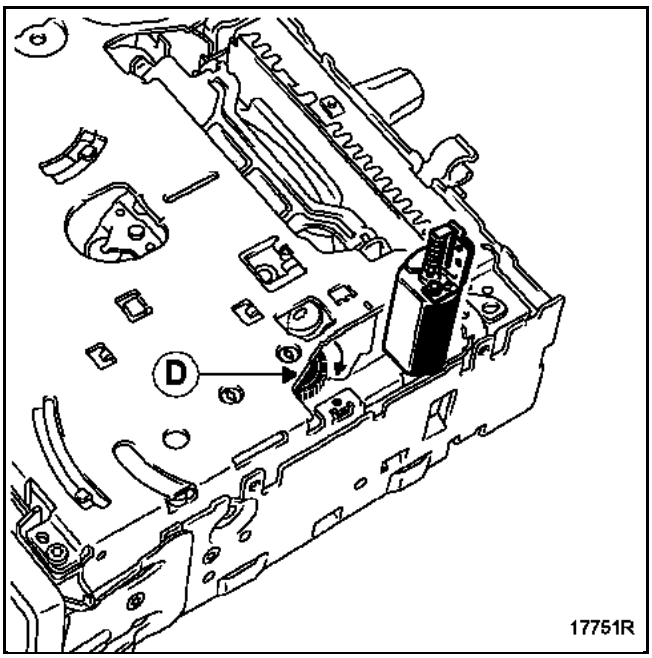

Before replacing the radio:

- refit the electric motor and attach it using the bolt (second solution only),
- refit the casing.

GETtheMANUALS.org

CHANGER IN THE DASHBOARD

REMOVAL

Remove the two bolts (**A**).

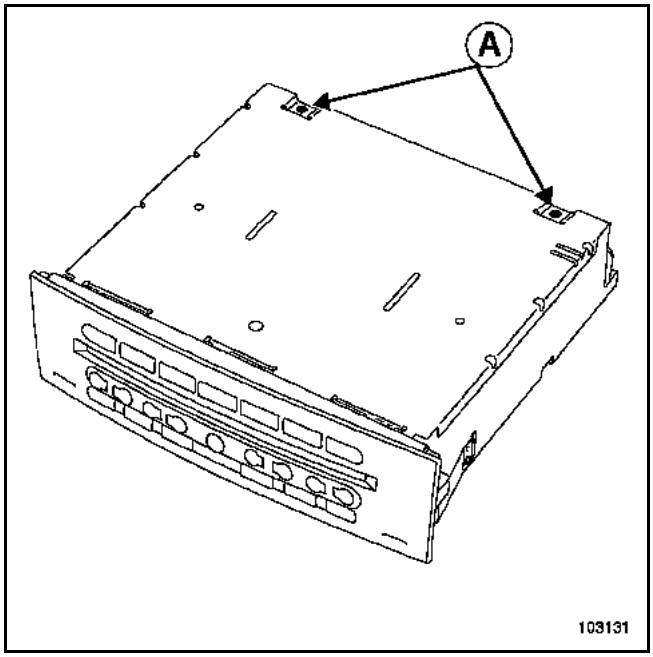

Turn the CD changer upside down.
Remove the 6 bolts (**B**).

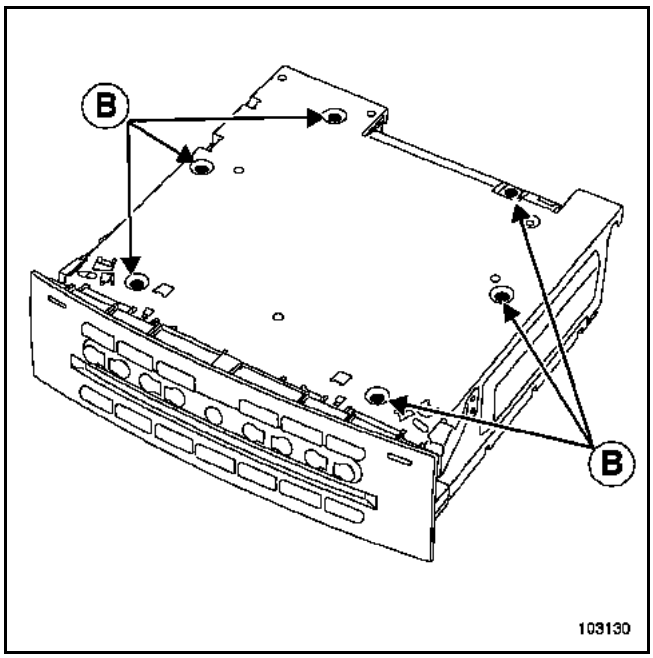

Turn the CD changer upside down.
Remove the cover.

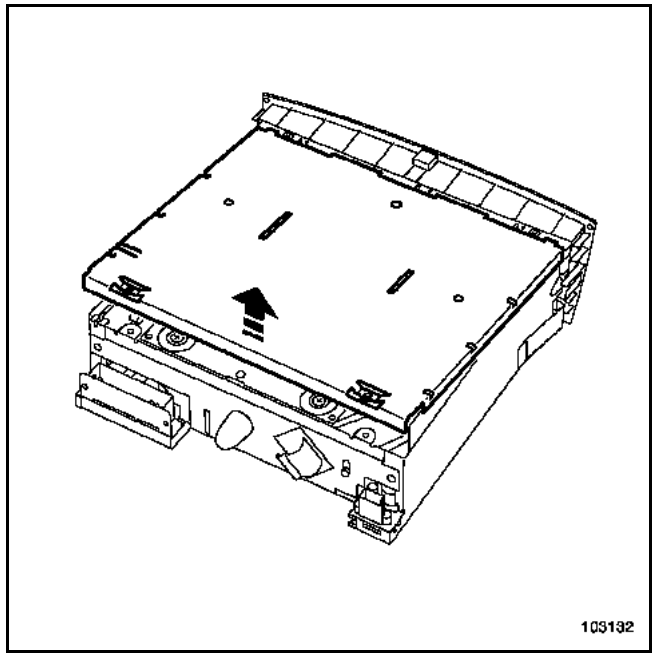

Remove the mechanism from its housing.

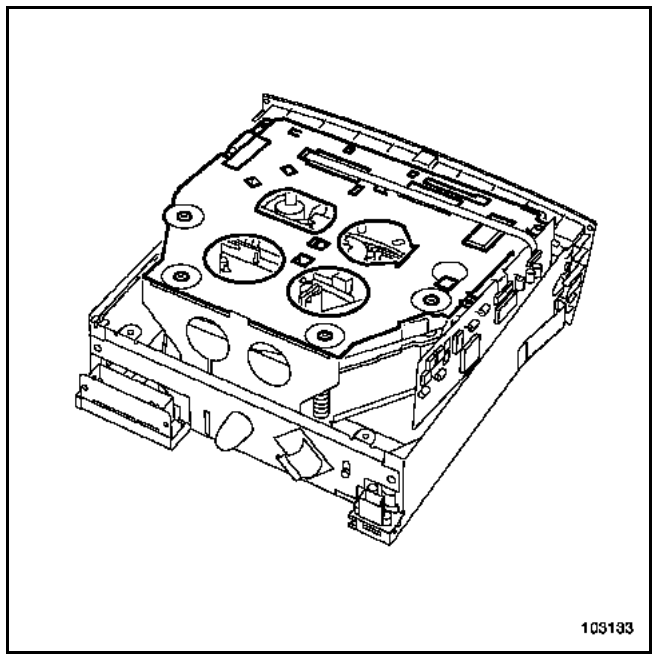

GETtheMANUALS.org

CHANGER IN THE DASHBOARD

Remove the two bolts (**C**).

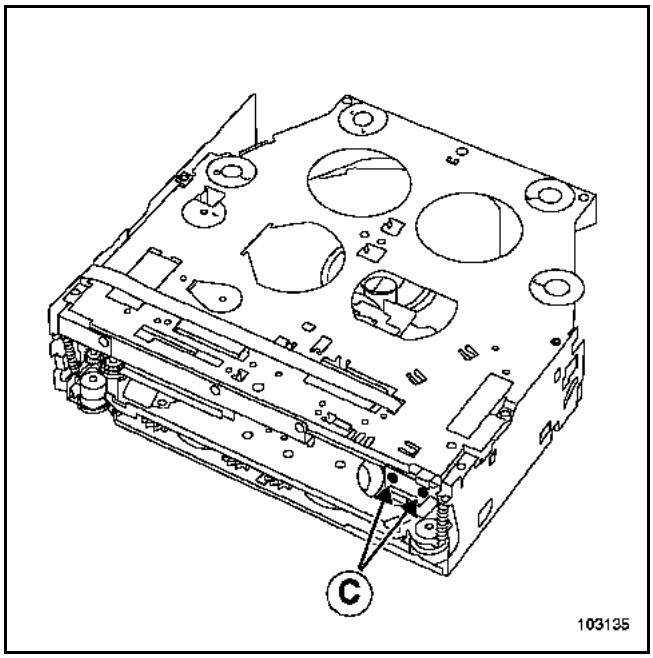

Remove the CD guide arm.
Disconnect connector (**D**).

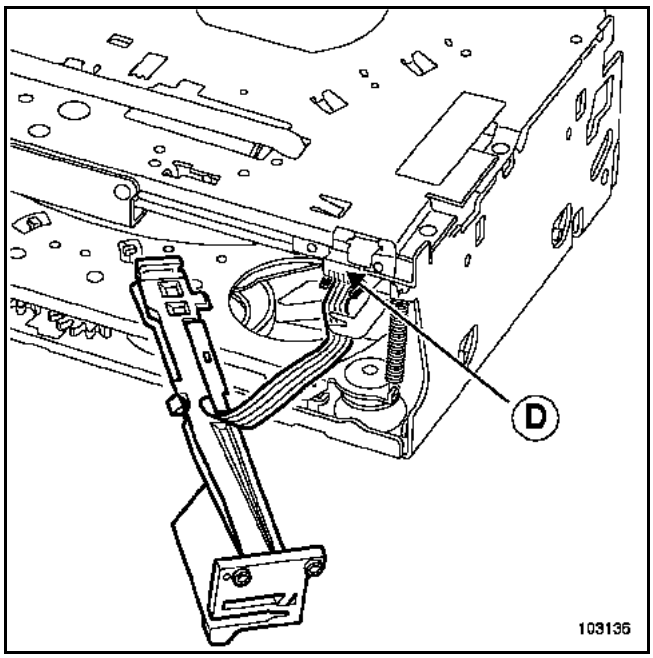

Remove the eight bolts (**E**),

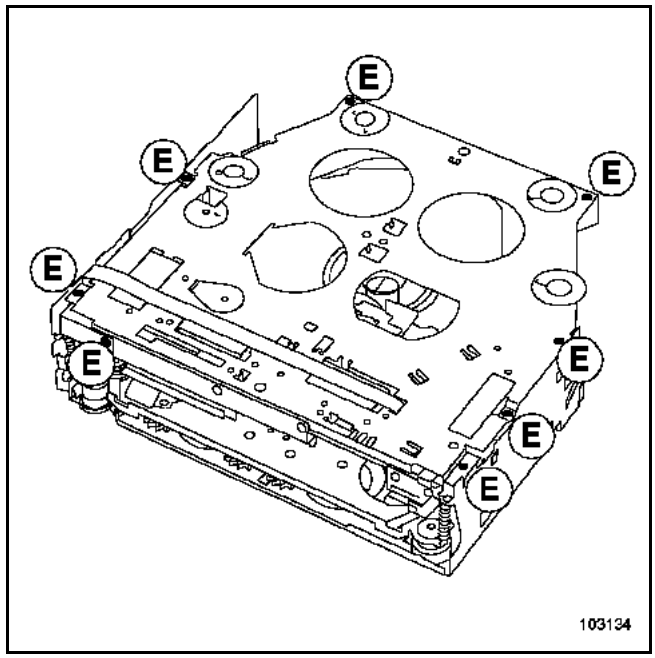

Remove both clips from the two connectors.

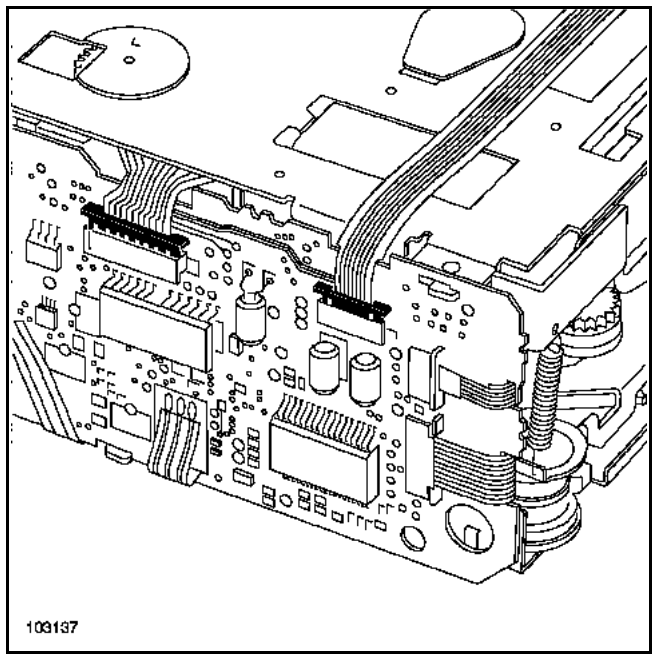

GETtheMANUALS.org

CHANGER IN THE DASHBOARD

Remove both ribbon cables.

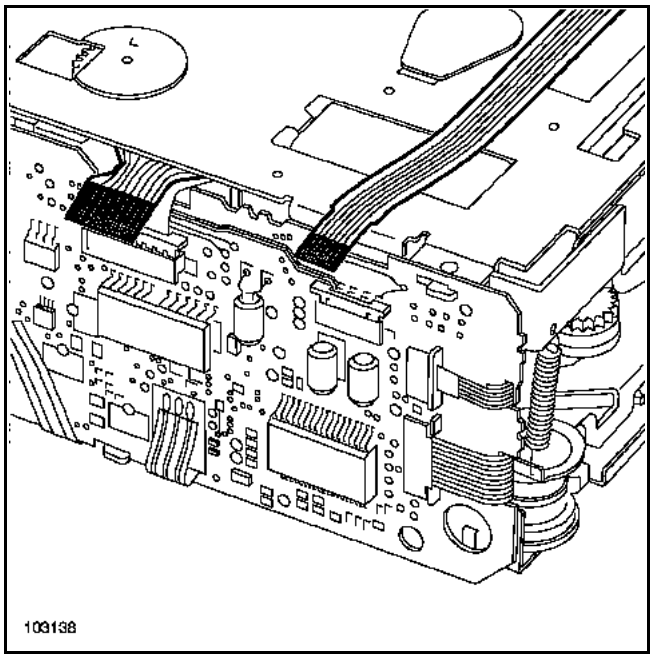

Remove the upper section of mechanism.

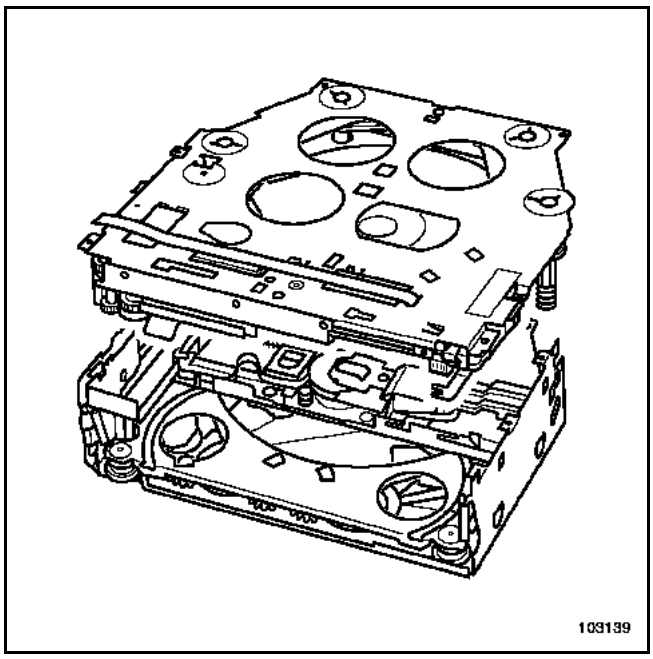

Turn the guides and push the mechanism as shown in the diagram in order to raise or lower the CDs.

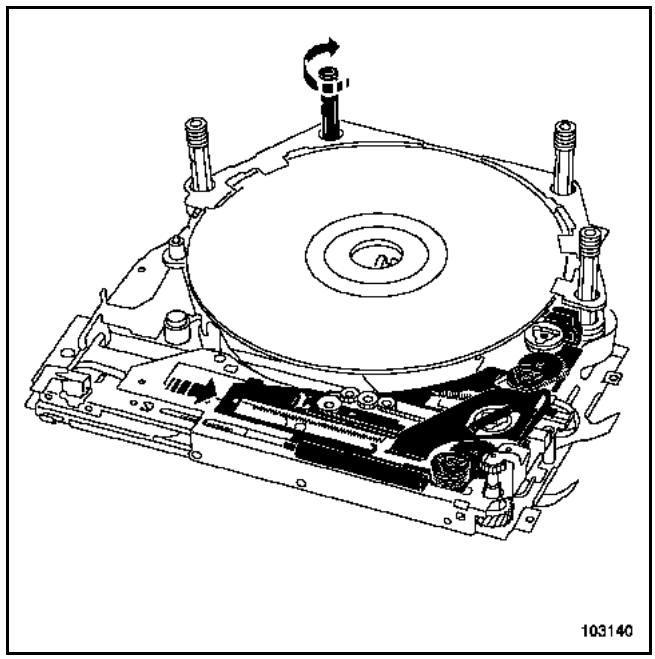

The CDs can now be accessed.

IMPORTANT
Never refit the changer mechanism once it has been removed.

GETtheMANUALS.org

CHANGER IN THE BOOT

Remove:
– the three bolts (**1**) located underneath the unit,

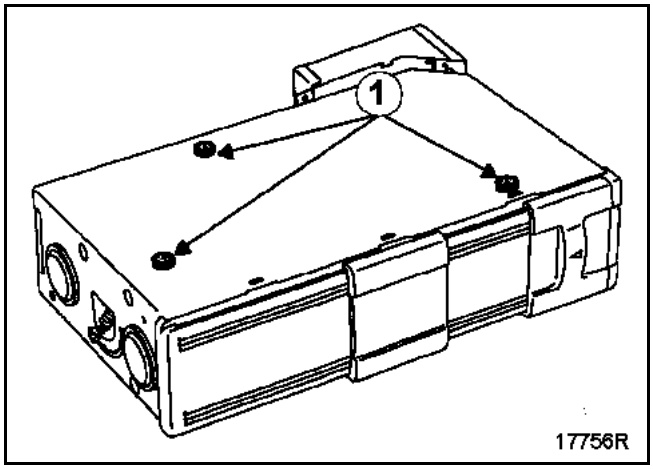

– the two springs (**2**) after bringing them to the upper position,

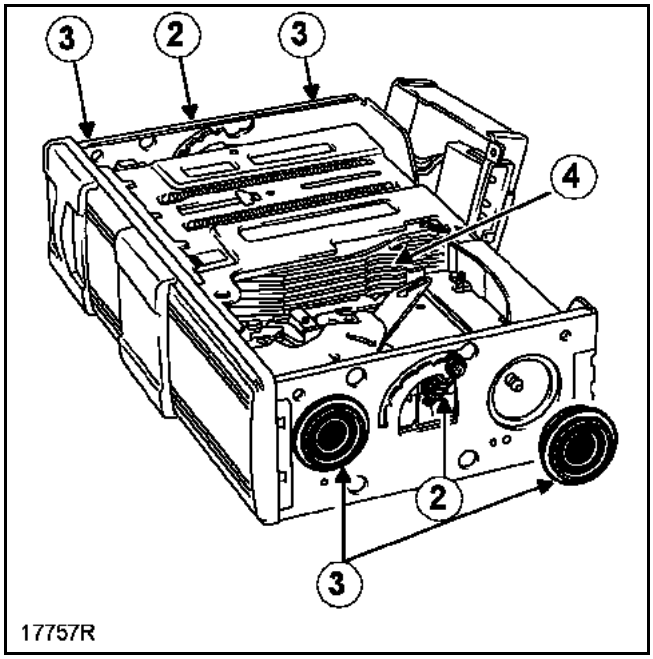

– the four dampers (**3**) (clipped on).

Remove the electronic module from the mounting and place it to the side.

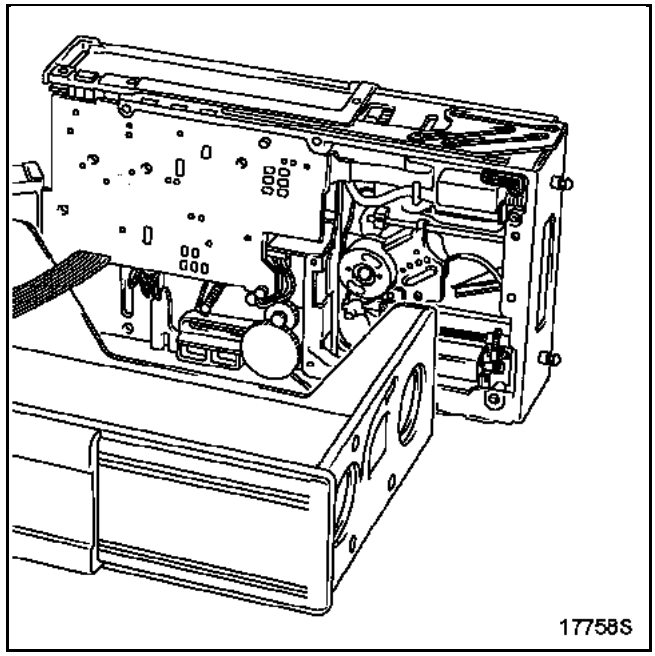

First solution

If the electric motors are operating:

1 Reinsert the CD and its drawer into the changer (**4**) using a 4.5 V battery to supply the electric motor (**3**), (attach the + wire to contact (**1**) and the - wire to contact (**2**)).
2 Eject the changer by moving lever (**4**).

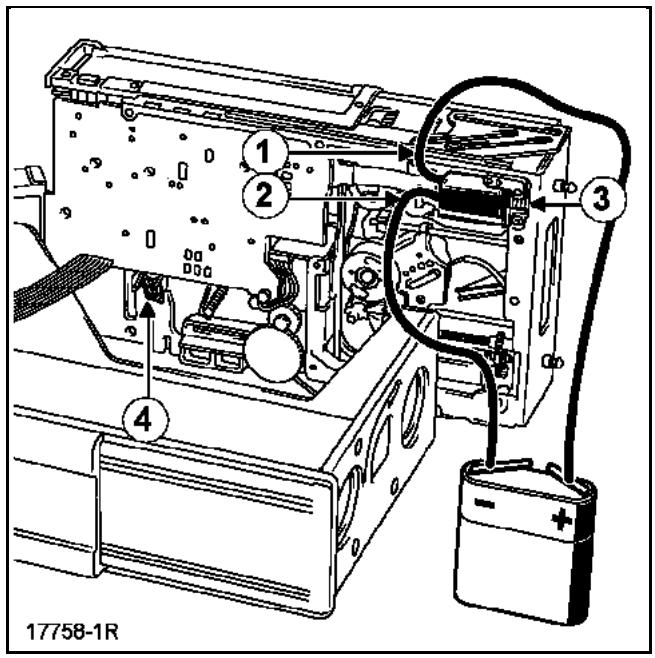

GETtheMANUALS.org

CHANGER IN THE BOOT

Second solution

If the electric motors are not operational:

1 To reinsert the CD and its drawer into changer (**5**), remove the pinion mounting (**6**) by its bolt,

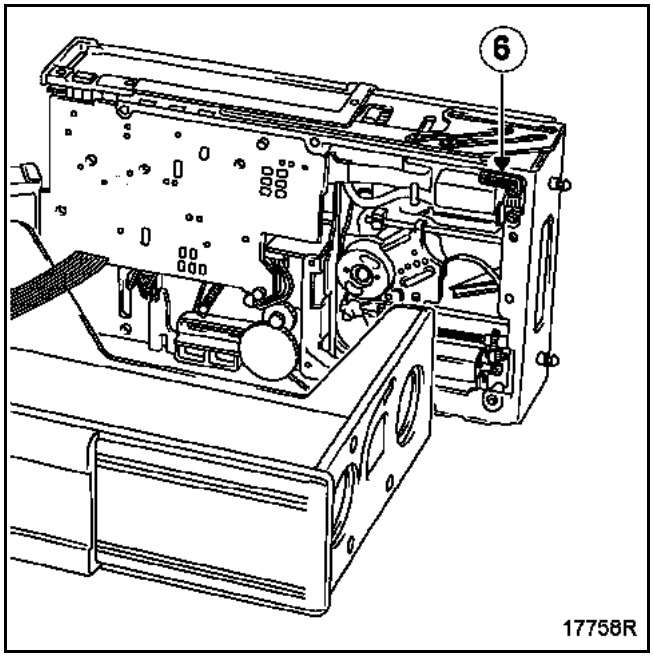

turn the toothed wheel (**7**) by hand in an anticlockwise direction until the drawer is turned completely upside down in the changer (**5**).

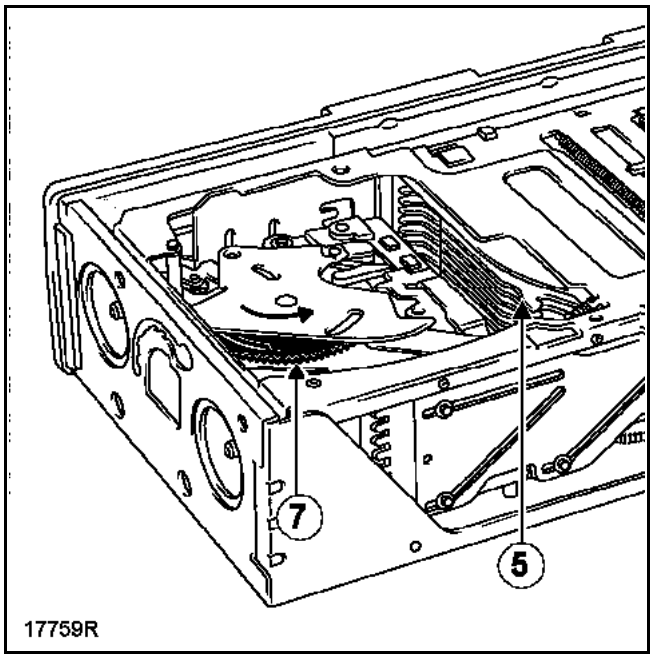

2 Eject the CD changer by moving the lever (**8**).

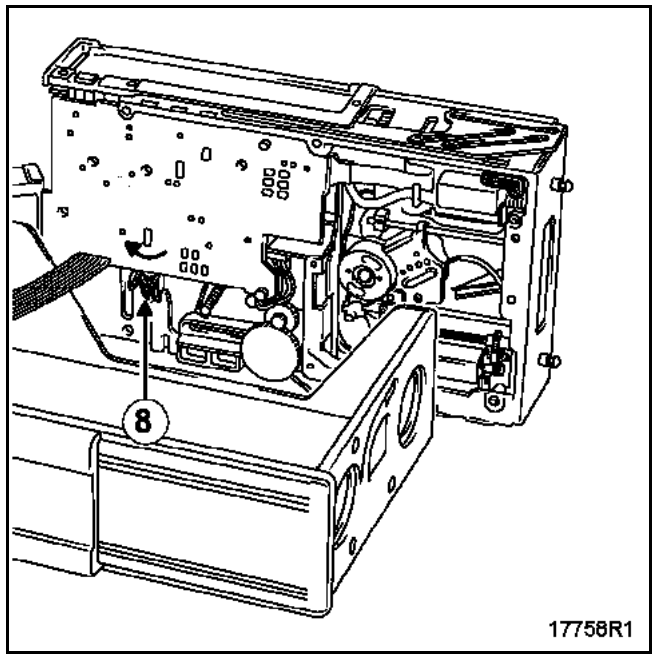

Before replacing the radio:

- refit the module in its unit, replace the four dampers and the two springs,
- attach the module to the unit using the three bolts,
- re-close the changer, attach its cover and refit the rear section.

GETtheMANUALS.org

VEL SATIS

8 Electrical equipment

86B CAR PHONE

Vdiag No: 04

Fault finding - Introduction	86B - 2
Fault finding - System operation	86B - 7
Fault finding - Allocation of computer tracks	86B - 10
Fault finding - Replacement of components	86B - 13
Fault finding - Configurations and programming	86B - 14
Fault finding - Fault summary table	86B - 15
Fault finding - Interpretation of faults	86B - 16
Fault finding - Conformity check	86B - 32
Fault finding - Status summary table	86B - 36
Fault finding - Interpretation of statuses	86B - 37
Fault finding - Parameter summary table	86B - 51
Fault finding - Interpretation of parameters	86B - 52
Fault finding - Command summary table	86B - 55
Fault finding - Interpretation of commands	86B - 56
Fault finding - Customer complaints	86B - 65
Fault finding - Fault finding charts (ALPs)	86B - 66

V2 **Edition Anglaise**

"The repair procedures given by the manufacturer in this document are based on the technical specifications current when it was prepared.

The procedures may be modified as a result of changes introduced by the manufacturer in the production of the various component units and accessories from which his vehicles are constructed."

All rights reserved by Renault s.a.s.

Copying or translating, in part or in full, of this document or use of the service part reference numbering system is forbidden without the prior written authority of Renault s.a.s.

© Renault s.a.s.

GETtheMANUALS.org

1. SCOPE OF THIS DOCUMENT

This document presents the fault finding procedure applicable to all computers with the following specifications:

Vehicle(s): **Velsatis Phase 1 and 2** *Function concerned:* **Car phone**	*Name of computer:* **Integrated Hands-Free Phone** *Vdiag No.:* **04**

2. PREREQUISITES FOR FAULT FINDING

Documentation type

Fault finding procedures (this manual):
– Assisted fault finding (integrated into the diagnostic tool), Dialogys.
Wiring Diagrams:
– Visu-Schéma (CD-ROM), paper.

Type of diagnostic tools

– CLIP

Special tooling required

Special tooling required	
	Multimeter
Elé. 1681	Computer connection bornier
Elé. 1737	Test adapter

3. RECAP

Procedure

To save energy, the Velsatis Phase 1 and 2 UCH interrupts the + after ignition feed after 3 minutes have elapsed.

When performing fault finding on a computer, it is possible to force the + after ignition feed for 1 hour by applying the following procedure:
– Press the card unlocking button,
– insert the card in the reader,
– press the Start button (interrupting the timed + after ignition feed mode),
– press and hold the Start button for over 5 seconds until the engine immobiliser warning light starts to flash rapidly (4 Hz).

This forced + after ignition feed mode remains active for 1 hour.
Pressing the Start button or removing the card from the reader cuts off the forced + after ignition feed but does not cut off the timed forced + after ignition feed mode. As long as one hour has not elapsed the + after ignition feed function restarts the forced + after ignition feed for the remaining time.

GETtheMANUALS.org

Faults

Faults are declared as either present or stored (depending on whether they appeared in a certain context and have disappeared since, or whether they remain present but have not been diagnosed within the current context).

The **present** or **stored** status of faults should be taken into consideration when the diagnostic tool is switched on after the + after ignition feed (without any system components being active).

For a **present fault**, apply the procedure described in the **Interpretation of faults** section.

For a **stored fault**, note the faults displayed and apply the instructions in the **Notes** section.

If the fault is **confirmed** when the instructions in the Notes section are applied, the fault is present. Deal with the fault

If the fault is **not confirmed**, check:
- the electrical lines which correspond to the fault,
- the connectors for these lines (for oxidation, bent pins, etc.),
- the resistance of the component detected as faulty,
- the condition of the wires (melted or split insulation, wear).

Conformity check

The aim of the conformity check is to check data that does not produce a fault on the diagnostic tool because the data is inconsistent. Therefore, this stage is used to:
- carry out fault finding on faults that do not have a fault display, and which may correspond to a customer complaint.
- check that the system is operating correctly and that there is no risk of a fault recurring after repairs.

This section gives the fault finding procedures for statuses and parameters and the conditions for checking them.

If a status is not behaving normally or a parameter is outside the permitted tolerance values, consult the corresponding fault finding page.

Customer complaints - Fault finding chart

If the test with the diagnostic tool is OK but the customer complaint is still present, the fault should be processed by **customer complaint**.

A synopsis of the general procedure to follow is provided on the following page in the form of a flow chart.

GETtheMANUALS.org

4. FAULT FINDING PROCEDURE

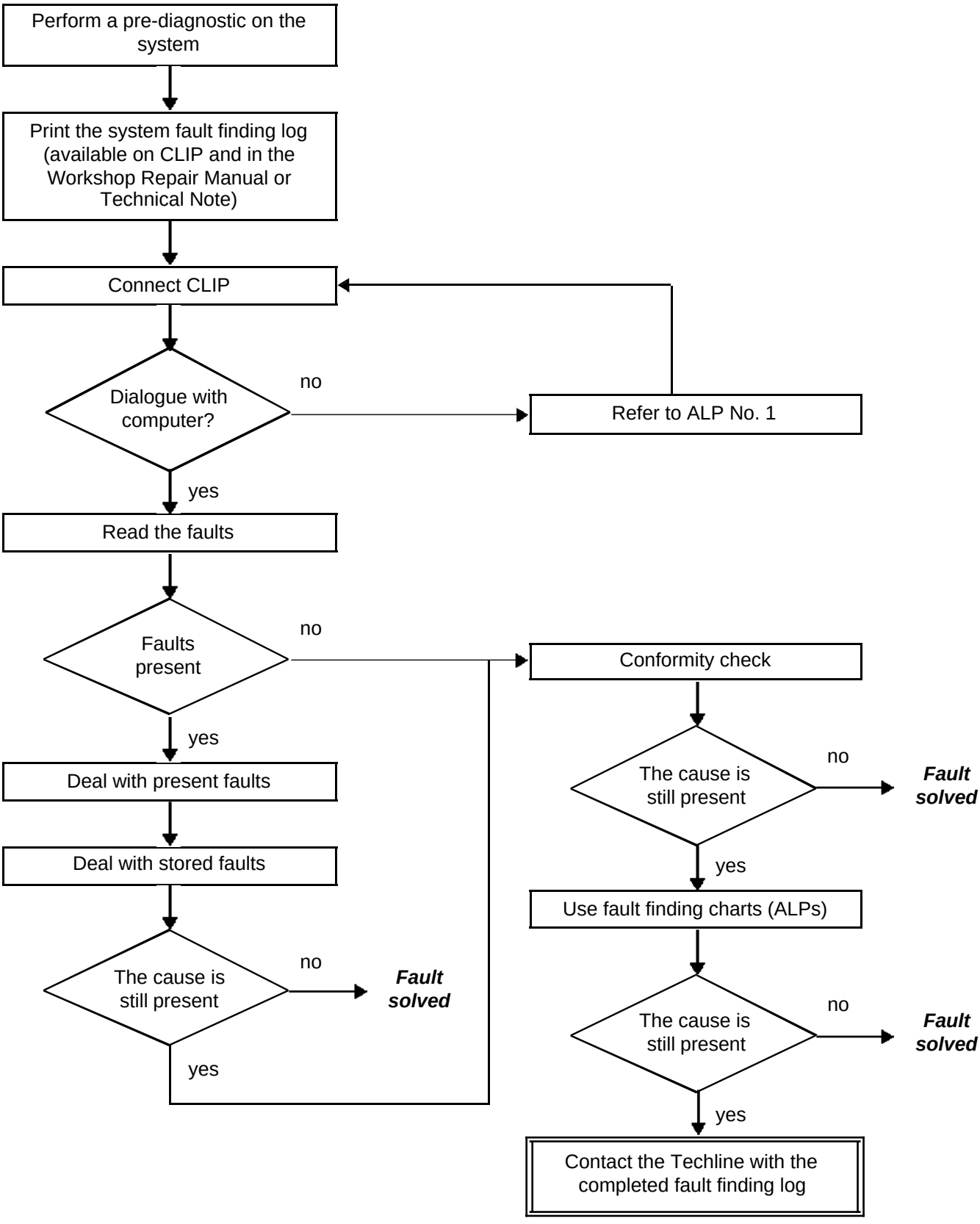

GETtheMANUALS.org

4. FAULT FINDING PROCEDURE (continued)

Wiring check

Fault finding problems
Disconnecting the connectors and/or manipulating the wiring harness may temporarily remove the cause of a fault.
Electrical measurements of voltage, resistance and insulation are generally correct, especially if the fault is not present when the analysis is made (stored fault).

Visual inspection
Look for damage under the bonnet and in the passenger compartment.
Carefully check the fuses, insulators and wiring harness routing.
Look for signs of oxidation.

Tactile inspection
While manipulating the wiring harness, use the diagnostic tool to note any change in fault status from stored to present.
Make sure that the connectors are properly locked.
Apply light pressure to the connectors.
Twist the wiring harness.
If there is a change in status, try to locate the source of the fault.

Inspection of each component
Disconnect the connectors and check the appearance of the clips and tabs, as well as the crimping (no crimping on the insulating section).
Make sure that the clips and tabs are properly locked in the sockets.
Check that no clips or tabs have been dislodged during connection.
Check the clip contact pressure using an appropriate model of tab.

Continuity and insulation check
Check the continuity of entire lines, then section by section.
Look for a short circuit to earth, to **+ 12 V** or to another wire.

If a fault is detected, repair or replace the wiring harness.

GETtheMANUALS.org

5. FAULT FINDING LOG

IMPORTANT

IMPORTANT
Any fault on a complex system requires thorough fault finding with the appropriate tools. The FAULT FINDING LOG, which should be completed during the procedure, enables you to keep track of the procedure which is carried out. It is an essential document when consulting the manufacturer.

IT IS THEREFORE MANDATORY TO FILL OUT A FAULT FINDING LOG EACH TIME FAULT FINDING IS CARRIED OUT.

You will always be asked for this log:

- when requesting technical assistance from Techline,
- for approval requests when replacing parts for which approval is mandatory,
- to be attached to monitored parts for which reimbursement is requested. The log is needed for warranty reimbursement, and enables better analysis of the parts removed.

6. SAFETY ADVICE

Safety rules must be observed during any work on a component to prevent any damage or injury:

– check the battery voltage to avoid incorrect operation of computer functions,
– Use the proper tools.

GETtheMANUALS.org

WARNING
Only use this fault finding manual if the vehicle is not fitted with a Carminat navigation and communication system.
Fault finding is performed on the Hands-Free Telephone integrated Control system using the telephone icon on the diagnostic tool desktop
This application must never be opened at the same time as the CLIP application (RENAULT icon) and inversely, never open the CLIP application (RENAULT icon) at the same time as the Hands-Free Kit (HFK) fault finding.

Note:
The **Integrated Hands-Free Telephone** system is also called the **M**odified **H**ands **F**ree **K**it (HFK).

FUNCTIONS CARRIED OUT BY THE HANDS-FREE KIT:

The **H**ands **F**ree **K**it system allows the customer to use their telephone in hands-free mode (without holding the telephone).
The customer can use their telephone in two ways: with the radio satellite control buttons or with the voice recognition mode (if configured: see **Configurations and programming**).
For more information, consult the user manual for the **H**ands **F**ree **K**it.

The **H**ands **F**ree **K**it system is used for the following functions:
– to receive or make calls,
– to alter the volume of calls (by deleting echo and reducing unwanted noise),
– to scroll through the telephone functions (directory, calls received, etc.) using the satellite control or voice recognition,
– to display the telephone screen information on the vehicle display,
– to recharge the telephone battery (using the telephone cradle),
– to use the vehicle's aerial for improved call reception,
– to use the vehicle's speakers instead of the telephone's speaker,
– to switch the radio off when making or receiving calls.

GETtheMANUALS.org

CONTENTS OF THE HANDS-FREE KIT SYSTEM

The system is made up of the following components:
– a computer (**Hands-Free Kit**),
– a telephone cradle (telephone adapter) fitted onto the vehicle base plate,
– a vehicle base plate designed to hold the telephone cradle (i.e. the part fitted onto the base of the centre console),
– a microphone (between the sun visors),
– a call button (a button at the end of the indicator stalk),
– the customer's telephone (specific models: see Owner's Manual).

The system uses radio components on the vehicle:
– radio;
– satellite control under the steering wheel,
– display,
– vehicle speakers,
– radio aerial.

Note:
A test adapter (Elé. 1737) is used to check the conformity of serial and audio connections between the telephone cradle and the computer. This adapter is used with the **VP005 Series connections tests** and **VP006 Audio connections tests** commands (see interpretation of these commands).

GETtheMANUALS.org

SYSTEM DESCRIPTION

The Hands-Free Kit system allows the customer's mobile telephone resources to be used via the vehicle's multimedia equipment (Radio, Display, Satellite control, Microphone). The Velsatis Phase II Hands-Free Kit system is never fitted with a navigation system and can be fitted with two different types of radio:

Without navigation:
– Top of the range Auditorium radio without navigation (PN6) and with or without a C.D. multi-changer.
– Middle of the range radio without navigation (NR5) and without a C.D. multi-changer.

Note:
The vehicle can be fitted with a navigation system as well as the Carminat Navigation and Communication system which has a different computer to the one dealt with in this document. Fault finding can also be run on this computer. In the event of a fault with the Hands-Free Kit on a vehicle fitted with the navigation system, refer to the section on Carminat Navigation and Communication system fault finding.

FLOWCHART FOR SYSTEM WITHOUT NAVIGATION

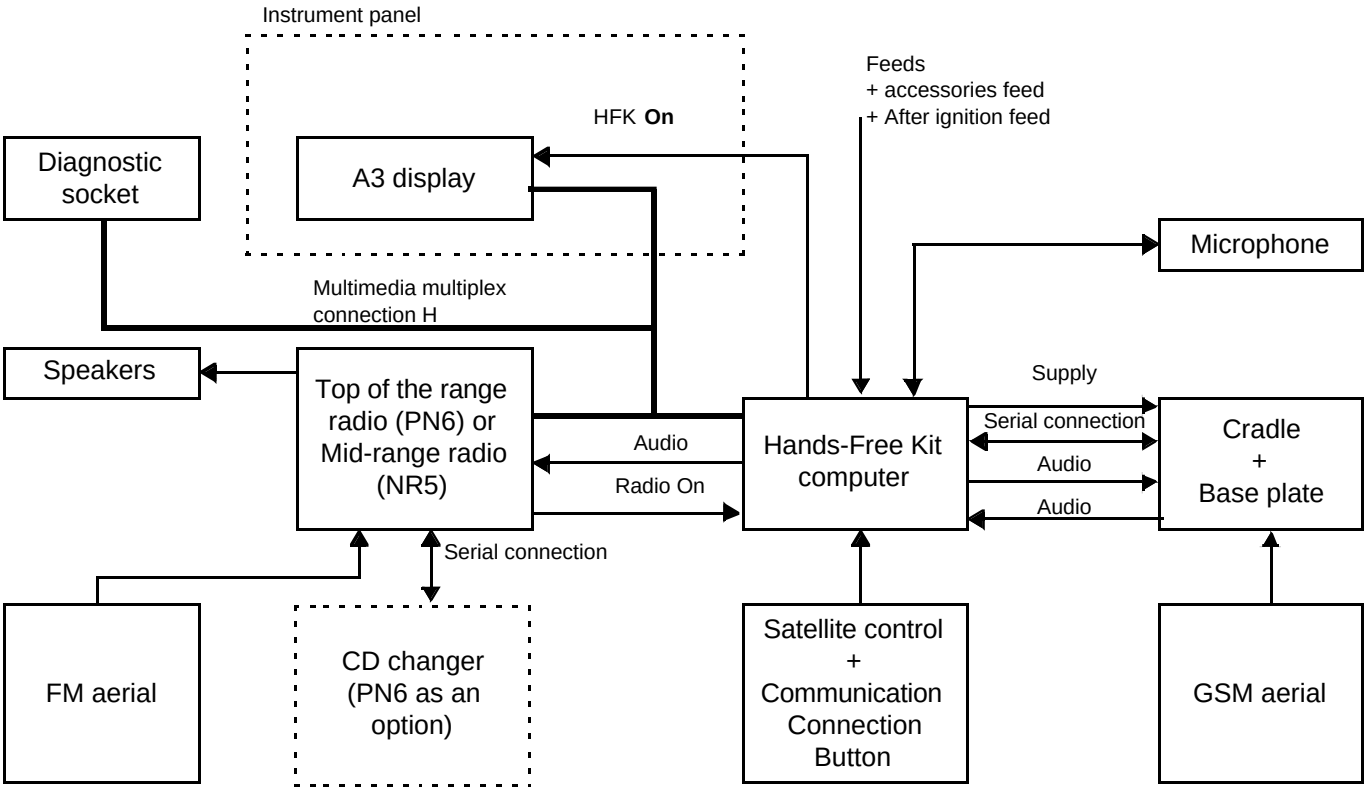

HFK On: Signal that activates the display.

Radio On: Signal that activates the Hands-Free Kit (except with + Accessories feed) and therefore starts up the audio system.

GETtheMANUALS.org

HANDS-FREE KIT computer 40-track connector:

Computer track	Description	Destination	
1	Not used		
2	HFK ON (signal to activate display)	Display	
3	Not used		
4	**+ 12 V** before ignition feed	Unit fuse	
5	Not used		
6	**+ 12 V** accessories feed	Passenger compartment fuse box	
7	**+ 12 V** after ignition feed	Passenger compartment fuse box	
8	Not used		
9	**EARTH**	EARTH	
10	Not used		
11	**CAN L** multimedia 1	Radio	
12	Telephone shunt multiplex line L		
13	Not used		
14	**Multimedia multiplex connection H** 1	Radio	
15	Telephone shunt multiplex line H		
16	Not used		
17	Communication connection button	Lighting stalk	
18	RADIO ON (activating signal for the HFK)	Radio	
19	Not used		
20	Radio control connection (signal L0)	Track **B1**	Radio controls on steering wheel (satellite control)
21	Radio control connection (IN2 signal)	Track **A3**	
22	Radio control connection (L1 signal)	Track **B2**	
23	Radio control connection (IN0 signal)	Track **B3**	
24	Radio control connection (L2 signal)	Track **A2**	
25	Radio control connection (IN1 signal)	Track **A1**	
26	Not used		
27	Not used		
28	+ signal from the microphone	Track 2 microphone	
29	+ signal from the microphone	Track 1 microphone	
30	Not used		
31	Multiplex line H terminating resistance		
32	Not used		
33	Not used		
34	Multiplex line L terminating resistance		
35	Audio connection 5	Radio	
36	Not used		
37	Audio connection 6	Radio	
38	Audio connection shielding	Radio	
39	Not used		
40	Not used		

(shunts by wiring)

GETtheMANUALS.org

HANDS-FREE KIT computer 24-track connector:

Computer track	Description	Telephone base plate track
1	Not used	
2	Not used	
3	Audio connection 1	2
4	Audio connection 2	11
5	Audio connection shielding	
6	Audio connection 3	3
7	Audio connection 4	12
8	Not used	
9	Not used	
10	Not used	
11	Not used	
12	Not used	
13	+ 12 V telephone base plate	4
14	Telephone base plate EARTH	6
15	Not used	
16	Not used	
17	Serial connection 1	8
18	Serial connection 2	9
19	Not used	
20	Not used	
21	Serial connection 3	13
22	Serial connection 4	14
23	Not used	
24	Not used	

GETtheMANUALS.org

Telephone base plate 14-track connector:

Telephone base plate track	Description	HFK computer track
1	Not used	
2	Audio connection 1	3
3	Audio connection 3	6
4	+ 12 V telephone base plate	13
5	Not used	
6	Telephone base plate EARTH	14
7	Not used	
8	Serial connection 1	17
9	Serial connection 2	18
10	Not used	
11	Audio connection 2	4
12	Audio connection 4	7
13	Serial connection 3	21
14	Serial connection 4	22

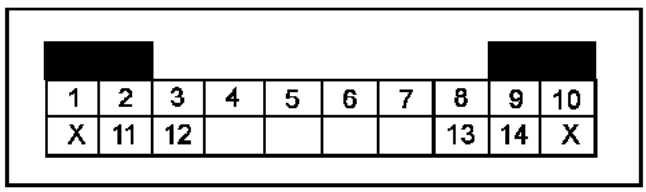

Illustration of the 14-Track connector coming from the telephone base plate (Front view).

Illustration of the 6-Track Black connector from the steering wheel satellite control:

View of the remote control:

A1	A2	A3
B1	B2	B3

ACTION	Track
Lower button (mode/OK)	A3/B1
Volume decrease	B3/B1
Volume increase	A1/B1
Telephone button	A3/B2
Audio source button	B3/B2
Tumblewheel (1st position)	A3/A2
Tumblewheel (2nd position)	B3/A2
Tumblewheel (3rd position)	A1/A2

GETtheMANUALS.org

WARNING
Before replacing the Hands-Free Phone Kit computer, check that it is faulty (read faults, conformity of variables, read customer complaints). Computer replacement is subject to authorisation by the Techline after a fault finding log has been completed and submitted.

Replacing the Hands-Free Phone computer:
- Note the computer configuration according to the optional equipment fitted on the vehicle.
- Ensure that the ignition is switched off.
- After approval from the **Techline,** replace the computer.
- Switch on the ignition and carry out a check using the diagnostic tool.
- **It is essential* to calibrate and activate computer VP011** according to the optional equipment fitted on the vehicle (see **Configurations and programming**).
- Switch off the ignition and then back on for the configurations to register.
- Go to the Read configuration menu and confirm that the configurations have been stored.
- Check for faults and carry out the fault finding procedure which corresponds to possible faults shown on the diagnostic tool.
- Clear any stored faults.
- Write the VIN by running command **VP002 Write VIN**.
- Enter the After-Sales operation date by running command **VP001 Write last After-Sales operation date**.
- Check that the **H**ands **F**ree **K**it is operating correctly.

*** WARNING**
Do not run commands **CF009 Language** and **VP011 Computer calibration and commissioning** if the part number for the computer from the Parts Department is 82 00 214 822 or 82 00 433 328: **RISK OF DAMAGING THE SYSTEM** (see identification screen).
For all other part numbers from the Parts Department, the two commands above must be run for the system to operate correctly.

GETtheMANUALS.org

SUMMARY TABLE

CONFIGURATION		OPTIONS	CONFIGURATION READING	
VP011	COMPUTER CALIBRATION AND COMMISSIONING	VEHICLE TYPE TYPE OF RADIO SCREEN TYPE EQUIPMENT LEVEL LANGUAGE (directly accessible)	**LC001**	RADIO GENERATION
			LC002	TYPE OF RADIO
			LC003	DISPLAY GENERATION
			LC004	TYPE OF DISPLAY
			LC005	HANDS-FREE KIT GENERATION
			LC006	TYPE OF HANDS-FREE KIT
			LC007	VEHICLE TYPE
CF009	LANGUAGE * (also accessible with command VP011)	FRENCH ENGLISH GERMAN ITALIAN PORTUGUESE DUTCH SPANISH	**LC009**	LANGUAGE

Note:
– Following configuration, switch the ignition off and then back on for the configurations to register.
– As this fault finding is the same as the Laguna II Phase II and Espace IV, ignore the configurations not indicated above.
– Acoustic configuration is automatic on computer calibration and commissioning.

*** WARNING**
Do not run commands **CF009 Language** and **VP011 Computer calibration and commissioning** if the part number for the computer from the Parts Department is 82 00 214 822 or 82 00 433 328: **RISK OF DAMAGING THE SYSTEM** (see identification screen).
For all other part numbers from the Parts Department, the two commands above must be run for the system to operate correctly.

– Command **VP011 Computer calibration and commissioning** enables the type of radio, vehicle type, screen type, language options, equipment level and acoustic specifications to be defined for the vehicle.

– The **CF009 Language** configuration **is used to activate voice recognition** in the language selected.

– The acoustic specifications enable adjustment of the echo/noise reduction and voice recognition functions depending on the vehicle's interior volume.

GETtheMANUALS.org

Tool fault	Associated DTC	Diagnostic tool title
DF001	**93 00**	Computer
DF002	**93 01**	Computer/display connection
DF003	**93 02**	Computer supply
DF004	**93 03**	Computer/microphone connection
DF005	**93 04**	Telephone cradle power supply
DF006	**93 11**	Computer/telephone cradle connection
DF007	**93 12**	Telephone signal
DF008	**93 2A**	Inconsistent acoustic configuration
DF011	**93 A2**	No radio multiplex signal
DF012	**93 A3**	No display multiplex signal
DF013	**93 23**	Incorrect configuration of audio equipment
DF014	**93 24**	Incorrect display configuration
DF015	**93 21**	Computer configuration
DF016	**93 16**	Computer

GETtheMANUALS.org

DF001 PRESENT OR STORED	COMPUTER 1.DEF: internal electronic fault

NOTES	**Priority in the event of a number of faults:** Firstly, deal with fault **DF003 Computer supply voltage**, if it is present or stored.

If the fault is stored:
Clear the fault, switch off the ignition and disconnect the computer supply fuse (see wiring diagram).
Reconnect the fuse and switch on the ignition again (forced + after ignition feed).

If the fault reappears as **stored** when the ignition is switched on:
Check the **connection, condition and conformity** of the Hands-Free Kit computer connectors and their clips.
Repair if necessary.

Disconnect the Hands-Free Kit computer 40-track connector and check the conformity of the electrical supplies (they must be the same as the battery voltage).
In the event of a fault, check the **insulation, continuity and the absence of interference resistance** on the following connections:

Hands-Free Kit computer 40-track connector

Track 9	→	**Earth**
Track 4	→	**+ 12 V before ignition feed**
Track 6	→	**+ 12 V accessories feed**
Track 7	→	**+ 12 V after ignition feed**

Repair if necessary.

If the fault is present or if it cannot be dealt with, fill in the **fault finding log** and contact the **Techline**.

AFTER REPAIR	If the computer was replaced (**at the request of the Techline**): reconfigure the computer (see **Configurations and programming**). Deal with any other faults.

GETtheMANUALS.org

DF002 PRESENT OR STORED	COMPUTER/DISPLAY CONNECTION CO.1 : open circuit or short circuit to + 12 V CC.0 : short circuit to earth

NOTES	**Priorities when dealing with a number of faults:** First deal with fault **DF014 Incorrect display configuration**.

Check the **connection, condition and conformity** of the Hands-Free Kit computer 40-track connector and its clips.
Repair if necessary.

Check the **connection, condition and conformity** of the instrument panel 24-track connector and its clips.
Repair if necessary.

Disconnect the Hands-Free Kit computer 40-track connector and the A3 display 24-track connector to check the **insulation, continuity and the absence of interference resistance** of the connection:

Hands-Free Kit computer Black 40-track connector		**A3 display Black 24-track connector**
Track 2	→	**Track 16**

Repair if necessary.

AFTER REPAIR	Clear the stored faults. Deal with any other faults. Check that the system is operating correctly.

GETtheMANUALS.org

DF003 PRESENT OR STORED	COMPUTER SUPPLY VOLTAGE 1.DEF: undervoltage 2.DEF: excess voltage

NOTES	**Special notes:** The undervoltage fault appears if the computer supply voltage is equal to or less than **8.5 V**. The excess voltage fault appears if the computer supply voltage is equal to or greater than **16 V**.

Check the conformity of the battery voltage (**10 V < X < 14.4 V**).
If the voltage is not correct, run fault finding on the battery and the charge circuit.

Check that the fuses are in good condition: F23 of 10A (+ 12 V accessories feed), F28 of 20A (+ 12 V after ignition feed) and F50 of 20A (+ 12 V before ignition feed): see wiring diagram.

Check the **connection, condition and conformity** of the Hands-Free Kit computer connectors and their clips. Repair if necessary.

Disconnect the Hands-Free Kit computer 40-track connector and check the conformity of the electrical supplies (they must be the same as the battery voltage).
In the event of a fault, check the **insulation, continuity and the absence of interference resistance** on the following connections:

Hands-Free Kit computer 40-track connector

Track 9	→	**Earth**
Track 4	→	**+ 12 V before ignition feed** (see vehicle diagram)
Track 6	→	**+ 12 V accessories feed** (see vehicle diagram)
Track 7	→	**+ 12 V after ignition feed** (see vehicle diagram)

Repair if necessary.

AFTER REPAIR	Clear the stored faults. Deal with any other faults. Check that the system is operating correctly.

GETtheMANUALS.org

DF004 PRESENT OR STORED	COMPUTER/MICROPHONE CONNECTION CO : open circuit CC.0 : short circuit to earth CC.1 : short circuit to + 12 V

NOTES	**Special notes:** The microphone is located in the middle of the sun visor.

Run the **VP004 Test microphone** command (repair mode of the diagnostic tool, parameter setting tab): see the interpretation of this command.

If the result from the test is 0 %, check **the connection, condition and conformity** of the Hands-Free Kit computer 40-track connector and its clips and **the connection, condition and conformity** of the microphone's grey 6-track connector and its clips.
Repair if necessary.

Switch off the ignition and disconnect the aforementioned connectors to check the insulation, continuity and absence of interference resistance on the following connections:

Hands-Free Kit computer 40-track connector		**Microphone 6-track connector**
Track 28 (+ Microphone)	→	**Track 2**
Track 29 (- Microphone)	→	**Track 1**

Repair if necessary (refer to vehicle wiring diagrams).

AFTER REPAIR	Clear the stored faults. Deal with any other faults. Check that the system is operating correctly.

GETtheMANUALS.org

DF005 PRESENT OR STORED	TELEPHONE CRADLE POWER SUPPLY CO.1 : open circuit or short circuit to + 12 V CC.0 : short circuit to earth

NOTES	**Priorities when dealing with a number of faults:** Firstly, deal with fault **DF003 Computer supply voltage**, if it is present or stored. **Special notes:** The telephone cradle is located in the centre console.

Check the conformity of the battery voltage (**10 V < X < 14.4 V**).
If the voltage is not correct, run fault finding on the battery and the charge circuit.

Check that the fuses are in good condition: F23 of 10A (+ 12 V accessories feed), F28 of 20A (+ 12 V after ignition feed) and F50 of 20A (+ 12 V before ignition feed): see wiring diagram.

Check the **connection, condition and conformity** of the telephone base plate connector (behind the gear lever) as well as the condition of the electrical contacts between the base plate in the vehicle and the telephone cradle. Repair if necessary.

Check the insulation, continuity and the absence of interference resistance on the following connections:

Hands-Free Kit computer Black 24-track connector		**Telephone cradle 14-track connector**
Track 13	→	**Track 4 (+ 12 V)**
Track 14	→	**Track 6 (earth)**

Repair if necessary.

If the connections checked before and the power supplies are fine but the fault is still present: replace the telephone base plate.

AFTER REPAIR	Clear the stored faults. Deal with any other faults. Check that the system is operating correctly.

GETtheMANUALS.org

DF006 PRESENT OR STORED	COMPUTER/TELEPHONE CRADLE CONNECTION 1.DEF: absence of or poor response from telephone cradle to the computer

NOTES	**Priorities when dealing with a number of faults:** Firstly, deal with fault **DF005 Telephone cradle supply voltage**, if present or stored.
	Special notes: The connections between the computer and the telephone base plate comprise wire connections. The telephone base plate is located in the centre console.

Activate the **VP005 Series connections test** command (repair mode of the diagnostic tool, setting tab).

If the command result displays Incorrect:
Check the **connection, condition and conformity** of the telephone base plate connector (behind the gear lever) as well as the condition of the electrical contacts between the base plate in the vehicle and the telephone cradle.
Repair if necessary.

Check the **connection, condition and conformity** of the Hands-Free Kit computer 24-track connector and its clips.
Repair if necessary.

Disconnect the computer 24-track connector and that of the telephone base plate and check **the insulation, continuity and absence of interference resistance** on the following serial connections:

Hands-Free Kit computer 24-track connector		**Telephone base plate 14-track connector**
Track 17	→	**Track 8**
Track 18	→	**Track 9**
Track 21	→	**Track 13**
Track 22	→	**Track 14**

Repair if necessary.

AFTER REPAIR	Clear the stored faults. Deal with any other faults. Check that the system is operating correctly.

GETtheMANUALS.org

DF007 PRESENT OR STORED	TELEPHONE SIGNAL 1.DEF: signal incoherence

NOTES	**Processing priority in the event of a number of faults:** Firstly, deal with fault **DF006 Computer/telephone connection**, if it is present or stored.
	Special notes: The telephone base plate is located in the centre console. This fault indicates either an absence of communication or poor communication between the telephone (or the telephone cradle and not the base plate) and the computer.

Check **the connection and the status** of the telephone cradle base plate connector. Repair if necessary.
Check the condition of the telephone base plate and the telephone cradle contacts (gold-plated contacts). Replace the vehicle base plate or the telephone cradle if necessary.
Put the telephone in its cradle and check on the navigation screen that the telephone is detected ("Tel" non barred symbol). If the fault is still present, check that the customer telephone still works.

AFTER REPAIR	Clear the stored faults. Deal with any other faults. Check that the system is operating correctly.

GETtheMANUALS.org

DF008 PRESENT OR STORED	INCONSISTENT ACOUSTIC CONFIGURATION 1.DEF: incorrect acoustic parameters

NOTES	**Special note:** This fault indicates that the acoustic parameters in the computer's memory are not correct for the vehicle to which the system is fitted.

Set the acoustic parameters in the computer by running command **VP011 Computer calibration and commissioning** (see **Configurations and programming**).

AFTER REPAIR	Clear the stored faults. Deal with any other faults. Check that the system is operating correctly.

GETtheMANUALS.org

DF010 PRESENT OR STORED	HANDS FREE KIT MULTIPLEX NETWORK 1.DEF: No computer multiplex signal

NOTES	**Processing priority in the event of a number of faults:** Deal with fault **DF013 Incorrect audio equipment configuration** first, if present or stored.

PN6 top of the range radio

Disconnect the 40-track connector from the Hands-Free Phone unit, and the 15-track radio connector (PN6) to check the insulation, **continuity and the absence of interference resistance** on the following connections:

Hands-Free Phone computer 40-track connector		**PN6 Radio Black 15-track connector**
Track 14	→	**Track 3**
Track 11	→	**Track 4**
PN6 Radio Black 15-track connector		**Diagnostic socket**
Track 1	→	**Track 13**
Track 2	→	**Track 12**

Repair if necessary.

NR5 mid-range radio

Disconnect the 40-track connector from the Hands-Free Phone unit, and the yellow 6-track radio connector (NR5) to check the insulation, **continuity and the absence of interference resistance** on the following connections:

Hands-Free Phone computer 40-track connector		**NR5 radio Yellow 6-track connector**
Track 14	→	**Track 2**
Track 11	→	**Track 1**
NR5 radio Black 15-track connector		**Diagnostic socket**
Track 1	→	**Track 12**
Track 2	→	**Track 13**

Repair if necessary.

AFTER REPAIR	Clear the stored faults. Deal with any other faults. Check that the system is operating correctly.

GETtheMANUALS.org

DF011 PRESENT OR STORED	NO RADIO MULTIPLEX SIGNAL

NOTES	**Processing priority in the event of a number of faults:** Deal with fault **DF013 Incorrect audio equipment configuration** first, if present or stored.

PN6 top of the range radio

Disconnect the 40-track connector from the Hands-Free Phone unit, and the 15-track radio connector (PN6) to check the insulation, **continuity and the absence of interference resistance** on the following connections:

Hands-Free Phone computer 40-track connector		**PN6 Radio Black 15-track connector**
Track 14	→	**Track 3**
Track 11	→	**Track 4**

PN6 Radio Black 15-track connector		**Diagnostic socket**
Track 1	→	**Track 13**
Track 2	→	**Track 12**

Repair if necessary.

NR5 mid-range radio

Disconnect the 40-track connector from the Hands-Free Phone unit, and the yellow 6-track radio connector (NR5) to check the insulation, **continuity and the absence of interference resistance** on the following connections:

Hands-Free Phone computer 40-track connector		**NR5 radio Yellow 6-track connector**
Track 14	→	**Track 2**
Track 11	→	**Track 1**

NR5 radio Black 15-track connector		**Diagnostic socket**
Track 1	→	**Track 12**
Track 2	→	**Track 13**

Repair if necessary.

AFTER REPAIR	Clear the stored faults. Deal with any other faults. Check that the system is operating correctly.

GETtheMANUALS.org

DF012 PRESENT OR STORED	NO DISPLAY MULTIPLEX SIGNAL

NOTES	**Processing priority in the event of a number of faults:** Deal with fault **DF014 Incorrect display configuration** first, if present or stored.

Check that the computer is configured correctly; reconfigure if necessary (see **Configurations and programming**).
In the event of a fault, run **fault finding on the multiplex network**.

Check the connection and the condition of the Hands-Free Kit computer 40-track connectors and the display's 24-track connector.

PN6 top of the range radio

Disconnect the radio (PN6) black 15-track connector, the Hands-Free Kit computer black 40-track connector and the A3 display black 24-track connector, to check the insulation, continuity and absence of interference resistance on the following connections:

A3 display 24-track connector		PN6 Radio 15-track connector		Hands-Free Kit computer 40-track connector
Track 11	→	Track 2	Track 4	→ Track 11
Track 12	→	Track 1	Track 3	→ Track 14

PN6 Radio Black 15-track connector		Diagnostic socket
Track 1	→	Track 13
Track 2	→	Track 12

Repair if necessary.

AFTER REPAIR	Clear the stored faults. Deal with any other faults. Check that the system is operating correctly.

GETtheMANUALS.org

DF012 **CONTINUED**	

NR5 mid-range radio	Disconnect the radio (NR5) yellow 6-track connector and the Hands-Free Kit computer black 40-track connector to check the insulation, continuity and the absence of interference resistance on the following connections: **A3 display 24-track connector** → **NR5 radio 6-track connector** **Track 11** → **Track 1** **Track 12** → **Track 2** **NR5 radio Black 15-track connector** → **Diagnostic socket** **Track 1** → **Track 12** **Track 2** → **Track 13** Repair if necessary.

AFTER REPAIR	Clear the stored faults. Deal with any other faults. Check that the system is operating correctly.

GETtheMANUALS.org

DF013 PRESENT	INCORRECT CONFIGURATION OF AUDIO EQUIPMENT

NOTES	**None.**

Configure the Hands-Free Kit computer by running command **VP011 Computer calibration and commissioning** (see **Configurations and programming**).
Following configuration, switch the ignition off and then back on for the configurations to register.

AFTER REPAIR	Clear the stored faults. Deal with any other faults. Check that the system is operating correctly.

GETtheMANUALS.org

DF014 PRESENT	INCORRECT DISPLAY CONFIGURATION

NOTES	**None.**

Configure the Hands-Free Kit computer by running command **VP011 Computer calibration and commissioning** (see **Configurations and programming**).
Following configuration, switch the ignition off and then back on for the configurations to register.

AFTER REPAIR	Clear the stored faults. Deal with any other faults. Check that the system is operating correctly.

GETtheMANUALS.org

DF015 PRESENT	COMPUTER CONFIGURATION 1.DEF: blank or incomplete configuration

NOTES	**None.**

Configure the Hands-Free Kit computer by running command **VP011 Computer calibration and commissioning** (see **Configurations and programming**).
Following configuration, switch the ignition off and then back on for the configurations to register.

AFTER REPAIR	Clear the stored faults. Deal with any other faults. Check that the system is operating correctly.

GETtheMANUALS.org

DF016 PRESENT OR STORED	COMPUTER 1.DEF: inconsistencies in computer software

NOTES	**Priority in the event of a number of faults:** Firstly, deal with fault **DF003 Computer supply voltage**, if it is present or stored.

If the fault is stored, clear the fault, switch off the ignition and disconnect the computer's supply fuse (see wiring diagram).
Reconnect the fuse and switch on the ignition again (forced + after ignition feed).

If the fault reappears as **stored** when ignition is switched on, check the **connection, condition and conformity** of the Hands-Free Kit computer connectors and their clips.
Repair if necessary.

Disconnect the Hands-Free Kit computer 40-track connector and check the conformity of the electrical supplies (they must be the same as the battery voltage).
In the event of a fault, check the **insulation, continuity and the absence of interference resistance** on the following connections:

Hands-Free Kit computer 40-track connector

Track 9	→	**Earth**
Track 4	→	**+ 12 V before ignition feed**
Track 6	→	**+ 12 V accessories feed**
Track 7	→	**+ 12 V after ignition feed**

Repair if necessary.

If the fault is present or if it cannot be dealt with, fill in the **fault finding log** and contact the **Techline**.

AFTER REPAIR	If the computer was replaced (**at the request of the Techline**): reconfigure the computer (see **Configurations and programming**). Deal with any other faults.

GETtheMANUALS.org

NOTES	Carry out this conformity check after a full check using the diagnostic tool (fault reading and configuration checks). **Conditions of use:** ignition on.

MAIN COMPUTER STATUSES AND PARAMETERS

Order	Function	Parameter or Status checked or Action		Display and notes	Fault finding
1	Main computer statuses and parameters	**ET002:**	RADIO ON SIGNAL	**PRESENT** when the radio is switched on. **ABSENT** if not.	In the event of a fault, **consult the interpretation for this status**.
		ET003:	+ 12 V after ignition feed	**PRESENT** **ABSENT**	In the event of a fault, **consult the interpretation for this status**.
		ET004:	+ 12 V accessories feed	**PRESENT** **ABSENT**	In the event of a fault, **consult the interpretation for this status**.
		PR003:	Battery voltage	**10 V < X < 14.4 V**	In the event of a fault, **consult the interpretation for this parameter**.
		PR004:	Vehicle speed	**X mph (km/h)**	In the event of a fault, **consult the interpretation for this parameter**.

GETtheMANUALS.org

NOTES	Carry out this conformity check after a full check using the diagnostic tool (fault reading and configuration checks). **Conditions of use:** ignition on.

DRIVER SELECTION SUB-FUNCTION

Order	Function	Parameter or Status checked or Action	Display and notes	Fault finding
1	Radio satellite control buttons	**ET006:** + button	**PRESSED** if the + button is pressed on the satellite control. **RELEASED** otherwise.	In the event of a fault, refer to **the interpretation of this status**.
		ET007: - button	**PRESSED** if the - button is pressed on the satellite control. **RELEASED** otherwise.	In the event of a fault, refer to **the interpretation of this status**.
		ET008: Upper button	**PRESSED** if the top satellite control button is pressed. **RELEASED** otherwise.	In the event of a fault, refer to **the interpretation of this status**.
		ET009: Upper button	**PRESSED** if the upper satellite control button is pressed. **RELEASED** otherwise.	In the event of a fault, refer to **the interpretation of this status**.
		ET010: Lower button	**PRESSED** if the bottom satellite control button is pressed. **RELEASED** otherwise.	In the event of a fault, refer to **the interpretation of this status**.
		ET011: Wheel action	**INACTIVE** if the wheel is inactive, **UPWARDS** or **DOWNWARDS** depending on the action on the wheel.	In the event of a fault, refer to **the interpretation of this status**.
		ET013: Communication connection button	**PRESSED** if the communication connection button is pressed. **RELEASED** otherwise.	In the event of a fault, refer to **the interpretation of this status**.

GETtheMANUALS.org

NOTES	Carry out this conformity check after a full check using the diagnostic tool (fault reading and configuration checks). **Conditions of use:** ignition on and telephone in its cradle.

TELEPHONE SUB-FUNCTION

Order	Function	Parameter or Status checked or Action		Display and notes	Fault finding
2	Telephone	**ET002:**	"Radio on" signal	**PRESENT** when the radio is switched on. **ABSENT** otherwise.	In the event of a fault, refer to **the interpretation of this status**.
		ET014:	Telephone	**PRESENT** when the telephone is present. **ABSENT** otherwise.	In the event of a fault, refer to **the interpretation of this status**.
		ET021:	Telephone operation	**OFF** when the telephone is switched off. **ON** otherwise.	In the event of a fault, refer to **the interpretation of this status**.
		ET015:	PIN Code	**VALID** if the code is correct. **WRONG** if not.	In the event of a fault, refer to **the interpretation of this status**.
		ET016:	Telephone network	**PRESENT** if the telephone network is present (telephone in its cradle). **ABSENT** otherwise.	In the event of a fault, refer to **the interpretation of this status**.
		PR001:	Telephone signal	**0 % < X < 100 %** (to find out the signal level, the telephone must be in its cradle).	If there is a fault, refer to the **interpretation of this parameter**

GETtheMANUALS.org

NOTES	Carry out this conformity check after a full check using the diagnostic tool (fault reading and configuration checks). **Conditions of use:** ignition on.

RING TONE TESTS SUB-FUNCTION

Order	Function	Parameter or Status checked or Action	Display and notes	Fault finding
3	Ring tones	**AC001:** Telephone ring tone	The telephone's ring tone must be audible.	In the event of a fault, refer to the **interpretation of this command**.
		AC003: Low-pitched tone	A low-pitched tone should be heard.	In the event of a fault, refer to the **interpretation of this command**.
		AC002: High-pitched tone	A high-pitched tone should be heard.	In the event of a fault, refer to the **interpretation of this command**.

GETtheMANUALS.org

Tool status	Diagnostic tool title
ET002	"Radio on" signal
ET003	+ 12 V after ignition feed
ET004	+ 12 V accessories feed
ET006	+ button
ET007	- button
ET008	Top button
ET009	Upper button
ET010	Lower button
ET011	Wheel action
ET013	Communication connection button
ET014	Telephone
ET015	PIN Code
ET016	Telephone network
ET021	Telephone operation

GETtheMANUALS.org

ET002	RADIO ON SIGNAL

NOTES	**Special notes:** **ET002 RADIO ON SIGNAL** has two specifications: – present, – absent.

PN6 auditorium radio

This signal activates the Hands-Free Kit (except with + Accessories feed) and therefore starts up the audio system. It passes between the Hands-Free Kit computer and the radio.

If the signal is **Absent** when the radio is switched on, disconnect the Hands-Free Kit computer 40-track connector and the top of the range radio black 15-track PN6 connector to check the **insulation, continuity and absence of interference resistance** of the connection:

Hands-Free Kit computer 40-track connector		**Top of the range radio Black 15-track connector**
Track 18	→	**Track 8**

Repair if necessary.

NR5 mid-range radio

This signal activates the Hands-Free Kit (outside + accessories feed) thereby turning on the audio system; the signal passes between the Hands-Free Kit computer and the radio.

If the signal is **Absent** when the radio is switched on, disconnect the 40-track Hands-Free Kit computer connector and the middle of the range black/yellow 6-track NR5 radio connector to check the **insulation, continuity and absence of interference resistance** on the following connections:

Hands-Free Kit computer 40-track connector		**Mid-range radio Yellow 6-track connector**
Track 18	→	**Track 5**

Repair if necessary.

AFTER REPAIR	Repeat the conformity check from the start.

GETtheMANUALS.org

ET003	+ 12 V AFTER IGNITION

NOTES	**Special notes:** The **ET003 + 12 V after ignition feed** has two specifications: – present, – absent. If the status is absent when ignition is switched on, apply the interpretation for this status.

The **+ 12 V** after ignition feed to the Hands-Free Kit computer is supplied via track 7 of the 40-track connector.
With the ignition switched on, check the presence and conformity of the **+ 12 V** after ignition feed on track 7 of the Hands-Free Kit computer.
If the feed is not correct:
– check the 20A F28 fuse located in the passenger compartment fuse and relay box (replace it if necessary),
– use the universal bornier to check the **insulation, continuity and the absence of interference resistance** on the following connection:

Passenger compartment fuse and relay box
White 18-track green clip connector, Track 3
→
40-track Hands-Free Kit computer connector, track 7

Repair if necessary.

Reconnect the passenger compartment fuse and relay box and connectors and the Hands-Free Kit computer connectors.

If the fault is still present, carry out fault finding on the charge circuit.

AFTER REPAIR	Repeat the conformity check from the start.

GETtheMANUALS.org

ET004	+ 12 V ACCESSORIES

NOTES	**Special notes:** **ET004 + 12 V accessories feed** has two specifications: – present, – absent. If the status is absent when ignition is switched on, apply the interpretation for this status.

The **+ 12 V** accessories feed to the Hands-Free Kit computer is supplied via track 6 of the 40-track connector.
With the ignition switched on, check the presence and conformity of the **+ 12 V** accessories feed on track 6 of the Hands-Free Kit computer.
If the feed is not correct:
– check the 10 A F23 fuse located in the passenger compartment fuse and relay box (replace it if necessary).
– use the universal bornier to check the **insulation, continuity and the absence of interference resistance** on the following connection:

Passenger compartment fuse and relay box **Black 27-track connector, track 7**	→	**Hands-Free Kit computer** Track 6, 40-track connector

Repair if necessary.

Reconnect the passenger compartment fuse and relay box and connectors and the Hands-Free Kit computer connectors.

If the fault is still present, carry out fault finding on the charge circuit.

AFTER REPAIR	Repeat the conformity check from the start.

GETtheMANUALS.org

ET006	+ BUTTON

NOTES	**Special notes:** **ET006 + button** has two specifications: – pressed, – released. If the specification of the status is not the same as the action on the button, apply this fault finding procedure. For the allocation of the satellite tracks (see the Allocation of computer tracks section).

Disconnect the connector from the satellite control and run the following check using an ohmmeter:
- **+** button pressed: continuity (**R < 150 Ω**) between track **A1** and track **B1**,
- **+** button released: no continuity between track **A1** and track **B1**,

If the button does not operate as indicated, replace the radio satellite control.

If the satellite control is operating correctly, disconnect the Hands-Free Kit computer 40-track connector to check **the insulation, continuity and absence of interference resistance** on the following connections:

Hands-Free Kit computer 40-track connector		**Radio satellite control**
Track 20	→	**Track B1**
Track 25	→	**Track A1**

Repair if necessary.

AFTER REPAIR	Repeat the conformity check from the start.

GETtheMANUALS.org

ET007	- BUTTON

NOTES	**Special notes:** **ET007 - button** has two specifications: – pressed, – released. If the specification of the status is not the same as the action on the button, apply this fault finding procedure. For the allocation of the satellite tracks (see the Allocation of computer tracks section).

Disconnect the connector from the satellite control and run the following check using an ohmmeter:
– **-** button pressed: continuity (**R < 150 Ω**) between track **B3** and track **B1**,
– **-** button released: no continuity between track **B3** and track **B1**,
If the button does not operate as indicated, replace the radio satellite control.

If the satellite control is operating correctly, disconnect the Hands-Free Kit computer 40-track connector to check **the insulation, continuity and absence of interference resistance** on the following connections:

Hands-Free Kit computer 40-track connector		**Radio satellite control**
Track 20	→	**Track B1**
Track 23	→	**Track B3**

Repair if necessary.

AFTER REPAIR	Repeat the conformity check from the start.

GETtheMANUALS.org

ET008	TOP BUTTON

NOTES	**Special notes:** **ET008 Upper button** has two specifications: – pressed, – released. If the specification of the status is not the same as the action on the button, apply this fault finding procedure.
	Note: The upper button has the words Audio Source on it (button near to the steering wheel). For the allocation of the satellite tracks (see the Allocation of computer tracks section).

Disconnect the connector from the satellite control and run the following check using an ohmmeter:
- Upper button pressed: continuity (**R < 150 Ω**) between track **B3** and track **B2**,
- Upper button released: no continuity between track **B3** and track **B2**.

If the button does not operate as indicated, replace the radio satellite control.

If the satellite control is operating correctly, disconnect the Hands-Free Kit computer 40-track connector to check **the insulation, continuity and absence of interference resistance** on the following connections:

Hands-Free Kit computer 40-track connector		**Radio satellite control**
Track 23	→	**Track B3**
Track 22	→	**Track B2**

Repair if necessary.

AFTER REPAIR	Repeat the conformity check from the start.

GETtheMANUALS.org

ET009	TOP BUTTON

NOTES	**Special notes:** The **ET009 Top button** has two specifications: – pressed, – released. If the specification of the status is not the same as the action on the button, apply this fault finding procedure. For the allocation of the satellite tracks (see the Allocation of computer tracks section). Note: The top button is the button with a telephone symbol.

Disconnect the connector from the satellite control and run the following check using an ohmmeter:
- Top button pressed: continuity (**R < 150 Ω**) between track **A3** and track **B2**,
- Top button released: no continuity between track **A3** and track **B2**.

If the button does not operate as indicated, replace the radio satellite control.

If the satellite control is operating correctly, disconnect the Hands-Free Kit computer 40-track connector to check **the insulation, continuity and absence of interference resistance** on the following connections:

Hands-Free Kit computer 40-track connector		**Radio satellite control**
Track 21	→	**Track A3**
Track 22	→	**Track B2**

Repair if necessary.

AFTER REPAIR	Repeat the conformity check from the start.

GETtheMANUALS.org

ET010	LOWER BUTTON

NOTES	**Special notes:** **ET010 Lower button** has two specifications: – pressed, – released. If the specification of the status is not the same as the action on the button, apply this fault finding procedure. For the allocation of the satellite tracks (see the Allocation of computer tracks section).
	Note: The lower button is the lower button on the satellite control.

Disconnect the connector from the satellite control and run the following check using an ohmmeter:
- Lower button pressed: continuity (**R < 150 Ω**) between track **A3** and track **B1**,
- Lower button released: no continuity between track **A3** and track **B1**.

If the button does not operate as indicated, replace the radio satellite control.

If the continuity on the satellite control is correct when a button is pressed, disconnect the Hands-Free Kit computer 40-track connector to check the insulation, continuity and absence of interference resistance on the following connections:

Hands-Free Kit computer 40-track connector		**Radio satellite control**
Track 21	→	**Track A3**
Track 20	→	**Track B1**

Repair if necessary.

AFTER REPAIR	Repeat the conformity check from the start.

GETtheMANUALS.org

ET011	TUMBLEWHEEL ACTION

NOTES	**Special notes:** **ET011 Tumblewheel action** has three specifications: – inactive, – upwards, – downwards, If the status specification is inactive when the tumblewheel is activated, apply the interpretation of this status. For the allocation of the satellite tracks (see the Allocation of computer tracks section).

Check the operation of the satellite control by referring to Steering wheel control in Section 86A of the Electrical equipment MR.

- Tumblewheel 1st position: continuity (**R = 1.5 Ω ± 0.5**) between track **A3** and track **A2**,
- Tumblewheel 2nd position: continuity between track **B3** and track **A2**,
- Tumblewheel 3rd position: continuity between track **A1** and track **A2**,

If the button does not operate as indicated, replace the radio satellite control.

If the satellite control is operating correctly, disconnect the Hands-Free Kit computer 40-track connector to check **the insulation, continuity and absence of interference resistance** on the following connections:

Hands-Free Kit computer 40-track connector		**Radio satellite control**
Track 24	→	**Track A2**
Track 21	→	**Track A3**
Track 23	→	**Track B3**
Track 25	→	**Track A1**

Repair if necessary.

AFTER REPAIR	Repeat the conformity check from the start.

GETtheMANUALS.org

ET013	COMMUNICATION CONNECTION BUTTON

NOTES	**Special notes:** **ET013 Communication connection button** has two specifications: – pressed, – released. If the specification of the status is not the same as the action on the button, apply this fault finding procedure.
	Note: The communication connection button is located on the end of the lighting stalk.

Disconnect the Hands-Free Kit computer 40-track connector to check the insulation, continuity and absence of interference resistance on the following connection:

Hands-Free Kit computer 40-track connector		**Lighting stalk black 3-track connector**
Track 17	→	**Track 2**

Repair if necessary.

AFTER REPAIR	Repeat the conformity check from the start.

GETtheMANUALS.org

ET014	TELEPHONE

NOTES	**Special notes:** **ET014 Telephone** has two specifications: – present, – absent. If the specification of the status is not the same as the status of the system, apply this fault finding procedure.
	Note: This status is only active if the telephone is in its cradle.

Check the status and connection of the 14-track base plate connector. Repair if necessary.
Check the condition of the contacts between the vehicle base plate and the telephone cradle. Replace the base plate or the cradle if necessary.
If the fault is still present, check that the telephone is operating.

AFTER REPAIR	Repeat the conformity check from the start.

GETtheMANUALS.org

ET015	PIN CODE

NOTES	**Special notes:** **ET015 PIN code** has two specifications: – valid, – incorrect. If the specification of the status is not the same as the status of the system, apply this fault finding procedure.
	Note: This status is only active if the telephone is in its cradle.

Make sure that the PIN code entered in the telephone is correct.
If not, re-enter the correct PIN code.

AFTER REPAIR	Repeat the conformity check from the start.

GETtheMANUALS.org

ET016	TELEPHONE NETWORK

NOTES	**Special notes:** **ET016 Telephone network** has two specifications: – present, – absent. If the specification of the status is not the same as the status of the system, apply this fault finding procedure.
	Note: – This status is only active if the telephone is in its cradle. – Check on the telephone that the telephone network is present (bargraph on the telephone). If the telephone cannot detect the network, change position before interpreting this status.

Fit the **Elé. 1737** test adapter in the place of the telephone cradle to check the aerial connection: Adapter warning light is green: the connection is fine. Adapter warning light is red: the connection is incorrect.
If the adapter warning light is red, check the insulation, **continuity and absence of interference resistance** on the connection between the aerial and the vehicle base plate. Note: This connection is ensured by a coaxial cable that joins the aerial directly to the base plate.
If the status does not operate as indicated, check the condition of the contacts between the base plate on the vehicle and the telephone cradle
If the fault is still present, check that the telephone is operating.

AFTER REPAIR	Repeat the conformity check from the start.

GETtheMANUALS.org

ET021	TELEPHONE OPERATION

NOTES	**Special notes:** **ET021 Telephone operation** has two specifications: – on, – off. If the specification of the status is not the same as the status of the system, apply this fault finding procedure.
	Note: – This status is only active if the telephone is in its cradle. – Check the operation of the telephone before interpreting this status.

If the status does not operate as indicated, check the condition of the contacts between the base plate on the vehicle and the telephone cradle
If the fault is still present, check that the telephone is operating.

AFTER REPAIR	Repeat the conformity check from the start.

GETtheMANUALS.org

Tool parameter	Diagnostic tool title
PR001	Telephone signal
PR003	Battery voltage
PR004	Vehicle speed

GETtheMANUALS.org

PR001	TELEPHONE SIGNAL

NOTES	**Special notes:** – This parameter only operates if the telephone is in its cradle. – Check on the telephone that the telephone network is indeed present (bargraphs on the telephone). If the system is not detected by the telephone, change position before interpreting this parameter.

Fit the **Elé. 1737** test adapter in the place of the telephone cradle to check the aerial connection:
Adapter warning light is green: the connection is fine.
Adapter warning light is red: the connection is incorrect.

If the adapter warning light is red, check the insulation, **continuity and absence of interference resistance** on the connection between the aerial and the vehicle base plate.
Note:
This connection is ensured by a coaxial cable that joins the aerial directly to the base plate.

If the parameter does not operate as indicated in the conformity check, check the condition of the contacts between the vehicle base plate and the telephone cradle.

If the fault is still present, check that the telephone is operating.

AFTER REPAIR	Repeat the conformity check from the start.

GETtheMANUALS.org

PR003	BATTERY VOLTAGE

NOTES	None

Check the conformity of the battery voltage (**10 V < X < 14.4 V**).
If the voltage is not correct, run fault finding on the battery and the charge circuit.

Check that the fuses are in good condition: F23 of 10A (+ 12 V accessories feed), F28 of 20A (+ 12 V after ignition feed) and F50 of 20A (+ 12 V before ignition feed): see wiring diagram.

Check the **connection, condition and conformity** of the Hands-Free Kit computer connectors and their clips.
Repair if necessary.

Disconnect the Hands-Free Kit computer 40-track connector and check the conformity of the electrical supplies (they must be the same as the battery voltage).
In the event of a fault, check the **insulation, continuity and the absence of interference resistance** on the following connections:

- Computer connector **Track 9** → **Earth**
- Computer connector **Track 4** → **+ 12 V before ignition feed** (see vehicle diagram)
- Computer connector **Track 6** → **+ 12 V accessories feed** (see vehicle diagram)
- Computer connector **Track 7** → **+ 12 V after ignition feed** (see vehicle diagram)

Repair if necessary.

AFTER REPAIR	Repeat the conformity check from the start.

GETtheMANUALS.org

PR004	VEHICLE SPEED

NOTES	None

If this parameter is inconsistent, carry out fault finding on the ABS system.

AFTER REPAIR	Repeat the conformity check from the start.

GETtheMANUALS.org

Tool command	Diagnostic tool title
RZ001	Fault memory
AC001	Telephone ring tone
AC002	High-pitched tone
AC003	Low-pitched tone
VP001	Enter last After-Sales service date
VP002	Write VIN
VP004	Microphone test
VP005	Serial connections test
VP006	Audio connections test
VP011	Computer calibration and commissioning

GETtheMANUALS.org

AC001	TELEPHONE RING TONE

NOTES	**Special notes:** With the ignition on, this command is accessible in the tool's fault finding mode (actuator command tab).

The telephone ring tone should be heard during this command.
Running this command confirms the connections between the Hands-Free Kit computer, the radio and the speakers.

PN6 auditorium radio

If, during this command, the telephone's ring tone cannot be heard, disconnect the **40-track** Hands-Free Kit computer connector and the **transparent, 15-track** top of the range radio connector to check **the insulation, continuity and absence of interference resistance** on the following connections:

Hands-Free Kit computer 40-track connector		**Top of the range radio 15-track connector**
Track 35	→	**Track 28**
Track 36	→	**Track 30**
Track 37	→	**Track 29**

Repair if necessary.

NR5 mid-range radio

If, during this command, the telephone's ring tone cannot be heard, disconnect the **40-track** Hands-Free Kit computer connector and the **green 6-track** NR5 radio connector to check **the insulation, continuity and absence of interference resistance** on the following connections:

Hands-Free Kit computer 40-track connector		**NR5 radio Green 6-track connector**
Track 35	→	**Track 7**
Track 36	→	**Track 5**
Track 38	→	**Track 9**

Repair if necessary.

AFTER REPAIR	Repeat the conformity check from the start.

GETtheMANUALS.org

AC001 **CONTINUED**	

If the command remains mute after this step, check the continuity of the connections between the top of the range radio and the speakers by operating the radio. If it remains mute, disconnect the radio ISO B 8-track connector to check the insulation, continuity and absence of interference resistance on the following connections:

Top of the range radio 8-track connector		**Speakers**
Track 1	→	**+ rear right-hand**
Track 2	→	**- rear right-hand**
Track 3	→	**+ front right-hand**
Track 4	→	**- front right-hand**
Track 5	→	**+ front left-hand**
Track 6	→	**- front left-hand**
Track 7	→	**+ rear left-hand**
Track 8	→	**- rear left-hand**

Repair if necessary.

AFTER REPAIR	Repeat the conformity check from the start.

GETtheMANUALS.org

AC002	HIGH-PITCHED TONE

NOTES	**Special notes:** With the ignition on, this command is accessible in the tool's fault finding mode (actuator command tab).

A high-pitched tone should be heard during this command.
Running this command confirms the connections between the Hands-Free Kit computer, the radio and the speakers.

PN6 auditorium radio

If, during this command, the telephone's ring tone cannot be heard, disconnect the **40-track** Hands-Free Kit computer connector and the **transparent, 15-track** top of the range radio connector to check **the insulation, continuity and absence of interference resistance** on the following connections:

Hands-Free Kit computer 40-track connector		**Top of the range radio 15-track connector**
Track 35	→	**Track 28**
Track 36	→	**Track 30**
Track 37	→	**Track 29**

Repair if necessary.

NR5 mid-range radio

If, during this command, the telephone's ring tone cannot be heard, disconnect the **40-track** Hands-Free Kit computer connector and the **green 6-track** NR5 radio connector to check **the insulation, continuity and absence of interference resistance** on the following connections:

Hands-Free Kit computer 40-track connector		**NR5 radio Green 6-track connector**
Track 35	→	**Track 7**
Track 36	→	**Track 5**
Track 38	→	**Track 9**

Repair if necessary.

AFTER REPAIR	Repeat the conformity check from the start.

GETtheMANUALS.org

AC002 **CONTINUED**	

If the command remains mute after this step, check the continuity of the connections between the top of the range radio and the speakers by operating the radio. If it remains mute, disconnect the radio ISO B 8-track connector to check the insulation, continuity and absence of interference resistance on the following connections:

Top of the range radio 8-track connector		**Speakers**
Track 1	→	**+ rear right-hand**
Track 2	→	**- rear right-hand**
Track 3	→	**+ front right-hand**
Track 4	→	**- front right-hand**
Track 5	→	**+ front left-hand**
Track 6	→	**- front left-hand**
Track 7	→	**+ rear left-hand**
Track 8	→	**- rear left-hand**

Repair if necessary.

AFTER REPAIR	Repeat the conformity check from the start.

GETtheMANUALS.org

AC003	LOW-PITCHED TONE

NOTES	**Special notes:** With the ignition on, this command is accessible in the tool's fault finding mode (actuator command tab).

A low-pitched tone should be heard during this command.
Running this command confirms the connections between the Hands-Free Kit computer, the radio and the speakers.

PN6 auditorium radio

If, during this command, the telephone's ring tone cannot be heard, disconnect the **40-track** Hands-Free Kit computer connector and the **transparent, 15-track** top of the range radio connector to check **the insulation, continuity and absence of interference resistance** on the following connections:

Hands-Free Kit computer 40-track connector		**Top of the range radio 15-track connector**
Track 35	→	**Track 28**
Track 36	→	**Track 30**
Track 37	→	**Track 29**

Repair if necessary.

NR5 mid-range radio

If, during this command, the telephone's ring tone cannot be heard, disconnect the **40-track** Hands-Free Kit computer connector and the **green 6-track** NR5 radio connector to check the **insulation, continuity and absence of interference resistance** on the following connections:

Hands-Free Kit computer 40-track connector		**NR5 radio Green 6-track connector**
Track 35	→	**Track 7**
Track 36	→	**Track 5**
Track 38	→	**Track 9**

Repair if necessary.

AFTER REPAIR	Repeat the conformity check from the start.

GETtheMANUALS.org

AC003 **CONTINUED**	

If the command remains mute after this step, check the continuity of the connections between the top of the range radio and the speakers by operating the radio. If it remains mute, disconnect the radio ISO B 8-track connector to check the insulation, continuity and absence of interference resistance on the following connections:

Top of the range radio 8-track connector		**Speakers**
Track 1	→	**+ rear right-hand**
Track 2	→	**- rear right-hand**
Track 3	→	**+ front right-hand**
Track 4	→	**- front right-hand**
Track 5	→	**+ front left-hand**
Track 6	→	**- front left-hand**
Track 7	→	**+ rear left-hand**
Track 8	→	**- rear left-hand**

Repair if necessary.

AFTER REPAIR	Repeat the conformity check from the start.

GETtheMANUALS.org

VP004	MICROPHONE TEST

NOTES	**Special notes:** With the ignition on, this command is accessible in the tool's repair mode (parameter setting tab). To perform this test, the technician must be seated in the driver's seat and speak **normally**.

Running this command confirms the following connections:

HFK computer ⟶ Microphone ⟶ HFK computer

The electrical connections comply if the test result displays a percentage which is equal to or above 4. If the test result displays a percentage of less than 4:
Disconnect the **40-track** Hands-Free Kit computer connector as well as the **6-track** microphone connector in order to check the **insulation, continuity and absence of interference resistance** on the following connections:

Hands-Free Kit computer 40-track connector		**Microphone 6-track connector**
Track 28	⟶	**Track 2**
Track 29	⟶	**Track 1**

Repair if necessary.

AFTER REPAIR	Repeat the conformity check from the start.

GETtheMANUALS.org

VP005	SERIAL CONNECTIONS TEST

NOTES	**Special notes:** With the ignition on, this command is accessible in the tool's repair mode (parameter setting tab).

Running this command confirms the following serial connections:

HFK computer → Telephone base plate → Test adapter → Telephone base plate → HFK computer

Before running this command, fit the test adapter (Elé. 1737) in the place of the telephone cradle.
When running this command, the Hands-Free Kit sends data via the serial connections. This data is looped back to the base plate by the test adapter, and sent on to the Hands-Free Kit which analyses it.
This data cannot be displayed. The electrical connections comply if the test result displays: **CORRECT**.
If the test result displays: **INCORRECT**, disconnect the **24-track** Hands-Free Kit computer connector as well as the **14-track** telephone cradle base plate connector in order to check the **insulation, continuity and absence of interference resistance** on the following connections:

Hands-Free Kit computer 24-track connector		**Telephone base plate 14-track connector**
Track 17	→	**Track 8**
Track 18	→	**Track 9**
Track 21	→	**Track 13**
Track 22	→	**Track 14**

Repair if necessary.

AFTER REPAIR	Repeat the conformity check from the start.

GETtheMANUALS.org

VP006	AUDIO CONNECTIONS TEST

NOTES	**Special notes:** With the ignition on, this command is accessible in the tool's repair mode (parameter setting tab).

Running this command confirms the following audio connections:

HFK → telephone base plate → Test adapter → telephone base plate → HFK → Radio → Speakers

Before running this command, fit the test adapter (Elé. 1737) in the place of the telephone cradle.
This command is confirmed by a sound from the speakers: if it is absent, carry out a continuity check on the system component connections:
Disconnect the **24-track** Hands-Free Kit computer connector as well as the **14-track** telephone cradle base plate connector in order to check for **the insulation, continuity and absence of interference resistance** on the following connections:

Hands-Free Kit computer 24-track connector		**Telephone base plate 14-track connector**
Track 3	→	**Track 2**
Track 4	→	**Track 11**
Track 6	→	**Track 3**
Track 7	→	**Track 12**

Repair if necessary.

AFTER REPAIR	Repeat the conformity check from the start.

GETtheMANUALS.org

COMMUNICATION FAULT

NO DIALOGUE WITH THE COMPUTER — **ALP 1**

GETtheMANUALS.org

ALP1	No dialogue with the computer

NOTES	Before applying this procedure, check that the radio is working.

Check the conformity of the battery voltage (**10 V < X < 14.4 V**).
If the voltage is not correct, run fault finding on the battery and the charge circuit.

Check that the fuses are in good condition: F23 of 10A (+ 12 V accessories feed), F28 of 20A (+ 12 V after ignition feed) and F50 of 20A (+ 12 V before ignition feed): see wiring diagram.

Check:
– the connection between the diagnostic tool and the diagnostic sensor (lead in good condition),
– the connection between the diagnostic head and the diagnostic socket (wiring in good condition).
Repair if necessary.

Check that there is **+ 12 V before ignition feed** on **track 16**, **+ 12 V after ignition feed** on **track 1** and an earth on **tracks 4 and 5** of the vehicle's diagnostic socket.
Repair if necessary.

Test the diagnostic tool on another vehicle (to make sure the tool is not the problem).
Repair if necessary.

Check **the continuity, insulation and absence of interference resistance** on the connections to check the conformity of the Hands-Free Kit computer feeds and earths.

40-track HFK computer connector

Track 6	→	**+ 12 V accessories feed**
Track 4	→	**+ 12 V battery feed**
Track 7	→	**+ 12 V after ignition feed**
Track 9	→	**Earth**
Track 11	→	**Radio (see diagram for the radio fitted on the vehicle)**
Track 14	→	**Radio (see diagram for the radio fitted on the vehicle)**
Radio (see diagram for the radio fitted on the vehicle)	→	**Track 12 (diagnostic socket)**
	→	**Track 13 (diagnostic socket)**

Repair if necessary.

If the fault is still present, contact the Techline.

GETtheMANUALS.org

VEL SATIS

8 Electrical equipment

86C MULTIMEDIA

ITS
Program No.: 020
Vdiag No.: 04

Fault finding – Introduction	86C - 2
Fault finding – System operation	86C - 7
Fault finding – Allocation of computer tracks	86C - 9
Fault finding – Replacement of components	86C - 22
Fault finding – Configurations and programming	86C - 24
Fault finding – Fault summary table	86C - 25
Fault finding – Interpretation of faults	86C - 26
Fault finding – Conformity check	86C - 36
Fault finding – Status summary table	86C - 40
Fault finding – Interpretation of statuses	86C - 41
Fault finding – Parameter summary table	86C - 46
Fault finding – Command summary table	86C - 49
Fault finding – Dealing with commands	86C - 50
Fault finding – Customer complaints	86C - 55
Fault finding – Fault finding charts	86C - 57

V5 **Edition Anglaise**

"The repair procedures given by the manufacturer in this document are based on the technical specifications current when it was prepared.

The procedures may be modified as a result of changes introduced by the manufacturer in the production of the various component units and accessories from which his vehicles are constructed."

All rights reserved by Renault s.a.s.

Copying or translating, in part or in full, of this document or use of the service part reference numbering system is forbidden without the prior written authority of Renault s.a.s.

© Renault s.a.s. 2009

GETtheMANUALS.org

1. SCOPE OF THIS DOCUMENT

This document presents the fault finding procedure applicable to all computers with the following specifications:

Vehicle: **Espace IV phase 2** *Function concerned:* **Navigation, hands-free telephone integrated control, tuner-amplifier, CD changer**	*Name of computer:* **ITS** ***Program No.:*** *0020* ***Vdiag No.:*** *04*

2. PREREQUISITES FOR FAULT FINDING

Documentation type

Fault finding procedures (this document):
- Assisted fault finding (integrated into the diagnostic tool), Dialogys.

Wiring Diagrams:
- Visu-Schéma (CD-ROM), paper.

Type of diagnostic tools
- **CLIP**

Special tooling required

Special tooling required	
	Multimeter
Elé. 1681	Universal bornier

3. REMINDERS

Procedure

In order to save energy, the Espace IV Phase 2 UCH cuts off the + after ignition feed after 3 minutes.

To run fault finding on a computer, it is possible to force the + after ignition feed on for 1 hour by applying the following procedure:
- Press the card unlocking button,
- insert the card in the reader,
- press the Start button (interrupting the timed + after ignition feed mode),
- press and hold the start button for over 5 seconds until the engine immobiliser warning light starts to flash rapidly (4 Hz).

This forced + after ignition feed mode remains on for 1 hour.
- Pressing the Start button or removing the card from the card reader cuts off the + after ignition feed but does not cut off the forced after ignition feed timed mode. Until one hour has elapsed, activating the + after ignition feed will restart forced + after ignition feed for the remaining time.

GETtheMANUALS.org

Faults

Faults are declared present or stored (depending on whether they appeared in a certain context and have disappeared since, or whether they remain present but are not diagnosed within the current context).

The **present** or **stored** status of faults should be taken into consideration when the diagnostic tool is switched on following + after ignition feed being activated (without any system components being active).

For a **present fault**, apply the procedure described in the **Interpretation of faults** section.

For a **stored fault**, note the faults displayed and apply the **Notes** section.

If the fault is **confirmed** when the instructions in the Notes section are applied, the fault is present. Deal with the fault.

If the fault is **not confirmed**, check:
- the electrical lines which correspond to the fault,
- the connectors for these lines (for oxidation, bent pins, etc.),
- the resistance of the component detected as faulty,
- the condition of the wires (melted or split insulation, wear).

Conformity check

The aim of the conformity check is to check data that does not produce a fault on the diagnostic tool because it is inconsistent. Therefore, this stage is used to:

- carry out fault finding on faults that do not have a fault display, and which may correspond to a customer complaint.
- check that the system is operating correctly and that there is no risk of a fault recurring after repairs.

This section gives the fault finding procedures for statuses and parameters and the conditions for checking them.

If a status is not behaving normally or a parameter is outside the permitted tolerance values, consult the corresponding fault finding page.

Customer complaints - Fault finding chart

If the test with the diagnostic tool is OK but the customer complaint is still present, the fault should be processed by **Customer complaints**.

A synopsis of the general procedure to follow is provided on the following page in the form of a flow chart.

GETtheMANUALS.org

4. FAULT FINDING PROCEDURE

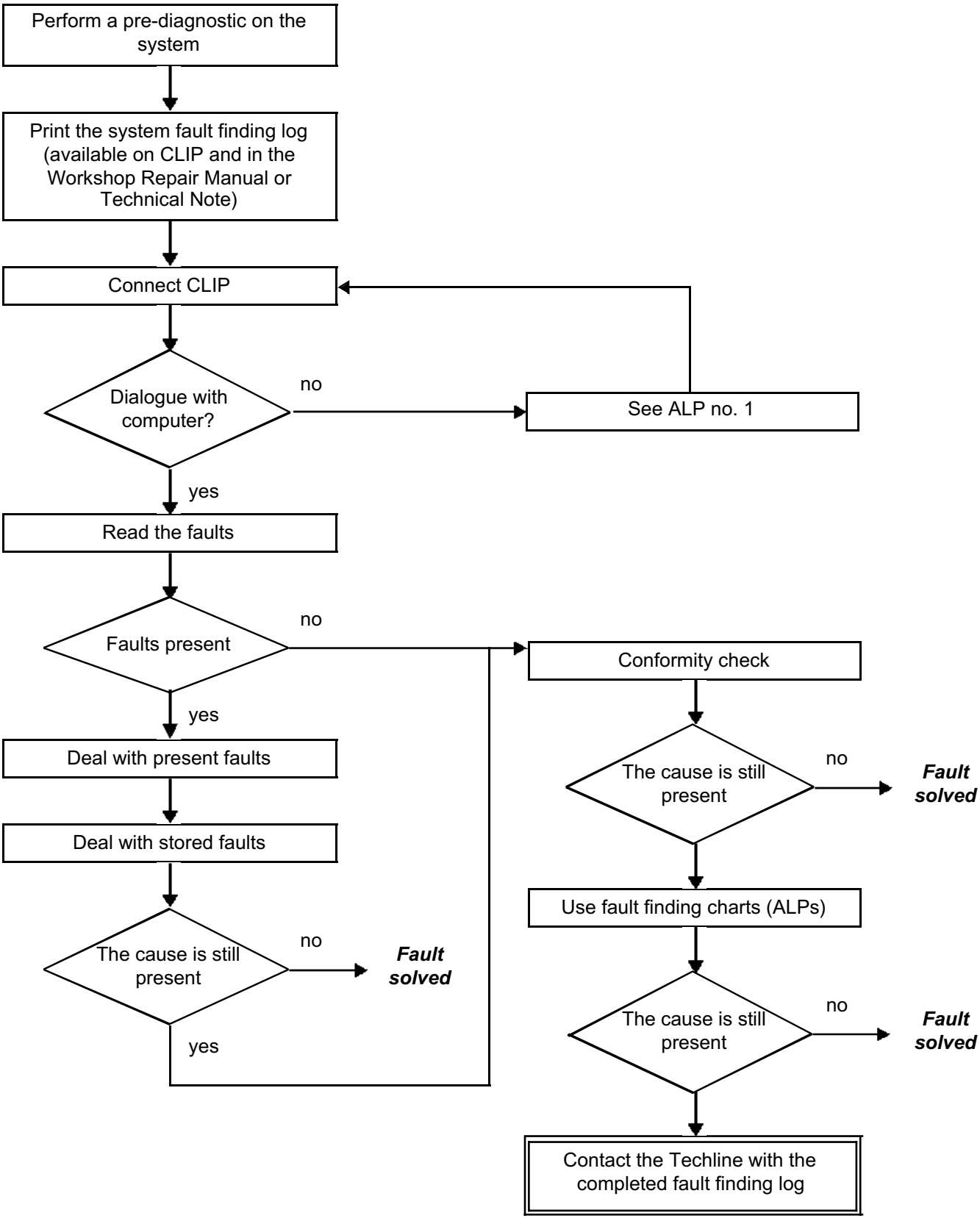

GETtheMANUALS.org

4. FAULT FINDING PROCEDURE (continued)

Wiring check

Fault finding problems
Disconnecting the connectors and/or manipulating the wiring may temporarily remove the cause of a fault.
Electrical measurements of voltage, resistance and insulation are generally correct, especially if the fault is not present when the analysis is made (stored fault).

Visual inspection
Look for damage under the bonnet and in the passenger compartment.
Carefully check the fuses, insulators and wiring harness routing.
Look for signs of oxidation.

Physical inspection
While manipulating the wiring, use the diagnostic tool to note any change in fault status from stored to present.
Make sure that the connectors are properly locked.
Apply light pressure to the connectors.
Twist the wiring harness.
If there is a change in status, try to locate the source of the fault.

Inspection of each component
Disconnect the connectors and check the appearance of the clips and tabs, as well as the crimping (no crimping on the insulating section).
Make sure that the clips and tabs are properly locked in the sockets.
Check that no clips or tabs have been dislodged during connection.
Check the clip contact pressure using an appropriate model of tab.

Continuity, insulation and resistance check
Check the continuity of entire lines, then section by section.
Look for a short circuit to earth, to **+ 12 V** or with another wire.

If a fault is detected, repair or replace the wiring harness.

GETtheMANUALS.org

5. FAULT FINDING LOG

IMPORTANT!

IMPORTANT
Any fault on a complex system requires thorough fault finding with the appropriate tools. The FAULT FINDING LOG, which should be completed during the fault finding procedure, ensures a record is kept of the procedure carried out. It is an essential document when consulting the manufacturer.

IT IS THEREFORE MANDATORY TO FILL OUT A FAULT FINDING LOG EACH TIME FAULT FINDING IS CARRIED OUT.

You will always be asked for this log:

- when requesting technical assistance from Techline,
- for approval requests when replacing parts for which approval is mandatory,
- to be attached to monitored parts for which reimbursement is requested. The log is needed for warranty reimbursement, and enables better analysis of the parts removed.

6. SAFETY INSTRUCTIONS

Safety rules must be observed during any work on a component to prevent any damage or injury:

- check the battery voltage to avoid incorrect operation of computer functions,
- use the proper tools.

GETtheMANUALS.org

The "**CARMINAT NAVIGATION** and **COMMUNICATION**" system corresponds to the "top of the range" navigation system on Espace IV ph2. This system is also called ITS (ITS: **I**ntelligent **T**ransport **S**ystem).
The navigation computer for this system combines the functions of the Central Communications Unit and the Hands-Free Telephone Integrated Control computer (Modified Hands-free Kit).

General operation

The **CARMINAT NAVIGATION** and **COMMUNICATION** system is involved in the following functions:
– Tuner-amplifier.
– CD multi-changer.
– Satellite guidance navigation.
– Hands-free telephone integrated control.
– Display.
– External thermometer.
– Clock.

1 - Tuner-amplifier

This function is used for listening to AM and FM radio. The tuner-amplifier automatically selects the best frequency for a station using the AF function. It receives road traffic information via the TMC function to optimise the CARMINAT NAVIGATION and COMMUNICATION system guidance.

2 - CD multi-changer

The CD multi-changer located on the dashboard can hold up to 6 CDs. It can play audio CDs, CD-Rs recorded by the customer and MP3 CDs. The number of CDs in the changer is visible using parameter **PR005 Number of CDs in the changer**.

3 - Navigation

This function guides the driver by displaying maps and issuing voice messages. Addresses for guidance can be entered via the central control or as voice commands.

4 - Hands-free telephone integrated control

This function enables the driver to use a mobile phone hands-free using the microphone located next to the driver's sun visor and the vehicle speakers. The CARMINAT NAVIGATION and COMMUNICATION system can be used to access the telephone directory, to receive and send calls and to receive SMS text messages. The telephone can be connected to the vehicle using Bluetooth.

5 - Display

The display is used to display information such as navigation maps, radio, CD title, time, temperature and information from the mobile phone

GETtheMANUALS.org

Layout of the main components of the CARMINAT NAVIGATION and COMMUNICATION system

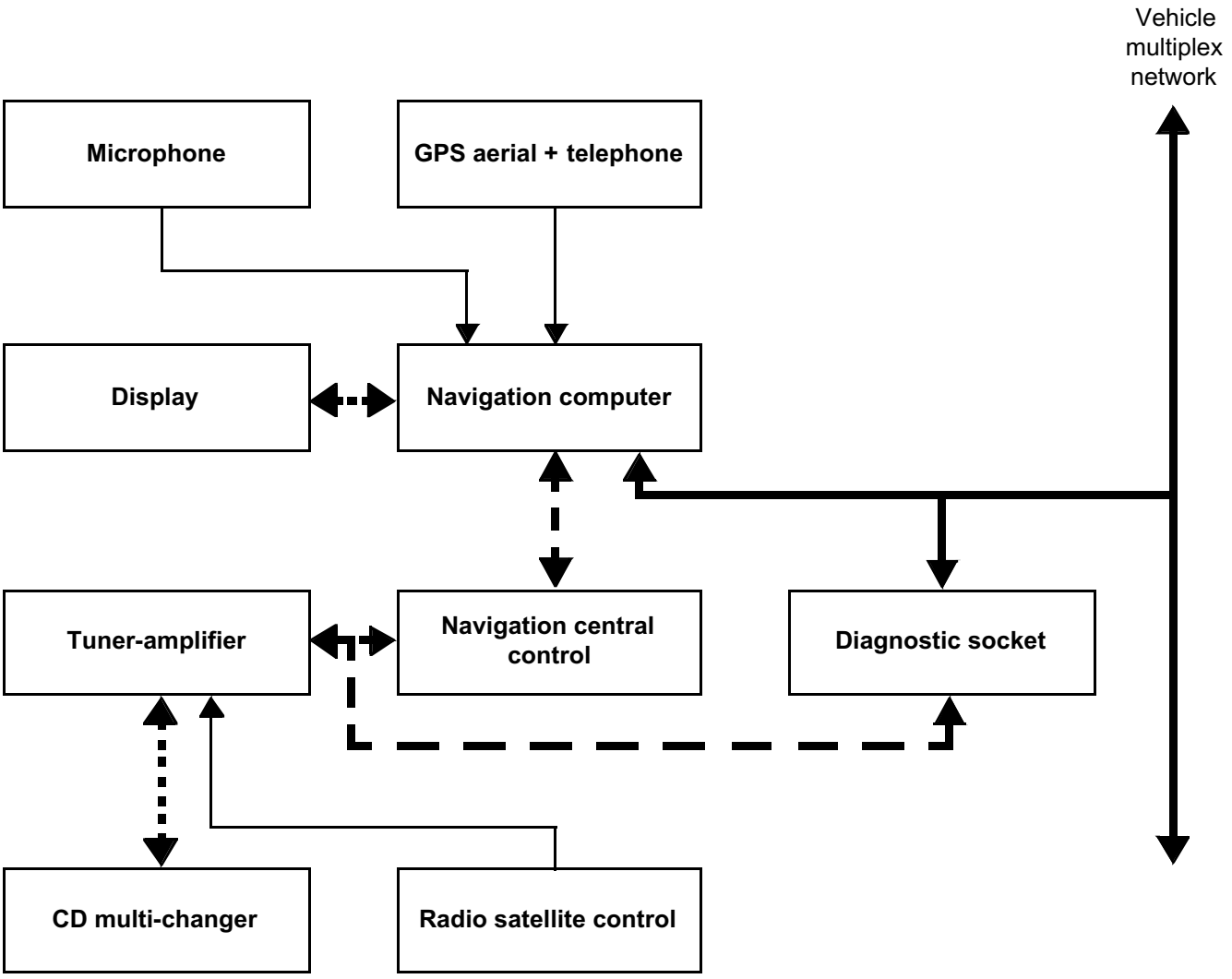

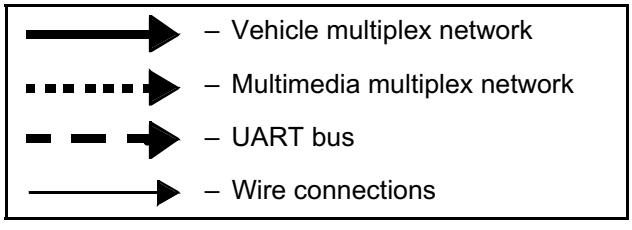

GETtheMANUALS.org

Navigation computer

Computer track	Description	Sensor - actuator track
	Connector A (32-track)	
1	Vehicle Multiplex line L	track 14 of the diagnostic socket
2	CAN L multimedia 1	track 12 of the navigation central control
3	not in use	
4	vehicle speed signal	ABS/ESP computer track 24
5	not in use	
6	lighting dimmer - control	track 12 of the CD multi-changer, track 9 of the navigation central control, track 2 of the dimmer control, track 4 of the instrument panel.
7	not in use	
8	not in use	
9	not in use	
10	signal 1 video display	track 16 display
11	video signal	track 10 display
12	video signal	track 12 display
13	not in use	
14	RGB blue video signal	track 22 display
15	RGB red video signal	track 24 display
16	not in use	
17	Vehicle Multiplex line H	track 6 of the diagnostic socket
18	Multimedia multiplex connection H 1	track 6 navigation central control
19	not in use	
20	Reversing lights + control	track 8 of the UCH black connector
21	not in use	
22	+ left-hand side lights	track 4 of the passenger compartment fuse and relay box connector CGB2-A
23	video signal shielding braid	track 8 display
24	not in use	

GETtheMANUALS.org

Computer track	Description	Sensor - actuator track
25	video control shielding braid	track 4 display
26	signal 2 video display	track 15 display
27	video signal	track 11 display
28	shielding braid	track 5 display
29	RGB earth signals	track 9 display
30	RGB green video signal	track 23 display
31	not in use	
32	not in use	

GETtheMANUALS.org

Computer track	Description	Sensor - actuator track
	Connector B (40-track)	
1	not in use	
2	not in use	
3	not in use	
4	not in use	
5	not in use	
6	not in use	
7	not in use	
8	not in use	
9	not in use	
10	not in use	
11	not in use	
12	not in use	
13	not in use	
14	- navigation voice	track 14 connector D (32-track) of the tuner-amplifier
15	+ navigation voice	track 30 connector D (32-track) of the tuner-amplifier
16	+ telephone voice	track 32 connector D (32-track) of the tuner-amplifier
17	microphone signal	track 2 of the car phone hands-free microphone
18	+ microphone	track 3 of the car phone hands-free microphone
19	not in use	
20	+ battery feed	track 2 of the F50 unit fuse
21	not in use	
22	not in use	
23	not in use	
24	not in use	
25	not in use	
26	not in use	

GETtheMANUALS.org

Computer track	Description	Sensor - actuator track
27	not in use	
28	not in use	
29	not in use	
30	not in use	
31	not in use	
32	not in use	
33	not in use	
34	shielding braid	track 31 connector D (32-track) of the tuner-amplifier
35	- telephone track	track 16 connector D (32-track) of the tuner-amplifier
36	shielding braid	track 15 connector D (32-track) of the tuner-amplifier
37	telephone microphone shielding	track 1 of the mobile phone hands-free microphone
38	multimedia wake-up signal	track 3 video display, track 1 navigation central control, track 14 tuner-amplifier C3 (8-track) connector, track 21 CD multi-changer
39	not in use	
40	earth	Track 13 of the video display, track 8 of the navigation central control, track 10 of the CD multi-changer

GETtheMANUALS.org

Tuner-amplifier

Tuner-amplifier track	Description	Sensor - actuator track
Connector A (8 track)		
1	vehicle speed signal input	ABS/ESP computer connector track 24
2	not in use	
3	not in use	
4	+ battery feed	track 2 of the unit fuse holder
5	AM/FM + aerial amplifier	track 1 aerial amplifier
6	not in use	
7	+ accessories feed	track 7 of the passenger compartment fuse and relay box connector CGB1-B
8	earth	

Tuner-amplifier track	Description	Sensor - actuator track
Connector B (8 track)		
1	+ rear right-hand speaker	track A1 rear right-hand speaker and tweeter speaker
2	- rear right-hand speaker	track A2 rear right-hand speaker and tweeter speaker
3	+ front right-hand speaker	track A1 front right-hand speaker and tweeter speaker
4	- front right-hand speaker	track A2 front right-hand speaker and tweeter speaker
5	+ front left-hand speaker	track A1 front left-hand speaker and tweeter speaker
6	- front left-hand speaker	track A2 front left-hand speaker and tweeter speaker
7	+ rear left-hand speaker	track A1 rear left-hand speaker and tweeter speaker
8	- rear left-hand speaker	track A2 rear left-hand speaker and tweeter speaker

GETtheMANUALS.org

Tuner-amplifier track	Description	Sensor - actuator track
	Connector C (20-track)	
C1		
1	not in use	
2	not in use	
3	not in use	
4	not in use	
5	not in use	
6		
C2		
7	- CD multi-changer left-hand audio signal	track 5 of the CD multi-changer
8	+ CD multi-changer left-hand audio signal	track 17 of the CD multi-changer
9	shielding braid	track 18 of the CD multi-changer
10	- CD multi-changer right-hand audio signal	track 7 of the CD multi-changer
11	+ CD multi-changer right-hand audio signal	track 19 of the CD multi-changer
12	not in use	
C3		
13	not in use	
14	multimedia wake-up signal	track 21 of the CD multi-changer, track 1 navigation central control, track 3 of the display, track 38 of the navigation assistance computer 40-track connector.
15	not in use	
16	not in use	
17	shielding braid	track 13 of the CD multi-changer
18	CD control signal	track 2 of the CD multi-changer
19	CD transmission control signal	track 14 of the CD multi-changer
20	CD reception control signal	track 1 of the CD multi-changer

GETtheMANUALS.org

Tuner-amplifier track	Description	Sensor - actuator track
	Connector D (32-track)	
1	not in use	
2	not in use	
3	not in use	
4	not in use	
5	not in use	
6	not in use	
7	not in use	
8	line 1 radio satellite control information display	track B2 radio satellite control
9	row 2 radio satellite control information display	track A3 radio satellite control
10	row 0 radio satellite control information display	track B3 radio satellite control
11	voice recognition activation button switch	track 2 3-track direction indicator stalk connector
12	not in use	
13	not in use	
14	voice guidance - signal input	track 14 navigation computer 40-track connector
15	telephone - audio signal shielding	track 36 navigation computer 40-track connector
16	telephone - audio signal input	track 35 navigation computer 40-track connector
17	multimedia CAN H	track 5 navigation central control
18	Multimedia CAN L	track 11 navigation central control
19	not in use	
20	not in use	
21	remote control signal earth	track 11 of the CD multi-changer
22	remote control signal input	track 23 of the CD multi-changer
23	not in use	

GETtheMANUALS.org

Tuner-amplifier track	Description	Sensor - actuator track
24	line 2 radio satellite control information display	track A2 radio satellite control
25	line 0 radio satellite control information display	track B1 radio satellite control
26	row 1 radio satellite control information display	track A1 radio satellite control
27	not in use	track 14 of the UCH black connector
28	not in use	
29	not in use	
30	guidance audio + signal input	track B15 navigation computer
31	guidance audio signal cable shielding	track B34 navigation computer
32	telephone audio + signal input	track B16 navigation computer

GETtheMANUALS.org

Display

Display track	Description	Sensor - actuator track
24-track connector		
1	not in use	
2	not in use	
3	multimedia wake-up signal	track 38 navigation computer 40-track connector, voice 1 navigation central control, track 14 tuner-amplifier C3 (8-track) connector, track 21 CD multi-changer
4	shielding braid	track 25 of the navigation computer 32-track connector
5	shielding braid	track 28 of the navigation computer 32-track connector
6	not in use	
7	not in use	
8	shielding braid	track 23 of the navigation computer 32-track connector
9	RGB video earth signals	track 29 of the navigation computer 32-track connector
10	video signal	track 11 of the navigation computer 32-track connector
11	video signal	track 27 of the navigation computer 32-track connector
12	video signal brightness	track 12 of the navigation computer 32-track connector
13	earth	track 8 of the navigation computer, track 40 of the 40-track connector, track 10 of the CD multi-changer
14	+ battery feed	track 2 of the F50 unit fuse
15	video display control 2 signal	track 26 of the navigation computer 32-track connector
16	video display control 1 signal	track 10 of the navigation computer 32-track connector
17	not in use	
18	not in use	
19	not in use	
20	not in use	
21	not in use	

GETtheMANUALS.org

Display track	Description	Sensor - actuator track
22	RGB blue video signal	track 14 of the navigation computer 32-track connector
23	RGB green video signal	track 30 navigation computer 32-track connector
24	RGB red video signal	track 15 of the navigation computer 32-track connector

GETtheMANUALS.org

Navigation central control

Navigation central control track	Description	Sensor - actuator track
12-track connector		
1	multimedia wake-up signal	track 38 navigation computer 40-track connector, voice 3 display, track 14 tuner-amplifier C3 (8-track) connector, track 21 CD multi-changer
2	not in use	
3	not in use	
4	not in use	
5	multimedia CAN H	track 13 of the diagnostic socket, track 6 of the instrument panel grey connector
6	multimedia CAN H	track 18 of the navigation computer 32-track connector
7	+ battery feed	track 2 of the F50 unit fuse
8	earth	track 13 of video display, track 40 of the 40-track connector, track 10 of the CD multi-changer
9	lighting dimmer - control	track 12 of the CD multi-changer, track 6 of the 32-track navigation assistance computer, track 2 of the dimmer control.
10	+ left-hand side lights	track 4 of the passenger compartment fuse and relay box connector CGB2-A
11	Multimedia CAN L	track 12 of the diagnostic socket, track 7 of the instrument panel grey connector
12	multimedia CAN L diagnostic socket	track 2 of the navigation computer 32-track connector

GETtheMANUALS.org

CD multi-changer

CD multi-changer track	Description	Sensor - actuator track
	12-track connector	
1	CD reception control signal	track 20 of the tuner-amplifier C3 connector
2	CD control test signal	track 18 of the tuner-amplifier C3 connector
3	+ accessories feed	track 7 of the passenger compartment fuse and relay box connector CGB1-B
4	not in use	
5	- CD left-hand audio	track 7 of the tuner-amplifier C2 connector
6	not in use	
7	- CD right-hand audio	track 10 of the tuner-amplifier C2 connector
8	not in use	
9	not in use	
10	earth	track 8 of the navigation central control, track 13 of the video display, track 40 of the 40-track navigation computer
11	+ remote control command	track 21 connector D (32-track) of the tuner-amplifier
12	lighting dimmer - control	track 13 of the tuner-amplifier connector C3, track 9 of the navigation central control, track 6 of the navigation assistance computer 32-track connector, track 2 of the dimmer control.
13	shielding braid	track 17 of the tuner-amplifier C3 connector
14	CD transmission control signal	track 19 of the tuner-amplifier C3 connector
15	+ after ignition feed	track 3 of the passenger compartment fuse and relay box connector CGB1-A
16	not in use	
17	+ CD left-hand audio	track 8 of the tuner-amplifier C2 connector
18	shielding braid	track 9 of the tuner-amplifier C2 connector
19	+ CD right-hand audio	track 11 of the tuner-amplifier C2 connector
20	not in use	
21	multimedia wake-up signal	track 38 navigation computer 40-track connector, track 3 display, track 14 tuner-amplifier connector C3 (8-track), track 1 navigation central control

GETtheMANUALS.org

CD multi-changer track	Description	Sensor - actuator track
22	+ battery feed	track 2 of the F50 unit fuse
23	- infrared remote control	track 22 of the tuner-amplifier 32-track connector
24	+ left-hand side lights	track 4 of the passenger compartment fuse and relay box connector CGB2-A

GETtheMANUALS.org

For removal/refitting of this computer (see **MR 405 Mechanical, 83C, Navigation system on-board telematics system: Removal - Refitting**).

Procedures to be carried out before replacing the navigation computer:

1. Before replacing the computer (with the agreement of the Techline), read the faults and carry out a conformity check to ensure that it is definitely faulty.

2. Before removing the computer, clear the customer's data (telephone numbers, customer address book, etc.) using command **RZ003 Parameters and customer data** in the diagnostic tool.

3. After receiving the Techline's approval, remove the computer with the ignition off.

The navigation computers available from the Parts Department are supplied unconfigured and in factory mode (tuner-amplifier set to 162 kHz AM, and it beeps for 2 minutes).

Procedures to be carried out after replacing the navigation computer:

1. Enter the unlocking code for the CARMINAT NAVIGATION and COMMUNICATION system.

– How to obtain the unlocking code for the Carminat Navigation and Communication system

  – switch on the + after ignition feed,
  – switch on the CARMINAT NAVIGATION and COMMUNICATION system,
  – connect the Clip diagnostic tool,
  – note the navigation programming key number given in the **Identification** menu,
  – contact Techline with this navigation programming number to obtain the CARMINAT NAVIGATION and COMMUNICATIONS system unlocking code,
  – the unlocking code is requested 2 mins after the CARMINAT NAVIGATION and COMMUNICATION system comes on,
  – enter this code using the navigation central control.

Note:
If the code is incorrect, you will have to wait between 2 and 32 minutes before you can enter a code again.
Delete the incorrect code before entering the new one.

GETtheMANUALS.org

2. Configure the computer (see **Configurations and Programming**).

– The two configurations to enter are **CF001 Vehicle type** and **VP004 Netherlands legislation**

Note:
(only for vehicles registered in the Netherlands)
If the computer is replaced. Depending on the manufacturing date of the vehicle:
– BEFORE 01 JANUARY 2006, it is essential to run command VP004 “Netherlands Legislation” (LC002 Netherlands)
– AFTER 01 JANUARY 2006, command VP004 Netherlands Legislation (LC002 Except Netherlands) must not be run under any circumstances.

3. Enter the VIN code (see **Dealing with commands**).

– The command for entering the VIN code is **VP002 Write VIN**.

GETtheMANUALS.org

Configurations available and operating mode

– **Vehicle type (CF001):**

This configuration enables the system to identify the vehicle in which it is installed.

– **NETHERLANDS LEGISLATION (VP004):**

IMPORTANT
Running command NETHERLANDS LEGISLATION initialises the computer according to this country's legislation. This configuration is IRREVERSIBLE: it is not possible to clear this selection.

Note:
(only for vehicles registered in the Netherlands)
If the computer is replaced. Depending on the manufacturing date of the vehicle:
– BEFORE 01 JANUARY 2006, it is essential to run command VP004 “Netherlands Legislation” (LC002 Netherlands)
– AFTER 01 JANUARY 2006, command VP004 Netherlands Legislation (LC002 Except Netherlands) must not be run under any circumstances.

List of individual configurations available on the diagnostic tool with the associated configuration reading

Configuration	Configuration reading	Name of configuration	Choice of configuration
CF001	**LC001**	**Vehicle type**	**Vel Satis ph 2/Espace IV Laguna II ph2/Scénic II**
VP004	**LC002**	**Country type**	**Except Netherlands Netherlands**

Procedure to be followed to modify the vehicle type (Netherlands legislation is irreversible)
- Establish dialogue with the computer.
- Select the menu **repair mode**.
- Select the **Write configuration** menu.
- Select the line corresponding to the configuration to be modified.
- Select the line in the drop-down menu that corresponds to the vehicle.
- Click on **Confirm**.
- Exit diagnostic mode (ends dialogue with the computer without switching off the tool), switch off the ignition for 5 seconds and then switch the ignition back on.
- Establish dialogue with the computer.
- In the **Read configuration** menu, check that the configuration has been completed.

Programming

There is no programming on the navigation and communication system tool.

GETtheMANUALS.org

Summary of faults that can be diagnosed by the navigation computer, with corresponding technical center codes.

Tool fault	Associated DTC	Diagnostic tool title
DF001	**D010**	Computer
DF002	**D011**	Computer
DF003	**9A01**	Computer
DF004	**9A02**	Computer
DF005	**9A03**	Computer
DF006	**9A04**	Computer
DF007	**9A07**	Computer
DF008	**9A08**	Computer
DF009	**9A10**	Computer
DF010	**9A0D**	Computer
DF021	**C300**	Computer configuration
DF022	**C186**	No radio multiplex signal
DF023	**9A06**	No display multiplex signal
DF024	**C155**	No instrument panel multiplex signal
DF025	**C163**	No central control multiplex signal
DF027	**C189**	No CD multi-changer audio signal
DF029	**9A0C**	Navigation DVD reader
DF030	**9A00**	GPS aerial circuit

GETtheMANUALS.org

DF001 **DF002** **DF003** **DF004** **DF005** **DF006** **DF007** **DF008** **DF009** **DF010** **PRESENT** **OR** **STORED**	COMPUTER 1.DEF : internal electronic fault

NOTES	**Conditions for applying the fault finding procedure to a stored fault:** Apply this fault finding procedure if the fault reappears as present or stored after it has been cleared and the ignition has been switched off and on again.

If the fault is stored, clear the fault, switch off the ignition and disconnect computer supply fuse F50 (**20A**).
– Refit the fuse and switch the ignition back on.
– Turn on the navigation system.
If the fault reappears as stored, contact Techline.
If the fault does not reappear: operate the navigation system, including the CD multi-changer, the amplifier-tuner and the hands-free telephone integrated control (if present on the vehicle) to check that the system is operating correctly.

Check the conformity of **+ 12 V** on **track 20** of the navigation computer 40-track connector.
Check that the **earth** on **track 40** of the navigation computer 40-track connector is in perfect condition.
Repair if necessary.

If the fault is present, contact your Techline.

AFTER REPAIR	If the computer was replaced (at the request of the Techline), reconfigure the computer (see **Configurations and programming**). Deal with any other faults.

GETtheMANUALS.org

DF021 PRESENT OR STORED	COMPUTER CONFIGURATION 1.DEF: blank or incomplete configuration

NOTES	None.

If the fault is present, carry out the system configurations (see **86C, Configurations and programming**).

After the configuration, switch off the ignition for 5 seconds then switch the ignition back on again.

Check that the configurations have been correctly registered by reading configurations **LC001 Vehicle Type** and **LC002 Country type**.

If the fault is still present, contact the Techline.

If the fault is stored, clear the faults using command **RZ001 Fault memory**.

AFTER REPAIR	Carry out another fault finding check on the system. Clear the stored faults. Deal with any other faults.

GETtheMANUALS.org

DF022 PRESENT OR STORED	NO RADIO MULTIPLEX SIGNAL

NOTES	**Conditions for applying the fault finding procedure to a stored fault:** Apply this fault finding procedure if the fault reappears as present or stored after the fault has been cleared, the ignition switched off and back on again and the tuner-amplifier started after several operations.
	If faults **DF022 No radio multiplex fault** and **DF027 No CD multi-changer signal** are both present, check the multimedia multiplex network (see **88B, Multiplex**).

Check the condition and connection of the tuner-amplifier 32-track connector in the glovebox (broken, bent, oxidised tabs).
Repair if necessary.

Check the condition and connection of the navigation central control connector (broken, bent, oxidised tabs).
Repair if necessary.

Check the condition and connection of the navigation computer 32-track connector (broken, bent, oxidised tabs).
Repair if necessary.

Check the **insulation, continuity and the absence of interference resistance** on the following connections:

central control connector **track 5** → **track 17** 32-track tuner-amplifier connector
central control connector **track 11** → **track 18** 32-track tuner-amplifier connector
central control connector **track 6** → **track 18** 32-track navigation computer connector
central control connector **track 12** → **track 2** 32-track navigation computer connector

Repair if necessary.

If the fault is still present, contact the Techline.

AFTER REPAIR	Carry out another fault finding check on the system. Clear the stored faults. Deal with any other faults.

GETtheMANUALS.org

DF023 PRESENT OR STORED	NO DISPLAY MULTIPLEX SIGNAL 1.DEF: no communication with the display 2.DEF: display malfunction

NOTES	**Conditions for applying the fault finding procedure to a stored fault:** Apply this fault finding procedure if the fault reappears as present or stored after it has been cleared, the ignition turned off and on again and the navigation system started.

1.DEF	***NOTES***	None

Check the condition and connection of the display connector (bent, oxidised, broken tabs).
Repair if necessary.

Check the condition and connection of the navigation computer 32-track connector (broken, bent, oxidised tabs).
Repair if necessary.

Check the **insulation, continuity and the absence of interference resistance** on the following connections:

- display connector **track 4** → **track 25** 32-track navigation computer connector
- display connector **track 5** → **track 28** 32-track navigation computer connector
- display connector **track 8** → **track 23** 32-track navigation computer connector
- display connector **track 9** → **track 29** 32-track navigation computer connector
- display connector **track 10** → **track 11** 32-track navigation computer connector
- display connector **track 11** → **track 27** 32-track navigation computer connector
- display connector **track 12** → **track 12** 32-track navigation computer connector
- display connector **track 15** → **track 26** 32-track navigation computer connector
- display connector **track 16** → **track 10** 32-track navigation computer connector
- display connector **track 22** → **track 14** 32-track navigation computer connector
- display connector **track 23** → **track 30** 32-track navigation computer connector
- display connector **track 24** → **track 15** 32-track navigation computer connector

Repair if necessary.

If the fault is still present, contact the Techline.

AFTER REPAIR	Carry out another fault finding check on the system. Clear the stored faults. Deal with any other faults.

GETtheMANUALS.org

DF023 CONTINUED	

2.DEF	***NOTES***	None

Check the condition and connection of the display connector (bent, oxidised, broken tabs). Repair if necessary.
With the ignition on, check for **12 V** on **track 14** of the display. Check that the **earth** on **track 13** of the display is in perfect condition. Repair if necessary.
If the fault is still present, replace the display.

AFTER REPAIR	Carry out another fault finding check on the system. Clear the stored faults. Deal with any other faults.

GETtheMANUALS.org

DF024 PRESENT OR STORED	INSTRUMENT PANEL MULTIPLEX SIGNAL ABSENT

NOTES	**Conditions for applying the fault finding procedure to a stored fault:** Apply this fault finding procedure if the fault reappears as present or stored after a fault has been cleared and the ignition has been switched off and on again

Carry out a fault finding procedure on the instrument panel (see **83A, Instrument panel**).
Repair if necessary.

Check the condition and connection of the navigation computer 32-track connector (broken, bent, oxidised tabs).
Repair if necessary.

Check the condition and connection of the instrument panel red connector (bent, oxidised, broken tabs).
Repair if necessary.

Check the **insulation, continuity and the absence of interference resistance** on the following connections:

32-track connector of the navigation computer **track 17** → **track 9** red instrument panel connector

32-track connector of the navigation computer **track 1** → **track 8** red instrument panel connector

Repair if necessary.

If the fault is still present, contact the Techline.

AFTER REPAIR	Carry out another fault finding check on the system. Clear the stored faults. Deal with any other faults.

GETtheMANUALS.org

DF025 PRESENT OR STORED	NO CENTRAL CONTROL MULTIPLEX SIGNAL 1.DEF: no communication with the central control

NOTES	**Conditions for applying the fault finding procedure to a stored fault:** Apply this fault finding procedure if the fault reappears as present or stored after the fault has been cleared, the ignition switched off and back on again and the navigation system started after using the central control several times.
	If faults **DF022 No radio multiplex fault, DF025 No central control multiplex signal** and **DF027 No CD multi-changer audio signal** are all present, check the multimedia network (see **88B, Multiplex**).

Check the condition and connection of the central control connector (broken, bent, oxidised tabs).
Repair if necessary.

Check the condition and connection of the navigation computer 32-track connector (broken, bent, oxidised tabs).
Repair if necessary.

Check the **insulation, continuity and the absence of interference resistance** on the following connections:
central control connector **track 6** → **track 18** 32-track navigation computer connector
central control connector **track 12** → **track 2** 32-track navigation computer connector
Repair if necessary.

If the fault is still present, contact the Techline.

AFTER REPAIR	Carry out another fault finding check on the system. Clear the stored faults. Deal with any other faults.

GETtheMANUALS.org

DF027 PRESENT OR STORED	NO AUDIO CD CHANGER SIGNALS 1.DEF: no communication with the CD multi-changer keypad

NOTES	**Conditions for applying the fault finding procedure to a stored fault:** Apply this fault finding procedure if the fault reappears as present or stored after the fault has been cleared, the ignition switched off and back on again and the audio system started after using the CD multi-changer several times.
	Order of priority in the event of more than one fault: Deal with fault **DF022 No radio multiplex fault** first.

Check the condition and connection of the CD multi-changer connector (broken, bent, oxidised tabs).
Repair if necessary.

Check the condition and connection of the tuner-amplifier C2 (green) connector (in the glovebox) (broken, bent, oxidised tabs).
Repair if necessary.

Check the **insulation, continuity and the absence of interference resistance** on the following connections:

- CD changer connector **track 1** → **track 20** connector C3 (blue) of the tuner-amplifier
- CD changer connector **track 2** → **track 18** connector C3 (blue) of the tuner-amplifier
- CD changer connector **track 13** → **track 17** connector C3 (blue) of the tuner-amplifier
- CD changer connector **track 14** → **track 19** connector C3 (blue) of the tuner-amplifier

Repair if necessary.

If the fault is still present, contact the Techline.

AFTER REPAIR	Carry out another fault finding check on the system. Clear the stored faults. Deal with any other faults.

GETtheMANUALS.org

DF029 PRESENT OR STORED	NAVIGATION DVD READER 1.DEF: unreadable disc

NOTES	**Conditions for applying the fault finding procedure to a stored fault:** Apply this fault finding procedure if the fault reappears as present or stored after the fault has been cleared, the ignition switched off and back on again and the navigation system started with a navigation DVD in good condition.

Check that the DVD is inserted the right way up.
Check that the DVD in the navigation computer is not an audio CD or other type but a navigation DVD designed for this navigation system.
Wipe the DVD from the centre out with a soft, clean cloth.
Replace the navigation DVD if it is scratched.

AFTER REPAIR	Carry out another fault finding check on the system. Clear the stored faults. Deal with any other faults.

GETtheMANUALS.org

DF030 PRESENT OR STORED	GPS AERIAL CIRCUIT CO : open circuit

NOTES	**Conditions for applying the fault finding procedure to the stored fault:** Apply this fault finding procedure if the fault reappears as present or stored after a fault has been cleared and the ignition has been switched off and on again.

Check the condition and connection of the GPS aerial 2-track connector (bent, oxidised, broken tabs). Repair if necessary.
Check the condition and connection of the navigation computer 2-track connector (broken, bent, oxidised tabs). Repair if necessary.
Check the **insulation, continuity and the absence of interference resistance** on the following connections: 2-track computer connector **track 1** ⟶ **track 1** GPS aerial connector 2-track computer connector **track 2** ⟶ **track 2** GPS aerial connector Repair if necessary.
If the connections are correct, replace the GPS aerial.
If the fault is still present, contact the Techline.

AFTER REPAIR	Carry out another fault finding check on the system. Clear the stored faults. Deal with any other faults.

GETtheMANUALS.org

NOTES	Only carry out this conformity check after a **complete check** with the diagnostic tool (fault reading and configuration checks). **Application conditions:** Engine stopped, + after ignition feed switched on.

MAIN SCREEN

Order	Function	Parameter or Status Check or Action		Display and Notes	Fault finding
1	**Night-time lighting**	**ET003:**	+ 12 V side lights	**ON** **OFF**	In the event of a fault, refer to the interpretation of status **ET003**.
		PR007:	Night lighting level	**0% < X < 102%** **(max) (min)**	In the event of a fault, consult **the interpretation of parameter PR007**.
2	**Vehicle speed**	**PR002:**	Vehicle speed	**0 mph (0 km/h)**	In the event of a fault, **carry out fault finding on the ABS**.
3	**Reverse gear**	**ET024:**	Reverse gear engaged	**YES** **NO**	In the event of a fault, **refer to the interpretation of status ET024**.
4	**CD multi-changer**	**PR005:**	Number of CDs in the multi-changer	**0, 1, 2, 3, 4, 5 or 6**	None.

GETtheMANUALS.org

NOTES	Only carry out this conformity check after a **complete check** with the diagnostic tool (fault reading and configuration checks). **Application conditions:** Engine stopped, + after ignition feed switched on.

Sub-function: DRIVER SELECTION

Order	Function	Parameter or Status Check or Action		Display and Notes	Fault finding
1	**Radio satellite control**	**ET006:**	+ button	**DEPRESSED** **RELEASED**	In the event of a fault, consult **the interpretation of statuses ET006, ET007, ET008, ET009 and ET010**.
		ET007:	- button	**DEPRESSED** **RELEASED**	
		ET009:	Up button ( )	**DEPRESSED** **RELEASED**	
		ET010:	Down button (Mode - OK)	**DEPRESSED** **RELEASED**	
		ET008:	Top button (Audio Source)	**DEPRESSED** **RELEASED**	
		ET018:	Wheel action	**INACTIVE** **UPWARDS** **DOWNWARDS**	In the event of a fault, refer to **the interpretation of status ET018**.
2	**Communication connection button**	**ET017:**	Communication connection button (at the end of the direction indicator control)	**DEPRESSED** **RELEASED**	In the event of a fault, consult the **interpretation of status ET017**.

GETtheMANUALS.org

NOTES	Only carry out this conformity check after a **complete check** with the diagnostic tool (fault reading and configuration checks). **Application conditions:** Engine stopped, + after ignition feed switched on.

Sub-function: SOUND TESTS

Order	Function	Parameter or Status Check or Action	Display and Notes	Fault finding
1	**Speaker test**	**AC004:** Testing the speakers	This command enables the front left-hand, front right-hand, rear left-hand and rear right-hand speakers to be activated successively.	In the event of a fault, **apply the interpretation for command AC004**.

GETtheMANUALS.org

NOTES	Only carry out this conformity check after a **complete check** with the diagnostic tool (fault reading and configuration checks). **Application conditions:** Engine stopped, + after ignition feed switched on.

Sub-function: TESTS

Order	Function	Parameter or Status Check or Action		Display and Notes	Fault finding
1	**Screen**	**AC006:**	Screen test: colour bars	This command is used to test the colour connections between the navigation computer and the display.	In the event of a fault, **apply the procedure for dealing with command AC006**.
		AC007:	Screen test: shades of grey	This command is used to test the video connections between the navigation computer and the display.	In the event of a fault, **apply the procedure for dealing with command AC007**.
		AC008:	Screen test: white screen	This command is used to test the screen to see if a pixel from the display is out of order.	Replace the display if several pixels are out of order.
2	**Microphone**	**AC009:**	Microphone test	This command is for testing microphone operation. Note: If the environment is quiet, speak close to the microphone to check it is working.	In the event of a fault, **apply the procedure for dealing with command AC009**.

GETtheMANUALS.org

Tool status	Diagnostic tool title
ET003	+ 12 V side lights
ET006	+ button
ET007	Button -
ET008	Top button
ET009	Down button
ET010	Down button
ET017	Communication connection button
ET018	Wheel action
ET024	Reverse gear engaged

GETtheMANUALS.org

ET003	+ 12 V SIDE LIGHTS FEED

NOTES	**Check that the side lights are working. If not, carry out fault finding on the steering wheel and side light controls** (see **80D, Lighting**).

If no left-hand side light is working on the vehicle, check the condition and connection of connector CGB2-A in the passenger compartment fuse and relay box (tabs bent, broken, etc.).
Repair if necessary.
Check the condition of fuse **F4** (7.5A) on the passenger compartment fuse and relay box.
Replace the fuse if necessary.

Check the condition and connection of the navigation computer 32-track connector (broken, bent tabs etc.).
Repair if necessary.

Check the condition and connection of the navigation central control connector (broken, bent tabs, etc.).
Repair if necessary.

Check the condition and connection of the CD multi-changer connector (broken, bent tabs, etc.).
Repair if necessary.

Check **the insulation, continuity and the absence of interference resistance** on the following connection:
connector CGB2-A of the passenger compartment fuse and relay box **track 4** →
- **track 22** of the 32-track navigation computer connector
- **track 10** of the navigation central control connector
- **track 24** of the CD multi-changer connector

Repair if necessary.

If the fault is still present, contact the Techline.

AFTER REPAIR	Repeat the conformity check from the start.

GETtheMANUALS.org

ET006 **ET007** **ET008** **ET009** **ET010**	+ BUTTON – BUTTON TOP BUTTON UP BUTTON DOWN BUTTON

NOTES	**There must be no present or stored faults.**

Check the condition and connection of the radio satellite control 6-track connector (broken, bent, oxidised tabs).
Repair if necessary.

Check the condition and connection of the tuner-amplifier 32-track connector (broken, bent, oxidised tabs).
Repair if necessary.

Check **the insulation, continuity and the absence of interference resistance** of the connections between the radio satellite control connector and the tuner-amplifier 32-track connector:
32-track connector of the tuner-amplifier **track 8** → **track B2** of the radio satellite control connector
32-track connector of the tuner-amplifier **track 9** → **track A3** of the radio satellite control connector
32-track connector of the tuner-amplifier **track 10** → **track B3** of the radio satellite control connector
32-track connector of the tuner-amplifier **track 24** → **track A2** of the radio satellite control connector
32-track connector of the tuner-amplifier **track 25** → **track B1** of the radio satellite control connector
32-track connector of the tuner-amplifier **track 26** → **track A1** of the radio satellite control connector
Repair if necessary.

Carry out the following checks on the radio satellite control using an ohmmeter:
- When the + button is pressed the resistance should be **28 Ω** between **tracks A1** and **B1**
- When the + button is released there should be **insulation** between **tracks A1** and **B1**
- When the - button is pressed the resistance should be **0.5 Ω** between **tracks B1** and **B3**
- When the - button is released there should be **insulation** between **tracks B1** and **B3**
- When the top button is pressed the resistance should be **28 Ω** between **tracks B2** and **B3**
- When the top button is released there should be **insulation** between **tracks B2** and **B3**
- When the up button is pressed the resistance should be **28** Ω between **tracks A3** and **B2**
- When the up button is released there should be **insulation** between **tracks A3** and **B2**
- When the down button is pressed the resistance should be **28** Ω between **tracks A3** and **B1**
- When the down button is released there should be **insulation** between **tracks A3** and **B1**

If the measured values do not correspond with the values above, replace the radio satellite control.

If the fault is still present, contact the Techline.

AFTER REPAIR	Repeat the conformity check from the start.

GETtheMANUALS.org

ET017	COMMUNICATION CONNECTION BUTTON

NOTES	**There must be no present or stored faults.**

Check the condition and connection of the direction indicator control 3-track connector (broken, bent, oxidised tabs).
Repair if necessary.

Check the condition and connection of the tuner-amplifier 32-track connector (broken, bent, oxidised tabs).
Repair if necessary.

Check **the insulation, continuity and the absence of interference resistance** of the connection between the direction indicator control connector and the tuner-amplifier 32-track connector:
32-track connector of the tuner-amplifier **track 11** ⟶ **track 2** of the direction indicator control connector
Repair if necessary.

Check **the continuity** of the communication connection button:
– between **tracks 1** and **2** of the direction indicator control 3-track connector, with the communication connection button pressed.
If there is no continuity, replace the direction indicator control.

Make sure that the **earth** on **track 1** of the direction indicator control connector is in perfect condition.

If the fault is still present, contact the Techline.

AFTER REPAIR	Repeat the conformity check from the start.

GETtheMANUALS.org

ET018	WHEEL ACTION

NOTES	**There must be no present or stored faults.**

Check the condition and connection of the radio satellite control 6-track connector (broken, bent, oxidised tabs).
Repair if necessary.

Check the condition and connection of the tuner-amplifier 32-track connector (broken, bent, oxidised tabs).
Repair if necessary.

Check **the insulation, continuity and the absence of interference resistance** of the connections between the radio satellite control connector and the tuner-amplifier 32-track connector:

- 32-track connector of the tuner-amplifier **track 9** → **track A3** of the radio satellite control connector
- 32-track connector of the tuner-amplifier **track 10** → **track B3** of the radio satellite control connector
- 32-track connector of the tuner-amplifier **track 26** → **track A1** of the radio satellite control connector
- 32-track connector of the tuner-amplifier **track 24** → **track A2** of the radio satellite control connector

Repair if necessary.

Check **the continuity** of the radio satellite control:
– between **tracks A2** and **A1**.
– between **tracks A2 and A3**.
– between **tracks A2 and B3**.
(see **MR 405 Mechanical, 86A, Radio control satellite: Removal - Refitting**).
If there is no continuity, replace the radio satellite control.

If the fault is still present, contact the Techline.

AFTER REPAIR	Repeat the conformity check from the start.

GETtheMANUALS.org

ET024	REVERSE GEAR ENGAGED

NOTES	**There must be no present or stored faults.**

Run a vehicle multiplex network test (see **88B, Multiplex**).
Carry out fault finding on the UCH (see **87B, Passenger Compartment Connection Unit**).
Check the condition and connection of the navigation computer 32-track connector (broken, bent, oxidised tabs). Repair if necessary.
Check the condition and connection of the UCH P100 connector (bent, oxidised, broken tabs). Repair if necessary.
Check **the insulation, continuity and the absence of interference resistance** of the connection between the UCH P100 connector and the navigation computer 32-track connector: UCH P100 connector **track 8** ⟶ **track 20** of the 32-track navigation computer connector Repair if necessary.
If the fault is still present, contact the Techline.

AFTER REPAIR	Repeat the conformity check from the start.

GETtheMANUALS.org

Tool Parameter	Diagnostic tool title
PR002	Vehicle speed
PR005	Number of CDs in the multi-changer
PR007	Night lighting level

GETtheMANUALS.org

PR007	NIGHT LIGHTING LEVEL

NOTES	Only apply the checks if the parameter is inconsistent.
	There must be no present or stored faults.

Night lighting not working

Check the condition and connection of the lighting dimmer 3-track connector (tabs bent, broken, etc.). Repair if necessary.
Check for **+ 12 V** on **track 1** of the lighting dimmer connector. Check the presence and condition of fuse **F4** (7.5A) on the passenger compartment fuse and relay box. Replace the fuse and repair if necessary.
Ensure that the **earth** on **track 3** of the lighting dimmer is in perfect condition. Repair if necessary.
If the fault is still present, replace the lighting dimmer.

AFTER REPAIR	Repeat the conformity check from the start.

GETtheMANUALS.org

PR007 CONTINUED	

One or more components have no night lighting

Check the condition and connection of the navigation computer 32-track connector (broken, bent tabs etc.). Repair if necessary.
Check the condition and connection of the navigation central control connector (broken, bent tabs, etc.). Repair if necessary.
Check the condition and connection of the CD multi-changer connector (broken, bent tabs, etc.). Repair if necessary.
Check the condition and connection of the radio connector C3 (tabs broken or bent, etc.). Repair if necessary.
Check the **insulation, continuity and the absence of interference resistance** on the following connections: lighting dimmer connector **track 2** → **track 12 CD changer connector** → **track 9** of the navigation central control connector → **track 6** of the navigation computer 32-track connector Repair if necessary.
If the fault is still present, contact the Techline.

AFTER REPAIR	Repeat the conformity check from the start.

GETtheMANUALS.org

CLEARING	
RZ001	Fault memory
RZ002	Computer memory
RZ003	Parameters and customer information
SETTINGS	
VP002	Enter VIN
VP004	Netherlands legislation
ACTUATION	
AC004	Testing the speakers
AC006	Screen test: colour bars
AC007	Screen test: shades of grey
AC008	Screen test: white screen
AC009	Microphone test

GETtheMANUALS.org

RZ001 Fault memory:

This command is used to clear faults stored in the navigation computer.

RZ002 Computer memory:

This command enables the configuration **CF001 Vehicle Type** for the navigation computer to be removed.

IMPORTANT
The configuration **NETHERLANDS** is **IRREVERSIBLE**. This selection cannot be cleared.

RZ003 Customer parameters and data

This command is used to erase command configurations **RZ002 "Computer memory"** + the address book, centre of interest, and navigation adjustments recorded by the customer in the navigation computer.
This command is also used to clear telephone numbers stored in the navigation computer and the list of received and dialled calls when the telephone is connected to the vehicle.

IMPORTANT
This command must be activated before removing the computer.

Clearing procedure
- Establish dialogue with the navigation computer.
- Select the menu **repair mode**.
- Select the **Clear** menu.
- Select the line of your choice.
- Confirm.

VP002 Write VIN:
This command permits manual entry of the vehicle's VIN into the computer. Use this command each time the computer is replaced. The VIN number is inscribed on the manufacturer's plate.

Procedure for writing the VIN
- Establish dialogue with the navigation computer.
- Select the menu **repair mode**.
- Select the **other parameters** menu.
- Select line **VP002 Write VIN**.
- Enter the VIN.
- Exit fault finding mode.
- Switch off the ignition.
- Wait for the end of power latch.
- Read the VIN again from the **Identification** menu for confirmation.

GETtheMANUALS.org

AC006	SCREEN TEST: COLOUR BARS

NOTES	**There must be no present or stored faults.**

Apply this procedure if one or more colour options are missing from the display when the command is activated.

Check the condition and connection of the display connector (bent, oxidised, broken tabs, etc.).
Repair if necessary.

Ensure that the **earth** on **track 9** of the display connector is in perfect condition.
Repair if necessary.

Check for **+ 12 V** on track **14** of the display connector**.**
Check the presence and condition of fuse **F50** (20A).
Replace the fuse and repair if necessary.

Check the condition and connection of the navigation computer 32-track connector (broken, bent, oxidised tabs etc.).
Repair if necessary.

Check the **insulation, continuity and the absence of interference resistance** on the following connections:

- display connector **track 8** → **track 23** 32-track navigation computer connector
- display connector **track 9** → **track 29** 32-track navigation computer connector (earth)
- display connector **track 22** → **track 14** 32-track navigation computer connector (blue)
- display connector **track 23** → **track 30** 32-track navigation computer connector (green)
- display connector **track 24** → **track 15** 32-track navigation computer connector (red)

Repair if necessary.

If these checks are consistent but the colours shown on the display are incorrect, replace the display.

AFTER REPAIR	Carry out another fault finding check on the system.

GETtheMANUALS.org

AC007	SCREEN TEST: GRADATION OF GREY

NOTES	**There must be no present or stored faults.**

Apply this procedure if the shade of grey shown on the display when the command is activated is incorrect.

Check the condition and connection of the display connector (bent, oxidised, broken tabs, etc.).
Repair if necessary.

Ensure that the **earth** on **track 9** of the display connector is in perfect condition.
Repair if necessary.

Check for **+ 12 V** on track **14** of the display connector.
Check the presence and condition of fuse **F50** (20A).
Replace the fuse and repair if necessary.

Check the condition and connection of the navigation computer 32-track connector (broken, bent, oxidised tabs etc.).
Repair if necessary.

Check the **insulation, continuity and the absence of interference resistance** on the following connections:

- display connector **track 4** → **track 25** 32-track navigation computer connector
- display connector **track 5** → **track 28** 32-track navigation computer connector
- display connector **track 10** → **track 11** 32-track navigation computer connector
- display connector **track 11** → **track 27** 32-track navigation computer connector
- display connector **track 12** → **track 12** 32-track navigation computer connector
- display connector **track 15** → **track 26** 32-track navigation computer connector
- display connector **track 16** → **track 10** 32-track navigation computer connector

Repair if necessary.

If these checks are correct but the shade of grey shown on the display is incorrect, replace the display.

AFTER REPAIR	Carry out another fault finding check on the system.

GETtheMANUALS.org

AC009	MICROPHONE TEST

NOTES	**There must be no present or stored faults.**

Apply this procedure if the **Faulty connection** message appears when these commands are activated.

Check the condition and connection of the microphone connector (bent, oxidised, broken tabs).
Repair if necessary.

Check the condition and connection of the navigation computer 40-track connector (broken, bent, oxidised tabs).
Repair if necessary.

Check the **insulation, continuity and the absence of interference resistance** on the following connections:

- microphone connector **track 1** → **track 37** 40-track navigation computer connector
- microphone connector **track 2** → **track 17** 40-track navigation computer connector
- microphone connector **track 3** → **track 18** 40-track navigation computer connector

Repair if necessary.

If these checks are correct but the microphone is not working, replace the microphone.

AFTER REPAIR	Carry out another fault finding check on the system.

GETtheMANUALS.org

AC004	SPEAKER TEST

NOTES	**There must be no present or stored faults.** **This command activates the front left-hand and front right-hand treble speakers and the front right-hand, rear right-hand, front left-hand and rear left-hand bass speakers.**

Check the condition and connection of the tuner-amplifier connector B (broken, bent, oxidised tabs, etc.).
Repair if necessary.

Check the condition and connection of the defective speaker connector (bent, broken tabs, etc.).
Repair if necessary.

Check the **insulation, continuity and the absence of interference resistance** on the following connections:

- radio connector B **track 1** → **track A1** connector for rear right-hand speaker and rear right-hand tweeter
- radio connector B **track 2** → **track A2** connector for rear right-hand speaker and rear right-hand tweeter
- radio connector B **track 3** → **track A1** connectors for door speakers and front right-hand tweeter
- radio connector B **track 4** → **track A2** connectors for door speakers and front right-hand tweeter
- radio connector B **track 5** → **track A1** connectors for door speakers and front left-hand tweeter
- radio connector B **track 6** → **track A2** connectors for door speakers and front left-hand tweeter
- radio connector B **track 7** → **track A1** connector for rear left-hand speaker and rear left-hand tweeter
- radio connector B **track 8** → **track A2** connector for rear left-hand speaker and rear left-hand tweeter

Repair if necessary.

If these tests are correct but one or more speakers do not work, replace the faulty speaker or speakers.

If the fault is still present, contact Techline.

AFTER REPAIR	Carry out another fault finding check on the system.

GETtheMANUALS.org

NOTES	Only consult these customer complaints after a complete check with the diagnostic tool.

NO DIALOGUE WITH THE COMPUTER	ALP 1
THE SCREEN STAYS BLACK	ALP 2
THE SCREEN DISPLAY STAYS FROZEN	ALP 3
THE SCREEN DISPLAYS CONNECT A DIAGNOSTIC TOOL	ALP 4
NO VOICE MESSAGES	ALP 5
NO TRAFFIC INFORMATION MESSAGE ON THE SCREEN	ALP 6
POOR SATELLITE RECEPTION	ALP 7
THE RADIO DOES NOT SWITCH ON AUTOMATICALLY OR GOES OFF AFTER 20 MINUTES	ALP 8
CLOCK NOT DISPLAYED OR INCORRECT	ALP 9
THE VOLUME DOES NOT INCREASE ACCORDING TO THE VEHICLE SPEED	ALP 10
POOR RADIO RECEPTION	ALP 11
THE CD MULTI-CHANGER DOES NOT WORK	ALP 12
IMPOSSIBLE TO ALTER GPS GUIDANCE WHEN DRIVING	ALP 13

GETtheMANUALS.org

NOTES	Only consult these customer complaints after a complete check with the diagnostic tool.

AFTER UPDATING THE NAVIGATION DVD, THE SYSTEM NO LONGER WORKS — ALP 14

IMPOSSIBLE TO USE TELEPHONE WITH BLUETOOTH — ALP 15

NOT POSSIBLE TO MAKE A CALL FROM THE NUMBERS STORED IN THE LIST OF RECEIVED CALLS — ALP 16

THE CALL IS NOT TRANSFERRED TO THE NAVIGATION AND COMMUNICATION SYSTEM IF A NUMBER IS DIALLED ON THE TELEPHONE — ALP 17

COMMUNICATIONS ARE SUBJECT TO INTERFERENCE IN BLUETOOTH — ALP 18

THE PERSON CALLING USING THE COMMUNICATION SYSTEM CANNOT HEAR ME VERY WELL OR CANNOT HEAR ME AT ALL (WITH BLUETOOTH) — ALP 19

VOICE RECOGNITION IS NOT WORKING — ALP 20

GETtheMANUALS.org

ALP 1	No dialogue with the computer

NOTES	Switch on the + after ignition feed to enter fault finding mode with the computer.

Check the condition and connection of the battery connections.
Check the condition of the fuses.
Check the voltage of the battery.
Repair if necessary.

Try the diagnostic tool on another vehicle.

Check:
– the connection between the diagnostic tool and the diagnostic sensor (wiring in good condition),
– the connection between the diagnostic sensor and the diagnostic socket (wiring in good condition).

Check for **+ 12 V battery feed** on **track 16,+ 12 V after ignition feed** on **track 1** and an **earth** on **track 5** and on **track 4** of the diagnostic socket.
Repair if necessary.

Check for **+ 12 V battery feed** on **track 7**, and an **earth** on **track 8** of the navigation central control.
Repair if necessary.

Disconnect the navigation computer 32-track connector and the navigation central control connector to check for **the insulation, continuity and absence of interference resistance** on the following connections:

32-track navigation computer connector **track 2** → **track 12** of the navigation central control
32-track navigation computer connector **track 18** → **track 6** of the navigation central control
navigation central control **track 5** → **track 13** of the diagnostic socket (CAN H)
navigation central control **track 11** → **track 12** of the diagnostic socket (CAN L)
navigation computer 40-track connector **track 20** → **track 2** of unit fuse F50 (+ battery feed)
navigation computer 40-track connector **track 40** → **earth**

Repair if necessary.

AFTER REPAIR	Carry out a complete check using the diagnostic tool.

GETtheMANUALS.org

ALP 2	The screen stays black

NOTES	Only check the customer complaint after performing a **full check with the diagnostic tool**. Check that the customer is using the navigation system correctly.

Check that the display has not been deactivated Press the **LIGHT** button on the central control for **2 seconds** to reactivate the display.

↓

Check the display power supply. Switch on the ignition, turn on the navigation system and eject the navigation DVD.

Has the DVD been removed?

No →

Check for **+ 12 V** on **track 20** and **earth** on **track 40** of the navigation computer.

Are these tests correct?

Yes →

Contact the Techline.

No →

Check that supply fuse **F50** (20A) is present and in good condition. Replace the fuse if necessary.

Check the **insulation, continuity and the absence of interference resistance** of the connections between the navigation computer and the display (see wiring diagram).

Are these tests correct?

No →

Carry out the necessary repairs.

Yes →

Contact the Techline.

Yes ↓

Check for **+ 12 V** on **track 14** and **earth** on **track 13** of the display.

Are these tests correct?

No →

Check that supply fuse **F50** (20A) is present and in good condition. Replace the fuse if necessary.

Yes ↓

Check **insulation, the continuity and the absence of interference resistance** on the connection between **track 3** of the display connector and **track 21** of the CD multi-changer connector.

↓

– If the connection is correct, replace the display.
– If the connection is faulty, carry out the necessary repairs.

AFTER REPAIR	Carry out a complete check using the diagnostic tool.

GETtheMANUALS.org

ALP 3	Screen display frozen

NOTES	Only check the customer complaint after performing a **full check with the diagnostic tool**. Check that the customer is using the navigation system correctly.

The display on the screen stays frozen. Switch off the ignition and wait until the system shuts down completely (**at least 1 minute).**
Switch on the ignition again.

Has the fault been solved?

No → Carry out a multiplex network test.

Are the tests correct?

Yes → Contact the Techline.

No → Repair the defective connections.

Yes → End of fault finding.
If the fault recurs, contact Techline.

AFTER REPAIR	Carry out a complete check using the diagnostic tool.

GETtheMANUALS.org

ALP 4	The screen displays Connect a diagnostic tool

NOTES	Only consult this customer complaint after a **full check with the diagnostic** tool.

The navigation computer configuration has not been carried out. Carry out the computer configuration (see **86C, Configuration and programming**).

Has the fault disappeared?

No → Carry out a multiplex network test.

Are the tests correct?

Yes → Contact the Techline.

No → Repair the defective connections.

Yes → End of fault finding.

AFTER REPAIR	Carry out a complete check using the diagnostic tool.

GETtheMANUALS.org

ALP 5	No voice messages

NOTES	Only check the customer complaint after performing a **full check with the diagnostic tool**. Check that the customer is using the navigation system correctly.

Check that the sound from the radio is coming through the front and rear speakers.
Otherwise, adjust the sound for all vehicle speakers.

↓

Check that voice guidance is activated. Press the **SET** button and select the **Navigation; Guidance preference; Voice guidance** menus.

Has voice guidance been activated?

No → Activate voice guidance.

Yes

↓

Ensure that the voice guidance volume has been properly adjusted.
Press the **SET** button and select the **Volume and beeps, and Guidance volume** menus.

Has the voice guidance volume been properly adjusted?

No → Adjust the voice guidance volume.

Yes

↓

If the fault is still present, contact the Techline.

AFTER REPAIR	Carry out a complete check using the diagnostic tool.

GETtheMANUALS.org

ALP 6	No traffic information messages on the screen

NOTES	Only consult this customer complaint after a **full check with the diagnostic** tool. Check that the customer is using the navigation system correctly.

TMC road information is disseminated via the FM band on the radio. The **TMC** pictogram should be green in order for the traffic information to be received.

What colour is the TMC pictogram?

Grey → No traffic information is being received.

Green

↓

The system is working but there is no traffic information available.

↓

Check that the traffic information display has been activated.
Press the **INFO** button and select the **TMC traffic information; Traffic information adjustment; Card display** menus.

has the display been activated?

No → Activate the TMC traffic information display.

Yes

↓

Check that the traffic information settings are correct.
Press the **INFO** button and select the **TMC traffic information; Traffic information adjustment; Type of information to be displayed; Traffic information service menus**.

Make any necessary adjustments.

AFTER REPAIR	Carry out a complete check using the diagnostic tool.

GETtheMANUALS.org

ALP 7	Poor satellite reception

NOTES	Only consult this customer complaint after a **full check with the diagnostic** tool. Check that the customer is using the navigation system correctly. Ensure there are no present or stored faults.

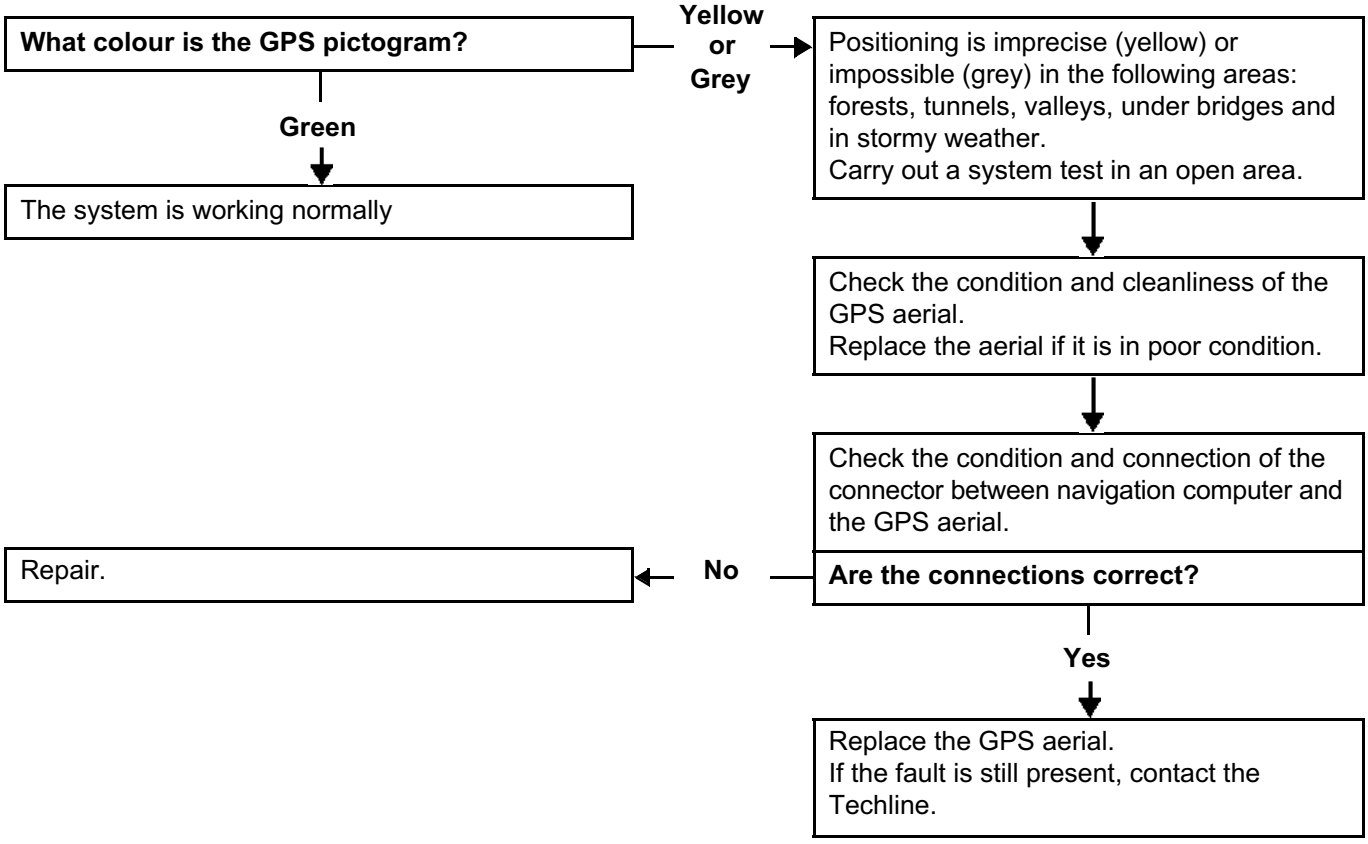

AFTER REPAIR	Carry out a complete check using the diagnostic tool.

GETtheMANUALS.org

ALP 8	The radio does not switch on automatically or switches off after 20 minutes

NOTES	Only consult this customer complaint after a **full check with the diagnostic** tool. Check that the customer is using the navigation system correctly.

The navigation system does not receive the multimedia wake-up signal when the + after ignition feed is switched on.

↓

Check the **insulation, continuity and the absence of interference resistance** on the following connections:

CD changer connector **track 21**
- → **track 14** of the radio C3 connector
- → **track 1** of the central navigation control
- → **track 3** of the display
- → **track 38** of the navigation computer 40-track connector

Repair if necessary.

AFTER REPAIR	Carry out a complete check using the diagnostic tool.

GETtheMANUALS.org

ALP 9	Clock not displayed or incorrect

NOTES	Only consult this customer complaint after a **full check with the diagnostic** tool. Check that the customer is using the navigation system correctly.

Check that the time display is activated and the time zones and settings are correct. Press the **SET** button and select **clock; display clock; time zone differential adjustment; summer time; time zone**.

Are these adjustments correct?

No → Set the display and time.
Explain to the customer how to make these adjustments.

Yes ↓

Drive the vehicle outside into an open area and check that the satellite reception is correct.

Is the GPS pictogram green?

No → See the fault finding chart ALP 7 Poor satellite reception.

Yes ↓

Wait a few minutes in a location with good satellite reception.
If the time is still incorrect, contact Techline.

AFTER REPAIR	Carry out a complete check using the diagnostic tool.

GETtheMANUALS.org

ALP 10	The volume does not increase with an increase in vehicle speed

NOTES	Only consult this customer complaint after a **full check with the diagnostic** tool. Check that the customer is using the navigation system correctly.

Check that volume according to speed function has been activated.
Press the **SET** button and select the **volume correction** menu.

Has the volume according to speed function been activated?

No → Activate this function.

Yes

↓

Check the condition and connection of the navigation computer 32-track connector and the ABS/ESP computer connector.
Repair if necessary.

↓

Check the **insulation, continuity and the absence of interference resistance** on the following connection:
navigation computer 32-track connector **track 4** ⟶ **track 24** ABS / ESP computer connector
Repair if necessary.

AFTER REPAIR	Carry out a complete check using the diagnostic tool.

GETtheMANUALS.org

ALP 11	Poor radio reception

NOTES	Only consult this customer complaint after a **full check with the diagnostic** tool.

Check the condition and connection of connector A and the aerial connector on the radio.
Repair if necessary.

↓

Check the condition and connection of the aerial amplifier connector.
Repair if necessary.

↓

Check the **insulation, continuity and the absence of interference resistance** on the following connection:

radio connector A **track 5** → **single track** of the aerial amplifier
radio aerial connector **track 1** → **track 1** of the aerial amplifier
radio aerial connector **track 2** → **track 2** of the aerial amplifier

Repair if necessary.

↓

If the fault is still present, contact the Techline.

AFTER REPAIR	Carry out a complete check using the diagnostic tool.

GETtheMANUALS.org

ALP 12	The CD changer does not work

NOTES	Only consult this customer complaint after a **full check with the diagnostic** tool. Check that the customer is using the system properly.

Check the connection and condition of the CD multi-changer connector.
Repair if necessary.

↓

Make sure that the **earth** on **track 10** of the multi-changer connector is in perfect condition.

↓

Check for a **+ battery feed** on **track 22**, of the **+ accessories supply** on **track 3** and an **+ after ignition feed** on **track 15** of the CD multi-changer connector.

↓

Check the condition of fuses **F23** (10 A) (+ accessories feed) and **F28** (20A) (+ after ignition feed) on the passenger compartment fuse and relay box.

Are the fuses in good condition? — **No** → Replace the fuses.

Yes

↓

Check the condition of unit fuse **F50** (20 A) (+ battery).
Replace the fuse if necessary.

Is the fuse in good condition? — **No** → Replace the fuse.

Yes

↓

Contact the Techline.

AFTER REPAIR	Carry out a complete check using the diagnostic tool.

GETtheMANUALS.org

ALP 13	Impossible to alter GPS guidance when driving

NOTES	Only consult this customer complaint after a **full check with the diagnostic** tool.

If the configuration **LC002 Country type** is **NETHERLANDS**, it is normal not to be able to adjust the guidance when driving.
This configuration is **IRREVERSIBLE** and it is not possible to clear this choice.

AFTER REPAIR	Carry out a complete check using the diagnostic tool.

GETtheMANUALS.org

ALP 14	After updating the navigation DVD, the system no longer works

NOTES	Only consult this customer complaint after a **full check with the diagnostic** tool.

Check that the navigation computer software version is compatible with the navigation DVD update.

↓

If the navigation DVD is not compatible with the navigation computer software, suggest that the customer buys a navigation DVD in a version compatible with the vehicle's navigation system.

AFTER REPAIR	Carry out a complete check using the diagnostic tool.

GETtheMANUALS.org

ALP 15	Impossible to use the telephone with Bluetooth

NOTES	Only consult this customer complaint after a **full check with the diagnostic** tool. Check that the customer is using the system properly. Check that fault **DF009 Computer** is not present or stored.

Note:
List of telephones researched and approved by Renault in March 2005: Nokia 6820, Nokia 6230, Siemens S65, Motorola V500, Motorola V600.
To see the latest list of telephones approved by Renault as well as the various operations to be carried out on these phones, see **Technical Note 6024A: Special features of mobile phones used with the navigation and communication system**.

Check that Bluetooth mode is activated in the navigation and communication system. Press the **SET** button and select the **telephone; Bluetooth option; Bluetooth connection** menus.

Has the telephone been researched by Renault?

No → Suggest that the customer buy a telephone approved by Renault.

Yes

Check that the telephone software on the telephone is compatible with the vehicle's navigation and communication system.
The telephone software compatible with the navigation and communication system is more advanced than or the same as:
Nokia 6230 and 6820: v 03.15
Motorola V500 and V600: Triplets_G_0B.09.44R
Siemens S65: v 12

- Nokia: *#0000#
- Motorola: select configuration, telephone status then version information
- Siemens: *#06#

Is the telephone software compatible with the vehicle's navigation and communication system?

No → Ask the customer to contact the telephone vendor in order to install a software version into the telephone that would be compatible with the navigation and communication system.

A

GETtheMANUALS.org

ALP 15 (CONTINUED 1)

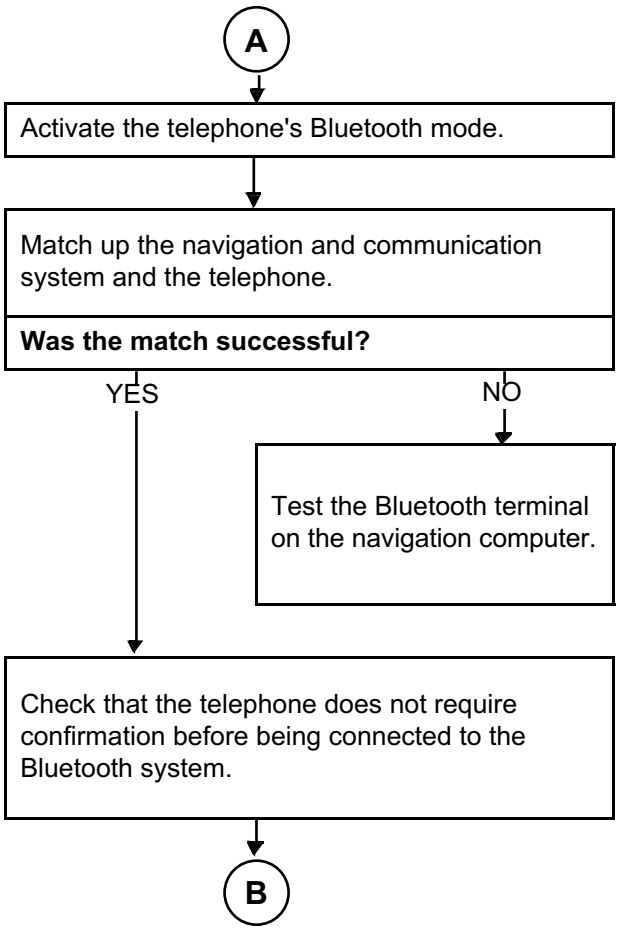

Procedure for activating Bluetooth mode on the telephone:

- Nokia: Select **Parameters, Connectivity, Bluetooth, Activate** in the main menu.
- Motorola: Select **Configuration, Connection, Bluetooth link, Configuration, Supply, Activated** in the main menu.
- Siemens: Select **Adjustments, Mode/Data, Bluetooth**, then activate Bluetooth mode.

Procedure for matching the communication system and the telephone:

On the navigation and communication system:

- Press the **SET** button
- Enter the **telephone** menu.
- Select the **Bluetooth option** line.
- Select the **save a Bluetooth telephone** line.

On the telephone:

- Enter the menu to find a Bluetooth accessory.
- In the list of found accessories, select **My CAR**.
- Enter the PIN code given on the vehicle's navigation display.

AFTER REPAIR	Carry out a complete check using the diagnostic tool.

GETtheMANUALS.org

ALP 15 (CONTINUED 2)

B

If so, reply that you want to connect then inhibit this function on the telephone (not possible on Siemens phones).

Check that the telephone is at the top of the matched phones list (icon opposite its name).

Is it first?

NO → Put the telephone at the top of the list of telephones matched to the navigation and communication system.

Try to match another telephone to the vehicle's navigation and communication system.

Was the match successful?

NO → If the fault has not been solved, contact Techline.

YES

The customer's telephone is definitely the reason why it does not work with the navigation and communication system.

AFTER REPAIR	Carry out a complete check using the diagnostic tool.

GETtheMANUALS.org

ALP 16	Not possible to make a call from the numbers stored in the list of received calls.

NOTES	Only consult this customer complaint after a **full check with the diagnostic** tool. Check that the customer is using the system properly.

This fault occurs with Nokia phones and cannot be repaired.

AFTER REPAIR	Carry out a complete check using the diagnostic tool.

GETtheMANUALS.org

ALP 17	The call is not transferred to the navigation and communication system if a number is dialled on the telephone

NOTES	Only consult this customer complaint after a **full check with the diagnostic** tool. Check that the customer is using the system properly.

This fault occurs with Siemens phones and cannot be repaired.
In this case, dial the numbers using the navigation central control.

AFTER REPAIR	Carry out a complete check using the diagnostic tool.

GETtheMANUALS.org

ALP 18	Communication is subject to interference with Bluetooth

NOTES	Only consult this customer complaint after a **full check with the diagnostic** tool. Check that the customer is using the system properly. Check that the telephone network availability is sufficient to make a call. To see the latest list of telephones approved by Renault as well as the various operations to be carried out on these phones, see **Technical Note 6024A: Special features of mobile phones used with the navigation and communication system**.

Make a call to a fixed line.

Is the interference still present?

No → The fault is linked to the number the customer is calling or to a localised lack of network availability.

Yes

- Deactivate Bluetooth mode on the telephone.
- Deactivate Bluetooth mode in the navigation and communication system.

Press the **SET** button and select the **telephone; Bluetooth option; Bluetooth connection** menus.
Make a call to a fixed line.

Procedure for activating Bluetooth mode on the telephone:

- Nokia: Select **Parameters, Connectivity, Bluetooth, Deactivate** in the main menu.
- Motorola: Select **Configuration, Connection, Bluetooth link, Configuration, Supply, Deactivated** in the main menu.
- Siemens: Select **Adjustments, Mode/Data, Bluetooth**, then deactivate Bluetooth mode.

Is the interference still present?

No → The fault is linked to the customer's telephone.
Ask the customer to carry out a fault finding procedure on the telephone with the vendor.

Yes

Switch off the radio if it is on.

Is the interference still present?

No → Run fault finding on the radio.
Replace the radio if necessary.

Yes

(A)

GETtheMANUALS.org

ALP 18 (CONTINUED)

(A)

Place the telephone close to the navigation computer.

If the fault is still present, check the condition and connection of the connectors on the navigation computer and the radio.

Is the interference still present?

No → End of fault finding.

Yes

Match up another telephone and make a call.

Is the interference still present?

Yes

If the fault is still present, contact the Techline.

No

Fault solved, end of fault finding.

Procedure for matching the communication system and the telephone:

On the navigation and communication system:
- Press the **SET** button.
- Enter the **telephone** menu.
- Select the **Bluetooth option** line.
- Select the **save a Bluetooth telephone** line.

On the telephone:
- Enter the menu to find a Bluetooth accessory.
- In the list of found accessories, select **My CAR**.
- Enter the PIN code given on the vehicle's navigation display.

AFTER REPAIR	Carry out a complete check using the diagnostic tool.

GETtheMANUALS.org

ALP 19	The person calling using the communication system cannot hear me very well or cannot hear me at all (with Bluetooth)

NOTES	Only consult this customer complaint after a **full check with the diagnostic** tool. Check that the customer is using the system properly. Check that the telephone network availability is sufficient to make a call. Idem ALP18 To see the latest list of telephones approved by Renault as well as the various operations to be carried out on these phones, see **Technical Note 6024A: Special features of mobile phones used with the navigation and communication system**.

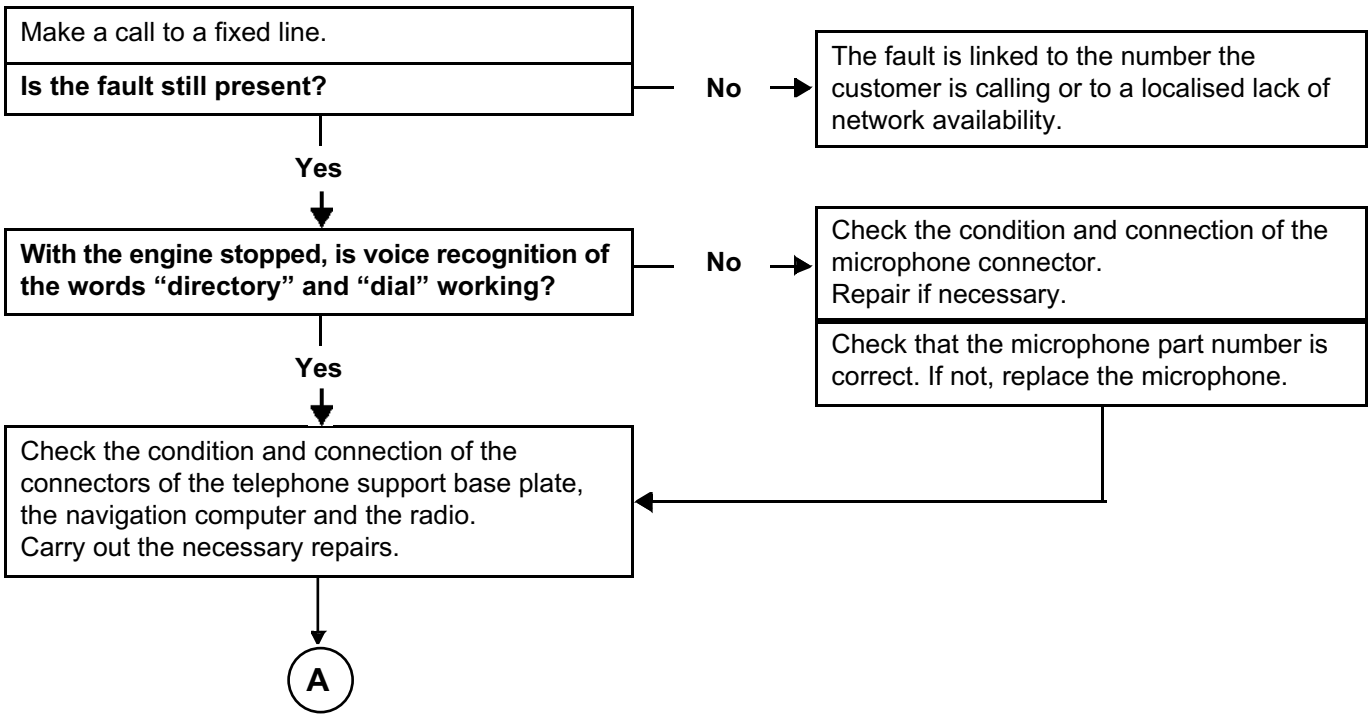

AFTER REPAIR	Carry out a complete check using the diagnostic tool.

GETtheMANUALS.org

ALP 19 (CONTINUED)	

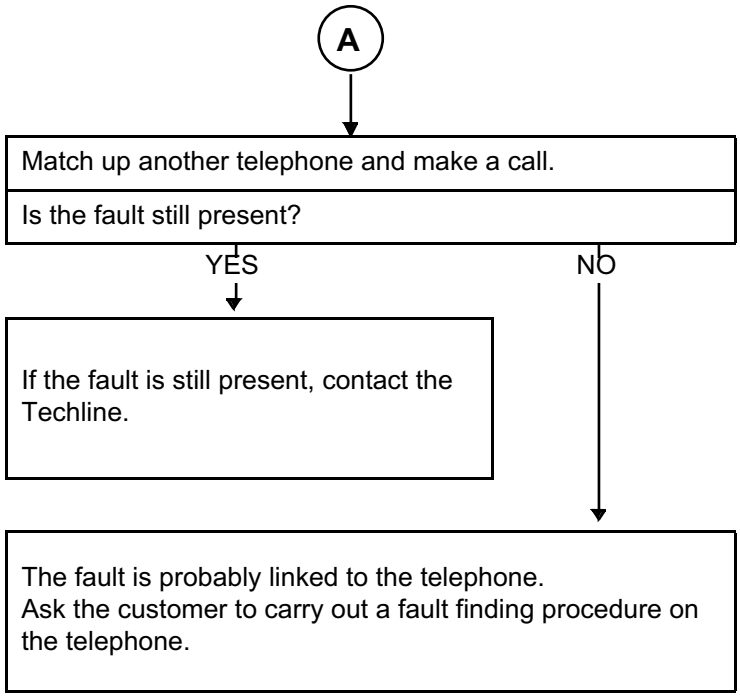

Procedure for matching the communication system and the telephone:

On the navigation and communication system:
- Press the **SET** button
- Enter the **Telephone** menu.
- Select the **Bluetooth option** line.
- Select the **Save a Bluetooth telephone** line.

On the telephone:
- Go into the menu to find a Bluetooth accessory.
- In the list of found accessories, select **My CAR**
- Enter the PIN code given on the vehicle's navigation display.

AFTER REPAIR	Carry out a complete check using the diagnostic tool.

GETtheMANUALS.org

ALP 20	Voice recognition is not working

NOTES	Only consult this customer complaint after a **full check with the diagnostic** tool. Check that the customer is using the system properly.

With the engine stopped, then at 30 mph (50 km/h) does voice recognition of the words Directory and Dial work?

No →

Check the condition and connection of the microphone connector.
Repair if necessary.

Check that the microphone part number is correct. If not, replace the microphone.

Yes ↓

The customer needs to use voice recognition intensively for 2 weeks so that the voice recognition system can learn to recognise his voice.

↓

If the fault is still present, contact the Techline.

AFTER REPAIR	Carry out a complete check using the diagnostic tool.

GETtheMANUALS.org

VEL SATIS

8 Electrical equipment

86C MULTIMEDIA SYSTEM

Video system	86C - 1
Infrared remote control	86C - 4
Video controls	86C - 6
Video screen	86C - 8
Anti-theft code	86C - 9
Self-test procedure	86C - 10
Customer complaints	86C - 11
Fault finding chart	86C - 12

FEBRUARY 2006 **EDITION ANGLAISE**

"The repair procedures given by the manufacturer in this document are based on the technical specifications current when it was prepared.

The methods may be modified as a result of changes introduced by the manufacturer in the production of the various component units and accessories from which his vehicles are constructed."

All rights reserved by Renault s.a.s.

Copying or translating, in part or in full, of this document or use of the service part reference numbering system is forbidden without the prior written authority of Renault s.a.s.

© Renault s.a.s. 2006

GETtheMANUALS.org

.**GENERAL INFORMATION**

The video system for the rear seats consists of:
– a DVD player located under the rear seat cushion,
– a video control (A) behind the rear face of the console with an on/off button as well as headset and accessory sockets,
– a screen attached to a fold-out motor,
– a **top of the range** radio,
– an infrared remote control for the controls.

The video system can play DVDs, audio CDs, or take input from accessories (game consoles, video cameras etc.).

Diagram

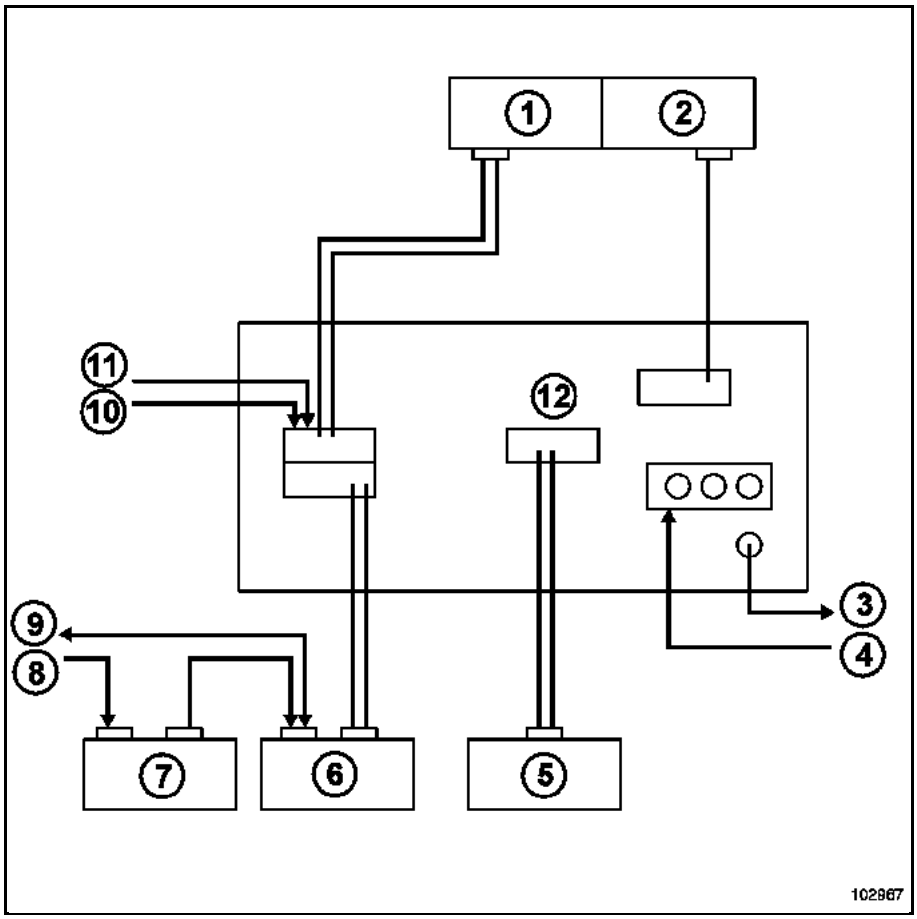

1 Retractable case
2 Screen
3 Headset socket
4 Accessories input
5 DVD player
6 Tuner-amplifier
7 CD changer
8 + battery feed,
9 Vehicle signal (+ accessories, + after ignition feed)
10 + battery feed
11 Vehicle signal (+ accessories, + after ignition feed)
12 Video controls

GETtheMANUALS.org

For repairs, the system has an integrated self-test procedure menu, see **self-test procedure**. Never try to repair a system component. Malfunctioning components must be replaced.

GETtheMANUALS.org

OPERATION

The battery voltage must be between **11** and **15 V** for the system to operate correctly. Outside of this voltage range, it will only function for a limited time or not at all.

In high temperatures, its operation is impaired or impossible.

For the system to work, the card must be in the **+ accessories** position. Press the on/off button on the video or remote control to fold out the screen.

Once the power to the **+ accessories** system is cut off, the screen automatically retracts after a few seconds.

The system is protected by a four digit code. This code can be changed; see **Anti-theft code**. After the power is cut off, the code must be entered each time.

The system has a self-test procedure.

MENU

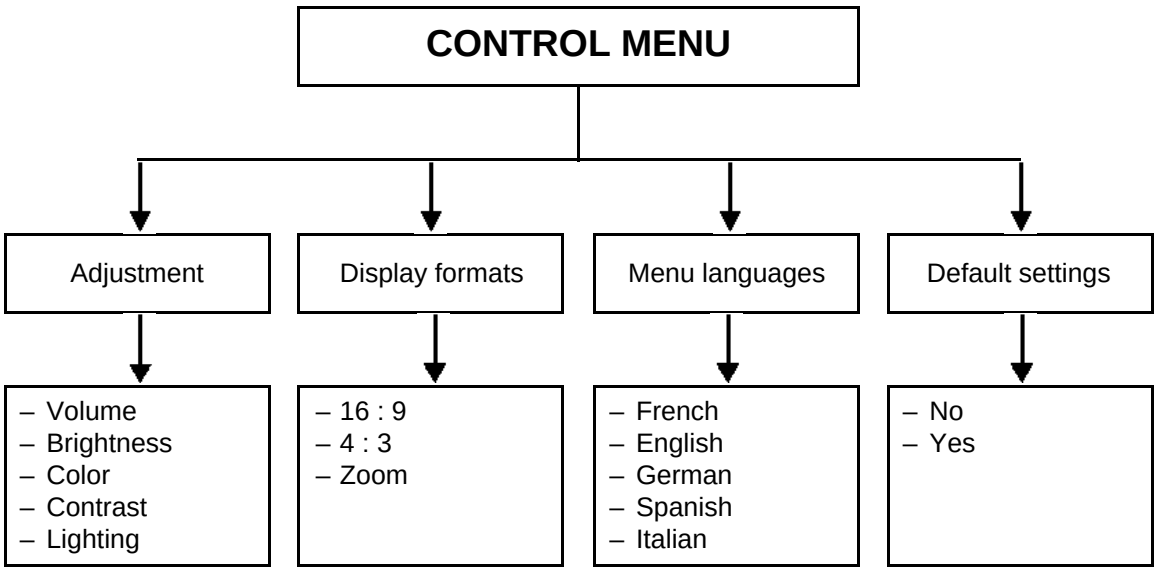

GETtheMANUALS.org

DESCRIPTION OF THE REMOTE CONTROL:

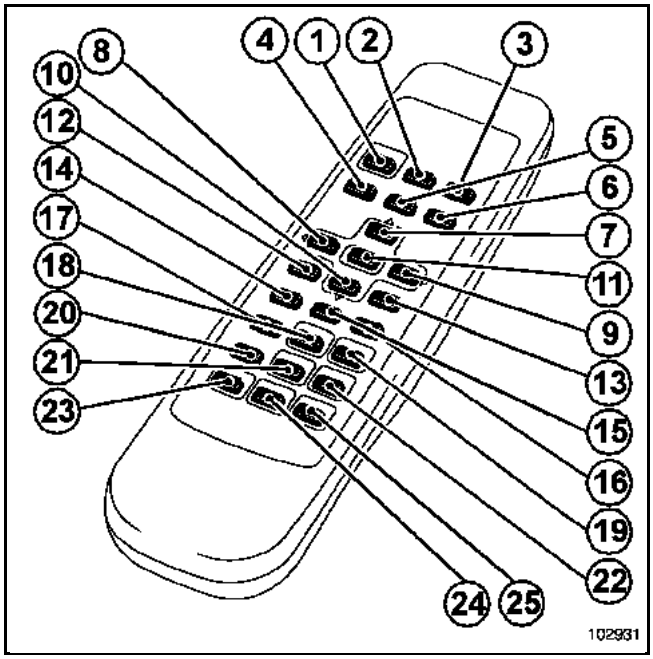

1 System on/off
2 Screen tilt control
3 Screen on and off
4 Access to control configuration menus
5 Video input selection
6 Access to video system menus
7 Menu navigation control
8 Menu navigation control
9 Menu navigation control
10 Menu navigation control
11 Confirm key
12 Image format and zoom selector
13 Numeric keypad access
14 DVD soundtrack language selection
15 Control to adjust volume, brightness, contrast, etc.
16 Control to adjust volume, brightness, contrast, etc.
17 DVD subtitles language selection
18 Fast rewind
19 Fast forward
20 DVD camera angle selection
21 Skip to previous segment
22 Skip to next segment
23 Stop player
24 Freeze frame
25 Normal DVD or audio CD play

The remote control is not coded, so is interchangeable with another vehicle (Espace).

To operate the system with the remote control, point it at one of the infrared sensors on the controls or on the CD changer on the front of the dashboard.

Some functions such as subtitling, camera angle, zoom or language are not accessible. They depend on the DVD menu.

GETtheMANUALS.org

CONNECTION

14-track connector (to video control)

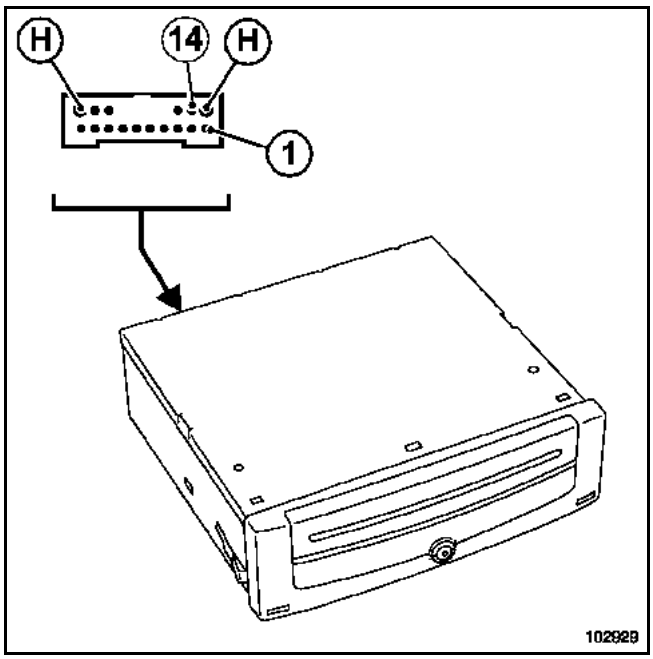

The system's resistance can be controlled:
– resistance of Y signal: **75 Ω** between connections 34CP and 34CQ,
– resistance of C signal: **75 Ω** between connections 34CS and 34CT,
– resistance of audio outputs: **100 kΩ** between connections 34CK and 34CL then between connections 34CM and 34CN.

See Technical Note Wiring Diagrams, Velsatis, code 1280.

Note:
The 2 big clips on the connectors are guides (H).

GETtheMANUALS.org

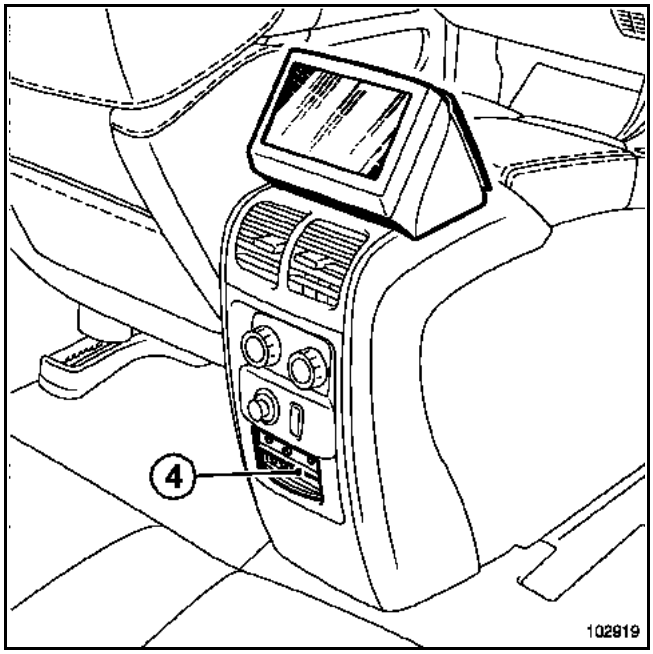

The video control (**4**) is the only part of the system which is protected by a code (see **Anti-theft code**).

The controls have a self-test mode (see **Self-test procedure**).

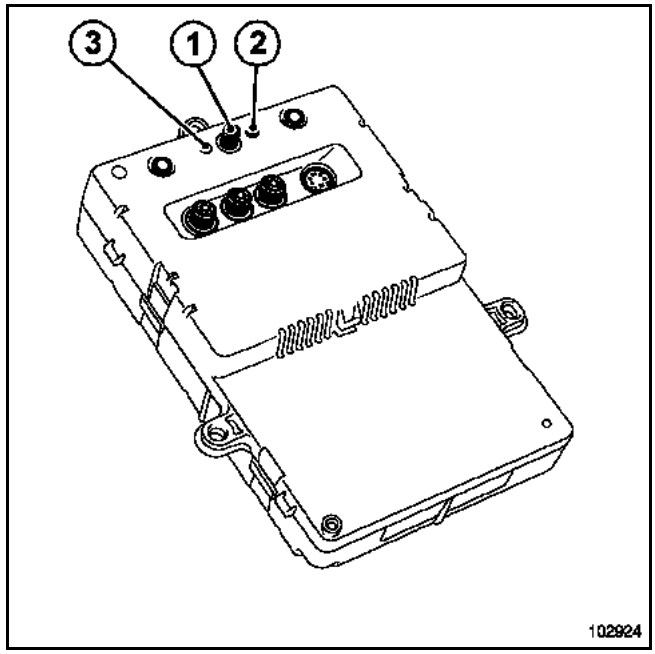

The controls consist of:
– an on/off switch (**1**),
– the operation indicator light (**2**),
– an infrared receiver (**3**),
– two headset sockets (right and left),
– audio and video accessory inputs.

GETtheMANUALS.org

CONNECTION

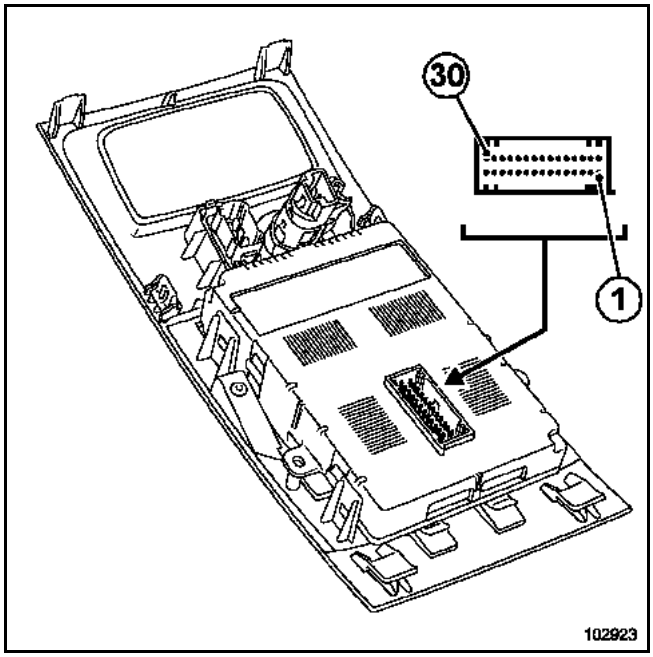

See Technical Note Wiring Diagrams, Velsatis, code 1273.

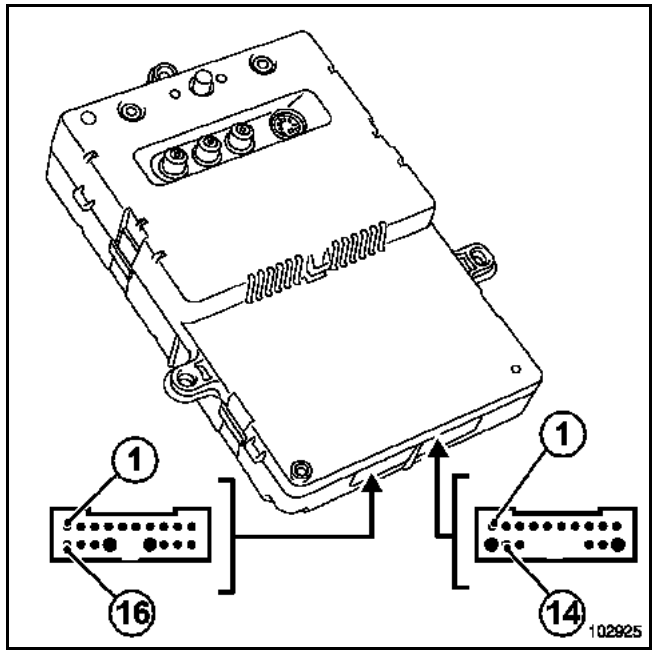

Screen on/off control
– off: **0 V**
– on: **12 V**

The brightness output should be between **0** and **5 V**.

GETtheMANUALS.org

CONNECTION

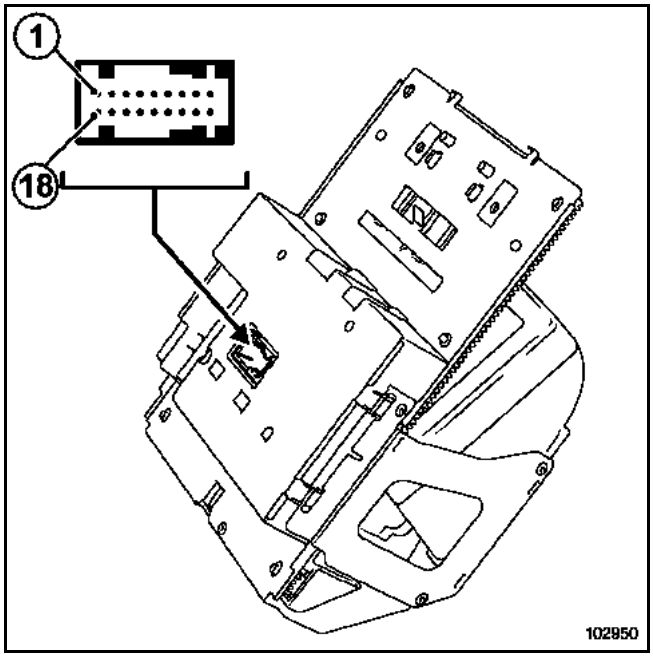

See Technical Note Wiring Diagrams, Velsatis, code 1303.

GETtheMANUALS.org

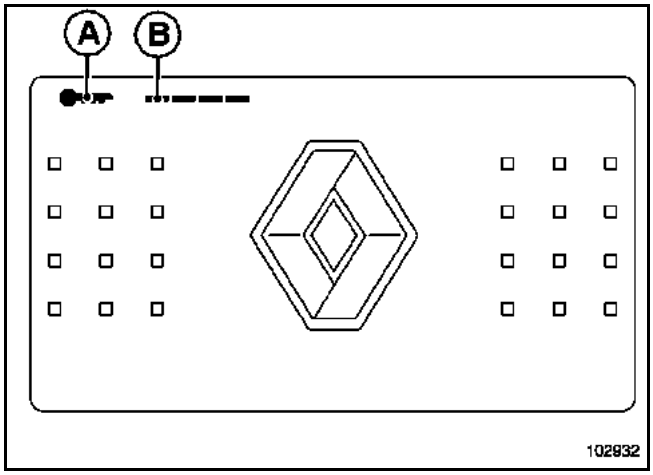

A Lock indicator key:
– White key: system locked after power cut off. Enter anti-theft code.
– Red key: system locked after five failed attempts to enter code. Perform unlocking procedure.
B Numeric keypad to enter code (for dashes, press **Shift** on the remote control).

Procedure for entering the anti-theft code

– Turn on the control unit (screen folds out and displays RENAULT logo and white key) (**A**)).

– Press **Shift** on the remote control to display the dashes (**B**).

– Enter the four digit code then confirm.

Note:
The system locks after 5 failed attempts to enter the code.

Unlocking procedure:

– Turn on the control unit. The logo and red key (**A**) appear,

– press **Shift** on the remote control. The dashes (**B**) appear on the screen,

– enter 6401 (which is the code for all the video controls),

– the control generates a four-digit code (numerical), if the code only has 2 digits, add two 0 digits (e.g.: 24 → 0024),

– go to the server of the VIN code and the code generated by the video control. In the Return video control code menu, enter the VIN and the code. The server will give the unlocking code,

– press Shift on the remote control. The dashes (**B**) appear on the screen,

– enter the unlocking code,

– the control displays New Code, enter a new code (for example, the radio code to prevent several codes being used), enter the code twice,

– the video control is unlocked and operational (key no longer displayed).

GETtheMANUALS.org

SELF-TEST PROCEDURE

Press **Shift** 6 times to access the numeric keypad.

The code for launching the test is **1046**.

Fault finding messages now start displaying on the screen, or the indicator light flashes:

– **1 flash** of the indicator light and message **1** Running self-test procedure is displayed.

– **2 flashes** of the indicator light and message **2** Controls out of order is displayed.

– **3 flashes** of the indicator light and message **3** DVD player out of order is displayed.

– **4 flashes** of the indicator light and message **4** Retractable unit out of order is displayed.

– **5 flashes** of the indicator light and message **5** Self-test procedure completed is displayed.

– **6 flashes** of the indicator light and message **6** No fault is displayed.

Note:
Each time a button on the remote control is pressed, the indicator light on the control unit should flash.

GETtheMANUALS.org

NO SOUND FROM RADIO SPEAKERS	ALP 1
VOLUME INCREASES SUDDENLY	ALP 2
NO IMAGE (BLACK SCREEN) - OR SCREEN FROZEN ON WELCOME PAGE	ALP 3
NO IMAGE CHANGE WHEN LIGHTS SWITCHED ON	ALP 4
SCREEN DOES NOT FOLD OUT	ALP 5
REMOTE CONTROL DOES NOT WORK	ALP 6

IMPORTANT
The faults may often be bugs in the video system software. For example, frozen image, faulty display or sound etc. This type of fault can often be fixed simply by disconnecting the video system and reconnecting a few seconds later (with the controls connector or battery).
Carry out this operation before checking the wiring harness and before replacing a system component.
Similarly, rule out any disk faults: damaged disk, unrecognized format (the player cannot read MP3 or DIV X files, non-Region 2 DVDs, or some burned discs). To make sure it is a system fault, try another disk before any removal or fault finding procedure.

GETtheMANUALS.org

ALP 1	No sound from radio speakers

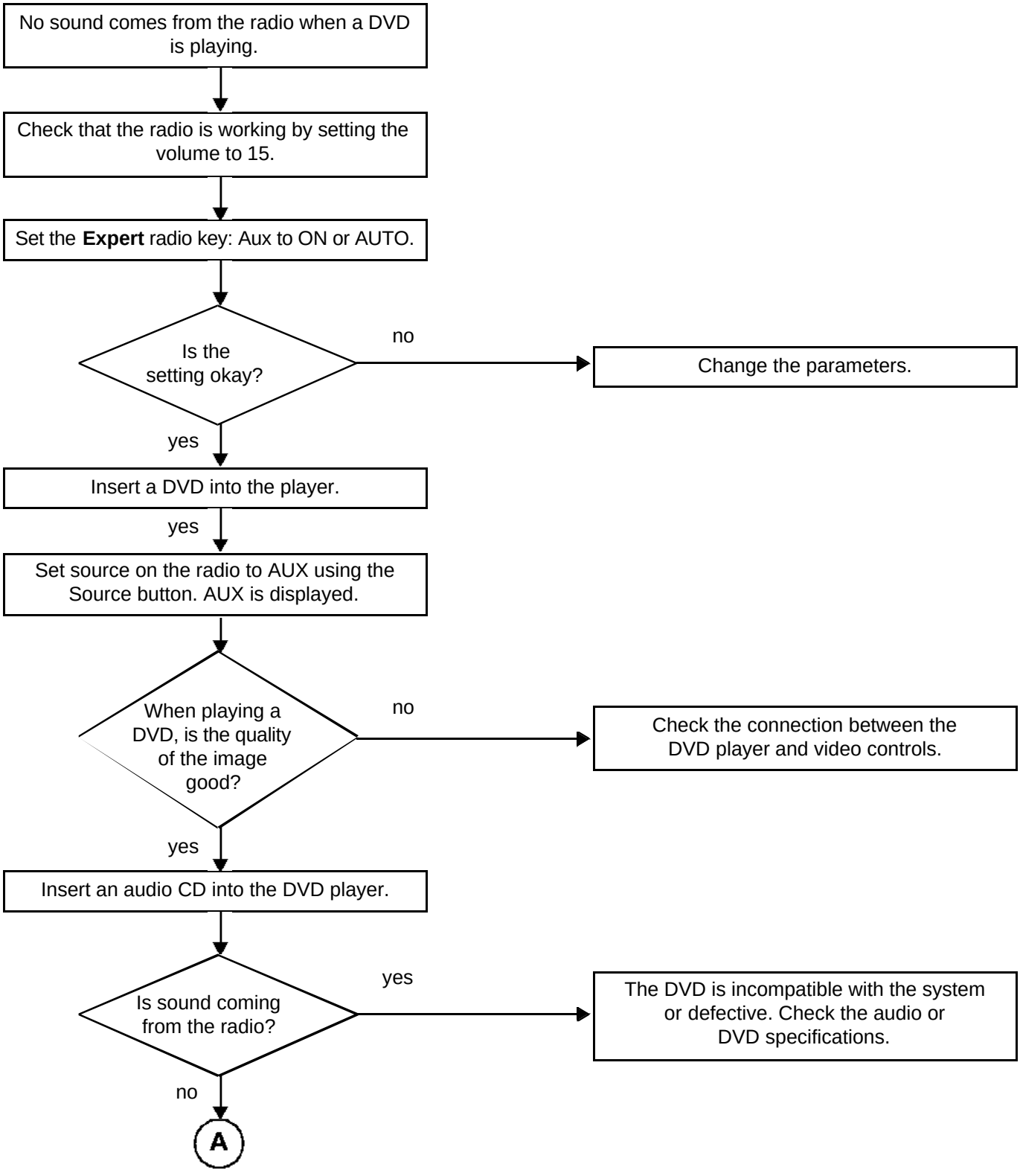

GETtheMANUALS.org

ALP 1 CONTINUED

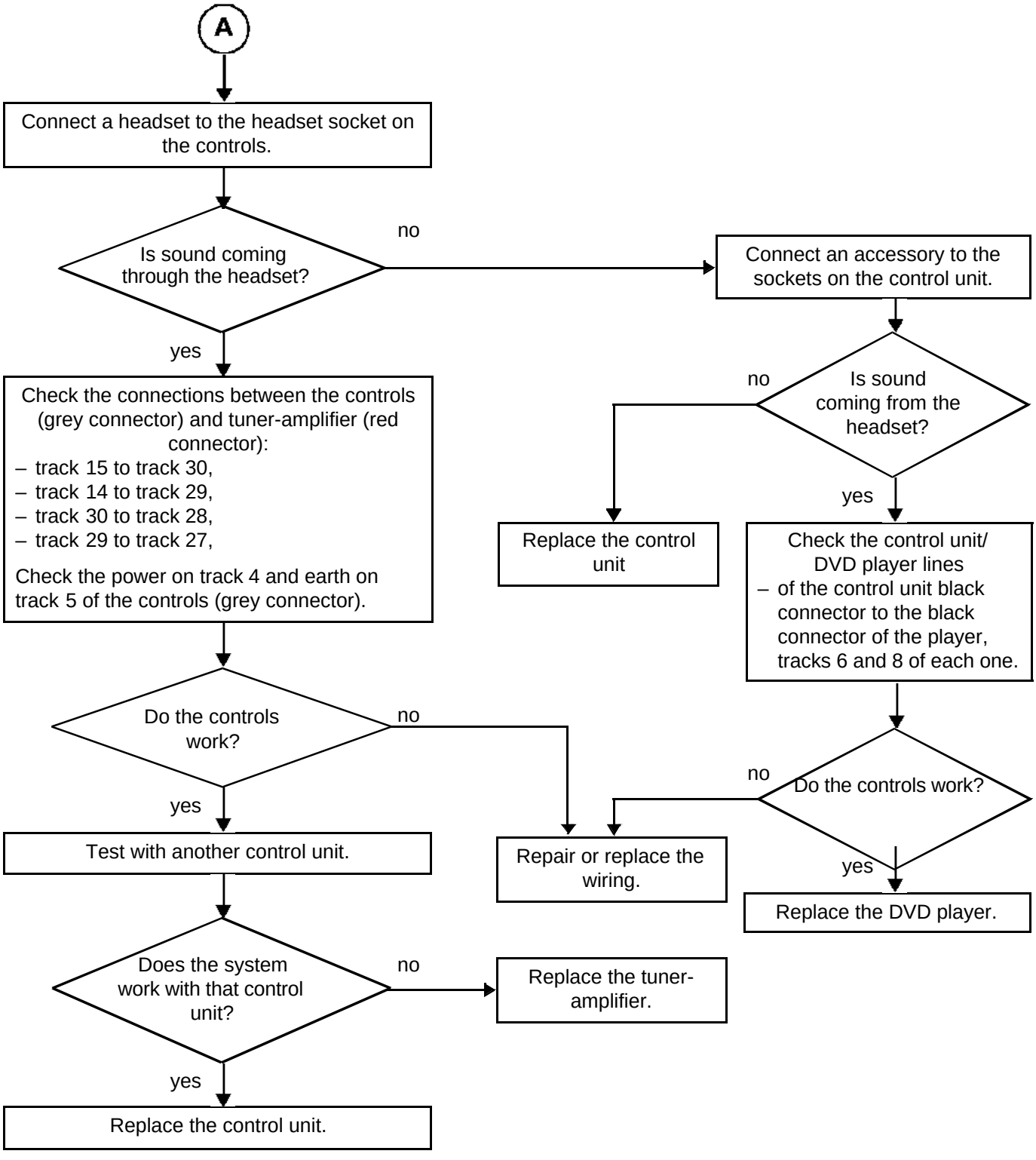

GETtheMANUALS.org

ALP 2	The volume increases suddenly

The sound increases suddenly or with the vehicle's speed

↓

Check the radio settings

↓

The settings can be adjusted after a long press on the **Expert** button on the front of the CD changer

↓

Select **Speed**, volume adjustment in accordance with speed

↓

Select the desired speed curve:
– SPEED 0: no adjustment
– SPEED 5: maximum adjustment.

↓

Confirm with the **Expert** button

GETtheMANUALS.org

ALP 3	No image (black screen - blue screen - or screen frozen on welcome page)

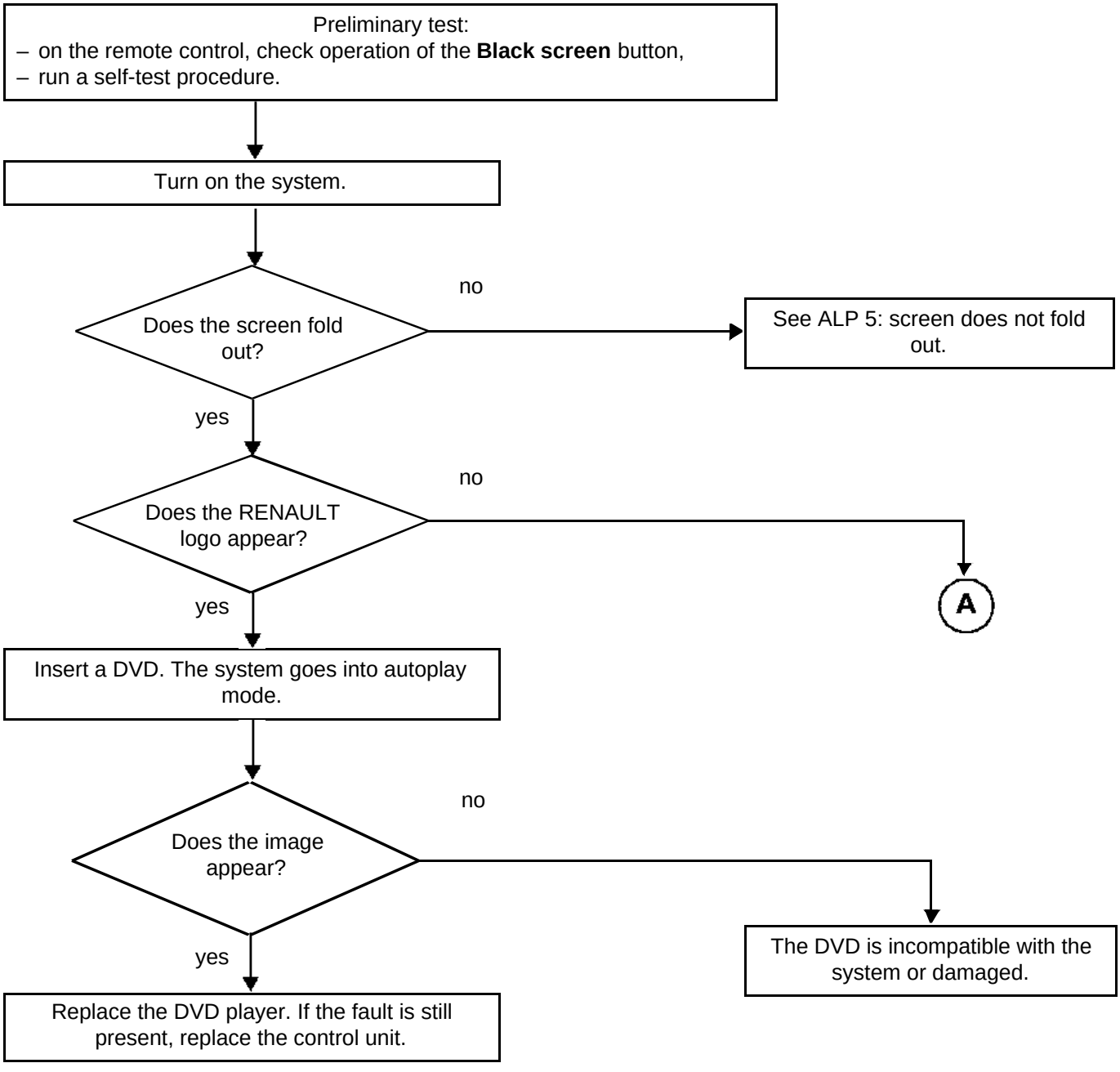

GETtheMANUALS.org

ALP 3 CONTINUED

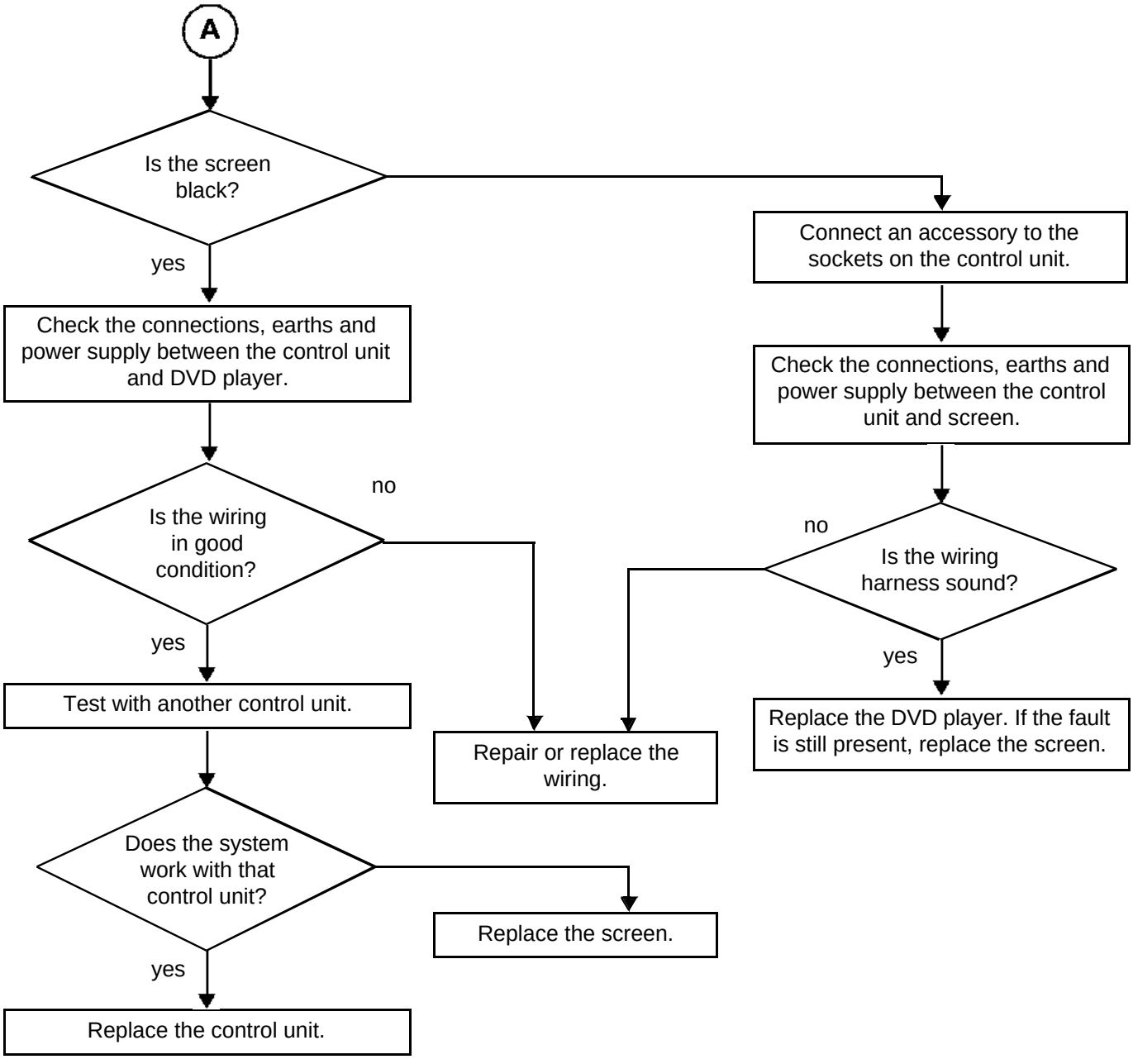

GETtheMANUALS.org

ALP 4	No image change when lights switched on

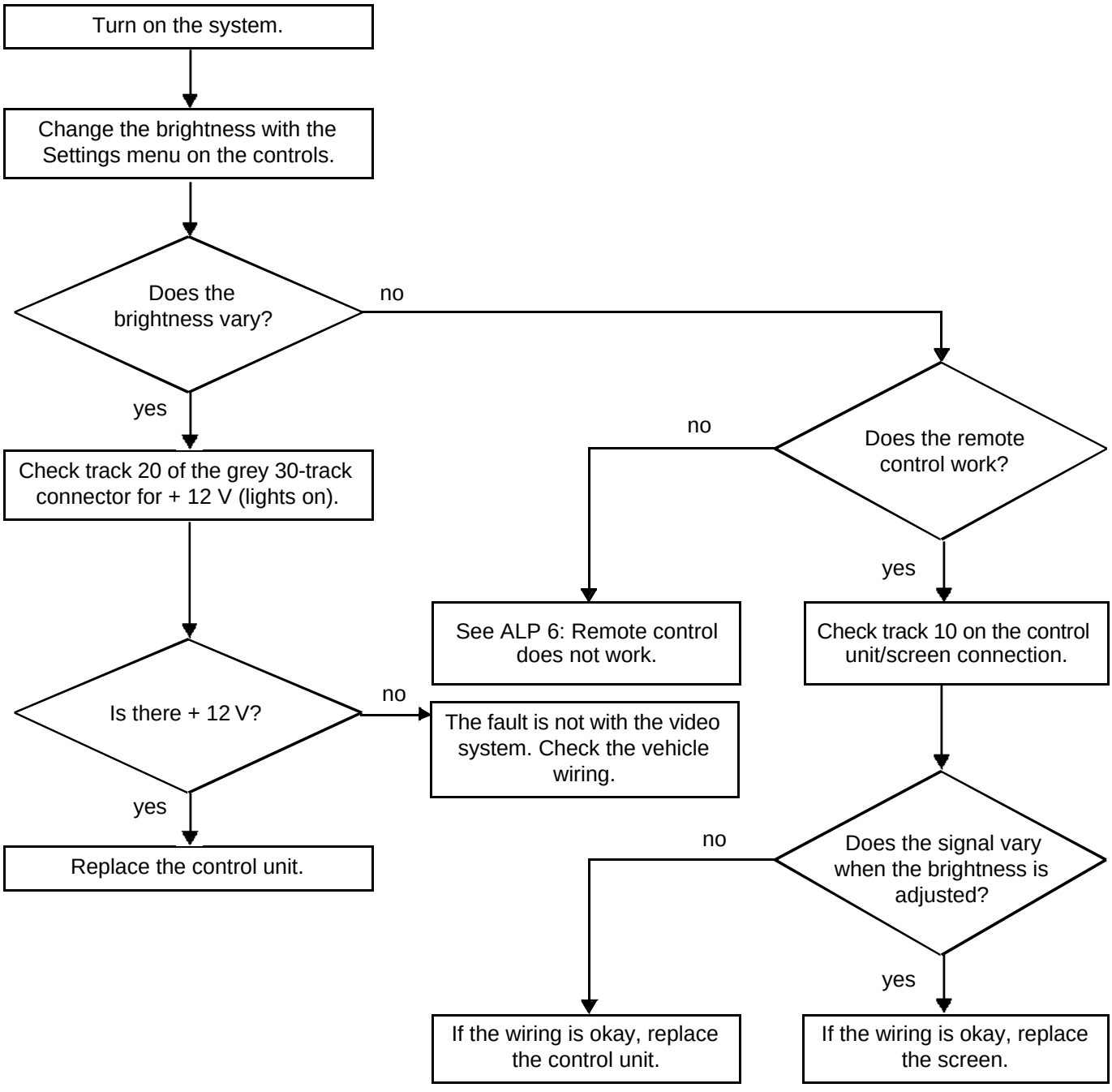

GETtheMANUALS.org

ALP 5	Screen does not fold out

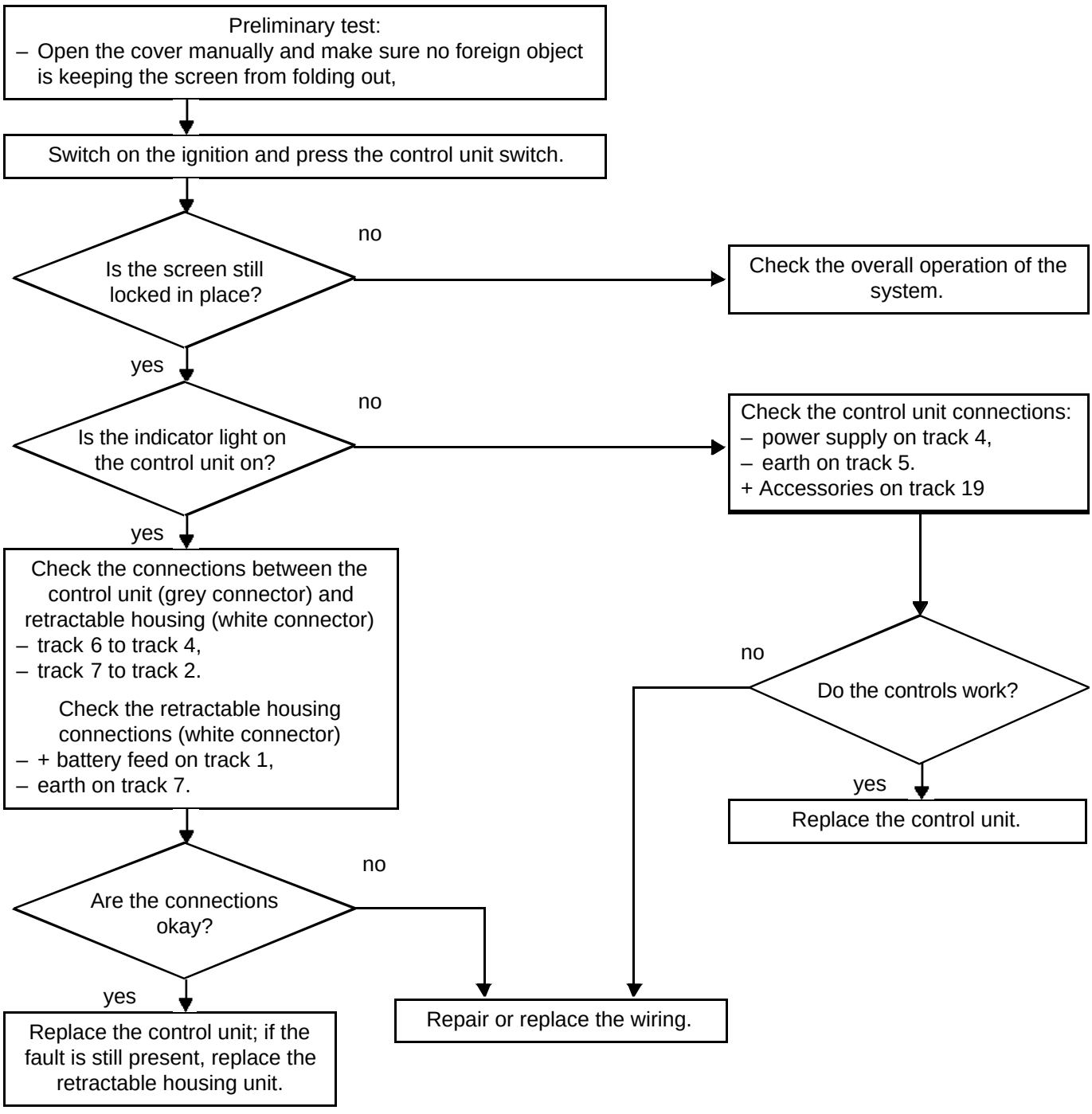

GETtheMANUALS.org

ALP 6	The video system remote control does not work (occasionally or not at all)

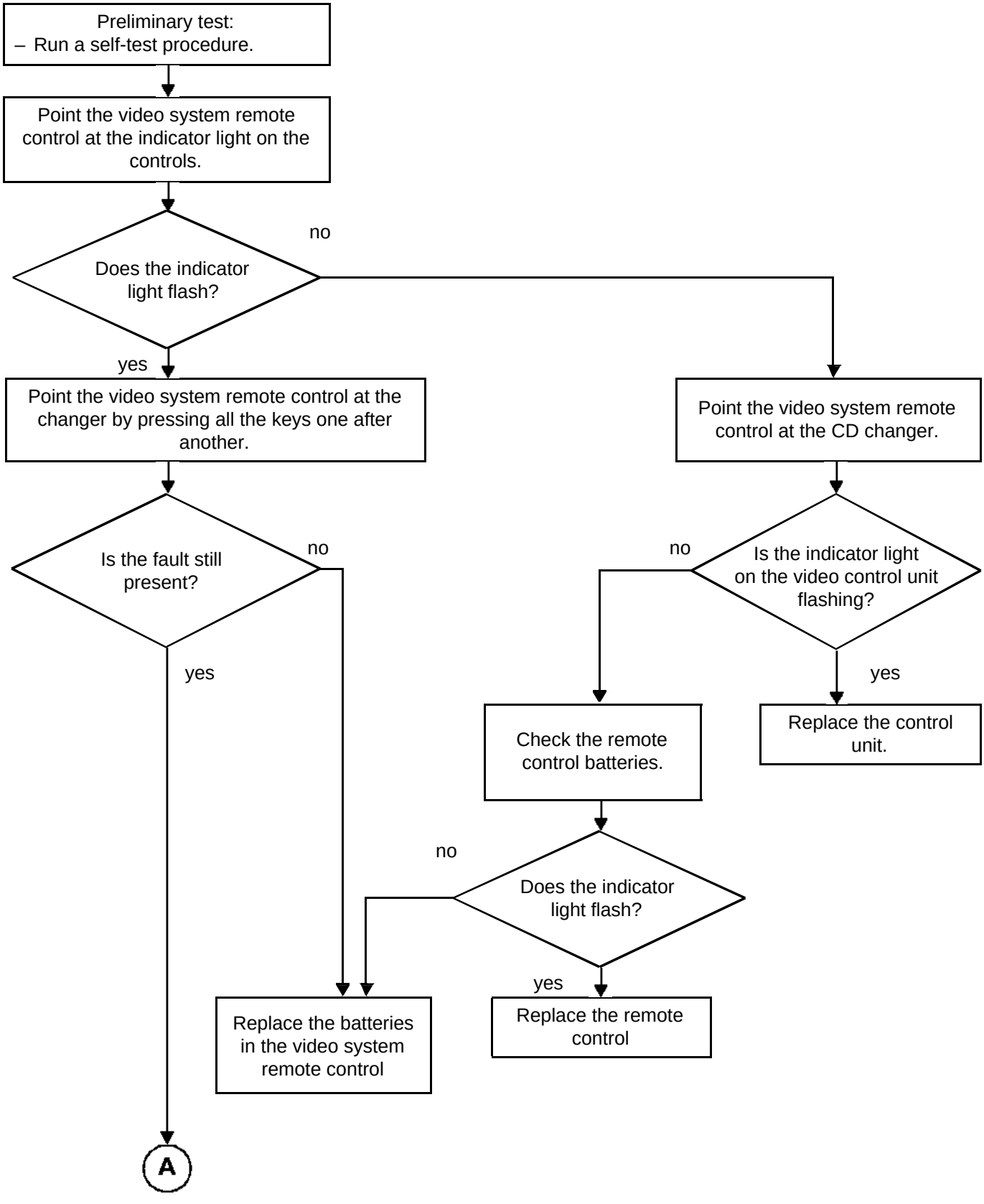

GETtheMANUALS.org

ALP 6 CONTINUED

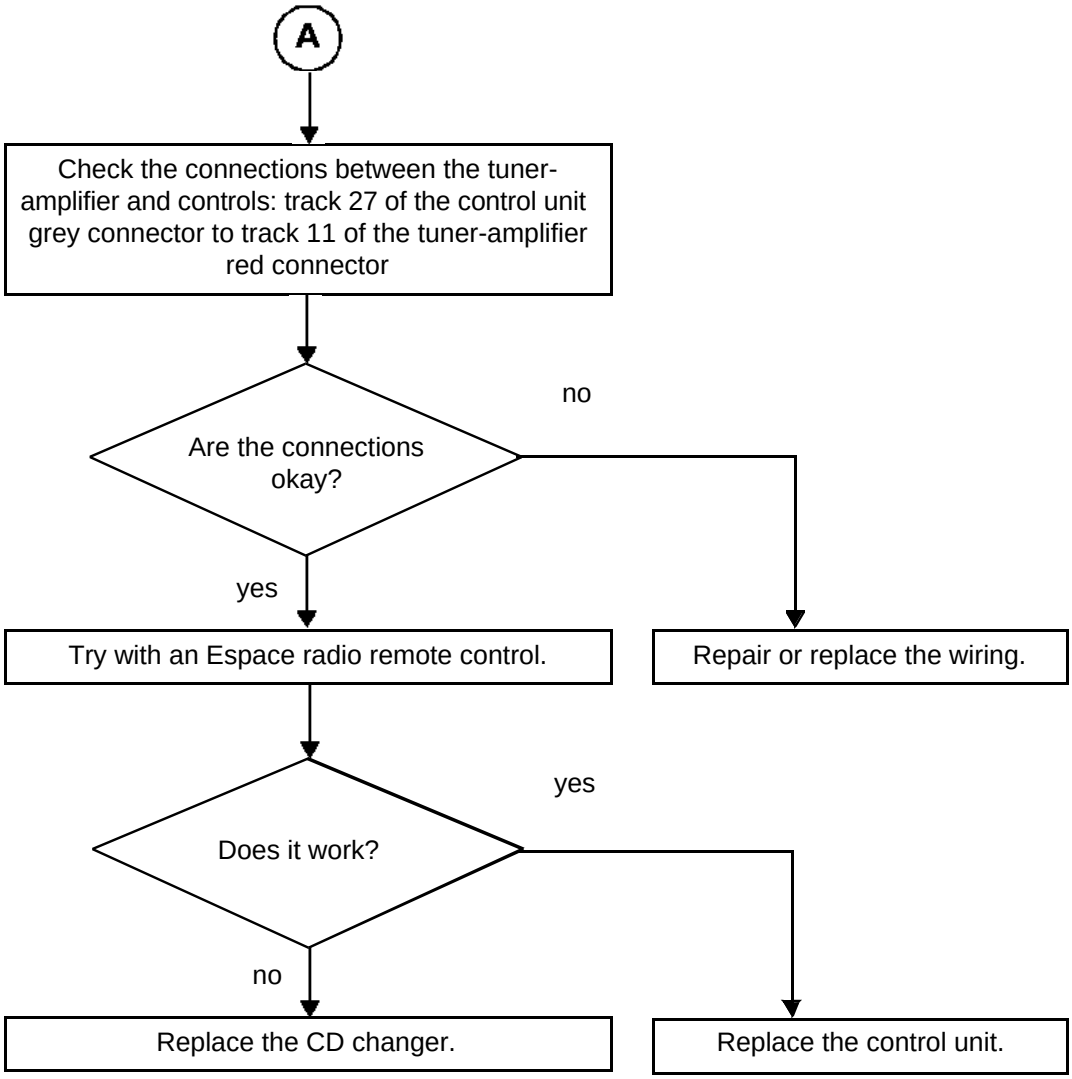

GETtheMANUALS.org

VEL SATIS

8 Electrical equipment

87B PASSENGER COMPARTMENT CONNECTION UNIT

UCH
Program No.: 031
Vdiag No.: 14, 15

Fault finding – Introduction	87B - 2
Fault finding – System operation	87B - 7
Fault finding – Replacement of components	87B - 20
Fault finding – Configurations and programming	87B - 23
Fault finding – Fault summary table	87B - 36
Fault finding – Interpretation of faults	87B - 39
Fault finding – Conformity check	87B - 101
Fault finding – Status summary table	87B - 129
Fault finding – Interpretation of statuses	87B - 132
Fault finding – Parameter summary table	87B - 163
Fault finding – Interpretation of parameters	87B - 164
Fault finding – Command summary table	87B - 166
Fault finding – Dealing with command modes	87B - 167
Fault finding – Customer complaints	87B - 180
Fault finding – Fault finding charts	87B - 181

V5 **Edition Anglaise**

"The repair procedures given by the manufacturer in this document are based on the technical specifications current when it was prepared.

The procedures may be modified as a result of changes introduced by the manufacturer in the production of the various component units and accessories from which his vehicles are constructed."

All rights reserved by Renault s.a.s.

Copying or translating, in part or in full, of this document or use of the service part reference numbering system is forbidden without the prior written authority of Renault s.a.s.

© Renault s.a.s. 2009

GETtheMANUALS.org

1. SCOPE OF THIS DOCUMENT

This document presents the fault finding procedure applicable to all computers with the following specifications:

Vehicle(s): **Vel-Satis Phase 2** *Function concerned:* **UCH**	*Name of computer:* **UCH** *Program no.:* **0031** *Vdiag No.:* **14, 15**

2. PREREQUISITES FOR FAULT FINDING

Documentation type

Fault finding procedures (this manual):
– Assisted fault finding (integrated into the diagnostic tool), Dialogys.
Wiring Diagrams:
– Visu-Schéma (CD-ROM), paper.

Type of diagnostic tools

– **CLIP**

Special tooling required

Special tooling required	
	Multimeter
Elé. 1681	Universal bornier
Valve exciter part no.: MS-1607 (if this tool is available in your workshop)	

3. RECAP

Procedure

In order to save energy, the Vel-Satis Phase 2 UCH cuts off the + after ignition feed after 3 minutes.

To perform fault finding on a computer, it is possible to force the + after ignition feed for 1 hour by applying the following procedure:
– Press the card unlocking button,
– insert the card in the reader,
– press the Start button (interrupting the timed + after ignition feed mode),
– press and hold the Start button for over 5 seconds until the engine immobiliser warning light starts to flash rapidly (4 Hz).

This forced + after ignition feed mode remains active for 1 hour.
Pressing the Start button or removing the card from the reader cuts off the forced + after ignition feed but does not cut off the timed forced + after ignition feed mode. As long as one hour has not elapsed the + after ignition feed function restarts the forced + after ignition feed for the remaining time.

GETtheMANUALS.org

Faults

Faults are declared as either present or stored (depending on whether they appeared in a certain context and have disappeared since, or whether they remain present but have not been diagnosed within the current context).

The **present** or **stored** status of faults should be taken into consideration when the diagnostic tool is switched on after the + after ignition feed (without any system components being active).

For a **present fault**, apply the procedure described in the **Interpretation of faults** section.

For a **stored fault**, note the faults displayed and apply the instructions in the **Notes** section.

If the fault is **confirmed** when the instructions in the Notes section are applied, the fault is present. Deal with the fault

If the fault is **not confirmed**, check:
- the electrical lines which correspond to the fault,
- the connectors for these lines (for oxidation, bent pins, etc.),
- the resistance of the component detected as faulty,
- the condition of the wires (melted or split insulation, wear).

Conformity check

The aim of the conformity check is to check data that does not produce a fault on the diagnostic tool because the data is inconsistent. Therefore, this stage is used to:
- carry out fault finding on faults that do not have a fault display, and which may correspond to a customer complaint.
- check that the system is operating correctly and that there is no risk of a fault recurring after repairs.

This section gives the fault finding procedures for statuses and parameters and the conditions for checking them.

If a status is not behaving normally or a parameter is outside the permitted tolerance values, consult the corresponding fault finding page.

Customer complaints - Fault finding chart

If the test with the diagnostic tool is OK but the customer complaint is still present, the fault should be processed by **customer complaint**.

A synopsis of the general procedure to follow is provided on the following page in the form of a flow chart.

GETtheMANUALS.org

4. FAULT FINDING PROCEDURE

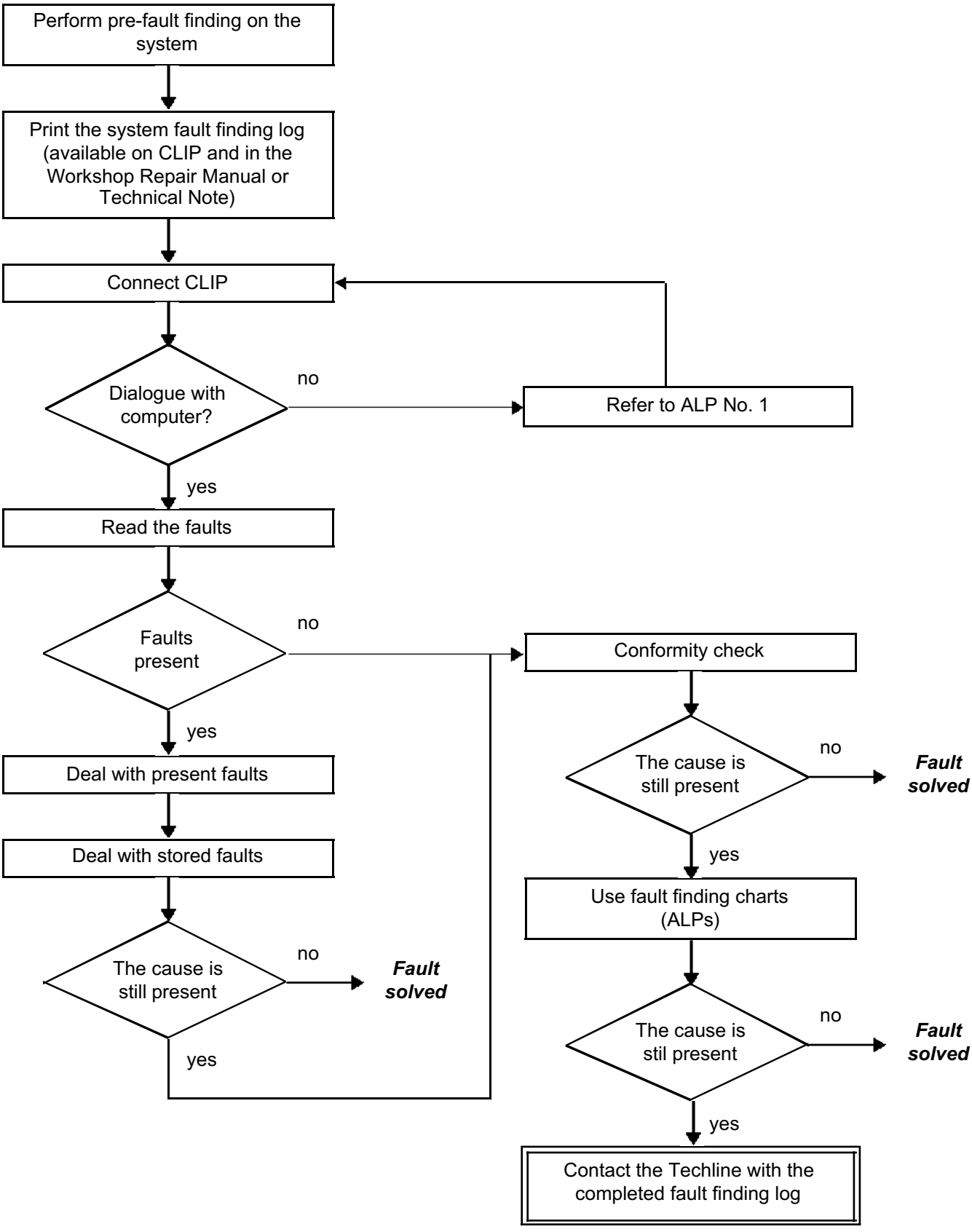

GETtheMANUALS.org

4. FAULT FINDING PROCEDURE (continued)

Wiring check

Fault finding problems
Disconnecting the connectors and/or manipulating the wiring harness may temporarily remove the cause of a fault.
Electrical measurements of voltage, resistance and insulation are generally correct, especially if the fault is not present when the analysis is made (stored fault).

Visual inspection
Look for damage under the bonnet and in the passenger compartment.
Carefully check the fuses, insulators and wiring harness routing.
Look for signs of oxidation.

Tactile inspection
While manipulating the wiring harness, use the diagnostic tool to note any change in fault status from stored to present.
Make sure that the connectors are properly locked.
Apply light pressure to the connectors.
Twist the wiring harness.
If there is a change in status, try to locate the source of the fault.

Inspection of each component
Disconnect the connectors and check the appearance of the clips and tabs, as well as the crimping (no crimping on the insulating section).
Make sure that the clips and tabs are properly locked in the sockets.
Check that no clips or tabs have been dislodged during connection.
Check the clip contact pressure using an appropriate model of tab.

Resistance check
Check the continuity of entire lines, then section by section.
Look for a short circuit to earth, to **+ 12 V** or to another wire.

If a fault is detected, repair or replace the wiring harness.

GETtheMANUALS.org

5. FAULT FINDING LOG

IMPORTANT

IMPORTANT
Any fault on a complex system requires thorough fault finding with the appropriate tools. The FAULT FINDING LOG, which should be completed during the procedure, enables you to keep track of the procedure which is carried out. It is an essential document when consulting the manufacturer.

IT IS THEREFORE MANDATORY TO FILL IN A FAULT FINDING LOG EVERY TIME IT IS REQUESTED BY TECHLINE OR THE WARRANTY RETURN SERVICE.

You will always be asked for this log:

- when requesting technical assistance from Techline,
- for approval requests when replacing parts for which approval is mandatory,
- to be attached to monitored parts for which reimbursement is requested. The log is needed for warranty reimbursement, and enables better analysis of the parts removed.

6. SAFETY ADVICE

Safety rules must be observed during any work on a component to prevent any damage or injury:

- check the battery voltage to avoid incorrect operation of computer functions,
- use the proper tools.

GETtheMANUALS.org

IMMOBILISER FUNCTION:

This concerns an engine immobiliser system that recognises a RENAULT card with a random rolling code (V3 encryption).
There is no longer a security code but a repair code allocated to the vehicle for life during manufacture:

– there are no numbers on the RENAULT Card,
– at the time of delivery, the vehicle does not have a label showing the code.
When working on the system, the repair code number can be requested from the local assistance network.

When requesting the code number, it is essential to provide the vehicle identification number as well as its production number. This enables the operator to identify the vehicle in order to provide the correct code.
RENAULT Cards are fitted with a backup key (1) enabling the door to be opened in the event of an operating fault.
Replacement RENAULT Cards are supplied non-coded and without an emergency metal insert.
A green cover is fitted in the place of the backup key.
When replacing a RENAULT Card, it is necessary to replace the green cover with the customer's backup key and to fit the green cover on the faulty RENAULT Card when returning it for analysis.

Note:
A backup key can be ordered from the Parts Department by quoting the vehicle security number.
This system can have up to four RENAULT Cards.
The remote control function and the battery have no effect on the immobiliser.
The **Basic** and **Hands-Free** RENAULT Cards are different and not interchangeable.
They cannot be used on a vehicle not set up for them.
In the event of a card being stolen or lost or upon the customer's request, a RENAULT Card can be de-allocated from a vehicle. It can be reallocated to the same vehicle if necessary.

Indicator light table:

Warning light illumination	Instrument panel message	Ignition on	Possible cause
Flashing	**Apply brakes + Start or declutch**	**No**	**Immobiliser on (no card recognised by reader)**
Flashing	**Reader out of order or card not detected**	**No**	**Unknown card in reader. The card does not correspond to the vehicle or has been de-allocated.**
Flashing	**Steering not locked or card not recognised**	**No**	**Faulty electric steering column lock or multiplex connection.**
Permanently on	**Faulty injection -** Faulty engine immobiliser	**Yes**	**The electric steering column lock is unlocked.** There is a fault with the vehicle injection system.
On permanently (3 seconds) then off		**Yes**	**Starting the engine**

GETtheMANUALS.org

KEYLESS VEHICLE

This function is divided into three sub-functions: Access, Protection and Starting
The **Vel-Satis Ph2** keyless system is taken from the **Espace IV**.
It has the following changes:

– hands-free opening and starting (with card detection including the tailgate),
– improved control of the access and locking zone around the vehicle,
– remote activation of lights (remote lighting).

Two options are available on the new Vel-Satis:

	Access function (locking/unlocking)	**Starting function**
Scenario 1	Pressing the card buttons	Insertion of the card in the reader, pressing the Start/Stop button. Automatic transmission conditions: – in P or N. Manual gearbox conditions: – neutral or clutch fully depressed.
Scenario 2 (hands-free)	Unlocking by gripping the handle with card close to the vehicle. Unlocking while walking away: Feedback of information by two flashes of the lights and sounding of audible warning. Manual locking/unlocking remains possible as in scenario 1. However, this action inhibits hands-free mode until the ignition is switched on again.	As the card is in the starting zone (passenger compartment, including luggage compartment), press on the Start-Stop button. Automatic transmission conditions: – in P or N + brake pedal depressed. Manual gearbox conditions: – neutral + brake pedal depressed or clutch fully depressed.

GETtheMANUALS.org

Table showing the way in which presses on the card are managed and their associated actions:

Press on the Renault card		Effect on locks	Operation of direction indicators	Operation of side mounted indicators	Operation of horn
Closing	1 short press	Central door locking	2 flashes	2 flashes	-
	2 short presses	Deadlocking of opening elements	Rapid flashing	Rapid flashing	-
	1 long press****	Closing of the windows and sunroof*	2 flashes	Rapid flashing	-
	Hands-free mode	Central door locking	2 flashes	Continuously lit for approximately 10 seconds	1 signal (configurable)
Opening	1 short press	Unlocking of the doors and luggage compartment or the driver's door**	1 flash	1 flash	-
	2 short presses	Unlocking of the doors and luggage compartment***	-	-	-
	Hands-free mode	Unlocking of the doors and luggage compartment or the driver's door**	1 flash	1 flash	-

*: for this function, the vehicle must be fitted with one-touch electric windows and anti-pinch sunroof.
**: some right-hand drive vehicles may be fitted with "Driver's door only" unlocking. This function allows the driver's door and luggage compartment only to be unlocked by pressing the Renault card briefly.
***: unlocking of doors and tailgate for vehicles fitted with "Driver's door only" unlocking.
****: on some right-hand drive versions, this function is preceded by deadlocking.

GETtheMANUALS.org

The **VSC1 keyless vehicle** system:

The system consists of:

A Renault card.
A radio frequency receiver integrated into the card reader.
An electronic controller integrated into the UCH.
An engine start push-button.
The door locks.
A red "Door locked" indicator light.
The vehicle direction indicators.
The injection computer.
The clutch pedal sensors and gearbox neutral position sensors.
The electric steering column lock.

Basic system operation

When the immobiliser system is operational, the engine immobiliser red indicator light flashes (slow flashing: once per second).
The electric steering column lock is locked.
The immobiliser is activated a few seconds after the ignition is switched off.
Once the RENAULT **Card** is inserted into the **reader, its code** is sent to the **UCH.**
If the **code is recognised** by the **UCH**, it sends a coded signal to the **electric steering column** lock via the multiplex network.
If the **coded signal** received by the electric lock is identical to the one it has in its memory, the lock releases the steering column and sends a confirmation message to the UCH.
When the **UCH** receives this message, it applies the **+ APC** and switches off the engine immobiliser red warning light.
When the ignition is on, the UCH and the injection computer send coded signals to each other via the multiplex network.
If the signals transmitted by the **UCH** and the **injection computer match, the UCH authorises the engine to start** and the injection is unlocked.

Special cases
If the injection computer or electric steering column lock has no reference code in its memory:
the code sent to it is stored in the memory.
If the codes do not match, the system remains locked.
The red immobiliser warning light flashes (rapidly) or is continuously lit.
Refer to the indicator light table.

IMPORTANT
When the vehicle battery has a low charge, the drop in voltage caused by operating the starter could reactivate the immobiliser.
If the voltage is too low, the engine cannot be started, even by pushing the vehicle.

GETtheMANUALS.org

The **VSC2 keyless vehicle** system:

The system consists of:

Access aerials:
Two or three aerials are necessary for the hands-free access function:
– An access aerial bonded into the headlining.
– A reception aerial incorporated into the card reader.
The starting aerials:
These four aerials determine the area which the card must be in to authorise starting:
– A central internal aerial (located behind the central console) (resistance: **3.8 Ω ± 0.6 Ω**).
– A front internal aerial located under the dashboard console (resistance: **2.3 Ω ± 0.4 Ω**).
– An instrument panel aerial (located behind the instrument panel, attached to the beam) (resistance of instrument panel + rear internal aerial resistance: **8 Ω ± 1 Ω**).
– A rear internal aerial (located behind the bench seat).

Two hands-free Renault cards (the system can include up to four cards).
A card reader.
An immobiliser warning light.
An electronic controller integrated into the UCH.
An engine start push-button.
An injection computer.
An airbag computer.
An anti-lock braking system computer.
A clutch pedal sensor and gearbox neutral position sensor.
A brake pedal sensor.
An electric steering column lock.
Presence sensors for each door handle.
A red "Door locked" indicator light.
The vehicle direction indicators.
The specific door locks for the deadlocking function.
An audible warning.

Starting procedure:

1st situation: starting conditions not fulfilled:
An initial press of the Start button establishes the level of accessories power supply (the presence of the card in the starting zone is not essential).
A second press activates the starting aerials and the card reading operation. If the card is recognised, the steering column is unlocked and the ignition is switched on (delay 3 minutes).

2nd situation: starting conditions fulfilled:
A single press on the Start button activates all the above-mentioned steps up to starting the engine.

GETtheMANUALS.org

Hands-free system operation

When the immobiliser system is operational, the engine immobiliser red indicator light flashes (slow flashing: once per second).
The electric steering column lock is locked.
When the Start button is pressed, the vehicle interrogates the RENAULT Card via the **125 kHz** aerial.
The RENAULT Card responds under a frequency of **433 MHz or 315 MHz** (depending on country).
The RENAULT Card code is received by the card reader and sent to the UCH.

WARNING
"Hands-free" starting of the vehicle can be deactivated by configuring the UCH.
In this case, starting the vehicle is the same as for the basic system.
If the code is recognised by the UCH, it sends a coded signal to the electric steering column lock via the multiplex network.
If the coded signal received by the electric lock is identical to the one it has in its memory, the lock releases the steering column and sends a confirmation message to the UCH.
When the UCH receives this message, it applies the + after ignition feed and switches off the engine immobiliser warning light.
When the ignition is on, the UCH and the injection computer send coded signals to each other via the multiplex network.
If the signals transmitted by the UCH and the injection computer match, the UCH authorises the engine to start and the injection is unlocked.

Note:
The Hands-Free RENAULT Card operates with a battery.
If the battery does not work, the RENAULT Card can be inserted in the reader.
The vehicle operates like a vehicle without Hands-Free.

GETtheMANUALS.org

VARIABLE POWER ASSISTED STEERING FUNCTION (variable PAS)
The computer that performs the variable power assisted steering function is the UCH.
Power supply: + APC with engine running.

Operation:
The variable power-assisted steering system (DAV) is designed to provide greater power assistance during parking manoeuvres than that provided by constant power-assisted steering (DAC), and to gradually reduce this power assistance as the vehicle speed increases. It also gives much firmer steering than DAC at high speed.

The DAV function controls the stepper motor according to the speed of the vehicle.

Hardware:

The DAV system consists of:
Hydraulics:
– A constant flow hydraulic pump.
– A hydraulic jack.
– A valve controlled by an electromechanical actuator.
– An oil reservoir.
– A pipe assembly (hydraulic connections, cooler).

Electrics:
– A source of electrical power.
– An integrated function in the UCH.
– Three vehicle status signals.
– An actuator.
– The diagnostic connection.
– The connection between the different electrical components (wiring).
– The vehicle signals: speed.

GETtheMANUALS.org

WIPING FUNCTION

The front and rear screen wiper functions must be disabled when the UCH is blank (unprogrammed). On the other hand, the diagnostic actuator commands are always possible.
The wiper motor (a serial motor) has a built-in electronic controller. This motor is driven by the UCH using a serial connection. The rain sensor, if it is fitted, communicates with the UCH and the motor via this serial connection.

Operation of opposite direction wipers with serial connection rain sensor:
When the + APC is activated, the UCH drives a two-way serial line via which it sends the various commands. The UCH reads the signals sent by the motor and the rain sensor.
The motor's electronics are supplied directly by the 12 V battery. The wiper commands (stop, automatic, low speed, high speed) are given by the UCH.
Position of the stalk in automatic mode:
When the combined wash/wipe stalk is in the auto position as the + APC is activated, the rain sensor is disabled. The rain sensor is activated on detection of a transmission of the automatic intermittent speed input or following a screen wash request (short or long press) with the wash/wipe stalk in automatic position. In this case, the sensor controls the motor directly using different speed requests depending on the type of rain.

Defect mode in the event of a faulty sensor:
In the event of line failure (no dialogue), on activation (start-up or auto using the control), the UCH will operate the windscreen wiper in permanent intermittent mode with a 5 second interval for the auto position of the wash/wipe stalk. In the event of line failure (no dialogue) during operation, the windscreen wiper control will retain the status of the last sensor command. This part of the defect mode is controlled by the internal electronics of the opposite direction wiper motor.

Note: The rain sensor is optional, it may or may not be present.

GETtheMANUALS.org

LIGHTING FUNCTION

The lighting system can be broken down into three functions:
– Direction indicators and hazard warning lights.
– Sidelights, dipped beam headlights, main beam headlights and fog lights.
– Interior lighting.

Direction indicators and hazard warning lights
Direction indicators:
The unit should instruct the left-hand or right-hand direction indicator to flash depending on the order sent by the stalk.
The buzzer integrated into the instrument panel is used to replace the indicator relay.
When the vehicle is locked using the card, the UCH must power the left- and right-hand direction indicators twice for 400 ms. However, this functionality is not activated in the following cases:
– If a door is found to be open.
– If a fault in the power supply to the electric door locking motors or in the connection is detected.

Defect mode: this is requested if one of the front or rear bulbs is faulty. Defect mode is not requested if one of the bulbs of the side-mounted repeaters is defective, as it is not possible to detect this fault.

Hazard warning lights:
The control unit must make all the right- and left-hand direction indicators flash according to the command sent by the hazard warning light control (whatever the position of the direction indicator stalk), the deceleration signal sent by the ABS computer (during emergency braking) or the signal sent by the airbag computer (in the event of impact).

Sidelights, dipped beam headlights, main beam headlights and fog lights
These functions are supplied according to the position of the lighting stalk.

Automatic headlighting (sidelights and dipped beam)
The automatic headlighting function is exclusive with the running light function (activation of lights in daytime).
This function consists of automatically activating the sidelights and dipped beam headlights. The UCH receives the request from the rain/light sensor.
Switch-off request by the sensor: if the fog lights and dipped beam headlights are not being used, they are switched off at the request of the rain/light sensor.

> Note:
> The automatic headlighting function is operational as soon as the engine is detected as running.

Operation in defect mode: if the side lights and the dipped beam headlights have been activated at the request of the sensor, failure of the latter causes the light activation command to be maintained until the engine is switched off. If the failure occurs when the main beam headlights are on, the side lights and dipped beam headlights will also be maintained until the engine is switched off.

Running lights function (activation of lights in daytime)
When the lighting stalk is in the park position, with + APC on, detection that the engine is running causes activation of the side lights and dipped beam headlights. The lights are turned off when the engine stops.

Fog light ring
Operation of the fog light ring is independent of the positions of the lighting stalk and lighting ring. The UCH receives the front and rear fog pulse inputs when there is a + 12 V supply.

GETtheMANUALS.org

TYRE FUNCTION (TYRE PRESSURE MONITOR):

This system continuously monitors the pressure status of all four tyres, indicates the tyre pressure when the ignition is switched on to within **0.1 bar** (depending on version), and warns the driver when:
– the pressure is **0.3 bar** below the recommended pressure (orange warning) or **0.6 bar** below (red warning),
– the pressure is too high,
– a tyre is leaking excessively,
– a tyre is faulty,
– there is a pressure difference between the left-hand and right-hand wheels.

Composition of the system:
The **tyre pressure monitor** consists of the following components:
– Four pressure sensors built into the valves (one per wheel, but not on the spare wheel). They send a radio signal to the receiver.
– A receiver located under the vehicle, which collects and decodes the information from the sensors and sends it to the **UCH**.
– The **UCH**, which receives the signals from the receiver and decides on the message to be displayed.
– A display (specific or integrated into the instrument panel).

Note:
A second set of four wheel sensors may be identified by the **UCH**. Respect the colour coding of the sensors according to their location.

GETtheMANUALS.org

The following table lists the functions used in the different UCH versions:

	Entry level (N1)	Top of the range (N3)
Relay/fuse box use	*	*
Direction indicators/hazard warning lights	*	*
Hazard warning lights with emergency braking	*	*
Running lights (automatic activation of the side lights and dipped beam headlights)	*	*
Automatic activation of the sidelights and dipped beam headlights	*	*
Follow me home (lighting extension)	*	*
Remote lighting	*	*
Interior lighting (38 W)	*	*
Timed feed	*	*
Side lights	*	*
Bulb failure		*
Failure of brake lights		*
Control of buzzer integrated into instrument panel	*	*
Instrument panel message display	*	*
Intermittent wiper operation	*	*
Automatic windscreen wiper operation	*	*
Opposite direction windscreen wipers	*	*
Rear screen wiper	*	*
Headlight washers	*	*
Management of door locking system	*	*
Door locking system/unlocking of driver's door only	*	*
Door locking system/locking while driving	*	*

GETtheMANUALS.org

	Entry level (N1)	Top of the range (N3)
Door locking system/unlocking on impact	*	*
Door locking system/deadlocking		*
Door locking system/childproof locks		*
Deactivation of fuel filler flap locking on RAID	*	*
VSC1 (keyless vehicle scenario 1)	*	*
VSC2 (keyless vehicle scenario 2)		*
Door locking indicator light	*	*
Door open warning light	*	*
Tailgate and rear screen electric lock	*	*
Tailgate electric striker plate	*	*
+ APC relay control	*	*
Accessories relay 1 and 2 controls	*	*
Starter control	*	*
Reverse gear management	*	*
Engine racing management	*	*
External temperature	*	*
Anti-pinch output	*	*
Multifunction connection to seat and door mirrors		*
Jingle connection		*
Alarm connection	*	*
Card entry (VSC1 or 2)	*	*
Tyre pressure monitoring system	*	*
Encoded transponder/engine immobiliser	*	*
Variable power assisted steering	*	*

GETtheMANUALS.org

	Entry level (N1)	Top of the range (N3)
System clock	*	*
Reprogramming by line K	*	*
ISO KWP 2000 fault finding	*	*
CAN line interface	*	*
Front and rear fog light actuation	*	*
Codes read function defect mode	*	*
Door mirror actuation	*	*

GETtheMANUALS.org

New parts are not coded. When fitted to the vehicle, they must be programmed with a code to make them operational.

To perform this procedure, certain vehicle components must already be correctly coded (refer to the following allocation table).

IMPORTANT
Once a part is programmed with a code, it is allocated to the vehicle; the code cannot be deleted and the part cannot be reprogrammed with another code. The programmed code cannot be erased.

AFTER-SALES OPERATION	STATUS OF COMPONENTS				REPAIR CODE NEEDED
	UCH	**RENAULT Card**	**Injection computer**	**Electric steering column lock**	
Programming the **UCH**	Blank	Programmed	Programmed	-	YES
Programming the **RENAULT Card**	Programmed	Blank*	Programmed	Coded	YES
Programming the **injection computer**	Programmed	Programmed	Blank	Coded	NO
Programming the **electric steering column lock**	Programmed	Programmed	-	Blank	NO

*: The RENAULT Card allocated to a vehicle must be blank or already programmed on this vehicle.
NOTE: These may be programmed on a vehicle but not yet operational (not assigned).

GETtheMANUALS.org

REPLACEMENT OF THE UCH:

A new **UCH** is not coded. When fitted to the vehicle, it must be programmed with a code to make it operational.
To perform this procedure, you must have at least one of the old RENAULT Cards for the vehicle, plus the repair code, and the injection computer must be correctly coded.

IMPORTANT
Once a code has been programmed into the **UCH**, it is allocated to the vehicle and it is not possible to program the UCH with another one.

Manually enter the VIN code on the first page of the Clip tool.
Run the Multiplex network test.
The tool displays Vehicle configuration unknown:
Check the undetected or unrecognised computers.
Click on OK.
In the screen with the list of computers, click on continue.
Select the passenger compartment then click on Run fault finding.
Click on the repair mode and on the program menu.

REMINDER: only the RENAULT cards submitted during the allocation process will be operational. To allocate the cards to the vehicle, run **SC010 Program cards**.

Note:
After each replacement of the **UCH**, carry out the configurations associated with the functions available on the vehicle. Functions not configured will not be operational.
To perform the configurations, see **Configuration and programming**).

WARNING
After each replacement of the UCH, do not forget to program the electrical windows (see **Configuration and programming**), and to re-enter the radio and navigation codes.

GETtheMANUALS.org

REPLACEMENT OF THE ELECTRIC STEERING COLUMN LOCK:

A new **steering column lock** is not coded. It will therefore be important to program it with a code to make it operational.
To perform this procedure, you must have at least one of the old RENAULT Cards for the vehicle, and a **UCH** already coded on the vehicle.

Note:
When replacing the steering column lock (see MR 402 Mechanical systems, 82A, Immobiliser, Removing-refitting the steering column lock).

Note:
WHENEVER REPLACING THE COMPUTER, PERFORM A VIN ENTRY OPERATION (perform the VP004 configuration operation).

REPLACING THE RAIN/LIGHT SENSOR (Vdiag 15 only):

When replacing the rain/light sensor, see **MR 402 Mechanical systems, 85A, wipers - washing**.
Before replacing any rain/light sensor, check that the new rain/light sensor has the same part number as the old one.
After replacing the rain/light sensor, apply configuration **CF199 Rain sensor type** (see **configuration and programming**).

GETtheMANUALS.org

CONFIGURATIONS

NOTES	**These configuration operations must be carried out every time a UCH is replaced and must be checked during every fault finding procedure.**

Index	Title	Specifications and notes
CF009 LC003	Deadlocking	**With or Without**
CF 010 LC001	Hands-free function	**With or Without**
CF011 LC005	Gearbox type	**Manual or Automatic transmission** With manual or automatic transmission
CF014 LC008	Daytime running lights	**With or Without** Warning, do not configure without checking the vehicle specification and the wiring used, otherwise this may not work
CF020 LC014	Type of driving style	**Right-hand or left-hand** With right-hand drive or left-hand drive
CF023 LC017	Tyre Pressure Monitor Function	**With or Without** Tyre Pressure Monitor function.
CF024 LC018	Hazard warning lights switched on by ABS	**With or Without** (In certain countries such as the UK, automatic hazard warning lights during emergency braking are forbidden)
CF030 LC033	Xenon bulb	**With or Without** xenon bulb function
CF032 LC025	See-me-home lighting:	**With or Without**
CF 033 LC026	Electric child safety lock	**With or Without**
CF035 LC044	Rain/light sensor	**With or Without**
CF036 LC029	Selective door opening	**With** This configuration allows the driver's door and luggage compartment lid only to be unlocked on right-hand drive versions when the vehicle is unlocked (normal or hands-free).
CF088 LC049	Automatic door locking warning beep	**Without, 1, 2, 3, 4, 5, 6 or 7** This configuration is used to adjust the buzzer volume. The buzzer is activated when the vehicle is locked using the hands-free function.

GETtheMANUALS.org

NOTES	**These configuration operations must be carried out every time a UCH is replaced and must be checked during every fault finding procedure.**

Index	Title	Features and comments
CF089 LC050	Driver's seat position memory	**With or Without**
CF091 LC052	Sunroof	**With or Without**
CF097 LC011	Vehicle type	**Vel-Satis Ph 2 or Espace IV** Run this command every time the computer is modified or replaced.
CF100 LC032	Hands-free starting	**With or Without**
CF101 LC066	Light sensor sensitivity	**0, 1, 2, 3.**
CF112 LC042	Headlight washers	**With or Without**
CF116 LC048	Hands-free locking	**With or Without**
CF120 LC057	Auto.* window closing (with card)	**With or Without** automatic window closing function (using the card)
CF132 LC051	Vehicle family (Vdiag 14 only)	**Estate or hatch**
CF134 LC063	Type of power-assisted steering	**Basic or variable**
CF169 LC068	Automatic headlighting	**With or without** If the vehicle is equipped with a rain sensor, the function can be configured. Once it has been configured, it can be activated or deactivated by flashing the **dipped headlights** twice
CF174 LC071	Selective opening element opening inhibition	**With** This configuration allows all doors and luggage compartment lid/tailgate to be unlocked on right-hand drive versions when the vehicle is unlocked (normal or hands-free).
LC027	Valve set	**Summer or winter**
LC040	Automatic locking when driving	**With or Without**
CF186 LC092	Automatic fold-in of door mirrors (Vdiag 15 only)	**With or Without** To be configured **WITH** on vehicles with production numbers more recent than S321163 and if the vehicle is fitted with "FR* SEATS WITH MEMORY FUNCTION" (Refer to information available on ICM**).
CF131 LC060	Voice synthesiser	**With or Without**

* auto: automatic
** ICM: Shared World Information
* FR = front

GETtheMANUALS.org

NOTES	**These configuration operations must be carried out every time a UCH is replaced and must be checked during every fault finding procedure.**

Index	Title	Specifications and notes
CF199 **LC101**	**Type of rain/light sensor** (Vdiag 15 only)	In order to identify the rain/light sensor, remove the plastic cover located on the top section of the rear view mirror to display the RENAULT part number on the sensor. **OLD:** This configuration can be applied to all old rain/light sensors (Part no.: 8200063060). Each time the engine is stopped, the user will have to initialise the sensor by activating the windscreen wipers once to make the rain/light sensor operational. **NEW:** This configuration can be applied to sensor part numbers (different to part number: 8200063060). In this case, the user does not need to initialise the rain/light sensor each time the engine is stopped. **SPARE:** This configuration applies to new sensors **only by request of the Techline**. An old sensor will not work if it is configured in this way. This configuration enables a new rain/light sensor to work with initialisation: in this case, each time the engine is stopped, the user will have to initialise the sensor by activating the windscreen wipers to make the rain/light sensor operational.

GETtheMANUALS.org

PROGRAMMING

MANUAL PROGRAMMING OF THE ELECTRICAL WINDOWS:

NOTES	Perform this programming after replacing the **UCH**.

Switch on the ignition.
Lower the electric window to its lower limit.
Raise the electric window to its upper limit.
Electric window programming must be carried out.

Carry out this operation on the other electric windows.

GETtheMANUALS.org

VALVE/WHEEL MATCHING:

Each sensor is matched to a wheel during vehicle manufacture when the UCH is programmed with the identification codes. This is necessary so that a faulty wheel can be identified, as the receiver cannot determine the position of the wheel transmitting.

Changing wheels over without programming the valve codes is **PROHIBITED**. If the wheels are changed over on the vehicle, replace the valve rings at the location described below:
Front left-hand: green
Rear left-hand: red
Front right-hand: yellow
Rear right-hand: black

If the driver wants to swap over his wheels, there are two possible solutions:
– Either remove each sensor and then replace it in its original position on the vehicle;
– Or, using the diagnostic tool, reprogram the new sensor positions into the UCH (you would then need to swap the coloured rings so that they correspond to the order described above).

How do you find out the sensor codes?

There are three possible solutions:
– **The sensor is new:** it has a two-part label, one of which is detachable. The code is written on both parts. The detachable part is used to remind the operator of the code after fitting the sensor on the wheel (it is advisable to temporarily affix this label to the wheel where the sensor is fitted).
– **The sensor is used:** If removed with the label still attached on top, its code can be read.
– **The sensor is already fitted to the wheel and no label is visible:**

In this case:
– either remove the tyre and read the number on the sensor,
– or acquire the sensor codes with the diagnostic tool. The difficulty is that each sensor only transmits once every hour when stationary. Furthermore, if more than one sensor is fitted, it is not possible to determine which sensor transmitted. In this case:
– **either run the wheel at over 12 mph (20 km/h) so that the sensor transmits more often and can therefore be noted (wheel balancer, driving with just one wheel fitted),**
– or force the sensor to transmit using the valve exciter (code feedback and valve status changes to Status 1).

GETtheMANUALS.org

SC002	PROGRAMMING THE 4 VALVE CODES

NOTES	Run this command after replacing the four valves. See above-mentioned section Valve/Wheel matching. **Special note:** Any operations involving valve replacement should not be attempted without full knowledge of the recommendations defined in the **Workshop Repair Manual section 35**.

WARNING
– Check that each sensor is used on the correct wheel:
Green = front left-hand
Yellow = front right-hand
Red = rear left-hand
Black = rear right-hand
– Exercise care when matching valve and wheel codes.
– Ensure that fault **DF052 Valve signal receiver** is not present.

AFTER REPAIR	Carry out a fault finding procedure on the system. Clear the stored faults. Deal with any other faults.

GETtheMANUALS.org

SC002 **CONTINUED**	

There are two possible solutions for programming valve codes:
– With the valve exciter.
– Without the valve exciter.

Automatic programming with valve exciter:
To carry out this programming it is essential to use tool **MS. 1607**.
Procedure:
Establish dialogue with the UCH.
Select the **repair mode** menu.
Select the **Programming** menu.
Select **Tyre programming**.
Confirm scenario **SC002: "Programming the 4 valve codes"**.
Confirm the steps described in the scenario.
End of procedure. The UCH has been programmed with the valve codes.

Manual programming without valve exciter:
For this programming, it is important to use the valve code indicated on the label on the wheel sensor concerned.
Procedure:
Establish dialogue with the UCH.
Select the **repair mode** menu.
Select the **Programming** menu.
Select **Tyre programming**.
Confirm scenario **SC002: "Programming the 4 valve codes"**.
Confirm the steps described in the scenario.
End of procedure. The UCH has been programmed with the valve codes.

AFTER REPAIR	Carry out a fault finding procedure on the system. Clear the stored faults. Deal with any other faults.

GETtheMANUALS.org

GENERAL INFORMATION

The engine immobiliser protection system is controlled by a RENAULT card recognition system with random rolling code.

A coded transponder chip key (operating without a battery) independent of the remote control function is built into each of the vehicle's RENAULT Cards.

The engine immobiliser is active a few seconds after the RENAULT Card is removed from the card reader. When the RENAULT card is removed from the reader, the red warning light flashes on the instrument panel and the steering column lock locks.

To obtain the immobiliser code, see **Technical Note 5037A, Code supply procedure 82A, Immobiliser**.

There are two programming methods: "Not connected" to the code server mode and "connected" to the code server mode.
- In the "not connected" mode, CLIP supplies a programming key and the user enters the immobiliser code.
- In the "connected" mode, CLIP automatically exchanges the programming key and the immobiliser code.

IMPORTANT
If not all of the Renault cards are available, reallocate all Renault cards later. Cards not inserted will no longer be allocated to this vehicle.

IMPORTANT
In "not connected" mode, once the tool has issued the programming key, the user has a limited amount of time in which to enter the immobiliser code.
If this time expires, the CLIP **diagnostic tool** displays the message **"Time expired. Restart the procedure"**.

Note:
If just the UCH is being replaced. There are no operations to be carried out on the injection computer or on the steering column lock. The injection computer and the steering column lock keep the same immobiliser code.

IMPORTANT
Once a part is programmed with a code, it is allocated to the vehicle; the code cannot be deleted and the part cannot be reprogrammed with another code. The programmed code cannot be erased.

IMPORTANT
In "connected" mode, the exchange of the programming key and the entry of the immobiliser code is done automatically.
If the connection parameters are not met, "connected" mode switches automatically to "not connected" mode.

GETtheMANUALS.org

SC004	PROGRAMMING THE UCH

Equipment required
CLIP

The role of this command is to code the UCH.

Use this command only with a new and blank UCH.

A new UCH is not coded and is therefore not assigned to the vehicle; once it is fitted on the vehicle, it must be programmed to assign it to the vehicle.

To carry out this programming operation, you will need to have:
– **a card belonging to the vehicle** (allocated to the old UCH).

Before starting this operation, make sure that there are no components capable of interfering with the electromagnetic field (e.g.: CB (Citizen Band), mobile phone, etc.).

Note:
After an injection computer has been replaced, there are no operations to be performed on the UCH. It retains the same immobiliser code.

Note:
After only the UCH has been replaced, there are no operations to be performed on the injection computers. The computers keep the same immobiliser code.

IMPORTANT
When the UCH programming procedure is successfully completed, the UCH is no longer blank and is permanently assigned to the vehicle. It will not work on another vehicle.

IMPORTANT
When the programming operation is complete, only remove the key once the message **Programming complete** is displayed on the screen. Otherwise, programming has failed and the UCH cannot be used.

AFTER REPAIR	Carry out a fault finding procedure on the system. Clear the stored faults. Deal with any other faults.

GETtheMANUALS.org

SC004 (CONTINUED)	

IMPORTANT
– Do not interrupt the procedure when it is in progress.
– If it is interrupted, restart the procedure; a new programming key will be displayed.

UCH programming procedure

– Establish dialogue with the UCH.
– Select the **repair mode** menu.
– Select the **Secure programming** menu.
– Select line **S0004 UCH programming**.

Follow the instructions on the **CLIP diagnostic tool**.
In "not connected" mode, when the **CLIP diagnostic tool** displays the programming key, make a note of this key and the VIN.
To obtain the immobiliser code, see **Technical Note 5037A, Code supply procedure 82A, Immobiliser**.

IMPORTANT
In "not connected" mode, the programming key can only be used for a limited amount of time, as indicated by the CLIP **diagnostic tool**. After this time has expired, the programming key and its associated immobiliser code are no longer valid. The operation must be restarted from the beginning.

Operations to be carried out after programming the UCH

- Enter the vehicle's VIN to the computer using command **VP004 Enter VIN**.
- After programming the UCH, allocate all the cards using command **SC010 Allocate cards**.
- Configure the equipment that may or may not be present on the vehicle using the commands (see **Configuration and programming**).

AFTER REPAIR	Carry out a fault finding procedure on the system. Clear the stored faults. Deal with any other faults.

GETtheMANUALS.org

SC009	PROGRAMMING A VALVE CODE

NOTES	Activate this command after the valve replacement. See above-mentioned section Valve/Wheel matching. **Special note:** Any operations involving valve replacement should not be attempted without full knowledge of the recommendations defined in the Workshop Repair Manual section 35.

WARNING
– Check that each sensor is in used on the corresponding wheel:
Green = front left-hand
Yellow = front right-hand
Red = rear left-hand
Black = rear right-hand
– Exercise care when matching valve and wheel codes.
– Ensure that fault **DF052 Valve signal receiver** is not present.

AFTER REPAIR	Carry out a fault finding procedure on the system. Clear the stored faults. Deal with any other faults.

GETtheMANUALS.org

SC009 **CONTINUED**	

There are two possible solutions for programming valve codes:
– With the valve exciter.
– Without the valve exciter.

Automatic programming with valve exciter:
To carry out this programming it is essential to use tool **MS. 1607**.
Procedure:
Establish dialogue with the UCH.
Select the **repair mode** menu.
Select the **Programming** menu.
Select **Tyre programming**.
Confirm scenario **SC009: "Programming a valve code"**.
Confirm the steps described in the scenario.
End of procedure. The UCH has been programmed with the valve codes.

Manual programming without valve exciter:
Procedure:
Establish dialogue with the UCH.
Select the **repair mode** menu.
Select the **Programming** menu.
Select **Tyre programming**.
Confirm scenario **SC009: "Programming a valve code"**.
Confirm the steps described in the scenario.
End of procedure. The UCH has been programmed with the valve codes.

AFTER REPAIR	Carry out a fault finding procedure on the system. Clear the stored faults. Deal with any other faults.

GETtheMANUALS.org

SC010	CARD ALLOCATION

Equipment required
CLIP

IMPORTANT
It is not possible to allocate more than two blank cards per operation. If there are more than 2 blank cards to be allocated: allocate 2 blank cards, then restart the procedure with all the cards.

IMPORTANT
Only cards which have been ordered for the vehicle concerned or the vehicle's old cards can be inserted.

IMPORTANT
– Do not interrupt the procedure when it is in progress.
– If it is interrupted, restart the procedure; a new programming key will be displayed.

– Run the Multiplex network test.
– Establish dialogue with the UCH.
– Select the **Repair mode** menu.
– Select the **Secure programming** menu.
– Confirm the line **SC010 Allocate cards**.
The card allocation procedure takes place in two parts:
1 Card insertion stage.
2 Card allocation stage.

Card insertion stage:
The CLIP diagnostic tool requests that the cards to be allocated are inserted. Insert ALL the cards to be allocated (old and new blank cards), any cards not inserted at this stage will be rejected in the **Card allocation** stage and the operation will have to be restarted from the beginning. Once all the cards are inserted, the **Clip diagnostic tool** displays the programming key. To obtain the immobiliser code see **Technical Note 5037A, Code supply procedure, 82A, Immobiliser**.

IMPORTANT
In "not connected" mode, the programming key can only be used for a limited amount of time, as indicated by the **CLIP diagnostic tool**. After this time has expired, the programming key and its associated immobiliser code are no longer valid. The operation must be restarted from the beginning.

Card allocation stage:
Continue the procedure following the instructions on **the CLIP diagnostic tool**.
– Once the cards have been allocated, make sure that all the cards can lock and start the vehicle.

With this system it is not possible to replace some components, such as the UCH and the Renault card as these parts are sold blank and uncoded. These components cannot be coded when replaced unless they have the vehicle's original code stored.

AFTER REPAIR	Carry out a fault finding procedure on the system. Clear the stored faults. Deal with any other faults.

GETtheMANUALS.org

Tool fault	Diagnostic tool title
DF001	UCH
DF002	Steering lock
DF003	Clutch switch circuit
DF005	Card
DF006	Front left-hand wheel valve sensor
DF007	Front right-hand wheel valve sensor
DF008	Rear right-hand wheel valve sensor
DF009	Rear left-hand wheel valve sensor
DF011	Rain/light sensor circuit
DF028	Driver's seat position memory connection
DF029	Steering lock circuit
DF037	Striker panel relay control circuit
DF040	Rear screen wiper park position
DF050	Front tyre pressure imbalance
DF051	Rear tyre pressure imbalance
DF052	Valve signal receiver
DF053	Vehicle speed signal
DF055	Card present switch circuit
DF056	Card fully inserted switch circuit
DF058	Neutral switch circuit
DF060	+ 12 V after ignition feed relay control circuit
DF061	+ 12 V accessories feed relay control circuit
DF062	Starter relay control circuit
DF064	Immobiliser warning light circuit
DF067	Valve codes for the summer set of wheels
DF068	Valve codes for the winter set of wheels
DF072	Child safety lock circuit
DF075	Timed supply circuit

GETtheMANUALS.org

Tool fault	Diagnostic tool title
DF081	Door unlocking button circuit
DF082	Door locking button indicator light circuit
DF084	Child safety button indicator light circuit
DF086	Rear screen wiper relay
DF087	Side lights relay control circuit
DF088	Dipped beam headlights relay control circuit
DF089	Headlight washer relay control circuit
DF090	Left-hand brake lights circuit
DF091	Right-hand brake lights circuit
DF092	Side lights circuit
DF093	Number plate lighting circuit
DF094	Right-hand side light fuses
DF095	Left-hand hand side light fuses
DF096	Brake light fuses
DF098	Main beam headlight relay control circuit

GETtheMANUALS.org

Tool fault	Diagnostic tool title
DF100	Opposing wipers
DF101	Relay/Fuse Box
DF102	Steering motor control circuit
DF103	Variable power assisted steering motor voltage
DF105	Central door locking supply circuit
DF106	Door locking button circuit
DF108	Front fog lights control circuit
DF109	Rear fog lights control circuit
DF110	Direction indicator control circuit
DF111	Front left-hand door optical sensor circuit
DF112	Front right-hand door optical sensor circuit
DF113	Rear left-hand door optical sensor circuit
DF114	Rear right-hand door optical sensor circuit
DF115	Anti-pinch, one-touch window control circuit
DF116	Request to switch off dipped headlights
DF118	Start button

GETtheMANUALS.org

DF001 PRESENT OR STORED	UCH 1.DEF: Internal electronic fault

NOTES	Switch on the ignition.

If the fault is present:
Switch off the ignition.
Disconnect the battery to initialise the **UCH**.
If the fault is still present, contact the Techline.

AFTER REPAIR	Reconfigure the UCH.

GETtheMANUALS.org

DF002 PRESENT OR STORED	STEERING LOCK 1.DEF: Steering lock internal electronic fault

NOTES	Switch the ignition on and off and check the steering lock is released and locked. **Special note:** If the fault is present the immobiliser warning light remains continuously lit.

If the fault is stored:
Disconnect the battery to initialise the **UCH**.
If the fault is still stored, contact the Techline.

If the fault is present:
Replace the steering column lock. For replacement of the **steering column lock**, (see **MR 402 Mechanical, 82A Immobiliser, Removal - Refitting of the steering column lock**).
WARNING
The steering column lock is secured with a reverse thread bolt (left-hand thread). Furthermore, it can only be removed if it has been released beforehand.

AFTER REPAIR	Carry out a fault finding procedure on the system. Clear the stored faults. Deal with any other faults.

GETtheMANUALS.org

DF003 PRESENT OR STORED	CLUTCH SWITCH CIRCUIT CC: Short circuit CO: Open circuit

NOTES	**This fault only applies to manual gearboxes.** There must be no present or stored faults. Switch on the ignition. Depress the clutch pedal.
	The fault appears following: Vehicle being driven at a speed above **3 mph** (**5 km/h**) with the clutch **depressed** for more than **2 minutes** or the vehicle going from **0 to 36 mph** (**0 to 60 km/h**) **128 times** without the clutch signal appearing.
	Special notes: Switch on the ignition. The status **ET048** must be **DEPRESSED** when the clutch pedal is depressed.

Check the connection and condition of the connector for the **clutch pedal switch**.
Make sure that the clutch pedal switch is correctly positioned.
Repair if necessary.

Check for an earth on **track 2** of the **clutch pedal switch**.
Repair if necessary.

Check the **continuity** between **tracks 1** and **2** of the **clutch pedal switch** in the depressed position.
If it is not correct, replace the **clutch pedal switch**.

Check the condition and connection of the black connector**P100** for the **UCH**.
Repair if necessary.

Check the **insulation and continuity** of the following connection:

UCH black connector **P100** (40 track), green connection strip **track 26** ⟶ **Track 1 clutch pedal switch**

If the fault is still present, replace the **clutch pedal switch**.
If the fault is still present contact Techline.

AFTER REPAIR	Carry out a fault finding procedure on the system. Clear the stored faults. Deal with any other faults.

GETtheMANUALS.org

DF005 PRESENT	CARD 1.DEF: Card no. 1 battery low 2.DEF: Card no. 2 battery low 3.DEF: Card no. 3 battery low 4.DEF: Card no. 4 battery low

NOTES	**Condition for appearance of the fault:** The fault appears when the card battery voltage is less than **2.6V**.

Replace the battery in the faulty card.
If the fault is still present, contact the Techline.

AFTER REPAIR	Carry out a fault finding procedure on the system. Clear the stored faults. Deal with any other faults.

GETtheMANUALS.org

DF006 **DF007** **DF008** **DF009** **PRESENT** **OR** **STORED**	FRONT LEFT-HAND WHEEL VALVE SENSOR FRONT RIGHT-HAND WHEEL VALVE SENSOR REAR RIGHT-HAND WHEEL VALVE SENSOR REAR LEFT-HAND WHEEL VALVE SENSOR 1.DEF: No sensor signal

NOTES	These faults only apply if the vehicle is fitted with a tyre pressure monitor: check that **CFD23 Tyre pressure monitor** is **WITH**. **Priority for dealing with a combination of faults:** **DF052**
	Conditions for carrying out a fault finding test on the fault stored. The fault becomes present after a road test.
	Special note: Before any operation, ensure that all the wheels fitted have tyre pressure monitor valves (or that the emergency spare wheel has not been fitted on one of the axles).

The absence of a valve signal may be due to incorrect programming of the valve code or to a faulty valve.
Carry out programming on the valve concerned (see **SC009**), clear the fault and carry out a road test.
If the fault has been rectified, fault finding can end here.
If the fault is still present:
If using a valve exciter:
Take a reading of the valve status from the status menu:
ET032 (FRONT LEFT-HAND WHEEL VALVE SIGNAL)
ET033 (FRONT RIGHT-HAND WHEEL VALVE SIGNAL)
ET034 (REAR RIGHT-HAND WHEEL VALVE SIGNAL)
ET035 (REAR LEFT-HAND WHEEL VALVE SIGNAL)
Perform a forced signal transmission from the faulty valve, if the **STATUS1 FORCED SIGNAL** is not obtained, then replace the valve and perform the programming **SC009 Programming a valve code**.
If not using a valve exciter:
Take a reading of the valve condition in the status menu.
Create an air leak > 0.86 bar and carry out a road test (or wait a quarter of an hour). Note that its status changes to **STATUS3 Transmission due to a pressure variation**.
If **STATUS3** remains the same as the status noted previously, replace the valve and carry out the programming **SC009 Programming a valve code**.

AFTER REPAIR	Carry out a fault finding procedure on the system. Clear the stored faults. Deal with any other faults.

GETtheMANUALS.org

DF011 PRESENT OR STORED	RAIN/LIGHT SENSOR CIRCUIT 1.DEF: Open circuit or short circuit 2.DEF: Sensor internal electronic fault

NOTES	Switch on the ignition, put the windscreen wiper stalk in the automatic position or put the lighting stalk in the automatic position to confirm the fault. The status **ET114 Windscreen wiper request by rain detector** should be Yes or the status **ET278 Automatic activation of the headlights** should be Active or the status **ET115 Headlight activation request by rain sensor** should be Active. Check that the vehicle is configured with a rain/light sensor. Check that **CF035 Rain/light sensor** is **WITH**.

1.DEF	***NOTES***	None.

Check the condition and position of the **F24 (20 A)** fuse in the **Passenger compartment fuse and relay box**.
Check the condition and connection of the black 40-track connector **P100** for the UCH and the connector for the rain sensor.
Check for the **supply** between **track 1** of the **rain/light sensor** and the **front left-hand earth**.
Check the **insulation and the continuity** of the following connections: **UCH** black connector **P100** (40 track), green connection strip **track 23** → **Track 3 rain/light sensor** **Rain/light sensor track 2** → **Front left-hand earth (MB)** **Passenger Compartment Relay/Fuse Box** black connector (CGB2), white connection strip **track 6** → **Track 1 Rain/light sensor**
If the fault is still present, check the **R260 intermediate connector (grey)** on **tracks 8 and 3**. Repair if necessary.
If the fault is still present, replace the rain/light sensor.
If the fault is still present, contact the Techline.

AFTER REPAIR	Carry out a fault finding procedure on the system. Clear the stored faults. Deal with any other faults.

GETtheMANUALS.org

DF011 **CONTINUED**	

2.DEF	***NOTES***	**Special notes:** None.

Replace the rain/light sensor.
If the fault is still present, contact the Techline.

AFTER REPAIR	Carry out a fault finding procedure on the system. Clear the stored faults. Deal with any other faults.

GETtheMANUALS.org

DF028 PRESENT OR STORED	DRIVER'S SEAT POSITION MEMORY CONNECTION 1.DEF: Open circuit or short circuit

NOTES	Switch on the ignition.

Check that the **UCH** is not configured with seat position memory when the feature is not available on the vehicle.

Check the condition and connection of the white 40-track connector **P101** for the **UCH** and check the connector for the seat position memory computer.

Check the **insulation and the continuity** of the following connections:

UCH white connector **P101** green connection strip**track 32** → **Track 27 passenger door multiplex computer**

UCH white connector **P101** green connection strip **track 36** → **Track 15 passenger door multiplex computer**

UCH black connector **P100** green connection strip **track 21** → **Track 27 driver's door multiplex computer**

If the fault is still present, check the **R154** intermediate connector on **tracks D3 and D4**.
Check the intermediate connector **R153 track C8**.
Repair if necessary.

If the fault is still present, contact the Techline.

AFTER REPAIR	Carry out a fault finding procedure on the system. Clear the stored faults. Deal with any other faults.

GETtheMANUALS.org

DF029 PRESENT	STEERING LOCK CIRCUIT CC.1: Short circuit to +12 volts CO.0: Open circuit or short circuit to earth 1.DEF: Lock earth not present or multiplex network fault (e.g.: steering column lock → **UCH** connection)

NOTES	Switch on the ignition.

CC.1 ***CO.1***	***NOTES***	None.

Carry out a multiplex network test.

Check that the steering column lock is correct for the vehicle.

Check the condition and connection of the white 40-track connector **P101** for the **UCH** and the connector for the steering column lock.

Check the **insulation and the continuity** of the following connections:

UCH white 40-track connector **P101** brown connection strip **track 9**	→	**Track 2** connector **for the steering column lock**
UCH white 40-track connector **P101** brown connection strip **track 10**	→	**Track 4** connector for the **steering column lock**
connector for the **steering column lock track 1**	→	Vehicle **earth**
Diagnostic socket **track 6**	→	**Track 3** connector for the **steering column lock**
Diagnostic socket **track 14**	→	**Track 6** connector for the **steering column lock**

Repair if necessary.

If the fault is still present, replace the steering column lock.

If the fault is still present, contact the Techline.

AFTER REPAIR	Carry out a fault finding procedure on the system. Clear the stored faults. Deal with any other faults.

GETtheMANUALS.org

DF029 **CONTINUED**	

1.DEF	***NOTES***	**Special notes**: None.

Carry out a multiplex network test.
Check the **insulation and the continuity** of the following connections: connector for the **steering column lock track 1** ⟶ Vehicle **earth** Repair if necessary.
If the fault is still present, replace the steering column lock.
If the fault is still present, contact the Techline.

AFTER REPAIR	Carry out a fault finding procedure on the system. Clear the stored faults. Deal with any other faults.

GETtheMANUALS.org

DF037 PRESENT OR STORED	STRIKER PLATE CONTROL RELAY CIRCUIT CC.1: Short circuit to + 12 volts

NOTES	**Special notes:** Open the luggage compartment and confirm the fault.

Check for **+12 V** on the tailgate striker panel, component code **1151** on the following connection:
- **BP3A** of component **1151**.

Check the **continuity, insulation**, and the **absence of interference resistance** on the following connection:
- **BP3A** between components **1151** and **260**.

If the connection or connections are faulty and there is a repair procedure (see **Technical Note 6015A, Electrical wiring repair, Wiring: Precautions for repair**), repair the wiring, otherwise replace it.

Check **for earth** on the tailgate striker panel, component code **1151** between the following connection:
- **MF** of component **1151**.

Check the **continuity, insulation**, and the **absence of interference resistance** on the following connection:
- **MF** between component **1151** and **earth**.

If the connection or connections are faulty and there is a repair procedure (see **Technical Note 6015A, Electrical wiring repair, Wiring: Precautions for repair**), repair the wiring, otherwise replace it.

Check the **continuity, insulation**, and the **absence of interference resistance** on the following connection:
- **H81** between components **1151** and **645**.

If the connection or connections are faulty and there is a repair procedure (see **Technical Note 6015A, Electrical wiring repair, Wiring: Precautions for repair**), repair the wiring, otherwise replace it.

Open the tailgate and measure the voltage on connection **H81** at the connector end of component **1151**.
If the voltage is approaching **12 V**, replace the tailgate striker panel, component code **1151**.

If the fault is still present, contact the Techline.

AFTER REPAIR	Carry out a fault finding procedure on the system. Clear the stored faults. Deal with any other faults.

GETtheMANUALS.org

DF040 PRESENT OR STORED	REAR SCREEN WIPER PARK POSITION 1.DEF: Unidentified electrical fault

NOTES	Switch on the ignition and operate the **rear screen wiper**.

Check that there is nothing interfering with the operation of the **rear screen wiper** motor and wiper arm and that they are not jammed.

Check the condition and position of the **F14 (30 A)** fuse in the **passenger compartment fuse and relay box**.
Check for the presence of **+ after ignition feed** on **track 1** of the **rear screen wiper motor**.
Check for the **earth** on **track 3** of the **rear screen wiper**.

Check the condition and connection of the black 40-track connector **P100** for the **UCH** and the connector for the **rear screen wiper motor**.

Check the insulation, continuity and the absence of interference resistance on the following connections:

Rear left-hand earth	→	**Track 3** connector for the **rear screen wiper motor**
Passenger compartment fuse and relay box, grey connector, white connection strip **track 6**	→	**Track 1** connector for the **rear screen wiper motor**
UCH black connector **P100**, green connection strip **track 38**	→	**Track 2** connector for the **rear screen wiper motor**

If the fault is still present, check the **R355 intermediate connector on tracks 1 and 5**.
Repair if necessary.

If the fault is still present, replace the **rear screen wiper motor**.

If the fault is still present contact Techline.

AFTER REPAIR	Carry out a fault finding procedure on the system. Clear the stored faults. Deal with any other faults.

GETtheMANUALS.org

DF050 **DF051** **PRESENT**	FRONT TYRE PRESSURE IMBALANCE REAR TYRE PRESSURE IMBALANCE

NOTES	Ensure that all the wheels fitted have tyre pressure monitor valves, and that the spare wheel has not been fitted.

Check to ensure that the fault is not caused by the wheels having been switched around: see paragraph on **Pairing the valve to the wheel**in the section on **Configuration and programming**.
Check that the recommended pressures entered correspond with the manufacturer's recommendations.
PR009 Front wheels low speed recommended pressure.
PR010 Rear wheels low speed recommended pressure.
PR011 Rear wheels high speed recommended pressure.
PR012 Front wheels high speed recommended pressure.
If they do not, refer to the Procedure for entering the recommended pressures, and run command **VP005 Enter recommended pressures**.
If the entry is correct, check the pressures using a pressure gauge, check the tyre pressure according to the manufacturer's information.
Check that the vehicle is configured with the tyre pressure monitor: **CF023 Tyre pressure monitor** should be **WITH**.

AFTER REPAIR	Carry out a fault finding procedure on the system. Clear the stored faults. Deal with any other faults.

GETtheMANUALS.org

DF052 PRESENT OR STORED	VALVE SIGNAL RECEIVER 2.DEF: Open circuit or short circuit 1.DEF: Unidentified electrical fault

NOTES	**Special note:** When the vehicle is stored, removing the short circuit fuse will lead to a stored fault; in this case, do not replace the receiver and clear the fault. If the customer complaint refers to the intermittent disappearance of the four wheels from the display, then apply the interpretation for this fault.

1.DEF	***NOTES***	None.

Check that the **UCH** is not configured with the Tyre Pressure Monitor (SSPP) when the system is not available on the vehicle.
Check the condition and connection of the white 40-track connector **P100**for the **UCH** and the connector for the tyre pressure monitor receiver (SSPP).
Check the condition and position of the **F50 (20 A)** fuse in the **passenger compartment fuse and relay box**.
Check that there is a supply between: **Earth** → **Track 3** of the connector for the underbody receiver **F50 unit fuse** → **Track 4** of the connector for the underbody receiver
Ensure the continuity and the insulation of the following connection: Receiver connector **track 1** → **Track 18** UCH **P100**, black connector, brown connection strip
If the fault is still present, switch off the ignition and change the underbody receiver.
If the fault is still present, contact the Techline.

AFTER REPAIR	Carry out a fault finding procedure on the system. Clear the stored faults. Deal with any other faults.

GETtheMANUALS.org

DF052 **CONTINUED**	

1.DEF	***NOTES***	None.

Check that the **UCH** is not configured with the **tyre pressure monitor** if the vehicle is not fitted with it.
Check the connection and status of the **P100** 40 track UCH black connector and the **tyre pressure monitor** receiver connector.
Manipulate the wiring harness between the **UCH** and the **Tyre Pressure Signal Unit**, to check for a change in fault status (Present ↔ Stored). Look for possible damage to the wiring harness and check the condition of the black connector **P100 for the Tyre Pressure Signal Unit** and check the condition of the connector for the **Tyre Pressure Signal Unit**. Repair if necessary.
Check for the presence of **+ 12 V** on **track 4** of the **Tyre Pressure Signal Unit** connector.
Check the **insulation, continuity and absence of interference resistance** on the following connections: UCH black connector **P100, brown** connection strip **Track 18** → **Track 1** Connector for the **underbody receiver** **Underbody receiver connector track 3** → **Tunnel electronic earth**
Check the **intermediate connector R351 track 2**. Repair if necessary

Manipulate the wiring harness between **unit fuse F50 (20 A)** and the **Tyre Pressure Signal Unit** to check for a change in fault status (Present ↔ Stored). Look for possible damage to the wiring harness and check the condition of the black connector **P100 for the Tyre Pressure Signal Unit** and check the condition of the connector for the **Tyre Pressure Signal Unit**. Repair if necessary.
Check for the presence of **+ 12 V** on **track 4** of the **Tyre Pressure Signal Unit** connector.
Check the **insulation, continuity and absence of interference resistance** on the following connection: **underbody receiver track 4** → **F50 unit fuse (20A)** Check the **intermediate connector R351 track 2**. Repair if necessary.
If the fault is still present, replace the **Tyre Pressure Signal Unit**.
If the fault is still present, contact the Techline.

AFTER REPAIR	Carry out a fault finding procedure on the system. Clear the stored faults. Deal with any other faults.

GETtheMANUALS.org

DF053 PRESENT OR STORED	VEHICLE SPEED SIGNAL 1.DEF: No vehicle speed signal 2.DEF: Inconsistent vehicle speed

NOTES	None.

Carry out fault finding on the **multiplex network** (see **88B, Multiplexing**).
Run a complete fault finding procedure on the **ABS system** (see **38C, Anti-lock braking system**).

AFTER REPAIR	Carry out a fault finding procedure on the system. Clear the stored faults. Deal with any other faults.

GETtheMANUALS.org

DF055 PRESENT OR STORED	CARD PRESENT SWITCH CIRCUIT CO.0: Open circuit or short circuit to earth

NOTES	Insert the card halfway into the reader. The vehicle must be equipped with the VSC1 cardless vehicle system only.

Check the condition and position of the **F11 (10 A)** fuse in the passenger compartment fuse box.

Check the condition and connection of the connectors **P101** and **P100** for the **UCH** and the connector for the card reader.

Check for the presence of an earth on **track 8** and check for **+ 12V** on **track 2** of the card reader.

Check the continuity and insulation of the following connections:

UCH white connector **P101, brown connection strip, track 12**	→	**Track 5** card reader
UCH black connector **P100, brown connection strip, track 1**	→	**Track 7** card reader
UCH black connector **P100, brown connection strip, track 6**	→	**Track 1** card reader
UCH black connector **P100, brown connection strip, track 19**	→	**Track 4** card reader

Repair if necessary.

If the fault is still present, replace the card reader.

If the fault is still present, contact the Techline.

AFTER REPAIR	Carry out a fault finding procedure on the system. Clear the stored faults. Deal with any other faults.

GETtheMANUALS.org

DF056 PRESENT OR STORED	CARD FULLY INSERTED SWITCH CIRCUIT CO.0: Open circuit or short circuit to earth

NOTES	Insert the card into the card reader up to the stop. Not used if vehicle has "hands-free" option.

Check the condition and positioning of the **F11 10A** fuse in the passenger compartment fuse box.

Check the condition and connection of the connectors **P101** and **P100** for the **UCH** and the connector for the card reader.

Check for the presence of an earth on **track 8** and check for **+ 12V** on **track 2** of the card reader.

Check the continuity and insulation of the following connections:

UCH white connector **P101, brown connection strip, track 12**	→	**Track 5** card reader
UCH black connector **P100, brown connection strip, track 1**	→	**Track 7** card reader
UCH black connector **P100, brown connection strip, track 6**	→	**Track 1** card reader
UCH black connector **P100, brown connection strip, track 19**	→	**Track 4** card reader

Repair if necessary.

If the fault is still present, replace the card reader.

If the fault is still present, contact the Techline.

AFTER REPAIR	Carry out a fault finding procedure on the system. Clear the stored faults. Deal with any other faults.

GETtheMANUALS.org

DF058 PRESENT OR STORED	NEUTRAL SWITCH CIRCUIT CC.1: Short-circuit to + 12 V CO: Open circuit

NOTES	**On manual gearboxes only.** Switch on the ignition. Select neutral: the switch status must be active.

Check the condition and position of the **F24** (**20 A**) fuse in the passenger compartment fuse box.
Check the condition and connection of the black 40-track connector **P100** for the **UCH** and the connector for the neutral switch.
Check the insulation, continuity and the absence of interference resistance on the following connection: UCH black connector **P100** 40 track **Track 7** ⟶ **Track 3** Switch
Check for the presence of **+ after ignition feed** on **track 2** of the neutral switch.
Check that the switch is correctly fitted to the gearbox, dismantle the switch and press the On/Off switch. The neutral switch status changes to active and then the reversing lights come on. Replace the switch if it is faulty.
If the fault is still present, replace the switch.
If the fault is still present, contact the Techline.

AFTER REPAIR	Carry out a fault finding procedure on the system. Clear the stored faults. Deal with any other faults.

GETtheMANUALS.org

DF060 PRESENT OR STORED	+ 12 V AFTER IGNITION FEED RELAY CONTROL CIRCUIT CC: Short circuit 1.DEF: After ignition inconsistency

NOTES	Switch on the ignition.

CC	***NOTES***	None.

Check the correct operation and position of the **+ after ignition feed relay** (**RL 22**) on the fuse and relay box. Replace it if necessary.
If the fault is still present, replace the relay **RL 22**.
If the fault is still present, contact the Techline.

1.DEF	***NOTES***	None.

In the wiring, check that there is no short circuit between **+ before ignition feed** and **+ after ignition feed** or between **+ accessories feed** and **+ after ignition feed** (e.g. window switch, brake light switch)
Check the correct operation and position of the **+ after ignition feed** relay on the fuse and relay box. Replace it if necessary.
If the fault is still present, replace the relay **RL 22**. If the fault is still present, contact the Techline.

AFTER REPAIR	Carry out a fault finding procedure on the system. Clear the stored faults. Deal with any other faults.

GETtheMANUALS.org

DF061 PRESENT OR STORED	+ 12 V ACCESSORIES FEED RELAY CONTROL CIRCUIT CC: Short circuit

NOTES	Switch on the ignition.

Check the condition of the connectors **U1** and **U2** for the **UCH** as well as the connectors for the fuse and relay box. Check that the fuse and relay box is correctly positioned and connected to the **UCH**.
Check the operation of the **+ accessories feed relays** (**RL 18** and **19**) on the fuse and relay box. Replace the relays if necessary.
If the fault is still present, contact the Techline.

AFTER REPAIR	Carry out a fault finding procedure on the system. Clear the stored faults. Deal with any other faults.

GETtheMANUALS.org

DF062 PRESENT OR STORED	STARTER RELAY CONTROL CIRCUIT CC: Short circuit

NOTES	Switch on the ignition.

Check the condition of the **UCH** U1 and U2 connectors and the fuse and relay box connectors. Check that the fuse and relay box is correctly positioned and connected to the **UCH**.
Check that the **internal starter relay RL 20** is operating correctly.
If the fault is still present, replace the **Passenger Compartment Fuse and Relay Box**.
If the fault is still present, contact the Techline.

AFTER REPAIR	Carry out a fault finding procedure on the system. Clear the stored faults. Deal with any other faults.

GETtheMANUALS.org

DF064 PRESENT	IMMOBILISER WARNING LIGHT CIRCUIT 1.DEF: Open circuit or short circuit

NOTES	Switch on the ignition.

Check the condition and connection of the white 40-track connector **P101** for the **UCH** and the connector for the instrument panel.
Check the insulation, continuity and absence of interference resistance on the following connection: **UCH** white connector **P101 track 14** ⟶ **Track 5** of the Instrument Panel Repair if necessary.
If the fault is still present, contact the Techline.

AFTER REPAIR	Carry out a fault finding procedure on the system. Clear the stored faults. Deal with any other faults.

GETtheMANUALS.org

DF067 **DF068** **PRESENT**	VALVE CODES FOR THE SUMMER SET OF WHEELS VALVE CODES FOR THE WINTER SET OF WHEELS 1.DEF: At least one valve code is missing 2.DEF : There are at least two identical valve codes

NOTES	Any operations involving changing a valve or replacing a tyre should not be attempted without full knowledge of the recommendations laid out in the Workshop Repair Manual. Check that configuration **CF023 Tyre pressure monitor** is **WITH**.

1.DEF	***NOTES***	**Special note:** Before any operation, check that all the wheels fitted have a tyre pressure monitoring valve and that the spare wheel has not been fitted.

If the UCH has not been programmed with valve codes for one of the two types of wheel set (summer or winter), the fault is classed as 'normal' and will always be present. In this case, the only solution to prevent the fault from reappearing is to program the same valve codes for the two types of wheel set, using command **SC002 Program 4 valve codes** or **SC009 Program one valve code**.
If the UCH recognises codes for both types of wheel (on the parameter menu), it is because the code has been programmed incorrectly or the wrong set of wheels has been stored in the memory.
In the identification menu, note the type of wheel set stored (winter or summer).
Go to the parameter menu and take a reading of the valve codes assigned to the stored wheel type set.
Program the four valve codes (see **configuration and programming, SC002 Program 4 valve codes or SC009 Program one valve code**.
If they do not correspond, program the missing codes or amend the incorrect codes.
Carry out a road test to confirm that the fault has been rectified.

2.DEF	***NOTES***	None.

Repeat the valve code programming procedure from the beginning.

AFTER REPAIR	Carry out a fault finding procedure on the system. Clear the stored faults. Deal with any other faults.

GETtheMANUALS.org

DF072 PRESENT OR STORED	CHILD SAFETY LOCK CIRCUIT CC.0: Short circuit to earth CC: Short circuit

NOTES	**Special notes:** Switch on the ignition and press the child safety lock button.

Check the condition and position of the central door locking fuse.

Check the condition and connection of the white 40-track connector **P101** for the **UCH** and the connector for the rear door electric central locking motors.

Check the insulation to **+ 12V** and to **earth** of the following connections:

UCH white connector **P101, brown connection strip, track 4**	→	**Track A** of the rear right-hand door electric central locking motor.
UCH white connector **P101, green connection strip track 21**	→	**Track F** of the rear left-hand door central locking motor.

Repair if necessary.

Check that the rear door central locking motors are working properly.
Replace them, if necessary.

If the fault is still present, contact the Techline.

AFTER REPAIR	Carry out a fault finding procedure on the system. Clear the stored faults. Deal with any other faults.

GETtheMANUALS.org

DF075 PRESENT OR STORED	TIMED SUPPLY CIRCUIT CC: Short circuit

NOTES	Switch on the ignition.

Check the condition of the **UCH** U1 and U2 connectors and the fuse and relay box connectors. Check that the fuse and relay box is correctly positioned and connected to the **UCH**.
If the fault is still present contact Techline.

AFTER REPAIR	Carry out a fault finding procedure on the system. Clear the stored faults. Deal with any other faults.

GETtheMANUALS.org

DF081 PRESENT	DOOR UNLOCKING BUTTON CIRCUIT CC.0: Short circuit to earth

NOTES	**Special notes:** Switch on the ignition and press the door unlocking button.

Check the condition and connection of the black 40-track connector **P100** for the **UCH** and the connector for the door unlocking button.

Check the insulation, continuity and absence of interference resistance on the following connection:

UCH black connector **P100**, brown connection strip **track 17** → **Track B1** of the door unlocking button

Repair if necessary.

Check the condition of the door unlocking button and that it is working properly. Replace it, if necessary.

If the fault is still present, contact Techline.

AFTER REPAIR	Carry out a fault finding procedure on the system. Clear the stored faults. Deal with any other faults.

GETtheMANUALS.org

DF082 PRESENT OR STORED	DOOR LOCKING BUTTON INDICATOR LIGHT CIRCUIT 1.DEF: Open circuit or short circuit

NOTES	**Special notes**: Switch on the ignition and press the door locking button.

Check the condition of **fuse F24** (20 A).
Check the condition and connection of the black 40-track connector **P100** for the **UCH** and the connector for the door unlocking button.
Check the insulation, continuity and absence of interference resistance on the following connection: **Passenger compartment fuse and relay box** black connector **CGB2** white connection strip **track 6** ⟶ **Track A1** of the central door locking button Repair if necessary.
Check for the presence of **+ 12 V after ignition feed** between **track A1** and the **front right-hand electrical earth**.
Check for the presence of the earth between **track A2** of the central door locking button and the **front right-hand electrical earth**.
Check the condition of the door locking button and that it is working properly. Replace it, if necessary.
If the fault is still present, contact Techline.

AFTER REPAIR	Carry out a fault finding procedure on the system. Clear the stored faults. Deal with any other faults.

GETtheMANUALS.org

DF084 PRESENT OR STORED	CHILD SAFETY BUTTON INDICATOR LIGHT CIRCUIT 1.DEF: Open circuit or short circuit

NOTES	**Special notes:** Switch on the ignition and press the child safety lock button.

Check the condition and connection of the white connector **P101** for the UCH and the connector for the child safety lock button.
Check the insulation, continuity and absence of interference resistance on the following connection: UCH white connector **P101 track 24** ⟶ **Track B3** of the child safety lock button Repair if necessary.
Check the condition of the child safety lock button and that it is working properly. Replace it, if necessary.
If the fault is still present, contact Techline.

AFTER REPAIR	Carry out a fault finding procedure on the system. Clear the stored faults. Deal with any other faults.

GETtheMANUALS.org

DF086 PRESENT OR STORED	REAR WIPER RELAY CC.1: Short circuit to + 12 V

NOTES	Switch on the ignition and the rear screen wiper.

Check the condition and correct position of the **F14 (30 A) fuse**. Replace the fuse if necessary.
Check the condition of the **UCH** U1 and U2 connectors and the Relay/Fuse Box connectors. Check that the relay/fuse box is correctly positioned and connected to the **UCH**.
Check that **RL 15 the internal starter relay** is positioned and operating correctly.
If the **RL 15 internal relay** does not work, replace the Relay/Fuse Box; if the fault is still present, contact the Techline.

AFTER REPAIR	Carry out a fault finding procedure on the system. Clear the stored faults. Deal with any other faults.

GETtheMANUALS.org

DF087 PRESENT OR STORED	SIDE LIGHTS RELAY CONTROL CIRCUIT CC : Short circuit

NOTES	Switch on the ignition.

Check the condition of the **UCH** U1 and U2 connectors and the Relay/Fuse Box connectors.
Check that the relay/fuse box is correctly positioned and connected to the **UCH**.

Check the condition **and position** of **fuses F04 (7.5 A)** and **F05 (7.5 A)**.

Manipulate the wiring harness between the **stalk** and the **UCH** in order to detect a fault status change (present ↔ stored).
Look for any harness damage and check the condition of the **P101 UCH** white connector and the **stalk** connector. Repair if necessary.

Check the **insulation, continuity and the absence of interference resistance** on the following connection:

the UCH white connector (40-track), green connection strip **track 29** ⟶ **Track B1 stalk** connector.

If the fault is still present, contact the Techline.

AFTER REPAIR	Carry out a fault finding procedure on the system. Clear the stored faults. Deal with any other faults.

GETtheMANUALS.org

DF088 PRESENT	DIPPED BEAM HEADLIGHTS RELAY CONTROL CIRCUIT 1.DEF: Open circuit or short circuit

NOTES	Switch on the ignition.

Check the condition of the **UCH** U1 and U2 connectors and the Relay/Fuse Box connectors.
Check that the relay/fuse box is correctly positioned and connected to the **UCH**.

Check the condition of fuses **F2 (15 A), F17 (15 A), F19 (5 A)** of the **Relay/Fuse Box**; replace them if necessary.
Check the condition of the bulb, replace if necessary.

Manipulate the wiring harness between the **UCH** and the **stalk** in order to detect a fault status change (present ↔ stored).
Look for any harness damage and check the condition of the **UCH P101** white connector and the **stalk** connector.
Repair if necessary.

Check **the continuity and insulation** of the following connection:

UCH P101 white 40-track **connector**, green connection strip **track 6** ⟶ **Track B3** stalk black connector

Repair if necessary.

Replace the relay/fuse box and, if the fault is still present, contact Techline.

AFTER REPAIR	Carry out a fault finding procedure on the system. Clear the stored faults. Deal with any other faults.

GETtheMANUALS.org

DF088 **CONTINUED**	

Manipulate the wiring harness between the **Relay/Fuse box** and the **stalk** in order to detect a fault status change (present ↔ stored).
Look for possible damage to the harness, check the condition of the **Relay/Fuse Box** black connector and the **stalk** connector.
Repair if necessary.

Check the **insulation, continuity and the absence of interference resistance** on the following connection:

Relay/Fuse Box black connector, black connection strip **track 4** → **Track B2 stalk** black connector

Repair if necessary.

Manipulate the wiring harness between the **Relay/Fuse Box** and the **headlight** in order to detect a fault status change (present ↔ stored).
Look for possible damage to the harness, check the condition of the **Relay/Fuse Box** black connector and the **headlight** connector.
Repair if necessary.

Check for **+ 12 V** on **track 4** of the **headlight** connector.

Check for earth on **track 1** of the **headlight** connector and the **front panel earth**.

Check the **insulation, continuity and the absence of interference resistance** on the following connections:

Relay/Fuse Box black connector, black connection strip **track 6** → **Track 4** of the **right-hand headlight** black connector

Relay/Fuse Box black connector, black connection strip **track 9** → **Track 4** of the **left-hand headlight** black connector

If the fault is still present, check **intermediate connector R265**.
Repair if necessary.

If the fault is still present, contact the Techline.

AFTER REPAIR	Carry out a fault finding procedure on the system. Clear the stored faults. Deal with any other faults.

GETtheMANUALS.org

DF089 PRESENT OR STORED	HEADLIGHT WASHER RELAY CONTROL CIRCUIT CC.1 : Short circuit to + 12 V

NOTES	**Special notes:** Switch on the ignition, switch on the dipped headlights and activate the windscreen washer.

Check the condition and correct position of the **FM16 (40 A) fuse**.
Check for **+ After relay feed on track D3** of the **passenger compartment fuse and relay box**.
Check that **headlight washer relay R30** is correctly positioned and operational. Replace **headlight washer relay R30** if necessary.
Check the **insulation, continuity and the absence of interference resistance** on the following connections: **UCH P101** white connector (40-track), green connection strip **track 40** → **Track D2** of the **passenger compartment fuse and relay box** **Passenger compartment fuse and relay box, track D4** → **Front right-hand earth**
If the fault is still present, replace the **headlight washer motor**.
If the fault is still present, contact the Techline.

AFTER REPAIR	Carry out a fault finding procedure on the system. Clear the stored faults. Deal with any other faults.

GETtheMANUALS.org

DF090 **DF091** **DF096** **PRESENT** **OR** **STORED**	LEFT-HAND BRAKE LIGHT CIRCUIT RIGHT-HAND BRAKE LIGHT CIRCUIT BRAKE LIGHT FUSES 1.DEF: Unidentified electrical fault

NOTES	**Special notes:** Switch on the ignition, rest a pedal press on the brake pedal.

Check the condition of the **F21 (brake light switch (10 A))** and **F28 (brake lights illumination relay (20 A))** fuses and replace them if necessary.
Check the condition of the **bulb** and replace if necessary.

Check for the presence of **+ 12 V** on **track 4** of the **rear light** connector.

Check for the **earth** between **track 1** of the **rear light** connector and the **rear earth**.

Manipulate the wiring harness between the **Relay/Fuse Box** and the **rear light** in order to detect a fault status change (present ↔ stored).
Look for possible damage to the harness, check the condition of the **relay/fuse box** grey connector and the **brake light** connector.
Repair if necessary.

Check the **continuity and insulation** of the following connections:

Relay/fuse box grey connector, black connection strip **track 8** → **Track 4** of the rear left-hand light connector

Relay/fuse box grey connector, black connection strip **track 6** → **Track 4** of the rear right-hand light connector

Repair if necessary.

If the fault is still present, check the **intermediate connector R297**.
Repair if necessary.

If the fault is still present, contact the Techline.

AFTER REPAIR	Carry out a fault finding procedure on the system. Clear the stored faults. Deal with any other faults.

GETtheMANUALS.org

DF092 **DF094** **DF095** **PRESENT** **OR** **STORED**	SIDE LIGHTS CIRCUIT RIGHT-HAND SIDE LIGHT FUSES LEFT-HAND SIDE LIGHT FUSES 1.DEF: Unidentified electrical fault

NOTES	**Special notes:** Switch on the ignition then the sidelights.

Check the condition of fuses **F3 (10 A), F4 (7.5 A), F5 (7.5 A)** of the **relay/fuse box**, replace them, if necessary.
Check the condition of the bulb, replace if necessary.

Manipulate the wiring harness between the **UCH** and the **stalk** in order to detect a fault status change (present ↔ stored).
Look for any harness damage and check the condition of the **UCH P101** white connector and the **stalk** connector.
Repair if necessary.

Check **the continuity and insulation** of the following connection:

UCH P101 white **connector**, green connection strip **track 29** ⟶ **Track B1** stalk black connector

Repair if necessary.

AFTER REPAIR	Carry out a fault finding procedure on the system. Clear the stored faults. Deal with any other faults.

GETtheMANUALS.org

DF092 **DF094** **DF095** **CONTINUED**	

Manipulate the wiring harness between the **Relay/Fuse box** and the **stalk** in order to detect a fault status change (present ↔ stored).
Look for possible damage to the harness, check the condition of the **Relay/Fuse Box** black connector and the **stalk** connector.
Repair if necessary.

Check the **insulation, continuity and the absence of interference resistance** on the following connection:

Passenger Compartment Relay/Fuse Box black connector, white connection strip **track 5** → **Track B2 stalk** black connector

Repair if necessary.

Manipulate the wiring harness between the **Relay/Fuse Box** and the **headlight** in order to detect a fault status change (present ↔ stored).
Look for possible damage to the harness, check the condition of the **Relay/Fuse Box** black connector and the **headlight** connector.
Repair if necessary.

Check for **+ 12 V** on **track 5** of the **headlight** connector.

Check for the presence of the earth on **track 1** of the **right-hand headlight** connector and the **front panel earth**.

Check the **insulation, continuity and the absence of interference resistance** on the following connections:

Relay/fuse box green connector, black connection strip **track 8** → **Track 5** of the **right-hand headlight** black connector

Relay/fuse box grey connector, black connection strip **track 9** → **Track 5** of the **left-hand headlight** black connector

If the fault is still present, check **intermediate connector R265**.
Repair if necessary.

If the fault is still present, contact the Techline.

AFTER REPAIR	Carry out a fault finding procedure on the system. Clear the stored faults. Deal with any other faults.

GETtheMANUALS.org

DF093 PRESENT OR STORED	NUMBER PLATE LIGHTING CIRCUIT 1.DEF: Unidentified electrical fault

NOTES	**Special notes:** Switch on the ignition then the sidelights.

Check the condition of fuse **F5 (7.5 A)**, of the **passenger compartment fuse and relay box**; replace it if necessary.
Check the condition of the bulb, replace if necessary.

Check for the presence of **+ 12 V** on **track 1** of the **number plate lighting** connector.

Check for the presence of the **earth** between **track 2** of the **number plate light** connector and the **rear earth**.

Manipulate the wiring harness between the **fuse and relay box** and the **number plate light**, in order to detect a change in fault status (present ↔ stored).
Look for possible damage to the harness, check the condition of the **relay/fuse box** white connector and the **headlight** connector.
Repair if necessary.

Check the **insulation, continuity and the absence of interference resistance** on the following connections:

Relay/Fuse Box white connector, white connection strip **track 4**	⟶	**Track 1** right-hand **number plate light** connector
Relay/Fuse Box white connector, white connection strip **track 4**	⟶	**Track 1** left-hand **number plate light** connector

If the fault is still present, check the **R297** and **R236** intermediate connectors.
Repair if necessary.

AFTER REPAIR	Carry out a fault finding procedure on the system. Clear the stored faults. Deal with any other faults.

GETtheMANUALS.org

DF093 **CONTINUED**	

Check the condition of fuse **F3 (10 A)** in the **fuse and relay box**; replace it if necessary.
Check the condition of the bulb, replace if necessary.

Manipulate the wiring harness between the **UCH** and the **stalk** in order to detect a fault status change (present ↔ stored).
Look for any harness damage and check the condition of the **UCH** white connector and the **stalk** connector.
Repair if necessary.

Check **the continuity and insulation** of the following connection:

UCH P101 white connector, green connection strip **track 29** ⟶ **Track B1** stalk black connector

Repair if necessary.

Manipulate the wiring harness between the **Relay/Fuse box** and the **stalk** in order to detect a fault status change (present ↔ stored).
Look for possible damage to the harness, check the condition of the **Relay/Fuse Box** black connector and the **stalk** connector.
Repair if necessary.

Check the **insulation, continuity and the absence of interference resistance** on the following connection:

Passenger Compartment Relay/Fuse Box black connector, white connection strip **track 5** ⟶ **Track B2 stalk** black connector

Repair if necessary.

If the fault is still present, contact the Techline.

AFTER REPAIR	Carry out a fault finding procedure on the system. Clear the stored faults. Deal with any other faults.

GETtheMANUALS.org

DF098 PRESENT OR STORED	MAIN BEAM HEADLIGHT RELAY CONTROL CIRCUIT CC : Short circuit

NOTES	**Special notes:** Switch on the ignition then the main beam headlights.

Check the condition of the **UCH** U1 and U2 connectors and the Relay/Fuse Box connectors.
Check that the relay/fuse box is correctly positioned and connected to the **UCH**.

Check the condition of fuses **F1 (20 A), F7 (15 A), F19 (5 A)** of the **passenger compartment fuse and relay box and fuses FM18 (70 A) and FM 20 (60 A) of the engine fuse and relay box**; replace them if necessary.
Check the condition of the bulb, replace if necessary.

Manipulate the wiring harness between the **UCH** and the **stalk** in order to detect a fault status change (present ↔ stored).
Look for any harness damage and check the condition of the **P100 UCH** black connector and the **stalk** connector.
Repair if necessary.

Check the **continuity and insulation** of the following connections:

UCH P100 black connector, green connection strip **track 32** → **Track B7** of the **stalk** connector

UCH P100 black connector (40 tracks), green connection strip **track 39** → **Track B5** of the **stalk** connector

Repair if necessary.

AFTER REPAIR	Carry out a fault finding procedure on the system. Clear the stored faults. Deal with any other faults.

GETtheMANUALS.org

DF098 **CONTINUED**	

Manipulate the wiring harness between the **Relay/Fuse box** and the **stalk** in order to detect a fault status change (present ↔ stored).
Look for possible damage to the harness, check the condition of the **Relay/Fuse Box** black connector and the **stalk** connector.
Repair if necessary.

Check the **insulation, continuity and the absence of interference resistance** on the following connections:

Relay/Fuse Box black connector, black connection strip **track 3** → **Track B6** of the **stalk** connector.

Relay/Fuse Box black connector, black connection strip **track 4** → **Track B4** of the **stalk** connector

Repair if necessary.

If the fault is still present contact Techline.

Manipulate the wiring harness between the **Relay/Fuse Box** and the **headlight** in order to detect a fault status change (present ↔ stored).
Look for possible damage to the harness, check the condition of the **Relay/Fuse Box** black connector and the **headlight** connector.
Repair if necessary.

Check for **+ 12 V** on **track 2** of the **headlight** connector.

Check for earth on **track 1** of the **headlight** connector and the **front panel earth**.

Check the **insulation, continuity and the absence of interference resistance** on the following connections:

Relay/Fuse Box white connector, black connection strip **track 1** → **Track 2** connector of the **left- or right-hand headlight**

If the fault is still present, check **intermediate connector R265**.
Repair if necessary.

If the fault is still present, contact the Techline.

AFTER REPAIR	Carry out a fault finding procedure on the system. Clear the stored faults. Deal with any other faults.

GETtheMANUALS.org

DF100 PRESENT OR STORED	OPPOSING WIPERS 1.DEF: Wiper system jammed 2.DEF: Wiper system overloaded 3.DEF: Wiper system fault 4.DEF: Open circuit or short circuit

NOTES	**Special notes:** Switch on the ignition, activate the windscreen wiper.

Check the condition of the **UCH** U1 and U2 connectors and the Relay/Fuse Box connectors.
Check that the relay/fuse box is correctly positioned and connected to the **UCH**.

Replace the Relay/Fuse Box and, if the fault is still present, contact the Techline.

Check that there is nothing affecting the operation of the **windscreen wiper motor** and arm and that they are not jammed.

Check the condition and the position of fuses **F14 (30 A)** of the **Passenger compartment fuse/relay box** and **FM23 (60 A)** of the **Motor fuse/relay box**.

Ensure the **+ after ignition feed** between **track 4** of the **windscreen wiper motor** and the **front panel earth connection**.

Check the connection and condition of the **P100 UCH** 40-track black connector and the **windscreen wiper motor** connector.

Check the **insulation, continuity and the absence of interference resistance** on the following connections:

UCH P100 black connector, green connection strip **track 23**	→	**Track 5 windscreen wiper motor** connector
Passenger Compartment Relay/Fuse Box black connector, white connection strip **track 6**	→	**Track 4, windscreen wiper motor** connector
Engine relay/fuse box **track S23**	→	**Track 1** windscreen wiper motor
Front panel earth	→	**Track 2 windscreen wiper motor** connector

Repair if necessary.

If the fault is still present, replace the **windscreen wiper motor**.

If the fault is still present, contact the Techline.

AFTER REPAIR	Carry out a fault finding procedure on the system. Clear the stored faults. Deal with any other faults.

GETtheMANUALS.org

DF101 PRESENT OR STORED	FUSE AND RELAY BOX 1.DEF : Detection of a short circuit in the operation of one or more internal relays in the Relay/Fuse Box after locking or unlocking the doors

NOTES	**Special notes:** Lock or unlock the doors.

Replace the Relay/Fuse Box.

If the fault is still present, contact the Techline.

AFTER REPAIR	Carry out a fault finding procedure on the system. Clear the stored faults. Deal with any other faults.

GETtheMANUALS.org

DF102 PRESENT OR STORED	STEERING MOTOR CONTROL CIRCUIT 1.DEF: Open circuit or short circuit

NOTES	**Special notes:** With the engine running, move the steering wheel to engage the variable power steering motor.

Check that the **UCH** is not configured with variable power-assisted steering when the feature is not available on the vehicle.

Check the connection and condition of the **P101** white **UCH** 40-track connector and the variable power steering motor connector.

Check for the earth on **trackE** of the variable power steering motor.

Check the insulation, continuity and the absence of interference resistance on the following connections:

UCH P101 white connector, **brown connection strip track 2**	→	**Track D** variable power assisted steering motor connector
UCH P101 white connector, **brown connection strip, track 3**	→	**Track B** variable power assisted steering motor connector
UCH P101 white connector, **brown connection strip, track 13**	→	**Track C** variable power assisted steering motor connector
UCH P101 white connector, **brown connection strip track 18**	→	**Track A** variable power assisted steering motor connector

Repair if necessary.

If the fault is still present, replace the power assisted steering motor.

If the fault is still present, contact the Techline.

AFTER REPAIR	Carry out a fault finding procedure on the system. Clear the stored faults. Deal with any other faults.

GETtheMANUALS.org

DF103 PRESENT	VARIABLE POWER ASSISTED STEERING MOTOR VOLTAGE 1.DEF: Voltage outside permitted range of values

NOTES	Switch on the ignition. **Special notes:** The fault may appear when the voltage is greater than **17 V** or less than **9 V** (it can appear after a starter charger has been used).

Check that the battery voltage is correct and carry out fault finding on the charge circuit (the alternator regulator may be faulty).

Test the multiplex network.

If the fault is still present, contact the Techline.

Manipulate the wiring harness between the **UCH** and the **variable power assisted steering motor** to detect a fault status change (present ↔ stored).
Look for any harness damage and check the condition of the **P101 UCH** white connector and the condition of the **variable power steering motor** connector.
Repair if necessary.

Check the **insulation, continuity and the absence of interference resistance** on the following connections:

UCH P101 white connector, brown connection strip **track 2**	→	**Track D variable power assisted steering motor** connector
UCH P101 white connector, brown connection strip **track 3**	→	**Track B variable power steering motor** connector
UCH P101 white connector, brown connection strip **track 13**	→	**Track C variable power assisted steering motor** connector
UCH P101 white connector, brown connection strip **track 18**	→	**Track A variable power steering motor** connector
Variable power steering motor track E	→	**Tunnel electronic earth**

Repair if necessary.

If the fault is still present, contact the Techline.

AFTER REPAIR	Carry out a fault finding procedure on the system. Clear the stored faults. Deal with any other faults.

GETtheMANUALS.org

DF105 PRESENT OR STORED	CENTRAL DOOR LOCKING SUPPLY CIRCUIT CC : Short circuit

NOTES	Switch on the ignition and lock the doors. **Special notes:** The fault may occur anywhere except the tailgate lock. One of the **internal CPE*** relays (**no. 1** to **no. 6**) may be stuck.

Check the condition of the **UCH U1** and **U2** connectors and the Relay/Fuse Box connectors.
Check that the relay/fuse box is correctly positioned and connected to the **UCH**.

Check the conformity of the battery voltage and carry out a fault finding procedure on the charge circuit.

Check the door locking motor wiring (with the exception of the tailgate lock), the absence of short circuit (see wiring diagram, depending on the type of vehicle).

Replace the Relay/Fuse Box.

If the fault is still present, contact the Techline.

CPE*: electric central door locking.

AFTER REPAIR	Carry out a fault finding procedure on the system. Clear the stored faults. Deal with any other faults.

GETtheMANUALS.org

DF106 PRESENT	DOOR LOCKING BUTTON CIRCUIT CC.0 : Short circuit to earth

NOTES	Switch on the ignition and lock the doors.

Check the connection and condition of the **P100** black **UCH** connector and the door locking button connector.
Check insulation against earth of the following connection: **UCH P100** black connector, brown **connection strip track 9** → **Track A3** of the central door locking button Repair if necessary.
Check the condition of the door locking button and that it is working properly. Replace it, if necessary.
If the fault is still present, contact Techline.

AFTER REPAIR	Carry out a fault finding procedure on the system. Clear the stored faults. Deal with any other faults.

GETtheMANUALS.org

DF108 PRESENT OR STORED	FRONT FOG LIGHTS CONTROL CIRCUIT CC.1 : Short circuit to + 12 V

NOTES	Switch on the ignition with the stalk in the position for front fog lights on.

Check the condition of the **UCH U1** and **U2** connectors and the Relay/Fuse Box connectors.
Check that the relay/fuse box is correctly positioned and connected to the **UCH**.

Check the condition of fuse **F19 (5 A)**, of the **Passenger compartment fuse/relay box**, replace it if necessary.
Check the condition of the bulb, replace if necessary.

Manipulate the wiring harness between the **UCH** and the **stalk** in order to detect a fault status change (present ↔ stored).
Look for any harness damage and check the condition of the **UCH P101** white connector and the **stalk** connector.
Repair if necessary.

Check the **continuity and insulation** of the following connections:

UCH P101 white **connector**, green connection strip **track 28** → **Track A1** of the **stalk** connector

UCH P101 white **connector**, green connection strip **track 31** → **Track A3** of the **stalk** connector

Repair if necessary.

AFTER REPAIR	Carry out a fault finding procedure on the system. Clear the stored faults. Deal with any other faults.

GETtheMANUALS.org

DF108 **CONTINUED**	

Manipulate the wiring harness between the **Passenger Compartment Relay/Fuse Box** and the **stalk** in order to detect a change in fault status (present ↔ stored).
Look for possible damage to the harness, check the condition of the **Passenger Compartment Relay/Fuse Box** black connector and the **stalk** connector.
Repair if necessary.

Check **the continuity and insulation** of the following connection:

Stalk track B4 ⟶ **Track 4 Relay/Fuse Box** black connector, black connection strip

Repair if necessary.

Manipulate the wiring harness between the **Passenger Compartment Relay/Fuse Box** and the **front fog light** in order to detect a change in fault status (present ↔ stored).
Look for possible damage to the harness, check the condition of the **Passenger Compartment Relay/Fuse Box** black connector and the **front fog light** connector.
Repair if necessary.

Check **the continuity and insulation** of the following connection:

Relay/fuse box grey connector, white connection strip **Track 5** ⟶ **Track 1 front fog light**

If the fault is still present, check the **R265 intermediate connector, track B10**.
Repair if necessary.
If the fault is still present, contact the Techline.

AFTER REPAIR	Carry out a fault finding procedure on the system. Clear the stored faults. Deal with any other faults.

GETtheMANUALS.org

DF109 PRESENT OR STORED	REAR FOG LIGHTS CONTROL CIRCUIT CC.1 : Short circuit to + 12 V

NOTES	Switch on the ignition with the stalk in the position for rear fog lights on.

Check the condition of fuse **F19 (5 A)**, of the **Passenger compartment fuse/relay box**, replace it if necessary.
Check the condition of the bulb, replace if necessary.

Manipulate the wiring harness between the **UCH** and the **stalk** in order to detect a fault status change (present ↔ stored).
Look for any harness damage and check the condition of the **UCH P101** white connector and the **stalk** connector.
Repair if necessary.

Check the **continuity and insulation** of the following connections:

UCH P101 white **connector**, green connection strip **track 28** → **Track A1** of the **stalk** connector.

UCH P101 white **connector**, green connection strip **track 31** → **Track A3** of the **stalk** connector

Repair if necessary.

Manipulate the wiring harness between the **Passenger Compartment Relay/Fuse Box** and the **stalk** in order to detect a change in fault status (present ↔ stored).
Look for possible damage to the harness, check the condition of the **Passenger Compartment Relay/Fuse Box** black connector and the **stalk** connector.
Repair if necessary.

Check **the continuity and insulation** of the following connection:

Stalk track B4 → **Track 4 Relay/Fuse Box** black connector, black connection strip

Repair if necessary.

AFTER REPAIR	Carry out a fault finding procedure on the system. Clear the stored faults. Deal with any other faults.

GETtheMANUALS.org

DF109 **CONTINUED**	

Manipulate the wiring harness between the **Passenger Compartment Relay/Fuse Box** and the **rear fog light** in order to detect a change in fault status (present ↔ stored).
Look for possible damage to the harness, check the condition of the **Passenger Compartment Relay/Fuse Box** black connector and the **rear fog light** connector.
Repair if necessary.

Check the **continuity and insulation** of the following connections:

Relay/Fuse Box black connector, black connection strip **Track 7** → **Track 5 Rear right-hand fog light**

Relay/Fuse Box black connector, black connection strip **Track 7** → **Track 1 Rear left-hand fog light**

If the fault is still present, check the **R355 intermediate connector, track 1**.
Repair if necessary.
If the fault is still present, contact the Techline.

AFTER REPAIR	Carry out a fault finding procedure on the system. Clear the stored faults. Deal with any other faults.

GETtheMANUALS.org

DF110 PRESENT OR STORED	DIRECTION INDICATOR CONTROL CIRCUIT CO : Open circuit CC.0 : Short circuit to earth 1.DEF: Fuel supply system

NOTES	Switch on the ignition.

1.DEF ***CO*** ***CC***	***NOTES***	**Special note:** With the ignition on and the stalk in right- or left-hand indicator position (not hazard).

Check there is no over-consumption due to too many bulbs being fitted (caravan does not conform).

Manipulate the wiring harness between the UCH and the stalk, in order to detect a change in fault status (present ↔ stored).
Look for possible damage to the harness, check the condition of the stalk connector and the UCH connector.
Repair if necessary.

Check the **continuity and insulation** of the following connections:

Black **UCH connector P100**, green connection strip **track 36** → **Track A5** of the **stalk** connector

Black **UCH connector P100**, green connection strip **track 37** → **Track A7** of the **stalk** connector

Stalk track 1 → **Front left-hand earth**

Repair if necessary.

If the fault is still present, replace the stalk.

AFTER REPAIR	Carry out a fault finding procedure on the system. Clear the stored faults. Deal with any other faults.

GETtheMANUALS.org

DF110 **CONTINUED 1**	

Manipulate the wiring harness between the **Relay/Fuse Box** and the **headlight** in order to detect a fault status change (present ↔ stored).
Look for possible damage to the harness, check the condition of the **Relay/Fuse Box** black connector and the **headlight** connector.
Repair if necessary.

Check for **+ 12 V** on **track 2** of the **headlight** connector.

Check for earth on **track 3** of the **headlight** connector and the **front panel earth**.

Check the **insulation, continuity and the absence of interference resistance** on the following connections:

Relay/Fuse Box white connector, white connection strip **track 6** → **Track 3** of the **right-hand headlight** connector

Relay/Fuse Box grey connector, white connection strip **track 1** → **Track 3** of the **left-hand headlight** connector

If the fault is still present, check the **R265 intermediate connector track B7** and **A7**.
Repair if necessary.

Manipulate the wiring harness between the **Relay/Fuse Box** and the **rear light** in order to detect a fault status change (present ↔ stored).
Look for possible damage to the harness, check the condition of the **Relay/Fuse Box** black connector and the **rear light** connector.
Repair if necessary.

Check for **+ 12 V** on **track 5** of the **rear light** connector.

Check for earth on **track 1** of the **headlight** connector and the **rear right-hand earth**.

Check the **insulation, continuity and the absence of interference resistance** on the following connections:

Relay/Fuse Box white connector, white connection strip **track 6** → **Track 5** of the **rear right-hand light** connector

Relay/Fuse Box grey connector, white connection strip **track 1** → **Track 5** of the **rear left-hand light** connector

If the fault is still present, check the **R297 intermediate connector track 6** and **track 16**.
Repair if necessary.

If the fault is still present, contact the Techline.

AFTER REPAIR	Carry out a fault finding procedure on the system. Clear the stored faults. Deal with any other faults.

GETtheMANUALS.org

DF110 **CONTINUED 2**	

Manipulate the wiring harness between the **Relay/Fuse Box** and the **side mounted indicator** in order to detect a change in fault status (present ↔ stored).
Look for possible damage to the harness, check the condition of the **Relay/Fuse Box** black connector and the **side mounted indicator** connector.
Repair if necessary.

Check for **+ 12 V** on **track 1** of the **side mounted indicator** connector.

Check for the presence of earth on **track 2** of the **side mounted indicator** connector and the **front panel earth (for the right-hand side mounted indicator)** and the front left-hand earth (**for the left-hand side mounted indicator**).

Check the **insulation, continuity and the absence of interference resistance** on the following connections:

Relay/Fuse Box white connector, white connection strip **track 6**	→	**Track 1 right-hand side mounted indicator** connector
Relay/Fuse Box grey connector, white connection strip **track 1**	→	**Track 1 left-hand side mounted indicator** connector

If the fault is still present, check the **R265 intermediate connector tracks B7** and **A7 (this check only concerns the right-hand repeater)**.
Repair if necessary.

If the fault is still present, contact the Techline.

AFTER REPAIR	Carry out a fault finding procedure on the system. Clear the stored faults. Deal with any other faults.

GETtheMANUALS.org

DF111 PRESENT OR STORED	FRONT LEFT-HAND DOOR OPTICAL SENSOR CIRCUIT CC.0 : Short circuit to earth CO : Open circuit

NOTES	**Special note:** The fault appears when the sensor for this door is seen to be active for more than **16 seconds** when the vehicle is being driven or after 32 detections of the door being opened without being detected by the sensor.

Check the condition and connection of the **P100** 40-track black connector on the **UCH** and the front left-hand door optical sensor connector.

Check the **insulation against earth** and the continuity of the following connection:

Black UCH **P100** connector, green connection strip **track 28** → **Track 1** of the optical sensor **connector**

Repair if necessary.

Ensure there is a power feed to the optical sensor between tracks 3 and 2.

If the fault is still present, replace the optical sensor of the front left-hand door.

If the fault is still present, contact the Techline.

AFTER REPAIR	Carry out a fault finding procedure on the system. Clear the stored faults. Deal with any other faults.

GETtheMANUALS.org

DF112 PRESENT OR STORED	FRONT RIGHT-HAND DOOR OPTICAL SENSOR CIRCUIT CC.0 : Short circuit to earth CO : Open circuit

NOTES	**Special note:** The fault appears when the sensor for this door is seen to be active for more than **16 seconds** when the vehicle is being driven or after 32 detections of the door being opened without being detected by the sensor.

Check the condition and connection of the UCH **P100** 40 track black connector and the front right-hand door optical sensor connector.

Check the insulation against **earth** and the continuity of the following connection:

Black UCH **P100** connector, green connection strip **track 33** → **Track 1** of the optical sensor connector

Repair if necessary.

Ensure there is a power feed to the optical sensor between tracks 3 and 2.

If the fault is still present, replace the optical sensor of the front right-hand door.

If the fault is still present, contact the Techline.

AFTER REPAIR	Carry out a fault finding procedure on the system. Clear the stored faults. Deal with any other faults.

GETtheMANUALS.org

DF113 PRESENT OR STORED	REAR LEFT-HAND DOOR OPTICAL SENSOR CIRCUIT CC.0 : Short circuit to earth CO : Open circuit

NOTES	**Special note:** The fault appears when the sensor for this door is seen to be active for more than **16 seconds** when the vehicle is being driven or after 32 detections of the door being opened without being detected by the sensor.

Check the condition and connection of the **P100** 40-track black connector on the **UCH** and the rear left-hand door optical sensor connector.

Check the insulation against **earth** and the continuity of the following connection:

White **UCH P101** connector, green connection strip **track 23** → **Track 1** of the optical sensor **connector**

Repair if necessary.

Ensure there is a power feed to the optical sensor between tracks 3 and 2.

If the fault is still present, replace the optical sensor of the rear left-hand door.

If the fault is still present, contact the Techline.

AFTER REPAIR	Carry out a fault finding procedure on the system. Clear the stored faults. Deal with any other faults.

GETtheMANUALS.org

DF114 PRESENT OR STORED	REAR RIGHT-HAND DOOR OPTICAL SENSOR CIRCUIT CC.0 : Short circuit to earth CO : Open circuit

NOTES	**Special note:** The fault appears when the sensor for this door is seen to be active for more than **16 seconds** when the vehicle is being driven or after 32 detections of the door being opened without being detected by the sensor.

Check the condition and connection of the **P100** 40-track black connector on the **UCH** and the rear right-hand door optical sensor connector.

Check the insulation against **earth** and the continuity of the following connection:

UCH P100 black connector, green connection strip **track 29** → **Track 1** of the optical sensor connector

Repair if necessary.

Ensure there is a power feed to the optical sensor between tracks 3 and 2.

If the fault is still present, replace the optical sensor of the rear right-hand door.

If the fault is still present, contact the Techline.

AFTER REPAIR	Carry out a fault finding procedure on the system. Clear the stored faults. Deal with any other faults.

GETtheMANUALS.org

DF115 PRESENT	ANTI-PINCH ONE TOUCH WINDOW CIRCUIT 1.DEF: Open circuit or short circuit

NOTES	Switch on the ignition.

Check that the **UCH** is not configured with anti-pinch one-touch windows when the feature is not available on the vehicle.

Check the connection and condition of the black **P100** 40-track connector on the **UCH** and the anti-pinch one-touch window connector.

For each anti-pinch electric window, check the insulation and continuity on the following connection:

UCH P100 black connector, green connection strip **track 22** → **track 6** driver's electric window

OR for anti-pinch electric windows with door mirror position memory:

UCH P100 black connector, **green connection strip track 22** → **track 27** driver's electric window

OR for the anti-pinch sunroof:

UCH P100 black connector, green connection strip **track 22** → **track 9** sunroof

If the fault is still present, contact the Techline.

AFTER REPAIR	Carry out a fault finding procedure on the system. Clear the stored faults. Deal with any other faults.

GETtheMANUALS.org

DF116 PRESENT OR STORED	REQUEST TO TURN OFF DIPPED HEADLIGHTS 1.DEF : Request to inhibit the right-hand dipped beam headlight. Carry out a fault finding procedure on the xenon bulb computer 2.DEF : Request to inhibit the left-hand dipped beam headlight. Carry out a fault finding procedure on the xenon bulb computer

NOTES	Switch on the ignition.

Run fault finding on the xenon bulb computer (see **80B, Headlights**).

AFTER REPAIR	Carry out a fault finding procedure on the system. Clear the stored faults. Deal with any other faults.

GETtheMANUALS.org

DF118 PRESENT	START BUTTON 1.DEF : Faulty engine running warning light on the start button 2.DEF : Faulty 'OK to start' indicator light on the Start button

NOTES	Switch on the ignition.

1.DEF	***NOTES***	**Special note:** The fault appears when the engine is running.

Check the condition of the **F11 (10 A)** fuse in the **Passenger Compartment Fuse and Relay Box**, replace it if necessary.

Check the condition and connection of the black **P100** 40-track connector on the **UCH** and the **start button** connector.

Check the insulation and continuity of the following connections:

UCH P100 black connector, **brown connection strip track 3** → **Track 4** of the **Start button**

Passenger Compartment Relay/Fuse Box green connector, black connection strip **track 2** → **Track 2** of the **Start button**

Repair if necessary.

If the fault is still present, replace the Start button.

If the fault is still present, contact the Techline.

AFTER REPAIR	Carry out a fault finding procedure on the system. Clear the stored faults. Deal with any other faults.

GETtheMANUALS.org

DF118 **CONTINUED**	

2.DEF	***NOTES***	**Special note:** The fault appears when the ignition is switched on, a condition for starting.

Check the condition of the **F11 (10 A)** fuse in the **Passenger Compartment Fuse and Relay Box**, replace it if necessary.

Check the condition and connection of the UCH **P100** black 40-track connector and the **Start button** connector.

Check the insulation and continuity of the following connections:

UCH P100 black connector, **brown connection strip track 11** → **Track 3** of the **Start button**

Passenger Compartment Relay/Fuse Box green connector, black connection strip **track 2** → **Track 2** of the **Start button**

Repair if necessary.

If the fault is still present, replace the Start button.

If the fault is still present, contact the Techline.

AFTER REPAIR	Carry out a fault finding procedure on the system. Clear the stored faults. Deal with any other faults.

GETtheMANUALS.org

NOTES	Only check conformity after a **full check** with the diagnostic tool. The values indicated in this conformity check are given as examples.

MAIN COMPUTER STATUSES AND PARAMETERS

Order	Function	Parameter or Status checked or Action		Display and notes	Fault finding
1	UCH	**ET008:**	Blank UCH	**NO** **YES**	Refer to setting **SC004 UCH Programming**
2	Steering lock	**ET071:**	Unprogrammed steering lock	**NO** **YES**	In the event of a fault, refer to the interpretation of status **ET071 Blank steering column lock**
3	Battery voltage	**PR001:**	Battery voltage	**8 V < PR001 < 16 V**	
4	Power supply	**ET238:**	APC relay + 12 V break contact	**ABSENT** **PRESENT**	In the event of a fault, consult status **ET238 APC relay + 12 V break contact**
5		**ET004:**	+ 12 V after ignition feed	**ABSENT** **PRESENT**	In the event of a fault, consult fault **DF060 + 12 V APC relay control circuit**
6		**ET174:**	+ 12 V after ignition feed relay control	**INACTIVE** **ACTIVE**	
7	Set of valves recognised	**ET001:**	Set of valves recognised	**SUMMER** **WINTER**	Ensure that configuration **CF023 Tyre pressure monitor function** is **Active**. Read configuration **LC017 Tyre pressure monitor function**. Perform the programming operations **SC009 Programming a valve code** and **SC002 Programming the 4 valve codes**. If the fault is still present, run fault finding on the **tyre pressure monitor**.

GETtheMANUALS.org

NOTES	Only check conformity after a **full check** with the diagnostic tool. The values indicated in this conformity check are given as examples.

MAIN COMPUTER STATUSESAND PARAMETERS (CONTINUED)

Order	Function	Parameter or Status checked or Action		Display and notes	Fault finding
8	Vehicle speed	**PR008:**	Vehicle speed signal < 9 mph (15 km/h)	**Indicates the vehicle speed.**	In the event of a fault, consult the interpretation of fault **DF053 Vehicle speed signal**
9	Temperature	**PR002:**	External temperature	**Indicates the outside temperature.**	In the event of a fault, refer to the interpretation of parameter **PR002 External temperature**.
10	Driver's seat position memory button	**ET243:**	Driver's seat position memory button	**RELEASED** **DEPRESSED**	Check configuration **CF089 Driver's seat position memory**, Read configuration **LC050 Driver's seat position memory**. In the event of a fault, consult the interpretation of fault **DF028 Driver's seat position memory connection**

GETtheMANUALS.org

NOTES	Only check conformity after a **full check** with the diagnostic tool. The values indicated in this conformity check are given as examples. Ensure that configuration **CF116 Hands-free locking** is WITH, read configuration **LC048 Hands-free locking**.

KEYLESS VEHICLE: ACCESS

Order	Function	Parameter or Status checked or Action		Display and notes	Fault finding
1	RAID	**ET043:**	Renault Anti-Intruder Device (RAID) via central locking function	**ACTIVE** **INACTIVE**	Read configuration **LC040 Automatic locking while driving**. In the event of a fault, consult the interpretation of status **ET043 Authorisation of RAID function by central door locking system**.
2	RF signal received	**ET045:**	RF signal received	**YES (When card is pressed).** **NO**	In the event of a fault, consult the interpretation of status **ET045 RF signal received**.
3	Aerials	**ET225:**	Roof aerial	**GOOD** **POOR**	In the event of a fault, run scenario command **SC026 Aerial test**

GETtheMANUALS.org

NOTES	Only check conformity after a **full check** with the diagnostic tool. The values indicated in this conformity check are given as examples. Ensure that configuration **CF116 Hands-free locking** is WITH, read configuration **LC048 Hands-free locking**.

KEYLESS VEHICLE: ACCESS (CONTINUED 1)

Order	Function	Parameter or Status checked or Action	Display and notes	Fault finding
4	Optical sensor (**VSC2 only**)	**ET328:** Door optical sensor supply	**PRESENT** **ABSENT**	In the event of a fault, consult the interpretation of faults **DF111 Front left-hand door optical sensor circuit, DF112 Front right-hand door optical sensor circuit, DF113 Rear left-hand door optical sensor circuit, DF114 Rear right-hand door optical sensor circuit**.
5		**ET329:** Driver's side optical sensor	**INACTIVE** **ACTIVE**	In the event of a fault, refer to the interpretation of fault **DF111 Front left-hand door optical sensor circuit**
6		**ET330:** Passenger-side optical sensor	**INACTIVE** **ACTIVE**	In the event of a fault, refer to the interpretation of fault **DF112 Front right-hand door optical sensor circuit**
7		**ET241:** Rear left-hand optical sensor	**INACTIVE** **ACTIVE**	In the event of a fault, refer to the interpretation of fault **DF113 Rear left-hand door optical sensor circuit**
8		**ET242:** Rear right-hand optical sensor	**INACTIVE** **ACTIVE**	In the event of a fault, refer to the interpretation of fault **DF114 Rear right-hand door optical sensor circuit**

GETtheMANUALS.org

NOTES	Only check conformity after a **full check** with the diagnostic tool. The values indicated in this conformity check are given as examples. Ensure that configuration **CF116 Hands-free locking** is WITH, read configuration **LC048 Hands-free locking**.

KEYLESS VEHICLE: ACCESS (CONTINUED 2)

Order	Function	Parameter or Status checked or Action	Display and notes	Fault finding
9	Door	**ET053:** Driver's door	**OPEN** **CLOSED**	In the event of a fault, consult the interpretation of status **ET053 Driver's door**
10		**ET042:** Passenger door	**OPEN** **CLOSED**	In the event of a fault, consult the interpretation of status **ET042 Passenger door**
11		**ET051:** Rear left-hand door	**OPEN** **CLOSED**	In the event of a fault, consult the interpretation of status **ET051 Rear left-hand door**
12		**ET052:** Rear right-hand door	**OPEN** **CLOSED**	In the event of a fault, consult the interpretation of status **ET052 Rear right-hand door**
13	Door closing button	**ET186:** Short press on door closing button	**NO** **YES**	In the event of a fault, run scenario command **SC011 Check cards**
14	Door closing button	**ET187:** Long press on door closing button	**NO** **YES**	In the event of a fault, run scenario command **SC011 Check cards**
15	Door opening button	**ET189:** Long press on door opening button	**NO** **SHORT PRESS** **LONG PRESS**	In the event of a fault, run scenario command **SC011 Check cards**
16	Remote lighting (**VSC2 only**)	**ET279:** Remote lighting button press	**NO** **YES**	In the event of a fault, run scenario command **SC011 Check cards**

GETtheMANUALS.org

NOTES	Only check conformity after a **full check** with the diagnostic tool. The values indicated in this conformity check are given as examples. Ensure that configuration **CF116 Hands-free locking** is WITH, read configuration **LC048 Hands-free locking**.

KEYLESS VEHICLE: ACCESS (CONTINUED 3)

Order	Function	Parameter or Status checked or Action	Display and notes	Fault finding
17	Electric door-locking button	**ET044:** Electric door-locking button	**RELEASED** **LOCKING** **UNLOCKING**	In the event of a fault, consult the interpretation of faults **DF081 Door unlocking button circuit** and **DF106 Door locking button circuit**. Refer to the interpretation of status ET044 Central door locking button
18		**ET148:** Central door locking button indicator light	**OFF** **ON**	In the event of a fault, refer to the interpretation of fault **DF082 Door locking button indicator light circuit**
19	Child safety	**ET089:** Electric child safety lock button	**INACTIVE** **ACTIVE**	Ensure that configuration **CF033 Electric child safety lock** is WITH, read configuration **LC026 Electric child safety lock**. In the event of a fault, consult the interpretation of status **ET089 Electric child safety lock button**

GETtheMANUALS.org

NOTES	Only check conformity after a **full check** with the diagnostic tool. The values indicated in this conformity check are given as examples. Ensure that configuration **CF116 Hands-free locking** is WITH, read configuration **LC048 Hands-free locking**.

KEYLESS VEHICLE: ACCESS (CONTINUED 4)

Order	Function	Parameter or Status checked or Action		Display and notes	Fault finding
20	Child safety (continued)	**ET137:**	Child safety lock indicator light	**OFF** **ON**	Ensure that configuration **CF033 Electric child safety lock** is WITH, read configuration **LC026 Electric child safety lock**. In the event of a fault, refer to the interpretation of fault **DF084 Electric child safety lock button indicator light circuit**
21		**ET159:**	Rear left-hand door child safety lock	**INACTIVE** **ACTIVE**	Ensure that configuration **CF033 Electric child safety lock** is WITH, read configuration **LC026 Electric child safety lock**. In the event of a fault, refer to the interpretation of fault **DF072 Electric child safety lock circuit**
22		**ET160:**	Rear right-hand door child safety lock	**INACTIVE** **ACTIVE**	Ensure that configuration **CF033 Electric child safety lock** is WITH, read configuration **LC026 Electric child safety lock**. In the event of a fault, refer to the interpretation of fault **DF072 Electric child safety lock circuit**
23	Tailgate lock	**ET332:**	Tailgate lock control	**LOCK OPENING** **LOCK CLOSING**	In the event of a fault, consult the interpretation of status **ET332 Tailgate/rear screen**
24	Tailgate/rear screen	**ET325:**	Tailgate/rear screen	**CLOSED** **OPEN**	In the event of a fault, refer to the interpretation of fault **DF037 Striker plate relay control circuit**

GETtheMANUALS.org

NOTES	Only check conformity after a **full check** with the diagnostic tool. The values indicated in this conformity check are given as examples. Ensure that configuration **CF116 Hands-free locking** is WITH, read configuration **LC048 Hands-free locking**.

KEYLESS VEHICLE: ACCESS (CONTINUED 5)

Order	Function	Parameter or Status checked or Action	Display and notes	Fault finding
25	Door locking/ unlocking	**AC002:** Door locking/ unlocking	**Ignition on, engine off**	In the event of a fault, ensure that the configuration **CF116 Hands-free locking** is WITH, read configuration **LC048 Hands-free locking**
26	Deadlocking (**VSC2 only**)	**AC035:** Deadlocking	**Ignition on, engine off**	In the event of a fault, check that configuration **CF009 Hands-free deadlocking is** WITH, Read configuration **LC003 Hands-free deadlocking**
27	Deadlock unlocking (**VSC2 only**)	**AC053:** Deadlocking	**Ignition on, engine off**	In the event of a fault, check that configuration **CF009 Hands-free deadlocking is** WITH, Read configuration **LC003 Hands-free deadlocking**
28	Tailgate opening	**AC061:** Tailgate opening	**No particular instructions**	In the event of a fault, refer to the interpretation of status **ET332 Tailgate/rear screen** and fault **DF037 Striker plate relay control circuit**

GETtheMANUALS.org

NOTES	Only check conformity after a **full check** with the diagnostic tool. The values indicated in this conformity check are given as examples. Ensure that configuration **CF116 Hands-free locking** is WITH, read configuration **LC048 Hands-free locking**.

KEYLESS VEHICLE: ACCESS (CONTINUED 6)

Order	Function	Parameter or Status checked or Action		Display and notes	Fault finding
29	Central door locking button indicator light	**AC020:**	Central door locking button indicator light	**With the button indicator light off, run the command**	In the event of a fault, refer to the interpretation of fault **DF082 Door locking button indicator light circuit**
30	Child safety lock indicator light	**AC076:**	Child safety lock indicator light	**Ignition on, engine off**	Ensure that configuration **CF033 Electric child safety lock** is WITH, read configuration **LC026 Electric child safety lock**. In the event of a fault, refer to the interpretation of fault **DF084 Electric child safety lock button indicator light circuit**
31	Interior lights	**AC021:**	Interior lights	**With the interior lights off, run the command**	In the event of a fault, refer to the interpretation of command **AC021 Interior lights on**
32	Audible warning (**VSC2 only**)	**AC013:**	Audible warning	**The audible warning should sound**	Ensure that configuration **CF088 Auto locking audible warning tone is 1, 2, 3, 4, 5, 6 or 7**, read configuration **LC049 Auto locking audible warning tone**. In the event of a fault, refer to the interpretation of command **AC013 Audible warning**

GETtheMANUALS.org

NOTES	Only check conformity after a **full check** with the diagnostic tool. The values indicated in this conformity check are given as examples.

KEYLESS VEHICLE: PROTECTION

Order	Function	Parameter or Status checked or Action		Display and notes	Fault finding
1	UCH	**ET008:**	Blank UCH	**NO** **YES**	Refer to the **SC004 UCH Programming** operation
2	Injection	**ET250:**	Injection	**Programmed** **Blank**	In the event of a fault, test the multiplex network (see **88B**) and run fault finding on the injection computer (see **13B** and **17B**).
3	Card	**PR013:**	Number of cards programmed	**0 < PR013 < 4**	In the event of a fault, perform a card check, run command **SC011 Check cards**, then a card programming operation, perform the **SC010 Card programming operation**.
4		**ET012:**	Card allocated to the vehicle	**YES** **NO**	
5		**PR067:**	Number of hands-free cards programmed	This information indicates the number of cards programmed into the UCH for the remote locking/hands-free unlocking function and for hands-free starting.	If the number of cards present is different from the number of cards programmed, perform a card programming operation with **SC010 Card programming**.

GETtheMANUALS.org

NOTES	Only check conformity after a **full check** with the diagnostic tool. The values indicated in this conformity check are given as examples.

KEYLESS VEHICLE: PROTECTION (CONTINUED 1)

Order	Function	Parameter or Status checked or Action		Display and notes	Fault finding
6	Card (continued)	**ET172:**	Card fully inserted	**YES** **NO**	In the event of a fault, refer to the interpretation of fault **DF056 Card switch fully depressed circuit**.
7		**ET135:**	Card code valid	**YES** **NO**	In the event of a fault, perform a card check, run command **SC011 Check cards**, then a card programming operation, perform the **SC010 Card programming operation**.
8	Engine immobiliser	**ET046:**	Engine immobiliser	**INACTIVE** **ACTIVE**	In the event of a fault, perform a multiplex network test (see **88B**). Refer to the interpretation of status **ET046**.
9		**ET127:**	Immobiliser warning light	**ON** **OFF**	In the event of a fault, refer to the interpretation of fault **DF064 Immobiliser warning light circuit**.
10	Injection	**ET188:**	Disable injection	**NO** **YES**	In the event of a fault, perform a multiplex network test (see **88B**), and run fault finding on the airbags and pretensioners (see **88C**).
11	Steering lock	**ET337:**	Steering column lock supply	**PRESENT** **ABSENT**	In the event of a fault, Refer to the interpretation of fault **DF029 Steering column lock circuit**
12		**PR066:**	Steering column lock supply	**x V**	

GETtheMANUALS.org

NOTES	Only check conformity after a **full check** with the diagnostic tool. The values indicated in this conformity check are given as examples.

KEYLESS VEHICLE: PROTECTION (CONTINUED 2)

Order	Function	Parameter or Status checked or Action		Display and notes	Fault finding
13	Steering lock (continued)	**ET071:**	Unprogrammed steering lock	**NO** **YES**	In the event of a fault, refer to the interpretation of status **ET071 Blank steering column lock**
14		**ET214:**	Incorrect lock code	**NO** **YES**	Replace the steering lock.
15		**ET073:**	Steering lock sensor signal	**LOCKED** **UNLOCKED** **UNDETERMINED**	In the event of a fault, refer to the interpretation of fault **DF029 Steering column lock circuit**
16	Steering column locking	**ET173:**	Steering column locking inhibited	**NO** **YES**	None.
17		**ET283:**	Cause of steering column locking inhibition	**NONE**	**None**
				STATUS1 **STATUS2** **STATUS3**	**Carry out a multiplex network test.**
				STATUS4 **STATUS5** **STATUS6** **STATUS7** **STATUS8**	Refer to the interpretation of status **ET283 Cause of steering column locking inhibition**.

GETtheMANUALS.org

NOTES	Only check conformity after a **full check** with the diagnostic tool. The values indicated in this conformity check are given as examples.

KEYLESS VEHICLE: STARTING

Order	Function	Parameter or Status checked or Action		Display and notes	Fault finding
1	Aerial	**ET406:**	Dashboard aerial	**OK**	In the event of a fault, run scenario command **SC026 Aerial test**
2		**ET405:**	Dashboard/ instrument panel aerial		
3		**ET226:**	Centre console aerial		
4	Hands-free starting	**ET334:**	Hands-free starting	**AUTHORISED** **INHIBITED**	In the event of a fault, perform a test of the hands-free system. Run scenario command **SC012 Hands-free system test**
5	Engine immobiliser	**ET046:**	Engine immobiliser	**INACTIVE** **ACTIVE**	In the event of a fault, perform a multiplex network test (see **88B**). Refer to the interpretation of status **ET046**.
6	Injection	**ET188:**	Disable injection	**NO** **YES**	In the event of a fault, perform a **multiplex network** test (see Section **88B**), and fault finding on the **airbags and pretensioners** (see **88C**)
7	Pedal position	**ET047:**	Brake pedal position	**RELEASED** **DEPRESSED**	In the event of a fault, consult the interpretation of status **ET047 Brake pedal position**
8		**ET048:**	Clutch pedal position	**RELEASED** **DEPRESSED**	In the event of a fault, consult the interpretation of **DF003 Clutch switch circuit**
9	Reverse gear	**ET109:**	Reverse gear engaged	**NO** **YES**	In the event of a fault, consult the interpretation of status **ET109 Reverse gear engaged**
10	Gear lever position	**ET170:**	Automatic gearbox lever position signal	**INACTIVE** **P** **N** **INTERMEDIATE**	In the event of a fault, consult the interpretation of status **ET170 Automatic gearbox lever position signal**

GETtheMANUALS.org

NOTES	Only check conformity after a **full check** with the diagnostic tool. The values indicated in this conformity check are given as examples.

KEYLESS VEHICLE: STARTING (CONTINUED)

Order	Function	Parameter or Status checked or Action		Display and notes	Fault finding
11	Gear lever position (continued)	**ET171:**	Manual gearbox lever position	**BVM lever in neutral Engaged**	In the event of a fault, consult the interpretation of status **ET171 BVM lever position**
12	Start button	**ET070:**	Start button	**RELEASED DEPRESSED**	In the event of a fault, consult the interpretation of status **ET070 Start button**
13	Start button indicator light	**ET338:**	Start button indicator light	**ON OFF**	In the event of a fault, consult the interpretation of fault **DF118 Start button**
14	Engine operating phase	**ET142:**	Engine operating phase	**STOPPED RUNNING STALLED STARTING**	In the event of a fault, test the multiplex network (see **88B**) and perform fault finding on the injection computer (see **13B** and **17B**).
15	OK to start indicator light	**AC047:**	OK to start indicator light	**Ignition on, engine off**	In the event of a fault, consult the interpretation of fault **DF118 Start button**
16	Engine running indicator light	**AC048:**	Engine running indicator light	**Ignition on, engine off**	
17	+ 12 V APC relay	**AC043:**	+ 12 V after ignition feed relay	**Switch off the ignition**	In the event of a fault, refer to the interpretation of fault **DF060 + 12 V APC relay control circuit**
18	+ 12 V ACCESSORIES feed relay	**AC044:**	+ 12 V ACCESSORIES feed relay	**Remove the card from the reader then confirm**	In the event of a fault, refer to the interpretation of fault **DF061 + 12 V accessories feed relay control circuit**

GETtheMANUALS.org

NOTES	Only check conformity after a **full check** with the diagnostic tool. The values indicated in this conformity check are given as examples.

LIGHTING: LIGHTING MANAGEMENT

Order	Function	Parameter or Status checked or Action		Display and notes	Fault finding
1	Automatic headlighting	**ET278:**	Automatic headlighting	**INACTIVE** **ACTIVE**	Ensure that the configuration **CF169 Automatic headlighting** is WITH, read configuration **LC068 Automatic headlighting**. In the event of a fault, refer to the interpretation of **DF011 Rain/light sensor circuit**
2		**ET115:**	Request to switch on lights by light sensor	**INACTIVE** **ACTIVE**	Check configuration **CF035 Rain/light sensor**, read configuration **LC044 Rain/light sensor**. In the event of a fault, refer to the interpretation of **DF011 Rain/light sensor circuit**
3	Lighting stalk	**ET081:**	Lighting switch position	**OFF** **SIDE** **DIPPED** **MAIN BEAM** **HEADLIGHTS** **HAZARD LIGHTS**	In the event of a fault, consult the interpretation of faults: **DF092 Side lights circuit, DF088 Dipped beam relay control circuit and DF098 Main beam headlight control circuit**.
4	Direction indicator request	**ET084:**	Right-hand indicator request	**INACTIVE** **ACTIVE**	In the event of a fault, refer to the interpretation of fault **DF110 Direction indicators control circuit**
5		**ET083:**	Left-hand indicator request	**INACTIVE** **ACTIVE**	
6	Fog lights request	**ET111:**	Front fog lights request	**INACTIVE** **ACTIVE**	In the event of a fault, refer to the interpretation of fault **DF108 Front fog lights control circuit**.

GETtheMANUALS.org

NOTES	Only check conformity after a **full check** with the diagnostic tool. The values indicated in this conformity check are given as examples.

LIGHTING: LIGHTING MANAGEMENT (CONTINUED)

Order	Function	Parameter or Status checked or Action		Display and notes	Fault finding
7	Fog lights request	**ET082:**	Rear fog light request	**INACTIVE** **ACTIVE**	In the event of a fault, refer to the interpretation of fault **DF109 Rear fog light(s) control circuit**.
8	Side lights	**AC055:**	Side lights		In the event of a fault, refer to the interpretation of fault **DF092 Side lights circuit**
9	Dipped headlights	**AC054:**	Dipped headlights		In the event of a fault, refer to the interpretation of fault **DF088 Dipped headlights relay control circuit**
10	Main beam headlights	**AC062:**	Main beam headlights		In the event of a fault, refer to the interpretation of fault **DF098 Side lights relay control circuit**
11	Front fog lights	**AC008:**	Front fog lights		In the event of a fault, refer to the interpretation of fault **DF108 Front fog lights control circuit**
12		**AC009:**	Rear fog lights		In the event of a fault, refer to the interpretation of fault **DF109 Rear fog light(s) control circuit**
13	Hazard warning lights indicator light	**AC052:**	Hazard warning lights indicator light		In the event of a fault, consult the interpretation of status **ET275 Hazard warning light control**
14	Direction indicators	**AC022:**	Left-hand direction indicator		In the event of a fault, refer to the interpretation of fault **DF110 Direction indicators control circuit**
15		**AC023:**	Right-hand direction indicator		

GETtheMANUALS.org

NOTES	Only check conformity after a **full check** with the diagnostic tool. The values indicated in this conformity check are given as examples.

LIGHTING: LIGHTING CONTROL

Order	Function	Parameter or Status checked or Action	Display and notes	Fault finding
1	Side lights	**ET074:** Side lights	**OFF** **ON**	In the event of a fault, refer to the interpretation of fault **DF092 Side lights circuit**
2	Dipped headlights	**ET006:** Dipped headlights	**OFF** **BOTH SIDES** **LEFT** **RIGHT**	In the event of a fault, refer to the interpretation of fault **DF088 Dipped headlights control circuit**
3	Main beam headlights	**ET063:** Main beam headlights	**OFF** **ON**	In the event of a fault, refer to the interpretation of fault **DF098 Main beam headlights control circuit**
4	Fog lights request	**ET124:** Front fog lights	**OFF** **ON**	In the event of a fault, refer to the interpretation of fault **DF108 Front fog lights control circuit**
5		**ET125:** Rear fog lights	**OFF** **ON**	In the event of a fault, refer to the interpretation of fault **DF109 Rear fog light(s) control circuit**
6	Hazard warning lights	**ET275:** Hazard warning lights switch	**INACTIVE** **ACTIVE**	In the event of a fault, consult the interpretation of status **ET275 Hazard warning lights control**
7	Direction indicator	**ET150:** Right-hand direction indicator	**OFF** **ON**	In the event of a fault, refer to the interpretation of fault **DF110 Direction indicators control circuit**
8		**ET151:** Left-hand direction indicator	**OFF** **ON**	

GETtheMANUALS.org

NOTES	Only check conformity after a **full check** with the diagnostic tool. The values indicated in this conformity check are given as examples.

LIGHTING: LIGHTING CONTROL (CONTINUED)

Order	Function	Parameter or Status checked or Action	Display and notes	Fault finding
9	Side lights	**AC055:** Side lights		In the event of a fault, refer to the interpretation of fault **DF092 Side lights circuit**
10	Dipped headlights	**AC054:** Dipped headlights		In the event of a fault, refer to the interpretation of fault **DF088 Dipped headlights relay control circuit**
11	Main beam headlights	**AC062:** Main beam headlights		In the event of a fault, refer to the interpretation of fault **DF098 Side lights relay control circuit**
12	Front fog lights	**AC008:** Front fog lights		In the event of a fault, refer to the interpretation of fault **DF108 Front fog lights control circuit**
13		**AC009:** Rear fog lights		In the event of a fault, refer to the interpretation of fault **DF109 Rear fog light(s) control circuit**
14	Direction indicators	**AC022:** Left-hand direction indicator		In the event of a fault, refer to the interpretation of fault **DF110 Direction indicators control circuit**
15		**AC023:** Right-hand direction indicator		

GETtheMANUALS.org

NOTES	Only check conformity after a **full check** with the diagnostic tool. The values indicated in this conformity check are given as examples.

WIPERS: WIPER CONTROL

Order	Function	Parameter or Status checked or Action		Display and notes	Fault finding
1	Wiper	**ET077:**	Wiper stalk position	**INACTIVE AUTOMATIC LOW-SPEED HIGH-SPEED**	In the event of a fault, consult the interpretation of status **ET077 Wiper stalk position**
2		**PR064:**	Wiper intermittent speed ring position	**500 < PR064 < 720**	In the event of a fault, refer to the interpretation of parameter **PR064 Wiper stalk intermittent speed ring position**
3		**ET114:**	Wiper request by rain sensor	**NO YES**	In the event of a fault, refer to the interpretation of **DF011 Rain/light sensor circuit**
4	Windscreen washer	**ET078:**	Windscreen washer request	**INACTIVE ACTIVE**	In the event of a fault, consult the interpretation of status **ET078 Windscreen washer request**
5		**ET079:**	Rear screen washer request	**INACTIVE ACTIVE**	In the event of a fault, consult the interpretation of status **ET079 Rear screen wash request**
6	Wiper	**ET080:**	Rear screen wiper request	**INACTIVE ACTIVE**	In the event of a fault, refer to the interpretation of fault **DF040 Rear screen wiper park position**.
7		**ET027:**	Windscreen wiper park position	**INACTIVE ACTIVE**	In the event of a fault, refer to the interpretation of fault **DF100 Opposite direction wiping**
8		**ET097:**	Rear screen wiper park position	**INACTIVE ACTIVE**	In the event of a fault, refer to the interpretation of fault **DF040 Rear screen wiper park position**

GETtheMANUALS.org

NOTES	Only check conformity after a **full check** with the diagnostic tool. The values indicated in this conformity check are given as examples.

WIPERS: WIPER CONTROL (CONTINUED)

Order	Function	Parameter or Status checked or Action	Display and notes	Fault finding
9	Wipers (continued)	**AC056:** Low-speed wiper		In the event of a fault, consult the interpretation of status **ET077 Wiper stalk position**
10		**AC007:** Rear screen wiper		In the event of a fault, refer to the interpretation of command **AC007 Rear screen wiper**
11	Headlight washers	**AC030:** Headlight washer relay		In the event of a fault, refer to the interpretation of fault **DF089 Headlight washer relay control circuit** and command **AC030 Headlight washer relay**

GETtheMANUALS.org

NOTES	Only check conformity after a **full check** with the diagnostic tool. The values indicated in this conformity check are given as examples.

WIPERS: WIPER POWER

Order	Function	Parameter or Status checked or Action	Display and notes	Fault finding
1	Wiper motor	**ET134:** Rear wiper motor	**INACTIVE** **ACTIVE**	In the event of a fault, refer to the interpretation of fault **DF040 Rear screen wiper park position**
2	Windscreen wiper park position	**ET097:** Rear screen wiper park position	**INACTIVE** **ACTIVE**	
3		**ET027:** Windscreen wiper park position	**INACTIVE** **ACTIVE**	In the event of a fault, refer to the interpretation of fault **DF097 Windscreen wiper park position circuit**
4	Headlight washers relay control	**ET331:** Headlight washers relay control	**INACTIVE** **ACTIVE**	In the event of a fault, refer to the interpretation of fault **DF089 Headlight washer relay control circuit** and command **AC030 Headlight washer relay**
5	Wiper	**AC056:** Low-speed wiper		In the event of a fault, consult the interpretation of status **ET077 Wiper stalk position**
6		**AC007:** Rear screen wiper		In the event of a fault, refer to the interpretation of command **AC007 Rear screen wiper**
7	Headlight washers	**AC030:** Headlight washer relay		In the event of a fault, refer to the interpretation of fault **DF089 Headlight washer relay control circuit** and command **AC030 Headlight washer relay**

GETtheMANUALS.org

NOTES	Only check conformity after a **full check** with the diagnostic tool. The values indicated in this conformity check are given as examples.

TYRES: TYRE DISPLAY

Order	Function	Parameter or Status checked or Action		Display and notes	Fault finding
1	Warning light	**ET204:**	Tyre pressure monitor indicator light	**OFF** **ON** **INACTIVE**	Ensure that configuration **CF023 Tyre pressure monitor function** is **Active**. Read configuration **LC017 Tyre pressure monitor function**. Check the condition and pressure of the tyres. Refer to the parameters: **PR003 Front left-hand wheel pressure, PR004 Front right-hand wheel pressure, PR005 Rear right-hand wheel** and **PR006 Rear left-hand wheel**. In the event of a fault, consult the interpretation of faults **DF052 Valve receiver** and **DF116 Tyre pressure monitor**. If the fault is still present, run fault finding on the **tyre pressure monitor** function (see **35B**).
2		**ET199:**	Puncture warning light activated by the system	**OFF** **ON** **INACTIVE**	

GETtheMANUALS.org

NOTES	Only check conformity after a **full check** with the diagnostic tool. The values indicated in this conformity check are given as examples.

TYRES: TYRE MANAGEMENT

Order	Function	Parameter or Status checked or Action		Display and notes	Fault finding
1	Set of valves recognised	**ET001:**	Set of valves recognised	**SUMMER** **WINTER**	Ensure that configuration **CF023 Tyre pressure monitor function** is **Active**. Read configuration **LC017 Tyre pressure monitor function**. Perform the programming operations **SC009 Programming a valve code** and **SC002 Programming the 4 valve codes**. If the fault is still present, run fault finding on the **tyre pressure monitor** function (Section **35B**).
2	Recommended pressures	**PR009:**	Front wheels low speed recommended pressure (except motorway)		Ensure that configuration **CF023 Tyre pressure monitor function** is **Active**. Read configuration **LC017 Tyre pressure monitor function**. Perform the configuration operation **VP005 Enter recommended pressures**. Refer to the interpretation of faults **DF052 Valve receiver, DF006 Front left-hand wheel valve sensor, DF007 Front right-hand wheel valve sensor, DF008 Rear right-hand wheel valve sensor and DF009 Rear left-hand wheel valve sensor**. If the fault is still present, run fault finding on the **tyre pressure monitor** function (see **35B**).
3		**PR010:**	Rear wheels low speed recommended pressure (except motorway)		
4		**PR012:**	Front wheels high speed recommended pressure (motorway)		

GETtheMANUALS.org

NOTES	Only check conformity after a **full check** with the diagnostic tool. The values indicated in this conformity check are given as examples.

TYRES: TYRE MANAGEMENT (CONTINUED)

Order	Function	Parameter or Status checked or Action	Display and notes	Fault finding
5	Recommended pressures	**PR011:** Rear wheels high speed recommended pressure (motorway)		Ensure that configuration **CF023 Tyre pressure monitor function** is **Active**. Read configuration **LC017 Tyre pressure monitor function**. Perform the configuration operation **VP005 Enter recommended pressures**. Refer to the interpretation of faults **DF052 Valve receiver, DF006 Front left-hand wheel valve sensor, DF007 Front right-hand wheel valve sensor, DF008 Rear right-hand wheel valve sensor and DF009 Rear left-hand wheel valve sensor**. If the fault is still present, run fault finding on the **tyre pressure monitor** function (see **35B**).

GETtheMANUALS.org

NOTES	Only check conformity after a **full check** with the diagnostic tool. The values indicated in this conformity check are given as examples.

TYRES: TYRE RECEPTION

Order	Function	Parameter or Status checked or Action		Display and notes	Fault finding
1	Valve signal	**ET032:**	Front left-hand wheel valve signal	All 4 statuses must be **NORMAL**	If one or more of the four statuses is not **NORMAL**, refer to the interpretation of statuses **ET032, ET033, ET034** or **ET035**.
		ET033:	Front right-hand wheel valve signal		
		ET034:	Rear right-hand wheel valve signal		
		ET035:	Rear left-hand wheel valve signal		
2	Wheel signal	**ET200:**	Front left-hand wheel transmission	**INACTIVE** **STATUS1 (FORCED TRANSMISSION)** **STATUS2 (THE VALVE BATTERY IS LOW)** **STATUS3 (TRANSMISSION DUE TO PRESSURE VARIATION)** **STATUS4 (TRANSMISSION DUE TO EXCEEDED SPEED THRESHOLD)** **OK**	Ensure that configuration **CF023 Tyre pressure monitor function** is **Active**. Read configuration **LC017 Tyre pressure monitor function**. In the event of a fault, consult the interpretation of faults **DF052 Valve receiver** and **DF006 Front left-hand wheel valve sensor**.
3		**ET201:**	Front right-hand wheel transmission	**INACTIVE** **STATUS1 (FORCED TRANSMISSION)** **STATUS2 (THE VALVE BATTERY IS LOW)** **STATUS3 (TRANSMISSION DUE TO PRESSURE VARIATION)** **STATUS4 (TRANSMISSION DUE TO EXCEEDED SPEED THRESHOLD)** **OK**	Ensure that configuration **CF023 Tyre pressure monitor function** is **Active**. Read configuration **LC017 Tyre pressure monitor function**. In the event of a fault, consult the interpretation of faults **DF052 Valve receiver** and **DF007 Front right-hand wheel valve sensor**.

GETtheMANUALS.org

NOTES	Only check conformity after a **full check** with the diagnostic tool. The values indicated in this conformity check are given as examples.

TYRES: TYRE RECEPTION (CONTINUED 1)

Order	Function	Parameter or Status checked or Action	Display and notes	Fault finding
4	Wheel signal (continued)	**ET203:** Rear left-hand wheel signal	**INACTIVE STATUS1 (FORCED TRANSMISSION) STATUS2 (THE VALVE BATTERY IS LOW) STATUS3 (TRANSMISSION DUE TO PRESSURE VARIATION) STATUS4 (TRANSMISSION DUE TO EXCEEDED SPEED THRESHOLD) OK**	Ensure that configuration **CF023 Tyre pressure monitor function** is **Active**. Read configuration **LC017 Tyre pressure monitor function**. In the event of a fault, consult the interpretation of faults **DF052 Valve receiver** and **DF009 Rear left-hand wheel valve sensor**.
5		**ET202:** Rear right-hand wheel transmission	**INACTIVE STATUS1 (FORCED TRANSMISSION) STATUS2 (THE VALVE BATTERY IS LOW) STATUS3 (TRANSMISSION DUE TO PRESSURE VARIATION) STATUS4 (TRANSMISSION DUE TO EXCEEDED SPEED THRESHOLD) OK**	Ensure that configuration **CF023 Tyre pressure monitor function** is **Active**. Read configuration **LC017 Tyre pressure monitor function**. In the event of a fault, consult the interpretation of faults **DF052 Valve receiver** and **DF008 Rear right-hand wheel valve sensor**.

GETtheMANUALS.org

NOTES	Only check conformity after a **full check** with the diagnostic tool. The values indicated in this conformity check are given as examples.

TYRES: TYRE RECEPTION (CONTINUED 2)

Order	Function	Parameter or Status checked or Action		Display and notes	Fault finding
6	Inflation	**ET196:**	Slight under-inflation	**NO** **YES**	Ensure that configuration **CF023 Tyre pressure monitor function** is **Active**. Read configuration **LC017 Tyre pressure monitor function**. Perform the configuration operation **VP005 Enter recommended pressures**. Refer to the interpretation of faults **DF052 Valve receiver, DF006 Front left-hand wheel valve sensor, DF007 Front right-hand wheel valve sensor, DF008 Rear right-hand wheel valve sensor** and **DF009 Rear left-hand wheel valve sensor**. If the fault is still present, run fault finding on the **Tyre Pressure Monitor** function (see **35B, Tyre pressure monitor**).
7		**ET141:**	Slight over-inflation	**NO** **YES**	
8	Wheel pressure	**PR003:**	Front left-hand wheel pressure	**(In bar)**	
9		**PR004:**	Front right-hand wheel pressure		
10		**PR006:**	Rear left-hand wheel pressure		
11		**PR005:**	Rear right-hand wheel pressure		

GETtheMANUALS.org

NOTES	Only check conformity after a **full check** with the diagnostic tool. The values indicated in this conformity check are given as examples.

POWER ASSISTED STEERING: ASSISTANCE

Order	Function	Parameter or Status checked or Action		Display and notes	Fault finding
1	Power assisted steering motor	**PR060:**	Position of the power steering motor	**Only take this parameter into account for vehicles fitted with ordinary steering (WITHOUT variable power assistance)**	Ensure that configuration **CF134 Type of power steering** is **variable**. Read configuration **LC063 Type of power steering**. In the event of a fault, refer to the interpretation of parameter **PR060 Position of the power steering motor** and fault **DF103 Variable power steering motor voltage**
2		**AC077:**	Power assisted steering motor test	**Ignition on, engine off**	

GETtheMANUALS.org

Tool status	Diagnostic tool title
ET001	Set of valves recognised
ET004	+ 12 V after ignition feed
ET006	Dipped headlights
ET008	Blank UCH
ET012	Card allocated to the vehicle
ET027	Windscreen wiper park position
ET032	Front left-hand wheel valve signal
ET033	Front right-hand wheel valve signal
ET034	Rear right-hand wheel valve signal
ET035	Rear left-hand wheel valve signal
ET042	Passenger door
ET043	Renault Anti-Intruder Device (RAID) via central locking function
ET044	Electric door-locking button
ET045	Radiofrequency signal received
ET046	Immobiliser
ET047	Brake pedal position
ET048	Clutch pedal position
ET052	Rear right-hand door
ET051	Rear left-hand door
ET053	Driver's door
ET063	Main beam headlights
ET070	Start button
ET071	Unprogrammed steering lock
ET073	Steering lock sensor signal
ET074	Side lights
ET077	Wiper stalk position
ET078	Windscreen washer request
ET079	Rear screen washer request
ET080	Rear screen wiper request
ET081	Lighting switch position
ET082	Rear fog lights request

GETtheMANUALS.org

Tool status	Diagnostic tool title
ET083	Left-hand indicator request
ET084	Right-hand indicator request
ET089	Electric child safety lock button
ET097	Rear screen wiper park position
ET109	Reverse gear engaged
ET111	Front fog lights request
ET114	Wiper request by rain sensor
ET115	Request to switch on lights by light sensor
ET124	Front fog lights
ET125	Rear fog lights
ET127	Immobiliser warning light
ET134	Rear wiper motor
ET135	Card code valid
ET137	Child safety lock indicator light
ET141	Slight over-inflation
ET142	Engine operating phase
ET148	Central door locking button indicator light
ET150	Right-hand direction indicator
ET151	Left-hand direction indicator
ET159	Rear left-hand door child safety lock
ET160	Rear right-hand door child safety lock
ET165	+ 12 V accessories feed
ET170	Automatic gearbox lever position signal
ET171	Manual gearbox lever position
ET172	Card fully inserted
ET173	Steering column locking inhibited
ET174	+ 12 V after ignition feed relay control
ET186	Short press on door closing button
ET187	Long press on door closing button
ET188	Disable injection
ET189	Long press on door opening button
ET196	Slight under-inflation

GETtheMANUALS.org

Tool status	Diagnostic tool title
ET199	Puncture warning light lit by system
ET200	Front left-hand wheel transmission
ET201	Front right-hand wheel signal
ET202	Rear right-hand wheel transmission
ET203	Rear left-hand wheel signal
ET204	Tyre pressure monitor indicator light
ET214	Incorrect lock code
ET225	Roof aerial
ET226	Centre console aerial
ET238	APC relay + 12 V break contact
ET241	Rear left-hand optical sensor
ET242	Rear right-hand optical sensor
ET243	Driver's seat position memory button
ET250	Injection
ET275	Hazard warning lights switch
ET278	Automatic headlighting
ET279	Remote lighting button press
ET283	Cause of steering column locking inhibition
ET325	Tailgate/rear screen
ET328	Door optical sensor supply
ET329	Driver's side optical sensor
ET330	Passenger-side optical sensor
ET331	Headlight washers relay control
ET332	Tailgate lock control
ET334	Hands-free starting
ET335	Hands-free locking/unlocking
ET337	Steering column lock supply
ET338	Start button indicator light
ET405	Tailgate/instrument panel aerial
ET406	Dashboard aerial

GETtheMANUALS.org

ET001	VALVE SET RECOGNISED

NOTES	There must be no present or stored faults.

The **ET001 SET OF VALVES RECOGNISED** status gives the type of valves selected according to the season.
The status must be **Summer** or **Winter**.

To modify the valve type, run scenario command **SC002 PROGRAMMING THE 4 VALVE CODES**.

AFTER REPAIR	Carry out a fault finding procedure on the system. Clear the stored faults. Deal with any other faults.

GETtheMANUALS.org

ET032 **ET033** **ET034** **ET035**	REAR RIGHT-HAND WHEEL VALVE SIGNAL REAR LEFT-HAND WHEEL VALVE SIGNAL FRONT RIGHT-HAND WHEEL VALVE SIGNAL FRONT LEFT-HAND WHEEL VALVE SIGNAL

NOTES	**These checks are carried out only if one of the statuses is inconsistent with the system operating conditions.**

WARNING
If the system detects a continual pressure readjustment of 260 mbar or more in one tyre, pressure warnings for all four tyres are cleared.
It is advisable to correct all 4 pressures after a pressure warning on the instrument panel.

NORMAL

The valve signals are **NORMAL** if:
– the valves are recognised by the computer and are operating correctly,
the tyre pressures correspond to the recommended pressures.

STATUS1: NO SIGNAL

If one or more valve signal statuses is/are **STATUS1**, check that:
– the faulty wheel is fitted with a Tyre Pressure Monitor valve,
Carry out programming using command **SC009 Programming a valve code or SC002 Programming the 4 valve codes**.

Check that the valves are not damaged and that they are fitted the right way round.
If the fault is still present, replace the faulty valve(s) (see **MR 353, Mechanical components 35A Wheels and tyres**).

AFTER REPAIR	Carry out a fault finding procedure on the system. Clear the stored faults. Deal with any other faults.

GETtheMANUALS.org

ET032 **ET033** **ET034** **ET035** **CONTINUED 1**	

WARNING
If the system detects a continual pressure readjustment of 260 mbar or more in one tyre, pressure warnings for all four tyres are cleared.
It is advisable to correct all 4 pressures after a pressure warning on the instrument panel.

STATUS2: OVER-INFLATED TYRE

If one or more valve signal statuses are **STATUS2**, adjust the 4 tyre pressures in accordance with the recommended pressures for the vehicle in question.

If one of the statuses is still **STATUS2** after the operation,
consult the following parameters:

PR009 Front wheels low speed recommended pressure
PR010 Rear wheels low speed recommended pressure
PR012 Front wheels high speed recommended pressure
PR011 Rear wheels high speed recommended pressure.

If the values of these parameters do not match the manufacturer's values, use configuration **VP005 Enter recommended pressures**.

STATUS3: TYRE OVER-INFLATED COMPARED WITH THE OTHER 3

If one or more valve signal statuses are **STATUS3**, adjust the pressures of the 4 tyres in accordance with the recommended pressures for the vehicle in question.

If one of the statuses is still **STATUS3** after the operation,
consult the following parameters:

PR009 Front wheels low speed recommended pressure
PR010 Rear wheels low speed recommended pressure
PR012 Front wheels high speed recommended pressure
PR011 Rear wheels high speed recommended pressure.

If the values of these parameters do not match the manufacturer's values, use configuration **VP005 Enter recommended pressures**.

AFTER REPAIR	Carry out a fault finding procedure on the system. Clear the stored faults. Deal with any other faults.

GETtheMANUALS.org

ET032 **ET033** **ET034** **ET035** **CONTINUED 2**	

STATUS4: TYRE UNDER-INFLATED COMPARED WITH THE OTHER 3

If one or more valve signal statuses are **STATUS4**, adjust the pressures of the 4 tyres in accordance with the recommended pressures for the vehicle in question.

If one of the statuses is still **STATUS4** after the operation,
consult the following parameters:

PR009 Front wheels low speed recommended pressure
PR010 Rear wheels low speed recommended pressure
PR012 Front wheels high speed recommended pressure
PR011 Rear wheels high speed recommended pressure.

If the values of these parameters do not match the manufacturer's values, use configuration **VP005 Enter recommended pressures**.

STATUS5: LEAK DETECTION

If one or more valve signal statuses is/are **STATUS5**, check the wheel(s) concerned for leaks
(leak in the tyre, rim wear or corrosion, damaged valve, damaged valve seal, loose valve, etc.).
Carry out the necessary repairs.

AFTER REPAIR	Carry out a fault finding procedure on the system. Clear the stored faults. Deal with any other faults.

GETtheMANUALS.org

ET032 **ET033** **ET034** **ET035** **CONTINUED 3**	

STATUS6: SLIGHTLY UNDER-INFLATED TYRE

If one or more valve signal statuses is/are **STATUS6**, adjust the 4 tyre pressures according to the recommended pressures for the vehicle in question.

If one of the statuses is still **STATUS6** after the operation:
consult the following parameters:

PR009 Front wheels low speed recommended pressure
PR010 Rear wheels low speed recommended pressure
PR012 Front wheels high speed recommended pressure
PR011 Rear wheels high speed recommended pressure.

If the values of these parameters do not match the manufacturer's values, use configuration **VP005 Enter recommended pressures**.

STATUS7: HIGHLY UNDER-INFLATED TYRE

If one or more valve signal statuses are **STATUS7**, adjust the pressures of the 4 tyres in accordance with the recommended pressures for the vehicle in question.

If one of the statuses is still **STATUS7** after the operation,
consult the following parameters:

PR009 Front wheels low speed recommended pressure
PR010 Rear wheels low speed recommended pressure
PR012 Front wheels high speed recommended pressure
PR011 Rear wheels high speed recommended pressure.

If the values of these parameters do not match the manufacturer's values, use configuration **VP005 Enter recommended pressures**.

AFTER REPAIR	Carry out a fault finding procedure on the system. Clear the stored faults. Deal with any other faults.

GETtheMANUALS.org

ET042	PASSENGER DOOR

NOTES	Open the passenger door. Status **ET042 Passenger door** should be OPEN.

If status **ET042** is CLOSED:
Check the connection and condition of the passenger door central locking connector and repair if necessary.
Check the **continuity** between **tracks C** and **D** of the passenger door central locking connector in the door open position. If the checks are not correct, replace the passenger door central door locking.
Check the condition and connection of the **P101 UCH** white connector. Repair if necessary.
Check the **continuity and insulation** of the following connections: **The UCH P101** white connector (40-track), brown connection strip **track 20** → **Track C** of the passenger door central door locking connector. rear left-hand door central locking connector **Track D** → **Passenger earth**
If the fault is still present, check the **intermediate connector R154** on **track B10**. Repair if necessary.
If the fault is still present, contact Techline.

AFTER REPAIR	Carry out a fault finding procedure on the system. Clear the stored faults. Deal with any other faults.

GETtheMANUALS.org

ET043	RAID FUNCTION AUTHORISATION BY CENTRAL DOOR LOCKING SYSTEM

NOTES	There must be no present or stored faults. Check that the **UCH** is configured with Locking while driving. The status should be **ACTIVE** or **DEACTIVATED**

Press the vehicle locking button for more than 5 seconds (with the + after ignition feed on) to activate automatic locking (the electric central door locking status is active).
Press the vehicle locking button for more than 5 seconds (with the + after ignition feed on) to deactivate automatic locking (the electric central door locking status is active).
Press the vehicle lock button for more than 5 seconds (without the + after ignition feed on) to lock the vehicle (specification for Spain).

AFTER REPAIR	Carry out a fault finding procedure on the system. Clear the stored faults. Deal with any other faults.

GETtheMANUALS.org

ET044	CENTRAL DOOR LOCKING BUTTON

NOTES	There must be no present or stored faults. Switch on the ignition and press the central door locking button. The status should be **LOCKING, UNLOCKING**.

If status **ET044** remains **RELEASED**:
Check the condition and connection of the UCH **P100** 40-track black connector (tabs bent, broken, oxidised, etc.). Repair if necessary.
Check the condition and connection of the black central door locking connector (tabs bent, broken, oxidised, etc.). Repair if necessary.
Check the condition of the **F18 (30 A)** and **F24 (20 A)** fuses.
Check for **+ 12 V** on **track B2** of the central door locking control connector.
Check for **+ APC** on **track A1** of the central door locking control connector.

AFTER REPAIR	Carry out a fault finding procedure on the system. Clear the stored faults. Deal with any other faults.

GETtheMANUALS.org

ET044 **CONTINUED**	

Check the **insulation, continuity and the absence of interference resistance** on the following connections:

UCH P100 black connector (green connection strip) **Track 21** → **Track B3** electric central door locking connector

UCH P100 black connector (brown connection strip) **Track 9** → **Track A3** central door locking control connector

UCH P100 black connector (brown connection strip) **Track 17** → **Track B1** central door locking control connector

Repair if necessary.

Check for **continuity** between the central door locking connector **track A2** and the vehicle **earth**.

Check:
The **continuity** of the central door locking switch, tracks **A3** and **B1** (switch pressed).
The **insulation** of the central door locking switch, tracks **A3** and **B1** (switch not pressed).

Replace the central door locking button if necessary.

If the fault is still present, contact the Techline.

AFTER REPAIR	Carry out a fault finding procedure on the system. Clear the stored faults. Deal with any other faults.

GETtheMANUALS.org

ET045	RF SIGNAL RECEIVED

NOTES	There must be no present or stored faults.
	Special note: This status is used for the Unlocking/Locking functions. Hands-free starting. This status is used to check the correct operation of the **UCH** receiving aerial.

If **status ET045** becomes **NO** after pressing one of the buttons on the **card** or on the occurrence of a fault in the tyre pressure monitor system:
Check the condition of the card battery. Replace the battery if necessary.
Test the card, run command **SC011 CHECK CARDS**.
Test the **UCH** receiving aerial, run command **SC026 AERIAL TEST**.
If the fault is still present, contact the Techline.

AFTER REPAIR	Carry out a fault finding procedure on the system. Clear the stored faults. Deal with any other faults.

GETtheMANUALS.org

ET046	ENGINE IMMOBILISER

NOTES	There must be no present or stored faults. **Special note:** Status **ET046 IMMOBILISER** shows the vehicle protection status. so that the engine management computer and the UCH can authorise start-up. Note: If more than 5 failed attempts at authentication are made in succession, the engine management computer will activate protection mode (antiscanning) and will not attempt to authenticate the UCH. Status **ET046 IMMOBILISER** should be **INACTIVE**. Status **ET127 Immobiliser warning light** should be **Off**.

If status **ET046** is **Active** and **ET127** is **On**:

Fault finding for **VSC1**:

Check the battery voltage, refer to parameter **PR001 Battery voltage**.
Test the card, run command **SC011 Check cards**.
Carry out a card programming operation, run **SC010 Card programming**.
Carry out a UCH-CARD READER connection test, run command **SC023 UCH-CARD READER**.
Refer to the interpretation of faults **DF002 Steering column lock** and **DF029 Steering column lock circuit**.

Fault finding for **VSC2**:

Ensure that configuration **CF100 Hands-free starting** is WITH, read configuration **LC032 Hands-free starting**.
Check the battery voltage, refer to parameter **PR001 Battery voltage**.
Test the card, run command **SC011 Check cards**.
Carry out a card programming operation, run **SC010 Card programming**.
Test the aerials, run command **SC026 Aerial test**.
(Carry out a UCH-CARD READER connection test, run command **SC023 UCH-CARD READER**).
Refer to the interpretation of faults **DF002 Steering column lock** and **DF029 Steering column lock circuit**.

AFTER REPAIR	Carry out a fault finding procedure on the system. Clear the stored faults. Deal with any other faults.

GETtheMANUALS.org

ET047	BRAKE PEDAL POSITION

NOTES	There must be no present or stored faults. Switch on the ignition. Status **ET047** should be **PRESSED**, when the brake pedal is depressed.

If status **ET047** is **RELEASED**.
Check the condition of the **F21 (brake switch (10 A)) fuse** in the **Passenger Compartment Relay/Fuse Box**, replace if necessary.
Check the connection and condition of the **brake light switch** connector. Repair if necessary.
Check the **continuity** between **tracks 1** and **2** of the brake switch in the pedal depressed position. If not OK, replace the brake switch.
Check the **continuity and insulation** of the following connections: **UCH P101** white connector (40 tracks), green connection strip **track 26** → **Track 3** of the brake switch connector **Passenger Compartment Relay/Fuse Box** grey connector, black connection strip **track 5** → **Track 26** of the brake switch connector
If the fault is still present, replace the brake switch. If the fault is still present after that, contact the Techline.

AFTER REPAIR	Carry out a fault finding procedure on the system. Clear the stored faults. Deal with any other faults.

GETtheMANUALS.org

ET051	REAR LEFT-HAND DOOR

NOTES	Open the rear left-hand door. Status **ET051 Rear left-hand door** should be OPEN.

If status **ET051** is CLOSED:
Check the connection and condition of the rear left-hand door central door locking connector and repair if necessary.
Check the **continuity** between **tracks C** and **D** of the rear left-hand door central locking connector in the door open position. If not OK, replace the rear left-hand door central door locking.
Check the condition and connection of the **P101 UCH** white connector. Repair if necessary.
Check **the continuity and insulation** of the following connection: **UCH P101** white 40-track connector, brown connection strip **track 15** → **Track C** of the rear left-hand door central locking connector
If the fault is still present, check **intermediate connector R155** on **tracks A9** and **B9**. Repair if necessary.
If the fault is still present, contact Techline.

AFTER REPAIR	Carry out a fault finding procedure on the system. Clear the stored faults. Deal with any other faults.

GETtheMANUALS.org

ET052	REAR RIGHT-HAND DOOR

NOTES	Open the rear right-hand door. Status **ET052 Rear right-hand door** should be OPEN.

If status **ET052** is CLOSED:
Check the connection and condition of the rear right-hand door central door locking connector and repair if necessary.
Check the **continuity** between **tracks C** and **D** of the rear right-hand door central locking connector in the door open position. If not OK, replace the rear right-hand door central door locking.
Check the condition and connection of the **P101 UCH** white connector. Repair if necessary.
Check **the continuity and insulation** of the following connection: **UCH P101** white 40-track connector, brown connection strip **track 7** → **Track C** of the rear right-hand door central locking connector.
If the fault is still present, check **intermediate connector R156** on **tracks C5** and **C6**. Repair if necessary.
If the fault is still present, contact Techline.

AFTER REPAIR	Carry out a fault finding procedure on the system. Clear the stored faults. Deal with any other faults.

GETtheMANUALS.org

ET053	DRIVER'S DOOR

NOTES	Open the driver's door. Status **ET053 Driver's door** should be OPEN.

If status **ET053** is CLOSED:
Check the connection and condition of the driver's door central locking connector and repair if necessary.
Check the **continuity** between **tracks C** and **D** of the driver's door central locking connector in the door open position. If the checks are not OK, replace the driver's door central locking.
Check the condition and connection of the **UCH P101** black connector. Repair if necessary.
Check **the continuity and insulation** of the following connection: **UCH P101** white 40-track connector, brown connection strip **track 16** ⟶ **Track C** of the driver's door central door locking connector
If the fault is still present, check the **R153 intermediate connector track B10**. Repair if necessary.
If the fault is still present, contact Techline.

AFTER REPAIR	Carry out a fault finding procedure on the system. Clear the stored faults. Deal with any other faults.

GETtheMANUALS.org

ET070	START BUTTON

NOTES	Press the start button. Status **ET070** should be **Pressed**.

If status **ET070** is **Released**:
Manipulate the wiring harness between the **UCH** and the **Start button** in order to detect a change in fault status (present ↔ stored). Look for any harness damage and check the condition of the **UCH** black connector and the **Start button** connector. Repair if necessary.
Check the condition of the **F11 (10 A)** fuse in the **Passenger Compartment Relay/Fuse Box**, replace it if necessary.
Check the condition and connection of the UCH **P100** black 40-track connector and the **Start button** connector.
Check the continuity and insulation of the following connections: **UCH P100** black 40-track connector **track 20** → **Track 1** of the **Start button** **Passenger Compartment Relay/Fuse Box** green connector, black connection strip **track 2** → **Track 2** of the **Start button** Repair if necessary.
Replace the Start button.
If the fault is still present, contact the Techline.

AFTER REPAIR	Carry out a fault finding procedure on the system. Clear the stored faults. Deal with any other faults.

GETtheMANUALS.org

ET071	BLANK STEERING COLUMN LOCK

NOTES	There must be no present or stored faults. Status **ET071** should be **NO** after replacement of the lock.

If status **ET071** is **YES**:
Check that the card is **PROGRAMMED**, run command **SC011**. If the card has not been programmed, perform the **SC010 CARD PROGRAMMING** operation.
Check the connections between the **UCH** and the card reader: Carry out test **SC023 UCH - CARD READER CONNECTIONS TEST**.
Check that when depressing the clutch pedal or on the brake pedal or the ON/OFF button that the UCH issues an unlock signal (if the steering is locked).
Check that the **UCH** is coded, check **ET220 UCH programming**. The status is only accessible in the **SC004 UCH programming** scenario command.

AFTER REPAIR	Carry out a fault finding procedure on the system. Clear the stored faults. Deal with any other faults.

GETtheMANUALS.org

ET077	WIPER STALK POSITION

NOTES	Status **ET077** should be **AUTOMATIC, LOW SPEED, HIGH SPEED** or **INACTIVE**.

Switch on the ignition, put the **stalk** in the automatic position.
If status **ET077** becomes **INACTIVE**:

Manipulate the wiring harness between the **wiper stalk** and the **UCH** in order to detect a change in fault status (present ↔ stored).
Look for any harness damage and check the condition of the **UCH** black connector and the **windscreen wiper stalk** connector.
Repair if necessary.

Check the **insulation, continuity and the absence of interference resistance** on the following connections:

UCH P100 black connector, green connection strip **track 24**	→	**Track B2** of the **windscreen wiper stalk** connector
UCH P100 black connector, brown connection strip **track 10**	→	**Track A1** of the **windscreen wiper stalk** connector
Windscreen wiper stalk track B5	→	**Front left-hand earth**

AFTER REPAIR	Carry out a fault finding procedure on the system. Clear the stored faults. Deal with any other faults.

GETtheMANUALS.org

ET077 **CONTINUED 1**	

Switch on the ignition, put the **stalk** in the low speed position.
If status **ET077** becomes **INACTIVE**:

Manipulate the wiring harness between the **wiper stalk** and the **UCH** in order to detect a change in fault status (present ↔ stored).
Look for any harness damage and check the condition of the **UCH** black connector and the **windscreen wiper stalk** connector.
Repair if necessary.

Check the **insulation, continuity and the absence of interference resistance** on the following connections:

UCH black connector, brown connection strip **track 15** → **Track A3** of the **windscreen wiper stalk** connector

Windscreen wiper stalk track B5 → **Front left-hand earth**

AFTER REPAIR	Carry out a fault finding procedure on the system. Clear the stored faults. Deal with any other faults.

GETtheMANUALS.org

ET077 **CONTINUED 2**	

Switch on the ignition, put the **stalk** in the high speed position.
If status **ET077** becomes **INACTIVE**:

Manipulate the wiring harness between the **wiper stalk** and the **UCH** in order to detect a change in fault status (present ↔ stored).
Look for any harness damage and check the condition of the **UCH** black connector and the **windscreen wiper stalk** connector.
Repair if necessary.

Check the **insulation, continuity and the absence of interference resistance** on the following connection:

UCH black connector, brown connection strip **track 25** → **Track A2** of the **windscreen wiper stalk** connector

If the fault is still present, replace the **wiper stalk.**

If the fault is still present, contact the Techline.

AFTER REPAIR	Carry out a fault finding procedure on the system. Clear the stored faults. Deal with any other faults.

GETtheMANUALS.org

ET078 **ET079**	WINDSCREEN WASHER REQUEST REAR SCREEN WASHER REQUEST

NOTES	Switch on the ignition, put the stalk in the windscreen washer position or in the rear screen washer position. Status **ET078** should be **ACTIVE**.

If status **ET078** becomes **INACTIVE**:

Manipulate the wiring harness between the **washer motor** and the **UCH** in order to detect a change in fault status (present ↔ stored).
Look for any harness damage and check the condition of the **UCH** black connector and the **washer motor** connector.
Repair if necessary.

Check the **insulation, continuity and the absence of interference resistance** on the following connections:

UCH black connector, green connection strip **track 25** → **Track B1** of the **washer stalk connector**

UCH black connector, green connection strip **track 35** → **Track A4** of the **washer stalk connector**

If the fault is still present, contact the Techline.

AFTER REPAIR	Carry out a fault finding procedure on the system. Clear the stored faults. Deal with any other faults.

GETtheMANUALS.org

ET089	ELECTRIC CHILD SAFETY BUTTON

NOTES	Switch on the ignition and press the child safety lock button. There should be a signal if the vehicle is configured WITH Child Safety. Status **ET089** should be **ACTIVE**.

If status **ET089** is **DEACTIVATED**:

Refer to the interpretation of fault **DF072 CHILD SAFETY CIRCUIT**.

AFTER REPAIR	Carry out a fault finding procedure on the system. Clear the stored faults. Deal with any other faults.

GETtheMANUALS.org

ET109	REVERSE GEAR ENGAGED

NOTES	Switch on the ignition, engage reverse gear. Status **ET109** should be **YES**.

If status **ET109** becomes **NO**:

Manual gearbox:

Check the condition of the **UCH P100** connector and the condition of the **reversing light sensor**.
Repair if necessary.

Check the **insulation, continuity and the absence of interference resistance** on the following connection:

UCH P100 black connector, brown connection strip **track 7** → **Track 3** of the **reversing light sensor**

If the fault is still present, check the **R262 intermediate connector**.
Repair if necessary.

If the fault is still present, contact the Techline.

AFTER REPAIR	Carry out a fault finding procedure on the system. Clear the stored faults. Deal with any other faults.

GETtheMANUALS.org

ET124 **ET125**	FRONT FOG LIGHTS REAR FOG LIGHTS

NOTES	Switch on the ignition and the front and rear fog lights. Statuses **ET124 and ET125** should be **ON**.

If statuses **ET124 and ET125** become **OFF**:

Refer to the interpretation of faults **DF109 REAR FOG LIGHT(S) CONTROL CIRCUIT** and **DF108 FRONT FOG LIGHTS CONTROL CIRCUIT**.

AFTER REPAIR	Carry out a fault finding procedure on the system. Clear the stored faults. Deal with any other faults.

GETtheMANUALS.org

ET141 **ET196** **ET199** **ET204**	SLIGHT OVER-INFLATION SLIGHT UNDER-INFLATION PUNCTURE WARNING LIGHT ACTIVATED BY THE SYSTEM TYRE PRESSURE MONITOR WARNING LIGHT

NOTES	Switch on the ignition. Signal can be interpreted if the vehicle is configured WITH **Tyre pressure monitor system**. Slightly under-inflate or over-inflate a tyre. Status **ET141** should be **YES**. Status **ET196** should be **YES**.

If statuses **ET141** and **ET196** are **NO**:

Refer to the interpretation of fault **DF052 VALVE SIGNAL RECEIVER**.

Refer to the interpretation of fault **DF006 FRONT LEFT-HAND WHEEL VALVE SENSOR**.
Refer to the interpretation of fault **DF007 FRONT RIGHT-HAND WHEEL VALVE SENSOR**.
Refer to the interpretation of fault **DF008 REAR RIGHT-HAND WHEEL VALVE SENSOR**.
Refer to the interpretation of fault **DF009 REAR LEFT-HAND WHEEL VALVE SENSOR**.

If statuses **ET141** and **ET196** become **NO**:

Test the **tyre pressure monitor** network.
Test the **multiplex network (see 88B multiplexing)**.

AFTER REPAIR	Carry out a fault finding procedure on the system. Clear the stored faults. Deal with any other faults.

GETtheMANUALS.org

ET150 **ET151**	RIGHT-HAND DIRECTION INDICATOR LEFT-HAND DIRECTION INDICATOR

NOTES	Switch on the ignition, operate the left- or right-hand direction indicator. Statuses **ET150 and ET151** should be **ON**.

If statuses **ET150 and ET151** become **OFF**:

Refer to the interpretation of fault **DF110 DIRECTION INDICATORS CONTROL CIRCUIT**.

AFTER REPAIR	Carry out a fault finding procedure on the system. Clear the stored faults. Deal with any other faults.

GETtheMANUALS.org

ET159 **ET160**	REAR LEFT-HAND DOOR CHILD SAFETY LOCK REAR RIGHT-HAND DOOR CHILD SAFETY LOCK

NOTES	Switch on the ignition and press the child safety lock button. There should be a signal if the vehicle is configured WITH Child Safety. Statuses **ET159 and ET160** should be **ACTIVE**.

If statuses **ET159 and ET160** become **INACTIVE**:

Refer to the interpretation of fault **DF072 CHILD SAFETY CIRCUIT**.

AFTER REPAIR	Carry out a fault finding procedure on the system. Clear the stored faults. Deal with any other faults.

GETtheMANUALS.org

ET275	HAZARD WARNING LIGHTS CONTROL

NOTES	With the hazard warning lights on.

Manipulate the wiring harness between the **UCH** and the **hazard warning lights switch** in order to detect a change in fault status (present ↔ stored).
Look for any harness damage and check the condition of the **UCH P100** and **P101** connectors and the condition of the **hazard warning lights switch** connector.
Repair if necessary.

Check for **+ 12 V** between **track 3** of the **hazard warning lights switch** and the **front left-hand earth**.

Check the **continuity and insulation** of the following connections:

UCH P100 black connector (40 tracks), brown connection strip **track 2**	→	**Track 3** of the **hazard warning lights switch** connector.
UCH P101 white connector (40 tracks), green connection strip **track 38**	→	**Track 4** of the **hazard warning lights switch** connector.
Hazard warning lights switch track 2	→	**Front left-hand earth**

Repair if necessary.
If a fault is still present, replace the **hazard warning lights switch**.
If the fault is still present, contact the Techline.

AFTER REPAIR	Carry out a fault finding procedure on the system. Clear the stored faults. Deal with any other faults.

GETtheMANUALS.org

ET283	CAUSE OF STEERING COLUMN LOCK INHIBITION

NOTES	None

If **STATUS4, STATUS5, STATUS6, STATUS7, STATUS8** are present:

Check that the steering column lock is correct for the vehicle.

Check the condition and connection of the **P101** white **UCH** 40-track connector and the steering column lock connector.

Check the **continuity and insulation** of the following connections:

UCH P101 40-track white connector, brown connection strip **track 9**	→	**Track 2 steering column lock** connector
UCH P101 40-track white connector, brown connection strip **track 10**	→	**Track 4 steering column lock** connector
steering column lock connector **track 1**	→	**Vehicle earth**
Diagnostic socket **track 6**	→	**Track 3 steering column lock** connector
Diagnostic socket **track 14**	→	**Track 6 steering column lock** connector

Repair if necessary.

If the fault is still present, replace the steering column lock.

If the fault is still present, contact the Techline.

AFTER REPAIR	Carry out a fault finding procedure on the system. Clear the stored faults. Deal with any other faults.

GETtheMANUALS.org

ET332	TAILGATE LOCK CONTROL

NOTES	Ensure the absence of fault **DF037 Striker panel relay control circuit**; if the fault is present, deal with it. Press the tailgate opening switch.

Check the connection and condition of the UCH **P101** white 40-track connector and the **tailgate lock**.
Check for **+ 12 V (tailgate opening authorisation power feed)** between **track 2** of the **tailgate lock** connector and the **rear left-hand earth**.
Check for **earth** between **track 1** of the **tailgate lock** connector and the **rear left-hand earth**.
Measure the resistance of the **tailgate lock motor** between **tracks 1 and 2**.
Check the insulation, continuity and the absence of interference resistance on the following connection: **UCH P101** white 40-track connector, brown connection strip **track 8** ⟶ **Track 2** of the **tailgate lock** connector Repair if necessary.
If the fault is still present, check the **R355 intermediate connector** on **track 7**. Repair if necessary.
If the fault is still present, replace the **tailgate lock**; if the fault is still present, contact the Techline.

AFTER REPAIR	Carry out a fault finding procedure on the system. Clear the stored faults. Deal with any other faults.

GETtheMANUALS.org

ET332 **CONTINUED**	

Check the connection and condition of the UCH **P101** white 40-track connector and the **tailgate opening switch**.
Check the **continuity** between **tracks 1** and **2** of the **tailgate opening switch**.
Check the connections for insulation, continuity and the absence of interference resistance: **UCH P101** white connector (40 tracks), green connection strip **track 30** → **Track 1** of the **tailgate opening switch** connector Repair if necessary.
If the fault is still present, check the **R355 intermediate connector** on **track 8**. Repair if necessary.
Check for **earth** between **track 2** of the **rear opening switch** connector and the **rear left-hand earth**.
If the fault is still present, replace the **rear opening switch**; if the fault is still present, contact the Techline.

AFTER REPAIR	Carry out a fault finding procedure on the system. Clear the stored faults. Deal with any other faults.

GETtheMANUALS.org

Tool parameter	Diagnostic tool title
PR001	Battery voltage
PR002	External temperature
PR003	Front left-hand wheel pressure
PR004	Front right-hand wheel pressure
PR005	Rear right-hand wheel pressure
PR006	Rear left-hand wheel pressure
PR008	Vehicle speed
PR009	Front wheels low speed recommended pressure
PR010	Rear wheels low speed recommended pressure
PR011	Rear wheels high speed recommended pressure
PR012	Front wheels high speed recommended pressure
PR013	Number of cards programmed
PR029	Front right-hand wheel code (winter set)
PR030	Rear right-hand wheel code (winter set)
PR031	Front left-hand wheel code (winter set)
PR032	Rear left-hand wheel code (winter set)
PR033	Front left-hand wheel code (summer set)
PR034	Front right-hand wheel code (summer set)
PR035	Rear right-hand wheel code (summer set)
PR036	Rear left-hand wheel code (summer set)
PR060	Power assisted steering motor position
PR064	Wiper intermittent speed ring position
PR066	Steering column lock supply

GETtheMANUALS.org

PR002	EXTERNAL TEMPERATURE

NOTES	None

Check the condition and connection of the **multifunction display** connector, repair if necessary.
Check the condition and connection of the **UCH P100** black connector. Repair if necessary.
Check **the continuity and insulation** of the following connection: **UCH P100** black 40-track connector, brown connection strip **track 14** ⟶ **Track 24** of the **multifunction display** connector
If the fault is still present, check the **R369 intermediate connector** on **track 14**. Repair if necessary.
If the fault is still present, contact Techline.

AFTER REPAIR	Carry out a fault finding procedure on the system. Clear the stored faults. Deal with any other faults.

GETtheMANUALS.org

PR013	NUMBER OF CARDS PROGRAMMED

NOTES	None

Check the condition and connection of the **multifunction display** connector, repair if necessary.
Check the condition and connection of the **UCH P100** black connector. Repair if necessary.
Check **the continuity and insulation** of the following connection: **UCH P100** black connector, brown connection strip **track 14** ⟶ **Track 24** of the **multifunction display** connector
If the fault is still present, check the **R369 intermediate connector** on **track 14**. Repair if necessary.
If the fault is still present, contact Techline.

AFTER REPAIR	Carry out a fault finding procedure on the system. Clear the stored faults. Deal with any other faults.

GETtheMANUALS.org

Tool command	Diagnostic tool title
RZ001	Fault memory
RZ002	After changing a tyre
VP004	Enter VIN
VP005	Entering recommended pressures
VP007	Wheel set selection
AC002	Locking/unlocking opening elements
AC007	Rear screen wiper
AC008	Front fog lights
AC009	Rear fog lights
AC013	Audible warning
AC020	Central door locking button indicator light
AC021	Interior lights
AC022	Left-hand direction indicator
AC023	Right-hand direction indicator
AC030	Headlight washers relay 1
AC035	Deadlocking
AC043	+ 12 V after ignition feed relay
AC044	+ 12 V accessories feed relay
AC047	OK to start indicator light
AC048	Engine running indicator light
AC052	Hazard warning lights indicator light
AC053	Deadlocking
AC054	Dipped headlights
AC055	Side lights
AC061	Tailgate opening
AC062	Main beam headlights
AC076	Child safety lock indicator light
AC077	Power assisted steering motor test
SC011	Check cards
SC023	UCH → card reader connections test
SC026	Aerial test

GETtheMANUALS.org

VP004	VIN ENTRY

NOTES	Perform this configuration after replacing the computer.

Establish dialogue with the **UCH**. Select the **Command mode** menu. Select the **Parameters** menu. Select line **VP** Write VIN. Confirm the steps described in the scenario. End of procedure.
The VIN is reread in the identification screen: ID019.

AFTER REPAIR	Carry out a fault finding procedure on the system. Clear the stored faults. Deal with any other faults.

GETtheMANUALS.org

VP005	ENTERING RECOMMENDED PRESSURES

NOTES	**Special notes:** To write the recommended pressures correctly, it is essential to have the manufacturer's recommended pressures (Workshop Repair Manual or driver's handbook **for the vehicle concerned**).

Under the general menu, select command mode and then click on the parameter button and enter: **VP005**.
Save the Workshop Repair Manual values and confirm.
Check that the recommended pressures have been correctly stored in the Parameters menu: In the fault finding mode menu, select the **Read statuses and parameters icon then select Tyre management** from the sub functions.
If there is a fault, repeat the operation from the beginning.

The pressure entry reread operation is performed in the sub-function screen, tyre management: **PR009, PR010, PR011, PR012**.

AFTER REPAIR	Carry out a fault finding procedure on the system. Clear the stored faults. Deal with any other faults.

GETtheMANUALS.org

VP007	WHEEL SET SELECTION

NOTES	**Special notes:** In the general menu, click on the **status list** sub-menu, check the type of wheel set stored by displaying status **ET001 Set of valves recognised**. If the selected wheel set is incorrect, follow the procedure below:

Under the general menu, select **command mode**, then click the parameter button and enter selection **VP004**.
Save the Workshop Repair Manual values and confirm.
Check that the **recognised valve set** has been properly stored:
In the fault finding mode menu, select the **Read statuses and parameters icon then select Tyre management** from the sub functions.

AFTER REPAIR	Carry out a fault finding procedure on the system. Clear the stored faults. Deal with any other faults.

GETtheMANUALS.org

AC013	WARNING BUZZER

NOTES	Switch on the ignition. IMPORTANT: only use this command on vehicles fitted with the hands-free function. It allows you to test the connection between the UCH and the electronic audible warning.

Check the insulation and continuity of the following connection:

Audible warning **track 3** ⟶ **Track 22** UCH **P101** 40-track white connector

Check the audible warning's power supply (**track 1**) and earth connection (**track 2**).
Repair if necessary.

Replace the audible warning.

If the fault is still present, contact the Techline.

AFTER REPAIR	Carry out a fault finding procedure on the system. Clear the stored faults. Deal with any other faults.

GETtheMANUALS.org

AC030	HEADLIGHT WASHER RELAY

NOTES	Switch on the ignition. This command tests the connection between the **UCH** and the headlight washer.

Check the **resistance of the headlight washer relay** between tracks **D1** and **D2** of the **Passenger Compartment Relay/Fuse Box (with connector disconnected)**.

Check the insulation from the + 12 V feed of the following connection:

UCH P101 white connector (40-track), green connection strip **track 40** → **Track D2** of the **passenger compartment fuse and relay box**

Repair if necessary.

If the fault is still present, replace the relay.

If the fault is still present, contact the Techline.

AFTER REPAIR	Carry out a fault finding procedure on the system. Clear the stored faults. Deal with any other faults.

GETtheMANUALS.org

AC043	+ 12 V AFTER IGNITION FEED RELAY

NOTES	Ignition off.

The **+ 12 V after ignition feed** relay is switched for **1 second**.

Check the condition and position of the **RL22** relay and replace it if necessary.

Test the relay. Replace the relay if necessary.

If the fault is still present, contact the Techline.

AFTER REPAIR	Carry out a fault finding procedure on the system. Clear the stored faults. Deal with any other faults.

GETtheMANUALS.org

AC044	+ 12 V ACCESSORIES FEED RELAY

NOTES	Remove the card from the reader.

The **+ 12 V accessories feed** relays are switched for **1 second**.

Check the condition and the position of the **RL18** and **RL19 accessories relays** (in the Passenger Compartment Relay/Fuse Box), replace them if necessary.

Test the relay.
Replace the relay if necessary.

If the fault is still present, contact the Techline.

AFTER REPAIR	Carry out a fault finding procedure on the system. Clear the stored faults. Deal with any other faults.

GETtheMANUALS.org

AC047	OK TO START INDICATOR LIGHT

NOTES	Check that the side lights are off. Switch on the ignition. The 'OK to start' indicator light only comes on when the brake or clutch pedal is depressed.

'OK to start' indicated on engine Start/Stop button when the ignition is switched on.
Run the command if the light is not on.
If the indicator light does not light up, check the insulation and continuity of the following connection:

Start/Stop button **track 3** ⟶ **track 11** UCH black 40-track connector **P100**

Check the **+ 12 V AVC** button supply on **track 2**.

Replace the engine Start/Stop button.

If the fault is still present, contact the Techline.

AFTER REPAIR	Carry out a fault finding procedure on the system. Clear the stored faults. Deal with any other faults.

GETtheMANUALS.org

AC048	ENGINE RUNNING INDICATOR LIGHT

NOTES	Check that the side lights are off. Switch on the ignition.

'OK to start' indicated on engine Start/Stop button when the ignition is switched on.
Run the command if the indicator light is not lit.
If the indicator light does not light up, check the insulation and continuity of the following connection:

Start/Stop button **track 4** ⟶ **track 3** UCH black 40-track **P100** connector

Check the **+ 12 V AVC** button supply on **track 2**.

Replace the engine Start/Stop button.

If the fault is still present, contact the Techline.

AFTER REPAIR	Carry out a fault finding procedure on the system. Clear the stored faults. Deal with any other faults.

GETtheMANUALS.org

SC011	CARD CHECK

NOTES	**Special note:** Apply this procedure if difficulties occur when reading the card and opening the doors.

Procedure:
Insert the card in the reader.
Establish dialogue with the **UCH**.
Select the **Command mode** menu.
Select the **Specific command** menu.
Select line **SC011 Check cards**.
Confirm the steps described in the scenario.
End of procedure.
Status **ET135 CARD CODE VALID** should be **YES**.

AFTER REPAIR	Carry out a fault finding procedure on the system. Clear the stored faults. Deal with any other faults.

GETtheMANUALS.org

SC012	HANDS-FREE SYSTEM TEST

NOTES	Run this command to: – Test the RF signal between the card and the card reader. – Test the card battery.

Establish dialogue with the **UCH**.
Select the **Command mode** menu.
Select the **Specific command** menu.
Select line **SC012 Hands-free system test**.
Confirm the steps described in the scenario.
End of procedure.
In the event of a fault, perform the following checks (see the section dealing with command modes):
– **SC011 Check cards.**
– **SC023 UCH-card reader connection test.**
– **SC026 Aerial test.**

AFTER REPAIR	Carry out a fault finding procedure on the system. Clear the stored faults. Deal with any other faults.

GETtheMANUALS.org

SC023	UCH - CARD READER CONNECTIONS TEST

NOTES	There must be no present or stored faults. Apply this procedure if difficulties occur when reading the card.

Procedure:
Establish dialogue with the **UCH**.
Select the **Command mode** menu.
Select the **Specific command** menu.
Select line **SC023 UCH - card reader connection test**.
Confirm the steps described in the scenario.
End of procedure.
The result of the command should be: **Connections correct** or **Connections faulty**.

Connections faulty:

Check the condition and connection of the black **P100** 40-track connector of the **UCH** and the card reader connector.

Check the insulation, continuity and the absence of interference resistance on the following connections:

UCH black connector brown connection strip **P100** (40 tracks) **track 6** → **track 1** card reader

UCH black connector (40 tracks), **P100** brown connection strip **track 19** → **track 4** card reader

Check for earth on **track 8** of the card reader switch.
Check for **+ battery feed** on **track 2** of the card reader switch.
Repair if necessary.

If the fault is still present, replace the card reader.

AFTER REPAIR	Carry out a fault finding procedure on the system. Clear the stored faults. Deal with any other faults.

GETtheMANUALS.org

SC026	AERIAL TEST

NOTES	Apply this procedure if difficulties occur when opening the doors.

Procedure:
With ignition off.
Using the diagnostic tool.
From the general menu, select the **Command mode** sub-menu then **specific command**.
Perform command **SC023 Aerial test**.
The result of the command is:
Good or **Poor**

If the result of commands is **ET225 Roof aerial, ET405 Tailgate aerial, ET406 Instrument panel aerial, ET226 Centre console aerial**:
Good for each aerial:
Press the three buttons on the card for **10 seconds**.
The card indicator light starts flashing quickly when the card switches to test mode.
The indicator light on the card lights up every time a signal is received from the vehicle.
Walk around the vehicle, moving away from it and coming back to find the area covered.
Press the three buttons to exit test mode.
Note:
If test mode is not deactivated, the card battery will run down quickly.

If one of these statuses **ET225 Roof aerial, ET405 Tailgate aerial, ET406 Instrument panel aerial, ET226 Centre console aerial** shows **Not OK**:
There is an open circuit on the aerial associated with the status.
Disconnect the faulty aerial and carry out a continuity check on the aerial.
Note:
The tailgate aerial and instrument panel aerial are fitted in parallel.

AFTER REPAIR	Carry out a fault finding procedure on the system. Clear the stored faults. Deal with any other faults.

GETtheMANUALS.org

NOTES	Carry out a fault finding procedure on the passenger compartment connection unit.

NO DIALOGUE WITH THE UCH	**ALP 1**
NO DIRECTION INDICATORS WORKING	**ALP 2**
CHECK TYRE PRESSURE WARNING LIGHT OR SIGNAL	**ALP 3**
PRESSURE NOT MONITORED WARNING LIGHT OR SIGNAL (INTERMITTENT WARNING)	**ALP 4**
PRESSURE NOT MONITORED WARNING LIGHT OR SIGNAL (CONTINUOUS WARNING)	**ALP 5**

GETtheMANUALS.org

ALP 1	No communication with the UCH

NOTES	Switch on the ignition. Ensure that the diagnostic tool is able to communicate with the vehicle.

Check the condition of the fuses, earths and **+ 12 V feed** to the Passenger Compartment Relay/Fuse Box.

Check for **insulation and the absence of interference resistance** on the following connections:

UCH black **P100** connector (40-track), brown connection strip **track 13** → **Track 7 diagnostic socket**

UCH white **P101** connector (40-track), brown connection strip **track 1** → **Track 14 diagnostic socket**

UCH white **P101** connector (40-track), brown connection strip **track 11** → **Track 6 diagnostic socket**

Repair if necessary.

If the fault is still present, contact Techline.

AFTER REPAIR	Remember to reposition the shunts if the Passenger Compartment Relay/Fuse Box is replaced.

GETtheMANUALS.org

ALP 2	No direction indicators are working

NOTES	First carry out a function fault finding check. Switch on the ignition.

Press the hazard warning lights switch.
Check that the hazard warning lights switch status is active.
If not refer to the section on dealing with this status.

Replace the passenger compartment fuse and relay box.

AFTER REPAIR	Remember to reposition the shunts if the Passenger Compartment Relay/Fuse Box is replaced.

GETtheMANUALS.org

ALP 3	Check tyre pressure warning light or signal

Force the four sensors to transmit using the valve exciter (without reprogramming) and check whether the message on the instrument panel and the pressure check warning lights are cleared.
Make sure that the recommended pressures read in parameters **PR009 to PR012** match the recommended pressures indicated on the door or in the driver's handbook for the vehicle. Otherwise, run command **VP005 Enter recommended pressures** (see **Processing command modes**). Force the valves to transmit (without reprogramming).
If there is a puncture warning on the instrument panel after readjusting the pressure, the sensor may not have detected the readjustment. In this case, deflate the tyre concerned by at least **300 mbar** and force the valve to transmit using the exciter. Then readjust the pressure and force the valve to transmit again using the exciter. Switch the ignition off and then on again.
If the instrument panel warning occurred while the vehicle was being started or after it had been parked in severe weather conditions (under the midsummer sun or outside in intense cold), switch off the ignition for **1 hour 45 minutes** then switch it back on or program the four valve codes in accordance with procedure **SC002 Programming the 4 valve codes**.
If the Check pressure message is still there after these steps, replace the malfunctioning sensor(s). Then reprogram the valve codes from the beginning. Send in the sensor(s) with a completed tyre pressure monitor operation fault finding log.
If the message is still present, contact the Techline.

GETtheMANUALS.org

ALP 4	Pressure not monitored warning light or signal (Intermittent warning)

Check:
- the underbody receiver connector.
- the UCH connector.
- the wiring harness connecting the UCH and underbody receiver.
- the rear left-hand wheel arch connection.

Carry out the necessary repairs.

If there are no faults on the connections or wiring harness, replace the underbody receiver.

After changing the underbody receiver, excite the sensors using the valve exciter and check that statuses **ET200 to ET203 WHEEL SIGNAL** change to **STATUS1**: forced transmission.

Send the receiver to the Parts Return Department with a completed fault finding log.

If these checks do not help, the warning is present. See **ALP 5 Pressure not monitored, continuous warning.**

GETtheMANUALS.org

ALP 5	Pressure not monitored warning light or signal (Continuous warning)

One or more wheel warning lights on the instrument panel display disappear

Remove the tyre from the wheel missing on the instrument panel. Make sure the sensor is fitted the right way round.
If it is fitted the right way round, replace it and program the code for the new sensor. Send the sensor to the Parts Return Department with a completed tyre pressure monitor fault finding log.
If it is fitted the wrong way round, put it right and carry out a road test for at least **5 minutes** at a speed greater than **18 mph (30 km/h)**.
If the wheel warning light does not reappear, contact the Techline and send the sensor to the Parts Return Department with a completed Tyre Pressure Monitor fault finding log.

GETtheMANUALS.org

VEL SATIS

8 Electrical equipment

87F PARKING DISTANCE CONTROL

Vdiag No: 04-08

Fault finding - Introduction	87F - 2
Fault finding - System operation	87F - 7
Fault finding - Allocation of computer tracks	87F - 8
Fault finding - Replacement of components	87F - 10
Fault finding - Configurations and programming	87F - 11
Fault finding - Fault summary table	87F - 12
Fault finding - Interpretation of faults	87F - 13
Fault finding - Conformity check	87F - 28
Fault finding - Status summary table	87F - 30
Fault finding - Interpretation of statuses	87F - 31
Fault finding - Parameter summary table	87F - 39
Fault finding - Interpretation of parameters	87F - 40
Fault finding - Customer complaints	87F - 42
Fault finding - Fault Finding Chart	87F - 43

V3 **Edition Anglaise**

"The repair procedures given by the manufacturer in this document are based on the technical specifications current when it was prepared.

The procedures may be modified as a result of changes introduced by the manufacturer in the production of the various component units and accessories from which his vehicles are constructed."

All rights reserved by Renault s.a.s.

Copying or translating, in part or in full, of this document or use of the service part reference numbering system is forbidden without the prior written authority of Renault s.a.s.

© Renault s.a.s.

GETtheMANUALS.org

1. SCOPE OF THIS DOCUMENT

This document presents the fault finding procedure applicable to all computers with the following specifications:

Vehicle(s):	**CLIO III, Laguna II ph 1 and 2** **Vel-Satis ph1 and 2,** **Espace IV ph1 and 2,** **Mégane II, Scénic II, Modus ph2**

Computer name: **Parking distance control**
Vdiag No: 04-08

2. PREREQUISITES FOR FAULT FINDING

Documentation type

Fault finding procedures (this manual):
– Assisted fault finding (integrated into the **diagnostic tool**), Dialogys.
Wiring Diagrams:
– Visu-Schéma (CD-ROM), paper.

Type of diagnostic tools

– CLIP + multiplex line sensor

Special tooling required

Special tooling required	
	Multimeter
Elé. 1681	Universal bornier

3. RECAP

To run fault finding on the vehicle computers, switch on the ignition.

Depending on the type of vehicle equipment, proceed as follows:

For vehicles with radio frequency remote control/key, switch on the ignition with the key.
For vehicles with a Renault card, with the vehicle card in the card reader, press and hold start button (longer than **5 seconds**) with start-up conditions not fulfilled, connect the diagnostic tool and perform the required operations.

To cut off the + after ignition feed, proceed as follows:

For vehicles with key/radiofrequency remote control, use the key to switch off the ignition.
For vehicles with a Renault card, press the Start button twice briefly (less than **3 seconds**), ensure that the + after ignition feed has been cut off by checking that the computer indicator lights on the instrument panel have gone out.

GETtheMANUALS.org

Faults

Faults are declared as either present or stored (depending on whether they appeared in a certain context and have disappeared since, or whether they remain present but have not been diagnosed within the current context).

The **present** or **stored** status of faults should be taken into consideration when the **diagnostic tool** is used following the + after ignition supply being switched on (without operating the system components).

For a **present fault**, apply the procedure described in the **Interpretation of faults** section.

For a **stored fault**, note the faults displayed and apply the instructions in the **Notes** section.

If the fault is **confirmed** when the instructions in the Notes section are applied, the fault is present. Deal with the fault

If the fault is **not confirmed**, check:
- the electrical lines which correspond to the fault,
- the connectors for these lines (for oxidation, bent pins, etc.),
- the resistance of the component detected as faulty,
- the condition of the wires (melted or split insulation, wear).

Conformity check

The aim of the conformity check is to check data that does not produce a fault on the **diagnostic tool** because the data is inconsistent. Therefore, this stage is used to:
- carry out fault finding on faults that do not have a fault display, and which may correspond to a customer complaint.
- check that the system is operating correctly and that there is no risk of a fault recurring after repairs.

This section gives the fault finding procedures for statuses and parameters and the conditions for checking them.

If a status is not behaving normally or a parameter is outside the permitted tolerance values, consult the corresponding fault finding page.

Customer complaints - Fault finding chart

If the test with the diagnostic tool is OK but the customer complaint is still present, the fault should be processed by **customer complaint**.

A synopsis of the general procedure to follow is provided on the following page in the form of a flow chart.

GETtheMANUALS.org

4. FAULT FINDING PROCEDURE

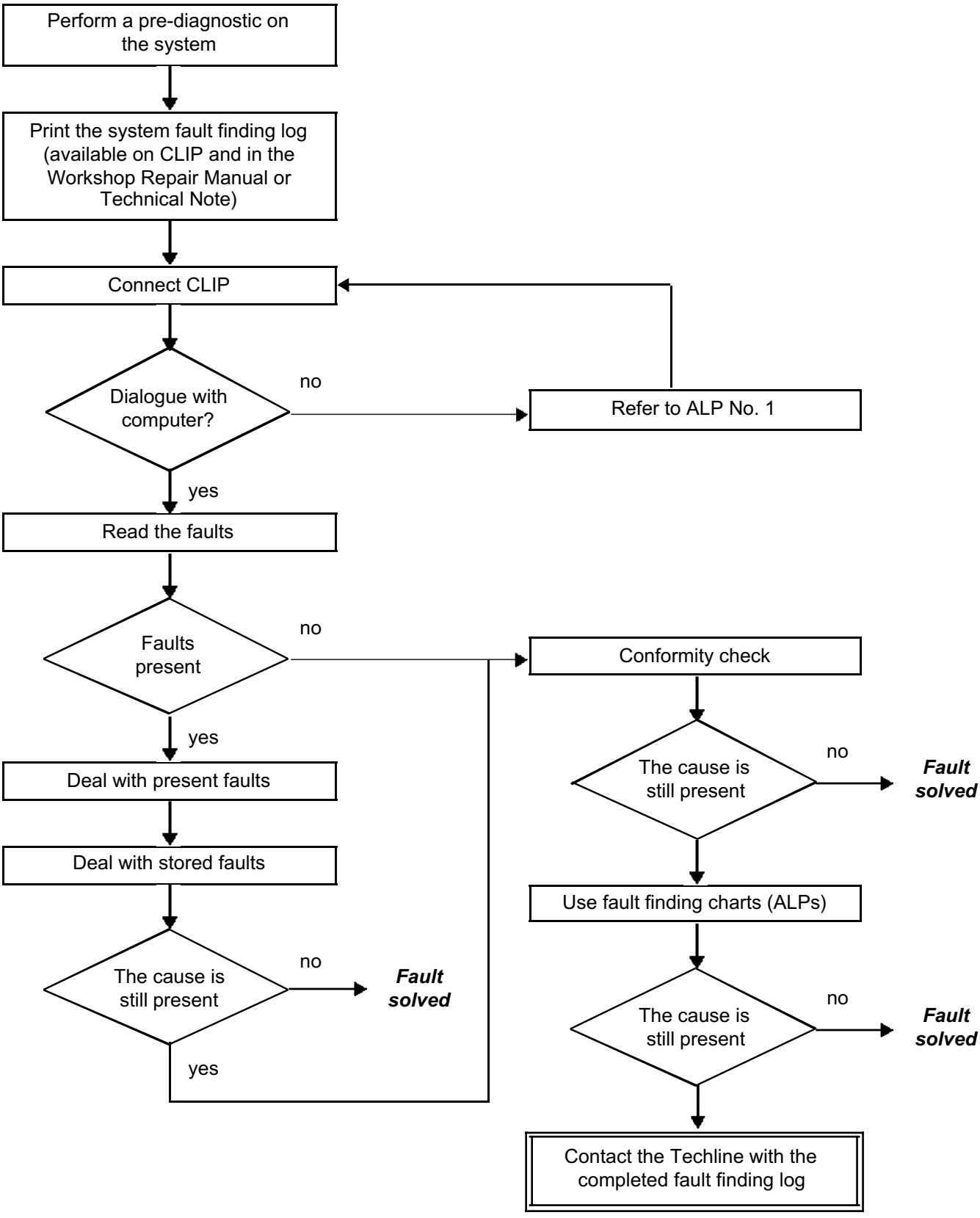

GETtheMANUALS.org

4. FAULT FINDING PROCEDURE (continued)

Wiring check

Fault finding problems
Disconnecting the connectors and/or manipulating the wiring harness may temporarily remove the cause of a fault.
Electrical measurements of voltage, resistance and insulation are generally correct, especially if the fault is not present when the analysis is made (stored fault).

Visual inspection
Look for damage under the bonnet and in the passenger compartment.
Carefully check the fuses, insulators and wiring harness routing.
Look for signs of oxidation.

Tactile inspection
While manipulating the wiring harness, use the **diagnostic tool** to note any change in fault status from stored to present.
Make sure that the connectors are properly locked.
Apply light pressure to the connectors.
Twist the wiring harness.
If there is a change in status, try to locate the source of the fault.

Inspection of each component
Disconnect the connectors and check the appearance of the clips and tabs, as well as the crimping (no crimping on the insulating section).
Make sure that the clips and tabs are properly locked in the sockets.
Check that no clips or tabs have been dislodged during connection.
Check the clip contact pressure using an appropriate model of tab.

Resistance check
Check the continuity of entire lines, then section by section.
Look for a short circuit to earth, to **+ 12 V** or to another wire.

If a fault is detected, repair or replace the wiring harness.

GETtheMANUALS.org

5. FAULT FINDING LOG

IMPORTANT

IMPORTANT
Any fault on a complex system requires thorough fault finding with the appropriate tools. The FAULT FINDING LOG, which should be completed during the procedure, enables you to keep track of the procedure which is carried out. It is an essential document when consulting the manufacturer.

IT IS THEREFORE ESSENTIAL THAT THE FAULT FINDING LOG IS FILLED OUT EVERY TIME IT IS REQUESTED BY TECHLINE OR THE WARRANT RETURNS DEPARTMENT.

You will always be asked for this log:

- when requesting technical assistance from Techline,
- for approval requests when replacing parts for which approval is mandatory,
- to be attached to monitored parts for which reimbursement is requested. The log is needed for warranty reimbursement, and enables better analysis of the parts removed.

6. SAFETY ADVICE

Safety rules must be observed during any work on a component to prevent any damage or injury:

– check the battery voltage to avoid incorrect operation of computer functions,
– use the appropriate tools,
– do not touch the xenon bulbs, and do not work on the COSLAD system when it is in operation, as the voltage can be above 20,000 V.

GETtheMANUALS.org

Description of operation

The system consists of four sensors built into the rear bumper, a computer and a buzzer.
The system assists the driver during parking manoeuvres by warning of any obstacles to the rear of the vehicle.
– The sensors and the computer calculate the distance between the vehicle and any obstacles. The sensors operate over a distance range from **20 - 30 cm minimum to 150 cm maximum**.
– The driver is informed of the distances by a **buzzer**.
– The system only works when the vehicle **is in reverse gear**. Activation is indicated by a **brief 0.5 second activation sound**.

The buzzer is activated when the vehicle is **150 cm** from the obstacle. As the distance diminishes, the frequency of the buzzer increases. When the distance reaches **20 - 30 cm**, the buzzer becomes continuous.
– The system can only be **activated** in **+ after ignition feed**.

DEACTIVATING THE SYSTEM:

– The parking distance control can be deactivated in two ways:
– **Temporary deactivation:** briefly **pressing** (**1 second**) the parking distance control switch on the dashboard deactivates the system (the red warning light on the switch comes on). The function can be switched on again by pressing **briefly** for a second time (the red indicator light on the switch goes out) or by switching the ignition off and back on.
– **Permanent deactivation:** the parking distance control system can be deactivated **for a longer period** by **pressing and holding** (for approximately **3 seconds**) the parking distance control switch on the dashboard (the red warning light on the switch comes on). The function can be switched on again only by **pressing and holding** the switch again (the red warning light on the switch goes out).

Note:
Using the **diagnostic tool** statuses, it is possible to find out the function status (ready, detecting, suspended or disabled) by using status **ET003 Parking distance control function** (see **conformity check** or **the relevant status interpretation**).

Fault finding:
A low pitched, 5-second continuous warning sound upon switching on the ignition informs the driver that a system fault has occurred.

GETtheMANUALS.org

Computer with 1 connector (Clio III, Laguna II ph1 and 2, Vel Satis ph1 and 2 Espace IV ph 1 and 2 Mégane II, Scénic II, Modus ph2):

Track	Description
1	+ 12 V after ignition feed
2	+ 12 V buzzer
3	Computer earth
4	Reverse gear signal (+ 12 V)
5	Warning light control
6	Buzzer earth
7	Not used
8	Diagnostic line K
9	+ 12 V rear sensors
10	Rear sensors earth
11	Not used
12	Parking distance control On/Off switch signal
13	Right-hand inner sensor signal
14	Left-hand inner sensor signal
15	Left-hand outer sensor signal
16	Right-hand outer sensor signal

Note:
For Scénic II, the computer and buzzer are located on the left-hand side of the luggage compartment behind the interior trim.

GETtheMANUALS.org

Computer with 2 connectors (Laguna II ph1, Vel Satis ph1, Espace IV ph1):

12-TRACK CONNECTOR

Track	Description
1	Not used
2	Right-hand inner sensor signal
3	Left-hand inner sensor signal
4	Right-hand outer sensor signal
5	Left-hand outer sensor signal
6	Not used
7	Not used
8	Rear sensors earth
9	Not used
10	Not used
11	+ 12 V rear sensors
12	Not used

16-TRACK CONNECTOR

Track	Description
1	+ 12 V after ignition
2	Buzzer earth
3	Not used
4	Parking distance control On/Off switch signal
5	Not used
6	Reverse gear signal (+ 12 V)
7	Not used
8	Computer earth
9	Not used
10	+ 12 V buzzer
11	Not used
12	Diagnostic line K
13	Warning light control
14	Not used
15	Not used
16	Not used

GETtheMANUALS.org

REPLACING THE PARKING DISTANCE CONTROL COMPUTER

BEFORE REPLACING ANY COMPUTER IT IS ESSENTIAL THAT YOU CONTACT TECHLINE.

When replacing the computer, apply the following procedure:
– switch off the ignition,
– replace the parking distance control computer (see **MR 392, 385, 405, 395, 364, 370 or 470 mechanical systems 87F parking distance control, parking distance control computer: Removal - Refitting**),
– configure the vehicle identification using command **CF005 Vehicle identification** (refer to **Configurations and Programming**),
– configure the volume of the buzzer and adjust the pitch using commands **CF001 Buzzer volume** and **CF006 Adjusting the pitch** (refer to **Configurations and Programming**),
– enter the VIN using command **VP001 Enter VIN**,
– check that the system is operating correctly and make sure that there are no faults.

GETtheMANUALS.org

CONFIGURATION AFTER REPLACING THE COMPUTER

After replacing the computer, configure the parking distance control computer with the vehicle type using configuration **CF005 Vehicle identification** (repair mode menu, diagnostic tool configuration function). The configuration adapts the sensors' detection field to the type of body.
Depending on a vehicle's gearbox type (automatic or manual), the parking distance control can be delayed from working. Activation of the parking distance control is indicated by a **brief 0.5 second activation sound** (vehicle in reverse gear). On vehicles with an automatic transmission, the **3-second** delay prevents the activation noise from sounding every time the driver shifts from Park to Drive.

After having configured the computer, check that the configuration has taken effect by reading the configuration **LC005 Vehicle identification**.

Special note (Vdiag 08 only):
If a vehicle is fitted with a caravan towbar and if there is a continuous beeping noise, take the towbar out of the detection field for the rear sensors, run the command for parameter **VP003 Caravan towbar distance**, then increase the detection area centimetre by centimetre. To avoid impairing the detection, the parameter **PR026 Caravan towbar distance** must not exceed **40 cm**.

SETTING OPTIONS

The volume and the tone of the buzzer can be changed if the customer desires.
Configuration **CF001 Buzzer volume** is used to adjust the **volume** of the buzzer.

Configuration function **CF006 Pitch adjustment** is used to adjust the **pitch** of the buzzer.

After configuring the computer, check that the configurations have been registered correctly using configuration readings **LC001 Buzzer volume** and **LC006 Tone adjustment**.

GETtheMANUALS.org

Summary of sensors and actuators on which fault finding can be performed by the parking distance control computer (with corresponding Design Office codes)

Tool fault	Associated DTC	Diagnostic tool title
DF002	**9001**	Left-hand outer sensor
DF003	**9002**	Left-hand inner sensor
DF004	**9004**	Right-hand outer sensor
DF005	**9003**	Right-hand inner sensor
DF006	**9006**	Buzzer
DF007	**9007**	Sensor feed voltage
DF008	**9005**	Computer fault
DF012	**9009**	Parking distance control switch indicator light

GETtheMANUALS.org

DF002 PRESENT OR STORED	LEFT-HAND OUTER SENSOR CC.1 : Short circuit to + 12 V CO.0 : Open circuit or short circuit to earth 1.DEF: Internal electronic fault

NOTES	**Conditions for applying the fault finding procedure to stored faults:** The fault is declared present following selection of reverse gear if the parking distance control function is **ACTIVE (READY)**: the parking distance control warning light is not lit, see the interpretation of status **ET003 Parking distance control function**.
	Special notes: This fault is indicated by the buzzer (a **5 second** warning sound) and the system shuts down.

If a combination of faults are present on the sensors:
Check the connection and condition of the intermediate connectors (the sensors up to the computer). Repair if necessary.
Check for **+ 12 V**, after ignition, between **tracks 1 and 3** of all the sensors.
Computer with 1 connector:
Check the **insulation, continuity and the absence of interference resistance** of the supply for each sensor (between **Tracks 1 and 3**) and for the computer (between **tracks 9 and 10**).
Computer with 2 connectors:
Check the **insulation, continuity and absence of interference resistance** of the supply between **tracks 1 and 3** for each sensor and between **tracks 8 and 11** of the computer **12-track** connector.

In the case where only one sensor is faulty:
Swap the defective sensor with a non-defective sensor.
Check for faults:

If the sensor is no longer faulty, replace the defective sensor.

If the fault is still present, **with the ignition off,** disconnect the parking distance control computer connector to check **the insulation, continuity and the absence of interference resistance** on the following connections:
1 connector:

Parking distance control computer	→	Left-hand outer sensor
Track 9	→	**Track 1**
Track 15	→	**Track 2**
Track 10	→	**Track 3**

Repair if necessary (see **Technical Note 6015A, Repairing electrical wiring, Wiring: Precautions for repair**), repair the wiring, otherwise replace the wiring.

AFTER REPAIR	Clear the stored faults. Follow the instructions to confirm repair. Deal with any faults.

GETtheMANUALS.org

DF002 (CONTINUED)	

2 connectors:

12-track parking distance control computer connector		Left-hand outer sensor
Track 11	→	**Track 1**
Track 5	→	**Track 2**
Track 8	→	**Track 3**

Repair if necessary (see **Technical Note 6015A, Repairing electrical wiring, Wiring: Precautions for repair**), repair the wiring, otherwise replace the wiring.

If the fault is still present, contact the Techline.

AFTER REPAIR	Clear the stored faults. Follow the instructions to confirm repair. Deal with any faults.

GETtheMANUALS.org

DF003 PRESENT OR STORED	LEFT-HAND INNER SENSOR CC.1 : Short circuit to + 12 V CO.0 : Open circuit or short circuit to earth 1.DEF: Internal electronic fault

NOTES	**Conditions for applying the fault finding procedure to stored faults:** The fault is declared present following selection of reverse gear if the parking distance control function is **ACTIVE (READY)**: the parking distance control warning light is not lit, see the interpretation of status **ET003 Parking distance control function**.
	Special notes: This fault is indicated by the buzzer (a **5 second** warning sound) and the system shuts down.

When dealing with a combination of faults on the sensors:
Check the connection and the status of the intermediate connectors (the sensors up to the computer). Repair if necessary.
Check for **+ 12 V**, after ignition, between **Tracks 1 and 3** of all the sensors.
Computer with 1 connector:
Check the **insulation, continuity and the absence of interference resistance** of the supply for each sensor (between **Tracks 1 and 3**) and for the computer (between **tracks 9 and 10**).
Computer with 2 connectors:
Check the **insulation, continuity and absence of interference resistance** of the supply between **tracks 1 and 3** for each sensor and between **tracks 8 and 11** of the computer **12-track** connector.

In the case where only one sensor is faulty:
Swap the defective sensor with a non-defective sensor.
Check for faults:

If the sensor is no longer faulty, replace the defective sensor.

If the fault is still present, **with the ignition off**, disconnect the parking distance control computer connector to check **the insulation, continuity and the absence of interference resistance** on the following connections:
1 connector:

Parking distance control computer		Left-hand inner sensor
Track 9	→	**Track 1**
Track 14	→	**Track 2**
Track 10	→	**Track 3**

Repair if necessary (see **Technical Note 6015A, Repairing electrical wiring, Wiring: Precautions for repair**), repair the wiring, otherwise replace the wiring.

AFTER REPAIR	Clear the stored faults. Follow the instructions to confirm repair. Deal with any faults.

GETtheMANUALS.org

DF003 (CONTINUED)	

2 connectors:

12-track parking distance control computer connector		Left-hand inner sensor
Track 11	→	**Track 1**
Track 3	→	**Track 2**
Track 8	→	**Track 3**

Repair if necessary (see **Technical Note 6015A, Repairing electrical wiring, Wiring: Precautions for repair**), repair the wiring, otherwise replace the wiring.

If the fault is still present, contact the Techline.

AFTER REPAIR	Clear the stored faults. Follow the instructions to confirm repair. Deal with any faults.

GETtheMANUALS.org

DF004 PRESENT OR STORED	RIGHT-HAND OUTER SENSOR CC.1 : Short circuit to + 12 V CO.0 : Open circuit or short circuit to earth 1.DEF: Internal electronic fault

NOTES	**Conditions for applying the fault finding procedure to stored faults:** The fault is declared present following selection of reverse gear if the parking distance control function is **ACTIVE (ready)**: the parking distance control warning light is not lit, see the interpretation of status **ET003 Parking distance control function**.
	Special notes: This fault is indicated by the buzzer (a **5 second** warning sound) and the system shuts down.

When dealing with a combination of faults on the sensors:
Check the connection and the status of the intermediate connectors (the sensors up to the computer). Repair if necessary.
Check for **+ 12 V**, after ignition, between **tracks 1 and 3** of all the sensors.
Computer with 1 connector:
Check the **insulation, continuity and the absence of interference resistance** of the supply for each sensor (between **tracks 1 and 3**) and for the computer (between **tracks 9 and 10**).
Computer with 2 connectors:
Check the **insulation, continuity and absence of interference resistance** of the supply between **tracks 1 and 3** for each sensor and between **tracks 8 and 11** of the computer **12-track** connector.

In the case where only one sensor is faulty:
Swap the defective sensor with a non-defective sensor.
Check for faults:

If the sensor is no longer faulty, replace the defective sensor.

If the fault is still present, **with the ignition off,** disconnect the parking distance control computer connector to check **the insulation, continuity and the absence of interference resistance** on the following connections**:**
1 connector:

Parking distance control computer		Right-hand outer sensor
Track 9	→	**Track 1**
Track 16	→	**Track 2**
Track 10	→	**Track 3**

Repair if necessary (see **Technical Note 6015A, Repairing electrical wiring, Wiring: Precautions for repair**), repair the wiring, otherwise replace the wiring.

AFTER REPAIR	Clear the stored faults. Follow the instructions to confirm repair. Deal with any faults.

GETtheMANUALS.org

DF004 (CONTINUED)	

2 connectors:

12-track parking distance control computer connector		Right-hand outer sensor
Track 11	→	**Track 1**
Track 4	→	**Track 2**
Track 8	→	**Track 3**

Repair if necessary (see **Technical Note 6015A, Repairing electrical wiring, Wiring: Precautions for repair**), repair the wiring, otherwise replace the wiring.

If the fault is still present, contact the Techline.

AFTER REPAIR	Clear the stored faults. Follow the instructions to confirm repair. Deal with any faults.

GETtheMANUALS.org

DF005 PRESENT OR STORED	RIGHT-HAND INNER SENSOR CC.1 : Short circuit to + 12 V CO.0 : Open circuit or short circuit to earth 1.DEF: Internal electronic fault

NOTES	**Conditions for applying the fault finding procedure to stored faults:** The fault is declared present following selection of reverse gear if the parking distance control function is **ACTIVE (READY)**: the parking distance control warning light is not lit, see the interpretation of status **ET003 Parking distance control function**.
	Special notes: This fault is indicated by the buzzer (a **5 second** warning sound) and the system shuts down.

If a combination of faults are present on the sensors:
Check the connection and condition of the intermediate connectors (the sensors up to the computer). Repair if necessary.
Check for **+ 12 V**, after ignition, between **tracks 1 and 3** of all the sensors.
Computer with 1 connector:
Check the **insulation, continuity and the absence of interference resistance** of the supply for each sensor (between **tracks 1 and 3**) and for the computer (between **tracks 9 and 10).**
Computer with 2 connectors:
Check the **insulation, continuity and absence of interference resistance** of the supply between **tracks 1 and 3** for each sensor and between **tracks 8 and 11** of the computer **12-track** connector.

In the case where only one sensor is faulty:
Swap the defective sensor with a non-defective sensor.
Check for faults:

If the sensor is no longer faulty, replace the defective sensor.

If the fault is still present, **with the ignition off,** disconnect the parking distance control computer connector to check **the insulation, continuity and the absence of interference resistance** on the following connections:
1 connector:

Parking distance control computer		Right-hand inner sensor
Track 9	→	**Track 1**
Track 13	→	**Track 2**
Track 10	→	**Track 3**

Repair if necessary (see **Technical Note 6015A, Repairing electrical wiring, Wiring: Precautions for repair**), repair the wiring, otherwise replace the wiring.

AFTER REPAIR	Clear the stored faults. Follow the instructions to confirm repair. Deal with any faults.

GETtheMANUALS.org

DF005 (CONTINUED)	

2 connectors:

12-track parking distance control computer connector		Right-hand inner sensor
Track 11	→	**Track 1**
Track 2	→	**Track 2**
Track 8	→	**Track 3**

Repair if necessary (see **Technical Note 6015A, Repairing electrical wiring, Wiring: Precautions for repair**), repair the wiring, otherwise replace the wiring.

If the fault is still present, contact the Techline.

AFTER REPAIR	Clear the stored faults. Follow the instructions to confirm repair. Deal with any faults.

GETtheMANUALS.org

DF006 PRESENT OR STORED	BUZZER CC.1 : Short circuit to + 12 V CO.0 : Open circuit or short circuit to earth

NOTES	**Conditions for applying the fault finding procedure to stored faults:** The fault is declared present following selection of reverse gear if the parking distance control function is **ACTIVE (READY)**: the parking distance control warning light is not lit, see the interpretation of status **ET003 Parking distance control function**.
	Special notes: The fault is indicated by the absence of the **1-second** beep normally emitted by the buzzer when reverse gear is selected.

Computer with 1 connector:
Switch off the ignition and disconnect the computer's **16-track connector**.
Measure the internal resistance of the computer between **tracks 2** and **6**.
If the value measured is not **314 Ω** or if there is a short circuit across the specified **tracks**, contact your Techline.
Computer with 2 connectors:
Switch off the ignition and disconnect the computer's **16-track connector**.
Measure the internal resistance of the computer between tracks **2 and 10**.
If the value measured is not **314 Ω** or if there is a short circuit across the specified **tracks**, contact your Techline.

Check **the connection and condition of the connector** on the buzzer.
Replace the connector if necessary.

Switch off the ignition, and disconnect the parking distance control computer **16-track** connector to check the **insulation and continuity and ensure the absence of interference resistance** on the following connections:
1 connector:

Parking distance control computer		Buzzer
Track 2	→	**Track 2**
Track 6	→	**Track 1**

Repair if necessary (see **Technical Note 6015A, Repairing electrical wiring, Wiring: Precautions for repair**), repair the wiring, otherwise replace the wiring.

AFTER REPAIR	Clear the stored faults. Follow the instructions to confirm repair. Deal with any faults.

GETtheMANUALS.org

DF006 (CONTINUED)	

2 connectors:

16-track parking distance control computer connector		Buzzer
Track 10	→	**Track 2**
Track 2	→	**Track 1**

Repair if necessary (see **Technical Note 6015A, Repairing electrical wiring, Wiring: Precautions for repair**), repair the wiring, otherwise replace the wiring.

Measure the buzzer resistance between **tracks 1 and 2**.
Replace the buzzer if its resistance is not approximately **48 Ω**.

If the fault is still present, replace the buzzer.

AFTER REPAIR	Clear the stored faults. Follow the instructions to confirm repair. Deal with any faults.

GETtheMANUALS.org

DF007 PRESENT OR STORED	SENSOR SUPPLY VOLTAGE CO.0 : Open circuit

NOTES	**Conditions for applying the fault finding procedure to stored faults:** The fault reappears present or stored after its has been cleared, the ignition is switched on and off again and reverse gear is selected.
	Special notes: The sensors are directly supplied with **+ 12 V** by the computer.

Computer with 1 connector:
With the parking distance control computer **16-track** connector **connected** and with the **ignition on**, measure the sensor **power supply** coming from the computer. The voltage should be equal to the battery voltage (**± 0.5 V**) when measured across **track 9** (**+ 12 V**) and **track 10** (earth).
If there is not a **+ 12 V** power supply between the **tracks** specified above, remove the rear bumper to access the sensors.
Computer with 2 connectors:
With the parking distance control computer **12-track** connector **connected** and with the **ignition on**, measure the sensor **power supply** from the computer outlet. The voltage should be equal to the battery voltage (± **0.5** V) when measured across **track 11** (+ **12** V) and **track 8** (earth).
If there is not a **+ 12 V** power supply between the **tracks** specified above, remove the rear bumper to access the sensors.
Switch off the ignition, and disconnect the parking distance control computer connector to check the **insulation and continuity and the absence of interference resistance** on the following connections:
1 connector:

Parking proximity sensor computer connector		Sensors
Track 9	→	**Track 1 of the four sensors**
Track 10	→	**Track 3 of the four sensors**

Repair if necessary (see **Technical Note 6015A, Repairing electrical wiring, Wiring: Precautions for repair**), repair the wiring, otherwise replace the wiring.

AFTER REPAIR	Clear the stored faults. Follow the instructions to confirm repair. Deal with any faults.

GETtheMANUALS.org

DF007 (CONTINUED)	

2 connectors:

12-track parking distance control computer connector		Right-hand inner sensor
Track 11	→	**Track 1**
Track 8	→	**Track 3**

Repair if necessary (see **Technical Note 6015A, Repairing electrical wiring, Wiring: Precautions for repair**), repair the wiring, otherwise replace the wiring.

If the sensor power supply is correct (no short circuit), reconnect the computer connector and four sensor connectors.
Turn on the ignition and disconnect the sensors, one at a time, to see if any of the sensors causes the power supply to drop. Replace the defective sensor.

If the fault is still present, contact the Techline.

AFTER REPAIR	Clear the stored faults. Follow the instructions to confirm repair. Deal with any faults.

GETtheMANUALS.org

DF008 PRESENT OR STORED	COMPUTER FAULT 1.DEF: Internal electronic fault 2.DEF: Internal electronic fault 3.DEF: Internal electronic fault 4.DEF: Internal electronic fault

NOTES	**Conditions for applying the fault finding procedure to stored faults:** The fault reappears present or stored after its has been cleared, the ignition is switched on and off again and reverse gear is selected.
	Special notes: If the fault is present and is represented by **1.DEF** or **2.DEF**, the system operates in defect mode (substitute values are used). If the fault is present and characterised **3.DEF** and the buzzer fails to sound when shifting into reverse, contact your Techline.

1.DEF ***2.DEF***	***NOTES***	None

After following the instructions, if the fault recurs, switch off the ignition and disconnect the parking distance control computer supply fuse (see vehicle diagram).
Reconnect the fuse, switch the ignition back on, and perform a fault reading.

If the fault recurs, check **the connections and condition** of the parking distance control computer **16-track** connector (no damage to the connections).
Repair if necessary.

With the ignition switched off, disconnect the parking distance control computer **16-track** connector to check the **conformity of the supplies** and to check the **insulation, continuity and the absence of interference resistance** on the following connections:

16-track parking distance control computer connector with 1 connector:

Track 1 ⟶ + after ignition feed

Track 3 ⟶ earth

AFTER REPAIR	Clear the stored faults. Follow the instructions to confirm repair. Deal with any faults.

GETtheMANUALS.org

DF008 (CONTINUED)	

16-**track** parking distance control computer with 2 connectors:

Track 1 → + after ignition feed

Track 8 → earth

Repair if necessary (refer to vehicle wiring diagrams).

If the fault is still present, contact the Techline.

3.DEF	*NOTES*	None

Contact the Techline.

4.DEF	*NOTES*	**Only for Vdiag 08**

Contact the Techline.

AFTER REPAIR	Clear the stored faults. Follow the instructions to confirm repair. Deal with any faults.

GETtheMANUALS.org

DF012 PRESENT OR STORED	PARKING DISTANCE CONTROL SWITCH INDICATOR LIGHT CC.0 : short circuit to earth or open circuit CO.1 : open circuit or short circuit to + 12 volts

NOTES	**Conditions for applying the fault finding procedure to stored faults:** A fault is declared present after reverse gear is engaged and the parking distance control deactivation switch is pressed.

Remove the parking distance control switch and check the connections and condition of its connector.
Repair if necessary.

Check for an earth on **track B3** of the parking distance control switch connector.
Repair if necessary.

Switch off the ignition, and disconnect the parking distance control computer **16-track** connector to check the **insulation and continuity and the absence of interference resistance** on the following connection:
Laguna II ph2, Espace IV ph2, Vel-Satis ph2, Mégane II, Scénic II, Laguna II ph1 (1 connector), Espace IV ph1 (1 connector), Vel-Satis ph1 (1 connector), Laguna II ph1 (2 connectors), Vel-Satis ph1 (2 connectors), Clio III, Modus ph2:

Parking distance control switch connector		Parking proximity sensor computer connector
Track B2	→	**Track 5**

Repair if necessary.

Espace IV ph1 (2 connectors):

Parking distance control switch connector		**16-track** parking distance control computer connector
Track B2	→	**Track 13**

Repair if necessary.

If the fault is still present, replace the parking distance control switch.

AFTER REPAIR	Clear the stored faults. Follow the instructions to confirm repair. Deal with any faults.

GETtheMANUALS.org

NOTES	Only perform this conformity check after a thorough check with the **diagnostic tool**. **Conditions for applying the fault finding procedure:** ignition on.

Order	Function	Parameter or Status checked or Action		Display and Notes	Fault finding
1	Parking distance control system status	**ET003:**	Parking distance control function	**READY** (system operating and ready to detect)	For further information or, if there is a fault, consult the interpretation of status **ET003**.
				DETECTING (if the system is detecting)	
				SUSPENDED (if the system is temporarily switched off)	
				OFF (if the system is completely switched off)	
2	Parking distance control deactivation switch.	**ET004:**	Parking distance control switch	**PRESS DETECTED** when the switch is pressed, **RELEASED** when released.	In the event of a fault, consult the interpretation of status **ET004**.
3	Feeds	**PR006:**	Sensor feed voltage	**10.5 V < X < 14.4 V**	In the event of a fault, apply the fault finding procedure for **DF007 Sensor supply voltage**.
		PR020:	Computer feed voltage	**10.5 V < X < 14.4 V**	If there is a fault with this parameter, check the **insulation, continuity and the absence of interference resistance** on the computer power feed and earth (see wiring diagram). If the fault is still present, carry out **fault finding on the charging circuit**.
4	Reverse gear selection	**ET001:**	Reverse gear engaged	**YES** or **NO**	If there is a fault, refer to the interpretation of status **ET001**.

GETtheMANUALS.org

NOTES	Only perform this conformity check after a thorough check with the **diagnostic tool**. **Conditions for applying the fault finding procedure:** ignition on.

Order	Function	Parameter or Status checked or Action	Display and Notes	Fault finding
5	Buzzer control	**ET002:** Buzzer control	**ACTIVE** when the buzzer sounds. **INACTIVE** if not.	In the event of a fault, consult the interpretation of status **ET002**.
6	Proximity sensors	**PR001:** Left-hand outer sensor distance	**20 cm < X < 150 cm** depending on the distance from the obstacle (“out of range” value: **255 cm**).	In the event of a fault, refer to the interpretation of the parameter **PR001**.
		PR002: Left-hand inner sensor distance	**20 cm < X < 150 cm** depending on the distance from the obstacle (“out of range” value: **255 cm**).	If there is a fault, refer to the interpretation of parameter **PR002**.
		PR003: Right-hand outer sensor distance	**20 cm < X < 150 cm** depending on the distance from the obstacle (“out of range” value: **255 cm**).	In the event of a fault, consult the interpretation of parameter **PR003**.
		PR004: Right-hand inner sensor distance	**20 cm < X < 150 cm** depending on the distance from the obstacle (“out of range” value: **255 cm**).	If there is a fault, refer to the interpretation of parameter **PR004**.
		PR005: Shortest distance calculated	**20 cm < X < 150 cm** depending on the distance from the obstacle (“out of range” value: **255 cm**).	If there is a fault, refer to the interpretation of parameter **PR005**.
7	**Vdiag 08 only:** Caravan attachment detection zone	**PR026**: Distance from the caravan attachment	**By default: 35 cm** Beyond **40 cm**, the function is less effective, (setting the detection area of the rear centre sensors so that the presence of a caravan towbar is not detected)	If the caravan attachment is detected, increase the non-detection value using parameter **VP003**.
		VP003: Distance from the caravan attachment	Enables the non-detection area for the caravan attachment to be modified.	

GETtheMANUALS.org

Tool status	Diagnostic tool title
ET001	Reverse gear engaged
ET002	Buzzer control
ET003	Parking distance control function
ET004	Parking distance control switch

GETtheMANUALS.org

ET001	REVERSE GEAR ENGAGED

NOTES	**Special note:** Only carry out the checks if the YES and NO statuses are not consistent with the position of the gear lever.

1 connector:

Check that the reversing lights are working correctly: they should come on when reverse gear is selected and go out when it is not.

If the reversing lights fail to function as specified:
With the ignition switched off, disconnect the parking distance control computer connector to check the **insulation** (against **+ 12 V**), **and the continuity and absence of interference resistance** on the following connection:
Laguna II ph1 ph2, Espace IV ph1 ph2, Vel-Satis ph2, Clio III, Modus ph2:

Parking distance control computer connector		Rear lights connector
Track 4	→	**Track 3**

Repair if necessary (see **Technical Note 6015A, Repairing electrical wiring, Wiring: Precautions for repair**), repair the wiring, otherwise replace the wiring.

Vel-Satis ph1, Scénic II:

Parking distance control computer connector		Rear left hand lights connector
Track 4	→	**Track 2**

Repair if necessary (see **Technical Note 6015A, Repairing electrical wiring, Wiring: Precautions for repair**), repair the wiring, otherwise replace the wiring.

AFTER REPAIR	Repeat the conformity check from the start.

GETtheMANUALS.org

ET001 (CONTINUED 1)	

Mégane II:
Only for 3 and 5-door hatches:

Parking distance control computer connector (white) — Left-hand rear light connector

Track 4 → **Track 5**

Parking distance control computer connector (white) — Right-hand rear light connector

Track 4 → **Track 1**

Repair if necessary (see **Technical Note 6015A, Repairing electrical wiring, Wiring: Precautions for repair**), repair the wiring, otherwise replace the wiring.

Only for 4-door hatches:

Parking distance control computer connector (white) — Left-hand rear light connector

Track 4 → **Track 5**

Parking distance control computer connector (white) — Right-hand rear light connector

Track 4 → **Track 2**

Repair if necessary (see **Technical Note 6015A, Repairing electrical wiring, Wiring: Precautions for repair**), repair the wiring, otherwise replace the wiring.

Only for cabriolets:

Parking distance control computer connector (white) — Left-hand rear light connector

Track 4 → **Track 6**

Parking distance control computer connector (white) — Right-hand rear light connector

Track 4 → **Track 1**

Repair if necessary (see **Technical Note 6015A, Repairing electrical wiring, Wiring: Precautions for repair**), repair the wiring, otherwise replace the wiring.

AFTER REPAIR	Repeat the conformity check from the start.

GETtheMANUALS.org

ET001 (CONTINUED 2)	

Only for estates:

Parking distance control computer connector (white)		Left-hand rear light connector
Track 4	→	**Track 5**
Parking distance control computer connector (white)		Right-hand rear light connector
Track 4	→	**Track 5**

Repair if necessary (see **Technical Note 6015A, Repairing electrical wiring, Wiring: Precautions for repair**), repair the wiring, otherwise replace the wiring.

2 connectors:

Laguna II ph1, Espace IV ph1, Vel-Satis ph2, Clio III:

Parking distance control computer connector		Rear light connector
Track 6	→	**Track 3**

Repair if necessary (see **Technical Note 6015A, Repairing electrical wiring, Wiring: Precautions for repair**), repair the wiring, otherwise replace the wiring.

Vel Satis ph1:

Parking distance control computer connector		Rear light connector
Track 6	→	**Track 2**

Repair if necessary (see **Technical Note 6015A, Repairing electrical wiring, Wiring: Precautions for repair**), repair the wiring, otherwise replace the wiring.

AFTER REPAIR	Repeat the conformity check from the start.

GETtheMANUALS.org

ET002	BUZZER CONTROL

NOTES	There must be no present or stored faults.

ET002 remains OFF	Check that the parking distance control system is switched on using status **ET003 "Parking distance control function"** (parking distance control switch warning light goes out). If the status displays “suspended” or “deactivated”, restart the system by pressing for **1 or 3 seconds**, consult the interpretation of status **ET003 “Parking distance control function”**.
	Check that the parking distance control configuration is correct for the vehicle on which it is fitted (**LC005 Vehicle identification**). If necessary, reconfigure the computer using command **CF005 Vehicle identification**.
	Check, when the vehicle is close to an obstacle (between **20 and 150 cm**), that the distance evaluated corresponds to the distance displayed by the **diagnostic tool** (**PR001** to **PR004**). If the distance reading does not match or the distance parameters stay at **255 cm**, contact your Techline.

ET002 ON but buzzer does not sound	Check that the buzzer volume is not at a zero setting **LC001 Buzzer volume**. If the configured volume is **ZERO or DEACTIVATED**, reconfigure the computer using command **CF001 Buzzer volume**. Select the volume required by the customer.
	Switch off the ignition, and disconnect the parking distance control computer 16-track connector to check the **insulation and continuity and ensure the absence of interference resistance** on the following connections: **Laguna II ph2, Espace IV ph2, Espace IV ph1 (1 connector), Vel-Satis ph2, Vel-Satis ph1 (1 connector), Laguna II ph1 (1 connector),** Parking distance control computer → Buzzer **Track 2** → **Track 1** **Track 6** → **Track 2** Repair if necessary (refer to vehicle wiring diagrams).

AFTER REPAIR	Repeat the conformity check from the start.

GETtheMANUALS.org

ET002 (CONTINUED)	

Mégane II, Scénic II, Clio III, Modus ph2:

Parking distance control computer		Buzzer
Track 2	→	**Track 2**
Track 6	→	**Track 1**

Repair if necessary (refer to vehicle wiring diagrams).

Laguna II ph1 (2 connector), Espace IV ph1 (1 connector), Vel-Satis ph1 (1 connector):

Parking distance control computer		Buzzer
Track 10	→	**Track 2**
Track 2	→	**Track 1**

Repair if necessary (refer to vehicle wiring diagrams).

Measure the resistance between the buzzer's 2 **tracks**.
Replace the buzzer if its resistance is not approximately **48 Ω**.

If the fault is still present, replace the buzzer.

AFTER REPAIR	Repeat the conformity check from the start.

GETtheMANUALS.org

ET003	PARKING DISTANCE CONTROL FUNCTION

NOTES	**Special note**: If the parking distance control system is suspended or deactivated, the parking distance control switch indicator light comes on.

This status indicates whether the parking distance control system is on or off:

ET003: READY → This means that, when reversing, the parking distance control detects obstacles and the buzzer sounds (the parking distance control switch indicator light goes out).

ET003: DETECTING → This information is displayed when in reverse gear and indicates that the parking distance control has detected an obstacle.

ET003: SUSPENDED → This means the parking distance control system is switched off (no detection possible). The suspension is **temporary** because the parking distance control system will come back on after the ignition is switched off and on. To suspend or reactivate the system manually, **briefly press** (**1 second**) the parking distance control switch.

ET003: DEACTIVATED → This means the parking distance control system is switched off (no detection possible). This suspension is **permanent** (switching the + after ignition off and on again will not reactivate the system). To deactivate or reactivate the system manually, **press and hold** (**3 seconds**) the parking distance control switch.

If the status is not as specified, check for an **earth** on **track A2** of the parking distance control switch. Repair if necessary.

With the ignition off, disconnect the parking distance control switch to check the **insulation** (against the earth and **+ 12 V**), **continuity and absence of interference resistance** in the following connection:
Laguna II ph2, Espace IV ph2, Vel-Satis ph2, Mégane II, Scénic II, Espace IV ph1 (1 connector), Vel-Satis ph1 (1 connector), Clio III, Modus ph2:

Parking distance control switch connector **Track B1** → Parking distance control computer connector **Track 12**

Repair if necessary

AFTER REPAIR	Repeat the conformity check from the start.

GETtheMANUALS.org

ET003 **CONTINUED**	

Espace IV ph1 (2 connectors), Vel-Satis ph1 (2 connectors):

Parking distance control switch connector **Track B1** → Parking distance control computer connector **Track 12**

Repair if necessary

If the connection just checked is OK (no open or short circuit), and there is an **earth** on **track A2** of the switch but the fault is still present, check the switch operation with an ohmmeter.
Switch not pressed: **insulation** between **track A2** and **B1**.
Switch pressed: **continuity** between **track A2** and **B1**.
Replace the parking distance control switch if it fails to function as specified.

AFTER REPAIR	Repeat the conformity check from the start.

GETtheMANUALS.org

ET004	PARKING DISTANCE CONTROL SWITCH

NOTES	**Special notes:** Only apply the status interpretation procedure if the parking distance control switch position is not consistent with the information supplied by status (**"Press detected" or "Release"**). There must be no present or stored faults.

With the ignition off, disconnect the parking distance control switch to check the **insulation** (against the earth and **+ 12 V**), **continuity and absence of interference resistance** in the following connection:

Parking distance control switch connector		Parking distance control computer connector
Track B1	→	**track 12**

Repair if necessary.

If the connection just checked is OK (no open or short circuit), and there is an **earth** on **track A2** of the switch but the fault is still present, check the switch operation with an ohmmeter.
Switch not pressed: **insulation** between **track A2** and **B1**.
Switch pressed: **continuity** between **track A2** and **B1**.
Replace the parking distance control switch if it fails to function as specified.

AFTER REPAIR	Repeat the conformity check from the start.

GETtheMANUALS.org

Tool parameter	Diagnostic tool title
PR001	Left-hand outer sensor distance
PR002	Left-hand inner sensor distance
PR003	Right-hand outer sensor distance
PR004	Right-hand inner sensor distance
PR005	Shortest distance calculated
PR006	Sensor feed voltage
PR020	Computer feed voltage
PR026	Distance from caravan attachment **(Vdiag 08 only)**

GETtheMANUALS.org

PR001 **PR002** **PR003** **PR004**	LEFT-HAND OUTER SENSOR DISTANCE LEFT-HAND INNER SENSOR DISTANCE RIGHT-HAND OUTER SENSOR DISTANCE RIGHT-HAND INNER SENSOR DISTANCE

NOTES	**Special notes:** Before searching for a fault with these parameters, make sure no fault is present or stored. If there is a fault, apply the interpretation for the fault detected by the **diagnostic tool**.
	Note: The ultrasonic sensors are very fragile. Therefore, when removing the rear bumper, be careful not to scratch them. An obstacle which is further than **150 cm** away cannot be detected, the parameter value is **255** in this case. For an obstacle which is between **20** and **150 cm** away, the parameter value is the distance to the obstacle. For an obstacle which is closer than **20 cm** away, the value of the parameters is **0**.

Using the **diagnostic tool** configuration reading screen (repair mode menu), check that the parking distance control system is configured correctly for the vehicle type to which it is fitted (**LC005 Vehicle identification**).
If necessary, reconfigure the computer using command **CF005 Vehicle identification**.

Check, when the vehicle is close to an obstacle (between **20 and 150 cm**), that the distance evaluated corresponds to the distance displayed by the **diagnostic tool** (**PR001** to **PR004**).
If the distance is incorrect or if the distance parameters remain at **255**, make sure nothing is interfering with the reading (sticker, mud, snow etc. on the rear bumper).

If the distances displayed by the sensors seem incorrect or if **255** is displayed continuously, check the condition of the sensor(s). There must be no scratches on the detection component (outer metal section) of the sensors.
Replace the defective sensor.

If the fault is still present, apply the fault finding procedure to the sensor whose distance parameter is incorrect (even if the **diagnostic tool** does not report a fault).

AFTER REPAIR	Repeat the conformity check from the start.

GETtheMANUALS.org

PR005	SHORTEST DISTANCE CALCULATED

NOTES	**Special notes:** Before searching for a fault with this parameter, make sure that no fault is present or stored. If there is a fault, apply the interpretation for the fault detected by the **diagnostic tool**.
	Note: The ultrasonic sensors are very fragile. Therefore, when removing the rear bumper, be careful not to scratch them. **This parameter is an average calculated by the computer when an obstacle is placed between two sensors.** When below **30 cm**, the estimated distance is displayed as **0 cm** (critical detection zone with constant warning sound).

Using the diagnostic tool configuration reading screen, check that the parking distance control system is configured correctly for the body on which it is fitted **LC005 Vehicle identification**). If necessary, reconfigure the computer using command **CF005 Vehicle identification**.
With the vehicle close to an obstacle (between **0 and 150** cm), check whether the calculated distance is consistent. If the distance is inconsistent or if the parameter remains at 255, ensure that nothing is interfering with the measurement (sticker, mud or snow, etc. on the rear bumper).
If the distance calculated is still inconsistent or if it is continuously displayed as **255**, check the condition of the sensors; the detection part (metallic outer part) must not have any scratches. Replace the defective sensor.
If the fault is still present, apply the fault finding procedure to the sensor whose distance parameter is incorrect (even if the **diagnostic tool** does not report a fault).

AFTER REPAIR	Repeat the conformity check from the start.

PARKING DISTANCE CONTROL
Fault finding - Customer complaints

GETtheMANUALS.org

NOTES	**Only consult this customer complaint after a complete check with the diagnostic tool.**

NO DIALOGUE WITH THE COMPUTER	→ **ALP1**
NO BUZZER	→ **ALP2**
WARNING SOUND EMITTED CONTINUOUSLY (NO OBSTACLE DETECTED)	→ **ALP3**

GETtheMANUALS.org

ALP1	No dialogue with the computer

NOTES	None

Try the **diagnostic tool** on another vehicle.

Check:
– The connection between the **diagnostic tool** and the diagnostic socket (lead in good condition).
– The injection, engine and passenger compartment fuses.

Check for the **+ 12 V battery feed** on **track 16**, for a **+ 12 V after ignition feed** on **track 1** and for **earth** on **track 5** and on **track 4** of the diagnostic socket.
Repair if necessary.

1 connector:
Switch off the ignition, and disconnect the parking distance control computer connector to check the **insulation, continuity and absence of interference resistance** on the following connections:

Parking distance control computer connector

Track 1 → **+ Before ignition** (see vehicle diagram)

Track 3 → **Earth**

Track 8 → **track 7** of the diagnostic socket (K line)

Repair if necessary (refer to vehicle wiring diagrams).

2 connectors:
Switch off the ignition, and disconnect the parking distance control computer **16-track** connector to check the **insulation and continuity and ensure the absence of interference resistance** on the following connections:

Parking distance control computer connector

Track 1 → **+ Before ignition** (see vehicle diagram)

Track 8 → **Earth**

Track 12 → **track 7** of the diagnostic socket (K line)

Repair if necessary (refer to vehicle wiring diagrams).

AFTER REPAIR	Carry out a complete check using the diagnostic tool.

GETtheMANUALS.org

ALP2	No buzzer

NOTES	Only investigate this customer complaint **after a full check using the diagnostic tool** (no faults must be present or stored).

Using the diagnostic tool Main Data screen, check that the parking distance control system is on.
The status **ET003 Parking distance control function** must be READY (and the red warning light on the parking distance control switch must be off).

Is status ET003 READY?

NO → Turn on the parking distance control by pressing the switch for **1 or 3** seconds (the red light should go out).
Note:
For more information concerning the activation of the system, consult the interpretation of status **ET003 Parking distance control**.

YES ↓

Is status ET001 "YES", with reverse gear engaged?

NO → Apply the interpretation procedure for status **ET001**

YES ↓

Using the diagnostic tool configuration readings screen, check that the buzzer volume has not been switched off (**LC001 Buzzer volume** should not be ZERO)

Is the LC001 function ZERO

YES → Reconfigure the buzzer volume using the diagnostic tool (command **CF001 Buzzer volume**).

NO ↓

(A)

AFTER REPAIR	Check that the system is operating correctly.

GETtheMANUALS.org

ALP2 CONTINUED 1	

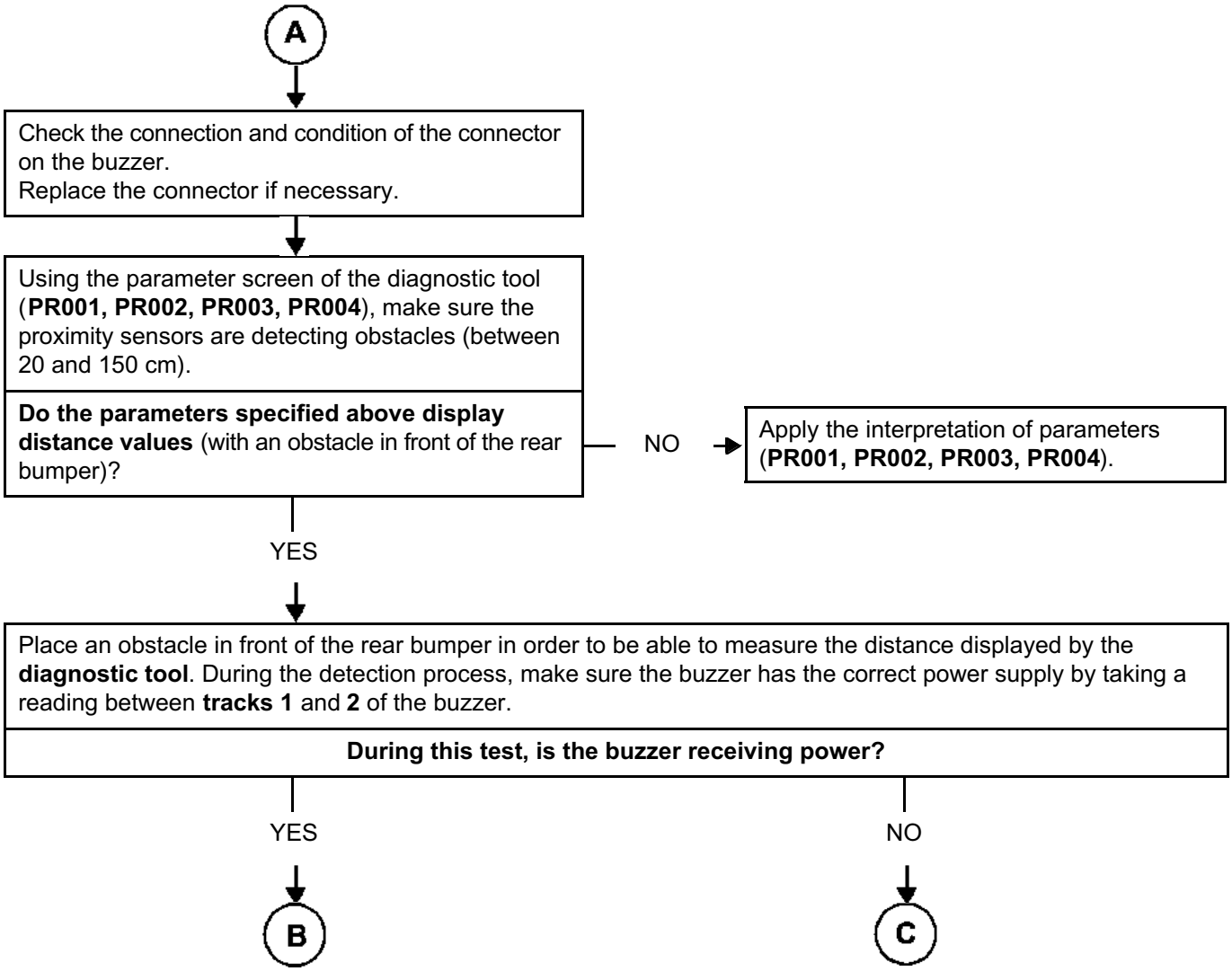

AFTER REPAIR	Check that the system is operating correctly.

GETtheMANUALS.org

ALP2 CONTINUED 2	

(B)

Measure the resistance between the buzzer's two tracks. Replace the buzzer if its resistance is not approximately **48 Ω**.

Is the fault still present?

YES

Replace the buzzer.

NO

(C)

Switch off the ignition, and disconnect the parking distance control computer **16-track** connector to check the **insulation and continuity and ensure the absence of interference resistance on the following connections**:

Parking distance control computer with 1 connector		Buzzer
Track 2	→	**Track 2**
Track 6	→	**Track 1**

Parking distance control computer with 2 connectors:		Buzzer
Track 10	→	**Track 2**
Track 2	→	**Track 1**

Repair if necessary (see vehicle wiring diagrams).

Is the fault still present?

NO

End of fault finding procedure.

YES

Contact the Techline.

AFTER REPAIR	Check that the system is operating correctly.

PARKING DISTANCE CONTROL
Fault finding - Fault Finding Chart

GETtheMANUALS.org

ALP3	Buzzer sounds constantly (no obstacle detected)

NOTES	Only investigate this customer complaint **after a full check using the diagnostic tool** (no faults must be present or stored).

Switch off the ignition, and disconnect the parking distance control computer connector to check the **insulation and continuity and ensure the absence of interference resistance** on the following connections:

1 connector: Parking distance control computer — Buzzer

Track 2 → **Track 2**
Track 6 → **Track 1**

Note:
The line coming from **track 2** of the computer must be insulated against + 12 V and the line coming from **track 6** of the computer must be insulated against earth.

2 connectors:

Parking distance control computer **16-track** connector — Buzzer

Track 10 → **Track 2**
Track 2 → **Track 1**

Repair if necessary (see vehicle wiring diagram).

Is the fault still present?

NO → End of fault finding procedure.

YES ↓

With no obstacle less than 150 cm in front of the rear bumper, check that the distance parameters on the diagnostic tool are 255 cm out of range (**PR001, PR002, PR003, PR004**).
If the parameters display a setting even though there is no obstacle in front of the rear bumper, make sure nothing is interfering with the reading (sticker, mud, snow etc. on the rear bumper).
Repair if necessary.

↓

End of fault finding procedure.

AFTER REPAIR	Check that the system is operating correctly.

GETtheMANUALS.org

VEL SATIS

8 Electrical equipment

87F PARKING DISTANCE CONTROL

Vdiag No.: 0C

Fault finding - Introduction	87F - 2
Fault finding - System operation	87F - 7
Fault finding - Allocation of computer tracks	87F - 8
Fault finding - Replacement of components	87F - 9
Fault finding - Configurations and programming	87F - 10
Fault finding - Fault summary table	87F - 12
Fault finding - Interpretation of faults	87F - 13
Fault finding - Conformity check	87F - 25
Fault finding - Status summary table	87F - 28
Fault finding - Interpretation of statuses	87F - 29
Fault finding - Parameter summary table	87F - 32
Fault finding - Interpretation of parameters	87F - 33
Fault finding - Customer complaints	87F - 37
Fault finding - Fault Finding Chart	87F - 38

V4 **Edition Anglaise**

"The repair procedures given by the manufacturer in this document are based on the technical specifications current when it was prepared.

The procedures may be modified as a result of changes introduced by the manufacturer in the production of the various component units and accessories from which his vehicles are constructed."

All rights reserved by Renault s.a.s.

Copying or translating, in part or in full, of this document or use of the service part reference numbering system is forbidden without the prior written authority of Renault s.a.s.

© Renault s.a.s. 2011

GETtheMANUALS.org

1. SCOPE OF THIS DOCUMENT

This document presents the fault finding method applicable to all computers with the following specifications:

Vehicle: **Vel Satis Phase 2, Espace IV, Laguna 2** *Function concerned:* **Parking distance control**	*Computer name:* **Parking distance control** *Vdiag No.:* **0C**

2. PREREQUISITES FOR FAULT FINDING

Documentation type

Fault finding procedures (this document):
– Assisted fault finding (integrated into the diagnostic tool), Dialogys.
Wiring Diagrams:
– Visu-Schéma (CD-ROM), paper.

Type of diagnostic tools

– **CLIP + multiplex line sensor**

Special tooling required

Special tooling required	
	Multimeter
Elé. 1681	**Universal bornier**

3. REMINDERS

Procedure

In order to save energy, the Vel Satis Phase 2 UCH cuts off the + after ignition feed after 3 minutes.

To run fault finding on a computer, force the + after ignition feed for 1 hour by applying the following procedure:
– Press the card unlocking button,
– insert the card in the reader,
– press the start button (interrupting the timed + after ignition feed mode),
– press the start button for more than 5 seconds, until the immobiliser warning light flashes rapidly (4 Hz).
This forced + after ignition feed mode remains active for 1 hour.
Pressing the start button or removing the card from the card reader interrupts the forced + after ignition feed, but does not interrupt the time period for the forced + after ignition feed. Until one hour has elapsed, activating the + after ignition feed will restart forced + after ignition feed for the remaining time.

GETtheMANUALS.org

Faults

Faults are declared present or stored (depending on whether they appeared in a certain context and have disappeared since, or whether they remain present but are not diagnosed within the current context).

The **present** or **stored** status of the faults should be considered when the diagnostic tool is switched on after the + after ignition feed is switched on (with no system components being active).

For a **present fault**, apply the procedure described in the **Interpretation of faults** section.

For a **stored fault**, note the faults displayed and apply the **Notes** section.

If the fault is **confirmed** when the instructions are applied, the fault is present. Deal with the fault.

If the fault is **not confirmed**, check:
- the electrical lines which correspond to the fault,
- the connectors for these lines (for oxidation, bent pins, etc.),
- the resistance of the faulty component,
- the condition of the wires (melted or split insulation, wear).

Conformity check

The aim of the conformity check is to check data that does not produce a fault on the diagnostic tool when the data is inconsistent. Therefore, this stage is used to:
- carry out fault finding on faults that do not have a fault display, and which may correspond to a customer complaint,
- check that the system is operating correctly and that there is no risk of a fault recurring after repairs.

This section gives the fault finding procedures for statuses and parameters and the conditions for checking them.

If a status is not behaving normally or a parameter is outside the permitted tolerance values, consult the corresponding fault finding page.

Customer complaints - Fault finding chart

If the test with the diagnostic tool is OK but the customer complaint is still present, the fault should be processed by **Customer complaints**.

A synopsis of the general procedure to follow is provided on the following page in the form of a flow chart.

GETtheMANUALS.org

4. FAULT FINDING PROCEDURE

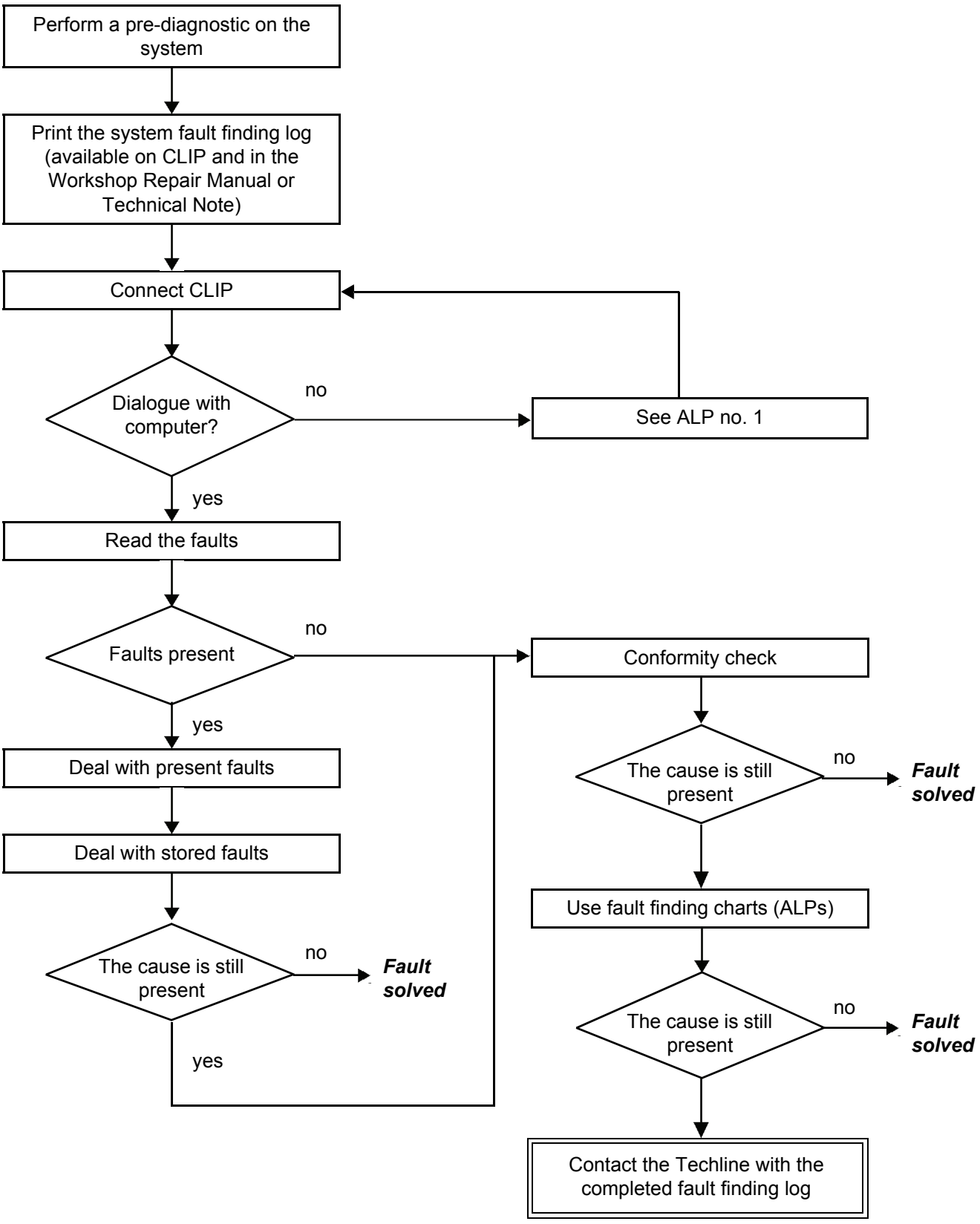

GETtheMANUALS.org

4. FAULT FINDING PROCEDURE (continued)

Wiring check

Fault finding problems
Disconnecting the connectors and/or manipulating the wiring may temporarily remove the cause of a fault.
Electrical measurements of voltage, resistance and insulation are generally correct, especially if the fault is not present when the analysis is made (stored fault).

Visual inspection
Look for damage under the bonnet and in the passenger compartment.
Carefully check the fuses, insulators and wiring harness routing.
Look for signs of oxidation.

Physical inspection
While manipulating the wiring, use the diagnostic tool to note any change in fault status from stored to present.
Make sure that the connectors are properly locked.
Apply light pressure to the connectors.
Twist the wiring harness.
If there is a change in status, try to locate the source of the fault.

Inspection of each component
Disconnect the connectors and check the appearance of the clips and tabs, as well as the crimping (no crimping on the insulating section).
Make sure that the clips and tabs are properly locked in the sockets.
Check that no clips or tabs have been dislodged during connection.
Check the clip contact pressure using an appropriate model of tab.

Resistance check
Check the continuity of entire lines, then section by section.
Look for a short circuit to earth, to **+ 12 V** or with another wire.

If a fault is detected, repair or replace the wiring harness.

GETtheMANUALS.org

5. FAULT FINDING LOG

IMPORTANT!

IMPORTANT
Any fault on a complex system requires thorough fault finding with the appropriate tools. The FAULT FINDING LOG, which should be completed during the fault finding procedure, ensures a record is kept of the procedure carried out. It is an essential document when consulting the manufacturer.

IT IS THEREFORE ESSENTIAL THAT THE FAULT FINDING LOG IS FILLED OUT EVERY TIME IT IS REQUESTED BY TECHLINE OR THE WARRANTY RETURNS DEPARTMENT.

You will always be asked for this log:

- when requesting technical assistance from Techline,
- for approval requests when replacing parts for which approval is mandatory,
- to be attached to monitored parts for which reimbursement is requested. The log is needed for warranty reimbursement, and enables better analysis of the parts removed.

6. SAFETY INSTRUCTIONS

Safety rules must be observed during any work on a component to prevent any damage or injury:

– check the battery voltage to avoid incorrect operation of computer functions,
– use the appropriate tools,
– do not touch the discharge bulbs, and do not work on the COSLAD system when it is in operation, as the voltage can be above 20,000 V.

GETtheMANUALS.org

Description of operation

The system consists of four sensors integrated into the rear bumper, plus four sensors in the front bumper, a computer, a rear buzzer and a front buzzer.
The system assists the driver during parking manoeuvres by warning of any obstacles behind or in front of the vehicle.

- The sensors and the computer calculate the distance between the vehicle and any obstacles. The sensors operate over a distance range from **20 - 30 cm minimum to 150 cm maximum**.
- The driver is informed of the distances by **buzzers**.
- The system only works when the vehicle **is in reverse gear**. Activation is indicated by a **brief 0.5 second activation sound**.
- The buzzer is activated when the vehicle is **150 cm** from the obstacle. As the distance diminishes, the frequency of the buzzer increases. When the distance reaches **20 - 30 cm**, the buzzer becomes continuous.
- The front system is only activated when the vehicle is travelling at below **12 mph (20 km/h)**.
- The front buzzer is activated when the vehicle is **60 cm** from the obstacle (90 cm if reverse gear was engaged beforehand). As the distance diminishes, the frequency of the buzzer increases. When the distance reaches **20 - 30 cm**, the buzzer becomes continuous.
- The system can only be **activated** in **+ after ignition feed**.

DEACTIVATING THE SYSTEM:

- The parking proximity sensor system can be deactivated in two ways:
- **Temporary deactivation: briefly pressing** (1 second) the parking distance control switch on the instrument panel deactivates the system (the red warning light on the switch comes on). The function can be switched on again by pressing **briefly** for a second time (the red indicator light on the switch goes out) or by switching the ignition off and back on.
- **Permanent deactivation:** The parking distance control system can be deactivated **for a longer period** by **pressing and holding** (for approximately 3 seconds) the parking distance control switch on the instrument panel (the red warning light on the switch comes on). The function can be switched on again only by **pressing and holding** the switch again (the red warning light on the switch goes out).

Note:
The statuses in the diagnostic tool can be used to determine the status of the system (ready, detecting, suspended or deactivated) through status **ET003 Parking proximity function** (see conformity check or status interpretation).

Fault finding:
A low pitch 5-second continuous warning sound informs the driver that a system fault has occurred when the ignition is switched on.

GETtheMANUALS.org

Track	Description
Yellow 16-track connector	
1	+ 12 V after ignition feed
2	+ 12 V front and rear buzzers
3	Computer earth
4	Reverse gear signal (+ 12 V)
5	Warning light control
6	Rear buzzer earth
7	Vehicle speed signal
8	Diagnostic line K
9	+ 12 V rear sensors
10	Rear sensors earth
11	Not used
12	Function activation or cut-off signal
13	Rear right-hand inner sensor signal
14	Rear left-hand inner sensor signal
15	Rear left-hand outer sensor signal
16	Rear right-hand outer sensor signal
Beige 12-track connector	
1	Multiplex line L
2	Front right-hand outer sensor signal
3	Front left-hand inner sensor signal
4	Front right-hand outer sensor signal
5	Front left-hand outer sensor signal
6	Not used
7	Front sensors earth
8	Multiplex line H
9	Not used
10	Not used
11	Front buzzer earth
12	+ 12 V front sensors feed

GETtheMANUALS.org

Replacing the parking distance control computer

BEFORE REPLACING ANY COMPUTER IT IS ESSENTIAL THAT YOU CONTACT TECHLINE.

When replacing the computer, apply the following procedure:

- switch off the ignition,
- replace the computer,
- configure the vehicle identification using command **CF005 Vehicle identification** (refer to **Configuration and Programming**),
- configure the buzzer volume and the tone setting using **commands CF001 Buzzer volume, CF006 Tone setting, CF007 Front buzzer volume and CF009 Front buzzer tone setting** (refer to **Configuration and Programming**),
- enter the last After-Sales operation date using command **VP006 Enter last After-Sales operation date**,
- enter the VIN with the diagnostic tool command **VP001 Enter VIN**,
- check that the system is operating correctly and make sure that there are no faults.

GETtheMANUALS.org

CONFIGURATIONS AFTER REPLACING A COMPUTER

After replacing the computer, configure the parking distance control computer with the vehicle type using configuration **CF005 Vehicle identification** (repair mode menu, diagnostic tool configuration function).
The configuration adapts the sensors' detection field to the type of body.
Depending on a vehicle's gearbox type (automatic or manual), the parking distance control can be delayed from working. Activation of the parking distance control is indicated by a **brief 0.5 second activation sound** (vehicle in reverse gear). On vehicles with an automatic transmission, the **3-second** delay prevents the activation noise from sounding every time the driver shifts from Park to Drive.

After having configured the computer, check that the configuration has taken effect by reading the configuration **LC005 Vehicle identification**.

SETTING OPTIONS

The volume and the tone of the buzzer can be changed if the customer desires.
- Configuration **CF001 Buzzer volume** is used to adjust the **volume** of the buzzer.
- Configuration **CF007 Front buzzer volume** is used to adjust the **volume** of the front buzzer.
- Configuration function **CF006 Tone setting** is used to adjust the **tone** of the rear buzzer.
- Configuration function **CF009 Front tone setting** is used to adjust the **tone** of the front buzzer.

- After configuring the computer, check that the configurations have registered correctly using the configuration readings **LC001 Buzzer volume, LC006 Tone setting, LC007 Front buzzer volume** and **LC009 Adjusting the front tone**.

Configuration	Configuration reading	Name of configuration
CF001	LC001	Buzzer volume
CF005	LC005	Vehicle identification
CF006	LC006	Tone setting
CF007	LC007	Front buzzer volume
CF009	LC009	Front tone setting

GETtheMANUALS.org

Procedure to follow for modifying these configurations:

- Establish dialogue with the computer.
- Select the **Repair mode** menu.
- Select the **Write configuration** menu.
- Select the line corresponding to the configuration to be modified.
- In the drop-down menu, select the line corresponding to the vehicle and customer selection.
- Click on **Confirm**.
- Exit diagnostic mode (ends dialogue with the computer without switching off the tool), switch off the ignition for 5 seconds and then switch the ignition back on.
- Establish dialogue with the computer.
- In the **Read configuration** menu, check that the configuration has been completed.

Special note:

If a vehicle is equipped with a caravan towbar and if there is a continuous beeping noise, take the towbar out of the detection field for the rear sensors, run the command for parameter **VP003 Caravan towbar distance**: increase the detection area centimetre by centimetre. To avoid impairing the detection, the parameter **PR026 Caravan towbar distance** must not exceed 40 cm.

GETtheMANUALS.org

Summary of sensors and actuators on which fault finding can be performed by the parking distance control computer (with corresponding Design Office codes)

Tool fault	Associated DTC	Diagnostic tool title
DF002	**9001**	Left-hand outer sensor
DF003	**9002**	Left-hand inner sensor
DF004	**9004**	Right-hand outer sensor
DF005	**9003**	Right-hand inner sensor
DF006	**9006**	Buzzer
DF008	**9005**	Computer fault
DF012	**9009**	Parking proximity sensor switch indicator light
DF013	**900A**	Front left-hand outer sensor
DF014	**900B**	Front left-hand inner sensor
DF015	**900C**	Front right-hand inner sensor
DF016	**900D**	Front right-hand outer sensor
DF017	**900E**	Front buzzer volume

GETtheMANUALS.org

DF002 PRESENT OR STORED	LEFT-HAND OUTER SENSOR CC.1 : Short circuit to + 12 V CO.0 : Open circuit or short circuit to earth 1.DEF : Internal electronic fault

NOTES	**Conditions for applying the fault finding procedure to stored faults:** The fault is declared present following selection of reverse gear if the parking distance control function is **ACTIVE**: the parking distance control indicator light is not lit; refer to status interpretation **ET003 parking distance control function**.
	Special notes: This fault is indicated by the buzzer (a **5 second** warning sound) and the system shuts down.

Switch off the ignition and disconnect the computer's **16-track connector**.
Measure the computer's internal resistances:

- Between **track 15** and **track 9** a resistance of **215 kΩ ± 10 kΩ**.
- Between **track 15** and **track 10** a resistance of **100 kΩ ± 5 kΩ**.

If the readings do not match the above values, or if there is a short circuit between the specified tracks, contact your Techline.

Remove the rear bumper and disconnect the **3-track** connector on the left-hand outer sensor.
Check the condition of the sensor connector. Replace the connector if necessary.
Measure the resistance between **track 2** (signal) and **track 1** (supply) of the sensor. Replace the sensor if the resistance is not infinite.
Measure the resistance between **track 2** (signal) and **track 3** (earth) of the sensor. Replace the sensor if the resistance is not **40 kΩ ± 5 kΩ** (wait a few seconds for the reading to stabilise).

Switch off the ignition, and disconnect the parking proximity sensor computer to check the **insulation, continuity and the absence of interference resistance** on the following connections:

16-track parking distance control computer connector		Left-hand outer sensor
Track 9	→	**Track 1**
Track 15	→	**Track 2**
Track 10	→	**Track 3**

Repair if necessary (refer to vehicle wiring diagrams).

If the fault is still present, replace the left-hand outer sensor.

AFTER REPAIR	Clear the stored faults. Follow the instructions to confirm repair. Deal with any other faults.

GETtheMANUALS.org

DF003 PRESENT OR STORED	LEFT-HAND INNER SENSOR CC.1 : Short circuit to + 12 V CO.0 : Open circuit or short circuit to earth 1.DEF : Internal electronic fault

NOTES	**Conditions for applying the fault finding procedure to stored faults:** The fault is declared present following selection of reverse gear if the parking distance control function is **ACTIVE**: the parking distance control indicator light is not lit; refer to status interpretation **ET003 parking distance control function**.
	Special notes: This fault is indicated by the buzzer (a **5 second** warning sound) and the system shuts down.

Switch off the ignition and disconnect the computer's **16-track connector**.
Measure the computer's internal resistances:

- Between **track 14** and **track 9** a resistance of **215 kΩ ± 10 kΩ**.
- Between **track 14** and **track 10** a resistance of **100 kΩ ± 5 kΩ**.

If the readings do not match the above values, or if there is a short circuit between the specified tracks, contact your Techline.

Remove the rear bumper and disconnect the **3-track** connector on the left-hand inner detection sensor.
Check the condition of the sensor connector. Replace the connector if necessary.
Measure the resistance between **track 2** (signal) and **track 1** (supply) of the sensor. Replace the sensor if the resistance is not infinite.
Measure the resistance between **track 2** (signal) and **track 3** (earth) of the sensor. Replace the sensor if the resistance is not **40 kΩ ± 5 kΩ** (wait a few seconds for the reading to stabilise).

Switch off the ignition, and disconnect the parking proximity sensor computer to check the **insulation, continuity and the absence of interference resistance** on the following connections:

16-track parking distance control computer connector		Left-hand inner sensor
Track 9	→	**Track 1**
Track 14	→	**Track 2**
Track 10	→	**Track 3**

Repair if necessary (refer to vehicle wiring diagrams).

If the fault is still present, replace the left-hand inner detection sensor.

AFTER REPAIR	Clear the stored faults. Follow the instructions to confirm repair. Deal with any other faults.

GETtheMANUALS.org

DF004 PRESENT OR STORED	RIGHT-HAND OUTER SENSOR CC.1 : Short circuit to + 12 V CO.0 : Open circuit or short circuit to earth 1.DEF : Internal electronic fault

NOTES	**Conditions for applying the fault finding procedure to stored faults:** The fault is declared present following selection of reverse gear if the parking distance control function is **ACTIVE**: the parking distance control indicator light is not lit; refer to status interpretation **ET003 parking distance control function**.
	Special notes: This fault is indicated by the buzzer (a **5 second** warning sound) and the system shuts down.

Switch off the ignition and disconnect the computer's **16-track connector**.
Measure the computer's internal resistances:

- Between **track 16** and **track 9** a resistance of **215 kΩ ± 10 kΩ**.
- Between **track 16** and **track 10** a resistance of **100 kΩ ± 5 kΩ**.

If the readings do not match the above values, or if there is a short circuit between the specified tracks, contact your Techline.

Remove the rear bumper and disconnect the **3-track** connector on the right-hand outer detection sensor.
Check the condition of the sensor connector. Replace the connector if necessary.
Measure the resistance between **track 2** (signal) and **track 1** (supply) of the sensor. Replace the sensor if the resistance is not infinite.
Measure the resistance between **track 2** (signal) and **track 3** (earth) of the sensor. Replace the sensor if the resistance is not **40 kΩ ± 5 kΩ** (wait a few seconds for the reading to stabilise).

With the ignition switched off, disconnect the parking proximity sensor computer connector to check the **insulation, continuity and the absence of interference resistance** on the following connections:

16-track parking distance control computer connector		Right-hand outer sensor
Track 9	→	**Track 1**
Track 16	→	**Track 2**
Track 10	→	**Track 3**

Repair if necessary (refer to vehicle wiring diagrams).

If the fault is still present, replace the right-hand outer detection sensor.

AFTER REPAIR	Clear the stored faults. Follow the instructions to confirm repair. Deal with any other faults.

GETtheMANUALS.org

DF005 PRESENT OR STORED	RIGHT-HAND INNER SENSOR CC.1 : Short circuit to + 12 V CO.0 : Open circuit or short circuit to earth 1.DEF : Internal electronic fault

NOTES	**Conditions for applying the fault finding procedure to stored faults:** The fault is declared present following selection of reverse gear if the parking distance control function is **ACTIVE**: the parking distance control indicator light is not lit; refer to status interpretation **ET003 parking distance control function**.
	Special notes: This fault is indicated by the buzzer (a **5 second** warning sound) and the system shuts down.

Switch off the ignition and disconnect the computer's **16-track connector**.
Measure the computer's internal resistances:
- Between **track 13** and **track 9** a resistance of **215 kΩ ± 10 kΩ**.
- Between **track 13** and **track 10** a resistance of **100 kΩ ± 5 kΩ**.

If the readings do not match the above values, or if there is a short circuit between the specified tracks, contact your Techline.

Remove the rear bumper and disconnect the **3-track** connector on the right-hand inner detection sensor.
Check the condition of the sensor connector. Replace the connector if necessary.
Measure the resistance between **track 2** (signal) and **track 1** (supply) of the sensor. Replace the sensor if the resistance is not infinite.
Measure the resistance between **track 2** (signal) and **track 3** (earth) of the sensor. Replace the sensor if the resistance is not **40 kΩ ± 5 kΩ** (wait a few seconds for the reading to stabilize).

With the ignition switched off, disconnect the parking proximity sensor computer connector to check the **insulation, continuity and the absence of interference resistance** on the following connections:

16-track parking distance control computer connector		Right-hand inner sensor
Track 9	→	**Track 1**
Track 13	→	**Track 2**
Track 10	→	**Track 3**

Repair if necessary (refer to vehicle wiring diagrams).

If the fault is still present, replace the right-hand inner detection sensor.

AFTER REPAIR	Clear the stored faults. Follow the instructions to confirm repair. Deal with any other faults.

GETtheMANUALS.org

DF006 PRESENT OR STORED	BUZZER CC.1 : Short circuit to + 12 V CO.0 : Open circuit or short circuit to earth

NOTES	**Conditions for applying the fault finding procedure to stored faults:** The fault is declared present following selection of reverse gear if the parking distance control function is **ACTIVE**: the parking distance control indicator light is not lit; refer to status interpretation **ET003 parking distance control function**.
	Special notes: The fault is indicated by the absence of the **1-second** beep normally emitted by the buzzer when reverse gear is selected.

Switch off the ignition and disconnect the computer's **16-track connector**.
Measure the internal resistance of the computer between **tracks 2 and 6**.
If the value read is not **314 Ω ± 10%** or if there is a short circuit between the specified tracks, contact Techline.

Check **the connection and condition of the connector** on the buzzer.
Replace the connector if necessary.

Switch off the ignition, and disconnect the parking proximity sensor computer to check the **insulation, continuity and the absence of interference resistance** on the following connections:

16-track parking distance control computer connector		Buzzer
Track 2	→	**Track 2**
Track 6	→	**Track 1**

Repair if necessary (refer to vehicle wiring diagrams).

Measure the buzzer resistance between **tracks 1 and 2**.
Replace the buzzer if its resistance is not approximately **48 Ω**.

If the fault is still present, replace the buzzer.

AFTER REPAIR	Clear the stored faults. Follow the instructions to confirm repair. Deal with any other faults.

GETtheMANUALS.org

DF008 PRESENT OR STORED	COMPUTER FAULT 1.DEF : Internal electronic fault 2.DEF : Speed signal incoherence 3.DEF : Internal electronic fault

NOTES	**Conditions for applying the fault finding procedure to stored faults:** The fault reappears present or stored after its has been cleared, the ignition is switched on and off again and reverse gear is selected.
	Special notes: If the fault is present and is represented by **1.DEF** or **2.DEF**, the system operates in defect mode (substitute values are used). If the fault is present and characterised **3.DEF** and the buzzer fails to sound when shifting into reverse, contact your Techline.

1.DEF	***NOTES***	**Special notes:** None

After following the instructions, if the fault recurs, switch off the ignition and disconnect the parking proximity sensor computer supply fuse (see vehicle diagram).
Reconnect the fuse, switch the ignition back on, and perform a fault reading.

If the fault recurs, check **the connections and condition** of the parking proximity sensor computer connector (no damage to the connections).
Repair if necessary.

With the ignition switched off, disconnect the parking proximity sensor computer connector to check the **conformity of the feeds** and to check the **insulation, continuity and the absence of interference resistance** on the following connections:

16-track parking distance control computer connector

Track 1	→	+ after ignition feed
Track 3	→	earth

Repair if necessary (refer to vehicle wiring diagrams).

If the fault is still present, contact the Techline.

2.DEF	***NOTES***	**Special notes:** None

Perform fault finding on the whole ABS system using the diagnostic tool.

AFTER REPAIR	Clear the stored faults. Follow the instructions to confirm repair. Deal with any other faults.

GETtheMANUALS.org

DF012 PRESENT OR STORED	PARKING PROXIMITY SENSOR SWITCH INDICATOR LIGHT CC.0 : short circuit to earth CC.1 : short circuit to + 12 V

NOTES	**Conditions for applying the fault finding procedure to stored faults:** A fault is declared present after reverse gear is engaged and the parking distance control deactivation switch is pressed.

Remove the parking proximity sensor switch and check the connections and condition of its connector.
Repair if necessary.

Check for an earth on **track B3** of the parking proximity sensor switch connector.
Repair if necessary.

With the ignition off, disconnect the parking proximity sensor computer to check the **insulation, continuity and the absence of interference resistance** on the following connection:

Parking proximity sensor switch connector		16-track parking distance control computer connector
Track B2	⟶	**Track 5**

Repair if necessary.

If the fault is still present, replace the parking proximity sensor switch.

AFTER REPAIR	Clear the stored faults. Follow the instructions to confirm repair. Deal with any other faults.

GETtheMANUALS.org

DF013 PRESENT OR STORED	FRONT LEFT-HAND OUTER SENSOR CC.1 : Short circuit to + 12 V CO.0 : Open circuit or short circuit to earth 1.DEF : Internal electronic fault

NOTES	**Conditions for applying the fault finding procedure to stored faults:** The fault is declared present following selection of reverse gear if the parking distance control function is **ACTIVE**: the parking distance control indicator light is not lit, refer to status interpretation **ET003 Parking distance control function**.
	Special notes: This fault is indicated by the buzzer (a **5 second** warning sound) and the system shuts down.

Switch off the ignition and disconnect the computer's **12-track** connector
Measure the computer's internal resistances:
- Between **track 12** and **track 5** a resistance of **215 kΩ ± 10 kΩ**.
- Between **track 5** and **track 7** a resistance of **100 kΩ ± 5 kΩ**.

If the readings do not match the above values, or if there is a short circuit between the specified tracks, contact your Techline.

Remove the rear bumper and disconnect the **3-track** front left-hand outer detection sensor connector.
Check the condition of the sensor connector. Replace the connector if necessary.
Measure the resistance between **track 2** (signal) and **track 1** (supply) of the sensor. Replace the sensor if the resistance is not infinite.
Measure the resistance between **track 2** (signal) and **track 3** (earth) of the sensor. Replace the sensor if the resistance is not **40 kΩ ± 5 kΩ** (wait a few seconds for the reading to stabilise).

Switch off the ignition, and disconnect the parking proximity sensor computer to check the **insulation, continuity and the absence of interference resistance** on the following connections:

Parking distance control computer 12-track connector		Front left-hand outer sensor
Track 12	→	**Track 1**
Track 5	→	**Track 2**
Track 7	→	**Track 3**

Repair if necessary (refer to vehicle wiring diagrams).

If the fault is still present, replace the left-hand outer sensor.

AFTER REPAIR	Clear the stored faults. Follow the instructions to confirm repair. Deal with any other faults.

GETtheMANUALS.org

DF014 PRESENT OR STORED	FRONT LEFT-HAND INNER SENSOR CC.1 : Short circuit to + 12 V CO.0 : Open circuit or short circuit to earth 1.DEF : Internal electronic fault

NOTES	**Conditions for applying the fault finding procedure to stored faults:** The fault is declared present following selection of reverse gear if the parking distance control function is **ACTIVE**: the parking distance control indicator light is not lit, refer to status interpretation **ET003 Parking distance control function**.
	Special notes: This fault is indicated by the buzzer (a **5 second** warning sound) and the system shuts down.

Switch off the ignition and disconnect the computer's **12-track** connector
Measure the computer's internal resistances:
- Between **track 12** and **track 3** a resistance of **215 kΩ ± 10 kΩ**.
- Between **track 3** and **track 7** a resistance of **100 kΩ ± 5 kΩ**.

If the readings do not match the above values, or if there is a short circuit between the specified tracks, contact your Techline.

Remove the rear bumper and disconnect the **3-track** front left-hand inner detection sensor connector.
Check the condition of the sensor connector. Replace the connector if necessary.
Measure the resistance between **track 2** (signal) and **track 1** (supply) of the sensor. Replace the sensor if the resistance is not infinite.
Measure the resistance between **track 2** (signal) and **track 3** (earth) of the sensor. Replace the sensor if the resistance is not **40 kΩ ± 5 kΩ** (wait a few seconds for the reading to stabilise).

Switch off the ignition, and disconnect the parking proximity sensor computer to check the **insulation, continuity and the absence of interference resistance** on the following connections:

Parking distance control computer 12-track connector		Front left-hand inner sensor
Track 12	→	**Track 1**
Track 3	→	**Track 2**
Track 7	→	**Track 3**

Repair if necessary (refer to vehicle wiring diagrams).

If the fault is still present, replace the left-hand outer sensor.

AFTER REPAIR	Clear the stored faults. Follow the instructions to confirm repair. Deal with any other faults.

GETtheMANUALS.org

DF015 PRESENT OR STORED	FRONT RIGHT-HAND INNER SENSOR CC.1 : Short circuit to + 12 V CO.0 : Open circuit or short circuit to earth 1.DEF : Internal electronic fault

NOTES	**Conditions for applying the fault finding procedure to stored faults:** The fault is declared present following selection of reverse gear if the parking distance control function is **ACTIVE**: the parking distance control indicator light is not lit, refer to status interpretation **ET003 Parking distance control function**.
	Special notes: This fault is indicated by the buzzer (a **5 second** warning sound) and the system shuts down.

Switch off the ignition and disconnect the computer's **12-track** connector
Measure the computer's internal resistances:
- Between **track 12** and **track 2** a resistance of **215 kΩ ± 10 kΩ**.
- Between **track 2** and **track 7** a resistance of **100 kΩ ± 5 kΩ**.

If the readings do not match the above values, or if there is a short circuit between the specified tracks, contact your Techline.

Remove the rear bumper and disconnect the **3-track** front left-hand inner detection sensor connector.
Check the condition of the sensor connector. Replace the connector if necessary.
Measure the resistance between **track 2** (signal) and **track 1** (supply) of the sensor. Replace the sensor if the resistance is not infinite.
Measure the resistance between **track 2** (signal) and **track 3** (earth) of the sensor. Replace the sensor if the resistance is not **40 kΩ ± 5 kΩ** (wait a few seconds for the reading to stabilise).

Switch off the ignition, and disconnect the parking proximity sensor computer to check the **insulation, continuity and the absence of interference resistance** on the following connections:

Parking distance control computer 12-track connector		Front right-hand inner sensor
Track 12	→	**Track 1**
Track 2	→	**Track 2**
Track 7	→	**Track 3**

Repair if necessary (refer to vehicle wiring diagrams).

If the fault is still present, replace the left-hand outer sensor.

AFTER REPAIR	Clear the stored faults. Follow the instructions to confirm repair. Deal with any other faults.

GETtheMANUALS.org

DF016 PRESENT OR STORED	FRONT RIGHT-HAND OUTER SENSOR CC.1 : Short circuit to + 12 V CO.0 : Open circuit or short circuit to earth 1.DEF : Internal electronic fault

NOTES	**Conditions for applying the fault finding procedure to stored faults:** The fault is declared present following selection of reverse gear if the parking distance control function is **ACTIVE**: the parking distance control indicator light is not lit, refer to status interpretation **ET003 Parking distance control function**.
	Special notes: This fault is indicated by the buzzer (a **5 second** warning sound) and the system shuts down.

Switch off the ignition and disconnect the computer's **16-track connector**.
Measure the computer's internal resistances:
- Between **track 12** and **track 4** a resistance of **215 kΩ ± 10 kΩ**.
- Between **track 4** and **track 7** a resistance of **100 kΩ ± 5 kΩ**.

If the readings do not match the above values, or if there is a short circuit between the specified tracks, contact your Techline.

Remove the rear bumper and disconnect the **3-track** front left-hand inner detection sensor connector.
Check the condition of the sensor connector. Replace the connector if necessary.
Measure the resistance between **track 2** (signal) and **track 1** (supply) of the sensor. Replace the sensor if the resistance is not infinite.
Measure the resistance between **track 2** (signal) and **track 3** (earth) of the sensor. Replace the sensor if the resistance is not **40 kΩ ± 5 kΩ** (wait a few seconds for the reading to stabilise).

Switch off the ignition, and disconnect the parking proximity sensor computer to check the **insulation, continuity and the absence of interference resistance** on the following connections:

Parking proximity sensor computer		Front right-hand outer sensor
Track 12	→	**Track 1**
Track 4	→	**Track 2**
Track 7	→	**Track 3**

Repair if necessary (refer to vehicle wiring diagrams).

If the fault is still present, replace the left-hand outer sensor.

AFTER REPAIR	Clear the stored faults. Follow the instructions to confirm repair. Deal with any other faults.

GETtheMANUALS.org

DF017 PRESENT OR STORED	FRONT BUZZER CC.1 : Short circuit to + 12 V CO.0 : Open circuit or short circuit to earth

NOTES	**Conditions for applying the fault finding procedure to stored faults:** The fault is declared present following selection of reverse gear if the parking distance control function is **ACTIVE**: the parking distance control indicator light is not lit, refer to status interpretation **ET003 Parking distance control function**.

Switch off the ignition and disconnect the **12-track** and **16-track** computer connectors.
Measure the internal resistance of the computer between **track 2 of the 16-track connector and track 11 of the 12-track connector**.
If the value read is not **314 Ω ± 10%** or if there is a short circuit between the specified tracks, contact Techline.

Check **the connection and condition of the connector** of the front buzzer.
Replace the connector if necessary.

Switch off the ignition, and disconnect the parking proximity sensor computer to check the **insulation, continuity and the absence of interference resistance** on the following connections:

Parking proximity sensor computer		Front buzzer volume
Track 2 of the 16-track connector	→	**Track 2**
Track 11 of the 12-track connector	→	**Track 1**

Repair if necessary (refer to vehicle wiring diagrams).

Measure the front buzzer resistance value between **tracks 1 and 2**.
Replace the buzzer if its resistance is not approximately **48 Ω**.

If the fault is still present, replace the buzzer.

AFTER REPAIR	Clear the stored faults. Follow the instructions to confirm repair. Deal with any other faults.

GETtheMANUALS.org

NOTES	Only carry out this conformity check after a complete check with the diagnostic tool. **Conditions for applying the fault finding procedure:** ignition on.

Order	Function	Parameter or Status checked or Action		Display and notes	Fault finding
1	Parking proximity sensor system status	**ET003:**	Parking proximity sensor function	**READY** (system operation and ready to detect). **SUSPENDED** (if the system is temporarily deactivated). **OFF** (if the system is completely switched off)	For further information or, if there is a fault, consult the interpretation of status **ET003**.
2	Feeds	**PR006:**	Sensor supply voltage	**10.5 V < X <14.4 V**	If there is a fault with this parameter, check the **insulation, continuity and the absence of interference resistance** on the computer power supply and earth (refer to wiring diagram).
		PR020:	Computer feed voltage	**10.5 V < X <14.4 V**	If there is a fault with this parameter, check the **insulation, continuity and the absence of interference resistance** on the computer power supply and earth (see wiring diagram). If the fault is still present, carry out **fault finding on the charge circuit**.
3	Reverse gear selection	**ET001:**	Reverse gear engaged	**YES** **NO**	If there is a fault, refer to the interpretation of status **ET001**.
4	Buzzer control	**ET002:**	Buzzer control	**ACTIVE** when the buzzer sounds. **INACTIVE** if not.	In the event of a fault, consult the interpretation of status **ET002**.

GETtheMANUALS.org

NOTES	Only carry out this conformity check after a complete check with the diagnostic tool. **Conditions for applying the fault finding procedure:** ignition on.

Order	Function	Parameter or Status checked or Action	Display and notes	Fault finding
5	Caravan towbar detection area	**PR026:** Caravan towing distance	**By default:** 35 cm Above 40 cm, the function becomes weaker, (Adjust the detection area of the rear centre sensors so that the caravan towbar is not detected).	In the event of a fault, check the positioning of the caravan towbar protection.
6	Deactivation time if **S = 0 mph**	**PR027:** Time before deactivation	Deactivation is detected after **5 s** if the system detects the same obstacle at the same distance	
7	Maximum detection distance	**PR028:** Maximum limit	**0 mph < Speed < 30 mph (50 km/h)**	

GETtheMANUALS.org

NOTES	Only carry out this conformity check after a complete check with the diagnostic tool. **Conditions for applying the fault finding procedure:** ignition on.

Order	Function	Parameter or Status checked or Action		Display and notes	Fault finding
8	Proximity sensors	**PR001:**	Left-hand outer sensor distance	**20 cm < X < 150 cm** depending on the proximity of the obstacle (out of detection range: **255 cm**).	If there is a fault, refer to the interpretation of parameter **PR001**.
		PR002:	Left-hand inner sensor distance	**20 cm < X < 150 cm** depending on the proximity of the obstacle (out of detection range: **255 cm**).	If there is a fault, refer to the interpretation of parameter **PR002**.
		PR003:	Right-hand outer sensor distance	**20 cm < X < 150 cm** depending on the proximity of the obstacle (out of detection range: **255 cm**).	If there is a fault, consult the interpretation of parameter **PR003**.
		PR004:	Right-hand inner sensor distance	**20 cm < X < 150 cm** depending on the proximity of the obstacle (out of detection range: **255 cm**).	If there is a fault, refer to the interpretation of parameter **PR004**.
		PR005:	Shortest distance calculated	**20 cm < X < 150 cm** depending on the proximity of the obstacle (out of detection range: **255 cm**).	If there is a fault, refer to the interpretation of parameter **PR005**.
		PR021:	Front left-hand outer sensor distance	**20 cm < X < 90 cm** depending on the proximity of the obstacle (out of detection range: **255 cm**).	If there is a fault, refer to the interpretation of parameter **PR021**.
		PR022:	Front left-hand inner sensor distance	**20 cm < X < 90 cm** depending on the proximity of the obstacle (out of detection range: **255 cm**).	If there is a fault, refer to the interpretation of parameter **PR022**.
		PR023	Front right-hand inner sensor distance	**20 cm < X < 90 cm** depending on the proximity of the obstacle (out of detection range: **255 cm**).	If there is a fault, refer to the interpretation of parameter **PR023**.
		PR024:	Front right-hand outer sensor distance	**20 cm < X < 90 cm** depending on the proximity of the obstacle (out of detection range: **255 cm**).	If there is a fault, refer to the interpretation of parameter **PR024**.
		PR025:	Shortest front distance calculated	**20 cm < X < 150 cm** depending on the proximity of the obstacle (out of detection range: **255 cm**).	If there is a fault, refer to the interpretation of parameter **PR025**.

GETtheMANUALS.org

Tool status	Diagnostic tool title
ET001	Reverse gear engaged
ET003	Parking proximity sensor function

GETtheMANUALS.org

ET001	REVERSE GEAR ENGAGED

NOTES	**Special note:** Only carry out the checks if the **YES** and **NO** statuses are not consistent with the position of the gear lever.

Check that the reversing lights are working correctly: they should come on when reverse gear is selected and go out when it is not.

If the reversing lights fail to function as specified:
With the ignition switched off, disconnect the parking proximity sensor computer connector to check the **insulation** (to + 12 V), **and the continuity and the absence of interference resistance** on the following connection:

Parking proximity sensor computer connector		Rear light connector in luggage compartment
Track 4	→	**Track 2 (right-hand lights)**
Track 4	→	**Track 4 (left-hand lights)**

Repair if necessary.

AFTER REPAIR	Repeat the conformity check from the start.

GETtheMANUALS.org

ET003	PARKING PROXIMITY SENSOR FUNCTION

NOTES	**Special notes:** If the parking proximity sensor system is suspended or deactivated, the parking proximity sensor switch indicator light comes on.

This status indicates whether the parking proximity sensor system is on or off:

ET003 READY	This means that, when reversing, the parking proximity sensor detects obstacles and the buzzer sounds (the parking proximity sensor switch indicator light goes out).
ET003 SUSPENDED	This means the parking proximity sensor system is switched off (no detection possible). The suspension is **temporary** because the parking proximity sensor system will come back on after the ignition is switched off and on. To suspend or reactivate the system manually, **briefly** press (1 second) the parking distance control switch.
ET003 DEACTIVATED	This means the parking proximity sensor system is switched off (no detection possible). This suspension is **permanent** (switching the + after ignition feed off and on again will not reactivate the system). To deactivate or reactivate the system manually, **press and hold** the parking distance control switch (3 seconds).

If the status is not as specified, check for an **earth** on **track A2** of the parking proximity sensor switch. Repair if necessary.

With the ignition off, disconnect the parking distance control switch to check the **insulation** (to earth and + 12 V), **continuity and absence of interference resistance** on the following connection:

Parking proximity sensor switch connector		16-track parking distance control computer connector
Track B1	→	**Track 12**

Repair if necessary

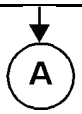

AFTER REPAIR	Repeat the conformity check from the start.

GETtheMANUALS.org

ET003 **CONTINUED**	

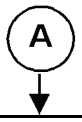

If the connection just checked is OK (no open or short circuit), and there is an **earth** on **track A2** of the switch but the fault is still present, check the switch operation with an ohmmeter.
Switch not pressed: **insulation** between **track A2** and **B1**.
Switch pressed: **continuity** between **track A2** and **B1**.
Replace the parking proximity sensor switch if it fails to function as specified.

AFTER REPAIR	Repeat the conformity check from the start.

GETtheMANUALS.org

Tool parameter	Diagnostic tool title
PR001	Left-hand outer sensor distance
PR002	Left-hand inner sensor distance
PR003	Right-hand outer sensor distance
PR004	Right-hand inner sensor distance
PR005	Shortest distance calculated
PR006	Sensor supply voltage
PR020	Computer feed voltage
PR021	Front left-hand outer sensor distance
PR022	Front left-hand inner sensor distance
PR023	Front right-hand inner sensor distance
PR024	Front right-hand outer sensor distance
PR025	Shortest front distance calculated
PR026	Caravan towing distance
PR027	Time before deactivation
PR028	Maximum limit

GETtheMANUALS.org

PR001 **PR002** **PR003** **PR004**	LEFT-HAND OUTER SENSOR DISTANCE LEFT-HAND INNER SENSOR DISTANCE RIGHT-HAND OUTER SENSOR DISTANCE RIGHT-HAND INNER SENSOR DISTANCE

NOTES	**Special notes:** Before searching for a fault with these parameters, make sure no fault is present or stored. If there is a fault, apply the interpretation procedure for the fault detected by the diagnostic tool.
	Note: The ultrasonic sensors are very fragile. Therefore, when removing the rear bumper, be careful not to scratch them. An obstacle more than 150 cm away cannot be detected, the value of the parameters is therefore 255 cm. For an obstacle which is between 20 and 150 cm away, the value of the parameters is the distance to the obstacle. For an obstacle which is closer than 20 cm away, the value of the parameters is 0.

Using the configuration reading screen on the diagnostic tool (repair mode menu), check that the parking proximity sensor system is correctly configured for the type of body to which it is fitted (**LC005 Vehicle identification** Vel Satis, Espace, Automatic or manual gearbox).
If necessary, reconfigure the computer using command **CF005 Vehicle identification**.

With the vehicle near an obstacle (20 to 150 cm), make sure the real distance matches the value displayed by the diagnostic tool (**PR001** to **PR004**).
If the distance is inconsistent or if the distance parameters remain at 255 cm, make sure nothing is interfering with the reading (sticker, mud, snow etc. on the rear bumper).

If the distances displayed by the sensors seem wrong or 255 cm is displayed continuously, check the condition of the sensor(s). There must be no scratches on the detection component (outer metal section) of the sensors. Replace the defective sensor.

If the fault is still present, apply the fault finding procedure to the sensor whose distance parameter is incorrect (even if the diagnostic tool does not report a fault).

AFTER REPAIR	Repeat the conformity check from the start.

GETtheMANUALS.org

PR005	SHORTEST DISTANCE CALCULATED

NOTES	**Special notes:** Before searching for a fault with this parameter, make sure that no fault is present or stored. If this is not the case, apply the interpretation of the fault displayed by the diagnostic tool
	Note: The ultrasonic sensors are very fragile. Therefore, when removing the rear bumper, be careful not to scratch them. **This parameter is an average calculated by the computer when an obstacle is placed between two sensors.** An obstacle more than 150 cm away cannot be detected, the value of the parameter is therefore 255 cm. When the distance is under 30 cm, the estimated distance is displayed as 0 cm (critical detection zone with constant buzzer).

Using the diagnostic tool's configuration reading screen check that the parking proximity system is properly configured for the type of body to which it is fitted (**LC005 Vehicle identification**: Vel Satis, Espace Automatic or Manual gearbox) If necessary, reconfigure the computer using command **CF005 Vehicle identification**.
With the vehicle near an obstacle (0 to 150 cm), see if the calculated distance is accurate. If the distance is inconsistent or if the parameter remains at 255 cm, ensure that nothing is interfering with the measurement (sticker, mud or snow, etc. on the rear bumper).
If the calculated distance is still inconsistent or if it displays 255 cm continuously, check the condition of the sensors. There must be no scratches on the detection component (outer metal section) of the sensors. Replace the defective sensor.
If the fault is still present, apply the fault finding procedure to the sensor whose distance parameter is incorrect (even if the diagnostic tool does not report a fault).

AFTER REPAIR	Repeat the conformity check from the start.

GETtheMANUALS.org

PR025	SHORTEST FRONT DISTANCE CALCULATED

NOTES	**Special notes:** Before searching for a fault with this parameter, make sure that no fault is present or stored. If there is a fault, apply the interpretation procedure for the fault detected by the diagnostic tool.
	Note: The ultrasonic sensors are very fragile. When removing the front bumper, be careful not to scratch the ultrasonic sensors. **This parameter is an average calculated by the computer when an obstacle is placed between two sensors.** When the distance is under 30 cm, the estimated distance is displayed as 0 cm (critical detection zone with constant buzzer).

Using the diagnostic tool's configuration reading screen check that the parking proximity system is properly configured for the type of body to which it is fitted (**LC005 Vehicle identification**: Vel Satis, Espace Automatic or Manual gearbox) If necessary, reconfigure the computer using command **CF005 Vehicle identification**.
With the vehicle near an obstacle (0 to 150 cm), see if the calculated distance is accurate. If the distance is inconsistent or if the parameter remains at 255 cm, ensure that nothing is interfering with the measurement (sticker, mud or snow, etc. on the rear bumper).
If the calculated distance is still inconsistent or if it displays 255 cm continuously, check the condition of the sensors. There must be no scratches on the detection component (outer metal section) of the sensors. Replace the defective sensor.
If the fault is still present, apply the fault finding procedure to the sensor whose distance parameter is incorrect (even if the diagnostic tool does not report a fault).

AFTER REPAIR	Repeat the conformity check from the start.

GETtheMANUALS.org

PR021 **PR022** **PR023** **PR024**	FRONT LEFT-HAND OUTER SENSOR DISTANCE FRONT LEFT-HAND INNER SENSOR DISTANCE FRONT RIGHT-HAND INNER SENSOR DISTANCE FRONT RIGHT-HAND OUTER SENSOR DISTANCE

NOTES	**Special notes:** Before searching for a fault with these parameters, make sure no fault is present or stored. If there is a fault, apply the interpretation procedure for the fault detected by the diagnostic tool.
	Note: The ultrasonic sensors are very fragile. When removing the front bumper, be careful not to scratch the ultrasonic sensors.

Using the configuration reading screen on the diagnostic tool (repair mode menu), check that the parking proximity sensor system is correctly configured for the type of body to which it is fitted (**LC005 Vehicle identification** Vel Satis, Espace, Automatic or manual gearbox). If necessary, reconfigure the computer using command **CF005 Vehicle identification**.
With the vehicle close to an obstacle (20 to 90 cm), make sure the distance matches the value displayed by the diagnostic tool (**PR021** to **PR024**). If the distance is not correct or if the distance parameter remains at 255 cm, make sure nothing is interfering with the reading (adhesive, mud, snow etc. on the front bumper)
If the distances displayed by the sensors seem wrong or 255 cm is displayed continuously, check the condition of the sensor(s). There must be no scratches on the detection component (outer metal section) of the sensors. Replace the defective sensor.
If the fault is still present, apply the fault finding procedure to the sensor whose distance parameter is incorrect (even if the diagnostic tool does not report a fault).

AFTER REPAIR	Repeat the conformity check from the start.

GETtheMANUALS.org

NOTES	**Only consult this customer complaint after a complete check with the diagnostic tool.**

NO DIALOGUE WITH THE COMPUTER → **ALP 1**

NO REAR BUZZER SIGNAL → **ALP 2**

NO FRONT BUZZER SIGNAL → **ALP 3**

CONTINUOUS REAR BUZZER SIGNAL (WITHOUT OBSTACLE DETECTION) → **ALP 4**

CONTINUOUS FRONT BUZZER SIGNAL (WITHOUT OBSTACLE DETECTION) → **ALP 5**

GETtheMANUALS.org

ALP 1	No dialogue with the computer

NOTES	None

Try the diagnostic tool on another vehicle.

Check:
– The connection between the diagnostic tool and the diagnostic socket (lead in good condition).
– The injection, engine and passenger compartment fuses.

Check for the presence of **+ 12 V battery** on **track 16,** and **+ 12 V after ignition feed** on **track 1** and an **earth** on **track 5** and on **track 4** of the diagnostic socket.
Repair if necessary.

Switch off the ignition, and disconnect the parking distance control computer to check the **insulation, continuity and the absence of interference resistance** on the following connections:

Parking distance control computer yellow connector

Track 1 ⟶ **+ Before ignition** (see vehicle diagram)
Track 3 ⟶ **Earth**

Parking distance control computer beige connector

Track 8 ⟶ **track 6** of the diagnostic socket (multiplex line H)
Track 1 ⟶ **track 14** of the diagnostic socket (CAN L)

Repair if necessary (refer to vehicle wiring diagrams).

AFTER REPAIR	Carry out a full check with the diagnostic tool.

GETtheMANUALS.org

ALP 2	No rear buzzer signal

NOTES	Only investigate this customer complaint **after a full check using the diagnostic tool** (no faults must be present or stored).

Using the diagnostic tool Main Data screen, check that the parking distance control system is on.
The status **ET003 Parking distance control function** must be **READY** and the red indicator light on the parking distance control switch must be off).

Is status ET003 READY?

NO → Switch on the parking distance control by pressing the switch for 1 or 3 seconds (the red indicator light should go out).
Note: for more details about system activation, see the interpretation of status **ET003**.

YES

Using the diagnostic tool's **main data** screen, check that reverse gear is selected.
The status **ET001 Reverse gear selected** should be **YES**
Also ensure that the reversing lights come on when reverse gear is selected.

Is status ET001 YES?

YES

Using the diagnostic tool configuration readings screen, check that the buzzer volume has not been switched off (**LC001 Buzzer volume** should not be **ZERO**).

Is the LC001 function ZERO

NO → Apply the interpretation of status ET001

NO

Check the connection and condition of the connector on the buzzer.
Replace the connector if necessary.

YES → Reconfigure the buzzer volume using the diagnostic tool (command **CF001 Buzzer volume**).

A

AFTER REPAIR	Check that the system is operating correctly.

GETtheMANUALS.org

ALP 2

CONTINUED

A

Using the parameter screen of the diagnostic tool (**PR001, PR002, PR003, PR004**), make sure the proximity sensors are detecting obstacles (between 20 and 150 cm).

Do the parameters specified above display distance values (with an obstacle in front of the rear bumper)?

NO → Apply the interpretation of parameters (**PR001, PR002, PR003, PR004**).

YES

Place an obstacle in front of the rear bumper to make the tool display a distance reading. During the detection process, make sure the buzzer has the correct power supply by taking a reading between **tracks 1** and **2** of the buzzer.

During this test, is the buzzer receiving power?

YES

Measure the resistance between the buzzer's two tracks. Replace the buzzer if its resistance is not approximately **48** Ω.

Is the fault still present?

YES

Replace the buzzer.

NO

End of fault finding

NO

Switch off the ignition, and disconnect the parking distance control computer to check the **insulation, continuity and the absence of interference resistance** on the following connections:

Parking proximity sensor computer beige connector → Buzzer

Track 2 → **Track 2**

Track 11 → **Track 1**

Is the fault still present?

NO

End of fault finding

YES

Contact the Techline.

AFTER REPAIR	Check that the system is operating correctly.

GETtheMANUALS.org

ALP 3	No front buzzer signal

NOTES	Only investigate this customer complaint **after a full check using the diagnostic tool** (no faults must be present or stored).

Using the diagnostic tool Main Data screen, check that the parking distance control system is on.
The status **ET003 Parking distance control function** must be **READY** and the red indicator light on the parking distance control switch must be off).

Is status ET003 READY?

NO → Switch on the parking distance control by pressing the switch for 1 or 3 seconds (the red indicator light should go out).
Note: for more details about system activation, see the interpretation of status **ET003**.

YES

Check the connection and condition of the connector on the buzzer.
Replace the connector if necessary.

A

AFTER REPAIR	Check that the system is operating correctly.

GETtheMANUALS.org

ALP 3
CONTINUED

A

Using the parameter screen of the diagnostic tool (**PR021, PR022, PR023, PR024**), check that the proximity sensors are detecting obstacles (between 20 and 60 cm).

Do the parameters specified above display distance values (with an obstacle in front of the rear bumper)?

NO → Apply the interpretation of parameters (**PR021, PR022, PR023, PR024**).

YES

Place an obstacle in front of the bumper to make the tool display a distance reading. During the detection process, make sure the buzzer has the correct power supply by taking a reading between **tracks 1** and **2** of the buzzer.

During this test, is the buzzer receiving power?

YES

Measure the resistance between the buzzer's two tracks. Replace the buzzer if its resistance is not approximately **48** Ω.

Is the fault still present?

YES

Replace the buzzer.

NO

End of fault finding procedure.

NO

Switch off the ignition, and disconnect the parking distance control computer to check the **insulation, continuity and the absence of interference resistance** on the following connections:

Parking distance control computer		Buzzer
Track 2 of the 16 track connector	→	Track 2
Track 11 of the 12-track connector	→	Track 1

Repair if necessary (see vehicle wiring diagrams).

Is the fault still present?

NO

End of fault finding procedure.

YES

Contact the Techline.

AFTER REPAIR	Check that the system is operating correctly.

AAPX73 ph2V1.1

GETtheMANUALS.org

ALP 4	Continuous rear buzzer signal (without obstacle detection)

NOTES	Only investigate this customer complaint **after a full check using the diagnostic tool** (no faults must be present or stored).

Is the vehicle fitted with a caravan towbar?

YES →

Check that the caravan towbar protection is correctly positioned.

Apply the parameter command **VP003 Caravan towbar distance**: increase the detection zone a centimetre at a time. To avoid impairing the detection, the parameter **PR026 Caravan towbar distance** must not exceed 40 cm.

NO ↓

With no obstacle less than 150 cm in front of the rear bumper, check that the distance parameters on the diagnostic tool are 255 cm out of range (**PR001, PR002, PR003, PR004**).
If those parameters display a distance value even though there is no obstacle in front of the rear bumper, make sure nothing is interfering with the reading (a sticker, mud, snow etc. on the rear bumper).
Repair if necessary.

Is the fault still present?

YES ↓

Switch off the ignition, and disconnect the parking distance control computer to check the **insulation, continuity and the absence of interference resistance** on the following connections:

Parking distance control computer		Buzzer
Track 2	→	**Track 1**
Track 6	→	**Track 2**

Note:
The line coming from **track 2** of the computer must be insulated against + 12 V and the line coming from **track 6** of the computer must be insulated against earth. Repair if necessary (see vehicle wiring diagram).

Is the fault still present?

NO → End of fault finding procedure.

↓

Contact the Techline.

End of fault finding procedure.

AFTER REPAIR	Check that the system is operating correctly.

GETtheMANUALS.org

ALP 5	Continuous front buzzer signal (without obstacle detection)

NOTES	Only investigate this customer complaint **after a full check using the diagnostic tool** (no faults must be present or stored).

With no obstacle less than 150 cm in front of the rear bumper, make sure the distance parameters on the diagnostic tool are 255 cm out of range (**PR021, PR022, PR023, PR024**).
If those parameters display a distance value even though there is no obstacle in front of the rear bumper, make sure nothing is interfering with the reading (a sticker, mud, snow etc. on the rear bumper).
Repair if necessary.

Is the fault still present?

YES

With the ignition switched off, disconnect the parking distance control computer connector to check the **insulation, continuity and absence of interference resistance** on the following connections:

Parking distance control computer — Buzzer

- **Track 2** of the 16-track connector → **Track 1**
- **Track 11** of the 12-track connector → **Track 2**

Note:
Note:
the line coming from track 2 of the 16-track connector of the computer must be insulated against **+ 12 V** and the line coming from **track 11 of the 12-track connector** of the computer must be insulated against earth.
Repair if necessary (see vehicle wiring diagram).

Is the fault still present?

NO → End of fault finding procedure.

Contact the Techline.

End of fault finding procedure.

AFTER REPAIR	Check that the system is operating correctly.

GETtheMANUALS.org

VEL SATIS

8 Electrical equipment

88B MULTIPLEX

Fault finding - Introduction	88B - 1
Fault finding - Allocation of computer tracks	88B - 4
Fault finding - Configuration	88B - 5
Fault finding - Interpretation of faults	88B - 7
Fault finding - Fault Finding Chart (ALP)	88B - 11

FEBRUARY 2006 **EDITION ANGLAISE**

"The repair procedures given by the manufacturer in this document are based on the technical specifications current when it was prepared.

The methods may be modified as a result of changes introduced by the manufacturer in the production of the various component units and accessories from which his vehicles are constructed."

All rights reserved by Renault s.a.s.

Copying or translating, in part or in full, of this document or use of the service part reference numbering system is forbidden without the prior written authority of Renault s.a.s.

© Renault s.a.s. 2006

GETtheMANUALS.org

INTRODUCTION

Description of the multiplex network:

The multiplex network consists of a pair of twisted wires connected to several computers on the vehicle.
These two wires are called CAN H and CAN L.

There may be two multiplex networks, depending on the vehicle's equipment.
- **CAN V** ehicle (injection, ABS, instrument panel, etc.) is always present,
- **CAN M** ultimedia (navigation, radio, hands-free telephone) depending on the vehicle's equipment.

Note:
The RENAULT tool can only perform fault finding on the CAN Vehicle multiplex network.

Data exchanged by computers on the networks circulates at a communication speed of:
- 250 kbit/s for the **CAN V** network
- 500 kbit/s for the **CAN M** network

The **CAN Vehicle** network has two computers, each with an internal resistance of **120 Ω** (network termination resistances):
- **the injection computer,**
- **the UCH.**

The **CAN Multimedia** network's termination resistance is in the navigation computer and radio for vehicles fitted with navigation.

PURPOSE

- The purpose of the multiplex network test is to determine the computers present on the vehicle's multiplex network as well as the cause of possible inter-computer communication faults.

- It also serves to determine the functions installed in the vehicle, which are sometimes housed in various computers (distributed functions).

- The test also checks the condition of multiplex network segments.

- The multiplex network test can also run fault finding on computers disconnected from the multiplex network; this provides an overview of the vehicle's electronic layout.

GETtheMANUALS.org

CHECKING MULTIPLEX NETWORK OPERATION

Vehicle computer power supply for fault finding:

Forced + after ignition feed procedure

To save energy, the Phase Vel Satis 2 UCH interrupts the + after ignition feed after 3 minutes have elapsed.
To perform fault finding on a computer, it is possible to force the + after ignition for 1 hour by applying the following procedure:
– press the unlocking button on the card,
– insert the card into the reader,
– press the start button (interrupting the timed + after ignition feed mode),
– press the button for over 5 seconds and until the engine immobiliser warning light starts to flash rapidly (4 Hz).
This forced + after ignition feed mode remains active for 1 hour.

Pressing the start button or removing the card from the reader cuts off the forced + after ignition feed but does not cut off the timed forced + after ignition feed mode. As long as one hour has not elapsed the + after ignition feed function restarts the forced + after ignition feed for the remaining time.
Connect the diagnostic tool and perform the required operations.

This step is the essential starting point for any computer fault finding procedure.

It ensures that the network is correctly connected at the terminals of each computer and that the signal is correctly sent to it and received by it. This function also reads the number of faults present in the computers.

The Test multiplex network function is started after the user selects the vehicle then selects the Test computers icon.

After the network check, the other functions become accessible.

MULTIPLEX NETWORK TEST PROCEDURE:

– Establish dialogue with the computers storing the vehicle configuration (identification reading).
– Read vehicle configuration in the computer containing the multiplex network configuration (Airbag).
– Read list of computers on which fault finding may be performed in the computer containing the information.
– Interrogation of computer.
– Physical measurements (electrical) on the CAN network.

IMPORTANT
There are three diagnostic lines, depending on the computer:

Fault finding performed on computer by the CAN V network: **– Instrument panel** **– Xenon bulb dynamic adjustment** **– S3000 Injection** **– Parking proximity sensor (rear and front sensors)**	**Fault finding procedure performed on computer by the CAN M network:** **Intelligent Transport System (Central Communications Unit)** **Modified hands-free kit (KMLE)**

Fault finding procedure performed on computer by line K:

– UCH	**Climate control system**
– Airbag	**ME7.4.6 Injection**
– ABS/ESP	**EDC15, EDC16 C3 Injection**
– Automatic parking brake	**Parking proximity sensor (rear sensors)**
– Automatic gearbox	**Heater (not present on the CAN)**

GETtheMANUALS.org

ACQUISITION AND DISPLAY OF THE RESULTS

The acquisition screen is made up of a bar graph which changes when the various initialisation, acquisition and data analysis stages are updated.
At the end of the test, the tool displays a screen with the test result.

How to read the topological diagram:

The results display screen consists of three screens:
- the upper zone: fault finding procedure result message,
- the left-hand centre zone: topological diagram (not always available),
- the right-hand centre zone: interpretation of the results from the various vehicle computers and list.

COMPUTERS

- **Valid:** green outline, green lettering.
- **Undetected:** red outline, red lettering.
- **Fault finding not possible:** black outline, black lettering.
- **Unknown:** red outline, red lettering + exclamation mark.

SEGMENTS

- **Valid:** green dash.
- **Faulty:** red dash.
- **Fault finding not possible:** black dash.

Interpreting test result charts

On the **Faults** tab, the computers are organised into the following groups:
- **Undetected** if the computer failed to respond to the tool's identification request.
  Within the **undetected** category, the computers are subdivided into **Stores multiplex network configuration** and **Does not store multiplex network configuration**.
- **Not recognised** if the computer is detected but cannot be identified from its response.

On the **Information** tab, the computers are organised and listed as follows:
- **Fault finding not possible**, if the computer cannot support fault finding with the tool and therefore was not interrogated.
- **Valid** if the computer responded correctly to the tool's request.

Clicking on the **Continue** icon in the lower right-hand corner displays a new screen with the following tabs:

Under the **Results** tab, the computers are organised into the following groups:
- **Faulty** if the computer is recognised and has a non-zero number of faults.
- **OK** if the computer was detected, recognised and has no faults.
- **Not recognised** if the computer was detected but could not be identified from its response.
- **Undetected** if the computer can support fault finding but failed to respond.

GETtheMANUALS.org

Summary table of CAN H and CAN L connections

		Input			Output		
		Connector	Can H	Can L	Connector	Can H	Can L
S3000 injection	SAGEM	Black	A4	A3	Brown	K4	K3
V4Y injection	Hitachi	Black	A12	A13	Black	A31	A32
EDC15C Injection		Grey	B4	A4	Brown	A1	B1
EDC16C3 Injection		Grey	A4	A3			
P9X injection		Black	67	48	Black	67	48
Automatic transmission	SU1	Black	28	42			
ABS + ESP		Blue	23	21	Blue	17	15
ABS + ESP + ACC		Black	11	15	Black	29	25
Automatic parking brake		Grey	A3	A2			
Airbag/pretensioners	ACU3	Yellow	58	59			
Manual or regulated climate control		Black	A10	A9			
UCH		Brown/white clip	11	1	Green	30	40
Instrument panel		Black	B10	B11	Black	B8	B13
Steering lock		Black	3	6			
Xenon bulb dynamic adjustment		Black	A2	A4			
Communication unit (Intelligent Transport System)		White	17	1	White	Multimedia CAN	
						18	2
Voice synthesiser		Black	A6	A7			
Parking proximity sensor (front and rear)		Beige	8	1			
OBD		Grey	6	14		13	12
R262 Engine/passenger compartment		Grey	B5	B6			
R265 Passenger compartment/front end panel		Black	B4	B3			
R297 Passenger compartment		Black	24	23			
R316 Passenger compartment/underbody		Blue	C7	C6			
R369 Dashboard/multimedia		White	19	18			

GETtheMANUALS.org

MULTIPLEX NETWORK CONFIGURATION

The computer storing the multiplex network configuration on this vehicle is the **Airbag** computer.

The **Configuration** screen consists of two tabs for displaying and modifying:
– The first tab: **Multiplex network configuration** on the multiplex network version and the list of computers defined as present on the multiplex network.
– The second tab: **Configuration of computers supporting fault finding** indicates the relevant diagram number, and the list of defined computers which can support fault finding with the RENAULT tool.

IMPORTANT
First repair the computers containing the multiplex network configuration (Airbag) to be able to display the screen with the multiplex network configuration diagram for the vehicle undergoing fault finding.

Computer	Multiplex network configuration	Computers that can support fault finding configuration
Injection	PRESENT	YES
ABS/ESP or ABS/ESP/ACC	PRESENT	YES
UCH	PRESENT	YES
Automatic transmission	PRESENT (option)	YES (option)
Xenon bulb dynamic correction	PRESENT (option)	YES (option)
Automatic parking brake	PRESENT	YES
Instrument panel	PRESENT	YES
Airbag/pretensioners	PRESENT	YES
Steering lock	PRESENT	NO
Communication unit (Intelligent Transport System)	PRESENT (option)	YES
Climate control	PRESENT	YES
Parking proximity sensor (Front and Rear)	PRESENT (option)	YES (option)
Parking proximity sensor (rear)	ABSENT	YES (option)
Modified Hands-Free Kit	ABSENT	YES (option)
Heater	ABSENT	YES (option)

Option: depending on equipment level

If during the multiplex network test the following message appears: "No dialogue with some computers: check power supply and diagnostic lines before relaunching the test"
– the multiplex network can still be seen
– make sure there are not too many computers entered in the configuration: update the multiplex network in accordance with the table above.

GETtheMANUALS.org

NETWORK CONFIGURATION

NOTES	**The configuration is entered with the ignition on; apply the forced + after ignition feed procedure (see Introduction).** **It can be run from the multiplex network test results screens.**

The tool presents the Airbag configuration.

Configuration involves the following steps:
– Select the computer to be modified.

– Choice of multiplex network diagram version.

This is the multiplex network diagram version. The version number increases with each change to the multiplex network wiring in this vehicle.

IMPORTANT
On Velsatis ph2 there are two versions of the diagram:
– Diagram version 4: If P9X engine fitted
– Diagram version 3: All other vehicle configurations

Choice of computers in the vehicle present on the network
Always present in the vehicle:
- Injection,
- the ABS/ESP,
- the instrument panel,
- the UCH,
- the airbag/pretensioners.
- steering lock,
- regulated climate control;

+ the vehicle options:
- the automatic gearbox,
- xenon bulbs (COSLAD),
- Parking proximity sensor, CAN (Front and rear)
- automatic parking brake,
- Intelligent transport system (ITS) = communications unit.
- Parking proximity sensor (Rear)

IMPORTANT
A computer connected to the multiplex network but not registered in the computer containing the multiplex network configuration will not be checked in the multiplex network test.
Correct the configuration by registering as present the computer missing from the Airbag configuration.
Start the multiplex network test again after modifying the configuration.

GETtheMANUALS.org

MULTIPLEX NETWORK NOT OPERATIONAL

NOTES	**First check that the computer at the end of the faulty segment is correctly supplied (earth, + battery, + accessories or + after ignition feed).** **Always check the computer conformity.** **IMPORTANT** Switch off the ignition, remove the RENAULT Card from the card reader, check that the side lights are not on and wait for **1 minute**.

Finding the fault type	***NOTES***	Obtain a copy of the multiplex network diagram for the vehicle. (Diagnostic socket diagram).

Measure the resistance between **tracks 6** and **14** of the diagnostic socket.
What is the resistance?

0 Ω	The two lines are short circuited (consult the **Repair help** section).
60Ω	Check that there is an **earth, + battery feed, + accessories feed or + after ignition feed at the injection computer and UCH terminals**.
Between 70 Ω and 110 Ω	Check that there is no interference resistance on **tracks 6 and 14**, and then check that there is no short circuit to earth or + battery feed.
120 Ω	Open circuit on one or two lines. Disconnect the injection computer and check the multiplex connection between the diagnostic socket and the injection computer. Is the multiplex connection correct?

YES	Check that the resistance is approximately **120 Ω** between the two network tracks on the injection computer: – If the resistance is not approximately **120 Ω, contact Techline**. – If the resistance is **120 Ω**, check the continuity and absence of interference resistance on the multiplex connection between the diagnostic socket and the UCH. Repair if necessary.
	Check that the resistance is approximately **120 Ω** between the two network tracks on the UCH computer: – If the resistance is not approximately **120 Ω, contact Techline**.
NO	Repair the multiplex connection between the diagnostic socket and the injection computer. If the fault is still present, **contact your Techline**.

AFTER REPAIR	Carry out the multiplex network test again using the diagnostic tool. Clear the stored faults on all the computers connected to the network. Deal with any other faults.

GETtheMANUALS.org

FAULTY SEGMENT

NOTES	**First check that the computer at the end of the faulty segment is correctly supplied (earth, + battery, + accessories or + after ignition feed).** **Always check the computer conformity.** **IMPORTANT** It may be that the tool cannot exactly determine the faulty segment(s). It will then suggests several segments that could be faulty. In this case, repair the segment closest to the diagnostic socket.

Isolate the faulty segment by disconnecting both ends of the segment. Check the condition of the connectors.
Check the continuity of the CAN H and CAN L lines between the two connectors on the isolated segment.
For computer and connection track allocations (see **CAN H and CAN L connections summary table**).
Perform the necessary operations to check the continuity of the two lines (for example, replacing the wiring).
Make sure that the computer present in the vehicle is compatible and that the data it is producing is correct.

Reconnect the segment.
Carry out a new multiplex network test with the diagnostic tool.
Is the segment still declared faulty?

NO	End of fault finding.
YES	Are there other faulty segments?

NO	Repeat the multiplex network tests to check the continuity and insulation of the CAN H and CAN L lines between the end of the faulty segment and the diagnostic socket.
YES	Apply the same procedure to each segment.

AFTER REPAIR	Carry out the multiplex network test again using the diagnostic tool. Clear the stored faults on all the computers connected to the network. Deal with any other faults.

GETtheMANUALS.org

FAULTY COMPUTER

NOTES	Make sure that the computers installed in the vehicle are the correct type and are compatible with the vehicle. Check the power supply to the computers (earth, + battery, + accessories or + after ignition feed).

Make sure that the computer **wake-up mode** is in full working order on the vehicle and properly assimilated by the computers.

The wake-up mode is:
- **Timed feed:** UCH, Instrument panel, Parking brake.
- **+ accessories feed:** Climate control, Central communications unit, ABS/ASR.
- **+ After ignition feed:** Injection, Airbag/Pretensioners, Automatic Transmission, Xenon bulbs, Parking proximity sensor.
  In **+ accessories feed** these computers will not appear.

– Switch to **computer fault finding** mode.

Test dialogue with computers.

- No dialogue between computers and the diagnostic tool: see ALP 1 **No dialogue with the computer** of the computer(s) on which there is no dialogue with the diagnostic tool.
  Check the connections to the computers and that there are no open circuits.
  Repair if necessary.
- Computers are not displaying all the information on their identifications:
  Check in the Workshop Repair Manual or the World Vehicle Database that the computer is compatible with the vehicle.
  Check that the CLIP diagnostic tool update is recent enough to be able to deal with faults on the vehicle.

If no faults or open or short circuits have been detected after these checks, contact Techline.

AFTER REPAIR	Carry out the multiplex network test again using the diagnostic tool. Clear the stored faults on all the computers connected to the network. Deal with any other faults.

GETtheMANUALS.org

UNRECOGNISED COMPUTERS ON THE NETWORK

NOTES	– Check computer compatibility with the vehicle.

Check that the CLIP diagnostic tool update is recent enough to be able to deal with faults on the vehicle.

– Switch to **computer fault finding** mode.

Test dialogue with computers.

- No dialogue between computers and diagnostic tool: see ALP 1.
  No dialogue with the computers or computers not communicating with the diagnostic tool.
  Check the connections to the computers and that there are no open circuits.
  Repair if necessary.
- If there is communication with computers:
  Make sure that the computer identification information is correct and matches the vehicle which has undergone fault finding.

– Enter the data on the computers:
  – Parts Department part no.:
  – Vdiag:
  – Program no.:
  – Version no.:
  – Calibration no.:

If no faults or open or short circuits have been detected after these tests, contact Techline.

AFTER REPAIR	Carry out the multiplex network test again using the diagnostic tool. Clear the stored faults on all the computers connected to the network. Deal with any other faults.

GETtheMANUALS.org

ALP 1	No dialogue with computers

NOTES	**Vehicle computer power supply for fault finding:** Engine stopped, ignition on. Connect the diagnostic tool and perform the required operations.

Try the diagnostic tool on another vehicle.
Make sure that the tool update version is **CD no. 53** onwards.

Check:
– the connection between the diagnostic tool and socket (connection and cable in good condition),
– the computers' power supply.
– the engine and passenger compartment fuses.

Check that the **CLIP** sensor is supplied by tracks **16 (+12 V)**, and **4** and **5 (earth)** of the diagnostic socket, this can be visually confirmed if the two red diodes on the sensor light up.
Check that the **CLIP** sensor is supplied by the computer's USB port (red diode).
Make sure that the **CLIP** sensor is communicating properly with the vehicle's computers; this can be seen by the two green diodes on the sensor lighting up.

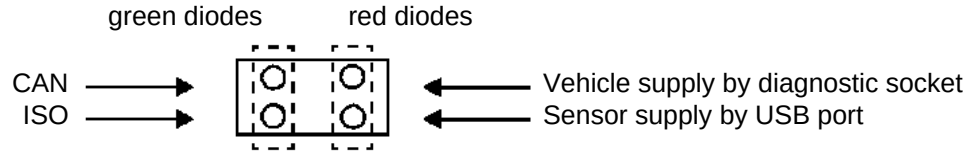

Use the diagnostic socket to check the following tracks:
Track 1 → **+ After ignition feed**
Track 16 → **+ battery feed**
Tracks 4 and 5 → **Earth**
Repair if necessary.

Computer connected to CAN Vehicle
If the fault is still present, check the **continuity** and **insulation** of the lines:
CAN H (diagnostic socket track 6)
CAN L (diagnostic socket track 14)

With a multimeter, make sure that the voltages at the diagnostic socket terminals are:
– **2.5 V** across **CAN H (track 6)** and earth (**tracks 4 and 5**) (Average values)
– **2.5 V** across **CAN L (track 14)** and earth (**tracks 4 and 5**) (Average values)

Computer connected to Multimedia CAN
If the fault is still present, check the **continuity** and **insulation** of the lines:
CAN H (diagnostic socket track 13)
CAN L (diagnostic socket track 12)

With a multimeter, make sure that the voltages at the diagnostic socket terminals are:
– **2.5 V** across **CAN H (track 13)** and earth (**tracks 4 and 5**) (Average values)
– **2.5 V** across **CAN L (track 12)** and earth (**tracks 4 and 5**) (Average values)

To locate a short circuit on the vehicle's multiplex network, refer to the **Repair help** section.

GETtheMANUALS.org

ALP 2	No topology diagram or configuration table display at the end of the multiplex network test

The topology cannot be displayed under the following conditions:

1 The computer containing the multiplex network configuration has not responded.
2 The multiplex network is not operational; therefore dialogue is impossible.
3 In the **multiplex network** tab on the configuration screen, an incorrect **diagram version** number has been entered in the computer containing the network configuration.
4 No **diagram version** has been entered in the computer containing the configuration.

1 - The computer containing the multiplex network configuration has not responded.
First check that the computer containing the configuration (Airbag) is supplied (earth + battery feed, + accessories feed or + after ignition feed).
Check the condition of the multiplex network and the continuity and insulation of the CAN H and CAN L lines between the computers storing the configuration.

2 - The multiplex network is not operational; therefore dialogue is impossible.
See **Multiplex network not operational** fault

3 - In the multiplex network tab on the configuration screen, an incorrect diagram version number has been entered in the computer containing the network configuration.
See the **network configuration** configuration.

4 - No diagram version has been entered in the computer containing the configuration.
See the **network configuration** configuration.

GETtheMANUALS.org

ALP 3	Configuration table display at the end of the multiplex network test

NOTES	Fault finding chart to use if the tool loads the configuration screen at the end of the multiplex network test. The configuration chart is always accessible through the **Configuration** icon. Update the vehicle configuration again then relaunch the multiplex network test. Check that the two tabs are consistent before relaunching the test.

The RENAULT diagnostic tool loads the configuration screen directly under the following conditions:

- **MULTIPLEX NETWORK** tab
  - The **diagram version** on the computer containing the multiplex network configuration is incorrect (see Network configuration).
  - In this case, the following message appears during the multiplex test: "Some computers responding to the diagnostic tool are not stored in the computer configuration".
  - The computer containing the network version is blank (if Airbag computer has been replaced).
- **COMPUTERS SUPPORTING FAULT FINDING** tab
  - Inconsistency between the list of computers entered and the computers actually detected on the vehicle. Some computers present on the vehicle are absent in the computer containing the network configuration (see Multiplex network configuration). In this case, the following message appears during the multiplex test: "Some computers responding to the diagnostic tool are not stored in the computer configuration".

GETtheMANUALS.org

VEL SATIS

8 Electrical equipment

88C AIRBAGS AND PRETENSIONERS

ACU3 AIRBAG
Vdiag No.: 24, 28, 2C, 2D

Fault finding - Introduction	88C - 1
Fault finding - System operation	88C - 15
Fault finding - Allocation of computer tracks	88C - 16
Fault finding - Replacement of components	88C - 20
Diagnostics - Configurations and Programming	88C - 21
Fault finding - Fault summary table	88C - 23
Fault finding - Interpretation of faults	88C - 25
Fault finding - Conformity check	88C - 115
Fault finding - Status and parameter summary table	88C - 116
Fault finding - Fault finding Chart	88C - 120

FEBRUARY 2006 **EDITION ANGLAISE**

"The repair procedures given by the manufacturer in this document are based on the technical specifications current when it was prepared.

The methods may be modified as a result of changes introduced by the manufacturer in the production of the various component units and accessories from which his vehicles are constructed."

All rights reserved by Renault s.a.s.

Copying or translating, in part or in full, of this document or use of the service part reference numbering system is forbidden without the prior written authority of Renault s.a.s.

© Renault s.a.s. 2006

GETtheMANUALS.org

1. SCOPE OF THIS DOCUMENT

This document presents the fault finding procedure applicable to all computers with the following specifications:

Vehicle(s): **VELSATIS, LAGUNA II, ESPACE IV**	*Computer name:* **ACU3 AIRBAG**
Function concerned: **AIRBAG**	*Vdiag No.:* **24, 28, 2C, 2D**

2. PREREQUISITES FOR FAULT FINDING

Documentation type:

Fault finding procedures (this manual):
– Assisted fault finding (integrated into the diagnostic tool), Dialogys.
Wiring Diagrams:
– Visu-Schéma (CD-ROM), paper version.

Diagnostic tools type:

– CLIP

Type of special tooling required:

Special tooling required	
– Multimeter. – Set of adapters and borniers for using the Airbag and pretensioner wiring harness checks function of CLIP and XRBAG tools for updates comprising the borniers listed below. **– The development of the airbag ignition module connectors requires modification of a dummy ignition module.** **LOCAL MODIFICATION OF THE DUMMY IGNITION MODULE** **– Remove the ignition module from its red mounting and remove one of the two brown locking notches.**	
Elé. 1615	**75-track B53** computer bornier.
Elé. 1617 4/4	**10-track black** rotary switch adapter.
Elé. 1617 2/4	**6-track yellow** wiring harness test adapter.
Elé. 1616	**28-track** seat wiring harness test adapter.
Elé. 1684	**29-track** door wiring harness test adapter.
Elé. 1645	**12-track** A computer wiring harness test adapter.

GETtheMANUALS.org

3. RECAP

Phase 2 vehicle procedure

To save energy, the UCH of the VELSATIS, LAGUNAII and ESPACE IV cuts off the **+ after ignition feed** after **3 minutes**.

To run fault finding on a computer, it is possible to force the **+ after ignition feed** for **1 hour** by applying the following procedure:

- Press the card unlocking button,
- insert the card into the reader,
- press the Start button (interrupting the **timed + after ignition feed** mode),
- press the button for more than 5 seconds, until the immobiliser warning light starts to flash rapidly (**4 Hz**).

This **forced + after ignition feed** mode remains active for **1 hour**.
Pressing the Start button or removing the card from the card reader cuts off the **+ after ignition feed** but does not cut off the **forced after ignition feed** timed mode. Until one hour has elapsed, activating the **+ after ignition feed** will restart **forced + after ignition feed** for the remaining time.

Phase 1 vehicle procedure:

To run fault finding on the vehicle's computers, switch on the ignition in fault finding mode:

- **Vehicle card in card reader**.

Faults

Faults are declared as either present or stored (depending on whether they appeared in a certain context and have disappeared since, or whether they remain present but have not been diagnosed within the current context).

The **present** or **stored** status of faults should be taken into consideration when the diagnostic tool is switched on after the + after ignition feed (without any system components being active).

For a **present fault**, apply the procedure described in the **Interpretation of faults** section.

For a **stored fault**, note the faults displayed and apply the instructions in the **Notes** section.

If the fault is **confirmed** when the instructions in the Notes section are applied, the fault is present. Deal with the fault

If the fault is **not confirmed**, check:
- the electrical lines which correspond to the fault,
- the connectors for these lines (for oxidation, bent pins, etc.),
- the resistance of the component detected as faulty,
- the condition of the wires (melted or split insulation, wear).

GETtheMANUALS.org

Conformity check

The aim of the conformity check is to check data that does not produce a fault on the diagnostic tool because the data is inconsistent. Therefore, this stage is used to:
– carry out fault finding on faults that do not have a fault display, and which may correspond to a customer complaint,
– check that the system is operating correctly and that there is no risk of a fault recurring after repairs.

This section gives the fault finding procedures for statuses and parameters and the conditions for checking them.

If a status is not behaving normally or a parameter is outside the permitted tolerance values, consult the corresponding fault finding page.

Customer complaints - Fault finding chart

If the test with the diagnostic tool is OK but the customer complaint is still present, the fault should be processed by **customer complaints**.

A synopsis of the general procedure to follow is provided on the following page in the form of a flow chart

GETtheMANUALS.org

4. FAULT FINDING PROCEDURE

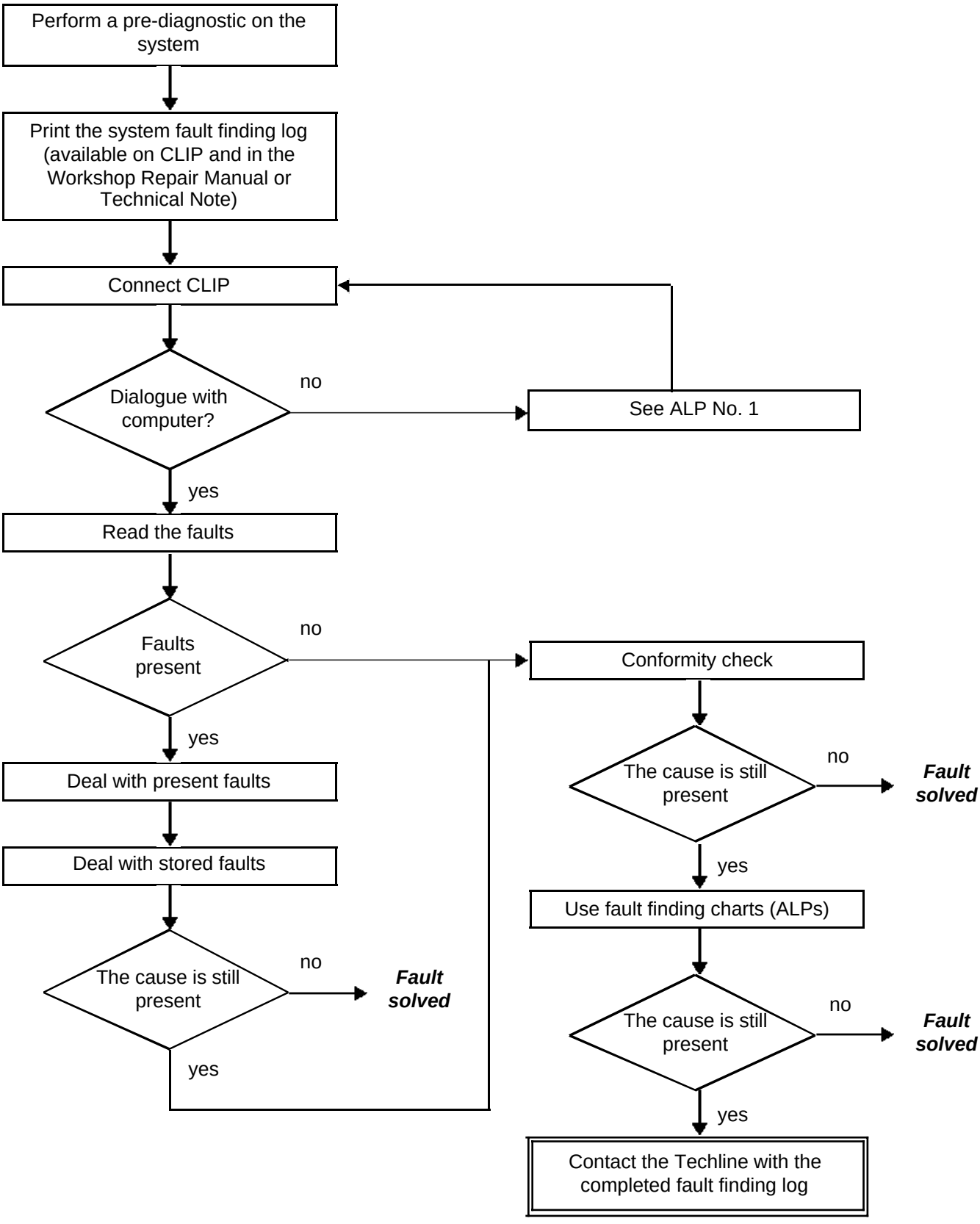

GETtheMANUALS.org

4. FAULT FINDING PROCEDURE (continued)

Wiring check

Fault finding problems
Disconnecting the connectors and/or manipulating the wiring harness may temporarily remove the cause of a fault.
Electrical measurements of voltage, resistance and insulation are generally correct, especially if the fault is not present when the analysis is made (stored fault).

Visual inspection
Look for damage under the bonnet and in the passenger compartment.
Carefully check the fuses, insulators and wiring harness routing.
Look for signs of oxidation.

Tactile inspection
While manipulating the wiring harness, use the diagnostic tool to note any change in fault status from stored to present.
Make sure that the connectors are properly locked.
Apply light pressure to the connectors.
Twist the wiring harness.
If there is a change in status, try to locate the source of the fault.

Inspection of each component
Disconnect the connectors and check the appearance of the clips and tabs, as well as the crimping (no crimping on the insulating section).
Make sure that the clips and tabs are properly locked in the sockets.
Check that no clips or tabs have been dislodged during connection.
Check the clip contact pressure using an appropriate model of tab.

Resistance check
Check the continuity of entire lines, then section by section.
Look for a short circuit to earth, to **+ 12 V** or to another wire.

If a fault is detected, repair or replace the wiring harness.

GETtheMANUALS.org

5. FAULT FINDING LOG

IMPORTANT!

NOTE
Any fault on a complex system requires thorough fault finding with the appropriate tools. The FAULT FINDING LOG, which should be completed during the procedure, enables you to keep track of the procedure which is carried out. It is an essential document when consulting the manufacturer.

IT IS THEREFORE MANDATORY TO FILL OUT A FAULT FINDING LOG EACH TIME FAULT FINDING IS CARRIED OUT

You will always be asked for this log:

- when requesting technical assistance from the Techline,
- for approval requests when replacing parts for which approval is obligatory,
- to be enclosed when returning monitored parts on request. The log is needed for warranty reimbursement, and enables better analysis of the parts removed.

6. SAFETY ADVICE

Safety rules must be observed during any work on a component to prevent any damage or injury:

- make sure that the battery is properly charged to avoid damaging the computers with a low load,
- use the appropriate tools.

During operations on the airbag/seat belt pretensioner systems it is essential that you lock the computer using the diagnostic tool to prevent any risk of accidental triggering (all the ignition lines will be inhibited). The locked mode is indicated when the instrument panel warning light comes on.

If it is impossible to connect the diagnostic tool, switch off the ignition, remove the system power supply fuse and wait at least 2 seconds for the discharge of the reserve power capacity.

Never measure the airbag or pretensioner trigger lines with any device other than XRBAG or CLIP's Airbag and pretensioner wiring harness check function.

Before using a dummy ignition module, ensure that its resistance is between 1.8 and 2.5 Ω.

Check during the operation that the computer feed voltage does not drop below 10 volts.

Disconnect the battery before any removal - refitting of a pyrotechnical component (airbag module, pretensioner or seat belt inertia reel).

NOTE
Airbag and pretensioner destruction and scrapping is subject to national legislation.

GETtheMANUALS.org

FAULT FINDING LOG

System: Airbags and pretensioners

List of monitored parts: ***Airbag computer***

Administrative identification

Date	2 0
Log completed by	
Dealership name or no./ Country	
Vehicle model	
VIN	
Engine	
Diagnostic tool	CLIP
Update version	

Customer complaint

	1192	Airbag warning light lit

Other — Your comments:

When the fault appears

	011	When the ignition is switched on
	004	Intermittently
	999	When starting the engine
	005	While driving

Other — Your comments:

Documentation used in fault finding

Fault finding procedure used	
Type of fault finding manual:	Workshop Repair Manual ❑ Technical Note ❑ Assisted fault finding ❑
Fault finding manual no:	
Wiring diagram used	
Wiring Diagram Technical Note No.:	
Other documentation	
Title and/or part number:	

RENAULT

FD 16
Fault finding log

FAULT FINDING LOG

System: Airbag and pretensioners

GETtheMANUALS.org

Identification of the computer and parts replaced for the system

Part 1 part no.	
Part 2 part no.	
Part 3 part no.	
Part 4 part no.	
Part 5 part no.	

To be read with the diagnostic tool (Identification screen):

Computer part no.	
Supplier no.	
Program no.	
Software version	
Calibration number	
VDIAG	

Faults found with the diagnostic tool

Fault no.	Present	Stored	Fault name	Specification

System-specific information

Total vehicle mileage when the customer complaint occurred:	
How often does it occur?	
How long after the engine starts?	

Additional information

What factors led you to replace the computer?	
What other parts were replaced?	
Other defective functions?	❑ CAN ❑ Instrument panel ❑ Rotary switch ❑ Wiring harness ❑ Battery ❑ Fuse ❑ Seats ❑ Others
Your comments:	

RENAULT

FD 16
Fault finding log

GETtheMANUALS.org

FAULT FINDING - SYSTEM CONFIGURATION DIAGRAM VELSATIS - LAGUNA II (FRONT section)

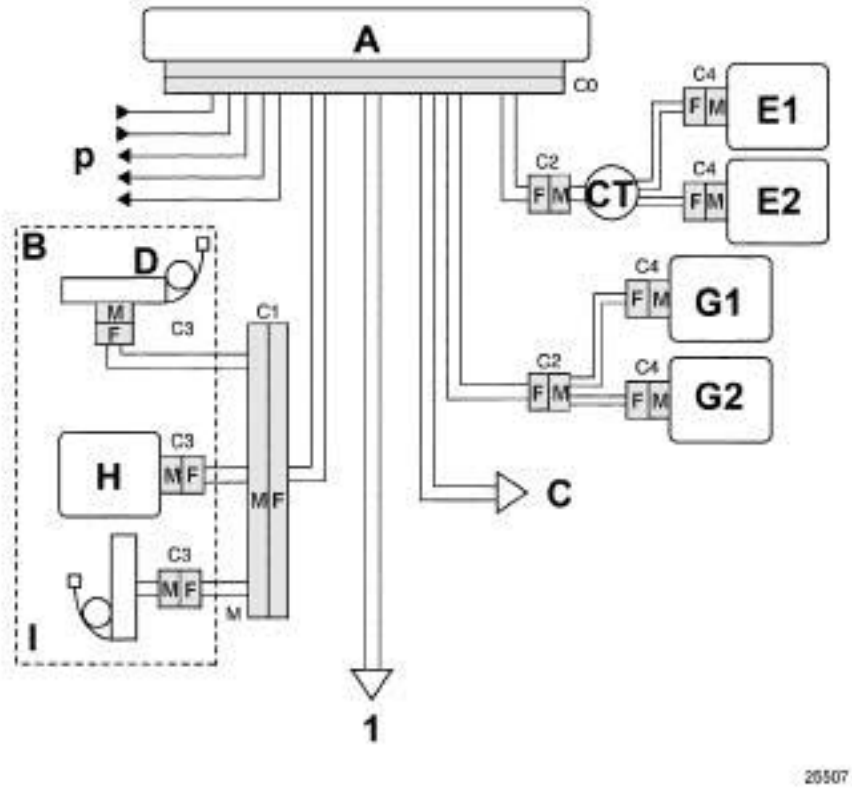

1 **To rear wiring**
A Central unit
B Driver's seat
C Front passenger seat
D Buckle pretensioner
E Driver's frontal airbag ignition module
G Passenger's frontal airbag ignition module
H Front chest level side airbag ignition module
I Lap belt pretensioner
CT Rotary switch + 12 V/Earth
P Diagnostic lines/Sensors/Locking switch/Multiplex network

	FRONT AIRBAGS	
	Measuring point	Correct value
Driver	C0, C2 and C4	1.5 to 7.1 Ω
Passenger	C0, C2 and C4	1.5 to 4.4 Ω
	SIDE AIRBAGS AND PRETENSIONERS	
	Measuring point	Correct value
	C0, C1 and C3	1.5 to 4.4 Ω

Correct insulation value: display ≥ 100.h or 9999 flashing.

GETtheMANUALS.org

FAULT FINDING - SYSTEM CONFIGURATION DIAGRAM VELSATIS - LAGUNA II (REAR section)

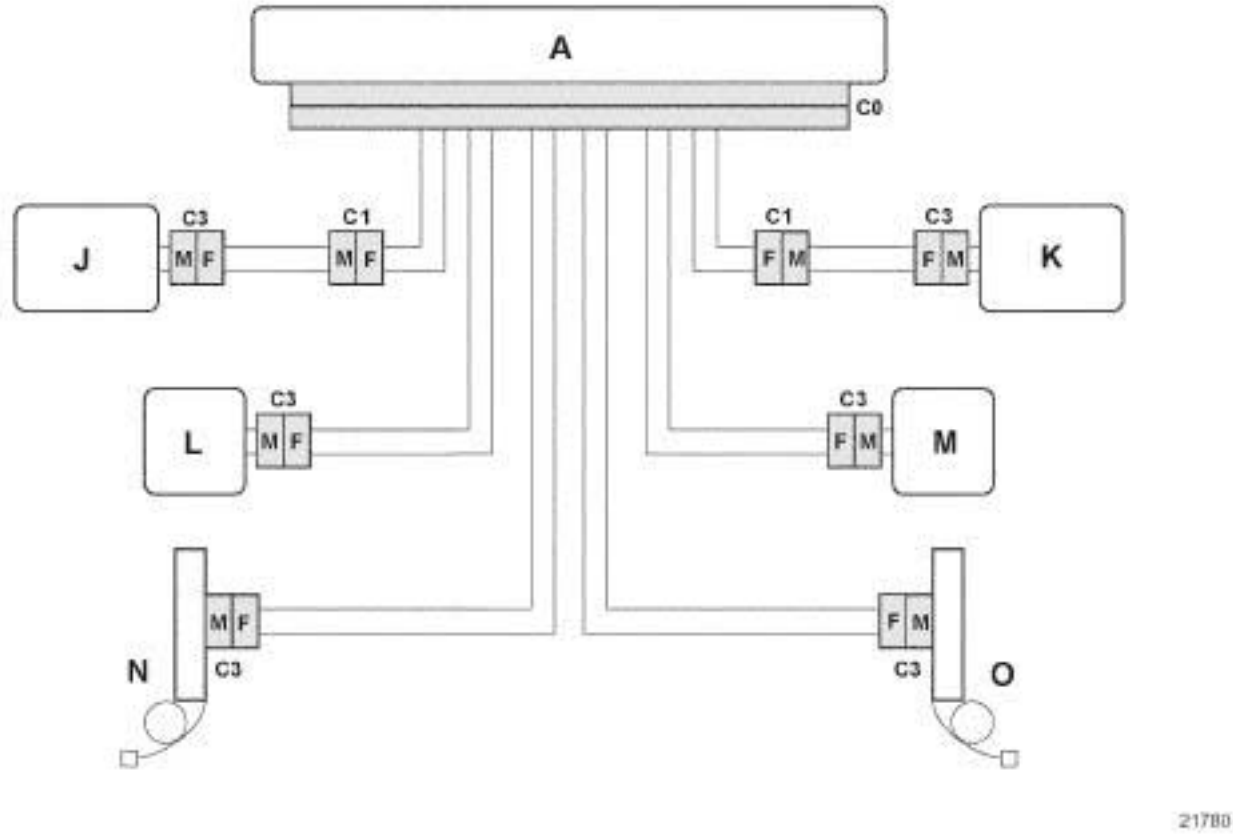

A Central unit
J/K Curtain airbag ignition modules
L/M Rear chest level side airbag ignition modules
N/O Rear pyrotechnic seat belt retractors

	FRONT AIRBAGS	
	Measuring point	Correct value
Driver	C0, C2 and C4	1.5 to 7.1 Ω
Passenger	C0, C2 and C4	1.5 to 4.4 Ω
	SIDE AIRBAGS AND PRETENSIONERS	
	Measuring point	Correct value
	C0, C1 and C3	1.5 to 4.4 Ω

Correct insulation value: display ≥ 100.h or 9999 flashing.

GETtheMANUALS.org

FAULT FINDING - SYSTEM CONFIGURATION DIAGRAM ESPACE IV (FRONT section)

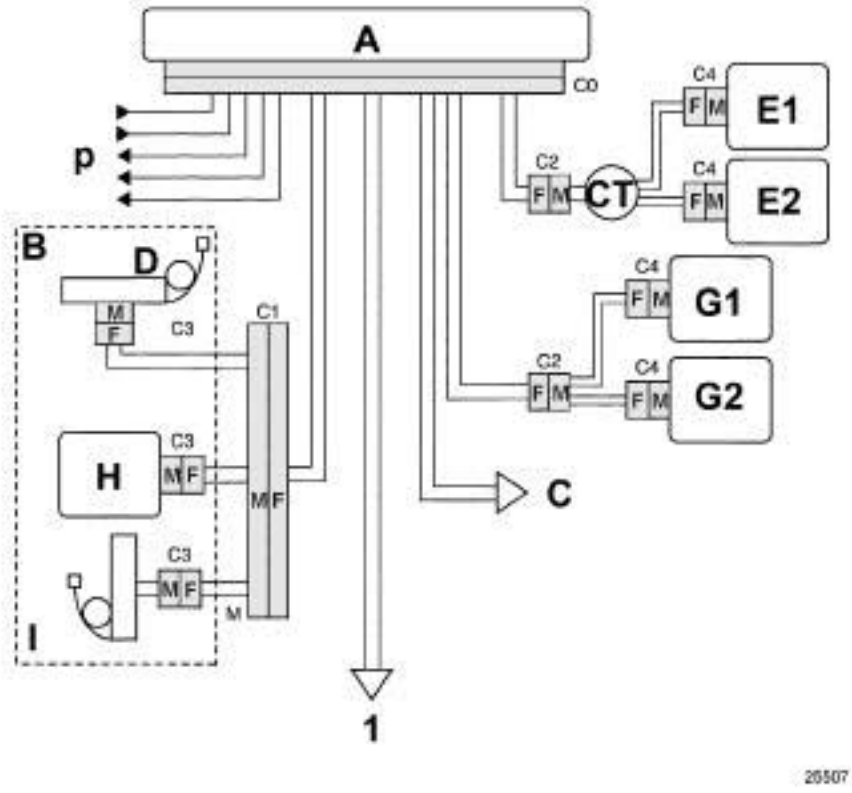

1 **To rear wiring**
A Central unit
B Driver's seat
C Front passenger seat
D Buckle pretensioner
E Driver's frontal airbag ignition module
G Passenger's frontal airbag ignition module
H Front chest level side airbag ignition module
I Lap belt pretensioner
CT Rotary switch + 12 V/Earth
P Diagnostic lines/Sensors/Locking switch/Multiplex network

	FRONT AIRBAGS	
	Measuring point	Correct value
Driver	C0, C2 and C4	1.5 to 7.1 Ω
Passenger	C0, C2 and C4	1.5 to 4.4 Ω
	SIDE AIRBAGS AND PRETENSIONERS	
	Measuring point	Correct value
	C0, C1 and C3	1.5 to 4.4 Ω

Correct insulation value: display ≥ 100.h or 9999 flashing.

GETtheMANUALS.org

FAULT FINDING - SYSTEM CONFIGURATION DIAGRAM ESPACE IV (REAR section)

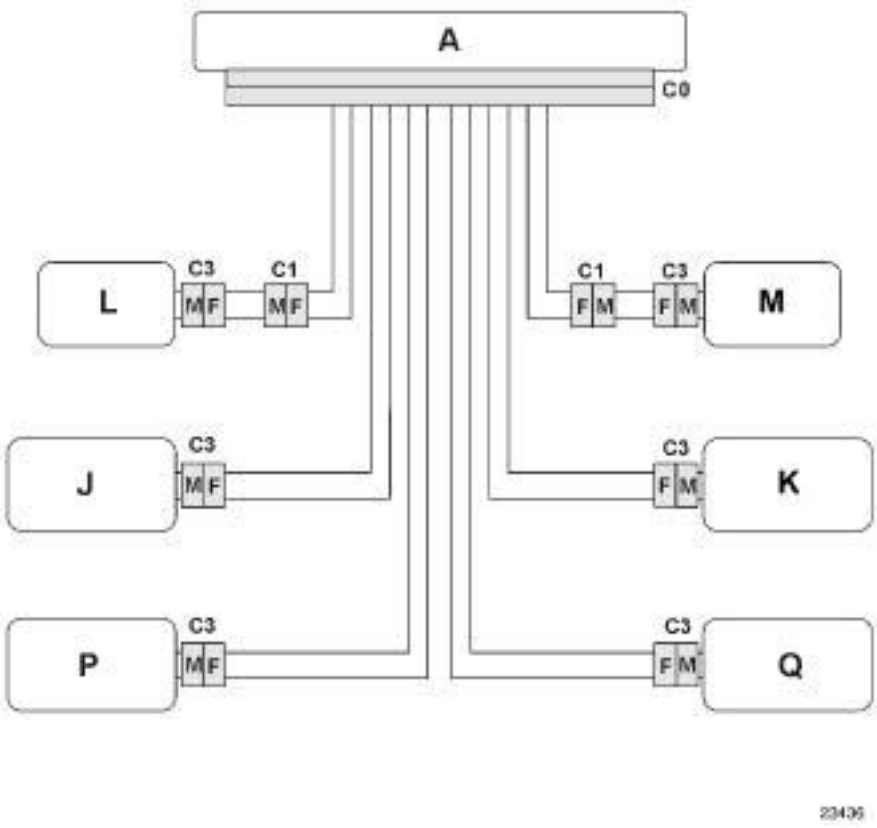

A Central unit
J/K Front curtain airbag ignition modules
L/M Rear chest level side airbag ignition modules
P/Q Rear curtain airbag ignition modules

	FRONT AIRBAGS	
	Measuring point	Correct value
Driver	C0, C2 and C4	1.5 to 7.1 Ω
Passenger	C0, C2 and C4	1.5 to 4.4 Ω
	SIDE AIRBAGS AND PRETENSIONERS	
	Measuring point	Correct value
	C0, C1 and C3	1.5 to 4.4 Ω

Correct insulation value: display ≥ 100.h or 9999 flashing.

GETtheMANUALS.org

DEFINITION OF TRIGGER LINES FOR THE VELSATIS AND LAGUNA II

L1: Driver's lap belt pretensioner circuit (**cable K on B53**).

L2: Passenger lap belt pretensioner circuit (**cable L on B53**).

L3: Driver's side buckle pretensioner circuit (**cable B or C on B53**).

L4: Passenger side buckle pretensioner circuit (**cable E or F on B53**).

L5: Passenger frontal airbag circuit, circuit 1 (**cable O on B53**).

L6: Passenger frontal airbag circuit, circuit 2 (**cable P on B53**).

L7: Driver's frontal airbag circuit, circuit 1 (**cable M on B53**).

L8: Driver's frontal airbag circuit, circuit 2 (**cable N on B53**).

L9: Curtain airbag circuit, driver side (**cable S on B53**).

L10: Curtain airbag circuit, passenger's side (**cable T on B53**).

L11: Driver's chest level front side airbag circuit (**cable Q on B53**).

L12: Passenger front chest level side airbag circuit (**cable R on B53**).

L13: Rear chest level side airbag circuit, driver side (**cable W on B53**).

L14: Rear chest level side airbag, passenger side (**cable X on B53**).

Note:
The ignition module circuits not present on a vehicle are declared in open circuit following the replacement of the computer (default configuration with all trigger lines present).
Configure the trigger lines present on the vehicle using the diagnostic tool (note: configuration of the ignition modules on CLIP covers 2 screens).

GETtheMANUALS.org

DEFINITION OF TRIGGER LINES FOR THE ESPACE IV

L1: Driver's lap belt pretensioner circuit (**cable K of B53**).

L2: Passenger lap belt pretensioner circuit (**cable L of B53**).

L3: Front buckle pretensioners circuit (**cable B and C on B53**).

L5: Passenger frontal airbag circuit, circuit 1 (**cable O on B53**).

L6: Passenger frontal airbag circuit, circuit 2 (**cable P on B53**).

L7: Driver's frontal airbag circuit, circuit 1 (**cable M on B53**).

L8: Driver's frontal airbag circuit, circuit 2 (**cable N on B53**).

L9: Front curtain airbag circuit, driver's side (**cable S on B53**).

L10: Front curtain airbag circuit, passenger's side (**cable T on B53**).

L11: Driver's chest level front side airbag circuit (**cable Q on B53**).

L12: Passenger chest level front side airbag circuit (**cable R on B53**).

L13: Rear chest level side airbag circuit, driver side (**cable W on B53**).

L14: Rear chest level side airbag, passenger side (**cable X on B53**).

L15: Rear curtain airbag circuit, driver's side (**cable U on B53**).

L16: Rear curtain airbag circuit, passenger's side (**cable V on B53**).

Note:
The ignition module circuits not present on a vehicle are declared in open circuit following the replacement of the computer (default configuration with all trigger lines present).
Configure the trigger lines present on the vehicle using the diagnostic tool (note: configuration of the ignition modules on CLIP covers 2 screens).

GETtheMANUALS.org

The main function of the ACU 3 computer is to activate, in the event of severe impact, the restraint systems such as seat belt pretensioners, the pyrotechnic inertia reels and the frontal and side airbags according to the system configuration.

The passenger and driver's frontal airbags are adaptive (2 ignition modules).

Presence of a passenger airbag locking switch

Two distinct impact levels are transmitted on the **CAN** network:
- level 1 unlocks the doors and lights the hazard warning lights,
- level 2 cuts off the fuel pump in addition to the level 1 actions.

Special features of the operation of the airbag locking switch in Vdiag 24, 28:

The vehicle user has **10 seconds** after **+ after ignition** to inhibit the passenger airbag by the key.

After this time, the computer will store the **DF193** fault, and light up the instrument panel warning light.

Switching the ignition off and on again will block this fault.

Special features of the operation of the airbag locking switch in Vdiag 2C, 2D:

Inhibition of the passenger airbag is authorised even with the engine running, at a vehicle speed of less than **4 mph (7 km/h)**.

If the switch status is changed above **4 mph (7 km/h)**, the system status remains unchanged in relation to is status before the speed threshold was exceeded, nevertheless the fault warning light will light up and **DF193** will be stored. If the speed signal is unavailable, it will not be possible to change the switch status.

In this case the two warning lights are dissociated and the passenger airbag status signal is maintained while the airbag fault warning light is lit.

Note for the VELSATIS and LAGUNA II:
The front buckle pretensioner of the driver's seat and the rear inertia reel on the driver's side, are wired in series.
The passenger's front buckle pretensioner and rear inertia reel on the passenger side are wired in series.

Note for the ESPACE IV:
The front buckle pretensioners are wired in series.

GETtheMANUALS.org

75-track connector (VELSATIS, LAGUNA II)

Description	Track	Track	Description
Not used	1	29	+ Passenger lap belt pretensioner
+ Buckle pretensioner: driver	2	30	+ After ignition feed
- Rear pyrotechnic inertia reel, driver's side	3	31	Earth
- Buckle pretensioner: passenger	4	32	Not used
+ Rear pyrotechnic inertia reel, passenger side	5	33	Not used
Not used	6	34	Diagnostic line K
Not used	7	35	- Driver's frontal airbag circuit 1
Not used	8	36	+ Driver's frontal airbag circuit 2
Not used	9	37	- Passenger frontal airbag circuit 1
Not used	10	38	+ Passenger frontal airbag circuit 2
Not used	11	39	- Airbag lock switch
Not used	12	40	Not used
Not used	13	41	- Driver's chest level side airbag
Not used	14	42	+ Passenger front chest level side airbag
Not used	15	43	- Driver's side curtain airbag
Not used	16	44	+ Passenger's side curtain airbag
Not used	17	45	+ Driver's side lateral impact sensor
Not used	18	46	+ Passenger side lateral impact sensor
Not used	19	47	Not used
Not used	20	48	Not used
Not used	21	49	- Rear chest level side airbag on driver's side
Not used	22	50	+ Rear chest level side airbag, passenger side
Not used	23	51	+ Rear pyrotechnic inertia reel, driver's side
Not used	24	52	- Rear pyrotechnic inertia reel, passenger side
Not used	25	53	+ Driver's lap belt pretensioner

GETtheMANUALS.org

75-track connector (VELSATIS, LAGUNA II) (CONTINUED)

Description	Track	Track	Description
- Buckle pretensioner: driver	26	54	- Passenger buckle pretensioner
+ Buckle pretensioner: passenger	27	55	Seat inertia reel locking unit connection
- Driver's lap belt pretensioner	28	56	+ Driver's seat position sensor
+ Passenger presence sheet	57	58	CAN H
CAN L	59	60	+ Driver's frontal airbag circuit 1
- Driver's frontal airbag circuit 2	61	62	+ Passenger frontal airbag circuit 1
- Passenger frontal airbag circuit 2	63	64	+ Airbag lock switch
Not used	65	66	+ Driver's front chest level side airbag
- Passenger front chest level side airbag	67	68	+ Driver's side curtain airbag
- Passenger side curtain airbag	69	70	- Driver's side lateral impact sensor
- Passenger side lateral impact sensor	71	72	Not used
Not used	73	74	+ Rear chest level side airbag, driver's side
- Rear chest level side airbag, passenger side	75		

GETtheMANUALS.org

75-track connector (ESPACE IV)

Description	Track	Track	Description
Not used	1	29	+ Passenger front buckle pretensioner
+ Driver's front buckle pretensioner	2	30	+ after ignition feed
- Front passenger buckle pretensioner	3	31	Earth
- Buckle pretensioner: passenger	4	32	Not used
+ Rear pyrotechnic inertia reel, passenger side	5	33	Not used
Not used	6	34	Diagnostic line K
Not used	7	35	- Driver's frontal airbag circuit 1
Not used	8	36	+ Driver's frontal airbag circuit 2
Not used	9	37	- Passenger frontal airbag circuit 1
Not used	10	38	+ Passenger frontal airbag circuit 2
Not used	11	39	- Airbag lock switch
Not used	12	40	Not used
Not used	13	41	- Driver's chest level side airbag
Not used	14	42	+ Passenger front chest level side airbag
Not used	15	43	- Front curtain airbag, driver's side
Not used	16	44	+ Front curtain airbag, passenger's side
Not used	17	45	+ Driver's side lateral impact sensor
Not used	18	46	+ Passenger side lateral impact sensor
Not used	19	47	- Rear curtain airbag, driver's side
Not used	20	48	+ Rear curtain airbag, passenger's side
Not used	21	49	- Rear chest level side airbag on driver's side
Not used	22	50	+ Rear chest level side airbag, passenger side
Not used	23	51	+ Passenger front buckle pretensioner
Not used	24	52	- Rear pyrotechnic seat belt retractor, passenger side
Not used	25	53	+ Driver's lap belt pretensioner
- Driver's front buckle pretensioner	26	54	- Passenger lap belt pretensioner
+ Buckle pretensioner: passenger	27	55	Not used

GETtheMANUALS.org

75-track connector (ESPACE IV) (CONTINUED)

Description	Track	Track	Description
- Driver's lap belt pretensioner	28	56	+ Driver's seat position sensor
+ Passenger presence sheet	57	58	CAN H
CAN L	59	60	+ Driver's frontal airbag circuit 1
- Driver's frontal airbag circuit 2	61	62	+ Passenger frontal airbag circuit 1
- Passenger frontal airbag circuit 2	63	64	+ Airbag lock switch
Not used	65	66	+ Driver's front chest level side airbag
- Passenger front chest level side airbag	67	68	+ Front curtain airbag, driver's side
- Front curtain airbag, passenger's side	69	70	- Driver's side lateral impact sensor
- Passenger side lateral impact sensor	71	72	+ Rear curtain airbag, driver's side
- Rear curtain airbag, passenger's side	73	74	+ Rear chest level side airbag, driver's side
- Rear chest level side airbag, passenger side	75		

GETtheMANUALS.org

NOTE
During work on the airbag/seat belt pretensioner systems it is vital that you lock the computer using the diagnostic tool to prevent any risk of accidental triggering (all the trigger lines will be disabled). This 'locked' mode is obtained using command VP006 Locking the computer and is indicated by the instrument panel warning light being lit.

Replacing a system component:

The battery must be disconnected when removing and refitting any pyrotechnic system component (airbag module, pretensioner or seat belt retractor).

Replacing the airbag computer

BEFORE REPLACING THE COMPUTER IT IS ESSENTIAL THAT YOU CONTACT THE TECHLINE.

It is prohibited to use command RZ001 Clear fault memory when DF001 Computer is present or stored, to allow the failure of the returned computer to be analysed.

The airbag computers are sold in locked mode to avoid any risk of accidental triggering (all trigger lines are inhibited).

Locked mode is signalled by illumination of the airbag fault warning light on the instrument panel (**DF034 present**).

Follow this procedure when replacing an airbag computer:
– check that the ignition is switched off,
– replace the computer,
– modify the computer configuration, if necessary (see Note),
– set the driving side parameter using the command **CF291**,
– enter the VIN into the computer with diagnostic tool command **VP010 Write VIN**,
– switch off the ignition,
– carry out a check using the diagnostic tool,
– enter the After-Sales operation date with diagnostic tool command **VP008 Enter last After-Sales operation date**,
– unlock the computer using command VP0078 Unlocking the computer, only when no fault is present on the diagnostic tool (apart from **DF034**),
– verify that the warning light goes out.

Note:
The ignition module circuits not present on a vehicle are declared in open circuit following the replacement of the computer (default configuration with all trigger lines present).
It is therefore necessary to configure the trigger lines present on the vehicle using the diagnostic tool (note: the configuration of the ignition modules on CLIP are performed on 2 screens).

GETtheMANUALS.org

COMMAND MODE

CONFIGURATION READING

– **LC034:** **Vehicle type.**
This command is for checking that the computer fitted to the vehicle corresponds to the vehicle type.

– **LC088:** **Driving side.**
This command permits verification that the driving side is correctly configured, in relation to the vehicle.
In case of the absence of a configuration, use command **CF291 Driving side** to configure it.

CONFIGURATION

– **CF291:** **Driving side.**
This command allows configuration of the driving side type (right-hand drive or left-hand drive) of the vehicle.
It is essential to carry out this configuration.

SETTINGS

– **VP006:** **Lock computer.**
This command should be used for any operation on the system. It permits inhibition of all trigger lines.

– **VP007:** **Unlock computer.**
This command is for unlocking the computer (either a new computer or following locking).

– **VP008:** **Write date of the last After-Sales service.**
This command is used to enter the date the system was serviced.

– **VP010:** **Write VIN.**
This command is for entering the vehicle identification number (VIN) into the computer.

GETtheMANUALS.org

COMMAND MODE (CONTINUED)

SPECIAL COMMAND

– **SC004:** **Read impact context.**
Use this command during repair of the vehicle following an impact. It gives a list of the lines triggered and the system's status at the moment of impact from the computer that is to be replaced.

– **SC005:** **Configuration of system components.**
This command allows the computer to be configured to the equipment actually installed in the vehicle.

– **SC008:** **Ignition module configuration.**
The ignition module configuration command allows the computer to be configured to the equipment actually installed in the vehicle.

NOTE
IGNITION MODULE CONFIGURATION COVERS TWO SCREENS (Use the 'next page' button to access the second screen).

OTHER COMMAND

– **RZ001:** **Fault memory.**
This command is used for clearing the stored faults from the computer.

GETtheMANUALS.org

VELSATIS, LAGUNA II

Tool fault	Associated DTC	Diagnostic tool title
DF002	**9042**	Computer supply voltage
DF010	**9040**	Fault warning light circuit
DF028	**9041**	Passenger airbag status warning light circuit
DF034	**907E**	Computer locked
DF039	**9035**	Driver's side sensor circuit
DF040	**9036**	Passenger's side sensor circuit
DF060	**9050**	Multiplex network
DF061	**9002**	Passenger lap belt pretensioner circuit
DF065	**9031**	Driver's front seat position sensor circuit
DF066	**900E**	Passenger's rear chest level side airbag circuit
DF067	**900D**	Driver's rear chest level side airbag circuit
DF068	**900C**	Passenger's chest front side airbag circuit
DF069	**900A**	Passenger side curtain airbag circuit
DF070	**9009**	Driver's side curtain airbag circuit
DF071	**9008**	Driver's frontal airbag circuit 2
DF072	**9007**	Driver's frontal airbag circuit 1
DF073	**9004**	Passenger's side buckle pretensioner circuit
DF074	**9006**	Passenger's frontal airbag circuit 2
DF075	**9005**	Passenger's frontal airbag circuit 1
DF076	**9003**	Driver's side buckle pretensioner circuit
DF077	**900B**	Driver's front side chest airbag circuit
DF080	**9001**	Driver's lap belt pretensioner circuit
DF091	**9034**	Airbag locking switch circuit
DF092	**9037**	Front seat inertia reel locking function
DF094 to DF153	**9081 to 90D2**	Computer fault
DF187	**9044**	Trigger lines configuration
DF193	**907C**	Passenger airbag locking status change
DF194	**907F**	Computer to be replaced following impact
DF242	**907B**	Left-hand/right-hand drive configuration

GETtheMANUALS.org

ESPACE IV

Tool fault	Associated DTC	Diagnostic tool title
DF002	**9042**	Computer supply voltage
DF010	**9040**	Fault warning light circuit
DF028	**9041**	Passenger airbag status warning light circuit
DF034	**907E**	Computer locked
DF060	**9050**	Multiplex network
DF061	**9002**	Passenger lap belt pretensioner circuit
DF065	**9031**	Driver's front seat position sensor circuit
DF066	**900E**	Passenger's rear chest level side airbag circuit
DF067	**900D**	Driver's rear chest level side airbag circuit
DF068	**900C**	Passenger's chest front side airbag circuit
DF071	**9008**	Driver's frontal airbag circuit 2
DF072	**9007**	Driver's frontal airbag circuit 1
DF074	**9006**	Passenger's frontal airbag circuit 2
DF075	**9005**	Passenger's frontal airbag circuit 1
DF077	**900B**	Driver's front side chest level airbag circuit
DF080	**9001**	Driver's lap belt pretensioner circuit
DF091	**9034**	Airbag locking switch circuit
DF094 to DF153	**9081 to 90D2**	Computer fault
DF179	**9035**	Driver's side front side sensor circuit
DF180	**9036**	Passenger side front side sensor circuit
DF187	**9044**	Trigger lines configuration
DF193	**907C**	Passenger airbag locking status change
DF194	**907F**	Computer to be replaced following impact
DF206	**900A**	Front curtain airbag circuit, passenger side
DF207	**9009**	Front curtain airbag circuit, driver's side
DF208	**900F**	Rear curtain airbag circuit, driver's side
DF209	**9010**	Rear curtain airbag circuit, passenger side
DF210	**9003**	Front buckles pretensioner circuit
DF242	**907B**	Left-hand/right-hand drive configuration

GETtheMANUALS.org

DF002 **PRESENT**	COMPUTER SUPPLY VOLTAGE 1.DEF: Voltage outside permitted range of values 2.DEF: Too many micro-cutoffs

NOTES	**Special notes:** Use the **75-track B53 Elé. 1615** adapter when working on the computer connector (**cable 1**).

1.DEF ***2.DEF***	***NOTES***	None

Carry out the operations necessary to obtain the correct voltage supply to the computer: **10.5 volts ± 0.1 < correct voltage < 16 volts ± 0.1**.
– Check the battery charge.
– Check the charge circuit.
– Check the tightness and the condition of the battery terminals.
– Check the computer earth.
– Check the condition of the computer connections and the locking.

AFTER REPAIR	Clear the computer fault memory. Switch off the ignition. Carry out the check again using the diagnostic tool and, if there is no fault, unlock the computer.

GETtheMANUALS.org

DF010 PRESENT	FAULT WARNING LIGHT CIRCUIT 1.DEF: Fault finding performed by the instrument panel 2.DEF: Consistency

NOTES	None

Apply the fault finding procedure relevant to this fault in the instrument panel fault finding information section.

AFTER REPAIR	Clear the computer fault memory. Switch off the ignition. Carry out the check again using the diagnostic tool and, if there is no fault, unlock the computer.

GETtheMANUALS.org

DF028 PRESENT	PASSENGER AIRBAG STATUS INDICATOR LIGHT CIRCUIT 1.DEF: Fault finding performed by the instrument panel 2.DEF: Consistency

NOTES	None

Apply the fault finding procedure relevant to this fault in the instrument panel fault finding information section.

AFTER REPAIR	Clear the computer fault memory. Switch off the ignition. Carry out the check again using the diagnostic tool and, if there is no fault, unlock the computer.

GETtheMANUALS.org

DF034 PRESENT	COMPUTER LOCKED

NOTES	**Special note:** Never unlock a computer if other faults are present.

With the diagnostic tool, use command **VP007 Unlock computer** to unlock the airbag computer.

AFTER REPAIR	Clear the computer fault memory. Switch off the ignition. Carry out the check again using the diagnostic tool and, if there is no fault, unlock the computer.

GETtheMANUALS.org

DF039 PRESENT	DRIVER'S SIDE SENSOR CIRCUIT CC.0 : Short circuit to earth 1.DEF: No communication 2.DEF: Disrupted communication 3.DEF: Faulty sensor 4.DEF: Value outside permitted tolerance

NOTES	**Special notes:** Use the **75-track B53 Elé. 1615** adapter when working on the computer connector.

CC.0 ***1.DEF*** ***2.DEF***	***NOTES***	None

Lock the computer using the diagnostic tool (VP006).
Check that the driver's side sensor is connected correctly and check its connections.
Check the condition of the computer connections (**tracks 45 and 70**).
Check the condition of the **75-track** connector (locking system, connections, etc.)
Check the continuity and insulation of the connections between:

Bornier B53 **terminal 70** ⟶ **track 1** sensor connector

Bornier B53 **terminal 45** ⟶ **track 2** sensor connector

3.DEF ***4.DEF***	***NOTES***	None

Replace the driver's side sensor.

AFTER REPAIR	Reconnect the computer and the driver's side sensor then switch on the ignition again. Clear the computer fault memory then switch off the ignition. Carry out the check again using the diagnostic tool and, if there is no fault, unlock the computer.

GETtheMANUALS.org

DF040 PRESENT	PASSENGER SIDE SENSOR CIRCUIT CC.0 : Short circuit to earth 1.DEF: No communication 2.DEF: Disrupted communication 3.DEF: Faulty sensor 4.DEF: Value outside permitted tolerance

NOTES	**Special notes:** Use the **75-track B53 Elé. 1615** adapter when working on the computer connector.

CC.0 ***1.DEF*** ***2.DEF***	***NOTES***	None

Lock the computer using the diagnostic tool (VP006).
Check that the passenger's side sensor is connected correctly and check its connections.
Check the condition of the connections on the computer (**tracks 46 and 71**).
Check the condition of the **75-track** connector (locking system, connections, etc.)
Check the continuity and insulation of the connections between:

Bornier B53 **terminal 71** ⟶ **track 1** sensor connector

Bornier B53 **terminal 46** ⟶ **track 2** sensor connector

3.DEF ***4.DEF***	***NOTES***	None

Replace the passenger side sensor.

AFTER REPAIR	Reconnect the computer and the passenger's side sensor then switch on the ignition again. Clear the computer fault memory then switch off the ignition. Carry out the check again using the diagnostic tool and, if there is no fault, unlock the computer.

GETtheMANUALS.org

DF060 PRESENT	MULTIPLEX NETWORK 1.DEF: Multiplex network 2.DEF: Invalid vehicle speed 3.DEF: Vehicle speed too high 4.DEF: No instrument panel multiplex signal 5.DEF: No ABS multiplex signal

Vdiag 2C, 2D

NOTES	None

Carry out the fault finding procedure for the multiplex network.

AFTER REPAIR	Clear the computer memory then switch off the ignition. Carry out another check using the diagnostic tool.

GETtheMANUALS.org

DF060 PRESENT	MULTIPLEX NETWORK 1.DEF: Carry out the multiplex network fault finding procedure

Vdiag 24, 28

NOTES	None

Carry out the fault finding procedure for the multiplex network.

AFTER REPAIR	Clear the computer memory then switch off the ignition. Carry out another check using the diagnostic tool.

GETtheMANUALS.org

DF061 PRESENT	PASSENGER LAP BELT PRETENSIONER CIRCUIT CC : Short circuit CO : Open circuit CC.1 : Short circuit to + 12 V CC.0 : Short circuit to earth

NOTES	**Priorities when dealing with a number of faults:** If fault **DF061** is present with at least one of **DF068, DF073, DF092**, begin the fault finding by checking the **28-track** under-seat connector.
	Special notes: Never carry out measuring operations on trigger lines using any tool other than CLIP or XRBAG. Use the **75-track B53 Elé. 1615** adapter when working on the computer connector (**cable L**) and the **28-track Elé. 1616** adapter when working on the seat (**cable C**).

CO ***CC***	***NOTES***	None

Lock the computer using the diagnostic tool (VP006). Switch off the ignition and check that the ignition module of the passenger lap belt pretensioner is correctly connected.
Disconnect the ignition module of the passenger lap belt pretensioner and connect a dummy ignition module to the ignition module connector. Switch on the ignition and carry out a check using the diagnostic tool. Replace the passenger lap belt pretensioner if the fault is stored (the fault is no longer declared present).
Disconnect the computer connector and fit **the 75-track B53 Elé. 1615** test **adapter**. The CLIP or XRBAG tools must be used for measuring resistance on the **cable marked L** on the adapter. If the value obtained is correct, check the connections of the **75-track (tracks 29 and 54)** connector.
Remove the passenger seat and check the wiring on the **28-track** connector under the seat (**tracks 14 and 28**). Repair if necessary. Fit the **28-track Elé. 1616** test adapter on the seat. The CLIP or XRBAG tool must be used to measure the resistance in adapter **cable C**. If the value obtained is incorrect, the wiring is faulty between the **28-track** connector and the passenger lap belt pretensioner (**C1 and C3**). Replace the wiring if necessary.
If the fault persists, the wiring is faulty between the **75-track** computer connector and the passenger seat (**C0 and C1**).

AFTER REPAIR	Reconnect the computer and the pretensioner igniter, then switch on the ignition again. Clear the computer fault memory then switch off the ignition. Carry out the check again using the diagnostic tool and, if there is no fault, unlock the computer. Destroy the pretensioner if it has been replaced (tool **Elé. 1287**).

GETtheMANUALS.org

DF061 **CONTINUED**	

CC.1 ***CC.0***	***NOTES***	None

Lock the computer using the diagnostic tool (VP006). Disconnect the ignition module of the passenger lap belt pretensioner and connect a dummy ignition module to the ignition module connector. Switch on the ignition and carry out a check using the diagnostic tool. If the fault is now stored (fault no longer declared as present), check the condition of the seat wiring. Replace the passenger lap belt pretensioner if the wiring is not faulty.
Disconnect the computer connector and fit **the 75-track B53 Elé. 1615** test **adapter**. The CLIP or XRBAG tools must be used for measuring the insulation appropriately for the type of fault on the **cable marked L** on the adapter. If the value obtained is correct, check the connections of the **75-track (tracks 29 and 54)** connector.
Remove the passenger seat and check the wiring on the **28-track** connector under the seat (**tracks 14 and 28**). Repair if necessary. Fit the **28-track Elé. 1616** test adapter on the seat. The CLIP or XRBAG tool must be used to correctly measure the insulation for the type of fault in adapter **cable C**. If the value obtained is incorrect, the wiring is faulty between the **28-track** connector and the passenger lap belt pretensioner (**C1 and C3**). Replace the wiring if necessary.
If the fault is still present, the wiring is faulty between the **75-track** computer connector and the **28-track** front passenger seat connector (**C0 and C1**).

AFTER REPAIR	Reconnect the computer and the pretensioner igniter, then switch on the ignition again. Clear the computer fault memory then switch off the ignition. Carry out the check again using the diagnostic tool and, if there is no fault, unlock the computer. Destroy the pretensioner if it has been replaced (tool **Elé. 1287**).

GETtheMANUALS.org

DF065 **PRESENT**	DRIVER'S SEAT POSITION SENSOR CIRCUIT CO : Open circuit CC.0 : Short circuit to earth CC.1 : Short circuit to + 12 V 1.DEF: Below minimum threshold 2.DEF: Configuration 3.DEF: Faulty sensor

NOTES	**Priorities when dealing with a number of faults:** If fault **DF065** is present with at least one of **DF076, DF077, DF080**, begin the fault finding by checking the **28-track** under-seat connector.
	Special notes: Use the **75-track B53 Elé. 1615** adapter when working on the computer connector and the **28-track Elé. 1616** adapter when working on the seat.

LAGUNA II

CO ***CC.0*** ***CC.1*** ***1.DEF***	***NOTES***	None

Lock the computer using the diagnostic tool (VP006).
Fit the **75-track B53** test adapter and measure the resistance between **tracks 31 and 56**, with the seat in the fully forward and fully back positions.

In the fully forward position, the resistance is approximately: **400 Ω**
In the fully back position, the resistance is approximately: **100 Ω**.

If the resistances are correct, check the connections of the **75-track** computer connector.

Remove the driver's seat and check the wiring on the **28-track** connector under the seat.
Repair if necessary.
Fit the **28 track** test adapter to the seat and measure the resistance between **tracks 9 and 13**.
Is the measured value approximately 100 or 400 Ω?

AFTER REPAIR	Reconnect the computer, the seat position sensor, refit the seat then switch on the ignition. Clear the computer fault memory then switch off the ignition. Carry out the check again using the diagnostic tool and, if there is no fault, unlock the computer.

GETtheMANUALS.org

DF065 **CONTINUED**	

LAGUNA II

NO	Check the connection and the condition of the sensor connectors. Check the continuity and insulation of the connections between: Bornier **Track 9** → **Sensor connector** Bornier **Track 13** → **Sensor connector** If the checks are correct, replace the seat position sensor.
YES	Check the wiring again on the seat connector (**track 13 and 9**) as well as on the **75-track connector (tracks 31 and 56**). If the fault is still present, the wiring is faulty between the computer and the driver's seat (**C0/C1**). Replace the wiring if necessary.

2.DEF	***NOTES***	None

This fault corresponds to an inconsistency between the computer configuration and the vehicle equipment detected by the computer.
The computer detects the presence of the driver's seat position sensor, but the computer is configured **WITHOUT**.
Modify the computer configuration using the **SC005 Configuration of system components** command.

3.DEF	***NOTES***	None

Replace the driver's seat position sensor.

AFTER REPAIR	Reconnect the computer, the seat position sensor, refit the seat then switch on the ignition. Clear the computer fault memory then switch off the ignition. Carry out the check again using the diagnostic tool and, if there is no fault, unlock the computer.

GETtheMANUALS.org

DF065 **PRESENT**	DRIVER'S FRONT SEAT POSITION SENSOR CIRCUIT CO : Open circuit CC.0 : Short circuit to earth CC.1 : Short circuit to + 12 V 1.DEF: Below minimum threshold 2.DEF: Configuration 3.DEF: Faulty sensor

NOTES	**Priorities when dealing with a number of faults:** If fault **DF065** is present with at least one of **DF076, DF077, DF080**, begin the fault finding by checking the **28-track** under-seat connector.
	Special notes: Use the **75-track B53 Elé.1615** adapter when working on the computer connector and the **28-track Elé.1616** adapter when working on the seat.

VELSATIS

CO ***CC.0*** ***CC.1*** ***1.DEF***	***NOTES***	None

Lock the computer using the diagnostic tool (VP006).
Fit the **75-track B53** test adapter and measure the resistance between **tracks 31 and 56** with the seat in the fully forward and fully back positions.

In the fully forward position, the resistance is approximately: **400 Ω**
In the fully back position, the resistance is approximately: **100 Ω**

If the resistances are correct, check the connections of the **75-track** computer connector.

Remove the driver's seat and check the wiring on the **28-track** connector under the seat.
Repair if necessary.
Fit the **28-track** test adapter to the seat and measure the resistance between **tracks 9 and 23**.
Is the measured value approximately 100 Ω or 400 Ω?

AFTER REPAIR	Reconnect the computer, the seat position sensor, refit the seat then switch on the ignition. Clear the computer fault memory then switch off the ignition. Carry out the check again using the diagnostic tool and, if there is no fault, unlock the computer.

GETtheMANUALS.org

DF065 **CONTINUED**	

VELSATIS

NO	Check the connection and the condition of the sensor connectors. Check the continuity and insulation of the connections between: Bornier **Track 9** → **Sensor connector** Bornier **Track 23** → **Sensor connector** If the checks are correct, replace the seat position sensor.
YES	Check the seat connector connections (**tracks 9 and 23**) again, as well as those of the **75-track (tracks 31 and 56)** connector. If the fault is still present, the wiring is faulty between the computer and the driver's seat (**C0/C1**). Replace the wiring if necessary.

2.DEF	***NOTES***	None

This fault corresponds to an inconsistency between the computer configuration and the vehicle equipment detected by the computer.
The computer detects the presence of the driver's seat position sensor, but the computer is configured **WITHOUT**.
Modify the computer configuration using the **SC005 Configuration of system components** command.

3.DEF	***NOTES***	None

Replace the driver's seat position sensor.

AFTER REPAIR	Reconnect the computer, the seat position sensor, refit the seat then switch on the ignition. Clear the computer fault memory then switch off the ignition. Carry out the check again using the diagnostic tool and, if there is no fault, unlock the computer.

GETtheMANUALS.org

DF065 PRESENT	DRIVER'S FRONT SEAT POSITION SENSOR CIRCUIT CO : Open circuit CC.0 : Short circuit to earth CC.1 : Short circuit to + 12 V 1.DEF: Below minimum threshold 2.DEF: Configuration 3.DEF: Faulty sensor

NOTES	**Priorities when dealing with a number of faults:** If fault **DF065** is present with at least one of **DF077, DF080, DF210**, begin the fault finding by checking the **28-track** under-seat connector.
	Special notes: Use the **75-track B53 Elé.1615** adapter when working on the computer connector and the **28-track Elé.1616** adapter when working on the seat.

ESPACE IV

CO ***CC.0*** ***CC.1*** ***1.DEF***	***NOTES***	None

Lock the computer using the diagnostic tool (VP006).
Fit the **75-track B53** test adapter and measure the resistance between **tracks 31 and 56** with the seat in the fully forward and fully back positions.

In the fully forward position, the resistance is approximately: **400 Ω**
In the fully back position, the resistance is approximately: **100 Ω**

If the resistances are correct, check the connections of the **75-track** computer connector.

Remove the driver's seat and check the wiring on the **28-track** connector under the seat.
Repair if necessary.
Fit the **28-track** test adapter to the seat and measure the resistance between **tracks 9 and 23**.
Is the measured value approximately 100 Ω or 400 Ω?

AFTER REPAIR	Reconnect the computer, the seat position sensor, refit the seat then switch on the ignition. Clear the computer fault memory then switch off the ignition. Carry out the check again using the diagnostic tool and, if there is no fault, unlock the computer.

GETtheMANUALS.org

DF065 **CONTINUED**	

ESPACE IV

NO	Check the connection and the condition of the sensor connectors. Check the continuity and insulation of the connections between: Bornier **Track 9** → **Sensor connector** Bornier **Track 23** → **Sensor connector** If the checks are correct, replace the seat position sensor.
YES	Check the seat connector connections (**tracks 9 and 23**) again, as well as those of the **75-track (tracks 31 and 56)** connector. If the fault is still present, the wiring is faulty between the computer and the driver's seat (**C0/C1**). Replace the wiring if necessary.

2.DEF	***NOTES***	None

This fault corresponds to an inconsistency between the computer configuration and the vehicle equipment detected by the computer.
The computer detects the presence of the driver's seat position sensor, but the computer is configured **WITHOUT**.
Modify the computer configuration using the **SC005 Configuration of system components** command.

3.DEF	***NOTES***	None

Replace the driver's seat position sensor.

AFTER REPAIR	Reconnect the computer, the seat position sensor, refit the seat then switch on the ignition. Clear the computer fault memory then switch off the ignition. Carry out the check again using the diagnostic tool and, if there is no fault, unlock the computer.

GETtheMANUALS.org

DF066 **PRESENT**	PASSENGER REAR CHEST LEVEL SIDE AIRBAG CIRCUIT CC : Short circuit CO : Open circuit CC.1 : Short circuit to + 12 V CC.0 : Short circuit to earth

NOTES	**Special notes:** Never carry out measuring operations on trigger lines using any tool other than CLIP or XRBAG. Use the **75-track B53 Elé. 1615** adapter for working on the computer connector (**cable X**).

CO ***CC***	***NOTES***	**Special notes:** Correct the trigger line configuration if the vehicle is not fitted with rear lateral airbags.

Lock the computer using the diagnostic tool (VP006). Switch off the ignition and check that the ignition module of the passenger's rear chest level side airbag is correctly connected.
Disconnect the ignition module from the passenger's rear chest level side airbag and connect a dummy ignition module to the ignition module connector. Switch on the ignition and carry out a check using the diagnostic tool. Replace the passenger's rear chest level side airbag if the fault becomes stored (fault no longer declared present).
Check the wiring on the **75-track** computer connector. Fit the **75-track B53** test adapter. CLIP or XRBAG must be used for checking the resistance on **cable X** of the adapter. If the value obtained is correct, check the computer wiring (**tracks 50 and 75**). If the value obtained is incorrect, the wiring is faulty between the computer and the rear chest level passenger-side airbag module (**C0/C3**). Replace the wiring if necessary.

AFTER REPAIR	Reconnect the computer and the ignition module of the passenger's rear chest level side airbag module then switch on the ignition. Clear the computer fault memory then switch off the ignition. Carry out the check again using the diagnostic tool and, if there is no fault, unlock the computer. When replacing the airbag module, do not forget to reconnect the earth on the new module. Destroy the passenger's rear chest level side airbag module if it has been replaced (**Elé. 1287**).

GETtheMANUALS.org

DF066 **CONTINUED**	

CC.1 ***CC.0***	***NOTES***	None

Lock the computer using the diagnostic tool. Disconnect the ignition module from the passenger's rear chest level side airbag and connect a dummy ignition module to the ignition module connector. Switch on the ignition and carry out a check using the diagnostic tool. Replace the passenger's rear chest level side airbag if the fault becomes stored (fault no longer declared as present).
Check the wiring on the **75-track** computer connector. Fit the **75-track B53** test adapter. The CLIP or XRBAG tools must be used for measuring the insulation appropriately for the type of fault on **cable X** on the adapter. If the value obtained is correct, check the computer wiring (**tracks 50 and 75**). If the value obtained is incorrect, the wiring is faulty between the computer and the rear chest level airbag module (**C0/C3**). Replace the wiring if necessary.

AFTER REPAIR	Reconnect the computer and the ignition module of the passenger's rear chest level side airbag module then switch on the ignition. Clear the computer fault memory then switch off the ignition. Carry out the check again using the diagnostic tool and, if there is no fault, unlock the computer. When replacing the airbag module, do not forget to reconnect the earth on the new module. Destroy the passenger's rear chest level side airbag module if it has been replaced (**Elé. 1287**).

GETtheMANUALS.org

DF066 **PRESENT**	PASSENGER REAR CHEST LEVEL SIDE AIRBAG CIRCUIT CC : Short circuit CO : Open circuit CC.1 : Short circuit to + 12 V CC.0 : Short circuit to earth

NOTES	**Special notes:** Never carry out measuring operations on trigger lines using any tool other than CLIP or XRBAG. Use the **75-track B53 Elé. 1615** adapter for working on the computer connector (**cable X**) and the **29-track Elé. 1684** adapter for working on the passenger rear door.

CO ***CC***	***NOTES***	**Special notes:** Correct the trigger line configuration if the vehicle is not fitted with rear lateral airbags.

Lock the computer using the diagnostic tool (VP006). Switch off the ignition and check that the ignition module of the passenger's rear chest level side airbag is correctly connected.
Disconnect the ignition module from the passenger's rear chest level side airbag and connect a dummy ignition module to the ignition module connector. Switch on the ignition and carry out a check using the diagnostic tool. Replace the passenger's rear chest level side airbag if the fault becomes stored (fault no longer declared present).
Disconnect the passenger compartment/rear passenger door connector **R156** and check the connector connections on the door side (**tracks A1 and B1**). Repair if necessary. Attach the **29-track Elé. 1684** test adapter to the airbag wiring (**point C1**). The CLIP, NXR or XRBAG tool must be used for measuring the resistance on the **cable** If the value obtained is incorrect, the wiring is faulty between connector **R156** and the passenger rear chest level side airbag (**C1/C3**), replace the wiring if necessary.
Check the connections again on the intermediate connector **R156 on the passenger compartment side (tracks A1 and B1)** as well as those on the **75-track (tracks 50 and 75)** connector. If the fault persists, the wiring is faulty between the computer and the intermediate connector **R156 (C0/C1)**. Replace the wiring between the computer and the passenger rear door/passenger compartment connector **R156** if necessary.

AFTER REPAIR	Reconnect the computer and the ignition module of the passenger's rear chest level side airbag module then switch on the ignition. Clear the computer fault memory then switch off the ignition. Carry out the check again using the diagnostic tool and, if there is no fault, unlock the computer. When replacing the airbag module, do not forget to reconnect the earth on the new module. Destroy the passenger's rear chest level side airbag module if it has been replaced (**Elé. 1287**).

GETtheMANUALS.org

DF066 **CONTINUED**	

CC.1 ***CC.0***	***NOTES***	None

Lock the computer using the diagnostic tool. Disconnect the ignition module from the passenger's rear chest level side airbag and connect a dummy ignition module to the ignition module connector. Switch on the ignition and carry out a check using the diagnostic tool. Replace the passenger's rear chest level side airbag if the fault becomes stored (fault no longer declared as present).
Disconnect the passenger compartment/rear passenger door connector **R156** and check the connector connections on the door side (**tracks A1 and B1**). Repair if necessary. Attach the **29-track Elé. 1684** test adapter to the airbag wiring (**point C1**). The CLIP or XRBAG tool must be used to measure the proper insulation for the type of fault in the **cable**. If the value obtained is incorrect, the wiring is faulty between connector **R156** and the passenger rear chest level side airbag (**C1/C3**), replace the wiring if necessary.
Check the connections again on the intermediate connector **R156 on the passenger compartment side (tracks A1 and B1)** as well as those on the **75-track (tracks 50 and 75)** connector. If the fault persists, the wiring is faulty between the computer and the intermediate connector **R156 (C0/C1)**. Replace the wiring between the computer and the passenger rear door/passenger compartment connector **R156** if necessary.

AFTER REPAIR	Reconnect the computer and the ignition module of the passenger's rear chest level side airbag module then switch on the ignition. Clear the computer fault memory then switch off the ignition. Carry out the check again using the diagnostic tool and, if there is no fault, unlock the computer. When replacing the airbag module, do not forget to reconnect the earth on the new module. Destroy the passenger's rear chest side airbag module if it has been replaced (tool **Elé. 1287**).

GETtheMANUALS.org

DF067 PRESENT	DRIVER'S REAR CHEST LEVEL SIDE AIRBAG CIRCUIT CC : Short circuit CO : Open circuit CC.1 : Short circuit to + 12 V CC.0 : Short circuit to earth

NOTES	**Special notes:** Never carry out measuring operations on trigger lines using any tool other than CLIP or XRBAG. Use the **75-track B53 Elé. 1615** adapter for working on the computer connector (**cable W**).

CO ***CC***	***NOTES***	**Special notes:** Correct the trigger line configuration if the vehicle is not fitted with rear lateral airbags.

Lock the computer using the diagnostic tool (VP006). Switch off the ignition and check that the ignition module of the driver's rear chest level side airbag is correctly connected.
Disconnect the ignition module from the driver's rear chest level side airbag and connect a dummy ignition module to the ignition module connector. Switch on the ignition and carry out a check using the diagnostic tool. Replace the driver's rear chest level side airbag if the fault becomes stored (fault no longer declared present).
Check the wiring on the **75-track** computer connector. Fit the **75-track B53** test adapter. The CLIP or XRBAG tool must be used for measuring the resistance on **cable W** of the adapter. If the value obtained is correct, check the computer wiring (**tracks 49 and 74**). If the value obtained is incorrect, the wiring is faulty between the computer and the rear chest level side airbag module (**C0/C3**). Replace the wiring if necessary.

AFTER REPAIR	Reconnect the computer and the ignition module of the driver's rear chest level side airbag module then switch on the ignition. Clear the computer fault memory then switch off the ignition. Carry out the check again using the diagnostic tool and, if there is no fault, unlock the computer. When replacing the airbag module, do not forget to reconnect the earth on the new module. Destroy the driver's rear chest level side airbag module if it has been replaced (tool **Elé. 1287**).

GETtheMANUALS.org

DF067 **CONTINUED**	

CC.1 ***CC.0***	***NOTES***	None

Lock the computer using the diagnostic tool (VP006). Disconnect the ignition module from the driver's rear chest level side airbag and connect a dummy ignition module to the ignition module connector. Switch on the ignition and carry out a check using the diagnostic tool. Replace the driver's rear chest level side airbag if the fault becomes stored (fault no longer declared present).
Check the wiring on the **75-track** computer connector. Fit the **75-track B53** test adapter. The CLIP or XRBAG tool must be used for measuring the insulation as appropriate for the type of fault on **cable W** of the adapter. If the value obtained is correct, check the computer wiring (**tracks 49 and 74**). If the value obtained is incorrect, the wiring is faulty between the computer and the rear chest level driver's-side airbag module (**C0/C3**). Replace the wiring if necessary.

AFTER REPAIR	Reconnect the computer and the ignition module of the driver's rear chest level side airbag module then switch on the ignition. Clear the computer fault memory then switch off the ignition. Carry out the check again using the diagnostic tool and, if there is no fault, unlock the computer. When replacing the airbag module, do not forget to reconnect the earth on the new module. Destroy the driver's rear chest level side airbag module if it has been replaced (tool **Elé. 1287**).

GETtheMANUALS.org

DF067 PRESENT	DRIVER'S REAR CHEST LEVEL SIDE AIRBAG CIRCUIT CC : Short circuit CO : Open circuit CC.1 : Short circuit to + 12 V CC.0 : Short circuit to earth

NOTES	**Special notes:** Never carry out measuring operations on trigger lines using any tool other than CLIP or XRBAG. Use the **75-track B53 Elé. 1615** adapter for working on the computer connector (**cable W**) and the **29-track Elé. 1684** adapter for working on the passenger rear door.

CO ***CC***	***NOTES***	**Special notes:** Correct the trigger line configuration if the vehicle is not fitted with rear lateral airbags.

Lock the computer using the diagnostic tool (VP006).
Switch off the ignition and check that the ignition module of the driver's rear chest level side airbag is correctly connected.

Disconnect the ignition module from the driver's rear chest level side airbag and connect a dummy ignition module to the ignition module connector.
Switch on the ignition and carry out a check using the diagnostic tool.
Replace the driver's rear chest level side airbag if the fault becomes stored (fault no longer declared present).

Disconnect the passenger compartment/rear driver's door connector **R155** and check the connector connections on the door side (**tracks A1 and B1**). Repair if necessary.
Attach the **29-track Elé. 1684** test adapter to the airbag wiring (**point C1**).
The CLIP, NXR or XRBAG tool must be used for measuring the resistance on the cable
If the value obtained is incorrect, the wiring is faulty between connector **R155** and the driver's rear chest side airbag (**C1/C3**), replace the wiring if necessary.

Check the connections again on the intermediate connector **R155 on the passenger compartment side (tracks A1 and B1)** as well as those on the **75-track (tracks 49 and 74)** connector.
If the fault persists, the wiring is faulty between the computer and the intermediate connector **R155 (C0/C1)**.
Replace the wiring if necessary.

AFTER REPAIR	Reconnect the computer and the ignition module of the driver's rear chest level side airbag module then switch on the ignition. Clear the computer fault memory then switch off the ignition. Carry out the check again using the diagnostic tool and, if there is no fault, unlock the computer. When replacing the airbag module, do not forget to reconnect the earth on the new module. Destroy the driver's rear chest level side airbag module if it has been replaced (tool **Elé. 1287**).

GETtheMANUALS.org

DF067 **CONTINUED**	

CC.1 ***CC.0***	***NOTES***	None

Lock the computer using the diagnostic tool (VP006). Disconnect the ignition module from the driver's rear chest level side airbag and connect a dummy ignition module to the ignition module connector. Switch on the ignition and carry out a check using the diagnostic tool. Replace the driver's rear chest level side airbag if the fault becomes stored (fault no longer declared present).
Disconnect the passenger compartment/rear driver's door connector **R155** and check the connector connections on the door side (**tracks A1 and B1**). Repair if necessary. Attach the **29-track Elé. 1684** test adapter to the airbag wiring (**point C1**). The CLIP or XRBAG tool must be used to measure the proper insulation for the type of fault in **the cable**. If the value obtained is incorrect, the wiring is faulty between connector **R155** and the driver's rear chest level side airbag (**C1/C3**), replace the wiring if necessary.
Check the connections again on the intermediate connector **R156 on the passenger compartment side (tracks A1 and B1)** as well as those on the **75-track (tracks 50 and 75)** connector. If the fault persists, the wiring is faulty between the computer and the intermediate connector **R155 (C0/C1)**. Replace the wiring between the computer and the driver's rear door/passenger compartment connector **R155** if necessary.

AFTER REPAIR	Reconnect the computer and the ignition module of the driver's rear chest level side airbag module then switch on the ignition. Clear the computer fault memory then switch off the ignition. Carry out the check again using the diagnostic tool and, if there is no fault, unlock the computer. When replacing the airbag module, do not forget to reconnect the earth on the new module. Destroy the driver's rear chest level side airbag module if it has been replaced (tool **Elé. 1287**).

GETtheMANUALS.org

DF068 PRESENT	PASSENGER CHEST FRONT SIDE AIRBAG CIRCUIT CC : Short circuit CO : Open circuit CC.1 : Short circuit to + 12 V CC.0 : Short circuit to earth

NOTES	**Priorities when dealing with a number of faults:** If faults **DF068 and DF073** are present, begin the fault finding by checking the **28-track** under-seat connector.
	Special notes: Never carry out measuring operations on trigger lines using any tool other than CLIP or XRBAG. Use the **75-track B53 Elé. 1615** adapter when working on the computer connector (**cable R**) and the **28-track Elé. 1616** adapter when working on the seat (**cable C**).

LAGUNA II

CO ***CC***	***NOTES***	None

Lock the computer using the diagnostic tool (VP006), disconnect the computer connector and fit the **75-track B53** adapter. The CLIP or XRBAG tools must be used for checking resistance of the **cable marked R** on the adapter. If the value obtained is correct, check the connections of the **75-track (tracks 42 and 67)** connector.

Remove the passenger seat and check the wiring on the **28-track** connector under the seat. Repair if necessary. Fit the **28-track** test adapter to the seat (**point C1**).
The CLIP or XRBAG tool must be used to measure the resistance in adapter **cable C**.
Is the value obtained correct?

AFTER REPAIR	Reconnect the computer and the ignition module of the passenger's front chest side airbag module then switch on the ignition again. Clear the computer fault memory then switch off the ignition. Carry out the check again using the diagnostic tool and, if there is no fault, unlock the computer. When replacing the airbag module, do not forget to reconnect the earth on the new module. Destroy the passenger's chest side airbag module if it has been replaced (tool **Elé. 1287**).

GETtheMANUALS.org

DF068 **CONTINUED 1**	

LAGUNA II

NO	Check the seat connector connections (**tracks 28 and 14**). Remove the trim from the front passenger seat and check that the side airbag ignition module is connected correctly.
	Disconnect the side airbag ignition module, connect a dummy ignition module to the ignition module connector and re-measure the resistance on **wire C** of the adapter. – If the value obtained is correct, replace the passenger's front chest side airbag module. – If the value obtained is still not correct, replace the wiring between **points C1 and C3** (seat wiring).
YES	Check the seat connector connections (**tracks 14 and 28**) again, as well as those of the **75-track (tracks 42 and 67)** connector.
	If the fault is still present, the wiring is faulty between the computer and the front passenger seat (**C0/C1**). Replace the wiring if necessary.

AFTER REPAIR	Reconnect the computer and the ignition module of the passenger's front chest side airbag module then switch on the ignition again. Clear the computer fault memory then switch off the ignition. Carry out the check again using the diagnostic tool and, if there is no fault, unlock the computer. When replacing the airbag module, do not forget to reconnect the earth on the new module. Destroy the passenger's chest side airbag module if it has been replaced (tool **Elé. 1287**).

GETtheMANUALS.org

DF068 **CONTINUED 2**	

LAGUNA II

CC.1 ***CC.0***	***NOTES***	None

Lock the computer using the diagnostic tool (VP006), disconnect the computer connector and fit the **75-track B53** adapter. The CLIP or XRBAG tools must be used for measuring the insulation appropriately for the type of fault on the **cable marked R** on the adapter.
If the value obtained is correct, check the connections of the **75-track (tracks 42 and 67)** connector.

Remove the passenger seat and check the wiring on the **28-track** connector under the seat. Repair if necessary. Fit the **28-track** test adapter to the seat (**point C1**).
The CLIP or XRBAG tool must be used to correctly measure the insulation for the type of fault in adapter **cable C**.
Is the value obtained correct?

NO

Check the seat connector connections (**tracks 14 and 28**).
Remove the trim from the front passenger seat and check that the side airbag ignition module is connected correctly.

Disconnect the side airbag ignition module, connect a dummy ignition module to the ignition module connector and again measure the proper insulation for the type of fault, in **cable C** of the adapter.
– If the value obtained is correct, replace the passenger's front chest side airbag module.
– If the value obtained is still not correct, replace the wiring between **points C1 and C3** (seat wiring).

YES

Check the seat connector connections (**tracks 14 and 28**) again, as well as those of the **75-track (tracks 42 and 67)** connector.

If the fault is still present, the wiring is faulty between the computer and the front passenger seat (**C0/C1**). Replace the wiring if necessary.

AFTER REPAIR	Reconnect the computer and the ignition module of the passenger's front chest side airbag module then switch on the ignition again. Clear the computer fault memory then switch off the ignition. Carry out the check again using the diagnostic tool and, if there is no fault, unlock the computer. When replacing the airbag module, do not forget to reconnect the earth on the new module. Destroy the passenger's chest side airbag module if it has been replaced (tool **Elé. 1287**).

GETtheMANUALS.org

DF068 PRESENT	PASSENGER CHEST FRONT SIDE AIRBAG CIRCUIT CC : Short circuit CO : Open circuit CC.1 : Short circuit to + 12 V CC.0 : Short circuit to earth

NOTES	**Priorities when dealing with a number of faults:** If faults **DF068 and DF073** are present, begin the fault finding by checking the **28-track** under-seat connector.
	Special notes: Never carry out measuring operations on trigger lines using any tool other than CLIP or XRBAG. Use the **75-track B53 Elé. 1615** adapter when operating on the computer connector (**cable R**) and the **28-track Elé. 1616** adapter when operating on the seat (**cable B**).

VELSATIS

CO ***CC***	***NOTES***	None

Lock the computer using the diagnostic tool (VP006), disconnect the computer connector and fit the **75-track B53** adapter. The CLIP or XRBAG tools must be used for checking resistance of the **cable marked R** on the adapter. If the value obtained is correct, check the connections of the **75-track (tracks 42 and 67)** connector.

Remove the passenger seat and check the wiring on the **28-track** connector under the seat. Repair if necessary. Fit the **28-track** test adapter to the seat (**point C1**).
The CLIP or XRBAG must be used to measure the resistance in adapter **cable B**.
Is the value obtained correct?

AFTER REPAIR	Reconnect the computer and the ignition module of the passenger's front chest side airbag module then switch on the ignition again. Clear the computer fault memory then switch off the ignition. Carry out the check again using the diagnostic tool and, if there is no fault, unlock the computer. When replacing the airbag module, do not forget to reconnect the earth on the new module. Destroy the passenger's chest side airbag module if it has been replaced (tool **Elé. 1287**).

GETtheMANUALS.org

DF068 **CONTINUED 1**	

VELSATIS

NO	Check the seat connector connections (**tracks 7 and 21**). Remove the trim from the front passenger seat and check that the side airbag ignition module is connected correctly.
	Disconnect the passenger airbag ignition module, connect a dummy ignition module to the ignition module connector then measure the resistance on **cable B** of the adapter again. – If the value obtained is correct, replace the passenger's front chest side airbag module. – If the value obtained is still not correct, replace the wiring between **points C1 and C3** (seat wiring).
YES	Check the seat connector connections (**tracks 7 and 21**) again, as well as those of the **75-track connector (tracks 42 and 67)**.
	If the fault is still present, the wiring is faulty between the computer and the front passenger seat (**C0/C1**). Replace the wiring if necessary.

AFTER REPAIR	Reconnect the computer and the ignition module of the passenger's front chest side airbag module then switch on the ignition again. Clear the computer fault memory then switch off the ignition. Carry out the check again using the diagnostic tool and, if there is no fault, unlock the computer. When replacing the airbag module, do not forget to reconnect the earth on the new module. Destroy the passenger's chest side airbag module if it has been replaced (tool **Elé. 1287**).

GETtheMANUALS.org

DF068 **CONTINUED 2**	

VELSATIS

CC.1 ***CC.0***	***NOTES***	None

Lock the computer using the diagnostic tool (VP006), disconnect the computer connector and fit the **75-track B53** adapter. The CLIP or XRBAG tools must be used for measuring the insulation appropriately for the type of fault on the **cable marked R** on the adapter.
If the value obtained is correct, check the connections of the **75-track (tracks 42 and 67)** connector.

Remove the passenger seat and check the wiring on the **28-track** connector under the seat. Repair if necessary. Fit the **28-track** test adapter to the seat (**point C1**).
The CLIP or XRBAG tool must be used to correctly measure the insulation for the type of fault in the adapter **cable marked B**.
Is the value obtained correct?

NO

Check the seat connector connections (**tracks 7 and 21**).
Remove the trim from the front passenger seat and check that the side airbag ignition module is connected correctly.

Disconnect the side airbag ignition module, connect a dummy ignition module to the ignition module connector and measure the proper insulation for the type of fault, in **cable B** of the adapter again.
– If the value obtained is correct, replace the passenger's front chest side airbag module.
– If the value obtained is still not correct, replace the wiring between **points C1 and C3** (seat wiring).

YES

Check the seat connector connections (**tracks 7 and 21**) again, as well as those of the **75-track connector (tracks 42 and 67)**.

If the fault is still present, the wiring is faulty between the computer and the front passenger seat (**C0/C1**). Replace the wiring if necessary.

AFTER REPAIR	Reconnect the computer and the ignition module of the passenger's front chest side airbag module then switch on the ignition again. Clear the computer fault memory then switch off the ignition. Carry out the check again using the diagnostic tool and, if there is no fault, unlock the computer. When replacing the airbag module, do not forget to reconnect the earth on the new module. Destroy the passenger's chest side airbag module if it has been replaced (tool **Elé. 1287**).

GETtheMANUALS.org

DF068 PRESENT	PASSENGER CHEST FRONT SIDE AIRBAG CIRCUIT CC : Short circuit CO : Open circuit CC.1 : Short circuit to + 12 V CC.0 : Short circuit to earth

NOTES	**Priorities when dealing with a number of faults:** If **DF068** is present with at least one of **DF061 or DF210**, begin the fault finding by checking the **28-track** under-seat connector.
	Special notes: Never carry out measuring operations on trigger lines using any tool other than CLIP or XRBAG. Use the **75-track B53 Elé. 1615** adapter when operating on the computer connector (**cable R**) and the **28-track Elé. 1616** adapter when operating on the seat (**cable B**).

ESPACE IV

CO ***CC***	***NOTES***	None

Lock the computer with the diagnostic tool, disconnect the computer connector and attach the **75 track B53 adapter**. The CLIP or XRBAG tools must be used for checking resistance of the **cable marked R** on the adapter. If the value obtained is correct, check the connections of the **75-track (tracks 42 and 67)** connector.
Remove the passenger seat and check the wiring on the **28-track** connector under the seat. Repair if necessary. Fit the **28-track** test adapter to the seat (**point C1**). The CLIP or XRBAG must be used to measure the resistance in adapter **cable B**. **Is the value obtained correct?**

AFTER REPAIR	Reconnect the computer and the ignition module of the passenger's front chest side airbag module then switch on the ignition again. Clear the computer fault memory then switch off the ignition. Carry out the check again using the diagnostic tool and, if there is no fault, unlock the computer. When replacing the airbag module, do not forget to reconnect the earth on the new module. Destroy the passenger's chest side airbag module if it has been replaced (tool **Elé. 1287**).

GETtheMANUALS.org

DF068 **CONTINUED 1**	

ESPACE IV

NO	Check the seat connector connections (**tracks 7 and 21**). Remove the trim from the front passenger seat and check that the side airbag ignition module is connected correctly.
	Disconnect the passenger airbag ignition module, connect a dummy ignition module to the ignition module connector then measure the resistance on **cable B** of the adapter again. – If the value obtained is correct, replace the passenger's front chest side airbag module. – If the value obtained is still not correct, replace the wiring between **points C1 and C3** (seat wiring).
YES	Check the seat connector connections (**tracks 7 and 21**) again, as well as those of the **75-track connector (tracks 42 and 67)**.
	If the fault is still present, the wiring is faulty between the computer and the front passenger seat (**C0/C1**). Replace the wiring if necessary.

AFTER REPAIR	Reconnect the computer and the ignition module of the passenger's front chest side airbag module then switch on the ignition again. Clear the computer fault memory then switch off the ignition. Carry out the check again using the diagnostic tool and, if there is no fault, unlock the computer. When replacing the airbag module, do not forget to reconnect the earth on the new module. Destroy the passenger's chest side airbag module if it has been replaced (tool **Elé. 1287**).

GETtheMANUALS.org

DF068 **CONTINUED 2**	

ESPACE IV

CC.1 ***CC.0***	***NOTES***	None

Lock the computer using the diagnostic tool (VP006), disconnect the computer connector and fit the **75-track B53** adapter. The CLIP or XRBAG tools must be used for measuring the insulation appropriately for the type of fault on the **cable marked R** on the adapter.
If the value obtained is correct, check the connections of the **75-track (tracks 42 and 67)** connector.

Remove the passenger seat and check the wiring on the **28-track** connector under the seat. Repair if necessary. Fit the **28-track** test adapter to the seat (**point C1**).
The CLIP or XRBAG tool must be used to correctly measure the insulation for the type of fault in the adapter **cable marked B**.
Is the value obtained correct?

NO

Check the seat connector connections (**tracks 7 and 21**).
Remove the trim from the front passenger seat and check that the side airbag ignition module is connected correctly.

Disconnect the side airbag ignition module, connect a dummy ignition module to the ignition module connector and measure the proper insulation for the type of fault, in **cable B** of the adapter again.
– If the value obtained is correct, replace the passenger's front chest side airbag module.
– If the value obtained is still not correct, replace the wiring between **points C1 and C3** (seat wiring).

YES

Check the seat connector connections (**tracks 7 and 21**) again, as well as those of the **75-track connector (tracks 42 and 67)**.

If the fault is still present, the wiring is faulty between the computer and the front passenger seat (**C0/C1**). Replace the wiring if necessary.

AFTER REPAIR	Reconnect the computer and the ignition module of the passenger's front chest side airbag module then switch on the ignition again. Clear the computer fault memory then switch off the ignition. Carry out the check again using the diagnostic tool and, if there is no fault, unlock the computer. When replacing the airbag module, do not forget to reconnect the earth on the new module. Destroy the passenger's chest side airbag module if it has been replaced (tool **Elé. 1287**).

GETtheMANUALS.org

DF069 PRESENT	PASSENGER CURTAIN AIRBAG CIRCUIT CC : Short circuit CO : Open circuit CC.1 : Short circuit to + 12 V CC.0 : Short circuit to earth

NOTES	**Special notes:** Never carry out measuring operations on trigger lines using any tool other than CLIP or XRBAG. Use the **75-track B53 Elé. 1615** adapter for working on the computer connector (**cable T**) and the **6 track Elé. 1617 (cable B)** adapter.

CO ***CC***	***NOTES***	None

Lock the computer using the diagnostic tool (VP006). Switch off the ignition and check that the ignition module of the passenger side curtain airbag is connected correctly (located behind the mounting bracket of the rear parcel shelf).
Disconnect the ignition module from the passenger side curtain airbag and connect a dummy ignition module to the ignition module connector. Switch on the ignition and carry out a check using the diagnostic tool. Replace the passenger side curtain airbag if the fault is now stored (fault no longer declared as present).
Remove the trim from the rear left-hand sill panel and check the wiring on the yellow **6-track** connector on the sill panel in the rear position (**tracks 5 and 6**). Repair if necessary. Fit the **6-track** test adapter to the airbag wiring (point **C1**). The CLIP or XRBAG must be used to measure the resistance in adapter **cable B**. If the value obtained is incorrect, the wiring is faulty between the **6-track** connector and the curtain airbag (**C1/C3**). Replace the wiring if necessary.
Check the wiring again on the **6 track (tracks 5 and 6)** intermediate connector as well as the wiring of the **75 track connector (tracks 44 and 69)**. If the fault is still present, the wiring is faulty between the computer and the **6-track** intermediate connector (C0/C1). Replace the wiring if necessary.

AFTER REPAIR	Reconnect the computer and the ignition module of the passenger side curtain airbag module then switch the ignition back on. Clear the computer fault memory then switch off the ignition. Carry out the check again using the diagnostic tool and, if there is no fault, unlock the computer. When replacing the airbag module, do not forget to reconnect the earth on the new module. Destroy the passenger side curtain airbag module if it has been replaced (tool **Elé. 1287**).

GETtheMANUALS.org

DF069 **CONTINUED**	

CC.1 ***CC.0***	***NOTES***	None

Lock the computer using the diagnostic tool (VP006). Switch off the ignition and check that the ignition module of the passenger side curtain airbag is connected correctly (located behind the mounting bracket of the rear parcel shelf).
Disconnect the ignition module from the passenger side curtain airbag and connect a dummy ignition module to the ignition module connector. Switch on the ignition and carry out a check using the diagnostic tool. Replace the passenger side curtain airbag if the fault becomes stored (fault no longer declared present).
Remove the trim from the rear left-hand sill panel and check the wiring on the yellow **6-track** connector on the sill panel in the rear position (**tracks 5 and 6**). Repair if necessary. Fit the **6-track** test adapter to the airbag wiring (**point C1**). The CLIP or XRBAG tool must be used to correctly measure the insulation for the type of fault in the adapter **cable marked B**. If the value obtained is incorrect, the wiring is faulty between the **6-track** connector and the curtain airbag (**C1/C3**). Replace the wiring if necessary.
Check the wiring again on the **6 track (tracks 5 and 6)** intermediate connector as well as the wiring of the **75 track connector (tracks 44 and 69)**. If the fault is still present, the wiring is faulty between the computer and the **6-track** intermediate connector **(C0/C1)**. Replace the wiring if necessary.

AFTER REPAIR	Reconnect the computer and the ignition module of the passenger side curtain airbag module then switch the ignition back on. Clear the computer fault memory then switch off the ignition. Carry out the check again using the diagnostic tool and, if there is no fault, unlock the computer. When replacing the airbag module, do not forget to reconnect the earth on the new module. Destroy the passenger side curtain airbag module if it has been replaced (tool **Elé. 1287**).

GETtheMANUALS.org

DF070 PRESENT	DRIVER SIDE CURTAIN AIRBAG CIRCUIT CC : Short circuit CO : Open circuit CC.1 : Short circuit to + 12 V CC.0 : Short circuit to earth

NOTES	**Special notes:** Never carry out measuring operations on trigger lines using any tool other than CLIP or XRBAG. Use the **75 track B53 Elé. 1615** adapter for working on the computer connector (**cable S**) and the **6-track Elé. 1617 (cable A)** adapter.

CO ***CC***	***NOTES***	None

Lock the computer using the diagnostic tool (VP006). Switch off the ignition and check that the ignition module of the driver's side curtain airbag is connected correctly (located behind the mounting bracket of the rear parcel shelf).
Disconnect the ignition module from the driver side curtain airbag and connect a dummy ignition module to the ignition module connector. Switch on the ignition and carry out a check using the diagnostic tool. Replace the driver's side curtain airbag if the fault becomes stored (fault no longer declared present).
Remove the trim from the rear left-hand sill panel and check the wiring on the yellow **6-track** connector on the sill panel in the rear position (**tracks 1 and 2**). Repair if necessary. Fit the **6-track** test adapter to the airbag wiring (point **C1**). The CLIP or XRBAG tool must be used for checking resistance in adapter **cable A**. If the value obtained is incorrect, the wiring is faulty between the **6-track** connector and the curtain airbag (**C1/C3**). Replace the wiring if necessary.
Check the wiring again on the **6-track (tracks 1 and 2)** intermediate connector as well as the wiring of the **75-track connector (tracks 43 and 68)**. If the fault is still present, the wiring is faulty between the computer and the **6-track** intermediate connector **(C0/C1)**. Replace the wiring if necessary.

AFTER REPAIR	Reconnect the computer and the ignition module of the driver's side curtain airbag module then switch the ignition back on. Clear the computer fault memory then switch off the ignition. Carry out the check again using the diagnostic tool and, if there are no faults, unlock the computer. When replacing the airbag module, do not forget to reconnect the earth on the new module. Destroy the driver's side curtain airbag module if it has been replaced (tool **Elé. 1287**).

GETtheMANUALS.org

DF070 **CONTINUED**	

CC.1 ***CC.0***	***NOTES***	None

Lock the computer using the diagnostic tool (VP006). Switch off the ignition and check that the ignition module of the driver's side curtain airbag is connected correctly (located behind the mounting bracket of the rear parcel shelf).
Disconnect the ignition module from the driver side curtain airbag and connect a dummy ignition module to the ignition module connector. Switch on the ignition and carry out a check using the diagnostic tool. Replace the driver side curtain airbag if the fault becomes stored (fault no longer declared present).
Remove the trim from the rear left-hand sill panel and check the wiring on the yellow **6-track** connector on the sill panel in the rear position (**tracks 1 and 2**). Repair if necessary. Fit the **6-track** test adapter to the airbag wiring (point **C1**). The CLIP or XRBAG tool must be used to correctly measure the insulation for the type of fault in adapter **cable A**. If the value obtained is incorrect, the wiring is faulty between the **6-track** connector and the curtain airbag (**C1/C3**). Replace the wiring if necessary.
Check the wiring again on the **6-track (tracks 1 and 2)** intermediate connector as well as the wiring of the **75-track connector (tracks 43 and 68)**. If the fault is still present, the wiring is faulty between the computer and the **6-track** intermediate connector **(C0/C1)**. Replace the wiring if necessary.

AFTER REPAIR	Reconnect the computer and the ignition module of the driver's side curtain airbag module then switch the ignition back on. Clear the computer fault memory then switch off the ignition. Carry out the check again using the diagnostic tool and, if there is no fault, unlock the computer. When replacing the airbag module, do not forget to reconnect the earth on the new module. Destroy the driver's side curtain airbag module if it has been replaced (tool **Elé. 1287**).

GETtheMANUALS.org

DF071 PRESENT	DRIVER'S FRONTAL AIRBAG CIRCUIT 2 CC : Short circuit CO : Open circuit CC.1 : Short circuit to + 12 V CC.0 : Short circuit to earth

NOTES	**Special notes:** Never carry out measuring operations on trigger lines using any tool other than CLIP or XRBAG. Use the **75-track B53 Elé. 1615** adapter for working on the computer connector (**cable N**) and the **10-track Elé. 1617** adapter for working on the rotary switch (**cable A**).

CO ***CC***	***NOTES***	None

Lock the computer using the diagnostic tool (VP006). Switch off the ignition and remove the driver's frontal airbag. Check that it is correctly connected.
Disconnect the driver's frontal airbag and attach 2 dummy ignition modules to the ignition module connectors. Switch on the ignition and carry out a check using the diagnostic tool. Replace the driver's frontal airbag if the fault becomes stored (fault no longer declared present).
With the ignition switched off, disconnect and reconnect the rotary switch connector under the steering wheel. Check the connections if the fault has become stored (fault no longer declared present).
Fit the **10-track** test adapter to the rotary switch (**point C2 tracks 9 and 10**). The CLIP or XRBAG tool must be used for checking resistance in adapter **cable A**. If the value obtained is incorrect, replace the rotary switch under the steering wheel.
Reconnect the rotary switch beneath the steering wheel, disconnect the computer and check the connector connections (**tracks 36 and 61**). Fit the **75-track adapter B53**. CLIP or XRBAG tools must be used for checking the resistance on **cable N** of the adapter. If the value obtained is incorrect, the wiring is faulty between the computer and the rotary switch connector (**C0/C2**). Replace the wiring if necessary.

AFTER REPAIR	Reconnect the computer and driver's frontal airbag ignition modules, then switch on the ignition. Clear the computer fault memory then switch off the ignition. Carry out the check again using the diagnostic tool and, if there is no fault, unlock the computer. Destroy the driver's frontal airbag if it has been replaced (tool **Elé. 1287**).

GETtheMANUALS.org

DF071 **CONTINUED**	

CC.1 ***CC.0***	***NOTES***	None

Lock the computer using the diagnostic tool (VP006). Switch off the ignition and remove the driver's frontal airbag. Check the condition of the firing lines.
Disconnect the driver's frontal airbag and attach 2 dummy ignition modules to the ignition module connectors. Fit the **10-track** test adapter to the rotary switch (**point C2 tracks 9 and 10**). The CLIP or XRBAG tool must be used to correctly measure the insulation for the type of fault in adapter **cable A**. If the value obtained is incorrect, replace the rotary switch beneath the steering wheel.
Reconnect the rotary switch beneath the steering wheel, disconnect the computer and check the connector connections (**tracks 36 and 61**). Fit the **75-track adapter B53**. The CLIP or XRBAG tools must be used for measuring the insulation appropriately for the type of fault on **cable N** on the adapter. If the value obtained is incorrect, the wiring is faulty between the computer and the rotary switch connector (**C0/C2**). Replace the wiring if necessary.

AFTER REPAIR	Reconnect the computer and frontal airbag ignition modules, then switch on the ignition. Clear the computer fault memory then switch off the ignition. Carry out the check again using the diagnostic tool and, if there is no fault, unlock the computer. Destroy the driver's frontal airbag if it has been replaced (tool **Elé. 1287**).

GETtheMANUALS.org

DF072 PRESENT	DRIVER'S FRONTAL AIRBAG CIRCUIT 1 CC : Short circuit CO : Open circuit CC.1 : Short circuit to + 12 V CC.0 : Short circuit to earth

NOTES	**Special notes:** Never carry out measuring operations on trigger lines using any tool other than CLIP or XRBAG. Use the **75-track B53 Elé. 1615** adapter for working on the computer connector (**cable M**) and the **10-track Elé. 1617** adapter for working on the rotary switch (**cable B**).

CO ***CC***	***NOTES***	None

Lock the computer using the diagnostic tool (VP006). Switch off the ignition and remove the driver's frontal airbag. Check that it is correctly connected.
Disconnect the driver's frontal airbag and attach 2 dummy ignition modules to the ignition module connectors. Switch on the ignition and carry out a check using the diagnostic tool. Replace the driver's frontal airbag if the fault becomes stored (fault no longer declared present).
With the ignition switched off, disconnect and reconnect the rotary switch connector under the steering wheel. Check the connections if the fault has become stored (fault no longer declared present).
Fit the **10-track** test adapter to the rotary switch (**point C2 tracks 6 and 7**). The CLIP or XRBAG must be used to measure the resistance in adapter **cable B**. If the value obtained is incorrect, replace the rotary switch under the steering wheel.
Reconnect the rotary switch under the steering wheel, disconnect the computer and check the connector connections (**tracks 35 and 60**). Fit the **75-track B53** adapter. CLIP or XRBAG tools must be used for measuring the resistance on **cable M** of the adapter. If the value obtained is incorrect, the wiring is faulty between the computer and the rotary switch connector (**C0/C2**). Replace the wiring if necessary.

AFTER REPAIR	Reconnect the computer and frontal airbag ignition modules, then switch on the ignition. Clear the computer fault memory then switch off the ignition. Carry out the check again using the diagnostic tool and, if there is no fault, unlock the computer. Destroy the driver's frontal airbag if it has been replaced (tool **Elé. 1287**).

GETtheMANUALS.org

DF072 **CONTINUED**	

CC.1 ***CC.0***	***NOTES***	None

Lock the computer using the diagnostic tool (VP006). Switch off the ignition and remove the driver's frontal airbag. Check the condition of the firing lines.
Disconnect the driver's frontal airbag and attach 2 dummy ignition modules to the ignition module connectors. Fit the **10-track** test adapter to the rotary switch (**point C2 tracks 6 and 7**). The CLIP or XRBAG tool must be used to correctly measure the insulation for the type of fault in the adapter **cable B**. If the value obtained is incorrect, replace the rotary switch under the steering wheel.
Reconnect the rotary switch under the steering wheel, disconnect the computer and check the connector connections (**tracks 35 and 60**). Fit the **75-track adapter B53**. The CLIP or XRBAG tools must be used for measuring the insulation appropriately for the type of fault on **cable M** on the adapter. If the value obtained is incorrect, the wiring is faulty between the computer and the rotary switch connector (**C0/C2**). Replace the wiring if necessary.

AFTER REPAIR	Reconnect the computer and frontal airbag ignition modules, then switch on the ignition. Clear the computer fault memory then switch off the ignition. Carry out the check again using the diagnostic tool and, if there is no fault, unlock the computer. Destroy the driver's frontal airbag if it has been replaced (tool **Elé. 1287**).

GETtheMANUALS.org

DF073 PRESENT	PASSENGER SIDE BUCKLE PRETENSIONER CIRCUIT CC : Short circuit CO : Open circuit CC.1 : Short circuit to + 12 V CC.0 : Short circuit to earth

NOTES	**Priorities when dealing with a number of faults:** If faults **DF073 and DF068** are present, begin the fault finding by checking the **28-track** under-seat connector.
	Special notes: The buckle pretensioner of the front passenger's seat is wired in series with the rear pyrotechnic seat belt retractor on the passenger's side. Never carry out measuring on the trigger lines with any tool other than CLIP or XRBAG. Use the **75-track B53 Elé. 1615** adapter for working on the computer connector (**cable E or F**) and the **28-track Elé. 1616** adapter for working on the seat (**cable A**).

CO ***CC***	***NOTES***	None

Lock the computer using the diagnostic tool (VP006).
Switch off the ignition and check that the ignition module of the passenger's seat buckle pretensioner is correctly connected.
Disconnect the ignition module of the pretensioner and connect a dummy ignition module to the ignition module connector.
Switch on the ignition and carry out a check using the diagnostic tool.
Replace the passenger front seat buckle pretensioner if the fault becomes stored (fault no longer declared present).

Switch off the ignition and check that the ignition module of the rear seat belt inertia reel, passenger's side is correctly connected.
Disconnect the ignition module of the inertia reel and connect a dummy ignition module to the ignition module connector.
Switch on the ignition and carry out a check using the diagnostic tool.
Replace the rear seat belt retractor on the passenger side, if the fault becomes stored (fault no longer declared present).

Disconnect the computer and check the connections of the connector (**tracks 4, 5, 27 and 52**).
Fit the **75-track B53 adapter**.
CLIP or XRBAG tools must be used for checking the resistance on **cable F** of the adapter.
If the value obtained is incorrect, the wiring is faulty between the computer and the rear seat belt retractor on the passenger side (**C0/C3**). Replace the wiring if necessary.
See next page.

AFTER REPAIR	Reconnect the computer, the pretensioner and the inertia reel then switch on the ignition again. Clear the computer fault memory then switch off the ignition. Carry out the check again using the diagnostic tool and, if there is no fault, unlock the computer. Destroy the pretensioner or the inertia reel if it has been replaced (tool **Elé. 1287**).

GETtheMANUALS.org

DF073 **CONTINUED 1**	

The CLIP or XRBAG must be used to measure the resistance in adapter **cable E**.
If the value obtained is incorrect, the wiring is faulty between the computer and the passenger seat buckle pretensioner (**C0/C3**).

Remove the passenger seat and check the wiring on the **28-track** connector under the seat (**tracks 8 and 22**).
Repair if necessary. Fit the **28-track** test adapter to the seat (**point C1**).
The CLIP or XRBAG tool must be used for checking resistance in adapter **cable A**.
Is the value obtained correct?

NO	Check the seat-side seat connector connections again (**tracks 8 and 22**). If the fault is still present, the wiring is faulty between the **28-track** seat connector and the passenger seat buckle pretensioner (**C1/C3**). Replace the wiring if necessary.
YES	Check the wiring again on the seat connector (**tracks 8 and 22**) on the passenger compartment wiring side and the wiring of the **75 track connector (tracks 4 and 27**). If the fault is still present, the wiring is faulty between the computer and the front passenger seat (**C0/C1**). Replace the wiring if necessary.

AFTER REPAIR	Reconnect the computer, the pretensioner and the inertia reel then switch on the ignition again. Clear the computer fault memory then switch off the ignition. Carry out the check again using the diagnostic tool and, if there is no fault, unlock the computer. Destroy the pretensioner or the inertia reel if it has been replaced (tool **Elé. 1287**).

GETtheMANUALS.org

DF073 **CONTINUED 2**	

CC.1 ***CC.0***	***NOTES***	None

Lock the computer using the diagnostic tool (VP006).
Disconnect the computer and check the connections of the connector (**tracks 4, 5, 27 and 52**).
Fit the **75-track B53 adapter**.
The CLIP or XRBAG tool must be used to correctly measure the insulation for the type of fault in the adapter **cable F**.
If the value obtained is incorrect, the wiring is faulty between the computer and the rear pyrotechnic seat belt retractor on the passenger side (**C0/C3**). Replace the wiring if necessary.

The CLIP or XRBAG tool must be used to correctly measure the insulation for the type of fault in adapter **cable E**.
If the value obtained is incorrect, remove the passenger seat and check the wiring on the **28-track** connector under the seat (**tracks 8 and 22**). Repair if necessary. Fit the **28-track** test adapter to the seat (**point C1**).
The CLIP or XRBAG tool must be used to correctly measure the insulation for the type of fault in adapter **cable A**.
Is the value obtained correct?

NO	Check the passenger-side seat connector connections again (**tracks 8 and 22**). If the fault is still present, the wiring is faulty between the **28-track** seat connector and the passenger seat buckle pretensioner (**C1/C3**). Replace the wiring if necessary.
YES	Check the wiring again on the seat connector (**tracks 8 and 22**) on the passenger compartment wiring harness side and the wiring of the **75-track connector (tracks 4 and 27**). If the fault is still present, the wiring is faulty between the computer and the front passenger seat (**C0/C1**). Replace the wiring if necessary.

AFTER REPAIR	Reconnect the computer, the pretensioner and the inertia reel then switch on the ignition again. Clear the computer fault memory then switch off the ignition. Carry out the check again using the diagnostic tool and, if there is no fault, unlock the computer. Destroy the pretensioner or the inertia reel if it has been replaced (tool **Elé. 1287**).

GETtheMANUALS.org

DF074 PRESENT	PASSENGER'S FRONTAL AIRBAG CIRCUIT 2 CC : Short circuit CO : Open circuit CC.1 : Short circuit to + 12 V CC.0 : Short circuit to earth

NOTES	**Special notes:** Never carry out measuring operations on trigger lines using any tool other than CLIP or XRBAG. Use the **75-track B53 Elé. 1615** adapter for working on the computer connector (**cable P**) and the **6 track Elé. 1617 (cable B)** adapter.

CO ***CC***	***NOTES***	None

Lock the computer using the diagnostic tool (VP006).
Switch off the ignition and check the connection and condition of the **6-track connector (tracks 5 and 6 point)** located under the right-hand tweeter speaker on the dashboard for the ESPACE IV and behind the glove box for the LAGUNA II and VELSATIS.

Fit the **6 track Elé. 1617** test adapter (point **C2 tracks 5 and 6**).
The CLIP or XRBAG must be used to measure the resistance in adapter **cable B**.
If the value obtained is incorrect, replace the passenger airbag along with its harness (**C2/C4**).

If the value is correct:
Reconnect the **6 track** connector, disconnect the computer and check the connections on the connector (**tracks 38 and 63**).
Fit the **75-track B53** test adapter.
CLIP or XRBAG tools must be used for measuring the resistance on **cable P** of the adapter.
If the value obtained is incorrect, the wiring is faulty between the computer and the **6-track** connector (C0/C2).
Replace the wiring if necessary.

AFTER REPAIR	Reconnect the computer and the **6-track** connector of the passenger airbag module then switch on the ignition. Clear the computer fault memory then switch off the ignition. Carry out the check again using the diagnostic tool and, if there is no fault, unlock the computer. When replacing the airbag module, do not forget to reconnect the earth on the new module. Destroy the passenger's frontal airbag module if it has been replaced (tool **Elé. 1287**).

GETtheMANUALS.org

DF074 **CONTINUED**	

CC.1 ***CC.0***	***NOTES***	None

Lock the computer using the diagnostic tool (VP006).
Switch off the ignition and check the connection and condition of the **6-track connector (tracks 5 and 6)** located under the right-hand tweeter speaker on the dashboard for the ESPACE IV and behind the glove box for the LAGUNA II and VELSATIS.

Fit the **6-track Elé. 1617** test adapter (point **C2 tracks 5 and 6**).
The CLIP or XRBAG tool must be used to correctly measure the insulation for the type of fault in the adapter **cable marked B**.
If the value obtained is incorrect, replace the passenger airbag along with its harness (**C2/C4**).

If the value is correct:
Reconnect the **6 track** connector, disconnect the computer and check the connections on the connector (**tracks 38 and 63**).
Fit the **75-track B53** test adapter.
The CLIP or XRBAG tools must be used for measuring the insulation appropriately for the type of fault on **cable P** on the adapter.
If the value obtained is incorrect, the wiring is faulty between the computer and the connections of the **6-track** connector (C0/C2).
Replace the wiring if necessary.

AFTER REPAIR	Reconnect the computer and the **6-track** connector of the passenger airbag module then switch on the ignition. Clear the computer fault memory then switch off the ignition. Carry out the check again using the diagnostic tool and, if there is no fault, unlock the computer. When replacing the airbag module, do not forget to reconnect the earth on the new module. Destroy the passenger's frontal airbag module if it has been replaced (tool **Elé. 1287**).

GETtheMANUALS.org

DF075 PRESENT	PASSENGER'S FRONTAL AIRBAG CIRCUIT 1 CC : Short circuit CO : Open circuit CC.1 : Short circuit to + 12 V CC.0 : Short circuit to earth

NOTES	**Special notes:** Never carry out measuring operations on trigger lines using any tool other than CLIP or XRBAG. Use the **75 track B53 Elé. 1615** adapter for working on the computer connector (**cable O**) and the **6-track Elé. 1617 (cable A)** adapter.

CO ***CC***	***NOTES***	None

Lock the computer using the diagnostic tool (VP006). Switch off the ignition and check the connection and condition of the **6-track (tracks 1 and 2)** connector located under the dashboard right-hand tweeter speaker.
Fit the **6-track Elé. 1617** test adapter (point **C2 tracks 1 and 2**). The CLIP or XRBAG tool must be used for checking resistance in adapter **cable A**. If the value obtained is incorrect, replace the passenger airbag along with its harness (**C2/C4**).
If the value is correct: Reconnect the **6 track** connector, disconnect the computer and check the connections on the connector (**tracks 37 and 62**). Fit the **75-track B53** test adapter. CLIP or XRBAG tools must be used for measuring the resistance on **cable O** of the adapter. If the value obtained is incorrect, the wiring is faulty between the computer and the **6 track connector (C0/C2)**. Replace the wiring if necessary.

AFTER REPAIR	Reconnect the computer and the **6-track** connector of the passenger airbag module then switch on the ignition. Clear the computer fault memory then switch off the ignition. Carry out the check again using the diagnostic tool and, if there is no fault, unlock the computer. When replacing the airbag module, do not forget to reconnect the earth on the new module. Destroy the passenger's frontal airbag module if it has been replaced (tool **Elé. 1287**).

GETtheMANUALS.org

DF075 **CONTINUED**	

CC.1 ***CC.0***	***NOTES***	None

Lock the computer using the diagnostic tool (VP006). Switch off the ignition and check the connection and condition of the **6-track (tracks 1 and 2)** connector located under the dashboard right-hand tweeter speaker.
Fit the **6-track Elé. 1617** test adapter (point C2 **tracks 1 and 2**). The CLIP or XRBAG tool must be used to correctly measure the insulation for the type of fault in adapter **cable A**. If the value obtained is incorrect, replace the passenger airbag along with its harness (**C2, C4**).
If the value is correct: Reconnect the **6 track** connector, disconnect the computer and check the connections on the connector (**tracks 32 and 67**). Fit the **75-track B53** test **adapter**. The CLIP or XRBAG tools must be used for measuring the insulation appropriately for the type of fault on **cable O** on the adapter. If the value obtained is incorrect, the wiring is faulty between the computer and the connections of the **6-track** connector (C0/C2). Replace the wiring if necessary.

AFTER REPAIR	Reconnect the computer and the **6-track** connector of the passenger airbag module then switch on the ignition. Clear the computer fault memory then switch off the ignition. Carry out the check again using the diagnostic tool and, if there is no fault, unlock the computer. When replacing the airbag module, do not forget to reconnect the earth on the new module. Destroy the passenger's frontal airbag module if it has been replaced (tool **Elé. 1287**).

GETtheMANUALS.org

DF076 PRESENT	DRIVER'S SIDE BUCKLE PRETENSIONER CIRCUIT CC : Short circuit CO : Open circuit CC.1 : Short circuit to + 12 V CC.0 : Short circuit to earth

NOTES	**Priorities when dealing with a number of faults:** If fault **DF076** is present with at least one of **DF065, DF077, DF080**, begin the fault finding by checking the **28-track** under-seat connector.
	Special notes: The buckle pretensioner of the driver's seat is wired in series with the rear pyrotechnic seat belt retractor on the driver's side. Never carry out measuring on the trigger lines with any tool other than CLIP or XRBAG. Use the **75-track B53 Elé. 1615** adapter for working on the computer connector (**cable B or C**) and the **28-track Elé. 1616** adapter for working on the seat (**cable A**).

CO ***CC***	***NOTES***	None

Lock the computer using the diagnostic tool (VP006).
Switch off the ignition and check that the ignition module of the driver's seat buckle pretensioner is correctly connected.
Disconnect the ignition module of the pretensioner and connect a dummy ignition module to the ignition module connector.
Switch on the ignition and carry out a check using the diagnostic tool.
Replace the driver's seat buckle pretensioner if the fault becomes stored (fault no longer declared present).

Switch off the ignition and check that the ignition module of the rear pyrotechnic seat belt retractor, driver's side is correctly connected.
Disconnect the ignition module of the inertia reel and connect a dummy ignition module to the ignition module connector.
Switch on the ignition and carry out a check using the diagnostic tool.
Replace the rear pyrotechnic seat belt retractor, driver's side, if the fault becomes stored (fault no longer declared present).

Reconnect the pretensioner and the inertia reel.
Disconnect the computer and check the connections of the connector (**tracks 2, 3, 26 and 51**).
Fit the **75-track adapter B53**.
The CLIP or XRBAG tool must be used to measure the resistance in adapter **cable C**.
If the value obtained is incorrect, the wiring is faulty between the computer and the rear pyrotechnic seat belt retractor, driver's side (**C0/C3**). Replace the wiring if necessary.
See next page.

AFTER REPAIR	Reconnect the computer, the pretensioner and the inertia reel then switch on the ignition again. Clear the computer fault memory then switch off the ignition. Carry out the check again using the diagnostic tool and, if there is no fault, unlock the computer. Destroy the pretensioner or the inertia reel if it has been replaced (tool **Elé. 1287**).

GETtheMANUALS.org

DF076 **CONTINUED 1**	

The CLIP or XRBAG must be used to measure the resistance in adapter **cable B**.
If the value obtained is incorrect, the wiring is faulty between the computer and the driver's seat buckle pretensioner (**C0/C3**).

Remove the driver's seat and check the wiring on the **28-track** connector under the seat (**tracks 8 and 22**). Repair if necessary. Fit the **28-track** test adapter to the seat (**point C1**).
The CLIP or XRBAG tool must be used for checking resistance in adapter **cable A**.
Is the value obtained correct?

NO	Check the driver's side seat connector connections again (**tracks 8 and 22**). If the fault is still present, the wiring is faulty between the **28-track** seat connector and the driver's seat buckle pretensioner (**C1/C3**). Replace the wiring if necessary.
YES	Check the wiring again on the seat connector (**tracks 8 and 22**) on the passenger compartment wiring harness side and the wiring of the **75 track connector (tracks 2 and 26)**.
	If the fault is still present, the wiring is faulty between the computer and the driver's seat (**C0/C1**). Replace the wiring if necessary.

AFTER REPAIR	Reconnect the computer, the pretensioner and the inertia reel then switch on the ignition again. Clear the computer fault memory then switch off the ignition. Carry out the check again using the diagnostic tool and, if there is no fault, unlock the computer. Destroy the pretensioner or the inertia reel if it has been replaced (tool **Elé. 1287**).

GETtheMANUALS.org

DF076 **CONTINUED 2**	

CC.1 ***CC.0***	***NOTES***	None

Lock the computer using the diagnostic tool (VP006).
Disconnect the computer and check the connections of the connector (**tracks 2, 3, 26 and 51**).
Fit the **75-track adapter B53**.
CLIP or XRBAG tools must be used for the insulation measurement appropriate to the type of fault, on **cable C** of the adapter.
If the value obtained is incorrect, the wiring is faulty between the computer and the rear pyrotechnic seat belt retractor, driver's side (**C0/C3**). Replace the wiring if necessary.

The CLIP or XRBAG tool must be used to correctly measure the insulation for the type of fault in the adapter **cable marked B**.
If the value obtained is incorrect, remove the driver's seat and check the wiring on the **28-track** connector under the seat (**tracks 8 and 22**). Repair if necessary. Fit the **28-track** test adapter to the seat (**point C1**).
The CLIP or XRBAG tool must be used to correctly measure the insulation for the type of fault in adapter **cable A**.
Is the value obtained correct?

NO	Check the driver's side seat connector connections again (**tracks 8 and 22**). If the fault is still present, the wiring is faulty between the **28-track** seat connector and the driver's seat buckle pretensioner (**C1/C3**). Replace the wiring if necessary.
YES	Check the wiring again on the seat connector (**tracks 8 and 22**) on the passenger compartment wiring harness side and the wiring of the **75 track connector (tracks 2 and 26)**.
	If the fault is still present, the wiring is faulty between the computer and the driver's seat (**C0/C1**). Replace the wiring if necessary.

AFTER REPAIR	Reconnect the computer, the pretensioner and the inertia reel then switch on the ignition again. Clear the computer fault memory then switch off the ignition. Carry out the check again using the diagnostic tool and, if there is no fault, unlock the computer. Destroy the pretensioner or the inertia reel if it has been replaced (tool **Elé. 1287**).

GETtheMANUALS.org

DF077 **PRESENT**	DRIVER'S FRONT CHEST SIDE AIRBAG CIRCUIT CC : Short circuit CO : Open circuit CC.1 : Short circuit to + 12 V CC.0 : Short circuit to earth

NOTES	**Priorities when dealing with a number of faults:** If fault **DF077** is present with at least one of **DF065, DF076, DF080**, begin the fault finding by checking the **28-track** under-seat connector.
	Special notes: Never carry out measuring operations on trigger lines using any tool other than CLIP or XRBAG. Use the **75 track B53 Elé. 1615** adapter for working on the computer connector (**cable Q**) and the **28 track Elé. 1616** adapter for working on the seat (**cable C**).

LAGUNA II

CO ***CC***	***NOTES***	None

Lock the computer using the diagnostic tool (VP006), disconnect the computer connector and fit the **75-track B53 adapter**. The CLIP or XRBAG tools must be used for measuring resistance on the **cable marked Q** on the adapter. If the value obtained is correct, check the connections of the **75-track (tracks 41 and 66)** connector.

Remove the driver's seat and check the wiring on the **28-track** connector under the seat.
Repair if necessary.
Fit the **28-track** test adapter to the seat (**point C1**).
The CLIP or XRBAG tool must be used to measure the resistance in adapter **cable C**.
Is the value obtained correct?

AFTER REPAIR	Reconnect the computer and the ignition module of the driver's front side chest airbag module then switch on the ignition. Clear the computer fault memory then switch off the ignition. Carry out the check again using the diagnostic tool and, if there is no fault, unlock the computer. When replacing the airbag module, do not forget to reconnect the earth on the new module. Destroy the chest side airbag module if it has been replaced (tool **Elé. 1287**).

GETtheMANUALS.org

DF077 **CONTINUED 1**	

LAGUNA II

NO	Check the seat connector connections (**tracks 14 and 28**). Remove the trim from the driver's seat and check that the side airbag ignition module is correctly connected.
	Disconnect the side airbag ignition module, connect a dummy ignition module to the ignition module connector and re-measure the resistance on **cable C** of the adapter. – If the value obtained is correct, replace the driver's front chest side airbag module. – If the value obtained is still not correct, replace the wiring between **points C1 and C3** (seat wiring).
YES	Check the seat connector connections (**tracks 14 and 28**) again, as well as those of the **75-track (tracks 41 and 66)** connector.
	If the fault is still present, the wiring is faulty between the computer and the driver's seat (**C0/C1**). Replace the wiring if necessary.

AFTER REPAIR	Reconnect the computer and the ignition module of the driver's front side chest airbag module then switch on the ignition. Clear the computer fault memory then switch off the ignition. Carry out the check again using the diagnostic tool and, if there is no fault, unlock the computer. When replacing the airbag module, do not forget to reconnect the earth on the new module. Destroy the chest side airbag module if it has been replaced (tool **Elé. 1287**).

GETtheMANUALS.org

DF077 **CONTINUED 2**	

LAGUNA II

CC.1 ***CC.0***	***NOTES***	None

Lock the computer using the diagnostic tool (VP006), disconnect the computer connector and fit the **75-track B53** adapter. The CLIP or XRBAG tools must be used for measuring the insulation appropriately for the type of fault on the **cable marked Q** on the adapter.
If the value obtained is correct, check the connections of the **75-track (tracks 41 and 66)** connector.

Remove the driver's seat and check the wiring on the **28-track** connector under the seat.
Repair if necessary.
Fit the **28-track** test adapter to the seat (**point C1**).
The CLIP or XRBAG tool must be used to correctly measure the insulation for the type of fault in adapter **cable C**.
Is the value obtained correct?

NO

Check the seat connector connections (**tracks 14 and 28**).
Remove the trim from the driver's seat and check that the side airbag ignition module is correctly connected.

Disconnect the side airbag ignition module, connect a dummy ignition module to the ignition module connector and again measure the proper insulation for the type of fault, in **cable C** of the adapter.
– If the value obtained is correct, replace the driver's front chest side airbag module.
– If the value obtained is still not correct, replace the wiring between **points C1 and C3** (seat wiring).

YES

Check the seat connector connections (**tracks 14 and 28**) again, as well as those of the **75-track (tracks 41 and 66)** connector.

If the fault is still present, the wiring is faulty between the computer and the driver's seat (**C0/C1**). Replace the wiring if necessary.

AFTER REPAIR

Reconnect the computer and the ignition module of the driver's front side chest airbag module then switch on the ignition. Clear the computer fault memory then switch off the ignition.
Carry out the check again using the diagnostic tool and, if there is no fault, unlock the computer. When replacing the airbag module, do not forget to reconnect the earth on the new module. Destroy the driver's chest side airbag module if it has been replaced (tool **Elé. 1287**).

GETtheMANUALS.org

DF077 **PRESENT**	DRIVER'S FRONT CHEST SIDE AIRBAG CIRCUIT CC : Short circuit CO : Open circuit CC.1 : Short circuit to + 12 V CC.0 : Short circuit to earth

NOTES	**Priorities when dealing with a number of faults:** If fault **DF077** is present with at least one of **DF065, DF076, DF080**, begin the fault finding by checking the **28-track** under-seat connector.
	Special notes: Never carry out measuring operations on trigger lines using any tool other than CLIP or XRBAG. Use the **75-track B53 Elé. 1615** adapter for operating on the computer connector (**cable Q**) and the **28-track Elé. 1616** adapter for operating on the seat (**cable B**).

VELSATIS

Lock the computer using the diagnostic tool (VP006), disconnect the computer connector and fit the **75-track B53** test **adapter**. The CLIP or XRBAG tools must be used for measuring resistance on the **cable marked Q** on the adapter. If the value obtained is correct, check the connections of the **75-track (tracks 41 and 66)** connector.
Remove the driver's seat and check the wiring on the **28-track** connector under the seat. Repair if necessary. Fit the **28-track** test adapter to the seat (**point C1**). The CLIP or XRBAG must be used to measure the resistance in adapter **cable B**. **Is the value obtained correct?**

AFTER REPAIR	Reconnect the computer and the ignition module of the driver's front side chest airbag module then switch on the ignition. Clear the computer fault memory then switch off the ignition. Carry out the check again using the diagnostic tool and, if there is no fault, unlock the computer. When replacing the airbag module, do not forget to reconnect the earth on the new module. Destroy the driver's chest side airbag module if it has been replaced (tool **Elé. 1287**).

GETtheMANUALS.org

DF077 **CONTINUED 1**	

VELSATIS

NO	Check the seat connector connections (**tracks 7 and 21**). Remove the trim from the driver's seat and check that the side airbag ignition module is correctly connected.
	Disconnect the passenger airbag ignition module, connect a dummy ignition module to the ignition module connector then measure the resistance on **cable B** of the adapter again. – If the value obtained is correct, replace the driver's front chest side airbag module. – If the value obtained is still not correct, replace the wiring between **points C1 and C3 (seat wiring)**.
YES	Check the seat connector connections (**tracks 7 and 21**) again, as well as those of the **75-track connector (tracks 41 and 66)**.
	If the fault is still present, the wiring is faulty between the computer and the driver's seat (**C0/C1**). Replace the wiring if necessary.

AFTER REPAIR	Reconnect the computer and the ignition module of the driver's front side chest airbag module then switch on the ignition. Clear the computer fault memory then switch off the ignition. Carry out the check again using the diagnostic tool and, if there is no fault, unlock the computer. When replacing the airbag module, do not forget to reconnect the earth on the new module. Destroy the driver's chest side airbag module if it has been replaced (tool **Elé. 1287**).

GETtheMANUALS.org

DF077 **CONTINUED 2**	

VELSATIS

CC.1 ***CC.0***	***NOTES***	None

Lock the computer using the diagnostic tool (VP006), disconnect the computer connector and fit the **75-track B53** test **adapter**. The CLIP or XRBAG tools must be used for measuring the insulation appropriately for the type of fault on the **cable marked Q** on the adapter.
If the value obtained is correct, check the connections of the **75-track (tracks 41 and 66)** connector.

Remove the driver's seat and check the wiring on the **28-track** connector under the seat.
Repair if necessary.
Fit the **28-track** test adapter to the seat (**point C1**).
The CLIP or XRBAG tool must be used to correctly measure the insulation for the type of fault in the adapter **cable marked B**.
Is the value obtained correct?

NO

Check the seat connector connections (**tracks 7 and 21**).
Remove the trim from the driver's seat and check that the side airbag ignition module is correctly connected.

Disconnect the side airbag ignition module, connect a dummy ignition module to the ignition module connector and measure the proper insulation for the type of fault, in **cable B** of the adapter again.
– If the value obtained is correct, replace the driver's front chest side airbag module.
– If the value obtained is still not correct, replace the wiring between **points C1 and C3** (seat wiring).

NO

Check the seat connector connections (**tracks 7 and 21**) again, as well as those of the **75-track connector (tracks 41 and 66)**.

If the fault is still present, the wiring is faulty between the computer and the driver's seat (**C0/C1**).
Replace the wiring if necessary.

AFTER REPAIR

Reconnect the computer and the ignition module of the driver's front side chest airbag module then switch on the ignition. Clear the computer fault memory then switch off the ignition.
Carry out the check again using the diagnostic tool and, if there is no fault, unlock the computer. When replacing the airbag module, do not forget to reconnect the earth on the new module. Destroy the driver's chest side airbag module if it has been replaced (tool **Elé. 1287**).

GETtheMANUALS.org

DF077 PRESENT	DRIVER'S FRONT CHEST SIDE AIRBAG CIRCUIT CC : Short circuit CO : Open circuit CC.1 : Short-circuit to + 12 volts CC.0 : Short circuit to earth

NOTES	**Priorities when dealing with a number of faults:** If fault **DF077** is present with at least one of **DF065, DF080, DF210**, begin the fault finding by checking the **28-track** under-seat connector.
	Special notes: Never carry out measuring operations on trigger lines using any tool other than CLIP or XRBAG. Use the **75-track B53 Elé. 1615** adapter for operating on the computer connector (**cable Q**) and the **28-track Elé. 1616** adapter for operating on the seat (**cable B**).

ESPACE IV

CO ***CC***	***NOTES***	None

Lock the computer using the diagnostic tool (VP006), disconnect the computer connector and fit the **75-track B53** test **adapter**. The CLIP or XRBAG tools must be used for measuring resistance on the **cable marked Q** on the adapter.
If the value obtained is correct, check the connections of the **75-track (tracks 41 and 66)** connector.

Remove the driver's seat and check the wiring on the **28-track** connector under the seat.
Repair if necessary.
Fit the **28-track** test adapter to the seat (**point C1**).
The CLIP or XRBAG tool must be used to measure the resistance in adapter **cable B**.
Is the value obtained correct?

AFTER REPAIR	Reconnect the computer and the ignition module of the driver's front side chest airbag module then switch on the ignition. Clear the computer fault memory then switch off the ignition. Carry out the check again using the diagnostic tool and, if there is no fault, unlock the computer. When replacing the airbag module, do not forget to reconnect the earth on the new module. Destroy the driver's chest side airbag module if it has been replaced (tool **Elé. 1287**).

GETtheMANUALS.org

DF077 **CONTINUED 1**	

ESPACE IV

NO	Check the seat connector connections (**tracks 7 and 21**). Remove the trim from the driver's seat and check that the side airbag ignition module is correctly connected.
	Disconnect the passenger airbag ignition module, connect a dummy ignition module to the ignition module connector then measure the resistance on **cable B** of the adapter again. – If the value obtained is correct, replace the driver's front chest side airbag module. – If the value obtained is still not correct, replace the wiring between **points C1 and C3** (seat wiring).
YES	Check the seat connector connections (**tracks 7 and 21**) again, as well as those of the **75-track connector (tracks 41 and 66)**.
	If the fault is still present, the wiring is faulty between the computer and the driver's seat (**C0/C1**). Replace the wiring if necessary.

AFTER REPAIR	Reconnect the computer and the ignition module of the driver's front side chest airbag module then switch on the ignition. Clear the computer fault memory then switch off the ignition. Carry out the check again using the diagnostic tool and, if there is no fault, unlock the computer. When replacing the airbag module, do not forget to reconnect the earth on the new module. Destroy the driver's chest side airbag module if it has been replaced (tool **Elé. 1287**).

GETtheMANUALS.org

DF077 **CONTINUED 2**	

ESPACE IV

CC.1 ***CC.0***	***NOTES***	None

Lock the computer using the diagnostic tool (VP006), disconnect the computer connector and fit the **75-track B53** test **adapter**. The CLIP or XRBAG tools must be used for measuring the insulation appropriately for the type of fault on the **cable marked Q** on the adapter.
If the value obtained is correct, check the connections of the **75-track (tracks 41 and 66)** connector.

Remove the driver's seat and check the wiring on the **28-track** connector under the seat.
Repair if necessary.
Fit the **28-track** test adapter to the seat (**point C1**).
The CLIP or XRBAG tool must be used to correctly measure the insulation for the type of fault in the adapter **cable B**.
Is the value obtained correct?

NO

Check the seat connector connections (**tracks 7 and 21**).
Remove the trim from the driver's seat and check that the side airbag ignition module is correctly connected.

Disconnect the side airbag ignition module, connect a dummy ignition module to the ignition module connector and measure the proper insulation for the type of fault, in **cable B** of the adapter again.
– If the value obtained is correct, replace the driver's front chest side airbag module.
– If the value obtained is still not correct, replace the wiring between **points C1 and C3 (seat wiring)**.

YES

Check the seat connector connections (**tracks 7 and 21**) again, as well as those of the **75-track connector (tracks 41 and 66)**.

If the fault is still present, the wiring is faulty between the computer and the driver's seat (**C0/C1**).
Replace the wiring if necessary.

AFTER REPAIR

Reconnect the computer and the ignition module of the driver's front side chest airbag module then switch on the ignition. Clear the computer fault memory then switch off the ignition.
Carry out the check again using the diagnostic tool and, if there is no fault, unlock the computer. When replacing the airbag module, do not forget to reconnect the earth on the new module. Destroy the driver's chest side airbag module if it has been replaced (tool **Elé. 1287**).

GETtheMANUALS.org

DF080 **PRESENT**	DRIVER'S LAP BELT PRETENSIONER CIRCUIT CC : Short circuit CO : Open circuit CC.1 : Short circuit to + 12 V CC.0 : Short circuit to earth

NOTES	**Priorities when dealing with a number of faults:** If fault **DF080** is present with at least one of **DF065, DF076, DF077**, begin the fault finding by checking the **28-track** under-seat connector.
	Special notes: Never carry out measuring operations on trigger lines using any tool other than CLIP or XRBAG. Use the **75-track B53 Elé. 1615** adapter for working on the computer connector (**cable K**) and the **28-track Elé. 1616** adapter for working on the seat (**cable B**).

LAGUNA II

CO ***CC***	***NOTES***	None

Lock the computer using the diagnostic tool (VP006). Switch off the ignition and check that the ignition module of the driver's lap belt pretensioner is correctly connected.
Disconnect the ignition module of the driver's lap belt pretensioner and connect a dummy ignition module to the ignition module connector. Switch on the ignition and carry out a check using the diagnostic tool. Replace the driver's lap belt pretensioner if the fault is stored (the fault is no longer declared present).
Disconnect the computer connector and fit the **75-track adapter B53**. The Clip or XRBAG tools MUST be used for checking resistance on the **wire marked K** on the adapter. If the value obtained is correct, check the connections of the **75-track (tracks 28 and 53)** connector.
Remove the driver's seat and check the wiring on the **28-track** connector under the seat (**tracks 7 and 21**). Repair if necessary. Fit the **28-track** test adapter to the seat (**point C1**). The CLIP or XRBAG must be used to measure the resistance in adapter **cable B**. If the value obtained is incorrect, the wiring is faulty between the **28-track** connector and the driver's lap belt pretensioner (**C1 and C3**). Replace the wiring if necessary. See next page.

AFTER REPAIR	Reconnect the computer and the pretensioner igniter, then switch on the ignition again. Clear the computer fault memory then switch off the ignition. Carry out the check again using the diagnostic tool and, if there is no fault, unlock the computer. Destroy the pretensioner if it has been replaced (tool **Elé. 1287**).

GETtheMANUALS.org

DF080 **CONTINUED**	

LAGUNA II

If the fault persists, the wiring is faulty between the **75-track** computer connector and the driver's seat (**C0/C1**).
Replace the wiring if necessary.

CC.1 ***CC.0***	***NOTES***	None

Lock the computer using the diagnostic tool (VP006).
Disconnect the computer connector and fit the **75-track adapter B53**.
The CLIP or XRBAG tools must be used for measuring the insulation appropriate to the type of fault on the **cable marked K** on the adapter.
If the value obtained is correct, check the connections of the **75-track (tracks 28 and 53)** connector.

If the value is not correct, remove the driver's seat and check the wiring on the **28 track** connector under the seat (**tracks 7 and 21**).
Repair if necessary.
Fit the **28-track** test adapter to the seat (**point C1**).
The CLIP or XRBAG tool must be used to correctly measure the insulation for the type of fault in the adapter **cable marked B**.
If the value obtained is incorrect, the wiring is faulty between the **28-track** connector and the driver's lap belt pretensioner (**C1 and C3**). Replace the wiring if necessary.
If the value obtained is correct, the wiring is faulty between the **75-track** computer connector and the driver's seat (**C0/C1**).
Replace the wiring if necessary.

AFTER REPAIR	Reconnect the computer and the pretensioner igniter, then switch on the ignition again. Clear the computer fault memory then switch off the ignition. Carry out the check again using the diagnostic tool and, if there is no fault, unlock the computer. Destroy the pretensioner if it has been replaced (tool **Elé. 1287**).

GETtheMANUALS.org

DF080 **PRESENT**	DRIVER'S LAP BELT PRETENSIONER CIRCUIT CC : Short circuit CO : Open circuit CC.1 : Short circuit to + 12 V CC.0 : Short circuit to earth

NOTES	**Priorities when dealing with a number of faults:** If fault **DF080** is present with at least one of **DF065, DF076, DF077**, begin the fault finding by checking the **28-track** under-seat connector.
	Special notes: Never carry out measuring operations on trigger lines using any tool other than CLIP or XRBAG. Use the **75-track B53 Elé. 1615** adapter for working on the computer connector (**cable K**) and the **28-track Elé. 1616** adapter for working on the seat (**cable C**).

VELSATIS

CO ***CC***	***NOTES***	None

Lock the computer using the diagnostic tool (VP006). Switch off the ignition and check that the ignition module of the driver's lap belt pretensioner is correctly connected.
Disconnect the ignition module of the driver's lap belt pretensioner and connect a dummy ignition module to the ignition module connector. Switch on the ignition and carry out a check using the diagnostic tool. Replace the driver's lap belt pretensioner if the fault is stored (the fault is no longer declared present).
Disconnect the computer connector and fit the **75-track adapter B53**. The Clip or XRBAG tools MUST be used for checking resistance on the **wire marked K** on the adapter. If the value obtained is correct, check the connections of the **75-track (tracks 28 and 53)** connector.
Remove the driver's seat and check the wiring on the **28-track** connector under the seat (**tracks 14 and 28**). Repair if necessary. Fit the **28-track** test adapter to the seat (**point C1**). The CLIP or XRBAG tool must be used to measure the resistance in adapter **cable C**. If the value obtained is incorrect, the wiring is faulty between the **28-track** connector and the driver's lap belt pretensioner (**C1 and C3**). Replace the wiring if necessary. See next page.

AFTER REPAIR	Reconnect the computer and the pretensioner igniter, then switch on the ignition again. Clear the computer fault memory then switch off the ignition. Carry out the check again using the diagnostic tool and, if there is no fault, unlock the computer. Destroy the pretensioner if it has been replaced (tool **Elé. 1287**).

GETtheMANUALS.org

DF080 **CONTINUED**	

VELSATIS

If the fault persists, the wiring is faulty between the **75-track** computer connector and the driver's seat (**C0/C1**).
Replace the wiring if necessary.

CC.1 ***CC.0***	***NOTES***	None

Lock the computer using the diagnostic tool (VP006).
Disconnect the computer connector and fit the **75-track adapter B53**.
The CLIP or XRBAG tools must be used for measuring the insulation appropriate to the type of fault on the **cable marked K** on the adapter.
If the value obtained is correct, check the connections of the **75-track (tracks 28 and 53)** connector.

If the value is not correct, remove the driver's seat and check the wiring on the **28-track** connector under the seat (**tracks 14 and 28**).
Repair if necessary.
Fit the **28-track** test adapter to the seat (**point C1**).
The CLIP or XRBAG tool must be used to correctly measure the insulation for the type of fault in adapter **cable C**.
If the value obtained is incorrect, the wiring is faulty between the **28-track** connector and the driver's lap belt pretensioner (**C1 and C3**). Replace the wiring if necessary.
If the value obtained is correct, the wiring is faulty between the **75-track** computer connector and the driver's seat (**C0/C1**).
Replace the wiring if necessary.

AFTER REPAIR	Reconnect the computer and the pretensioner igniter, then switch on the ignition again. Clear the computer fault memory then switch off the ignition. Carry out the check again using the diagnostic tool and, if there is no fault, unlock the computer. Destroy the pretensioner if it has been replaced (tool **Elé. 1287**).

GETtheMANUALS.org

DF080 **PRESENT**	DRIVER'S LAP BELT PRETENSIONER CIRCUIT CC : Short circuit CO : Open circuit CC.1 : Short circuit to + 12 V CC.0 : Short circuit to earth

NOTES	**Priorities when dealing with a number of faults:** If fault **DF080** is present with at least one of **DF065, DF077, DF210**, begin the fault finding by checking the **28-track** under-seat connector.
	Special notes: Never carry out measuring operations on trigger lines using any tool other than CLIP or XRBAG. Use the **75-track B53 Elé. 1615** adapter for working on the computer connector (**cable K**) and the **28 track Elé. 1616** adapter for working on the seat (**cable C**).

ESPACE IV

CO ***CC***	***NOTES***	None

Lock the computer using the diagnostic tool (VP006).
Switch off the ignition and check that the ignition module of the driver's lap belt pretensioner is correctly connected.

Disconnect the ignition module of the driver's lap belt pretensioner and connect a dummy ignition module to the ignition module connector.
Switch on the ignition and carry out a check using the diagnostic tool.
Replace the driver's lap belt pretensioner if the fault is stored (the fault is no longer declared present).

Disconnect the computer connector and fit the **75-track B53 adapter**.
The Clip or XRBAG tools MUST be used for checking resistance on the **wire marked K** on the adapter.
If the value obtained is correct, check the connections of the **75-track (tracks 28 and 53)** connector.

Remove the driver's seat and check the wiring on the **28-track** connector under the seat (**tracks 14 and 28**). Repair if necessary.
Fit the **28-track** test adapter to the seat (**point C1**).
The CLIP or XRBAG tool must be used to measure the resistance in adapter **cable C**.
If the value obtained is incorrect, the wiring is faulty between the **28-track** connector and the driver's lap belt pretensioner (**C1 and C3**). Replace the wiring if necessary.
See next page.

AFTER REPAIR	Reconnect the computer and the pretensioner igniter, then switch on the ignition again. Clear the computer fault memory then switch off the ignition. Carry out the check again using the diagnostic tool and, if there is no fault, unlock the computer. Destroy the pretensioner if it has been replaced (tool **Elé. 1287**).

GETtheMANUALS.org

DF080 **CONTINUED**	

ESPACE IV

If the fault is still present, the wiring is faulty between the **75-track** computer connector and the driver's seat (**C0/C1**).
Replace the wiring if necessary.

CC.1 ***CC.0***	***NOTES***	None

Lock the computer using the diagnostic tool (VP006).
Disconnect the computer connector and fit the **75-track adapter B53**.
The CLIP or XRBAG tools must be used for measuring the insulation appropriate to the type of fault on **cable K** on the adapter.
If the value obtained is correct, check the connections of the **75-track (tracks 28 and 53)** connector.

If the value is not correct, remove the driver's seat and check the wiring on the **28-track** connector under the seat (**tracks 14 and 28**).
Repair if necessary.
Fit the **28-track** test adapter to the seat (**point C1**).
The CLIP or XRBAG tool must be used to correctly measure the insulation for the type of fault in adapter **cable C**.
If the value obtained is incorrect, the wiring is faulty between the **28-track** connector and the driver's lap belt pretensioner (**C1 and C3**). Replace the wiring if necessary.
If the value obtained is correct, the wiring is faulty between the **75-track** computer connector and the driver's seat (**C0/C1**).
Replace the wiring if necessary.

AFTER REPAIR	Reconnect the computer and the pretensioner igniter, then switch on the ignition again. Clear the computer fault memory then switch off the ignition. Carry out the check again using the diagnostic tool and, if there is no fault, unlock the computer. Destroy the pretensioner if it has been replaced (tool **Elé. 1287**).

GETtheMANUALS.org

DF091 PRESENT	AIRBAG LOCKING SWITCH CIRCUIT CO : Open circuit CC.0 : Short circuit to earth CC.1 : Short circuit to + 12 V 1.DEF: Below minimum threshold 2.DEF: Configuration 3.DEF: Internal electronic fault

NOTES	**Special notes:** Use the **75-track B53 Elé. 1615** adapter when working on the computer connector. Lock the computer using the diagnostic tool.

CO ***CC.0*** ***CC.1*** ***1.DEF***	***NOTES***	None

Check the condition of the computer connections.
Check the condition of the **75-track** connector (locking system, connections, etc.)
Check that the locking switch is correctly connected and check its connections.
Check the continuity and insulation of the connections between:

Bornier B53 **terminal 39** → **Track 3** of the locking switch connector

Bornier B53 **terminal 64** → **Track 6** of the locking switch connector

Replace the locking switch if the fault is still present.

2.DEF	***NOTES***	None

This fault corresponds to an inconsistency between the computer configuration and the vehicle equipment detected by the computer.
The computer detects the presence of the locking switch but the computer is configured **Without**. Change the computer configuration using command **SC005 Configuration of system components**.
Correct configuration: With Passenger airbag locking with key.

AFTER REPAIR	Reconnect the computer and the locking switch, then switch on the ignition. Clear the computer fault memory then switch off the ignition. Carry out the check again using the diagnostic tool and, if there is no fault, unlock the computer.

GETtheMANUALS.org

DF091 **CONTINUED**	

3.DEF	***NOTES***	None

Replace the locking switch.

AFTER REPAIR	Reconnect the computer and the locking switch, then switch on the ignition. Clear the computer fault memory then switch off the ignition. Carry out the check again using the diagnostic tool and, if there is no fault, unlock the computer.

GETtheMANUALS.org

DF092 PRESENT	FRONT SEAT INERTIA REEL LOCKING FUNCTION CO.0 : Open circuit or short circuit to earth CC.1 : Short circuit to + 12 V 1.DEF: Configuration

NOTES	**Special notes:** Never carry out measuring operations on trigger lines using any tool other than CLIP or XRBAG. Use the **75-track B53 Elé. 1615** adapter for working on the computer connector and the **12-track Elé. 1645** adapter for working on the A computer.

CO.0	***NOTES***	This function is only present on the VELSATIS. In the event of CO.0 on the LAGUNA, change the computer configuration (SC005).

Lock the computer, disconnect the connector from the A computer, check its connections and fit **12-track bornier Elé. 1645.**
Ensure that there is **+ After ignition feed** on **track 3** and an **earth** on **track 1**.
Ensure insulation across these two connections.

Check the condition of **track 8** on the A computer connections.
Reconnect the A computer connector.
Disconnect the airbag computer connector and check the condition of its connections. Fit the **75-track B53** adapter.
Check the continuity and insulation of the connection between:

Airbag computer **track 55** ⟶ **Track 8** of the A computer

If the connection is faulty, replace the wiring between the airbag computer and the A computer.

Using **12-track Elé. 1645 bornier**, ensure that **the resistance** of the inertia reels between **tracks 5 and 6** passenger side and **11 and 12** driver's side are approximately **47.5 Ω ± 5**.
Is the resistance correct?

YES	Check the condition of the A computer connection again. Replace the A computer if the fault is still present.

AFTER REPAIR	Reconnect the airbag computer and the A computer, then switch on the ignition. Clear the computer fault memory then switch off the ignition. Carry out the check again using the diagnostic tool and, if there is no fault, unlock the computer.

GETtheMANUALS.org

DF092 **CONTINUED**	

NO	Remove the seat with the incorrect resistance and check the connections of the **28-track** connector under the seat (**tracks 6 and 27**). Fit the **28 track** test adapter on the seat to **point C1**. Measure the resistance of the seat inertia reel between **tracks 6 and 27** of the bornier. * **The resistance** is approximately **47.5 Ω ± 5**: replace the wiring between the A computer and the **28-track** connector under the seat. * **The resistance** is not approximately **47.5 Ω ± 5**: strip the seat and check that the inertia reel wiring harness is correctly connected. If the module is correctly connected, measure the resistance directly on the inertia reel motor. – **The resistance** is not approximately **47.5 Ω ± 5**: replace the seat inertia reel. – **The resistance** is approximately **47.5 Ω ± 5**: replace the module between the **28-track** connector and the seat inertia reel

CC.1	***NOTES***	None

Lock the computer (VP006), disconnect the connector from the **A** computer, check its connections and fit **the 12-track adapter**.
Ensure that there is **+ After ignition feed** on **track 3** and an **earth** on **track 1**.
Ensure insulation across these two connections.

Check the condition of **track 8** on the **A** computer connections.
Disconnect the airbag computer connector and check the condition of its connections. Fit the **75-track B53** adapter.
Check the continuity and insulation of the connection between:

Airbag computer **track 55** ⟶ **Track 8** of A computer

If the connection is faulty, replace the wiring between the airbag computer and the **A** computer.

1.DEF	***NOTES***	None

This fault corresponds to an inconsistency between the computer configuration and the vehicle equipment detected by the computer. The computer detects the presence of a connection with the A computer but the computer is configured without.
Modify the computer configuration using the **SC005 Configuration of system components** command.

AFTER REPAIR	Reconnect the airbag computer and the A computer, then switch on the ignition. Clear the computer fault memory then switch off the ignition. Carry out the check again using the diagnostic tool and, if there is no fault, unlock the computer.

GETtheMANUALS.org

DF094 to DF153 PRESENT OR STORED	COMPUTER FAULT

NOTES	None

Contact the Techline.

AFTER REPAIR	None.

GETtheMANUALS.org

DF179 PRESENT	DRIVER'S FRONT SIDE SENSOR CIRCUIT CC.0 : Short circuit to earth 1.DEF: No communication 2.DEF: Disrupted communication 3.DEF: Faulty sensor 4.DEF: Values beyond tolerance

NOTES	**Special notes:** Use the **75-track B53 Elé. 1615** adapter when working on the computer connector.

CC.0 ***1.DEF*** ***2.DEF***	***NOTES***	None

Lock the computer using the diagnostic tool (VP006).
Check that the driver's front side sensor is connected correctly and check its wiring.
Check the condition of the computer connections (**tracks 45 and 70**).
Check the condition of the **75-track** connector (locking system, connections, etc.).
Check the continuity and insulation of the connections between:

Bornier B53 **terminal 70** ⟶ **track 1** sensor connector

Bornier B53 **terminal 45** ⟶ **track 2** sensor connector

3.DEF ***4.DEF***	***NOTES***	None

Replace the driver's front side sensor.

AFTER REPAIR	Reconnect the computer and the driver's front side sensor then switch on the ignition again. Clear the computer memory then switch off the ignition. Carry out the check again using the diagnostic tool and, if there are no faults, unlock the computer.

GETtheMANUALS.org

DF180 PRESENT	PASSENGER FRONT SIDE SENSOR CIRCUIT CC.0 : Short circuit to earth 1.DEF: No communication 2.DEF: Disrupted communication 3.DEF: Faulty sensor 4.DEF: Values beyond tolerance

NOTES	**Special notes:** Use the **75-track B53 Elé. 1615** adapter when working on the computer connector.

CC.0 ***1.DEF*** ***2.DEF***	***NOTES***	None

Lock the computer using the diagnostic tool (VP006).
Check that the passenger front side sensor is connected correctly and check its wiring.
Check the condition of the connections on the computer (**tracks 46 and 71**).
Check the condition of the **75-track** connector (locking system, connections, etc.).
Check the continuity and insulation of the connections between:

Bornier B53 **terminal 71** ⟶ **track 1** sensor connector

Bornier B53 **terminal 46** ⟶ **track 2** sensor connector

3.DEF ***4.DEF***	***NOTES***	None

Replace the passenger front side sensor.

AFTER REPAIR	Reconnect the computer and the passenger's side sensor then switch on the ignition again. Clear the computer fault memory then switch off the ignition. Carry out the check again using the diagnostic tool and, if there is no fault, unlock the computer.

GETtheMANUALS.org

DF187 PRESENT	TRIGGER LINES CONFIGURATION

NOTES	None

This fault corresponds to an inconsistency between the computer configuration and the vehicle equipment detected by the computer. The computer has detected the presence of a component additional to its configuration.

Modify the computer configuration using the command **SC008 Configuration of ignition modules**.
(Note: configuration of the ignition modules covers 2 screens).

AFTER REPAIR	Clear the computer fault memory. Switch off the ignition. Carry out the check again using the diagnostic tool and, if there is no fault, unlock the computer.

GETtheMANUALS.org

DF193 STORED	PASSENGER AIRBAG LOCKING CHANGE OF STATUS

Vdiag 24, 28

NOTES	**Special notes:** The vehicle user has **10 seconds** after switching on the **+ after ignition feed** to inhibit the passenger airbag via the switch. After this time, the computer will store this fault and light up the instrument panel warning light. Switching the ignition off and on again will block this fault.

Clear the computer fault memory. Switch off the ignition, and wait a few seconds.
Switch the ignition on again and check that the fault is gone.

AFTER REPAIR	Clear the computer fault memory. Switch off the ignition. Carry out the check again using the diagnostic tool and, if there is no fault, unlock the computer.

GETtheMANUALS.org

DF193 **STORED**	PASSENGER AIRBAG LOCKING CHANGE OF STATUS

Vdiag 2C, 2D

NOTES	**Special notes:** the computer stores this fault and switches on the instrument panel warning light if the key status changes position (by means of the user's action or a problem with the switch) when the vehicle is moving at over **4 mph (7 km/h)**.

Clear the computer fault memory.
Switch the ignition on again and check that the fault is gone.

AFTER REPAIR	Clear the computer fault memory. Switch off the ignition. Carry out the check again using the diagnostic tool and, if there is no fault, unlock the computer.

GETtheMANUALS.org

DF194 PRESENT	COMPUTER TO BE REPLACED FOLLOWING IMPACT

NOTES	None

To carry out the necessary repairs:
– Run command **SC004 Read impact context** to **replace all components actuated** at the moment of impact (see **Replacement of components**).

AFTER REPAIR	None.

GETtheMANUALS.org

DF206 **PRESENT**	FRONT CURTAIN AIRBAG CIRCUIT, PASSENGER'S SIDE CC : Short circuit CO : Open circuit CC.1 : Short circuit to + 12 V CC.0 : Short circuit to earth

NOTES	**Special notes:** Never carry out measuring operations on trigger lines using any tool other than Clip or XRBAG. Use the **75-track B53 Elé. 1615 (cable T)** adapter for working on the computer connector.

CO ***CC***	***NOTES***	**Special notes:** Correct the trigger line configuration if the vehicle is not fitted with passenger front curtain airbags.

Lock the computer using the diagnostic tool (VP006). Switch off the ignition and check that the ignition module of the passenger side front curtain airbag is correctly connected.
Disconnect the ignition module from the passenger side front curtain airbag and connect a dummy ignition module to the ignition module connector. Switch on the ignition and carry out a check using the diagnostic tool. Replace the passenger side front curtain airbag if the fault becomes stored (fault no longer declared present).
Disconnect the computer connector and check the wiring on the connector **tracks 44 and 69**. Fit the **75-track B53 Elé. 1615** test adapter. The CLIP or XRBAG tools must be used for checking resistance of **cable T** of the adapter. If the value indicated is incorrect, the wiring between the computer connector and passenger front curtain airbag (**C0/C3**) is faulty. Replace the wiring if necessary.

AFTER REPAIR	Reconnect the computer and the ignition module of the passenger side front curtain airbag module then switch the ignition back on. Clear the computer fault memory then switch off the ignition. Carry out the check again using the diagnostic tool and, if there is no fault, unlock the computer. Destroy the passenger side front curtain airbag module if it has been replaced (tool **Elé. 1287**).

GETtheMANUALS.org

DF206 **CONTINUED**	

CC.1 ***CC.0***	***NOTES***	None

Lock the computer using the diagnostic tool (VP006). Switch off the ignition and check that the ignition module of the passenger side front curtain airbag is correctly connected.
Disconnect the ignition module from the passenger side front curtain airbag and connect a dummy ignition module to the ignition module connector. Switch on the ignition and carry out a check using the diagnostic tool. Replace the passenger side front curtain airbag if the fault becomes stored (fault no longer declared present).
Disconnect the computer connector and check the wiring on the connector **tracks 44 and 69**. Fit the **75-track** B53 **Elé. 1615** test adapter. The CLIP or XRBAG tools must be used for measuring the insulation appropriately for the type of fault on **cable T** of the adapter. If the value indicated is incorrect, the wiring between the computer connector and passenger front curtain airbag (**C0/C3**) is faulty. Replace the wiring if necessary.

AFTER REPAIR	Reconnect the computer and the ignition module of the passenger side front curtain airbag module then switch the ignition back on. Clear the computer fault memory then switch off the ignition. Carry out the check again using the diagnostic tool and, if there is no fault, unlock the computer. Destroy the passenger side front curtain airbag module if it has been replaced (tool **Elé. 1287**).

GETtheMANUALS.org

DF207 **PRESENT**	DRIVER`S SIDE FRONT CURTAIN AIRBAG CC : Short circuit CO : Open circuit CC.1 : Short circuit to + 12 V CC.0 : Short circuit to earth

NOTES	**Special notes:** Never carry out measuring operations on trigger lines using any tool other than CLIP or XRBAG. Use the **75 track B53 Elé. 1615 (cable S)** adapter for working on the computer connector.

CO ***CC***	***NOTES***	**Special notes:** Correct the trigger line configuration if the vehicle is not fitted with driver's side front curtain airbags.

Lock the computer using the diagnostic tool (VP006). Switch off the ignition and check that the ignition module of the driver's side front curtain airbag is correctly connected.
Disconnect the ignition module from the driver's side curtain airbag and connect a dummy ignition module to the ignition module connector. Switch on the ignition and carry out a check using the diagnostic tool. Replace the driver's side front curtain airbag if the fault becomes stored (fault no longer declared present).
Disconnect the computer connector and check the wiring on the connector (**tracks 43 and 68**). Fit the **75-track B53 Elé. 1615** test adapter. The CLIP or XRBAG tools must be used for checking resistance on **cable S** on the adapter. If the value indicated is incorrect, the wiring between the computer connector and driver's side front curtain airbag (**C0/C3**) is faulty. Replace the wiring if necessary.

AFTER REPAIR	Reconnect the computer and the ignition module of the driver's side front curtain airbag module then switch the ignition back on. Clear the computer fault memory then switch off the ignition. Carry out the check again using the diagnostic tool and, if there is no fault, unlock the computer. Destroy the driver's side front curtain airbag module if it has been replaced (tool **Elé. 1287**).

GETtheMANUALS.org

DF207 **CONTINUED**	

CC.1 ***CC.0***	***NOTES***	None

Lock the computer using the diagnostic tool (VP006). Switch off the ignition and check that the ignition module of the driver's side front curtain airbag is correctly connected.
Disconnect the ignition module from the driver's side front curtain airbag and connect a dummy ignition module to the ignition module connector. Switch on the ignition and carry out a check using the diagnostic tool. Replace the driver's side front curtain airbag if the fault becomes stored (fault no longer declared present).
Disconnect the computer connector and check the wiring on the connector (**tracks 43 and 68**). Fit the **75-track B53 Elé. 1615** test adapter. The CLIP or XRBAG tools must be used for measuring the insulation appropriately for the type of fault on **cable S** on the adapter. If the value indicated is incorrect, the wiring between the computer connector and driver's side front curtain airbag (**C0/C3**) is faulty. Replace the wiring if necessary.

AFTER REPAIR	Reconnect the computer and the ignition module of the driver's-side front curtain airbag module then switch the ignition back on. Clear the computer fault memory then switch off the ignition. Carry out the check again using the diagnostic tool and, if there is no fault, unlock the computer. Destroy the driver's side front curtain airbag module if it has been replaced (tool **Elé. 1287**).

GETtheMANUALS.org

DF208 **PRESENT**	DRIVER'S SIDE REAR CURTAIN AIRBAG CIRCUIT CC : Short circuit CO : Open circuit CC.1 : Short circuit to + 12 V CC.0 : Short circuit to earth

NOTES	**Special notes:** Never carry out measuring operations on trigger lines using any tool other than CLIP or XRBAG. Use the **75 track B53 Elé. 1615 (cable U)** adapter for working on the computer connector.

CO ***CC***	***NOTES***	**Special notes:** Correct the trigger line configuration if the vehicle is not fitted with driver's side rear curtain airbags.

Lock the computer using the diagnostic tool (VP006). Switch off the ignition and check that the ignition module of the driver's side rear curtain airbag is correctly connected.
Disconnect the ignition module from the driver's rear curtain airbag and connect a dummy ignition module to the ignition module connector. Switch on the ignition and carry out a check using the diagnostic tool. Replace the driver's side rear curtain airbag if the fault becomes stored (fault no longer declared present).
Disconnect the computer and check the wiring on the connector **tracks 47 and 72**. Fit the **75-track B53 Elé. 1615** test adapter. The CLIP or XRBAG must be used to measure the resistance in adapter **cable U**. If the value indicated is incorrect, the wiring between the computer connector and driver's side rear curtain airbag (**C0/C3**) is faulty. Replace the wiring if necessary.

AFTER REPAIR	Reconnect the computer and the ignition module of the driver's side rear curtain airbag module then switch the ignition back on. Clear the computer fault memory then switch off the ignition. Carry out the check again using the diagnostic tool and, if there is no fault, unlock the computer. Destroy the driver's side rear curtain airbag module if it has been replaced (tool **Elé. 1287**).

GETtheMANUALS.org

DF208 **CONTINUED**	

CC.1 ***CC.0***	***NOTES***	None

Lock the computer using the diagnostic tool (VP006). Switch off the ignition and check that the ignition module of the driver's side rear curtain airbag is correctly connected.
Disconnect the ignition module from the driver's rear curtain airbag and connect a dummy ignition module to the ignition module connector. Switch on the ignition and carry out a check using the diagnostic tool. Replace the driver's side rear curtain airbag if the fault becomes stored (fault no longer declared present).
Disconnect the computer and check the wiring on the connector **tracks 47 and 72**. Fit the **75-track B53 Elé. 1615** test adapter. The CLIP or XRBAG tool must be used to correctly measure the insulation for the type of fault on **cable U** of the adapter. If the value indicated is incorrect, the wiring between the computer connector and driver's side rear curtain airbag (**C0/C3**) is faulty. Replace the wiring if necessary.

AFTER REPAIR	Reconnect the computer and the ignition module of the driver's side rear curtain airbag module then switch the ignition back on. Clear the computer fault memory then switch off the ignition. Carry out the check again using the diagnostic tool and, if there is no fault, unlock the computer. Destroy the driver's side rear curtain airbag module if it has been replaced (tool **Elé. 1287**).

GETtheMANUALS.org

DF209 **PRESENT**	PASSENGER SIDE REAR CURTAIN AIRBAG CIRCUIT CC : Short circuit CO : Open circuit CC.1 : Short circuit to + 12 V CC.0 : Short circuit to earth

NOTES	**Special notes:** Never carry out any procedures on trigger lines using any tool other than CLIP, NXR or XRBAG. Use the **75 track B53 Elé. 1615 (cable V)** adapter for working on the computer connector.

CO ***CC***	***NOTES***	**Special notes:** Correct the trigger line configuration if the vehicle is not fitted with passenger side rear curtain airbags.

Lock the computer using the diagnostic tool (VP006). Switch off the ignition and check that the ignition module of the passenger side rear curtain airbag is correctly connected.
Disconnect the ignition module from the passenger side rear curtain airbag and connect a dummy ignition module to the ignition module connector. Switch on the ignition and carry out a check using the diagnostic tool. Replace the passenger side rear curtain airbag if the fault becomes stored (fault no longer declared present).
Disconnect the computer and check the wiring on the connector **tracks 48 and 73**. Fit the **75-track B53 Elé. 1615** test adapter. The CLIP or XRBAG must be used to measure the resistance on **cable V** of the adapter. If the value indicated is incorrect, the wiring between the computer connector and passenger side rear curtain airbag (**C0/C3**) is faulty. Replace the wiring if necessary.

AFTER REPAIR	Reconnect the computer and the ignition module of the passenger side rear curtain airbag module then switch the ignition back on. Clear the computer fault memory then switch off the ignition. Carry out the check again using the diagnostic tool and, if there is no fault, unlock the computer. Destroy the passenger's side rear curtain airbag module if it has been replaced (tool **Elé. 1287**).

GETtheMANUALS.org

DF209 **CONTINUED**	

CC.1 ***CC.0***	***NOTES***	None

Lock the computer using the diagnostic tool (VP006). Switch off the ignition and check that the ignition module of the passenger side rear curtain airbag is correctly connected.
Disconnect the ignition module from the passenger side rear curtain airbag and connect a dummy ignition module to the ignition module connector. Switch on the ignition and carry out a check using the diagnostic tool. Replace the passenger side rear curtain airbag if the fault becomes stored (fault no longer declared present).
Disconnect the computer and check the wiring on the connector **tracks 48 and 73**. Fit the **75-track B53 Elé. 1615** test adapter. The CLIP or XRBAG tool must be used to correctly measure the insulation for the type of fault on **cable V** of the adapter. If the value indicated is incorrect, the wiring between the computer connector and passenger side rear curtain airbag (**C0/C3**) is faulty. Replace the wiring if necessary.

AFTER REPAIR	Reconnect the computer and the ignition module of the passenger side rear curtain airbag module then switch the ignition back on. Clear the computer fault memory then switch off the ignition. Carry out the check again using the diagnostic tool and, if there is no fault, unlock the computer. Destroy the passenger's side rear curtain airbag module if it has been replaced (tool **Elé. 1287**).

GETtheMANUALS.org

DF210 PRESENT	FRONT BUCKLE PRETENSIONERS CIRCUIT CC : Short circuit CO : Open circuit CC.1 : Short circuit to + 12 V CC.0 : Short circuit to earth

NOTES	**Special notes:** the front buckle pretensioners are wired in series. Never carry out measuring on the trigger lines with any tool other than CLIP or XRBAG. Use the **75-track B53 Elé. 1615 (cable B or C)** adapter for working on the computer connector and the **28 track Elé. 1616** adapter for working on the seat (**cable A**).

CO ***CC***	***NOTES***	None

Lock the computer using the diagnostic tool (VP006). Switch off the ignition and check that the ignition module of the driver's seat buckle pretensioner is correctly connected. Disconnect the ignition module of the pretensioner and connect a dummy ignition module to the ignition module connector. Switch on the ignition and carry out a check using the diagnostic tool. Replace the driver's seat buckle pretensioner if the fault becomes stored (fault no longer declared present).
Switch off the ignition and check that the ignition module of the passenger seat buckle pretensioner is correctly connected. Disconnect the ignition module of the pretensioner and connect a dummy ignition module to the ignition module connector. Switch on the ignition and carry out a check using the diagnostic tool. Replace the passenger seat buckle pretensioner ignition module if the fault becomes stored (fault no longer declared present).'
Disconnect the computer and check the connections of the connector (**tracks 2, 3, 26 and 51**). Fit the **75-track B53 Elé. 1615** test adapter. The CLIP or XRBAG must be used to measure the resistance in adapter **cable B**. If the value obtained is incorrect, the wiring is faulty between the computer and the driver's seat buckle pretensioner ignition module (**C0/C3**).
The CLIP or XRBAG tool must be used to measure the resistance in adapter **cable C**. If the value obtained is incorrect, the wiring is faulty between the computer and the passenger seat buckle pretensioner (**C0/C3**).

AFTER REPAIR	Reconnect the computer and the buckle pretensioners then switch on the ignition again. Clear the computer fault memory then switch off the ignition. Carry out the check again using the diagnostic tool and, if there is no fault, unlock the computer. Destroy any pretensioners that have been replaced (tool **Elé. 1287**).

GETtheMANUALS.org

DF210 **CONTINUED 1**	

Remove the seat displaying the fault and check the **28-track** connector wiring under the seat (**tracks 8 and 22**).
Repair if necessary.
Fit the **28-track Elé. 1616** test adapter on the seat (**point C1**).
The CLIP or XRBAG tool must be used to measure the resistance in **cable A**.
Is the value obtained correct?

NO	Check the seat connector connections again (**tracks 8 and 22**). If the fault is still present, the wiring is faulty between the **28-track** seat connector and the buckle pretensioner of the faulty seat (**C1/C3**).
YES	Check the seat connector wiring again (**tracks 8 and 22**) on the passenger compartment wiring side as well as that of the **75-track connector (tracks 2 and 26, driver's seat or 51 and 3, passenger seat)**.
	If the fault persists, the wiring is faulty between the computer and the seat displaying the fault (**C0/C1**). Replace the wiring if necessary.

AFTER REPAIR	Reconnect the computer and the buckle pretensioners then switch on the ignition again. Clear the computer fault memory then switch off the ignition. Carry out the check again using the diagnostic tool and, if there is no fault, unlock the computer. Destroy any pretensioners that have been replaced (tool **Elé. 1287**).

GETtheMANUALS.org

DF210 **CONTINUED 2**	

CC.1 ***CC.0***	***NOTES***	None

Lock the computer using the diagnostic tool (VP006). Switch off the ignition and check that the ignition module of the driver's seat buckle pretensioner is correctly connected. Disconnect the ignition module of the pretensioner and connect a dummy ignition module to the ignition module connector. Switch on the ignition and carry out a check using the diagnostic tool. Replace the driver's seat buckle pretensioner if the fault becomes stored (fault no longer declared present).
Switch off the ignition and check that the ignition module of the passenger's seat buckle pretensioner is correctly connected. Disconnect the ignition module of the pretensioner and connect a dummy ignition module to the ignition module connector. Switch on the ignition and carry out a check using the diagnostic tool. Replace the passenger seat buckle pretensioner ignition module if the fault becomes stored (fault no longer declared present).
Disconnect the computer and check the connections of the connector (**tracks 2, 3, 26 and 51**). Fit the **75-track B53 Elé. 1615** test adapter. The CLIP or XRBAG tool must be used to correctly measure the insulation for the type of fault in adapter **cable B**. If the value obtained is incorrect, the wiring is faulty between the computer and the driver's seat buckle pretensioner ignition module (**C0/C3**).
The CLIP or XRBAG tool must be used to correctly measure the insulation for the type of fault in adapter **cable C**. If the value obtained is incorrect, the wiring is faulty between the computer and the passenger seat buckle pretensioner (**C0/C3**).

AFTER REPAIR	Reconnect the computer and the buckle pretensioners then switch on the ignition again. Clear the computer fault memory then switch off the ignition. Carry out the check again using the diagnostic tool and, if there is no fault, unlock the computer. Destroy any pretensioners that have been replaced (tool **Elé. 1287**).

GETtheMANUALS.org

DF210 **CONTINUED 3**	

Remove the seat displaying the fault and check the **28-track** connector wiring under the seat (**tracks 8 and 22**).
Repair if necessary.
Fit the **28-track Elé. 1616** test adapter on the seat (**point C1**).
Only use the CLIP or XRBAG tools to measure the insulation appropriately for the type of fault on **cable A**.
Is the value obtained correct?

NO	Check the seat connector connections again (**tracks 8 and 22**). If the fault persists, the wiring is faulty between the **28-track** seat connector and the buckle pretensioner of the faulty seat (**C1/C3**).
YES	Check the seat connector wiring again (**tracks 8 and 22**) on the passenger compartment wiring side as well as that of the **75-track connector (tracks 2 and 26, driver's seat or 51 and 3, passenger seat)**.
	If the fault persists, the wiring is faulty between the computer and the seat displaying the fault (**C0/C1**). Replace the wiring if necessary.

AFTER REPAIR	Reconnect the computer and the buckle pretensioners then switch on the ignition again. Clear the computer fault memory then switch off the ignition. Carry out the check again using the diagnostic tool and, if there is no fault, unlock the computer. Destroy any pretensioners that have been replaced (tool **Elé. 1287**).

GETtheMANUALS.org

DF242 PRESENT	LEFT-HAND DRIVE/RIGHT-HAND DRIVE CONFIGURATION

NOTES	None

This fault occurs because left-hand/right-hand drive has not been configured.
Configure the computer using command **CF291 "Driving side"**.
Read the configuration of the driving side using command **LC088 "Driving side"** under the **"Read configuration"** heading.

AFTER REPAIR	None.

GETtheMANUALS.org

NOTES	Only check conformity after a complete check using the diagnostic tool.

Order	Function	Parameter or status checked or action	Display and notes	Fault finding
1	Diagnostic tool dialogue	-	Airbag ACU 3	**ALP 1**
2	Computer conformity	Configuration reading **LC034: Vehicle type**	**LAGUNA II** **LAGUNA II ph II** **VELSATIS** **VELSATIS ph II** **ESPACE IV**	**NONE**
3	Computer configuration	Use the following commands: **SC008: Configuration of ignition modules** **SC005: System component configuration**	Ensure that the computer configuration defined in the **Current** column corresponds to the vehicle equipment.	**NONE**
		CF291: Driving side	Ensure that the computer configuration defined in configuration reading **LC088** corresponds to the vehicle type.	
4	Operation of the warning light Computer initialisation check	Ignition on	Warning light comes on for **3 seconds** when the ignition is switched on	**In the even of any problems, apply the interpretation of DF010 Fault warning light circuit.**

GETtheMANUALS.org

Tool status	Diagnostic tool title
ET072	Passenger airbag status indicator light commanded
ET073	Computer locked by tool
ET074	Fault warning light activated
ET075	Fault warning light activated as a result of impact
ET079	Faulty front inertia reel locking
ET083	Driver's seat position
ET084	All ignition modules ignited
ET085	Locking switch.
ET102	Passenger airbag locked
ET166	Passenger seatbelt contact (Vdiag 2C)
ET167	Passenger presence detected (Vdiag 2C)

Trigger line or sensor impedance is equal to **99.9 Ω** when the component is disconnected or not controlled by the computer.

GETtheMANUALS.org

Tool parameter	Diagnostic tool title
PR002	Vehicle type
PR003	Number of impacts
PR086	Number of clearances
PR100	Front inertia reel locking line voltage
PR104	Driver's seat sensor impedance
PR105	Impedance line 1 (**Driver lap belt pretensioner circuit**)
PR106	Impedance line 2 (**Passenger lap belt pretensioner circuit**)
PR107	Impedance line 3 (**Driver's side buckle pretensioner circuit**)
PR108	Impedance line 4 (**Passenger side buckle pretensioner circuit**)
PR109	Impedance line 5 (**Passenger frontal airbag circuit 1**)
PR110	Impedance line 6 (**Passenger frontal airbag circuit 2**)
PR111	Impedance line 7 (**Driver's frontal airbag circuit 1**)
PR112	Impedance line 8 (**Driver's frontal airbag circuit 2**)
PR113	Impedance line 9 (**Driver's side curtain side airbag circuit**)
PR114	Impedance line 10 (**Passenger's side curtain side airbag circuit**)
PR115	Impedance line 11 (**Driver's chest front side airbag circuit**)
PR116	Impedance line 12 (**Passenger chest front side airbag circuit**)
PR117	Impedance line 13 (**Driver's rear chest level side airbag circuit**)
PR118	Impedance line 14 (**Passenger side rear chest level side airbag circuit**)
PR122	Locking sensor circuit impedance

Trigger line or sensor impedance is equal to **99.9 Ω** when the component is disconnected or not controlled by the computer.

GETtheMANUALS.org

Tool status	Diagnostic tool title
ET072	Passenger airbag status indicator light commanded
ET073	Computer locked by tool
ET074	Fault warning light activated
ET075	Fault warning light activated as a result of impact
ET083	Driver's seat position
ET084	All ignition modules ignited
ET085	Locking switch.
ET102	Passenger airbag locked
ET166	Passenger seatbelt contact (Vdiag 2D)
ET167	Passenger presence detected (Vdiag 2D)

Trigger line or sensor impedance is equal to **99.9 Ω** when the component is disconnected or not controlled by the computer.

GETtheMANUALS.org

Tool parameter	Diagnostic tool title
PR002	Vehicle type
PR003	Number of impacts
PR086	Number of clearances
PR104	Driver's seat sensor impedance
PR105	Impedance line 1 (**Driver's lap belt pretensioner circuit**)
PR106	Impedance line 2 (**Passenger lap belt pretensioner circuit**)
PR107	Impedance line 3 (**Front buckle pretensioners circuit**)
PR109	Impedance line 5 (**Passenger frontal airbag circuit 1**)
PR110	Impedance line 6 (**Passenger frontal airbag circuit 2**)
PR111	Impedance line 7 (**Driver's frontal airbag circuit 1**)
PR112	Impedance line 8 (**Driver's frontal airbag circuit 2**)
PR113	Impedance line 9 (**Front curtain airbag circuit, driver's side**)
PR114	Impedance line 10 (**Front curtain airbag circuit, passenger's side**)
PR115	Impedance line 11 (**Driver's front side chest level airbag circuit**)
PR116	Impedance line 12 (**Passenger front side chest level airbag circuit**)
PR117	Impedance line 13 (**Driver's rear chest level side airbag circuit**)
PR118	Impedance line 14 (**Passenger's rear chest level side airbag circuit**)
PR119	Impedance line 15 (**Rear curtain airbag circuit, driver's side**)
PR120	Impedance line 16 (**Rear curtain airbag circuit, passenger's side**)
PR122	Locking sensor circuit impedance

Trigger line or sensor impedance is equal to **99.9 Ω** when the component is disconnected or not controlled by the computer.

GETtheMANUALS.org

ALP1	ABSENCE OF DIALOGUE WITH THE AIRBAG COMPUTER

NOTES	**Special note: See "Introduction, Procedure for Vdiag 2C, 2D" to enable forced + after ignition feed to run fault finding on a computer.**

Try to establish dialogue with a computer on another vehicle to make sure that the diagnostic tool is not faulty.
If the tool is not causing the fault and dialogue cannot be established with any other computer on the same vehicle, it may be that a faulty computer is disrupting fault finding line **K**.
Proceed by successive disconnections to locate this computer.
Check the battery voltage and perform the operations necessary to obtain the correct voltage (**10.5 V < battery voltage < 16 V**).

Check the presence and condition of the airbag computer supply fuse.
Check that the computer connector is properly connected and check the condition of its connections.
Check that the supply to the computer is correct:
- Disconnect the airbag computer and fit the **50 track adapter B53 (cable 1)**.
- Check and ensure the presence of **+ after ignition feed** between the terminals marked **earth** and **+ after ignition feed**.

Check that the supply to the diagnostic socket is correct:
- **+ before ignition feed** on **track 16**.
- **+ after ignition feed** on **track 1**.
- **Earth** on **tracks 4 and 5**.

Check the continuity and insulation of the lines of the diagnostic socket/airbag computer connection:
- Between the terminal marked **K** and **track 7** of the diagnostic socket.

If dialogue has still not been established after these various checks, contact the Techline.

AFTER REPAIR	When communication is established, deal with any faults indicated.